AUTHENTICATED
U.S. GOVERNMENT
INFORMATION
GPO

Federal Register

1–31–02 Thursday
Vol. 67 No. 21 Jan. 31, 2002
Pages 4649–4868

The **FEDERAL REGISTER** is published daily, Monday through Friday, except official holidays, by the Office of the Federal Register, National Archives and Records Administration, Washington, DC 20408, under the Federal Register Act (44 U.S.C. Ch. 15) and the regulations of the Administrative Committee of the Federal Register (1 CFR Ch. I). The Superintendent of Documents, U.S. Government Printing Office, Washington, DC 20402 is the exclusive distributor of the official edition.

The **Federal Register** provides a uniform system for making available to the public regulations and legal notices issued by Federal agencies. These include Presidential proclamations and Executive Orders, Federal agency documents having general applicability and legal effect, documents required to be published by act of Congress, and other Federal agency documents of public interest.

Documents are on file for public inspection in the Office of the Federal Register the day before they are published, unless the issuing agency requests earlier filing. For a list of documents currently on file for public inspection, see http://www.nara.gov/fedreg.

The seal of the National Archives and Records Administration authenticates the Federal Register as the official serial publication established under the Federal Register Act. Under 44 U.S.C. 1507, the contents of the **Federal Register** shall be judicially noticed.

The **Federal Register** is published in paper and on 24x microfiche. It is also available online at no charge as one of the databases on GPO Access, a service of the U.S. Government Printing Office.

The online edition of the **Federal Register** is issued under the authority of the Administrative Committee of the Federal Register as the official legal equivalent of the paper and microfiche editions (44 U.S.C. 4101 and 1 CFR 5.10). It is updated by 6 a.m. each day the **Federal Register** is published and it includes both text and graphics from Volume 59, Number 1 (January 2, 1994) forward.

GPO Access users can choose to retrieve online **Federal Register** documents as TEXT (ASCII text, graphics omitted), PDF (Adobe Portable Document Format, including full text and all graphics), or SUMMARY (abbreviated text) files. Users should carefully check retrieved material to ensure that documents were properly downloaded.

On the World Wide Web, connect to the **Federal Register** at http://www.access.gpo.gov/nara. Those without World Wide Web access can also connect with a local WAIS client, by Telnet to swais.access.gpo.gov, or by dialing (202) 512–1661 with a computer and modem. When using Telnet or modem, type swais, then log in as guest with no password.

For more information about GPO Access, contact the GPO Access User Support Team by E-mail at gpoaccess@gpo.gov; by fax at (202) 512–1262; or call (202) 512–1530 or 1–888–293–6498 (toll free) between 7 a.m. and 5 p.m. Eastern time, Monday–Friday, except Federal holidays.

The annual subscription price for the **Federal Register** paper edition is $699, or $764 for a combined **Federal Register, Federal Register** Index and List of CFR Sections Affected (LSA) subscription; the microfiche edition of the **Federal Register** including the **Federal Register** Index and LSA is $264. Six month subscriptions are available for one-half the annual rate. The charge for individual copies in paper form is $10.00 for each issue, or $10.00 for each group of pages as actually bound; or $2.00 for each issue in microfiche form. All prices include regular domestic postage and handling. International customers please add 25% for foreign handling. Remit check or money order, made payable to the Superintendent of Documents, or charge to your GPO Deposit Account, VISA, MasterCard or Discover. Mail to: New Orders, Superintendent of Documents, P.O. Box 371954, Pittsburgh, PA 15250–7954.

There are no restrictions on the republication of material appearing in the **Federal Register.**

How To Cite This Publication: Use the volume number and the page number. Example: 67 FR 12345.

SUBSCRIPTIONS AND COPIES

PUBLIC

Subscriptions:

Paper or fiche	**202–512–1800**
Assistance with public subscriptions	**202–512–1806**

General online information **202–512–1530; 1–888–293–6498**

Single copies/back copies:

Paper or fiche	**202–512–1800**
Assistance with public single copies	**1–866–512–1800 (Toll-Free)**

FEDERAL AGENCIES

Subscriptions:

Paper or fiche	**202–523–5243**
Assistance with Federal agency subscriptions	**202–523–5243**

What's NEW!

Federal Register Table of Contents via e-mail

Subscribe to FEDREGTOC, to receive the **Federal Register** Table of Contents in your e-mail every day.

If you get the HTML version, you can click directly to any document in the issue.

To subscribe, go to **http://listserv.access.gpo.gov** and select:

Online mailing list archives
FEDREGTOC-L
Join or leave the list

Then follow the instructions.

Printed on recycled paper.

Contents

Federal Register

Vol. 67, No. 21

Thursday, January 31, 2002

Agency for Toxic Substances and Disease Registry
NOTICES
Superfund program:
Substance-Specific Applied Research Program; status update, 4835–4854

Agriculture Department
See Forest Service
See Natural Resources Conservation Service
See Rural Utilities Service

Civil Rights Commission
NOTICES
Meetings; Sunshine Act, 4701

Coast Guard
RULES
Ports and waterways safety:
Oahu, Maui, Hawaii, and Kauai, HI; security zones, 4656–4658
Ports of Charleston and Georgetown, SC; security zones, 4665–4667
San Diego Bay, CA; security zone, 4658–4665
PROPOSED RULES
Ports and waterways safety:
Ouzinkie Harbor, AK; safety zone, 4692–4694

Commerce Department
See International Trade Administration
See National Oceanic and Atmospheric Administration

Copyright Office, Library of Congress
PROPOSED RULES
Copyright arbitration royalty panel rules and procedures:
Mechanical and digital phonorecord delivery compulsory license, 4694–4695

Employment and Training Administration
NOTICES
Adjustment assistance:
Blue Mountain Products, LLC, 4752
Converse, Inc., 4752
Crown Marking Equipment Co., 4752
CSC Ltd., 4752–4753
DuCoa, L.P., 4753
Eagle Affiliates, 4753–4754
Echo Bay Minerals Co., 4754
Hampton Industries, 4754
Henry Manufacturing, 4754
HMG Intermark Worldwide et al., 4754–4755
Huck Fasteners, 4755–4756
McGinley Mills, Inc., 4756
Spinnaker Coating Maine Inc., 4756–4757
Stanley Furniture Co. et al., 4757–4758
Thomaston Mills, Inc., 4758
Adjustment assistance and NAFTA transitional adjustment assistance:
Agere Systems, 4747–4748
Budd Co., 4748
Georgia Pacific Corp., 4748–4749
Pennsylvania Tool & Gages, Inc., et al., 4749–4751
Sierra Pacific Industries, 4751–4752
NAFTA transitional adjustment assistance:
Akers National Roll, 4758
Armada, Inc., 4758
Denso Sales California, Inc., 4758–4759
King Press Corp., 4759
McGinley Mills, Inc., 4759
Perceptron, Inc., 4759
Wesley Industries, Inc., 4759–4760

Energy Department
See Federal Energy Regulatory Commission

Environmental Protection Agency
RULES
Air pollution control:
State operating permits programs—
District of Columbia; correction, 4673–4674
Air programs:
Fuels and fuel additives—
Compliance baseline modification; CFR correction, 4674
Air quality implementation plans; approval and promulgation; various States:
Alabama, 4668–4669
Ohio, 4669–4673
Water pollution control:
National Pollutant Discharge Elimination System—
Storm water discharges; CFR correction, 4675
PROPOSED RULES
Air quality implementation plans; approval and promulgation; various States:
Ohio, 4695
NOTICES
Pesticide programs:
Risk assessments; availability, etc.—
Lindane, 4714–4716

Federal Aviation Administration
RULES
Airworthiness directives:
Israeli Aircraft Industries, Ltd., 4650–4652
Rolls-Royce, plc, 4652–4654
Short Brothers, 4649–4650
Class E5 airspace, 4655–4656
Class E airspace, 4654–4655
PROPOSED RULES
Airworthiness directives:
Bell, 4685–4689
Raytheon, 4683–4685
Airworthiness standards:
Transport category airplanes—
Powerplant installation requirements; revisions, 4855–4863
Existing regulations review; disposition of comments, 4680–4682
NOTICES
Advisory circulars; availability, etc.:
Transport category airplanes—
Flight test guide for certification, 4774–4775
Agency information collection activities:
Proposed collection; comment request, 4775
Aviation insurance:
Third party war risk liability insurance, 4775–4776

Meetings:
RTCA, Inc., 4776
Passenger facility charges; applications, etc.:
Akron-Canton Regional Airport, OH, 4776
Chicago O'Hare International Airport, IL, 4777

Federal Communications Commission
RULES
Common carrier services:
Commercial mobile radio services—
Spectrum aggregation limits; biennial regulatory review; correction, 4675
Organization, functions, and authority delegations:
Bureau functions; duplicate CFR section removed; CFR correction, 4675
Radio services, special:
Aviation services—
Advanced digital communications accommodation in 117.975-137 MHz frequency band and flight information services implementation in 136-137 MHz frequency band, 4675–4676
NOTICES
International telecommunication services:
Satellite network filings; union charges implementation, 4716–4717
Applications, hearings, determinations, etc.:
Great Western Aviation, Inc., et al., 4716

Federal Energy Regulatory Commission
NOTICES
Electric rate and corporate regulation filings:
PJM Interconnection, L.L.C., et al., 4708–4710
Environmental statements; notice of intent:
Texas Eastern Transmission, L.P., 4711–4712
Hydroelectric applications, 4712–4713
Meetings:
Electricity Market Design and Structure, 4713–4714
Reports and guidance documents; availability, etc.:
California Independent System Operator; operational audit, 4714
Applications, hearings, determinations, etc.:
Cogen Lyondell, Inc., et al., 4706–4707
El Dorado Irrigation District, 4708
Great Northern Paper, Inc., 4707–4708
TPS Dell, LLC, 4707

Federal Maritime Commission
NOTICES
Agreements filed, etc., 4717
Meetings; Sunshine Act, 4717
Ocean transportation intermediary licenses:
AFS Logistics, Inc., et al., 4717–4718
ANC International, 4718–4719
Security Storage Co. of Washington, 4719

Federal Register Office
NOTICES
Public Laws; cummulatve list:
107th Congress; First Session, 00000

Food and Drug Administration
NOTICES
Reports and guidance documents; availability, etc.:
Nucleic acid tests use on pooled samples from source plasma donors to adequately and appropriately reduce HIV-1 and HCV transmission risk, 4719–4720

Forest Service
NOTICES
Environmental statements; notice of intent:
Pacific Southwest Region; vegetation management for reforestation, 4698–4699
Meetings:
Olympic Provincial Advisory Committee, 4699
Resource Advisory Committees—
Fresno County, 4699
Hood/Willamette, 4700
Idaho Panhandle, 4700
North Gifford Pinchot National Forest, 4699
South Gifford Pinchot National Forest, 4699–4700

Health and Human Services Department
See Agency for Toxic Substances and Disease Registry
See Food and Drug Administration
See Health Resources and Services Administration
See National Institutes of Health

Health Resources and Services Administration
NOTICES
Agency information collection activities:
Proposed collection; comment request, 4720
Applications, hearings, determinations, etc.:
Proposed collection; comment request, 4720–4722

Immigration and Naturalization Service
RULES
Nonimmigrant classes:
Victims of severe forms of trafficking in persons; new classification; eligibility for ''T'' status, 4783–4820
NOTICES
Agency information collection activities:
Submission for OMB review; comment request, 4745–4746

Indian Affairs Bureau
NOTICES
Meetings:
Indian trust asset management; tribal consultation, 4730–4731

Indian Trust Transition Office
NOTICES
Meetings:
Indian trust asset management; tribal consultation, 4730–4731

Interior Department
See Indian Affairs Bureau
See Indian Trust Transition Office
See Minerals Management Service
See National Park Service
See Reclamation Bureau
See Special Trustee for American Indians Office
See Surface Mining Reclamation and Enforcement Office
NOTICES
Meetings:
Indian trust asset management; tribal consultation, 4730–4731

Internal Revenue Service
NOTICES
Agency information collection activities:
Proposed collection; comment request, 4779–4780

International Trade Administration
NOTICES
Antidumping:
Structural steel beams from—
Germany, 4703–4704
Luxembourg, 4701–4702
Russian Federation, 4704–4706
Taiwan, 4702–4703

International Trade Commission
NOTICES
Import investigations:
Stainless steel bar from—
Taiwan, 4745

Justice Department
See Immigration and Naturalization Service
See Victims of Crime Office

Labor Department
See Employment and Training Administration
NOTICES
Agency information collection activities:
Proposed collection; comment request, 4746–4747

Legal Services Corporation
NOTICES
Grant and cooperative agreement awards:
Civil legal services to low-income clients—
Louisiana, 4760

Library of Congress
See Copyright Office, Library of Congress

Minerals Management Service
NOTICES
Agency information collection activities:
Submission for OMB review; comment request, 4731–4732

Morris K. Udall Scholarship and Excellence in National Environmental Policy Foundation
NOTICES
Agency information collection activities:
Submission for OMB review; comment request, 4760–4762

National Highway Traffic Safety Administration
PROPOSED RULES
Vehicles built in two or more stages:
Negotiated Rulemaking Committee—
Meetings, 4695

National Institutes of Health
NOTICES
Agency information collection activities:
Proposed collection; comment request, 4722
Submission for OMB review; comment request, 4722–4723
Meetings:
Fogarty International Center Advisory Board, 4723–4724
National Center for Research Resources, 4724
National Eye Institute, 4724
National Institute of Allergy and Infectious Diseases, 4726
National Institute of Dental and Craniofacial Research, 4725
National Institute of Environmental Health Sciences, 4726, 4728
National Institute of Mental Health, 4725
National Institute on Alcohol Abuse and Alcoholism, 4725
National Institute on Deafness and Other Communication Disorders, 4727–4728
National Institute on Drug Abuse, 4726–4727
National Library of Medicine, 4728
Scientific Review Center, 4728–4730

National Oceanic and Atmospheric Administration
RULES
Fishery conservation and management:
Alaska; fisheries of Exclusive Economic Zone—
Pollock, 4677–4678
Caribbean, Gulf, and South Atlantic fisheries—
Gulf of Mexico and South Atlantic coastal migratory pelagic resources, 4677
PROPOSED RULES
Fishery conservation and management:
Atlantic coastal fisheries cooperative management—
American lobster, 4697
Caribbean, Gulf of Mexico, and South Atlantic fisheries—
Snapper-grouper, 4696–4697
NOTICES
Meetings:
North Pacific Fishery Management Council, 4706

National Park Service
NOTICES
Environmental statements; availability, etc.:
Provincetown Municipal Airport, MA, 4732–4733
Environmental statements; notice of intent:
Chiricahua National Monument, AZ; fire management plan, 4733–4734
Schuylkill River Valley National Heritage Area, PA, 4734
Meetings:
Golden Gate National Recreation Area and Point Reyes National Seashore Advisory Commission, 4735
National Register of Historic Places:
Pending nominations, 4735–4736
Native American human remains and associated funerary objects:
University of Denver, Anthropology Department and Museum, CO—
Inventory from Big Sandy, Sublette County, WY, 4736–4737

National Science Foundation
NOTICES
Agency information collection activities:
Proposed collection; comment request, 4762–4763

Natural Resources Conservation Service
NOTICES
Environmental statements; availability, etc.:
Sixmile-St. Charles Watershed, CO, 4700–4701

Nuclear Regulatory Commission
NOTICES
Environmental statements; availability, etc.:
FirstEnergy Nuclear Operating Co., 4763–4764
Meetings:
Reactor Safeguards Advisory Committee, 4764
Reports and guidance documents; availability, etc.:
Updated and consolidated decommissioning policy and guidance; comment request, 4764–4765

Public Health Service
See Agency for Toxic Substances and Disease Registry

See Food and Drug Administration
See Health Resources and Services Administration
See National Institutes of Health

Reclamation Bureau
NOTICES
Contract negotiations:
Tabulation of water service and repayment; quarterly status report, 4737–4745

Research and Special Programs Administration
NOTICES
Hazardous materials:
Applications; exemptions, renewals, etc., 4777–4779

Rural Utilities Service
PROPOSED RULES
Telecommunications specifications and standards:
Materials, equipment, and construction—
Voice Frequency Loading Coils (PE-26); rescission, 4679–4680

Securities and Exchange Commission
NOTICES
Investment Company Act of 1940:
Deregistration applications—
PaineWebber Mutual Fund Trust et al., 4765–4767
Self-regulatory organizations; proposed rule changes:
American Stock Exchange LLC, 4767–4768
Government Securities Clearing Corp., 4768–4770

Special Trustee for American Indians Office
NOTICES
Meetings:
Indian trust asset management; tribal consultation, 4730–4731

State Department
NOTICES
Grants and cooperative agreements; availability, etc.:
International Sports Programming Initiative, 4770–4773
Presidential permits:
Reef International, L.L.C.; pipeline facilities construction and maintenance on U.S.-Mexican border, 4773

Surface Mining Reclamation and Enforcement Office
PROPOSED RULES
Permanent program and abandoned mine land reclamation plan submissions:
West Virginia, 4689–4692

Thrift Supervision Office
NOTICES
Agency information collection activities:
Submission for OMB review; comment request, 4780

Toxic Substances and Disease Registry Agency
See Agency for Toxic Substances and Disease Registry

Transportation Department
See Coast Guard
See Federal Aviation Administration
See National Highway Traffic Safety Administration
See Research and Special Programs Administration
See Transportation Security Administration
RULES
Workplace drug and alcohol testing programs:
Urine collection documentation form; CFR correction, 4677
NOTICES
Aviation proceedings:
Agreements filed, etc.; weekly receipts, 4773
Certificates of public convenience and necessity and foreign air carrier permits; weekly applications, 4773–4774

Transportation Security Administration
NOTICES
Agency information collection activities:
Submission for OMB review; comment request, 4865–4867

Treasury Department
See Internal Revenue Service
See Thrift Supervision Office

Veterans Affairs Department
RULES
Medical benefits:
Compensated Work Therapy/Transitional Residence Program, 4667–4668
NOTICES
Means test thresholds; cost-of-living adjustments, 4780–4781

Victims of Crime Office
NOTICES
Grants and cooperative agreements; availability, etc.:
Terrorism and Mass Violence Crimes; Antiterrorism and Emergency Assistance Program, 4821–4833

Separate Parts In This Issue

Part II
Justice Department, Immigration and Naturalization Service, 4783–4820

Part III
Justice Department, Victims of Crime Office, 4821–4833

Part IV
Health and Human Services Department, Agency for Toxic Substances and Disease Registry, 4835–4854

Part V
Transportation Department, Federal Aviation Administration, 4855–4863

Part VI
Department of Transportation, Transportation Security Administration, 4865–4867

Reader Aids
Consult the Reader Aids section at the end of this issue for phone numbers, online resources, finding aids, reminders, and notice of recently enacted public laws.

To subscribe to the Federal Register Table of Contents LISTSERV electronic mailing list, go to http://listserv.access.gpo.gov and select Online mailing list archives, FEDREGTOC-L, Join or leave the list (or change settings); then follow the instructions.

CFR PARTS AFFECTED IN THIS ISSUE

A cumulative list of the parts affected this month can be found in the Reader Aids section at the end of this issue.

7 CFR

Proposed Rules:

1755 4679

8 CFR

103 4784
212 4784
214 4784
274a 4784
299 4784

14 CFR

39 (3 documents) ...4649, 4650, 4652
71 (3 documents) 4654, 4655

Proposed Rules:

Ch. I 4680
25 4856
39 (2 documents) 4683, 4685

30 CFR

Proposed Rules:

948 4689

33 CFR

100 4656
165 (6 documents) 4656, 4658, 4660, 4662, 4664, 4665

Proposed Rules:

165 4692

37 CFR

Proposed Rules:

255 4694

38 CFR

17 4667

40 CFR

52 (2 documents) 4668, 4669
70 4673
80 4674
122 4675

Proposed Rules:

52 4695

47 CFR

0 4675
20 4675
22 4675
87 4675

49 CFR

40 4677

Proposed Rules:

567 4695
568 4695

50 CFR

622 4677
679 4677

Proposed Rules:

622 (2 documents) 4696
697 4697

Rules and Regulations

Federal Register
Vol. 67, No. 21
Thursday, January 31, 2002

This section of the FEDERAL REGISTER contains regulatory documents having general applicability and legal effect, most of which are keyed to and codified in the Code of Federal Regulations, which is published under 50 titles pursuant to 44 U.S.C. 1510.

The Code of Federal Regulations is sold by the Superintendent of Documents. Prices of new books are listed in the first FEDERAL REGISTER issue of each week.

DEPARTMENT OF TRANSPORTATION

Federal Aviation Administration

14 CFR Part 39

[Docket No. 2001–NM–229–AD; Amendment 39–12616; AD 2002–01–22]

RIN 2120–AA64

Airworthiness Directives; Short Brothers Model SD3 Series Airplanes

AGENCY: Federal Aviation Administration, DOT.

ACTION: Final rule.

SUMMARY: This amendment adopts a new airworthiness directive (AD), applicable to all Short Brothers Model SD3 series airplanes, that requires a one-time inspection of the installation of the bearing housings of the elevator torque shaft assembly, and corrective action if necessary. This action is necessary to prevent failure of the elevator torque shaft, which could result in reduced controllability of the airplane. This action is intended to address the identified unsafe condition.

DATES: Effective March 7, 2002.

The incorporation by reference of certain publications listed in the regulations is approved by the Director of the Federal Register as of March 7, 2002.

ADDRESSES: The service information referenced in this AD may be obtained from Short Brothers, Airworthiness & Engineering Quality, P.O. Box 241, Airport Road, Belfast BT3 9DZ, Northern Ireland. This information may be examined at the Federal Aviation Administration (FAA), Transport Airplane Directorate, Rules Docket, 1601 Lind Avenue, SW., Renton, Washington; or at the Office of the Federal Register, 800 North Capitol Street, NW., suite 700, Washington, DC.

FOR FURTHER INFORMATION CONTACT: Todd Thompson, Aerospace Engineer, International Branch, ANM–116, FAA, Transport Airplane Directorate, 1601 Lind Avenue, SW., Renton, Washington 98055–4056; telephone (425) 227–1175; fax (425) 227–1149.

SUPPLEMENTARY INFORMATION: A proposal to amend part 39 of the Federal Aviation Regulations (14 CFR part 39) to include an airworthiness directive (AD) that is applicable to all Short Brothers Model SD3 series airplanes was published in the **Federal Register** on October 4, 2001 (66 FR 50584). That action proposed to require a one-time inspection of the installation of the bearing housings of the elevator torque shaft assembly, and corrective action if necessary.

Comments

Interested persons have been afforded an opportunity to participate in the making of this amendment. No comments were submitted in response to the proposal or the FAA's determination of the cost to the public.

Conclusion

The FAA has determined that air safety and the public interest require the adoption of the rule as proposed.

Cost Impact

The FAA estimates that 75 Model SD3 series airplanes of U.S. registry will be affected by this AD, that it will take approximately 2 work hours per airplane to accomplish the required inspection, and that the average labor rate is $60 per work hour. Based on these figures, the cost impact of the inspection required by this AD on U.S. operators is estimated to be $9,000, or $120 per airplane.

The cost impact figure discussed above is based on assumptions that no operator has yet accomplished any of the requirements of this AD action, and that no operator would accomplish those actions in the future if this AD were not adopted. The cost impact figures discussed in AD rulemaking actions represent only the time necessary to perform the specific actions actually required by the AD. These figures typically do not include incidental costs, such as the time required to gain access and close up, planning time, or time necessitated by other administrative actions.

Regulatory Impact

The regulations adopted herein will not have a substantial direct effect on the States, on the relationship between the national Government and the States, or on the distribution of power and responsibilities among the various levels of government. Therefore, it is determined that this final rule does not have federalism implications under Executive Order 13132.

For the reasons discussed above, I certify that this action (1) is not a ''significant regulatory action'' under Executive Order 12866; (2) is not a ''significant rule'' under DOT Regulatory Policies and Procedures (44 FR 11034, February 26, 1979); and (3) will not have a significant economic impact, positive or negative, on a substantial number of small entities under the criteria of the Regulatory Flexibility Act. A final evaluation has been prepared for this action and it is contained in the Rules Docket. A copy of it may be obtained from the Rules Docket at the location provided under the caption **ADDRESSES.**

List of Subjects in 14 CFR Part 39

Air transportation, Aircraft, Aviation safety, Incorporation by reference, Safety.

Adoption of the Amendment

Accordingly, pursuant to the authority delegated to me by the Administrator, the Federal Aviation Administration amends part 39 of the Federal Aviation Regulations (14 CFR part 39) as follows:

PART 39—AIRWORTHINESS DIRECTIVES

1. The authority citation for part 39 continues to read as follows:

Authority: 49 U.S.C. 106(g), 40113, 44701.

§ 39.13 [Amended]

2. Section 39.13 is amended by adding the following new airworthiness directive:

2002–01–22 Short Brothers PLC: Amendment 39–12616. Docket 2001–NM–229–AD.

Applicability: All Model SD3 series airplanes, certificated in any category.

Note 1: This AD applies to each airplane identified in the preceding applicability provision, regardless of whether it has been modified, altered, or repaired in the area

subject to the requirements of this AD. For airplanes that have been modified, altered, or repaired so that the performance of the requirements of this AD is affected, the owner/operator must request approval for an alternative method of compliance in accordance with paragraph (c) of this AD. The request should include an assessment of the effect of the modification, alteration, or repair on the unsafe condition addressed by this AD; and, if the unsafe condition has not been eliminated, the request should include specific proposed actions to address it.

Compliance: Required as indicated, unless accomplished previously.

To prevent failure of the elevator torque shaft, which could result in reduced controllability of the airplane, accomplish the following:

Inspection

(a) Within 60 days after the effective date of this AD: Perform a detailed visual inspection of the bearing housings of the elevator torque shaft assembly to detect discrepancies (including movement of the housings relative to the mounting structure), in accordance with the applicable service bulletin listed in the following table:

TABLE 1.—SERVICE BULLETINS

For model—	Inspect in accordance with Short Brothers Service Bulletin—	Dated—
(1) SD3–60 Sherpa series airplanes	SD3–60 SHERPA–27–6	May 22, 2001
(2) SD3–Sherpa series airplanes	SD3 SHERPA–27–5	May 22, 2001
(3) SD3–60 series airplanes	SD360–27–31	May 22, 2001
(4) SD3–30 series airplanes	SD330–27–39	May 22, 2001

Note 2: For the purposes of this AD, a detailed visual inspection is defined as: ''An intensive visual examination of a specific structural area, system, installation, or assembly to detect damage, failure, or irregularity. Available lighting is normally supplemented with a direct source of good lighting at intensity deemed appropriate by the inspector. Inspection aids such as mirror, magnifying lenses, etc., may be used. Surface cleaning and elaborate access procedures may be required.''

Corrective Action

(b) If any discrepancy is found during the inspection required by paragraph (a) of this AD: Prior to further flight, replace any affected part with a new part, in accordance with the applicable service bulletin listed in Table 1 of this AD.

Note 3: The service bulletins listed in Table 1 of this AD recommend that operators submit a report of their inspection findings to the manufacturer. Although operators may submit such a report, this AD does not require it.

Alternative Methods of Compliance

(c) An alternative method of compliance or adjustment of the compliance time that provides an acceptable level of safety may be used if approved by the Manager, International Branch, ANM–116, Transport Airplane Directorate, FAA. Operators shall submit their requests through an appropriate FAA Principal Maintenance Inspector, who may add comments and then send it to the Manager, International Branch, ANM–116.

Note 4: Information concerning the existence of approved alternative methods of compliance with this AD, if any, may be obtained from the International Branch, ANM–116.

Special Flight Permits

(d) Special flight permits may be issued in accordance with sections 21.197 and 21.199 of the Federal Aviation Regulations (14 CFR 21.197 and 21.199) to operate the airplane to a location where the requirements of this AD can be accomplished.

Incorporation by Reference

(e) The actions shall be done in accordance with Short Brothers Service Bulletin SD3–60 SHERPA–27–6, dated May 22, 2001; Short Brothers Service Bulletin SD3–SHERPA–27–5, dated May 22, 2001; Short Brothers Service Bulletin SD360–27–31, dated May 22, 2001; or Short Brothers Service Bulletin SD330–27–39, dated May 22, 2001; as applicable. This incorporation by reference was approved by the Director of the Federal Register in accordance with 5 U.S.C. 552(a) and 1 CFR part 51. Copies may be obtained from Short Brothers, Airworthiness & Engineering Quality, P.O. Box 241, Airport Road, Belfast BT3 9DZ, Northern Ireland. Copies may be inspected at the FAA, Transport Airplane Directorate, 1601 Lind Avenue, SW., Renton, Washington; or at the Office of the Federal Register, 800 North Capitol Street, NW., suite 700, Washington, DC.

Note 5: The subject of this AD is addressed in British airworthiness directives 003–05–2001, 008–05–2001, 009–05–2001, and 007–05–2001.

Effective Date

(f) This amendment becomes effective on March 7, 2002.

Issued in Renton, Washington, on January 17, 2002.

Michael Kaszycki,

Acting Manager, Transport Airplane Directorate, Aircraft Certification Service.

[FR Doc. 02–1820 Filed 1–30–02; 8:45 am]

BILLING CODE 4910–13–P

DEPARTMENT OF TRANSPORTATION

Federal Aviation Administration

14 CFR Part 39

[Docket No. 2001–NM–200–AD; Amendment 39–12621; AD 2002–01–26]

RIN 2120–AA64

Airworthiness Directives; Israel Aircraft Industries, Ltd., Model 1124 and 1124A, and Model 1125 Westwind Astra Series Airplanes

AGENCY: Federal Aviation Administration, DOT.

ACTION: Final rule.

SUMMARY: This amendment adopts a new airworthiness directive (AD), applicable to all Israel Aircraft Industries, Ltd., Model 1124 and 1124A, and certain Model 1125 Westwind Astra series airplanes, that requires a one-time inspection of the attachment bolts installed on the engine inlet cowl and aft nacelle attachment flanges to verify correct part numbers of the bolts, and replacement of any discrepant/incorrect bolt with a correct attachment bolt. The actions specified by this AD are intended to prevent failure of attachment bolts due to fatigue, which could result in separation of the engine inlet cowl and aft nacelle, and consequent damage to the horizontal or vertical stabilizer. This action is intended to address the identified unsafe condition.

DATES: Effective March 7, 2002.

The incorporation by reference of certain publications listed in the regulations is approved by the Director of the Federal Register as of March 7, 2002.

ADDRESSES: The service information referenced in this AD may be obtained

from Galaxy Aerospace Corporation, One Galaxy Way, Fort Worth Alliance Airport, Fort Worth, Texas 76177. This information may be examined at the Federal Aviation Administration (FAA), Transport Airplane Directorate, Rules Docket, 1601 Lind Avenue, SW., Renton, Washington; or at the Office of the Federal Register, 800 North Capitol Street, NW., suite 700, Washington, DC.

FOR FURTHER INFORMATION CONTACT: Dan Rodina, Aerospace Engineer, International Branch, ANM–116, FAA, Transport Airplane Directorate, 1601 Lind Avenue, SW., Renton, Washington 98055–4056; telephone (425) 227–2125; fax (425) 227–1149.

SUPPLEMENTARY INFORMATION: A proposal to amend part 39 of the Federal Aviation Regulations (14 CFR part 39) to include an airworthiness directive (AD) that is applicable to all Israel Aircraft Industries, Ltd., Model 1124 and 1124A, and certain Model 1125 Westwind Astra series airplanes was published in the **Federal Register** on October 29, 2001 (66 FR 54465). That action proposed to require a one-time inspection of the attachment bolts installed on the engine inlet cowl and aft nacelle attachment flanges to verify correct part numbers of the bolts, and replacement of any discrepant/incorrect bolt with a correct attachment bolt.

Comments

Interested persons have been afforded an opportunity to participate in the making of this amendment. No comments were submitted in response to the proposal or the FAA's determination of the cost to the public.

Conclusion

The FAA has determined that air safety and the public interest require the adoption of the rule as proposed.

Cost Impact

The FAA estimates that 299 airplanes of U.S. registry will be affected by this AD, that it will take approximately 1 work hour per airplane to accomplish the inspection, and that the average labor rate is $60 per work hour. Based on these figures, the cost impact of the AD on U.S. operators is estimated to be $17,940, or $60 per airplane.

The cost impact figure discussed above is based on assumptions that no operator has yet accomplished any of the requirements of this AD action, and that no operator would accomplish those actions in the future if this AD were not adopted. The cost impact figures discussed in AD rulemaking actions represent only the time necessary to perform the specific actions actually required by the AD. These figures typically do not include incidental costs, such as the time required to gain access and close up, planning time, or time necessitated by other administrative actions.

Regulatory Impact

The regulations adopted herein will not have a substantial direct effect on the States, on the relationship between the national Government and the States, or on the distribution of power and responsibilities among the various levels of government. Therefore, it is determined that this final rule does not have federalism implications under Executive Order 13132.

For the reasons discussed above, I certify that this action (1) is not a ''significant regulatory action'' under Executive Order 12866; (2) is not a ''significant rule'' under DOT Regulatory Policies and Procedures (44 FR 11034, February 26, 1979); and (3) will not have a significant economic impact, positive or negative, on a substantial number of small entities under the criteria of the Regulatory Flexibility Act. A final evaluation has been prepared for this action and it is contained in the Rules Docket. A copy of it may be obtained from the Rules Docket at the location provided under the caption **ADDRESSES.**

List of Subjects in 14 CFR Part 39

Air transportation, Aircraft, Aviation safety, Incorporation by reference, Safety.

Adoption of the Amendment

Accordingly, pursuant to the authority delegated to me by the Administrator, the Federal Aviation Administration amends part 39 of the Federal Aviation Regulations (14 CFR part 39) as follows:

PART 39—AIRWORTHINESS DIRECTIVES

1. The authority citation for part 39 continues to read as follows:

Authority: 49 U.S.C. 106(g), 40113, 44701.

§ 39.13 [Amended]

2. Section 39.13 is amended by adding the following new airworthiness directive:

2002–01–26 Israel Aircraft Industries, Ltd.: Amendment 39–12621. Docket 2001–NM–200–AD.

Applicability: All Model 1124 and 1124A series airplanes, and Model 1125 Westwind Astra series airplanes having serial numbers 004 through 072 inclusive and 074 through 078 inclusive; certificated in any category.

Note 1: This AD applies to each airplane identified in the preceding applicability provision, regardless of whether it has been modified, altered, or repaired in the area subject to the requirements of this AD. For airplanes that have been modified, altered, or repaired so that the performance of the requirements of this AD is affected, the owner/operator must request approval for an alternative method of compliance in accordance with paragraph (b) of this AD. The request should include an assessment of the effect of the modification, alteration, or repair on the unsafe condition addressed by this AD; and, if the unsafe condition has not been eliminated, the request should include specific proposed actions to address it.

Compliance: Required as indicated, unless accomplished previously.

To prevent failure of attachment bolts due to fatigue, which could result in separation of the engine inlet cowl and aft nacelle, and consequent damage to the horizontal or vertical stabilizer, accomplish the following:

Inspection and Replacement, if Necessary

(a) Within 50 flight hours from the effective date of this AD, perform a one-time inspection of the bolts installed on the engine inlet cowl and aft nacelle attachment flanges to verify correct part numbers of the bolts. Before further flight, replace any discrepant bolts with the correct bolts, per 1124–Westwind (Israeli Aircraft Industries) Alert Service Bulletin 1124–54A–138, and Astra (Israeli Aircraft Industries) Alert Service Bulletin 1125–54A–247, both dated March 29, 2001; as applicable.

Alternative Methods of Compliance

(b) An alternative method of compliance or adjustment of the compliance time that provides an acceptable level of safety may be used if approved by the Manager, International Branch, ANM–116, Transport Airplane Directorate, FAA. Operators shall submit their requests through an appropriate FAA Principal Maintenance Inspector, who may add comments and then send it to the Manager, International Branch, ANM–116.

Note 2: Information concerning the existence of approved alternative methods of compliance with this AD, if any, may be obtained from the International Branch, ANM–116.

Special Flight Permits

(c) Special flight permits may be issued in accordance with §§ 21.197 and 21.199 of the Federal Aviation Regulations (14 CFR 21.197 and 21.199) to operate the airplane to a location where the requirements of this AD can be accomplished.

Incorporation by Reference

(d) The actions shall be done in accordance with 1124-Westwind (Israeli Aircraft Industries) Alert Service Bulletin 1124–54A–138, dated March 29, 2001; and Astra (Israeli Aircraft Industries) Alert Service Bulletin 1125–54A–247, dated March 29, 2001; as applicable. This incorporation by reference was approved by the Director of the Federal Register in accordance with 5 U.S.C. 552(a) and 1 CFR part 51. Copies may be obtained from Galaxy Aerospace Corporation, One Galaxy Way, Fort Worth Alliance Airport, Fort Worth, Texas 76177. Copies may be

inspected at the FAA, Transport Airplane Directorate, 1601 Lind Avenue, SW., Renton, Washington; or at the Office of the Federal Register, 800 North Capitol Street, NW., suite 700, Washington, DC.

Note 3: The subject of this AD is addressed in Israeli airworthiness directive 54–01–05–02, dated May 13, 2001.

Effective Date

(e) This amendment becomes effective on March 7, 2002.

Issued in Renton, Washington, on January 18, 2002.

Michael Kaszycki,

Acting Manager, Transport Airplane Directorate, Aircraft Certification Service.

[FR Doc. 02–1964 Filed 1–30–02; 8:45 am]

BILLING CODE 4910–13–P

DEPARTMENT OF TRANSPORTATION

Federal Aviation Administration

14 CFR Part 39

[Docket No. 2001–NE–02–AD; Amendment 39–12624; AD 2002–01–29]

RIN 2120–AA64

Airworthiness Directives; Rolls-Royce, plc. Models Tay 650–15 and 651–54 Turbofan Engines

AGENCY: Federal Aviation Administration, DOT.

ACTION: Final rule; request for comments.

SUMMARY: This amendment adopts a new airworthiness directive (AD) that is applicable to Rolls-Royce, plc (RR) models Tay 650–15 and 651–54 turbofan engines. This action requires borescope inspection of the high pressure compressor (HPC) stage 12 disc assembly to detect damage caused by HPC outlet guide vane (OGV) retaining bolt failure, and replacement of unserviceable parts with serviceable parts. This action also requires as terminating action, the incorporation of a new design retention arrangement for the HPC OGV, to prevent HPC OGV retaining bolt failure. This amendment is prompted by service reports of cracked HPC stage 11/12 disc spacers. The actions specified in this AD are intended to prevent an uncontained failure of the HPC stage 11/12 disc spacer, which could result in damage to the airplane.

DATES: Effective February 15, 2002. The incorporation by reference of certain publications listed in the rule is approved by the Director of the Federal Register as of February 15, 2002.

Comments for inclusion in the Rules Docket must be received on or before April 1, 2002.

ADDRESSES: Submit comments in triplicate to the Federal Aviation Administration (FAA), New England Region, Office of the Regional Counsel, Attention: Rules Docket No. 2001–NE–02–AD, 12 New England Executive Park, Burlington, MA 01803–5299. Comments may be inspected at this location, by appointment, between 8 a.m. and 4:30 p.m., Monday through Friday, except Federal holidays. Comments may also be sent via the Internet using the following address: *''9-ane-adcomment@faa.gov''*. Comments sent via the Internet must contain the docket number in the subject line.

The service information referenced in this AD may be obtained from Rolls-Royce plc, PO Box 31 Derby, DE24 8BJ, United Kingdom; telephone 011–44–1332–242424; fax 011–44–1332–249936. This information may be examined at the FAA, by appointment, between 8 a.m. and 4:30 p.m., Monday through Friday, except Federal holidays, at the FAA, New England Region, Office of the Regional Counsel, 12 New England Executive Park, Burlington, MA; or at the Office of the Federal Register, 800 North Capitol Street, NW., suite 700, Washington, DC.

FOR FURTHER INFORMATION CONTACT: Keith Mead, Aerospace Engineer, Engine Certification Office, FAA, Engine and Propeller Directorate, 12 New England Executive Park, Burlington, MA 01803–5299; telephone (781) 238–7744; fax (781) 238–7199.

SUPPLEMENTARY INFORMATION: The Civil Aviation Authority (CAA), which is the airworthiness authority for the United Kingdom (UK), recently notified the FAA that an unsafe condition may exist on RR models Tay 650–15 and 651–54 turbofan engines. The CAA advises that four cracked HPC stage 11/12 spacers have been found during engine overhaul. Investigation has concluded that the spacer cracking results from prior failures of the HPC OGV retaining bolts. The separated OGV bolt material is released into a cavity between the inner seal support assembly air seal and stage 12 rotor disc assembly, damaging the disc assembly, resulting in high stresses and cracking of the HPC stage 11/12 spacer. Loose object damage resulting from OGV retaining bolt material release is clearly visible during borescope inspection of the stage 12 rotor disc assembly rear face. Based on an engineering review, a redesign has been introduced to reduce the loading on the OGV retaining bolts, introduced by mandatory service bulletin (SB) Tay-72–1498, which is terminating action for this AD.

Manufacturer's Service Information

Rolls-Royce, plc has issued mandatory SB's Tay-72–1483, Revision 2, dated October 20, 2000, Tay-72–1498, dated October 20, 2000, and Tay-72–1498, Revision 1, dated December 1, 2000, that specify procedures for:

- Initial and repetitive borescope inspections, based on bolt cyclic life exposure, of the stage 12 rotor disc assembly for damage due to failed HPC OGV retaining bolts and, if necessary, replacement with serviceable parts.
- Introduction of revised retaining and locking features for the HPC OGV and outer seal spacer, to eliminate stage 12 rotor disc assembly damage and stage 11/12 spacer cracking.

The CAA has classified SB's Tay-72–1483, Revision 2, dated October 20, 2000; and Tay-72–1498, Revision 1, dated December 1, 2000; as mandatory and issued AD 005–12–99, dated December 2, 1999; and AD 003–10–2000, dated December 1, 2000, in order to assure the airworthiness of these RR Tay engines in the UK.

Bilateral Airworthiness Agreement

These engines are manufactured in the UK, and are type certificated for operation in the United States under the provisions of § 21.29 of the Federal Aviation Regulations (14 CFR 21.29) and the applicable bilateral airworthiness agreement. Pursuant to this bilateral airworthiness agreement, the CAA has kept the FAA informed of the situation described above. The FAA has examined the findings of the CAA, reviewed all available information, and determined that AD action is necessary for products of this type design that are certificated for operation in the United States.

FAA's Determination of an Unsafe Condition and Required Actions

Since an unsafe condition has been identified that is likely to exist or develop on other RR models Tay 650–15 and 651–54 turbofan engines of the same type design, this AD is being issued to prevent an uncontained failure of the HPC stage 11/12 disc spacer, which could result in damage to the airplane. This AD requires:

- Initial and repetitive borescope inspections of the stage 12 rotor disc assembly for damage due to failed HPC OGV retaining bolts, and replacement with serviceable parts as required.
- Introduction of revised retaining and locking features for the HPC OGV and outer seal spacer, to eliminate stage 12 rotor disc assembly damage and stage

11/12 spacer cracking due to failed HPC OGV retaining bolts.

The actions must be done in accordance with the service bulletins described previously.

Immediate Adoption of This AD

Since a situation exists that requires the immediate adoption of this regulation, it is found that notice and opportunity for prior public comment hereon are impracticable, and that good cause exists for making this amendment effective in less than 30 days. Therefore, a situation exists that allows the immediate adoption of this regulation.

Comments Invited

Although this action is in the form of a final rule that involves requirements affecting flight safety and, thus, was not preceded by notice and an opportunity for public comment, comments are invited on this rule. Interested persons are invited to comment on this rule by submitting such written data, views, or arguments as they may desire. Communications should identify the Rules Docket number and be submitted in triplicate to the address specified under the caption **ADDRESSES.** All communications received on or before the closing date for comments will be considered, and this rule may be amended in light of the comments received. Factual information that supports the commenter's ideas and suggestions is extremely helpful in evaluating the effectiveness of the AD action and determining whether additional rulemaking action would be needed.

Comments are specifically invited on the overall regulatory, economic, environmental, and energy aspects of the rule that might suggest a need to modify the rule. All comments submitted will be available, both before and after the closing date for comments, in the Rules Docket for examination by interested persons. A report that summarizes each FAA-public contact concerned with the substance of this AD will be filed in the Rules Docket.

Commenters wishing the FAA to acknowledge receipt of their comments submitted in response to this action must submit a self-addressed, stamped postcard on which the following statement is made: ''Comments to Docket Number 2001–NE–02–AD.'' The postcard will be date stamped and returned to the commenter.

Regulatory Analysis

This final rule does not have federalism implications, as defined in Executive Order 13132, because it would not have a substantial direct effect on the States, on the relationship between the national government and the States, or on the distribution of power and responsibilities among the various levels of government. Accordingly, the FAA has not consulted with state authorities prior to publication of this final rule.

The FAA has determined that this regulation is an emergency regulation that must be issued immediately to correct an unsafe condition in aircraft, and is not a ''significant regulatory action'' under Executive Order 12866. It has been determined further that this action involves an emergency regulation under DOT Regulatory Policies and Procedures (44 FR 11034, February 26, 1979). If it is determined that this emergency regulation otherwise would be significant under DOT Regulatory Policies and Procedures, a final regulatory evaluation will be prepared and placed in the Rules Docket. A copy of it, if filed, may be obtained from the Rules Docket at the location provided under the caption **ADDRESSES**.

List of Subjects in 14 CFR Part 39

Air transportation, Aircraft, Aviation safety, Incorporation by reference, Safety.

Adoption of the Amendment

Accordingly, pursuant to the authority delegated to me by the Administrator, the Federal Aviation Administration amends part 39 of the Federal Aviation Regulations (14 CFR part 39) as follows:

PART 39—AIRWORTHINESS DIRECTIVES

1. The authority citation for part 39 continues to read as follows:

Authority: 49 U.S.C. 106(g), 40113, 44701.

§ 39.13 [Amended]

2. Section 39.13 is amended by adding the following new airworthiness directive:

2002–01–29 Rolls-Royce, plc: Amendment 39–12624. Docket No. 2001–NE–02–AD.

Applicability

This airworthiness directive (AD) is applicable to Rolls-Royce, plc. (RR) models Tay 650–15 and 651–54 turbofan engines with high pressure compressor (HPC) outlet guide vane (OGV) retaining bolts part numbers (P/N's) BLT3602, DU909, and DU818 installed. These engines are installed on, but not limited to Boeing 727 and Fokker F.28 Mark 0100 airplanes.

Note 1: This AD applies to each engine identified in the preceding applicability provision, regardless of whether it has been modified, altered, or repaired in the area subject to the requirements of this AD. For engines that have been modified, altered, or repaired so that the performance of the requirements of this AD is affected, the owner/operator must request approval for an alternative method of compliance in accordance with paragraph (e) of this AD. The request should include an assessment of the effect of the modification, alteration, or repair on the unsafe condition addressed by this AD; and, if the unsafe condition has not been eliminated, the request should include specific proposed actions to address it.

Compliance

Compliance with this AD is required as indicated, unless already done.

To prevent an uncontained failure of the HPC stage 11/12 disc spacer, which could result in damage to the airplane, do the following:

Initial Inspection

(a) Perform borescope inspection to the rear side of the stage 12 rotor disc in accordance with paragraph 3.A.(1) of the Accomplishment Instructions of RR Mandatory Service Bulletin (SB) Tay-72–1483, Revision 2, dated October 20, 2000, at or before accumulating 8,000 cycles on the OGV retaining bolts, or within 30 days from the effective date of this AD, whichever occurs later. If damage is observed on the stage 12 rotor disc, replace unserviceable parts with serviceable parts as necessary.

Repetitive Inspections

(b) Thereafter, perform repetitive borescope inspections of the rear side of the stage 12 rotor disc no earlier than 1,800 and no later than 2,200 cycles-since-last-inspection, or no later than 18 months since-last-inspection, whichever occurs first, in accordance with paragraph 3.A.(1) of the Accomplishment Instructions of RR mandatory SB Tay-72–1483, Revision 2, dated October 20, 2000. If damage is observed on the stage 12 rotor disc, replace unserviceable parts with serviceable parts as necessary.

OGV Retaining Bolt Replacement

(c) For engines that had OGV bolts replaced with new bolts P/N's BLT3602, DU909, and DU818 as specified in RR SB Tay-72–1484, the initial and repetitive inspection requirements, based on engine cycles-since-bolt installation, are the same as specified in paragraphs (a) and (b) of this AD.

Terminating Action for the Inspections Required by This AD

(d) Before October 1, 2005 for Tay 650–15 engines, and before October 1, 2012 for Tay 651–54 engines, install new design retaining and locking hardware for the HPC OGV and outer seal housing assembly, in accordance with paragraph 3 of the Accomplishment Instructions of RR mandatory SB Tay-72–1498, dated October 20, 2000, or RR mandatory SB Tay-72–1498, Revision 1, dated December 1, 2000. After performing this action, the inspections specified in paragraphs (a) through (c) of this AD are no longer required.

Alternative Methods of Compliance

(e) An alternative method of compliance or adjustment of the compliance time that

provides an acceptable level of safety may be used if approved by the Manager, Engine Certification Office (ECO). Operators must submit their requests through an appropriate FAA Principal Maintenance Inspector, who may add comments and then send it to the Manager, ECO.

Note 2: Information concerning the existence of approved alternative methods of compliance with this airworthiness directive, if any, may be obtained from the ECO.

Special Flight Permits

(f) Special flight permits may be issued in accordance with §§ 21.197 and 21.199 of the Federal Aviation Regulations (14 CFR 21.197 and 21.199) to operate the airplane to a location where the requirements of this AD can be done.

Documents That Have Been Incorporated by Reference

(g) The inspections and replacements must be done in accordance with the following Rolls-Royce plc, mandatory SB's:

Document No.	Pages	Revision	Date
SB Tay-72–1483	1–4	2	October 20, 2000.
	5	Original	December 2, 1999.
Appendix 1	1–4	2	October 20, 2000.
Appendix 2	1–2	2	October 20, 2000.
Total pages: 11.			
SB Tay-72–1498	1–38	Original	October 20, 2000.
Total pages: 38.			
SB Tay-72–1498	1–38	1	December 1, 2000
Total pages: 38.			

The incorporations by reference were approved by the Director of the Federal Register in accordance with 5 U.S.C. 552(a) and 1 CFR part 51. Copies may be obtained from Rolls-Royce plc, PO Box 31 Derby, DE24 8BJ, United Kingdom; telephone 011–44–1332–242424; fax 011–44–1332–249936. Copies may be inspected, by appointment, at the FAA, New England Region, Office of the Regional Counsel, 12 New England Executive Park, Burlington, MA; or at the Office of the Federal Register, 800 North Capitol Street, NW., suite 700, Washington, DC.

Note 3: The subject of This AD is addressed in Civil Airworthiness Authority airworthiness directives AD 005–12–99, dated December 2, 1999; and AD 003–10–2000, dated December 1, 2000, in order to assure the airworthiness of these RR Tay engines in the UK.

Effective Date of This AD

(h) This amendment becomes effective on February 15, 2002.

Issued in Burlington, Massachusetts, on January 18, 2002.

Thomas A. Boudreau,

Acting Manager, Engine and Propeller Directorate, Aircraft Certification Service.

[FR Doc. 02–2060 Filed 1–30–02; 8:45 am]

BILLING CODE 4910–13–P

DEPARTMENT OF TRANSPORTATION

Federal Aviation Administration

14 CFR Part 71

[Airspace Docket No. 01–AEA–21FR]

Establishment of Class E Airspace; St. Mary's Hospital Heliport, MD

AGENCY: Federal Aviation Administration (FAA), DOT.

ACTION: Final rule.

SUMMARY: This action establishes Class E airspace at St. Mary's Hospital Heliport, MD. Development of an Area Navigation (RNAV), Helicopter RNAV137 approach, for the St. Mary's Hospital Heliport, MD has made action necessary. Controlled airspace extending upward from 700 feet Above Ground Level (AGL) is needed to contain aircraft executing the approach to the St. Mary's Hospital Heliport.

EFFECTIVE DATE: 0901 UTC February 21, 2002.

FOR FURTHER INFORMATION CONTACT: Mr. Francis Jordan, Airspace Specialist, Airspace Branch, AEA–520, Air Traffic Division, Eastern Region, Federal Aviation Administration, 1 Aviation Plaza, Jamaica, New York 11434–4809, telephone: (718) 553–4521.

SUPPLEMENTARY INFORMATION:

History

On August 28, 2001 a notice proposing to amend Part 71 of the Federal Aviation Regulations (14 CFR part 71) by establishing Class E airspace extending upward from 700 feet Above Ground Level (AGL) for an RNAV, Helicopter RNAV137 approach to the St. Mary's Hospital Heliport, MD was published in the **Federal Register** (44 FR 45200–45201).

Interested parties were invited to participate in this rulemaking proceeding by submitting written comments on the proposal to the FAA on or before July 11, 2001. No comments to the proposal were received. The rule is adopted as proposed. The coordinates for this airspace docket are based on North American Datum 83.

Class E airspace areas designations for airspace extending upward from 700 feet or more above the surface of the earth are published in paragraph 6005 of FAA order 7400.9J, dated August 31, 2001 and effective September 16, 2001, which in incorporated by reference in 14 CFR 71.1. The Class E airspace designation listed in this document will be published in the Order.

The Rule

This amendment to Part 71 of the Federal Aviation Regulations (14 CFR part 71) provides controlled Class E airspace extending upward from 700 feet above the surface for aircraft conducting Instrument Flight Rules (IFR) operations at the St. Mary's Hospital Heliport, MD.

The FAA has determined that this regulation only involves an established body of technical regulations for which frequent and routine amendments are necessary to keep them operationally current. Therefore, this regulation: (1) Is not a ''significant regulatory action'' under Executive Order 12866; (2) is not a ''significant rule'' under DOT Regulatory Policies and Procedures (44 FR 11034; February 26, 1979); and (3) does not warrant preparation of a Regulatory Evaluation as the anticipated impact is so minimal. Since this is a routine matter that will only affect air traffic procedures and air navigation it is certified that this rule will not have significant economic impact on a substantial number of small entities under the criteria of the Regulatory Flexibility Act.

List of Subjects in 14 CFR Part 71

Airspace, Incorporation by reference, Navigation (air).

Adoption of the Amendment

In consideration of the foregoing, the Federal Aviation Administration amends 14 CFR part 71 as follows:

PART 71—[AMENDED]

1. The authority citation for 14 CFR Part 71 continues to read as follows:

Authority: 49 U.S.C. 106(g), 40103, 40113, 40120; EO 10854, 24 FR 9565, 3 CFR, 1959–1063 Comp., p. 389.

§ 71.1 [Amended]

2. The incorporation by reference in 14 CFR 71.1 of Federal Aviation Administration Order 7400.9J, Airspace Designations and Reporting Points, dated August 31, 2001 and effective September 16, 2001, is amended as follows:

Paragraph 6005 Class E airspace areas extending upward from 700 feet or more above the surface of the earth.

AEA MD E5, St. Mary's Hospital [NEW]

St. Mary's Hospital Heliport
(Lat. 38°18′04″ N., long. 76°38′12″ W.)
Point in Space Coordinates
(Lat. 38°19′32″ N., long. 76°40′27″ W.)

That airspace extending upward from 700 feet above the surface within a 6 mile radius of the point in space for the SIAP to the St. Mary's Hospital Heliport.

Issued in Jamaica, New York on October 29, 2001.

Richard J. Ducharme,

Assistant Manager, Air Traffic Division, Eastern Region.

[FR Doc. 02–1005 Filed 1–30–02; 8:45 am]

BILLING CODE 4910–13–M

DEPARTMENT OF TRANSPORTATION

Federal Aviation Administration

14 CFR Part 71

[Airspace Docket No. 01–AEA–22FR]

Establishment of Class E Airspace; Easton Memorial Hospital Heliport, MD

AGENCY: Federal Aviation Administration (FAA), DOT.

ACTION: Final rule.

SUMMARY: This action establishes Class E airspace at Easton Memorial Hospital Heliport, Easton, MD. Development of an Area Navigation (RNAV), Helicopter RNAV036 approach, for the Easton Memorial Hospital Heliport, MD has made this action necessary. Controlled airspace extending upward from 700 feet Above Ground Level (AGL) is needed to contain aircraft executing the approach to the Easton Memorial Hospital Heliport.

EFFECTIVE DATE: 0901 UTC February 21, 2002.

FOR FURTHER INFORMATION CONTACT: Mr. Francis Jordan, Airspace Specialist, Airspace Branch, AEA–520, Air Traffic Division, Eastern Region, Federal Aviation Administration, 1 Aviation Plaza, Jamaica, New York 11434–4809, telephone: (718) 553–4521.

SUPPLEMENTARY INFORMATION:

History

On August 28, 2001 a notice proposing to amend Part 71 of the Federal Aviation Regulations (14 CFR part 71) by establishing Class E airspace extending upward from 700 feet Above Ground Level (AGL) for an RNAV, Helicopter RNAV036 approach to the Easton Memorial Hospital Heliport, Easton, MD, was published in the **Federal Register** (66 FR 45198–45199).

Interested parties were invited to participate in this rulemaking proceeding by submitting written comments on the proposal to the FAA on or before September 27, 2001. No comments to the proposal were received. The rule is adopted as proposed. The coordinates for this airspace docket are based on North American Datum 83.

Class E airspace areas designations for airspace extending upward from 700 feet or more above the surface of the earth are published in paragraph 6005 of FAA Order 7400.9J, dated August 31, 2001 and effective September 16, 2001, which is incorporated by reference in 14 CFR 71.1. The Class E airspace designation listed in this document will be published in the Order.

The Rule

This amendment to Part 71 of the Federal Aviation Regulations (14 CFR part 71) provides controlled Class E airspace extending upward from 700 feet above the surface for aircraft conducting Instrument Flight Rules (IFR) operations at the Easton Memorial Hospital Heliport, Easton, MD.

The FAA has determined that this regulation only involves an established body of technical regulations for which frequent and routine amendments are necessary to keep them operationally current. Therefore, this regulation: (1) Is not a ''significant regulatory action'' under Executive Order 12866; (2) is not a ''significant rule'' under DOT Regulatory Policies and Procedures (44 FR 11034; February 26, 1979); and (3) does not warrant preparation of a Regulatory Evaluation as the anticipated impact is so minimal. Since this a routine matter that will only affect air traffic procedures and air navigation it is certified that this rule will not have significant economic impact on a substantial number of small entities under the criteria of the Regulatory Flexibility Act.

List of Subjects in 14 CFR Part 71

Airspace, Incorporation by reference, Navigation (air).

Adoption of the Amendment

In consideration of the forging, the Federal Aviation Administration amends 14 CFR part 71 as follows:

PART 71—[AMENDED]

1. The authority citation for 14 CFR Part 71 continues to read as follows:

Authority: 49 U.S.C. 106(g), 40103, 40113, 40120; EO 10854, 24 FR 9565, 3 CFR, 1959–1963 Comp., p. 389.

§ 71.1 [Amended]

2. The incorporation by reference in 14 CFR 71.1 of Federal Aviation Administration Order 7400.9J, Airspace Designations and Reporting Points, dated August 31, 2001, and effective September 16, 2001, is amended as follows:

Paragraph 6005 Class E airspace areas extending upward from 700 feet or more above the surface of the earth.

AEA MD E5, Easton Memorial Hospital [NEW]

Easton Memorial Hospital Heliport
(Lat. 38°46′08″ N., long. 76°04′22″ W.)
Point in Space Coordinates
(Lat. 38°46′18″ N., long. 76°06′10″ W.)

That airspace extending upward from 700 feet above the surface within a 6 mile radius of the point in space for the SIAP to the Easton Memorial Hospital Heliport, Easton, MD.

Issued in Jamaica, New York on October 29, 2001.

Richard J. Ducharme,

Assistant Manager, Air Traffic Division, Eastern Region.

[FR Doc. 02–1006 Filed 1–30–02; 8:45 am]

BILLING CODE 4910–13–M

DEPARTMENT OF TRANSPORTATION

Federal Aviation Administration

14 CFR Part 71

[Airspace Docket No. 01–AWP–29]

Amendment of Honolulu Class E5 Airspace Area Legal Description

AGENCY: Federal Aviation Administration (FAA) DOT.

ACTION: Final rule.

SUMMARY: This rule amends the legal description of the Honolulu International Airport Class E5 airspace area. The amended description replaces all references to Naval Air Station (NAS) Barbers Point with Kalaeloa, John Rogers Field.

EFFECTIVE DATE: 0901 UTC, February 21, 2002.

FOR FURTHER INFORMATION CONTACT: Debra Trindle, Airspace Specialist, Airspace Branch, AWP–520.10, Air Traffic Division, Western-Pacific Region, Federal Aviation Administration, 15000 Aviation Boulevard, Lawndale, California 90261, telephone (310) 725–6613.

SUPPLEMENTARY INFORMATION:

History

In 1999, the United States Navy vacated NAS Barbers Point under the mandates of the Base Realignment and Closure Act. The airport was renamed Kalaeloa, John Rogers Field on September 9, 1999. The existing legal description for the Honolulu International Airport Class E5 airspace area still refers to NAS Barbers Point. This rule amends that description to reflect the correct name of Kalaeloa, John Rogers Field. It does not change the dimensions, configuration, or operating requirements of the affected airspace.

Class E5 airspace is published in Paragraph 6005 of FAA Order 7400.9J, Airpsace Designations and Reporting Points, dated August 31, 2001 and effective September 16, 2002, which is incorporated by reference in 14 CFR 71.1. The Class E5 airspace designation listed in this document would be published subsequently in this Order.

The Rule

This amendment to 14 CFR part 71 of the Federal Aviation Regulations amend the Class E5 airspace for Honolulu.

The FAA has determined that this regulation only involves an established body of technical regulations for which frequent and routine amendments are necessary to keep them operationally current. Therefore, this regulation—(1) is no a ''significant regulatory action'' under Executive Order 12866; (2) is not a ''significant rule'' under DOT Regulatory Policies and Procedures (44 FR 11034; February 26, 1979); and (3) does not warrant preparation of a Regulatory Evaluation as the anticipated impact is so minimal. Since this is a routine matter that will only affect air traffic procedures and air navigation, it is certified that this rule would not have a significant economic impact on a substantial number of small entities under the criteria of the Regulatory Flexibility Act.

List of Subjects 14 CFR Part 71

Airspace, Incorporation by reference, Navigation (air).

Adoption of the Amendment

In consideration of the foregoing, the Federal Aviation Administration amends 14 CFR part 71 as follows:

PART 71—DESIGNATION OF CLASS A, CLASS B, CLASS C, CLASS D AND CLASS E AIRSPACE AREAS; AIRWAYS; ROUTES; AND REPORTING POINTS

1. The authority citation for 14 CFR part 71 continues to read as follows:

Authority: 49 U.S.C. 106(g), 40103, 40113, 40120; E.O. 10854, 24 FR 9565, 3 CFR, 1959–1963 Comp., p. 389.

§ 71.1 [Amended]

2. The incorporation by reference in 14 CFR 71.1 of the Federal Aviation Administration Order 7400.9J, Airspace Designations and Reporting Points, dated August 31, 2001, and effective September 16, 2001, is amended as follows:

Paragraph 6005 Class E airspace areas extending upward from 700 feet or more above the surface of the earth.

* * * * *

AWP HI E5 Honolulu International Airport, HI [Revised]

Honolulu International Airport, HI
(Lat. 21°19′08″ N., long. 157°55′21″ W.)
Kalaeloa John Rogers Field
(Lat. 21°18′21″ N., long. 158°04′20″ W.)
Honolulu VORTAC
(Lat. 21°18′30″ N., long. 157°55′50″W.)

That airspace extending upward from 700 feet above the surface south and southeast of Honolulu International Airport beginning at lat. 21°20′19″ N., long. 157°51′05″ W., thence south to lat. 21°15′19″ N., long. 157°49′05″ W., thence east along the shoreline to where the shoreline intercepts the Honolulu VORTAC 15-mile radius, then clockwise along the 15-mile radius of the Honolulu VORTAC to intercept the Honolulu VORTAC 241° radial, then northeast bound along the Honolulu VORTAC 241° radial to intercept the 4.3-mile radius south of Kalaeloa John Rogers Field, then counterclockwise along the arc of the 4.3-mile radius of Kalaeloa John Rogers Field to and counterclockwise along the arc of a 5-mile radius of the Honolulu VORTAC to the Honolulu VORTAC 106° radial, then westbound along the Honolulu 106° radial to the 4-mile radius of the Honolulu VORTAC, then counterclockwise along the 4-mile radius to intercept the Honolulu VORTAC 071° radial, thence to the point of beginning and that airspace beginning at lat. 21°10′25″ N., long. 158°11′22″ W., to lat. 21°16′05″ N., long. 158°14′35″ W.; to lat. 21°16′30″ N., long. 158°13′46″ W.; to lat. 21°16′50″ N., long. 158°00′00″ W., to the point of beginning.

* * * * *

Issued in Los Angeles, California, on November 14, 2001.

Dawna J. Vicars,

Acting Manager, Air Traffic Division, Western-Pacific Region.

[FR Doc. 02–862 Filed 1–30–02; 8:45 am]

BILLING CODE 4910–13–M

DEPARTMENT OF TRANSPORTATION

Coast Guard

33 CFR Parts 100 and 165

[COTP Honolulu 01–008]

RIN 2115–AA97 and 2115–AA98

Security Zones; Oahu, Maui, HI, and Kauai, HI

AGENCY: Coast Guard, DOT.

ACTION: Temporary final rule.

SUMMARY: The Coast Guard is establishing security zones in designated waters adjacent to the islands of Oahu, Maui, Hawaii, and Kauai, HI for a period of six months. These security zones are necessary to protect personnel, vessels, and facilities from acts of sabotage or other subversive acts, accidents, or other causes of a similar nature during operations and will extend from the surface of the water to the ocean floor. When the zones are activated, entry into these zones is prohibited unless authorized by the Coast Guard Captain of the Port Honolulu, HI. This rule also terminates a previous rule published October 17, 2001 creating security zones in these areas until March 22, 2002.

DATES: This rule is effective from 6 a.m. HST October 19, 2001, to 4 p.m. HST April 19, 2002. 33 CFR 165.T14–058 published October 17, 2001 (66 FR 52693), is terminated.

ADDRESSES: The docket for this rulemaking is maintained by the Commanding Officer, U.S. Coast Guard Marine Safety Office Honolulu, 433 Ala Moana Blvd., Honolulu, Hawaii 96813. Docket material is available for inspection or copying at this location between 7 a.m. and 4:30 p.m. on weekdays, except Federal holidays.

FOR FURTHER INFORMATION CONTACT: LCDR M. A. Willis, Coast Guard Marine Safety Office Honolulu, Hawaii at (808) 522–8260.

SUPPLEMENTARY INFORMATION:

Regulatory Information

Recent terrorist incidents in New York and Washington, DC have called for the implementation of additional measures to protect the national

security. These temporary rules are intended to provide for the safety and security of the public, maritime commerce, and transportation, by creating security zones in designated harbors, anchorages, facilities, and adjacent navigable waters of the United States. As authorized by 5 U.S.C. 553, we did not publish a notice of proposed rulemaking (NPRM) for this regulation and there is good cause for us to make the rule effective in less than 30 days after publication in the **Federal Register**. Publishing an NPRM and delaying this rule from becoming effective would be contrary to the public interest since immediate action is needed to protect persons, vessels, and facilities in various areas on the islands of Oahu, Maui, Hawaii, and Kauai, HI. There was insufficient time to publish a proposed rule in advance of the event or to provide a delayed effective date. Under these circumstances, following normal rulemaking procedures would be impracticable.

Background and Purpose

The Coast Guard is establishing designated security zones in the waters adjacent to the islands of Oahu, Maui, Hawaii, and Kauai, HI for a period of six-months. These security zones are necessary to protect personnel, vessels, and facilities from acts of sabotage or other subversive acts, accidents, or other causes of a similar nature during operations. These security zones extend from the surface of the water to the ocean floor. Entry into these zones is prohibited unless authorized by the Coast Guard Captain of the Port Honolulu, HI. Representatives of the Captain of the Port Honolulu will enforce these security zones. The Captain of the Port may be assisted by other federal or state agencies. Periodically, by Broadcast Notice to Mariners, the Coast Guard will announce the existence or status of the temporary security zones in this rule.

Regulatory Evaluation

This temporary final rule is not a significant regulatory action under section 3(f) of Executive Order 12866 and does not require an assessment of potential costs and benefits under section 6(a)(3) of that order. The Office of Management and Budget has not reviewed it under that order. It is not significant under the regulatory policies and procedures of the Department of Transportation (DOT) (44 FR 11040, February 26, 1979). The U.S. Coast Guard expects the economic impact of this action to be so minimal that a full Regulatory Evaluation under paragraph 10(e) of the regulatory policies and procedures of DOT is unnecessary. This expectation is based on the temporary duration of the zone and the limited geographic area affected by it.

Small Entities

Under the Regulatory Flexibility Act (5 U.S.C. 601–612), we considered whether this rule would have a significant economic impact on a substantial number of small entities. The term ''small entities'' comprises small businesses, not-for-profit organizations that are independently owned and operated and are not dominant in their fields, and governmental jurisdictions with populations of less than 50,000. The Coast Guard certifies under 5 U.S.C. 605(b) that this regulation will not have a significant economic impact on a substantial number of small entities. No small business impacts are anticipated due to the small size of the zone and the short duration of the security zone in any one area.

Assistance for Small Entities

Because we did not anticipate any small business impacts, we did not offer assistance to small entities in understanding the rule.

Collection of Information

This rule calls for no new collection of information under the Paperwork Reduction Act of 1995 (44 U.S.C. 3501–3520 *et seq.*).

Federalism

The Coast Guard has analyzed this rule under Executive Order 13132, and has determined this rule does not have implications for federalism under that Order.

Unfunded Mandates Reform Act

The Unfunded Mandates Reform Act of 1995 (2 U.S.C. 1531–1538) governs the issuance of Federal regulations that require unfunded mandates. An unfunded mandate is a regulation that requires a State, local, or tribal government or the private sector to incur direct costs without the Federal Government having first provided the funds to pay those unfunded mandate costs. This rule will not impose an unfunded mandate.

Indian Tribal Governments

This rule does not have tribal implications under Executive Order 13175, Consultation and Coordination with Indian Tribal Governments, because it does not have a substantial direct effect on one or more Indian tribes, on the relationship between the Federal Government and Indian tribes, or on the distribution of power and responsibilities between the Federal Government and Indian tribes.

Taking of Private Property

This rule will not affect a taking of private property or otherwise have taking implications under Executive Order 12630, Governmental Actions and Interference with Constitutionally Protected Property Rights.

Civil Justice Reform

This rule meets applicable standards in sections 3(a) and 3(b)(2) of Executive Order 12988, Civil Justice Reform, to minimize litigation, eliminate ambiguity, and reduce burden.

Protection of Children

We have analyzed this rule under Executive Order 13045, Protection of Children from Environmental Health Risks and Safety Risks. This rule is not an economically significant rule and does not concern an environmental risk to health or risk to safety that may disproportionately affect children.

Environment

The Coast Guard considered the environmental impact of this action and concluded that, under figure 2–1, paragraph (34)(g) of Commandant Instruction M16475.1D, this rule is categorically excluded from further environmental documentation. As an emergency action, the environmental analysis requisite regulatory consultations, and categorical exclusion determination, will be prepared and submitted after establishment of this temporary security zone, and will be available for inspection or copying where indicated under addresses.

List of Subjects

33 CFR Part 110

Anchorage grounds.

33 CFR Part 165

Harbors, Marine safety, Navigation (water), Reporting and recordkeeping requirements, Security measures, Waterways.

For the reasons set out in the preamble, the Coast Guard amends 33 CFR parts 110 and 165 as follows:

PART 110—ANCHORAGE REGULATIONS

1. The authority citation for part 110 continues to read as follows:

Authority: 33 U.S.C. 471, 1221 through 1236, 2030, 2035, 2071; 49 CFR 1.46 and 33 CFR 1.05–1(g).

2. From 6 a.m. October 19, 2001, until 4 p.m. April 19, 2002, in § 110.235, add a new paragraph (c) to read as follows:

§ 110.235 Pacific Ocean (Mamala Bay), Honolulu Harbor, Hawaii (Datus: NAD 83)

* * * * *

(c) Before entering in the anchorage grounds in this section, you must first obtain permission from the Captain of the Port Honolulu.

PART 165—REGULATED NAVIGATION AREAS AND LIMITED ACCESS AREAS

3. The authority citation for part 165 continues to read as follows:

Authority: 33 U.S.C. 1231; 50 U.S.C. 191, 33 CFR 1.05–1(g), 6.04–1, 6.04–6, 160.5, 49 CFR 1.46.

§ 165.T14–058 [Removed]

4. Remove § 165.T14–058.

5. From 6 a.m. October 19, 2001, until 4 p.m. April 19, 2002, a new § 165.T14–061 is temporarily added to read as follows:

§ 165.T14–061 Security Zones: Oahu, Maui, Hawaii, and Kauai, HI.

(a) *Location.* The following areas are security zones:

(1) All waters of Honolulu Harbor and entrance channel, Keehi Lagoon, and General Anchorages A, B, C, and D as defined in 33 CFR 110.235 that are shoreward of the following coordinates: The shoreline of a line connecting 21°17.68′ N, 157°52.0′ W; thence due south to 21°16.0′ N, 157°52.0′ W; thence due west to 21°16.0′ N, 157°55.58′ W; thence due north to Honolulu International Airport Reef Runway at 21°18.25′ N, 157°55.58′ W.

(2) The waters around the Tesoro Single Point Mooring extending 1,000 yards in all directions from position 21°16.2′ N, 158°05.3′ W.

(3) The Kahului Harbor and Entrance Channel, Maui, HI consisting of all waters shoreward of the COLREGS DEMARCATION line. (See 33 CFR 80.1460).

(4) All waters within the Nawiliwili Harbor, Kauai, HI shoreward of the COLREGS DEMARCATION line (See 33 CFR 80.1450).

(5) All waters of Port Allen Harbor, Kauai, HI shoreward of the COLREGS DEMARCATION line (See 33 CFR 80.1440).

(6) Hilo Harbor and Entrance Channel, Hawaii, HI consisting of all waters shoreward of the COLREGS DEMARCATION line (See 33 CFR 80.1480).

(7) The waters extending out 500 yards in all directions from cruise ship vessels anchored within 3 miles of

(i) Lahaina Small Boat Harbor, Maui, between Makila Point and Puunoa Point.

(ii) Kailua-Kona Small Boat Harbor, Hawaii, between Keahulolu Point and Puapuaa Point.

(b) *Designated representative.* A designated representative of the Captain of the Port is any Coast Guard commissioned officer, warrant or petty officer that has been authorized by the Captain of the Port Honolulu to act on his behalf. The following officers have or will be designated by the Captain of the Port Honolulu: The senior Coast Guard boarding officer on each vessel enforcing the security zone.

(c) *Regulations.*

(1) In accordance with the general regulations in § 165.33 of this part, entry into these zones is prohibited unless authorized by the Captain of the Port or his designated representatives.

(2) The existence or status of the temporary security zones in this section will be announced periodically by Broadcast Notice to Mariners.

(d) *Authority.* The authority for this section is 33 U.S.C. 1226; 49 CFR 1.46.

(e) *Effective dates:* This section is effective from 6 a.m. HST October 19, 2001, until 4 p.m. HST April 19, 2002.

Dated: October 19, 2001.

R. D. Utley,

Rear Admiral, Coast Guard Commander, Fourteenth Coast Guard District.

[FR Doc. 02–2356 Filed 1–30–02; 8:45 am]

BILLING CODE 4910–15–P

DEPARTMENT OF TRANSPORTATION

Coast Guard

33 CFR Part 165

[CGD11–01–008]

RIN 2115–AA97

Security Zone; Naval Supply Center Pier, San Diego Bay, CA

AGENCY: Coast Guard, DOT.

ACTION: Final rule.

SUMMARY: The Coast Guard is creating a permanent security zone around the Fleet Industrial Supply Center (formerly the Naval Supply Center) Pier at Naval Base, San Diego, at the request of the U.S. Navy. The establishment of this security zone is needed to ensure the physical protection of naval vessels moored at the Fleet Industrial Supply Center pier.

DATES: This rule becomes effective December 17, 2001.

ADDRESSES: Documents as indicated in this preamble are available for inspection or copying at the Coast Guard Marine Safety Office, 2716 North Harbor Drive, San Diego, CA 92101–1064 between 7:30 a.m. and 4 p.m., Monday through Friday, except Federal holidays.

FOR FURTHER INFORMATION CONTACT: Lieutenant Christopher Hochschild, Vessel Traffic Management Section, 11th Coast Guard District, telephone (510) 437–2940; e-mail: *chochschild@d11.uscg.mil.*

SUPPLEMENTARY INFORMATION:

Regulatory History

On June 13, 2001, the Coast Guard published a notice of proposed rulemaking (NPRM) entitled Security Zone; Naval Supply Center Pier, San Diego Bay, CA in the **Federal Register** (66 FR 31870). The Coast Guard did not receive any letters commenting on the proposed rule. No public hearing was requested, and none was held. Since publication of the NPRM, the Navy has notified the Coast Guard that it has changed the name of the pier from the Naval Supply Center Pier to the Fleet Industrial Supply Center Pier.

In keeping with the requirements of 5 U.S.C. 553(d)(3), the Coast Guard finds that good cause exists for making this regulation effective immediately. The Coast Guard balanced the necessity for immediate implementation against the principles of fundamental fairness which require that all effected persons be afforded a reasonable time to prepare for the effective date of the rule. In light of the events of September 11, 2001, the Coast Guard believes it is in the national interest to immediately implement the rule to provide for security zone coverage around the pier. The Coast Guard further believes that it has provided the public adequate notice and time to adapt to the security zone's implementation through the NPRM. In addition, the California Coastal Commission, in its Coast Zone Management Act Determination of October 16, 2001 discussed the minimal impact the zone will have on the public: ''These areas [including the subject security zone] are not typically used for recreational or commercial boating, and the restrictions will not adversely affect navigation or boating in San Diego Bay.'' The Coast Guard was delayed slightly in implementing this final rule because the attacks on the World Trade Center in New York and the Pentagon in Washington, DC caused the Coast Guard and the Navy to re-examine the whole scheme of security zones contemplated for San Diego to ensure they adequately met force protection and national defense needs.

Background and Purpose

The Coast Guard is creating a permanent security zone around the newly-named Fleet Industrial Supply Center Pier at Naval Base, San Diego (formerly known as the Naval Supply Center Pier). The security zone consists of the waters of San Diego Bay extending approximately 100 feet out from the north, west, and south sides of the Fleet Industrial Supply Center Pier.

Currently, there is a restricted area around the Fleet Industrial Supply Center Pier, 33 CFR 334.870(d). The Navy believes that this restricted area, by itself, is insufficient to adequately safeguard its vessels. The Navy has been reviewing all aspects of its anti-terrorism and force protection posture in response to the attack on the USS *COLE.* The attacks of September 11, 2001 and the heightened state of military alert resulting therefrom add substantial urgency to the creation of this security zone. The creation of this security zone will help safeguard vessels moored at the Fleet Industrial Supply Center and waterside facilities from destruction, loss, or injury from sabotage or other subversive acts, accidents, or other causes of a similar nature.

The creation of this security zone will also prevent recreational and commercial craft from interfering with military operations involving naval vessels and it will protect transiting recreational and commercial vessels, and their respective crews, from the navigational hazards posed by such military operations. Unlike the current restricted area, under this proposed rule entry into, transit through, or anchoring within this security zone would be prohibited unless authorized by the Captain of the Port, or the Commander, Navy Region Southwest.

Vessels or persons violating this section would be subject to the penalties set forth in 50 U.S.C. 192 and 18 U.S.C. 3571: seizure and forfeiture of the vessel, a monetary penalty of not more than $250,000, and imprisonment for not more than 10 years.

The U.S. Coast Guard may be assisted in the patrol and enforcement of this security zone by the U.S. Navy.

Discussion of Comments and Changes

No comments were received during the NPRM comment period.

To reflect the pier's name change, the Coast Guard has made the following minor technical amendments to the final rule that did not appear in the NPRM: In paragraph (a) of the final rule, the Naval Supply Center Pier has been re-named as the Fleet Industrial Supply Center Pier. Also, to reflect a name change resulting from the Navy's 1998 regionalization process, the Coast Guard has made the following minor technical amendment to the final rule which did not appear in the NPRM: In paragraph (b) of the final rule, Commanding Officer, Naval Base San Diego has been re-named as the Commander, Navy Region Southwest.

Regulatory Evaluation

This rule is not a ''significant regulatory action'' under section 3(f) of Executive Order 12866, Regulatory Planning and Review, and does not require an assessment of potential costs and benefits under section 6(a)(3) of that Order. The Office of Management and Budget has not reviewed it under that Order. It is not ''significant'' under the regulatory policies and procedures of the Department of Transportation (DOT)(44 FR 11040, February 26, l979). This rule will have minimal additional impact on vessel traffic because it is already a restricted area codified at 33 CFR 334.870.

Small Entities

Under the Regulatory Flexibility Act (5 U.S.C. 601–612), we have considered whether this rule would have a significant economic impact on a substantial number of small entities. The term ''small entities'' comprises small businesses, not-for-profit organizations that are independently owned and operated and are not dominant in their fields, and governmental jurisdictions with populations of less than 50,000. The Coast Guard certifies under 5 U.S.C. 605(b) that this rule will not have a significant economic impact on a substantial number of small entities.

Collection of Information

This rule calls for no new collection of information under the Paperwork Reduction Act (44 U.S.C. 3501–3520).

Federalism

The Coast Guard has analyzed this rule under Executive Order 13132 and has determined that it does not have implications for federalism.

Unfunded Mandates Reform Act

The Unfunded Mandates Reform Act of 1995 (2 U.S.C. 1531–1538) governs the issuance of Federal regulations that require unfunded mandates. An unfunded mandate is a regulation that requires State, local, or tribal government or the private sector to incur direct costs without the Federal Government's having first provided the funds to pay those costs.

Taking of Private Property

This rule will not effect a taking of private property or otherwise have taking implications under Executive Order 12630, Governmental Actions and Interference with Constitutionally Protected Property Rights.

Civil Justice Reform

This rule meets applicable standards in sections 3(a) and 3(b)(2) of Executive Order 12988, Civil Justice Reform, to minimize litigation, eliminate ambiguity, and reduce burden.

Protection of Children

We have analyzed this rule under Executive Order 13045, Protection of Children from Environmental Health Risks and Safety Risks. This rule is not an economically significant rule and does not create an environmental risk to health or risk to safety that may disproportionately affect children.

Indian Tribal Governments

This rule does not have tribal implications under Executive Order 13175, Consultation and Coordination with Indian Tribal Governments, because it does not have a substantial direct effect on one or more Indian tribes, on the relationship between the Federal Government and Indian tribes, or on the distribution of power and responsibilities between the Federal Government and Indian tribes.

Energy Effects

We have analyzed this rule under Executive Order 13211, Actions Concerning Regulations That Significantly Affect Energy Supply, Distribution, or Use. We have determined that it is not a ''significant energy action'' under that order because it is not a ''significant regulatory action'' under Executive Order 12866 and is not likely to have a significant adverse effect on the supply, distribution, or use of energy. It has not been designated by the Administrator of the Office of Information and Regulatory Affairs as a significant energy action. Therefore, it does not require a Statement of Energy Effects under Executive Order 13211.

Environment

We considered the environmental impact of this rule and concluded that under figure 2–1, paragraph (34)(g) of Commandant Instruction M16475.lD, this rule is categorically excluded from further environmental documentation. This rule creates a security zone on top of an already existing restricted area. The rules are only slightly different and the physical characteristics of the surrounding waters does not change at

all. A Categorical Exclusion Determination and an Environmental Analysis Checklist are available in the docket at the location specified under the **ADDRESSES** portion of this rulemaking.

List of Subjects in 33 CFR Part 165

Harbors, Marine safety, Navigation (water), Reporting and recordkeeping requirements, Security measures, Waterways.

For the reasons discussed in the preamble, the Coast Guard amends 33 CFR part 165 as follows:

PART 165—REGULATED NAVIGATION AREAS AND LIMITED ACCESS AREAS

1. The authority citation for 33 CFR part 165 continues to read as follows:

Authority: [33 U.S.C. 1231; 50 U.S.C. 191, 33 CFR 1.05–1(g) 6.04–1, 6.04–6, 160.5; 49 CFR 1.46.]

2. A new § 165.1121 is added to read as follows:

§ 165.1121 Security Zone: Fleet Supply Center Industrial Pier, San Diego, CA.

(a) *Location.* The following area is a security zone: the waters of San Diego Bay extending approximately 100 feet from the north, west, and south sides of the Fleet Industrial Supply Center enclosed by lines connecting the following points: Beginning at 32°42′50″ N, 117°10′25″ W (Point A); to 32°42′50″ N, 117°10′38″ W (Point B); to 32°42′54″ N, 117°10′38″ W (Point C); to 32°42′54″ N, 117°10′25″ W (Point D).

(b) *Regulations.* In accordance with the general regulations in § 165.33, entry into the area of this zone is prohibited unless authorized by the Captain of the Port or the Commander, Navy Region Southwest. Section 165.33 also contains other general requirements.

(c) *Enforcement.* The U.S. Coast Guard may be assisted in the patrol and enforcement of this security zone by the U.S. Navy.

Dated: December 17, 2001.

E.R. Riutta,

Vice Admiral, U.S. Coast Guard, Commander, Eleventh Coast Guard District.

[FR Doc. 02–2361 Filed 1–30–02; 8:45 am]

BILLING CODE 4910–15–P

DEPARTMENT OF TRANSPORTATION

Coast Guard

33 CFR Part 165

[CGD11–01–011]

RIN 2115–AA97

Security Zone; Naval Amphibious Base, San Diego Bay, CA

AGENCY: Coast Guard, DOT.

ACTION: Final rule.

SUMMARY: The Coast Guard is creating a permanent security zone around the Naval Amphibious Base, Coronado, California, at the request of the U.S. Navy. This security zone will be established inside an already exiting restricted area defined by the U.S. Navy maintained buoys. The establishment of this security zone is needed to ensure the physical protection of naval vessels and their activities at Naval Amphibious Base, Coronado.

DATES: This rule becomes effective December 17, 2001.

ADDRESSES: Documents as indicated in this preamble are available for inspection or copying at the Coast Guard Marine Safety Office, 2716 North Harbor Drive, San Diego, CA 92101–1064 between 7:30 a.m. and 4 p.m., Monday through Friday, except Federal holidays.

FOR FURTHER INFORMATION CONTACT: Lieutenant Christopher Hochschild, Vessel Traffic Management Section, 11th Coast Guard District, telephone (510) 437–2940; e-mail: *chochschild@d11.uscg.mil.*

SUPPLEMENTARY INFORMATION:

Regulatory History

On June 13, 2001, the Coast Guard published a notice of proposed rulemaking (NPRM) entitled Security Zone; Naval Amphibious Base, San Diego Bay, CA in the **Federal Register** (66 FR 31872). The Coast Guard did not receive any letters commenting on the proposed rule. No public hearing was requested, and none was held.

In keeping with the requirements of 5 U.S.C. 553(d)(3), the Coast Guard finds that good cause exists for making this regulation effective immediately. The Coast Guard balanced the necessity for immediate implementation against the principles of fundamental fairness which require that all effected persons be afforded a reasonable time to prepare for the effective date of the rule.

In light of the events of September 11, 2001, the Coast Guard believes it is in the national interest to immediately implement the rule to avoid any gap in security zone coverage. The Coast Guard further believes that it has provided the public adequate notice and time to adapt to the security zone's implementation through the NPRM and the Navy's placement of small buoys marking the zone. In addition, the California Coastal Commission, in its Coast Zone Management Act Determination of October 16, 2001 discussed the minimal impact the zone will have on the public: ''These areas [including the subject security zone] are not typically used for recreational or commercial boating, and the restrictions will not adversely affect navigation or boating in San Diego Bay.''

The Coast Guard was delayed slightly in implementing this final rule because the attacks on the World Trade Center in New York and the Pentagon in Washington, DC caused the Coast Guard and the Navy to re-examine the whole scheme of security zones contemplated for San Diego to ensure they adequately met force protection and national defense needs.

Background and Purpose

The Coast Guard is creating a permanent security zone around the Naval Amphibious Base, Coronado, California, at the request of the U.S. Navy. The security zone will consist of the waters of San Diego Bay around the perimeter of the Naval Amphibious Base, extending approximately 100 yards out.

Currently, there is a restricted area around the Naval Amphibious Base, 33 CFR 334.860. The Navy believes that this restricted area, by itself, is insufficient to adequately safeguard its vessels and the military operations involving the base. The Navy has been reviewing all aspects of its anti-terrorism and force protection posture in response to the attack on the USS COLE. The attacks of September 11, 2001 and the heightened state of military alert resulting therefrom add substantial urgency to the creation of this security zone. This security zone will safeguard vessels moored at the Naval Amphibious Base and waterside facilities from destruction, loss, or injury from sabotage or other subversive acts, accidents, or other causes of a similar nature.

The creation of this security zone will also prevent recreational and commercial craft from interfering with military operations involving naval vessels and it will protect transiting recreational and commercial vessels, and their respective crews, from the navigational hazards posed by such military operations. Unlike the current

restricted area regulation, this security zone regulation will not allow vessels to transit through or anchor in the security zone unless authorized by the Captain of the Port, the Commander, Navy Region Southwest.

Vessels or persons violating this section would be subject to the penalties set forth in 50 U.S.C. 192 and 18 U.S.C. 3571: seizure and forfeiture of the vessel, a monetary penalty of not more than $250,000, and imprisonment for not more than 10 years.

The U.S. Coast Guard may be assisted in the patrol and enforcement of this security zone by the U.S. Navy.

Discussion of Comments and Changes

No comments were received during the notice of proposed rulemaking's comment period.

To reflect a naming change resulting from the Navy's 1998 regionalization process, the Coast Guard has made the following minor technical amendment to the final rule which did not appear in the NPRM: In paragraph (b) of the final rule, Commanding Officer, Naval Base San Diego has been re-named as the Commander, Navy Region Southwest. Also, a phrase was added at the end of the coordinates to clarify that the zone is enclosed.

Regulatory Evaluation

This final rule is not a ''significant regulatory action'' under section 3(f) of Executive Order 12866, Regulatory Planning and Review, and does not require an assessment of potential costs and benefits under section 6(a)(3) of that Order. The Office of Management and Budget has not reviewed it under that Order. It is not ''significant'' under the regulatory policies and procedures of the Department of Transportation (DOT) (44 FR 11040, February 26, 1979). This rule will have minimal additional impact on vessel traffic because it is being created inside an already existing restricted area codified at 33 CFR 334.860.

Small Entities

Under the Regulatory Flexibility Act (5 U.S.C. 601–612), we have considered whether this rule would have a significant economic impact on a substantial number of small entities. The term ''small entities'' comprises small businesses, not-for-profit organizations that are independently owned and operated and are not dominant in their fields, and governmental jurisdictions with populations of less than 50,000.

The Coast Guard certifies under 5 U.S.C. 605(b) that this final rule will not have a significant economic impact on a substantial number of small entities.

Collection of Information

This final rule calls for no new collection of information under the Paperwork Reduction Act (44 U.S.C. 3501–3520).

Federalism

The Coast Guard has analyzed this final rule under Executive Order 13132 and has determined that it does not have implications for federalism.

Unfunded Mandates Reform Act

The Unfunded Mandates Reform Act of 1995 (2 U.S.C. 1531–1538) governs the issuance of Federal regulations that require unfunded mandates. An unfunded mandate is a regulation that requires State, local, or tribal government or the private sector to incur direct costs without the Federal Government's having first provided the funds to pay those costs. This final rule does not impose an unfunded mandate.

Taking of Private Property

This final rule will not effect a taking of private property or otherwise have taking implications under Executive Order 12630, Governmental Actions and Interference with Constitutionally Protected Property Rights.

Civil Justice Reform

This final rule meets the applicable standards in sections 3(a) and 3(b)(2) of Executive Order 12988, Civil Justice Reform, to minimize litigation, eliminate ambiguity, and reduce burden.

Protection of Children

The Coast Guard has analyzed this final rule under Executive Order 13045, Protection of Children from Environmental Health Risks and Safety Risks. This rule is not an economically significant rule and does not create an environmental risk to health or risk to safety that may disproportionately affect children.

Indian Tribal Governments

This final rule does not have tribal implications under Executive Order 13175, Consultation and Coordination with Indian Tribal Governments, because it does not have a substantial direct effect on one or more Indian tribes, on the relationship between the Federal Government and Indian tribes, or on the distribution of power and responsibilities between the Federal Government and Indian tribes.

Energy Effects

The Coast Guard has analyzed this rule under Executive Order 13211, Actions Concerning Regulations That Significantly Affect Energy Supply, Distribution, or Use and has determined that it is not a ''significant energy action'' under that order because it is not a ''significant regulatory action'' under Executive Order 12866 and is not likely to have a significant adverse effect on the supply, distribution, or use of energy. It has not been designated by the Administrator of the Office of Information and Regulatory Affairs as a significant energy action. Therefore, it does not require a Statement of Energy Effects under Executive Order 13211.

Environment

The Coast Guard considered the environmental impact of this rule and concluded that under figure 2–1, paragraph (34)(g) of Commandant Instruction M16475.lD, this rule is categorically excluded from further environmental documentation. This rule creates a security zone inside an already existing restricted area and the physical characteristics of the surrounding waters is not altered. A Categorical Exclusion Determination and an Environmental Analysis Checklist are available in the docket at the location specified under the **ADDRESSES** portion of this rulemaking.

List of Subjects in 33 CFR Part 165

Harbors, Marine safety, Navigation (water), Reporting and record keeping requirements, Security measures, Waterways.

For the reasons discussed in the preamble, the Coast Guard amends 33 CFR part 165 as follows:

PART 165—REGULATED NAVIGATION AREAS AND LIMITED ACCESS AREAS

1. The authority citation for 33 CFR part 165 continues to read as follows:

Authority: 33 U.S.C. 1231; 50 U.S.C. 191, 33 CFR 1.05–1(g) 6.04–1, 6.04–6, 160.5; 49 CFR 1.46.

2. Add § 165.1120 to read as follows:

§ 165.1120 Security Zone; Naval Amphibious Base, San Diego, CA.

(a) *Location.* The following area is a security zone: the waters of San Diego Bay, enclosed by lines connecting the following points: Beginning at 32°40′30.0″ N, 117°10′03.0″ W (Point A); thence running northeasterly to 32°40′54.0″ N, 117°09′35.5″ W (Point B); thence running northeasterly to 32°40′55.0″ N, 117°09′27.0″ W (Point C); thence running southeasterly to

32°40′43.0″ N, 117°09′09.0″ W (Point D); thence running southerly to 32°40′39.0″ N, 117°09′08.0″ (Point E); thence running southwesterly to 32°40′30.0″ N, 117°09′12.9″ W (Point F); thence running a short distance to 32°40′29.0″ N, 117°09′14.0″ W (Point G); thence running southwesterly to 32°40′26.0″ N, 117°09′17.0″ W (Point H); thence running northwesterly to the shoreline to 32°40′ 31.0″ N, 117°09′ 22.5″ W (Point I), thence running along the shoreline to the beginning point.

(b) *Regulations.* In accordance with the general regulations in § 165.33 of this part, entry into the area of this zone is prohibited unless authorized by the Captain of the Port or the Commander, Navy Region Southwest.

(c) *Enforcement.* The U.S. Coast Guard may be assisted in the patrol and enforcement of this security zone by the U.S. Navy.

Dated: December 17, 2001.

E.R. Riutta,

Vice Admiral, Coast Guard, Commander, Eleventh Coast Guard District.

[FR Doc. 02–2360 Filed 1–30–02; 8:45 am]

BILLING CODE 4910–15–P

DEPARTMENT OF TRANSPORTATION

Coast Guard

33 CFR Part 165

[CGD11–98–003]

RIN 2115–AA97

Security Zone; San Diego Bay, CA

AGENCY: Coast Guard, DOT.

ACTION: Final rule.

SUMMARY: The Coast Guard is expanding the geographical boundaries of the permanent security zone at the newly-named Naval Base Coronado, California. This base was known as Naval Air Station North Island, but the Navy has recently changed its name. There were previously only two aircraft carriers home-ported at Naval Base Coronado; however, a third aircraft carrier has been designated to homeport there. The modification and expansion of this security zone is needed to ensure the physical protection of this third aircraft carrier at Naval Base Coronado.

DATES: This rule becomes effective December 17, 2001.

ADDRESSES: Documents as indicated in this preamble are available for inspection or copying at the Coast Guard Marine Safety Office, 2716 North Harbor Drive, San Diego, CA 92101–1064 between 7:30 a.m. and 4 p.m., Monday through Friday, except Federal holidays.

FOR FURTHER INFORMATION CONTACT: Lieutenant Christopher Hochschild, Vessel Traffic Management Section, 11th Coast Guard District, telephone (510) 437–2940; e-mail: *chochschild@d11.uscg.mil.*

SUPPLEMENTARY INFORMATION:

Regulatory History

The Coast Guard published a notice of proposed rulemaking (NPRM) on May 15, 1998 (63 FR 27019). That NPRM proposed to modify the Security Zone adjacent to Naval Air Station, North Island, 33 CFR 165.1104. No comments were received. Publication of the final rule was delayed because of the need for operational reassessment. Due to the length of time since publication of the NPRM, we published a supplemental notice of proposed rulemaking (SNPRM) on April 23, 2001 in the **Federal Register** (66 FR 20413) and provided an additional opportunity for comment on this rulemaking. We did not receive any letters commenting on the proposed rule. No public hearing was requested, and none was held. Two months after the SNPRM was published, technical amendments were made to Title 33 of the Code of Federal Regulations, including a redesignation of § 165.1105 as 165.1104 (66 FR 33637, 33642, June 25, 2001).

In keeping with the requirements of 5 U.S.C. 553(d)(3), the Coast Guard finds that good cause exists for making this regulation effective immediately. The Coast Guard balanced the necessity for immediate implementation against the principles of fundamental fairness which require that all effected persons be afforded a reasonable time to prepare for the effective date of the rule. In light of the events of September 11, 2001, the Coast Guard believes it is in the national interest to immediately implement the rule to avoid any gap in security zone coverage. The Coast Guard further believes that it has provided the public adequate notice and time to adapt to the security zone's implementation through the original NPRM, the supplemental NPRM and the Navy's placement of small buoys marking the zone. In addition, the California Coastal Commission, in its Coast Zone Management Act Determination of October 16, 2001 discussed the minimal impact the zone will have on the public: ''These areas [including the subject security zone] are not typically used for recreational or commercial boating, and the restrictions will not adversely affect navigation or boating in San Diego Bay.'' The Coast Guard was delayed slightly in implementing this final rule because the attacks on the World Trade Center in New York and the Pentagon in Washington, DC caused the Coast Guard and the Navy to re-examine the whole scheme of security zones contemplated for San Diego to ensure they adequately met force protection and national defense needs.

Background and Purpose

The Coast Guard is modifying the security zone, enlarging it to accommodate the home-porting of a new aircraft carrier at Naval Base Coronado. There were previously only two aircraft carriers home-ported there; however, a third aircraft carrier has been designated to homeport at Naval Base Coronado.

The security zone will be expanded at its northwest tip to the west by 0.144 square miles. It will be expanded in its mid-section to the north by 0.182 square miles.

The Navy requires the modification and expansion of this security zone to accommodate the home-porting of this third aircraft carrier. The expanded zone will prevent recreational and commercial craft from interfering with military operations involving all naval vessels home-ported at Naval Base Coronado, and it will protect transiting recreational and commercial vessels, and their respective crews, from the navigational hazards posed by such military operations. In addition, the Navy has been reviewing all aspects of its anti-terrorism and force protection posture in response to the attack on the USS COLE. The attacks of September 11, 2001 and the heightened state of military alert resulting therefrom add substantial urgency to the expansion of this security zone. The modification and expansion of this security zone will help safeguard vessels and waterside facilities from destruction, loss, or injury from sabotage or other subversive acts, accidents, or other causes of a similar nature. Entry into, transit through, or anchoring within this security zone is prohibited unless authorized by the Captain of the Port, the Commander, Naval Air Force, U.S. Pacific Fleet, the Commander, Navy Region Southwest, or the Commanding Officer, Naval Base Coronado.

Vessels or persons violating this section would be subject to the penalties set forth in 50 U.S.C. 192 and 18 U.S.C. 3571: seizure and forfeiture of the vessel, a monetary penalty of not more than $250,000, and imprisonment for not more than 10 years.

The U.S. Coast Guard may be assisted in the patrol and enforcement of this security zone by the U.S. Navy.

Discussion of Comments and Changes

No comments were received during the NPRM or SNPRM comment periods.

To reflect naming changes resulting from the Navy's 1998 regionalization process, the Coast Guard has made the following minor technical amendments that did not appear in the NPRM or SNPRM: In paragraph (a) of the final rule, Naval Air Station North Island has been re-named as Naval Base Coronado. In paragraph (b) of the final rule, the Commanding Officer, Naval Air Station North Island has been re-named as Commanding Officer, Naval Base Coronado.

Regulatory Evaluation

This rule is not a ''significant regulatory action'' under section 3(f) of Executive Order 12866, Regulatory Planning and Review, and does not require an assessment of potential costs and benefits under section 6(a)(3) of that Order. The Office of Management and Budget has not reviewed it under that Order. It is not ''significant'' under the regulatory policies and procedures of the Department of Transportation (DOT) (44 FR 11040, February 26, 1979). This rule will have minimal additional impact on vessel traffic because it is only a slight modification and expansion of the existing security zone codified at 33 CFR 165.1104.

Small Entities

Under the Regulatory Flexibility Act (5 U.S.C. 601–612), we have considered whether this rule would have a significant economic impact on a substantial number of small entities. The term ''small entities'' comprises small businesses, not-for-profit organizations that are independently owned and operated and are not dominant in their fields, and governmental jurisdictions with populations of less than 50,000.

The Coast Guard certifies under 5 U.S.C. 605(b) that this rule will not have a significant economic impact on a substantial number of small entities.

Collection of Information

This rule calls for no new collection of information under the Paperwork Reduction Act of (44 U.S.C. 3501–3520).

Federalism

The Coast Guard has analyzed this final rule under Executive Order 13132 and has determined that it does not have implications for federalism.

Unfunded Mandates Reform Act

The Unfunded Mandates Reform Act of 1995 (2 U.S.C. 1531–1538) governs the issuance of Federal regulations that require unfunded mandates. An unfunded mandate is a regulation that requires State, local, or tribal government or the private sector to incur direct costs without the Federal Government's having first provided the funds to pay those costs.

Taking of Private Property

This final rule will not effect a taking of private property or otherwise have taking implications under Executive Order 12630, Governmental Actions and Interference with Constitutionally Protected Property Rights.

Civil Justice Reform

This final rule meets applicable standards in sections 3(a) and 3(b)(2) of Executive Order 12988, Civil Justice Reform, to minimize litigation, eliminate ambiguity, and reduce burden.

Protection of Children

We have analyzed this rule under Executive Order 13045, Protection of Children from Environmental Health Risks and Safety Risks. This rule is not an economically significant rule and does not create an environmental risk to health or risk to safety that may disproportionately affect children.

Indian Tribal Governments

This final rule does not have tribal implications under Executive Order 13175, Consultation and Coordination with Indian Tribal Governments, because it does not have a substantial direct effect on one or more Indian tribes, on the relationship between the Federal Government and Indian tribes, or on the distribution of power and responsibilities between the Federal Government and Indian tribes.

Energy Effects

We have analyzed this rule under Executive Order 13211, Actions Concerning Regulations That Significantly Affect Energy Supply, Distribution, or Use. We have determined that it is not a ''significant energy action'' under that order because it is not a ''significant regulatory action'' under Executive Order 12866 and is not likely to have a significant adverse effect on the supply, distribution, or use of energy. It has not been designated by the Administrator of the Office of Information and Regulatory Affairs as a significant energy action. Therefore, it does not require a Statement of Energy Effects under Executive Order 13211.

Environment

We considered the environmental impact of this rule and concluded that under figure 2–1, paragraph (34)(g) of Commandant Instruction M16475.lD, this rule is categorically excluded from further environmental documentation. This rule is only a slight expansion of an area which already has existing restrictions, and it does not alter any physical state of the surrounding waters. A Categorical Exclusion Determination and an Environmental Analysis Checklist are available in the docket at the location specified under the **ADDRESSES** portion of this rulemaking.

List of Subjects in 33 CFR Part 165

Harbors, Marine safety, Navigation (water), Reporting and recordkeeping requirements, Security measures, Waterways.

For the reasons discussed in the preamble, the Coast Guard amends 33 CFR part 165 as follows:

PART 165—REGULATED NAVIGATION AREAS AND LIMITED ACCESS AREAS

1. The authority citation for 33 CFR part 165 continues to read as follows:

Authority: 33 U.S.C. 1231; 50 U.S.C. 191, 33 CFR 1.05–1(g), 6.04–1, 6.04–6, 160.5; 49 CFR 1.46.

2. In § 165.1104, revise paragraph (a) and (b) and add a new paragraph (c) to read as follows:

§ 165.1104 Security Zone: San Diego Bay, California.

(a) *Location.* The following area is a security zone: on the waters along the northern shoreline of Naval Base Coronado, the area enclosed by the following points: Beginning at 32° 42′53.0″ N, 117°11′45.0″ W (Point A); thence running northerly to 32° 42′ 55.5″ N, 117° 11′45.0″ W (Point B); thence running easterly to 32°42′55.0″ N, 117°11′30.5″ W (Point C); thence running southeasterly to 32°42′40.0″ N, 117°11′06.5″ W (Point D); thence running southerly to 32°42′37.5″ N, 117°11′07.0″ W (Point E); thence running southerly to 32°42′28.5″ N, 117°11′11.0″ W (Point F); thence running southeasterly to 32°42′22.0″ N, 117°10′48.0″ W (Point G); thence running southerly to 32°42′13.0″ N, 117° 10′51.0″ W (Point H); thence running generally northwesterly along the shoreline of Naval Base Coronado to the place of beginning.

(b) *Regulations.* In accordance with the general regulations in § 165.33 of this part, entry into the area of this zone is prohibited unless authorized by the Captain of the Port, the Commander, Naval Air Force, U.S. Pacific Fleet, the Commander, Navy Region Southwest, or the Commanding Officer, Naval Base

Coronado. Section 165.33 also contains other general requirements.

(c) *Enforcement.* The U.S. Coast Guard may be assisted in the patrol and enforcement of this security zone by the U.S. Navy.

Dated: December 17, 2001.

E.R. Riutta,

Vice Admiral, Coast Guard, Commander, Eleventh Coast Guard District.

[FR Doc. 02–2359 Filed 1–30–02; 8:45 am]

BILLING CODE 4910–15–U

DEPARTMENT OF TRANSPORTATION

Coast Guard

33 CFR Part 165

[CGD11–01–010]

RIN 2115–AA97

Security Zone; San Diego Bay

AGENCY: Coast Guard, DOT.

ACTION: Final rule.

SUMMARY: The Coast Guard is expanding the geographical boundaries of the permanent security zone at Naval Base, San Diego, California, at the request of the U.S. Navy. The proposed security zone will expand across the mouth of Chollas Creek. The modification and expansion of this security zone is needed to ensure the physical protection of naval vessels moored at Naval Base, San Diego.

DATES: This rule becomes effective December 17, 2001.

ADDRESSES: Documents as indicated in this preamble are available for inspection or copying at the Coast Guard Marine Safety Office, 2716 North Harbor Drive, San Diego, CA 92101–1064 between 7:30 a.m. and 4 p.m., Monday through Friday, except Federal holidays.

FOR FURTHER INFORMATION CONTACT: Lieutenant Christopher Hochschild, Vessel Traffic Management Section, 11th Coast Guard District, telephone (510) 437–2940; e-mail *chochschild@d11.uscg.mil.*

SUPPLEMENTARY INFORMATION:

Regulatory History

On April 23, 2001, the Coast Guard published a notice of proposed rulemaking (NPRM) entitled Security Zone; San Diego Bay in the **Federal Register** (66 FR 20412) to amend § 165.1102 in Title 33 of the Code of Federal Regulations (CFR). Two months later, technical amendments were made to Title 33 of the CFR, including a redesignation of § 165.1102 as 165.1101 (66 FR 33637, 33642, June 25, 2001). The Coast Guard did not receive any letters commenting on the proposed rule. No public hearing was requested, and none was held.

In keeping with the requirements of 5 U.S.C. 553(d)(3), the Coast Guard finds that good cause exists for making this regulation effective immediately. The Coast Guard balanced the necessity for immediate implementation against the principles of fundamental fairness which require that all effected persons be afforded a reasonable time to prepare for the effective date of the rule. In light of the events of September 11, 2001, the Coast Guard believes it is in the national interest to immediately implement the rule to avoid any gap in security zone coverage.

The Coast Guard further believes that it has provided the public adequate notice and time to adapt to the security zone's implementation through the NPRM. In addition, the California Coastal Commission, in its Coast Zone Management Act Determination of October 16, 2001 discussed the minimal impact the zone will have on the public: ''These areas [including the subject security zone] are not typically used for recreational or commercial boating, and the restrictions will not adversely affect navigation or boating in San Diego Bay.''

The Coast Guard was delayed slightly in implementing this final rule because the attacks on the World Trade Center in New York and the Pentagon in Washington, DC caused the Coast Guard and the Navy to re-examine the whole scheme of security zones contemplated for San Diego to ensure they adequately met force protection and national defense needs.

Background and Purpose

The Coast Guard is modifying the security zone, enlarging it by approximately 300 square yards to enclose the mouth of Chollas Creek so that unauthorized vessels or persons cannot transit into Chollas Creek.

The modification and expansion of this security zone is needed to ensure the physical protection of naval vessels moored in the area. The modification and expansion of this security zone will also prevent recreational and commercial craft from interfering with military operations involving all naval vessels home-ported at Naval Base, San Diego and it will protect transiting recreational and commercial vessels, and their respective crews, from the navigational hazards posed by such military operations. The Navy has been reviewing all aspects of its anti-terrorism and force protection posture in response to the attack on the USS COLE.

The attacks of September 11, 2001 and the heightened state of military alert resulting therefrom add substantial urgency to the creation of this security zone. The modification and expansion of this security zone will safeguard vessels and waterside facilities from destruction, loss, or injury from sabotage or other subversive acts, accidents, or other causes of a similar nature. Entry into, transit through, or anchoring within this security zone is prohibited unless authorized by the Captain of the Port or the Commander, Navy Region Southwest.

Vessels or persons violating this section would be subject to the penalties set forth in 50 U.S.C. 192 and 18 U.S.C. 3571: seizure and forfeiture of the vessel, a monetary penalty of not more than $250,000, and imprisonment for not more than 10 years.

The U.S. Coast Guard may be assisted in the patrol and enforcement of this security zone by the U.S. Navy.

Discussion of Comments and Changes

No comments were received during the NPRM comment period.

To reflect a naming change resulting from the Navy's 1998 regionalization process, the Coast Guard has made the following minor technical amendment to the final rule which did not appear in the NPRM: In paragraph (a) of the final rule, Naval Station, San Diego has been re-named as Naval Base, San Diego. In paragraph (b) of the final rule, Commander, Naval Base San Diego has been re-named as Commander, Navy Region Southwest. Also in paragraph (b), Commanding Officer, Naval Station, San Diego has been deleted.

Regulatory Evaluation

This rule is not a ''significant regulatory action'' under section 3(f) of Executive Order 12866, Regulatory Planning and Review, and does not require an assessment of potential costs and benefits under section 6(a)(3) of that Order. The Office of Management and Budget has not reviewed it under that Order. It is not ''significant'' under the regulatory policies and procedures of the Department of Transportation (DOT)(44 FR 11040, February 26, 1979). This rule will have minimal additional impact on vessel traffic because it is only a slight modification and expansion of the existing security zone codified at 33 CFR 165.1102.

Small Entities

Under the Regulatory Flexibility Act (5 U.S.C. 601–612), we have considered whether this rule would have a

significant economic impact on a substantial number of small entities. The term ''small entities'' comprises small businesses, not-for-profit organizations that are independently owned and operated and are not dominant in their fields, and governmental jurisdictions with populations of less than 50,000. The Coast Guard certifies under 5 U.S.C. 605(b) that this rule will not have a significant economic impact on a substantial number of small entities.

Collection of Information

This final rule calls for no new collection of information under the Paperwork Reduction Act (44 U.S.C. 3501–3520).

Federalism

The Coast Guard has analyzed this final rule under Executive Order 13132 and has determined that it does not have implications for federalism.

Unfunded Mandates Reform Act

The Unfunded Mandates Reform Act of 1995 (2 U.S.C. 1531–1538) governs the issuance of Federal regulations that require unfunded mandates. An unfunded mandate is a regulation that requires State, local, or tribal government or the private sector to incur direct costs without the Federal Government's having first provided the funds to pay those costs.

Taking of Private Property

This final rule will not affect a taking of private property or otherwise have taking implications under Executive Order 12630, Governmental Actions and Interference with Constitutionally Protected Property Rights.

Civil Justice Reform

This final rule meets the applicable standards in sections 3(a) and 3(b)(2) of Executive Order 12988, Civil Justice Reform, to minimize litigation, eliminate ambiguity, and reduce burden.

Protection of Children

The Coast Guard has analyzed this final rule under Executive Order 13045, Protection of Children from Environmental Health Risks and Safety Risks. This rule is not an economically significant rule and does not create an environmental risk to health or risk to safety that may disproportionately affect children.

Indian Tribal Governments

This final rule does not have tribal implications under Executive Order 13175, Consultation and Coordination with Indian Tribal Governments, because it does not have a substantial direct effect on one or more Indian tribes, on the relationship between the Federal Government and Indian tribes, or on the distribution of power and responsibilities between the Federal Government and Indian tribes.

Energy Effects

We have analyzed this rule under Executive Order 13211, Actions Concerning Regulations That Significantly Affect Energy Supply, Distribution, or Use. We have determined that it is not a ''significant energy action'' under that order because it is not a ''significant regulatory action'' under Executive Order 12866 and is not likely to have a significant adverse effect on the supply, distribution, or use of energy. It has not been designated by the Administrator of the Office of Information and Regulatory Affairs as a significant energy action. Therefore, it does not require a Statement of Energy Effects under Executive Order 13211.

Environment

We considered the environmental impact of this rule and concluded that under figure 2–1, paragraph (34)(g) of Commandant Instruction M16475.lD, this rule is categorically excluded from further environmental documentation. This rule is only a slight expansion of an area which already has the same restrictions discussed in the rule, and it does not alter any physical state of the surrounding waters. A Categorical Exclusion Determination and an Environmental Analysis Checklist are available in the docket at the location specified under the **ADDRESSES** portion of this rulemaking.

List of Subjects in 33 CFR Part 165

Harbors, Marine safety, Navigation (water), Reporting and recordkeeping requirements, Security measures, Waterways.

For the reasons discussed in the preamble, the Coast Guard amends 33 CFR part 165 as follows:

PART 165—REGULATED NAVIGATION AREAS AND LIMITED ACCESS AREAS

1. The authority citation for 33 CFR Part 165 continues to read as follows:

Authority: 33 U.S.C. 1231; 50 U.S.C. 191; 33 CFR 1.05–1(g) 6.04–1, 6.04–6, and 160.5; 49 CFR 1.46.

2. In § 165.1101, revise paragraphs (a) and (b) and add a new paragraph (c) to read as follows:

§ 165.1101 Security Zone: San Diego Bay, California.

(a) *Location.* The following area is a security zone: the water area within Naval Base, San Diego enclosed by the following points: Beginning at 32°41′16.5″ N, 117°08′01″ W (Point A); thence running southwesterly to 32°41′06″ N, 117°08′09.3″ W (Point B); thence running southeasterly along the U.S. Pierhead Line to 32°39′36.9″ N, 117°07′23.5″ W (Point C); thence running easterly to 32°39′38.5″ N, 117°07′06.5″ W (Point D); thence running generally northwesterly along the shoreline of the Naval Base to the place of beginning.

(b) In accordance with the general regulations in § 165.33 of this part, entry into the area of this zone is prohibited unless authorized by the Captain of the Port or the Commander, Navy Region Southwest. Section 165.33 also contains other general requirements.

(c) The U.S. Coast Guard may be assisted in the patrol and enforcement of this security zone by the U.S. Navy.

Dated: December 17, 2001.

E.R. Riutta,

Vice Admiral, Coast Guard, Commander, Eleventh Coast Guard District.

[FR Doc. 02–2358 Filed 1–30–02; 8:45 am]

BILLING CODE 4910–15–U

DEPARTMENT OF TRANSPORTATION

Coast Guard

33 CFR Part 165

[COTP Charleston–01–128]

RIN 2115–AA97

Security Zones; Ports of Charleston and Georgetown, SC

AGENCY: Coast Guard, DOT.

ACTION: Temporary final rule.

SUMMARY: The Coast Guard is establishing a temporary moving security zone 100 yards around all tank vessels, passenger vessels and military pre-positioned ships entering or departing the Ports of Charleston and Georgetown, South Carolina. We are also establishing temporary fixed security zones 100 yards around all tank vessels, passenger vessels and military pre-positioned ships when these vessels are moored in the Ports of Charleston and Georgetown, South Carolina. These security zones are needed for national security reasons to protect the public and ports from potential subversive acts. Entry into these zones is prohibited, unless specifically authorized by the Captain of the Port, Charleston, South

Carolina or his designated representative.

DATES: This regulation is effective from 4 a.m. on October 15, 2001 through 11:59 p.m. on June 15, 2002.

ADDRESSES: Comments and material received from the public, as well as documents indicated in this preamble as being available in the docket, are part of [COTP Charleston 01–128] and are available for inspection or copying at Marine Safety Office Charleston, 196 Tradd Street, Charleston, S.C. 29401 between 7:30 a.m. and 4 p.m. Monday through Friday, except Federal holidays.

FOR FURTHER INFORMATION CONTACT: LT James V. Mahney, Coast Guard Marine Safety Office Charleston, at (843) 724–7686.

SUPPLEMENTARY INFORMATION:

Regulatory Information

We did not publish a notice of proposed rulemaking (NPRM) for this regulation. Under 5 U.S.C. 553(b)(B), the Coast Guard finds that good cause exists for not publishing a NPRM. Publishing a NPRM and delaying this rule's effective date would be contrary to the public interest since immediate action is needed to protect the public, ports and waterways of the United States. The Coast Guard will issue a broadcast notice to mariners and place Coast Guard vessels in the vicinity of these zones to advise mariners of the restriction.

For the same reasons, under 5 U.S.C. 553(d)(3), the Coast Guard finds that good cause exists for making this rule effective less than 30 days after publication in the **Federal Register**.

Background and Purpose

Based on the September 11, 2001, terrorist attacks on the World Trade Center buildings in New York and the Pentagon in Arlington, Virginia, there is an increased risk that subversive activity could be launched by vessels or persons in close proximity to the Ports of Charleston and Georgetown, South Carolina, against tank vessels, cruise ships and military pre-positioned vessels entering, departing and moored within these ports. Military pre-positioned ships are U.S. commercial ships on long-term charter to the Military Sealift Command. They are utilized to transport military equipment and cargo. There will be Coast Guard and local police department patrol vessels on scene to monitor traffic through these areas.

The security zone for the Port of Charleston is activated when a subject vessel passes the Charleston entrance lighted whistle buoy C, at approximate position 32°39.36′ N, 79°40.54′ W. The security zone for the Port of Georgetown is activated when a subject vessel passes the lighted whistle buoy WB, at approximate position 33°11.36′ N, 79°05.12′ W. The zone for a vessel is deactivated when the vessel passes these buoys on its departure from port.

The Captain of the Port will notify the public via Marine Safety Radio Broadcast on VHF Marine Band Radio, Channel 22 (157.1 MHz) of all active security zones in the ports by identifying the names of the vessels around which the zones are centered. Entry into these security zones is prohibited, unless specifically authorized by the Captain of the Charleston, South Carolina.

Regulatory Evaluation

This rule is not a significant regulatory action under section 3(f) of Executive Order 12866, Regulatory Planning and Review, and does not require an assessment of potential costs and benefits under section 6(a)(3) of that order. The Office of Management and Budget has not reviewed it under that order. It is not significant under the regulatory policies and procedures of the Department of Transportation (DOT) (44 FR 11040; February 26, 1979) because vessels may be allowed to enter this temporary zone on a case by case basis with the authorization of the Captain of the Port.

Small Entities

Under the Regulatory Flexibility Act (5 U.S.C. 601–612), the Coast Guard considered whether this rule would have a significant economic effect upon a substantial number of small entities. ''Small entities'' include small businesses, not-for-profit organizations that are independently owned and operated and are not dominant in their fields, and governmental jurisdictions with populations of less than 50,000.

The Coast Guard certifies under 5 U.S.C. 605(b) that this rule will not have a significant economic impact on a substantial number of small entities because small entities may be allowed to enter on a case by case basis with the authorization of the Captain of the Port.

Assistance for Small Entities

Under section 213(a) of the Small Business Regulatory Enforcement Fairness Act of 1996 (Public Law 104–121), we offer to assist small entities in understanding the rule so that they can better evaluate its effects on them and participate in the rulemaking process. If the rule will affect your small business, organization, or government jurisdiction and you have questions concerning its provisions or options for compliance, please contact the person listed under **FOR FURTHER INFORMATION CONTACT** for assistance in understanding this rule.

Small businesses may send comments on the actions of Federal employees who enforce, or otherwise determine compliance with, Federal regulations to the Small Business and Agriculture Regulatory Enforcement Ombudsman and the Regional Small each agency's responsiveness to small business. If you wish to comment on actions by employees of the Coast Guard, call 1–888-REG-FAIR (1–888–734–3247).

Collection of Information

This rule calls for no new collection of information requirements under the Paperwork Reduction Act (44 U.S.C. 3501–3520).

Federalism

A rule has implication for federalism under Executive Order 13132, Federalism, if it has a substantial direct effect on State or local governments and would either preempt State law or impose a substantial direct cost of compliance on them. We have analyzed this rule under that Order and have determined that it does not have implications for federalism.

Unfunded Mandates Reform Act

The Unfunded Mandates Reform Act of 1995 (2 U.S.C. 1531–1538) requires Federal agencies to assess the effects of their discretionary regulatory actions. In particular, the Act addresses actions that may result in the expenditure by a State, local, or tribal government, in the aggregate, or by the private sector of $100,000,000 or more in any one year. Though this rule will not result in such an expenditure, we do discuss the effects of this rule elsewhere in this preamble.

Taking of Private Property

This rule will not effect a taking of private property or otherwise have taking implications under Executive Order 12630, Governmental Actions and Interference with Constitutionally Protected Property Rights.

Civil Justice Reform

This rule meets applicable standards in sections 3(a) and 3(b)(2) of Executive Order 12988, Civil Justice Reform, to minimize litigation, eliminate ambiguity, and reduce burden.

Environmental

The Coast Guard has considered the environmental impact of this rule and will prepare a categorical exclusion determination pursuant to Figure 2–1,

paragraph 34(g) of Commandant Instruction M16475.1D.

Protection of Children

We have analyzed this rule under Executive Order 13045, Protection of Children from Environmental Health Risks and Safety Risks. This rule is not an economically significant rule and does not concern an environmental risk to health or risk to safety that may disproportionately affect children.

Indian Tribal Governments

This rule does not have tribal implications under Executive Order 13175, Consultation and Coordination with Indian Tribal Governments, because it does not have a substantial direct effect on one or more Indian tribes, on the relationships between the Federal Government and Indian tribes, or on the distribution of power and responsibilities between the Federal Government and Indian tribes.

Energy Effects

We have analyzed this rule under Executive Order 13211, Actions Concerning Regulations That Significantly Affect Energy Supply, Distribution, or use. We have determined that it is not a ''significant energy action'' under Executive Order 12866 and is not likely to have a significant adverse effect on the supply, distribution, or use of energy. It has not been designated by the Administrator of the Office of Information and Regulatory Affairs as a significant energy action. Therefore, it does not require a Statement of Energy Effects under Executive Order 13211.

List of Subjects in 33 CFR Part 165

Harbors, Marine safety, Navigation (water), Reports and recordkeeping requirements, Security measures, Waterways.

For the reasons discussed in the preamble, the Coast Guard amends 33 CFR part 165, as follows:

PART 165—REGULATED NAVIGATION AREAS AND LIMITED ACCESS AREAS

1. The authority citation for part 165 continues to read as follows:

Authority: 33 U.S.C. 1231; 50 U.S.C. 191, 33 CFR 1.05–1(g), 6.04–1, 6.04–6, 160.5; 49 CFR 1.46.

2. A new temporary § 165.T07–128 is added to read as follows:

§ 165.T07–128 Security Zone; Ports of Charleston and Georgetown, South Carolina.

(a) *Regulated area.* (1) Temporary moving security zones are established 100 yards around all tank vessels, passenger vessels and military pre-positioned ships during transits entering or departing the ports of Charleston and Georgetown, South Carolina. These security zones are activated when a subject vessel passes: Charleston entrance lighted whistle buoy C, at approximate position 32°39.36′ N, 79°40.54′ W when entering the Port of Charleston; lighted whistle buoy WB, at approximate position 33°11.36′ N, 79°05.12′ W when entering the Port of Georgetown.

(2) Temporary fixed security zones are established 100 yards around all tank vessels, passenger vessels and military pre-positioned ships docked in the Ports of Charleston and Georgetown, South Carolina.

(b) *Regulations.* In accordance with the general regulations in § 165.33 of this part, entry into this zone is prohibited except as authorized by the Captain of the Port, or a Coast Guard commissioned, warrant, or petty officer designated by him. The Captain of the Port will notify the public via Marine Safety Radio Broadcast on VHF Marine Band Radio, Channel 13 and 16 (157.1 MHz) of all active security zones in port by identifying the names of the vessels around which they are centered.

(c) *Dates.* This section becomes effective at 4 a.m. on October 15, 2001 and will terminate at 11:59 p.m. on June 15, 2002.

Dated: October 15, 2001.

G.W. Merrick,

Commander, Coast Guard, Captain of the Port.

[FR Doc. 02–2357 Filed 1–30–02; 8:45 am]

BILLING CODE 4910–15–U

DEPARTMENT OF VETERANS AFFAIRS

38 CFR Part 17

RIN 2900–AK01

Compensated Work Therapy/ Transitional Residences Program

AGENCY: Department of Veterans Affairs.

ACTION: Final rule.

SUMMARY: This document amends VA's medical regulations to establish provisions regarding housing under the Compensated Work Therapy/ Transitional Residences program. These provisions are designed to ensure proper management, ensure reasonable payment rates for residents, and ensure that residents stay only for the time necessary to meet the intended goals.

DATES: Effective Date: January 31, 2002.

FOR FURTHER INFORMATION CONTACT: Jamie Ploppert, Program Specialist, Office of Psychosocial Rehabilitation Services (116D), Veterans Health Administration, 757–722–9961, ext. 1123 (this is not a toll-free number).

SUPPLEMENTARY INFORMATION: On March 6, 2001, VA published in the **Federal Register** a proposal to amend VA's Medical regulations to establish provisions regarding housing under the Compensated Work Therapy/ Transitional Residences program (66 FR 13461–63). No comments were received. Based on the rationale set forth in the proposed rule, we are adopting the provisions of the proposed rule as a final rule, with one change regarding the requirements for a house manager.

Under the proposed rule, a house manager was required to be a without-compensation employee of VA. However, upon further reflection, VA has determined that it is not necessary that each house manager be appointed as a without-compensation employee. Accordingly, this provision is removed.

OMB Review

This document has been reviewed by the Office of Management and Budget under Executive Order 12866.

Paperwork Reduction Act

This document contains no provisions constituting a collection of information under the Paperwork Reduction Act (44 U.S.C. 3501–3520).

Regulatory Flexibility Act

The Secretary hereby certifies that the adoption of this final rule does not have a significant economic impact on a substantial number of small entities as they are defined in the Regulatory Flexibility Act, 5 U.S.C. 601–612. This document affects individuals and does not affect small entities. Therefore, pursuant to 5 U.S.C. 605(b), this final rule is exempt from the initial and final regulatory flexibility analysis requirement of sections 603 and 604.

List of Subjects in 38 CFR Part 17

Administrative practice and procedure, Alcohol abuse, Alcoholism, Claims, Day care, Dental health, Drug abuse, Foreign relations, Government contracts, Grant programs-health, Government programs-veterans, Health care, Health facilities, Health professions, Health records, Homeless, Medical and dental schools, Medical devices, Medical research, Mental health programs, Nursing home care, Philippines, Reporting and recordkeeping requirements, Scholarships and fellowships, Travel and transportation expenses, Veterans.

Approved: November 13, 2001.

Anthony J. Principi,

Secretary of Veterans Affairs.

For the reasons set forth in the preamble, 38 CFR part 17 is amended to read as follows:

PART 17—MEDICAL

1. The authority citation for part 17 continues to read as follows:

Authority: 38 U.S.C. 501, 1721, unless otherwise noted.

2. Redesignate § 17.49 as new § 17.48.

3. Add a new § 17.49 to read as follows:

§ 17.49 Compensated Work Therapy/Transitional Residences program.

(a) This section sets forth requirements for persons residing in housing under the Compensated Work Therapy/Transitional Residences program.

(b) House managers shall be responsible for coordinating and supervising the day-to-day operations of the facilities. The local VA program coordinator shall select each house manager and may give preference to an individual who is a current or past resident of the facility or the program. A house manager must have the following qualifications:

(1) A stable, responsible and caring demeanor;

(2) Leadership qualities including the ability to motivate;

(3) Effective communication skills including the ability to interact;

(4) A willingness to accept feedback;

(5) A willingness to follow a chain of command.

(c) Each resident admitted to the Transitional Residence, except for a house manager, must also be in the Compensated Work Therapy program.

(d) Each resident, except for a house manager, must bi-weekly, in advance, pay a fee to VA for living in the housing. The local VA program coordinator will establish the fee for each resident in accordance with the provisions of paragraph (d)(1) of this section.

(1) The total amount of actual operating expenses of the residence (utilities, maintenance, furnishings, appliances, service equipment, all other operating costs) for the previous fiscal year plus 15 percent of that amount equals the total operating budget for the current fiscal year. The total operating budget is to be divided by the average number of beds occupied during the previous fiscal year and the resulting amount is the average yearly amount per bed. The bi-weekly fee shall equal 1/26th of the average yearly amount per bed, except that a resident shall not, on average, pay more than 30 percent of their gross CWT (Compensated Work Therapy) bi-weekly earnings. The VA program manager shall, bi-annually, conduct a review of the factors in this paragraph for determining resident payments. If he or she determines that the payments are too high or too low by more than 5 percent of the total operating budget, he or she shall recalculate resident payments under the criteria set forth in this paragraph, except that the calculations shall be based on the current fiscal year (actual amounts for the elapsed portion and projected amounts for the remainder).

(2) If the revenues of a residence do not meet the expenses of the residence resulting in an inability to pay actual operating expenses, the medical center of jurisdiction shall provide the funds necessary to return the residence to fiscal solvency in accordance with the provisions of this section.

(e) The length of stay in housing under the Compensated Work Therapy/Transitional Residences program is based on the individual needs of each resident, as determined by consensus of the resident and his/her VA Clinical Treatment team. However, the length of stay should not exceed 12 months.

(Authority: 38 U.S.C.1772)

[FR Doc. 02–2364 Filed 1–30–02; 8:45 am]

BILLING CODE 8320–01–P

ENVIRONMENTAL PROTECTION AGENCY

40 CFR Part 52

[AL–200213; FRL–7131–5]

Approval and Promulgation of Air Quality Implementation Plans; Alabama Update to Materials Incorporated by Reference

AGENCY: Environmental Protection Agency (EPA).

ACTION: Final rule; notice of administrative change.

SUMMARY: EPA is updating the materials submitted by Alabama that are incorporated by reference (IBR) into the State implementation plan (SIP). The regulations affected by this update have been previously submitted by the State agency and approved by EPA. This update affects the SIP materials that are available for public inspection at the Office of the Federal Register (OFR), Office of Air and Radiation Docket and Information Center, and the Regional Office.

EFFECTIVE DATE: This action is effective January 31, 2002.

ADDRESSES: SIP materials which are incorporated by reference into 40 CFR part 52 are available for inspection at the following locations: Environmental Protection Agency, Region 4, 61 Forsyth Street, SW, Atlanta, GA 30303; Office of Air and Radiation Docket and Information Center, Air Docket (Mail Code 6102), 401 M Street., SW., Washington, DC. 20460, and Office of the Federal Register, 800 North Capitol Street, NW, Suite 700, Washington, DC.

FOR FURTHER INFORMATION CONTACT: Mr. Sean Lakeman at the above Region 4 address or at (404) 562–9043.

SUPPLEMENTARY INFORMATION: The SIP is a living document which the State can revise as necessary to address the unique air pollution problems in the state. Therefore, EPA from time to time must take action on SIP revisions containing new and/or revised regulations as being part of the SIP. On May 22, 1997, (62 FR 27968) EPA revised the procedures for incorporating by reference Federally-approved SIPs, as a result of consultations between EPA and OFR. The description of the revised SIP document, IBR procedures and ''Identification of plan'' format are discussed in further detail in the May 22, 1997, **Federal Register** document. On December 22, 1998, EPA published a document in the **Federal Register** (63 FR 70669) beginning the new IBR procedure for Alabama. In this document EPA is doing the first update to the material being IBRed.

EPA has determined that today's rule falls under the ''good cause'' exemption in section 553(b)(3)(B) of the Administrative Procedures Act (APA) which, upon finding ''good cause,'' authorizes agencies to dispense with public participation and section 553(d)(3) which allows an agency to make a rule effective immediately (thereby avoiding the 30-day delayed effective date otherwise provided for in the APA). Today's rule simply codifies provisions which are already in effect as a matter of law in Federal and approved State programs. Under section 553 of the APA, an agency may find good cause where procedures are ''impractical, unnecessary, or contrary to the public interest.'' Public comment is ''unnecessary'' and ''contrary to the public interest'' since the codification only reflects existing law. Immediate notice in the CFR benefits the public by updating citations.

I. Administrative Requirements

Under Executive Order 12866 (58 FR 51735, October 4, 1993), this action is not a ''significant regulatory action'' and therefore is not subject to review by the

Office of Management and Budget. For this reason, this action is also not subject to Executive Order 13211, ''Actions Concerning Regulations That Significantly Affect Energy Supply, Distribution, or Use'' (66 FR 28355, May 22, 2001). This action merely approves state law as meeting Federal requirements and imposes no additional requirements beyond those imposed by state law. Accordingly, the Administrator certifies that this rule will not have a significant economic impact on a substantial number of small entities under the Regulatory Flexibility Act (5 U.S.C. 601 et seq.). Because this rule approves pre-existing requirements under state law and does not impose any additional enforceable duty beyond that required by state law, it does not contain any unfunded mandate or significantly or uniquely affect small governments, as described in the Unfunded Mandates Reform Act of 1995 (Public Law 104–4).

This rule also does not have tribal implications because it will not have a substantial direct effect on one or more Indian tribes, on the relationship between the Federal Government and Indian tribes, or on the distribution of power and responsibilities between the Federal Government and Indian tribes, as specified by Executive Order 13175 (65 FR 67249, November 9, 2000). This action also does not have Federalism implications because it does not have substantial direct effects on the States, on the relationship between the national government and the States, or on the distribution of power and responsibilities among the various levels of government, as specified in Executive Order 13132 (64 FR 43255, August 10, 1999). This action merely approves a state rule implementing a Federal standard, and does not alter the relationship or the distribution of power and responsibilities established in the Clean Air Act. This rule also is not subject to Executive Order 13045 ''Protection of Children from Environmental Health Risks and Safety Risks'' (62 FR 19885, April 23, 1997), because it is not economically significant.

In reviewing SIP submissions, EPA's role is to approve state choices, provided that they meet the criteria of the Clean Air Act. In this context, in the absence of a prior existing requirement for the State to use voluntary consensus standards (VCS), EPA has no authority to disapprove a SIP submission for failure to use VCS. It would thus be inconsistent with applicable law for EPA, when it reviews a SIP submission, to use VCS in place of a SIP submission that otherwise satisfies the provisions of the Clean Air Act. Thus, the requirements of section 12(d) of the National Technology Transfer and Advancement Act of 1995 (15 U.S.C. 272 note) do not apply. This rule does not impose an information collection burden under the provisions of the Paperwork Reduction Act of 1995 (44 U.S.C. 3501 et seq.).

The Congressional Review Act, 5 U.S.C. 801 et seq., as added by the Small Business Regulatory Enforcement Fairness Act of 1996, generally provides that before a rule may take effect, the agency promulgating the rule must submit a rule report, which includes a copy of the rule, to each House of the Congress and to the Comptroller General of the United States. EPA will submit a report containing this rule and other required information to the U.S. Senate, the U.S. House of Representatives, and the Comptroller General of the United States prior to publication of the rule in the **Federal Register**. A major rule cannot take effect until 60 days after it is published in the **Federal Register**. This action is not a ''major rule'' as defined by 5 U.S.C. 804(2).

Under section 307(b)(1) of the Clean Air Act, petitions for judicial review of this action must be filed in the United States Court of Appeals for the appropriate circuit by April 1, 2002. Filing a petition for reconsideration by the Administrator of this final rule does not affect the finality of this rule for the purposes of judicial review nor does it extend the time within which a petition for judicial review may be filed, and shall not postpone the effectiveness of such rule or action. This action may not be challenged later in proceedings to enforce its requirements. (See section 307(b)(2).)

List of Subjects in 40 CFR Part 52

Environmental protection, Air pollution control, Carbon monoxide, Hydrocarbons, Incorporation by reference, Intergovernmental relations, Lead, Nitrogen dioxide, Ozone, Particulate matter, Reporting and recordkeeping requirements, Sulfur oxides.

Dated: January 11, 2002.

A. Stanley Meiburg,

Acting Regional Administrator, Region 4.

Chapter I, title 40, Code of Federal Regulations, is amended as follows:

PART 52—[AMENDED]

1. The authority for citation for part 52 continues to read as follows:

Authority: 42 U.S.C. 7401 et seq.

Subpart B—Alabama

2. Section 52.50 is amended by revising paragraph (b) to read as follows:

§ 52.50 Identification of plan.

* * * * *

(b) Incorporation by reference.

(1) Material listed in paragraphs (c) and (d) of this section with an EPA approval date prior to January 1, 2002, was approved for incorporation by reference by the Director of the Federal Register in accordance with 5 U.S.C. 552(a) and 1 CFR part 51. Material is incorporated as it exists on the date of the approval, and notice of any change in the material will be published in the **Federal Register**. Entries in paragraphs (c) and (d) of this section with EPA approval dates on or after January 1, 2002, will be incorporated by reference in the next update to the SIP compilation.

(2) EPA Region 4 certifies that the rules/regulations provided by EPA in the SIP compilation at the addresses in paragraph (b)(3) of this section are an exact duplicate of the officially promulgated State rules/regulations which have been approved as part of the State implementation plan as of January 1, 2002.

(3) Copies of the materials incorporated by reference may be inspected at the Region 4 EPA Office at 61 Forsyth Street, SW., Atlanta, GA 30303; the Office of the Federal Register, 800 North Capitol Street, NW., Suite 700, Washington, DC.; or at the EPA, Air and Radiation Docket and Information Center, Air Docket (Mail Code 6102), 401 M Street., SW., Washington, DC. 20460.

* * * * *

[FR Doc. 02–2381 Filed 1–30–02; 8:45 am]

BILLING CODE 6560–50–P

ENVIRONMENTAL PROTECTION AGENCY

40 CFR Part 52

[OH 103–1a; FRL–7114–1]

Approval and Promulgation of Implementation Plans; Ohio

AGENCY: Environmental Protection Agency (EPA).

ACTION: Direct final rule.

SUMMARY: On March 20, 2000, Ohio submitted certain revisions to the State Implementation Plan (SIP) for sulfur dioxide (SO_2) for several Ohio counties. Today, EPA is rulemaking on portions of this submittal which were not addressed in a June 5, 2000, rulemaking

(see 65 FR 35577). In today's action, EPA is approving revised emission limits for sources in Butler, Pickaway, and Lake Counties. In addition, EPA is approving selected parts of the State's rules for compliance schedules and test methods. In conjunction with these actions, EPA is rescinding federally promulgated SO_2 emission limits for Butler, Lorain, Coshocton, Gallia, and Lake Counties, since these limitations have been superseded by approved State limits.

DATES: This ''direct final'' rule is effective on April 1, 2002, unless EPA receives adverse written comments by March 4, 2002. If EPA receives adverse written comments, EPA will publish a timely withdrawal of the rule in the **Federal Register** and will inform the public that the rule will not take effect.

ADDRESSES: You may send written comments to: J. Elmer Bortzer, Chief, Regulation Development Section, Air Programs Branch (AR–18J), Environmental Protection Agency, 77 West Jackson Boulevard, Chicago, Illinois 60604.

Copies of the revision request are available for inspection at the following address: Environmental Protection Agency, Region 5, Air and Radiation Division, 77 West Jackson Boulevard, Chicago, Illinois 60604. (We recommend that you telephone Phuong Nguyen, Environmental Scientist, at (312) 886–6701 before visiting the Region 5 office.)

FOR FURTHER INFORMATION CONTACT: Phuong Nguyen at (312) 886–6701.

SUPPLEMENTARY INFORMATION: Throughout this document wherever ''we'' ''us'' or ''our'' are used we mean EPA. This supplemental information section is organized as follows:

I. What rules are EPA addressing today?
II. Summary and analysis of the state rules.
  1. Butler County (OAC 3745–18–15)
  2. Pickaway County (OAC 3745–18–71)
  3. Lake County (OAC 3745–18–49)
  4. Compliance Time Schedules (OAC 3745–18–03)
  5. Measurement Methods and Procedures (OAC 3745–18–04)
III. Federal Implementation Plan (FIP) replacement.
IV. What action is EPA taking?
  1. Action on State rules.
  2. Action on Federal Implementation Plan (FIP).
V. Administrative requirements.

I. What Rules Are EPA Addressing Today?

On March 20, 2000, Ohio submitted several revised SO_2 rules to EPA. EPA approved the Coshocton, Gallia, and Lorain county portions of this submittal on June 5, 2000 (65 FR 35577). Today EPA is taking action on the remaining elements of the March 20, 2000 submittal. The rules that EPA is addressing are listed in the following table.

TABLE 1.—RULES BEING ADDRESSED IN THIS ACTION

State rule	Rule subject
OAC 3745–18–15	Butler County.
OAC 3745–18–71	Pickaway County.
OAC 3745–18–49	Lake County.
OAC 3745–18–03	Compliance Time Schedules.
OAC 3745–18–04	Measurement Methods and Procedures.
40 CFR 52.1881(b) ...	Removal of Superseded Parts of the FIP.

EPA has prepared a technical support document (TSD) dated September 5, 2001 discussing these rules, providing the history of related rulemaking and a more detailed analysis of the State's submittal.

II. Summary and Analysis of the State Rules

1. Butler County (OAC 3745–18–15)

The TSD describes the history of SO_2 limitations in Butler County. This history includes federal promulgation of limits and the rescission of most of these limits, as well as a State submittal of comparable rules that EPA disapproved. The recent State submittal is intended to fill the gap in federally enforceable rules. The TSD also describes modeling conducted by Ohio EPA to assess the impact of the Butler county revisions.

EPA analyzed the State's submittal by comparing it with existing federally enforceable limits. Due to historical rule rescissions, existing federally enforceable limits still apply to only a few relatively insignificant sources in the County. By contrast, Ohio's new limits establish source-specific limits for the full range of significant sources in the County. For some sources, the new limits are slightly less stringent. However, these sources are relatively insignificant in comparison to the sources that now have limits and were previously unregulated. EPA expects the tightening effect of establishing limits on the most significant sources will far outweigh the slight relaxation in limits for some sources, particularly in the areas most likely to observe exceedances of the National Ambient Air Quality Standards (NAAQS) but also in most, if not all, of the rest of the County. Consequently, EPA is approving the full set of rules Ohio submitted for Butler County on the basis of their effect of strengthening the SIP's protection against NAAQS violations.

2. Pickaway County (OAC 3745–18–71)

The TSD explains the history of SO_2 modeling conducted to assess the impact in Pickaway County of new sources in southern Franklin County. As a result of the modeling, Ohio adopted a lower emission limit for boilers at the Picway Generating Plant. Ohio changed the allowable emission limit for the Columbus Southern Power Company, Picway Generating Plant boiler numbers 7, 8, and 9 from 9.9 to 5.6 pounds of the sulfur dioxide per Million British Thermal Unit (MM BTU) actual heat input for each boiler. EPA reviewed the modeling and concurred that an emission limit of 5.6 pounds of sulfur dioxide per MM BTU is adequate to meet the NAAQS. EPA, therefore, approves this rule revision.

3. Lake County (OAC 3745–18–49)

The TSD describes the history of SO_2 emission limits in Lake County. This history includes the approval of State-adopted limits which were covered in the March 17, 1999 rulemaking (64 FR 13071). The TSD also discusses the lawsuit involved with the Painesville Municipal Plant. This lawsuit concluded with a consent decree which required Painesville to physically modify the unit to derate its capacity to below the new source performance standards (NSPS) threshold (250 MMBTU per hour). The consent decree also established an interim limit of 4.7 pounds per MM BTU and called for establishment of a final limit pursuant to modeling.

EPA has previously approved modeling for this area of Lake County. The modeling showed attainment based, in part, on a limit of 5.7 pounds per MM BTU for all units at the Painesville Municipal Plant. EPA previously approved application of this limit to other boilers at the Painesville Municipal Plant besides boiler number 5. EPA is relying on that same modeling as a basis for approving the same limit for boiler number 5.

4. Compliance Time Schedules (OAC 3745–18–03)

Rule OAC 3745–18–03 addresses the compliance time and schedules for sources in the entire State of Ohio. The TSD explains in detail why EPA did not rulemake on the entire 1979 version of this rule in January 27, 1981 (46 FR 8482).

In today's action, EPA is approving the overall compliance deadline for Butler County (OAC 3745–18–03(A)(2)(d)) as well as certification and permit application requirements for sources in Butler County (OAC 3745–18–03(B)(8)). EPA is also approving the compliance time schedules for sources in both Butler County (3745–18–03(C)(6)), and Pickaway County (3745–18–03(C)(10)).

In a previous rulemaking approving the Lorain County limits, EPA inadvertently failed to approve the associated compliance provisions, in particular, the certification and permit application requirements for U.S. Steel Corporation in Lorain County (OAC 3745–18–03(B)(4)). EPA is approving these provisions today.

5. Measurement Methods and Procedures (OAC 3745–18–04)

Rule OAC 3745–18–04 addresses the measurement methods and procedures for sources in the entire State of Ohio. The TSD describes the history and provides a more detailed review of these rule revisions.

In today's action, EPA approves the test methods and procedures for sources in Butler County (OAC 3745–18–04(D)(9)). The rule allows sources which are burning coal in Butler County to be able to use stack tests, continuous emission monitoring, or coal sampling and analysis as the methods for determining compliance with the applicable SO_2 emission limits. EPA also approves paragraph OAC 3745–18–04(E)(7) which specifies the test methods and procedures for determining compliance with the applicable SO_2 limits for any boiler burning fuel other than coal in Butler County.

In addition, Ohio changed paragraphs (D)(7), (D)(8), and (G) for sources in Hamilton County, which EPA had approved in 1994 (59 FR 43287). The revised rule OAC 3745–18–04 changes a conversion factor in the emission rate calculation for solid fuel in Hamilton County from 1.95 to 1.9. Hamilton County sources would now apply the same conversion factor as other sources in the State. EPA believes this is an appropriate revision to the SIP.

Finally, EPA is approving an amendment in OAC 3745–18–04(F)(4). The amendment increases the cut point from 0.5 to 0.6 pounds of SO_2 per million standard cubic feet in natural gas that has a heat content greater than 950 BTU per standard cubic feet. EPA believes that such an emissions increase is insignificant; therefore, we approve this revision.

III. FIP Replacement

Several of the FIP limits that EPA promulgated in 1976 have become superseded by approval of corresponding state rules. EPA approved State adopted emission limits for Lorain, Coshocton, and Gallia on June 5, 2000 (65 FR 35577), and for Lake County on March 30, 1998 (63 FR 15091). In this action, EPA is approving the emission limits for Butler County. These state-adopted emission limits supersede the FIP limits. Therefore, EPA rescinds the federal promulgated emission limitations for SO_2 for Butler, Lorain, Coshocton, Gallia, and Lake Counties since the FIP limits are no longer needed.

IV. What Action Is EPA Taking?

A. Action on State Rules

In this action, EPA is approving the emission limits for specific sources in Butler (OAC 3745–18–15), Pickaway (OAC 3745–18–71), and Lake (OAC 3745–1849) Counties. In addition, EPA is approving the overall compliance deadlines, certification and permit application, and compliance time schedule for Butler (OAC 3745–18–03(A)(2)(d), OAC 3745–18–03(B)(8), and OAC 3745–18–03 (C)(6)), Pickaway Counties (OAC 3745–18–03(C)(10)).

EPA is also approving the certification and permit application for U.S. Steel Corporation in Lorain County (OAC 3745–18–03(B)(4)).

Finally, EPA is approving the test methods and procedures for sources in Butler County (OAC 3745–18–04 (D)(9), OAC 3745–18–04(D)(8), OAC 3745–18–04(E)(7)). EPA is also approving a change in the sulfur to sulfur-dioxide conversion factor used in Hamilton County (OAC 3745–18–04–(F)(1)), as well as a change in the sulfur content used to define a de minimis exemption for natural gas (OAC 3745–18–04(F)(4)).

B. Action on FIP

EPA is rescinding the federal promulgated emission limits for SO_2 sources in Butler, Lorain, Coshocton, Gallia, and Lake Counties codified at 40 CFR 52.1881(b)(12),(14),(17),(18), and (20), respectively.

V. Administrative Requirements

A. Executive Order 12866

The Office of Management and Budget (OMB) has exempted this regulatory action from Executive Order 12866, entitled ''Regulatory Planning and Review.''

B. Executive Order 13045

Protection of Children from Environmental Health Risks and Safety Risks (62 FR 19885, April 23, 1997), applies to any rule that: (1) Is determined to be ''economically significant'' as defined under Executive Order 12866, and (2) concerns an environmental health or safety risk that EPA has reason to believe may have a disproportionate effect on children. If the regulatory action meets both criteria, the Agency must evaluate the environmental health or safety effects of the planned rule on children, and explain why the planned regulation is preferable to other potentially effective and reasonably feasible alternatives considered by the Agency.

This rule is not subject to Executive Order 13045 because it does not involve decisions intended to mitigate environmental health or safety risks.

C. Executive Order 13132

Federalism (64 FR 43255, August 10, 1999) revokes and replaces Executive Orders 12612 (Federalism) and 12875 (Enhancing the Intergovernmental Partnership). Executive Order 13132 requires EPA to develop an accountable process to ensure ''meaningful and timely input by State and local officials in the development of regulatory policies that have federalism implications.'' ''Policies that have federalism implications'' is defined in the Executive Order to include regulations that have ''substantial direct effects on the States, on the relationship between the national government and the States, or on the distribution of power and responsibilities among the various levels of government.'' Under Executive Order 13132, EPA may not issue a regulation that has federalism implications, that imposes substantial direct compliance costs, and that is not required by statute, unless the Federal government provides the funds necessary to pay the direct compliance costs incurred by State and local governments, or EPA consults with State and local officials early in the process of developing the proposed regulation. EPA also may not issue a regulation that has federalism implications and that preempts State law unless the Agency consults with State and local officials early in the process of developing the proposed regulation.

This rule will not have substantial direct effects on the States, on the relationship between the national government and the States, or on the distribution of power and responsibilities among the various levels of government, as specified in Executive Order 13132, because it merely approves a state rule implementing a federal standard, and

does not alter the relationship or the distribution of power and responsibilities established in the Clean Air Act. Thus, the requirements of section 6 of the Executive Order do not apply to this rule.

D. Executive Order 13175

This final rule does not have tribal implications. It will not have substantial direct effects on tribal governments, on the relationship between the Federal government and Indian tribes, or on the distribution of power and responsibilities between the Federal government and Indian tribes, as specified in Executive Order 13175. Thus, Executive Order 13175 does not apply to this rule.

E. Executive Order 13211

This rule is not subject to Executive Order 13211, ''Actions Concerning Regulations That Significantly Affect Energy Supply, Distribution, or use'' (66 FR 28355, May 22, 2001) because it is not a significant regulation action under Executive Order 12866.

F. Regulatory Flexibility

The Regulatory Flexibility Act (RFA) generally requires an agency to conduct a regulatory flexibility analysis of any rule subject to notice and comment rulemaking requirements unless the agency certifies that the rule will not have a significant economic impact on a substantial number of small entities. Small entities include small businesses, small not-for-profit enterprises, and small governmental jurisdictions.

This rule will not have a significant impact on a substantial number of small entities because SIP approvals under section 110 and subchapter I, part D of the Clean Air Act do not create any new requirements but simply approve requirements that the State is already imposing. Therefore, because the Federal SIP approval does not create any new requirements, I certify that this action will not have a significant economic impact on a substantial number of small entities. Moreover, due to the nature of the Federal-State relationship under the Clean Air Act, preparation of flexibility analysis would constitute Federal inquiry into the economic reasonableness of state action. The Clean Air Act forbids EPA to base its actions concerning SIPs on such grounds. *Union Electric Co.,* v. *U.S. EPA,* 427 U.S. 246, 255–66 (1976); 42 U.S.C. 7410(a)(2).

G. Unfunded Mandates

Under sections 202 of the Unfunded Mandates Reform Act of 1995 (''Unfunded Mandates Act''), signed into law on March 22, 1995, EPA must prepare a budgetary impact statement to accompany any proposed or final rule that includes a Federal mandate that may result in estimated costs to State, local, or tribal governments in the aggregate; or to the private sector, of $100 million or more. Under section 205, EPA must select the most cost-effective and least burdensome alternative that achieves the objectives of the rule and is consistent with statutory requirements. Section 203 requires EPA to establish a plan for informing and advising any small governments that may be significantly or uniquely impacted by the rule.

EPA has determined that the approval action promulgated does not include a Federal mandate that may result in estimated costs of $100 million or more to either State, local, or tribal governments in the aggregate, or to the private sector. This Federal action approves pre-existing requirements under State or local law, and imposes no new requirements. Accordingly, no additional costs to State, local, or tribal governments, or to the private sector, result from this action.

H. Submission to Congress and the Comptroller General

The Congressional Review Act, 5 U.S.C. 801 *et seq.*, as added by the Small Business Regulatory Enforcement Fairness Act of 1996, generally provides that before a rule may take effect, the agency promulgating the rule must submit a rule report, which includes a copy of the rule, to each House of the Congress and to the Comptroller General of the United States. EPA will submit a report containing this rule and other required information to the U.S. Senate, the U.S. House of Representatives, and the Comptroller General of the United States prior to publication of the rule in the **Federal Register**. A major rule cannot take effect until 60 days after it is published in the **Federal Register**. This action is not a ''major rule'' as defined by 5 U.S.C. 804(2). This rule will be effective April 1, 2002, unless EPA receives adverse written comments by March 4, 2002.

I. National Technology Transfer and Advancement Act

Section 12 of the National Technology Transfer and Advancement Act (NTTAA) of 1995 requires Federal agencies to evaluate existing technical standards when developing a new regulation. To comply with NTTAA, EPA must consider and use ''voluntary consensus standards'' (VCS) if available and applicable when developing programs and policies unless doing so would be inconsistent with applicable law or otherwise impractical.

The EPA believes that VCS are inapplicable to this action. Today's action does not require the public to perform activities conducive to the use of VCS.

J. Petitions for Judicial Review

Under section 307(b)(1) of the Clean Air Act, petitions for judicial review of this action must be filed in the United States Court of Appeals for the appropriate circuit by April 1, 2002. Filing a petition for reconsideration by the Administrator of this final rule does not affect the finality of this rule for the purposes of judicial review nor does it extend the time within which a petition for judicial review may be filed, and shall not postpone the effectiveness of such rule or action. This action may not be challenged later in proceedings to enforce its requirements. (See section 307(b)(2).)

List of Subjects in 40 CFR Part 52

Environmental protection, Air pollution control, Incorporation by reference, Intergovernmental relations, Reporting and recordkeeping, Sulfur dioxide.

Dated: November 29, 2001.

Christine Todd Whitman,

Administrator.

For the reasons stated in the preamble, part 52, chapter I, title 40 of the Code of Federal Regulations are amended as follows:

PART 52—[AMENDED]

1. The authority citation for part 52 continues to read as follows:

Authority: 42 U.S.C. 7401 *et seq.*

Subpart KK—Ohio

2. Section 52.1870 is amended by adding paragraph (c)(125) to read as follows:

§ 52.1870 Identification of plan.

* * * * *

(c)* * *

(125) On March 20, 2000, the Ohio Environmental Protection Agency submitted revised rules to control sulfur dioxide emissions in Butler and Pickaway Counties, and a revision to compliance time schedules as well as measurement methods and procedures for SO_2 sources for the State of Ohio. Ohio has rescinded OAC 3745–18–04 (G), which had special emission calculation procedures for Hamilton County.

(i) Incorporation by reference.

(A) Rules OAC 3745–18–03(A)(2)(d); OAC 3745–18–03(B)(4); OAC 3745–18–03(B)(8); OAC 3745–18–03(C)(6); OAC 3745–18–03(C)(10); 3745–18–04(D)(8); 3745–18–04(D)(9); OAC 3745–18–04(E)(7); OAC 3745–18–04(F); OAC 3745–18–15; OAC 3745–18–71. Adopted March 1, 2000, effective March 21, 2000.

(B) Rule OAC 3745–18–49(F), effective May 11, 1987.

* * * * *

3. Section 52.1881 is amended by revising paragraphs (a)(4), (a)(8), and removing and reserving paragraphs (b)(12), (b)(14), (b)(17), (b)18), and (b)(20) to read as follows:

§ 52.1881 Control strategy: Sulfur oxides (sulfur dioxide).

(a) * * *

(4) Approval—EPA approves the sulfur dioxide emission limits for the following counties: Adams County (except Dayton Power & Light-Stuart), Allen County (except Cairo Chemical), Ashland County, Ashtabula County, Athens County, Auglaize County, Belmont County, Brown County, Butler County, Carroll County, Champaign County, Clark County, Clermont County, (except Cincinnati Gas & Electric-Beckjord), Clinton County, Columbiana County, Coshocton County, Crawford County, Darke County, Defiance County, Delaware County, Erie County, Fairfield County, Fayette County, Fulton County, Gallia County, Geauga County, Greene County, Guernsey County, Hamilton County, Hancock County, Hardin County, Harrison County, Henry County, Highland County, Hocking County, Holmes County, Huron County, Jackson County, Jefferson County, Knox County, Lake County, Lawrence County (except Allied Chemical-South Point), Licking County, Logan County, Lorain County, Lucas County (except Gulf Oil Company, Coulton Chemical Company, and Phillips Chemical Company), Madison County, Marion County, Medina County, Meigs County, Mercer County, Miami County, Monroe County, Montgomery County (except Bergstrom Paper, Miami Paper), Morgan County, Morrow County, Muskingum County, Noble County, Ottawa County, Paulding County, Perry County, Pickaway County, Pike County (except Portsmouth Gaseous Diffusion Plant), Portage County, Preble County, Putnam County, Richland County, Ross County (except Mead Corporation), Sandusky County (except Martin Marietta Chemicals), Scioto County, Seneca County, Shelby County, Trumbull County, Tuscarawas County, Union County, Van Wert County, Vinton County, Warren County, Washington County (except Shell Chemical), Wayne County, Williams County, Wood County (except Libbey-Owens-Ford Plants Nos. 4 and 8 and No. 6), and Wyandot County.

* * * * *

(8) No Action—EPA is neither approving nor disapproving the emission limitations for the following counties/sources pending further review: Adams County (Dayton Power & Light-Stuart), Allen County (Cairo Chemical), Clermont County (Cincinnati Gas & Electric-Beckjord), Cuyahoga County, Franklin County, Lawrence County (Allied Chemical-South Point), Lucas County (Gulf Oil Company, Coulton Chemical Company, and Phillips Chemical Company), Mahoning County, Montgomery County (Bergstrom Paper and Miami Paper), Pike County (Portsmouth Gaseous Diffusion Plant), Ross County (Mead corporation), Sandusky County (Martin Marietta Chemicals), Stark County, Washington County (Shell Chemical Company), and Wood County (Libbey-Owens-Ford Plants Nos. 4 and 8 and No. 6).

* * * * *

[FR Doc. 02–2379 Filed 1–30–02; 8:45 am]

BILLING CODE 6560–50–P

ENVIRONMENTAL PROTECTION AGENCY

40 CFR Part 70

[DC–T5–2001a; FRL–7136–3]

Clean Air Act Full Approval of Operating Permit Program; District of Columbia; Correction

AGENCY: Environmental Protection Agency (EPA).

ACTION: Direct final rule; correcting amendment.

SUMMARY: This document corrects an error in the preamble language of a final rule pertaining to the full approval of the District of Columbia's title V operating permit program. EPA is hereby correcting a statement in the preamble to the final rule concerning its proposed interpretation of the term ''modifications'' under Title I of the Clean Air Act.

EFFECTIVE DATE: This correction is effective January 31, 2002.

FOR FURTHER INFORMATION CONTACT: Paresh R. Pandya, U.S. Environmental Protection Agency, Region III (3AP11), 1650 Arch Street, Philadelphia, PA 19103 at (215) 814–2167 or by e-mail at pandya.perry@epamail.epa.gov.

SUPPLEMENTARY INFORMATION: Effective November 30, 2001, EPA promulgated a final rule granting full approval to the District of Columbia's title V operating permit program submitted to EPA under the Clean Air Act Amendments of 1990 and implementing regulations at 40 CFR part 70. The final rule was published in the **Federal Register** on December 4, 2001 (66 FR 62954), and the proposed rule was published in the **Federal Register** on October 16, 2001 (66 FR 52561). EPA is hereby correcting a statement in the preamble to the final rule concerning EPA's most recent proposed interpretation of the term modifications under Title I of the Clean Air Act. The correction merely provides an accurate reference to EPA's most recent proposed interpretation of the term and neither the correction nor the initial statement is intended to have any effect on the Agency's final position on the December 4, 2001 rulemaking action.

In the preamble to the final rule, EPA responded to an adverse comment on the Proposed Rule which asserted that EPA could not grant the District's title V operating permit program full approval because the program excludes changes reviewed under minor new source review from the definition of Title I modifications. EPA included the following statement in the response: ''Although EPA believes that the better interpretation of 'Title I modifications'' is to include changes reviewed under a minor source preconstruction review program, EPA does not believe it is appropriate to require the District to change the definition until EPA completes its rulemaking on this provision.'' The ''interpretation of 'Title I modifications' '' referred to in this statement is the one included in EPA's proposed interim approval of the District's title V operating permit program, which was published in the **Federal Register** on March 21, 1995 (60 FR 14921, 14922). The March 21, 1995 notice in turn reflected the proposed interpretation of ''Title I modification'' contained in EPA's proposed revisions to 40 CFR part 70 that were published in the **Federal Register** on August 29, 1994 (59 FR 44460, 44463). However, EPA revised its proposed interpretation of ''Title I modifications'' in the preamble to proposed revisions to 40 CFR parts 70 and 71 that were published in the **Federal Register** on August 31, 1995 to exclude modifications under the minor new source review program in section 110(a)(2)(C) of the Clean Air Act. *See* 60 FR 45530, 45545–45546 (explaining the rationale for the revised proposed interpretation). The December 4, 2001 response to the adverse comment on

''Title I modifications'' therefore did not accurately reflect EPA's current proposed interpretation of this term. Thus, the first part of the statement quoted above should not have been included. This action corrects the erroneous language in the preamble.

Correction

In rule document No. 01–29967, beginning on page 62954, in the issue of December 4, 2001, make the following correction:

On page 62956, third column, remove the last paragraph beginning with ''*Response:*'' and on page 62957, first column, remove the first two paragraphs, and replace them with the following text:

''*Response:* EPA, in its proposed interim approval, indicated that a revision of the 20 DCMR 399.1 Definition of Title I Modification or modification under any provision of Title I of the Act to include changes reviewed under minor new source review would be required only if EPA established such a definition through rulemaking. Because EPA has not issued any final rule specifying that the definition of a 'Title I modification' must include changes subject to minor new source review, the District's current regulations remain consistent with 40 CFR part 70. EPA does not believe it is appropriate to require the District to revise the definition until such time as EPA completes its rulemaking on this provision in a manner that requires a revision in the District's rules.

Should EPA revise this definition in the future, the District will be required to revise its regulations as appropriate. As stated in EPA's proposed interim approval published on March 21, 1995 (60 FR 14921, 14922), EPA did not identify the District's definition of 'Title I modification or modification under any provision of Title I of the Act' as necessary grounds for either interim approval or disapproval. Accordingly, EPA has not identified the District's definition of this term to be a program deficiency.''

Section 553 of the Administrative Procedure Act, 5 U.S.C. 553(b)(B), provides that, when an agency for good cause finds that notice and public procedure are impracticable, unnecessary or contrary to the public interest, the agency may issue a rule without providing notice and an opportunity for public comment. We have determined that there is good cause for making today's rule final without prior proposal and opportunity for comment because we are merely correcting an incorrect citation in a previous action. Thus, notice and public procedure are unnecessary. We find that this constitutes good cause under 5 U.S.C. 553(b)(B).

Administrative Requirements

Under Executive Order (E.O.) 12866 (58 FR 51735, October 4, 1993), this action is not a ''significant regulatory action'' and is therefore not subject to review by the Office of Management and Budget. For this reason, this action is also not subject to Executive Order 13211, ''Actions Concerning Regulations That Significantly Affect Energy Supply, Distribution, or Use'' (66 FR 28355 (May 22, 2001)). Because the agency has made a ''good cause'' finding that this action is not subject to notice-and-comment requirements under the Administrative Procedures Act or any other statute as indicated in the Supplementary Information section above, it is not subject to the regulatory flexibility provisions of the Regulatory Flexibility Act (5 U.S.C. 601 *et seq.*), or to sections 202 and 205 of the Unfunded Mandates Reform Act of 1995 (UMRA) (Pub. L. 104–4). In addition, this action does not significantly or uniquely affect small governments or impose a significant intergovernmental mandate, as described in sections 203 and 204 of UMRA. This rule also does not have a substantial direct effect on one or more Indian tribes, on the relationship between the Federal Government and Indian tribes, or on the distribution of power and responsibilities between the Federal Government and Indian tribes, as specified by Executive Order 13175 (65 FR 67249, November 9, 2000), nor will it have substantial direct effects on the States, on the relationship between the national government and the States, or on the distribution of power and responsibilities among the various levels of governments, as specified by Executive Order 13132 (64 FR 43255, August 10, 1999). This rule also is not subject to Executive Order 13045 (62 FR 19885, April 23, 1997), because it is not economically significant.

This technical correction action does not involve technical standards; thus the requirements of section 12(d) of the National Technology Transfer and Advancement Act of 1995 (15 U.S.C. 272 note) do not apply. The rule also does not involve special consideration of environmental justice related issues as required by Executive Order 12898 (59 FR 7629, February 16, 1994). In issuing this rule, EPA has taken the necessary steps to eliminate drafting errors and ambiguity, minimize potential litigation, and provide a clear legal standard for affected conduct, as required by section 3 of Executive Order 12988 (61 FR 4729, February 7, 1996). EPA has complied with Executive Order 12630 (53 FR 8859, March 15, 1998) by examining the takings implications of the rule in accordance with the ''Attorney General's Supplemental Guidelines for the Evaluation of Risk and Avoidance of Unanticipated Takings'' issued under the executive order. This rule does not impose an information collection burden under the Paperwork Reduction Act of 1995 (44 U.S.C. 3501 *et seq*).

The Congressional Review Act (5 U.S.C. 801 *et seq.*), as added by the Small Business Regulatory Enforcement Fairness Act of 1996, generally provides that before a rule may take effect, the agency promulgating the rule must submit a rule report, which includes a copy of the rule, to each House of the Congress and to the Comptroller General of the United States. Section 808 allows the issuing agency to make a rule effective sooner than otherwise provided by the CRA if the agency makes a good cause finding that notice and public procedure is impracticable, unnecessary or contrary to the public interest. This determination must be supported by a brief statement. 5 U.S.C. 808(2). As stated previously, EPA had made such a good cause finding, including the reasons therefore, and established an effective date of November 30, 2001. EPA will submit a report containing this rule and other required information to the U.S. Senate, the U.S. House of Representatives, and the Comptroller General of the United States prior to publication of the rule in the **Federal Register**. This correction to Rule Document No. 01–29967 for the District of Columbia is not a ''major rule'' as defined by 5 U.S.C. 804(2).

Dated: January 24, 2002.

Thomas C. Voltaggio,

Acting Regional Administrator, EPA Region III.

[FR Doc. 02–2377 Filed 1–30–02; 8:45 am]

BILLING CODE 6560–50–P

ENVIRONMENTAL PROTECTION AGENCY

40 CFR Part 80

Regulation of Fuels and Fuel Additives

CFR Correction

In Title 40 of the Code of Federal Regulations, Parts 72 to 80, revised as of July 1, 2001, on page 705, § 80.101 is corrected by removing the second paragraph (f)(4).

[FR Doc. 02–55501 Filed 1–30–02; 8:45 am]

BILLING CODE 1505–01–D

ENVIRONMENTAL PROTECTION AGENCY

40 CFR Part 122

EPA Administered Permit Programs: The National Pollutant Discharge Elimination System

CFR Correction

In Title 40 of the Code of Federal Regulations, Parts 100 to 135, revised as of July 1, 2001, § 122.26 is corrected by revising paragraph (c)(1)(i)(E)(*4*) and removing and reserving paragraph (c)(2) to read as follows:

§ 122.26 Storm water discharges (applicable to State NPDES programs, see § 123.25).

* * * * *

(c) * * *

(1) * * *

(i) * * *

(E) * * *

(*4*) Any information on the discharge required under § 122.21(g)(7) (vi) and (vii);

* * * * *

(2) [Reserved]

* * * * *

[FR Doc. 02–55502 Filed 1–30–02; 8:45 am]

BILLING CODE 1505–01–D

FEDERAL COMMUNICATIONS COMMISSION

47 CFR Part 0

Commission Organization

CFR Correction

In Title 47 of the Code of Federal Regulations, parts 0 to 19, revised as of October 1, 2001, on page 20, the second § 0.111 is removed.

[FR Doc. 02–55504 Filed 1–30–02; 8:45 am]

BILLING CODE 1505–01–D

FEDERAL COMMUNICATIONS COMMISSION

47 CFR Parts 20 and 22

[WT Docket No. 01–14; FCC 01–328]

2000 Biennial Regulatory Review—Spectrum Aggregation Limits For Commercial Mobile Radio Services; Correction

AGENCY: Federal Communications Commission.

ACTION: Final rule; correction.

SUMMARY: The Federal Communications Commission published in the **Federal Register** of January 14, 2002, a document concerning the 2000 biennial review of the Commercial Mobile Radio Service (CMRS) spectrum aggregation limit, or ''spectrum cap,'' and cellular cross-interest rules. Inadvertently amendatory instruction no. 2 to 47 CFR 22.942 contained an error. This document corrects that instruction.

DATES: Effective February 13, 2002.

FOR FURTHER INFORMATION CONTACT: Lauren Kravetz Patrich or John Branscome, Commercial Wireless Division, Wireless Telecommunications Bureau, at (202) 418–0620.

SUPPLEMENTARY INFORMATION: The Federal Communications Commission published a document in the **Federal Register** of January 14, 2002, (67 FR 1626). This correction revises amendatory instruction no. 2 to 47 CFR 22.942. In FR Doc. 02–868, published in the **Federal Register** of January 14, 2002 (67 FR 1626) make the following correction. On page 1642, in the third column, correct amendatory instruction no. 2 to read as follows:

§ 22.942 [Corrected]

2. Section 22.942 is amended by revising the section heading and paragraphs (a) and (c) to read as follows:

* * * * *

Dated: January 24, 2002.

Federal Communications Commission.

William F. Caton,

Deputy Secretary.

[FR Doc. 02–2363 Filed 1–30–02; 8:45 am]

BILLING CODE 6712–01–P

FEDERAL COMMUNICATIONS COMMISSION

47 CFR Part 87

[WT Docket No. 00–77; FCC 01–378]

Accommodation of Advanced Digital Communications in the 117.975–137 MHz Frequency Band and Implementation of Flight Information Services in the 136–137 MHz Frequency Band

AGENCY: Federal Communications Commission.

ACTION: Final rule.

SUMMARY: This document amends the Commission's rules to specify that very high frequency (VHF) aeronautical stations operating with phase modulation digital data emissions shall limit their power and out-of-band emissions in accord with recently modified international Standards and Recommended Practices (SARPs) adopted by the International Civil Aviation Organization (ICAO). The Commission has adopted these amendments in response to a petition for partial reconsideration of the *Report and Order* in this proceeding, filed by Aeronautical Radio, Inc. (ARINC). These rule amendments will serve the public interest because the revised standards have been accepted by the aviation community globally and will assist the aviation industry in implementing new data communications systems. In addition, by facilitating the deployment of advanced aviation communications technology, these amendments will serve the goals of aviation safety and efficiency that underlie this proceeding.

EFFECTIVE DATE: Effective March 4, 2002.

FOR FURTHER INFORMATION CONTACT: Jeffrey Tobias, Wireless Telecommunications Bureau at (202) 418–0680.

SUPPLEMENTARY INFORMATION: 1. This is a summary of the Commission's *Memorandum Opinion and Order,* FCC 01–378, adopted on December 21, 2001, and released on December 28, 2001. The full text of this *Memorandum Opinion and Order* is available for inspection and copying during normal business hours in the FCC Reference Center, Room CY–A257, 445 12th Street, SW., Washington, D.C. 20554. The complete text may be purchased from the Commission's copy contractor, Qualex International, Portals II, 445 12th Street, S.W., Room CY–B402, Washington, D.C. 20554.

Summary of Report and Order

2. Based on the record in this proceeding, we conclude that we should grant ARINC's petition for partial reconsideration because § 87.139(k) of the Commission's rules, 47 CFR 87.139(k), as adopted in the *Report and Order,* does not reflect recent changes in international standards pertaining to the emission mask and out-of-band power levels for VHF digital aviation communications systems. These modifications of the international SARPs, adopted by the ICAO after the period for submitting comments to the *Notice of Proposed Rulemaking* in this proceeding, 65 FR 41032, July 3, 2000, are to take effect on January 1, 2002. The ICAO has increased the amount of power permissible in the first adjacent channel by 2 dB, specifying that the total amount of power across the first adjacent channel shall not exceed 2 dBm, rather than the 0 dBm now specified in § 87.139(k)(1). The ICAO has also specified that the power measured over a 16 kHz bandwidth centered in either first adjacent 25 kHz channel shall be limited to −18 dBm,

instead of the −20 dBm limit set forth in § 87.139(k)(3). Finally, the ICAO has increased the amount of suppression required for out-of-band emissions in the second adjacent channels and beyond. The old standard required that the amount of power measured across either second adjacent channel be less than −25 dBm, and that the power measured in any other adjacent 25 kHz channels decrease monotonically by at least 5 dB per octave to a maximum value of −52 dBm. Under the new standard, the amount of power measured across either second adjacent 25 kHz channel must be less than −28 dBm, the amount of power measured across either fourth adjacent 25 kHz channel must be less than −38 dBm, and from thereon the power measured in any other adjacent 25 kHz channel must monotonically decrease at a rate of at least 5 dB per octave to a maximum value of −53 dBm.

3. It would serve the public interest to have these revised standards reflected in § 87.139(k) because they have been accepted by the aviation community globally and will assist the aviation industry in implementing new data communications systems. In addition, by facilitating the deployment of advanced aviation communications technology, this amendment will also serve the goals of effective aviation safety and efficiency that underlie this proceeding. Consistent with the ICAO rules scheduled to take effect on January 1, 2002, stations installed before January 1, 2002 that meet the existing out-of-band emission suppression standard in § 87.139(k)(2) but not the revised standard will be permitted to continue operating indefinitely.

Final Regulatory Flexibility Certification

4. The Regulatory Flexibility Act of 1980, as amended, (RFA) requires that a regulatory flexibility analysis be prepared for rulemaking proceedings, unless the agency certifies that ''the rule will not have a significant economic impact on a substantial number of small entities.'' The RFA generally defines ''small entity'' as having the same meaning as the terms ''small business,'' ''small organization,'' and ''small governmental jurisdiction.'' In addition, the term ''small business'' has the same meaning as the term ''small business concern'' under the Small Business Act. A small business concern is one which: (1) Is independently owned and operated; (2) is not dominant in its field of operation; and (3) satisfies any additional criteria established by the Small Business Administration (SBA).

5. In this *Memorandum Opinion and Order,* we make minor revisions to the out-of-band emission limits applicable to VHF aeronautical stations and aircraft stations operating with digital communications technology. These minor revisions conform our rules with international standards applicable to equipment and aircraft operating outside United States airspace, and have been adopted at the request of Aeronautical Radio, Inc., an organization representing the civil aviation industry, without objection from any party. These minor revisions do not impose any new reporting or compliance requirements on any entity, do not otherwise impose any additional burdens on any small entities, and do not require alteration of the Final Regulatory Flexibility Analysis for the *Report and Order.* We therefore certify that the adoption of this *Memorandum Opinion and Order* will not have a significant economic impact on a substantial number of small entities.

Report to Congress: The Commission will send a copy of this *Memorandum Opinion and Order,* including a copy of this Final Regulatory Flexibility Certification, in a report to be sent to Congress pursuant to the Small Business Regulatory Enforcement Fairness Act of 1996, see 5 U.S.C. 801(a)(1)(A). In addition, the Commission will send a copy of this *Memorandum Opinion and Order,* including a copy of this Final Regulatory Flexibility Certification, to the Chief Counsel for Advocacy of the Small Business Administration. A copy of the *Report and Order* and Final Regulatory Flexibility Certification (or summaries thereof) will also be published in the **Federal Register**. *See* 5 U.S.C. 604(b).

Ordering Clauses

6. Authority for issuance of this *Memorandum Opinion and Order* is contained in sections 1, 4(i), 302, 303(f) and (r), and 332 of the Communications Act of 1934, as amended, 47 U.S.C. 151, 154(i), 302, 303(f) and (r), 332.

7. The Petition for Partial Reconsideration filed by Aeronautical Radio, Inc. on June 14, 2001 is granted.

8. Pursuant to sections 1, 4(i), 302, 303(f) and (r), and 332 of the Communications Act of 1934, as amended, 47 U.S.C. 151, 154(i), 302, 303(f) and (r), 332, part 87 of the Commission's rules, 47 CFR part 87, is amended as set forth in Rule Changes, effective March 4, 2002.

17. The Commission's Consumer Information Bureau, Reference Information Center, shall send a copy of this *Memorandum Opinion and Order,* including the Final Regulatory Flexibility Certification, to the Chief Counsel for Advocacy of the Small Business Administration.

List of Subjects in 47 CFR Part 87

Air transportation; Radio.

Federal Communications Commission.

William F. Caton,

Deputy Secretary.

Rule Changes

For reasons discussed in the preamble, the Federal Communication Commission amends 47 CFR part 87 as follows:

PART 87—AVIATION SERVICES

1. The authority citation for part 87 continues to read as follows:

Authority: 47 U.S.C. 154, 303, and 307(e), unless otherwise noted.

2. Section 87.139 is amended by revising paragraph (k) to read as follows:

§ 87.139 Emission limitations.

* * * * *

(k) For VHF aeronautical stations and aircraft stations operating with G1D or G7D emissions:

(1) The amount of power measured across either first adjacent 25 kHz channel shall not exceed 2 dBm.

(2) For stations first installed before January 1, 2002, the amount of power measured across either second adjacent channel shall be less than −25 dBm and the power measured in any other adjacent 25 kHz channels shall monotonically decrease at a rate of at least 5 dB per octave to a maximum value of −52 dBm. For stations first installed on or after January 1, 2002,

(i) The amount of power measured across either second adjacent 25 kHz channel shall be less than −28 dBm;

(ii) The amount of power measured across either fourth adjacent 25 kHz channel shall be less than −38 dBm; and

(iii) From thereon the power measured in any other adjacent 25 kHz channel shall monotonically decrease at a rate of at least 5 dB per octave to a maximum value of −53 dBm.

(3) The amount of power measured over a 16 kHz channel bandwidth centered on the first adjacent 25 kHz channel shall not exceed −18 dBm.

[FR Doc. 02–2284 Filed 1–30–02; 8:45 am]

BILLING CODE 6712–01–P

DEPARTMENT OF TRANSPORTATION

Office of the Secretary

49 CFR Part 40

Procedures for Transportation Workplace Drug and Alcohol Testing Programs

CFR Correction

In Title 49 of the Code of Federal Regulations, Parts 1 to 99, revised as of October 1, 2001, on page 593, § 40.45 is corrected by revising paragraph (a) to read as follows:

§ 40.45 What form is used to document a DOT urine collection?

(a) The Federal Drug Testing Custody and Control Form (CCF) must be used to document every urine collection required by the DOT drug testing program. The CCF must be a five-part carbonless manifold form. You may view this form on the Department's web site (http://www.dot.gov/ost/dapc) or the HHS web site (http://www.workplace.samhsa.gov).

* * * * *

[FR Doc. 02–55503 Filed 1–30–02; 8:45 am]

BILLING CODE 1505–01–D

DEPARTMENT OF COMMERCE

National Oceanic and Atmospheric Administration

50 CFR Part 622

[Docket No. 001005281–0369–02; I.D. 012502C]

Fisheries of the Caribbean, Gulf of Mexico, and South Atlantic; Coastal Migratory Pelagic Resources of the Gulf of Mexico and South Atlantic; Closure

AGENCY: National Marine Fisheries Service (NMFS), National Oceanic and Atmospheric Administration (NOAA), Commerce.

ACTION: Closure.

SUMMARY: NMFS closes the commercial run-around gillnet fishery for king mackerel in the exclusive economic zone (EEZ) in the southern Florida west coast subzone. This closure is necessary to protect the Gulf king mackerel resource.

DATES: The closure is effective 6 a.m., local time, January 28, 2002, through 6:00 a.m., January 21, 2003.

FOR FURTHER INFORMATION CONTACT: Mark Godcharles, telephone: 727–570–5305, fax: 727–570–5583, e-mail: Mark.Godcharles@noaa.gov.

SUPPLEMENTARY INFORMATION: The fishery for coastal migratory pelagic fish (king mackerel, Spanish mackerel, cero, cobia, little tunny, dolphin, and, in the Gulf of Mexico only, bluefish) is managed under the Fishery Management Plan for the Coastal Migratory Pelagic Resources of the Gulf of Mexico and South Atlantic (FMP). The FMP was prepared by the Gulf of Mexico and South Atlantic Fishery Management Councils (Councils) and is implemented under the authority of the Magnuson-Stevens Fishery Conservation and Management Act (Magnuson-Stevens Act) by regulations at 50 CFR part 622.

Based on the Councils' recommended total allowable catch and the allocation ratios in the FMP, on April 30, 2001 (66 FR 17368, March 30, 2001) NMFS implemented a commercial quota of 2.25 million lb (1.02 million kg) for the eastern zone (Florida) of the Gulf migratory group of king mackerel. That quota is further divided into separate quotas for the Florida east coast subzone and the northern and southern Florida west coast subzones. On April 27, 2000, NMFS implemented the final rule (65 FR 16336, March 28, 2000) that divided the Florida west coast subzone of the eastern zone into northern and southern subzones, and established their separate quotas. The quota newly implemented for the southern Florida west coast subzone is 1,040,625 lb (472,020 kg). That quota is further divided into two equal quotas of 520,312 lb (236,010 kg) for vessels in each of two groups fishing with run-around gillnets and hook-and-line gear (50 CFR 622.42(c)(1)(i)(A)(*2*)(*i*)).

Under 50 CFR 622.43(a)(3), NMFS is required to close any segment of the king mackerel commercial fishery when its quota has been reached, or is projected to be reached, by filing a notification at the Office of the **Federal Register**. NMFS has determined that the commercial quota of 520,312 lb (236,010 kg) for Gulf group king mackerel for vessels using run-around gillnet gear in the southern Florida west coast subzone will be reached on January 27, 2002. Accordingly, the commercial fishery for king mackerel for such vessels in the southern Florida west coast subzone is closed at 6 a.m., local time, January 28, 2002, through 6:00 a.m., January 21, 2003, the beginning of the next fishing season, i.e., the day after the 2003 Martin Luther King Jr. Federal holiday.

The Florida west coast subzone is that part of the eastern zone south and west of 25°20.4′ N. lat. (a line directly east from the Miami-Dade County, FL, boundary). The Florida west coast subzone is further divided into northern and southern subzones. The southern subzone is that part of the Florida west coast subzone which from November 1 through March 31 extends south and west from 25°20.4′ N. lat. to 26°19.8′ N. lat.(a line directly west from the Lee/Collier County, FL, boundary), i.e., the area off Collier and Monroe Counties. From April 1 through October 31, the southern subzone is that part of the Florida west coast subzone which is between 26°19.8′ N. lat. and 25°48′ N. lat.(a line directly west from the Monroe/Collier County, FL, boundary), i.e., the area off Collier County.

Classification

This action responds to the best available information recently obtained from the fishery. The closure must be implemented immediately to prevent an overrun of the commercial quota (50 CFR 622.42(c)(1)) of Gulf group king mackerel, given the capacity of the fishing fleet to harvest the quota quickly. Overruns could potentially lead to further overfishing and unnecessary delays in rebuilding this resource. Therefore, any delay in implementing this action would be impractical and contradictory to the Magnuson-Stevens Act, the FMP, and the public interest. NMFS finds, for good cause, that the implementation of this action cannot be delayed for 30 days. Accordingly, under 5 U.S.C. 553(d), a delay in the effective date is waived.

This action is taken under 50 CFR 622.43(a) and is exempt from review under E.O. 12866.

Authority: 16 U.S.C. 1801 *et seq.*

Dated: January 25, 2002.

Jonathan M. Kurland,

Acting Director,Office of Sustainable Fisheries, National Marine Fisheries Service.

[FR Doc. 02–2295 Filed 1–25–02; 4:57 pm]

BILLING CODE 3510–22–S

DEPARTMENT OF COMMERCE

National Oceanic and Atmospheric Administration

50 CFR Part 679

[Docket No. 011218304-1304-01; I.D. 012402B]

Fisheries of the Exclusive Economic Zone Off Alaska; Pollock in Statistical Area 630 of the Gulf of Alaska

AGENCY: National Marine Fisheries Service (NMFS), National Oceanic and Atmospheric Administration (NOAA), Commerce.

ACTION: Modification of a closure.

SUMMARY: NMFS is opening directed fishing for pollock in Statistical Area 630 of the Gulf of Alaska (GOA) for 24 hours. This action is necessary to fully use the first seasonal apportionment of the total allowable catch (TAC) of pollock specified for this area.

DATES: Effective 1200 hrs, Alaska local time (A.l.t.), January 29, 2002, until 1200 hrs, A.l.t., January 30, 2002.

FOR FURTHER INFORMATION CONTACT: Mary Furuness, 907–586–7228.

SUPPLEMENTARY INFORMATION: NMFS manages the groundfish fishery in the GOA exclusive economic zone according to the Fishery Management Plan for Groundfish of the Gulf of Alaska (FMP) prepared by the North Pacific Fishery Management Council under authority of the Magnuson-Stevens Fishery Conservation and Management Act. Regulations governing fishing by U.S. vessels in accordance with the FMP appear at subpart H of 50 CFR part 600 and 50 CFR part 679.

The ''A'' season allowance of the 2002 pollock TAC in Statistical Area 630 of the GOA was established as 1,122 metric tons by an emergency rule implementing 2002 harvest specifications and associated management measures for the groundfish fisheries off Alaska (67 FR 956, January 8, 2002).

NMFS closed the directed fishery for pollock in Statistical Area 630 of the GOA under § 679.20(d)(1)(iii) on January 21, 2002 (67 FR 3126, January 23, 2002).

NMFS has determined that approximately 522 mt currently remain in the directed fishing allowance. Therefore, NMFS is terminating the previous closure and is opening directed fishing for pollock in Statistical Area 630 of the GOA. In accordance with § 679.20(d)(1)(iii), the Regional Administrator finds that this directed fishing allowance will be reached after 24 hours. Consequently, NMFS is prohibiting directed fishing for pollock in Statistical Area 630 of the GOA effective 1200 hrs, A.l.t., January 30, 2002.

Classification

This action responds to the best available information recently obtained from the fishery. The Assistant Administrator for Fisheries, NOAA, finds that the need to immediately implement this action to allow full use the amount of the 2002 A season pollock TAC specified for Statistical Area 630 of the GOA constitutes good cause to waive the requirement to provide prior notice and opportunity for public comment pursuant to the authority set forth at 5 U.S.C. 553(b)(3)(B) and 50 CFR 679.20(b)(3)(iii)(A), as such procedures would be unnecessary and contrary to the public interest. Similarly, the need to implement these measures in a timely fashion to allow full use the amount of the 2002 A season pollock TAC specified for Statistical Area 630 of the GOA constitutes good cause to find that the effective date of this action cannot be delayed for 30 days. Accordingly, under 5 U.S.C. 553(d), a delay in the effective date is hereby waived.

This action is required by § 679.20 and is exempt from review under Executive Order 12866.

Authority: 16 U.S.C. 1801 *et seq.*

Dated: January 25, 2002.

Jonathan M. Kurland,

Acting Director, Office of Sustainable Fisheries, National Marine Fisheries Service.

[FR Doc. 02–2402 Filed 1–29–02; 9:18 am]

BILLING CODE 3510–22–S

Rules and Regulations

Federal Register
Vol. 67, No. 21
Thursday, January 31, 2002

This section of the FEDERAL REGISTER contains regulatory documents having general applicability and legal effect, most of which are keyed to and codified in the Code of Federal Regulations, which is published under 50 titles pursuant to 44 U.S.C. 1510.

The Code of Federal Regulations is sold by the Superintendent of Documents. Prices of new books are listed in the first FEDERAL REGISTER issue of each week.

DEPARTMENT OF TRANSPORTATION

Federal Aviation Administration

14 CFR Part 39

[Docket No. 2001–NM–229–AD; Amendment 39–12616; AD 2002–01–22]

RIN 2120–AA64

Airworthiness Directives; Short Brothers Model SD3 Series Airplanes

AGENCY: Federal Aviation Administration, DOT.

ACTION: Final rule.

SUMMARY: This amendment adopts a new airworthiness directive (AD), applicable to all Short Brothers Model SD3 series airplanes, that requires a one-time inspection of the installation of the bearing housings of the elevator torque shaft assembly, and corrective action if necessary. This action is necessary to prevent failure of the elevator torque shaft, which could result in reduced controllability of the airplane. This action is intended to address the identified unsafe condition.

DATES: Effective March 7, 2002.

The incorporation by reference of certain publications listed in the regulations is approved by the Director of the Federal Register as of March 7, 2002.

ADDRESSES: The service information referenced in this AD may be obtained from Short Brothers, Airworthiness & Engineering Quality, P.O. Box 241, Airport Road, Belfast BT3 9DZ, Northern Ireland. This information may be examined at the Federal Aviation Administration (FAA), Transport Airplane Directorate, Rules Docket, 1601 Lind Avenue, SW., Renton, Washington; or at the Office of the Federal Register, 800 North Capitol Street, NW., suite 700, Washington, DC.

FOR FURTHER INFORMATION CONTACT: Todd Thompson, Aerospace Engineer, International Branch, ANM–116, FAA, Transport Airplane Directorate, 1601 Lind Avenue, SW., Renton, Washington 98055–4056; telephone (425) 227–1175; fax (425) 227–1149.

SUPPLEMENTARY INFORMATION: A proposal to amend part 39 of the Federal Aviation Regulations (14 CFR part 39) to include an airworthiness directive (AD) that is applicable to all Short Brothers Model SD3 series airplanes was published in the **Federal Register** on October 4, 2001 (66 FR 50584). That action proposed to require a one-time inspection of the installation of the bearing housings of the elevator torque shaft assembly, and corrective action if necessary.

Comments

Interested persons have been afforded an opportunity to participate in the making of this amendment. No comments were submitted in response to the proposal or the FAA's determination of the cost to the public.

Conclusion

The FAA has determined that air safety and the public interest require the adoption of the rule as proposed.

Cost Impact

The FAA estimates that 75 Model SD3 series airplanes of U.S. registry will be affected by this AD, that it will take approximately 2 work hours per airplane to accomplish the required inspection, and that the average labor rate is $60 per work hour. Based on these figures, the cost impact of the inspection required by this AD on U.S. operators is estimated to be $9,000, or $120 per airplane.

The cost impact figure discussed above is based on assumptions that no operator has yet accomplished any of the requirements of this AD action, and that no operator would accomplish those actions in the future if this AD were not adopted. The cost impact figures discussed in AD rulemaking actions represent only the time necessary to perform the specific actions actually required by the AD. These figures typically do not include incidental costs, such as the time required to gain access and close up, planning time, or time necessitated by other administrative actions.

Regulatory Impact

The regulations adopted herein will not have a substantial direct effect on the States, on the relationship between the national Government and the States, or on the distribution of power and responsibilities among the various levels of government. Therefore, it is determined that this final rule does not have federalism implications under Executive Order 13132.

For the reasons discussed above, I certify that this action (1) is not a ''significant regulatory action'' under Executive Order 12866; (2) is not a ''significant rule'' under DOT Regulatory Policies and Procedures (44 FR 11034, February 26, 1979); and (3) will not have a significant economic impact, positive or negative, on a substantial number of small entities under the criteria of the Regulatory Flexibility Act. A final evaluation has been prepared for this action and it is contained in the Rules Docket. A copy of it may be obtained from the Rules Docket at the location provided under the caption **ADDRESSES.**

List of Subjects in 14 CFR Part 39

Air transportation, Aircraft, Aviation safety, Incorporation by reference, Safety.

Adoption of the Amendment

Accordingly, pursuant to the authority delegated to me by the Administrator, the Federal Aviation Administration amends part 39 of the Federal Aviation Regulations (14 CFR part 39) as follows:

PART 39—AIRWORTHINESS DIRECTIVES

1. The authority citation for part 39 continues to read as follows:

Authority: 49 U.S.C. 106(g), 40113, 44701.

§ 39.13 [Amended]

2. Section 39.13 is amended by adding the following new airworthiness directive:

2002–01–22 Short Brothers PLC: Amendment 39–12616. Docket 2001–NM–229–AD.

Applicability: All Model SD3 series airplanes, certificated in any category.

Note 1: This AD applies to each airplane identified in the preceding applicability provision, regardless of whether it has been modified, altered, or repaired in the area

subject to the requirements of this AD. For airplanes that have been modified, altered, or repaired so that the performance of the requirements of this AD is affected, the owner/operator must request approval for an alternative method of compliance in accordance with paragraph (c) of this AD. The request should include an assessment of the effect of the modification, alteration, or repair on the unsafe condition addressed by this AD; and, if the unsafe condition has not been eliminated, the request should include specific proposed actions to address it.

Compliance: Required as indicated, unless accomplished previously.

To prevent failure of the elevator torque shaft, which could result in reduced controllability of the airplane, accomplish the following:

Inspection

(a) Within 60 days after the effective date of this AD: Perform a detailed visual inspection of the bearing housings of the elevator torque shaft assembly to detect discrepancies (including movement of the housings relative to the mounting structure), in accordance with the applicable service bulletin listed in the following table:

TABLE 1.—SERVICE BULLETINS

For model—	Inspect in accordance with Short Brothers Service Bulletin—	Dated—
(1) SD3–60 Sherpa series airplanes	SD3–60 SHERPA–27–6	May 22, 2001
(2) SD3–Sherpa series airplanes	SD3 SHERPA–27–5	May 22, 2001
(3) SD3–60 series airplanes	SD360–27–31	May 22, 2001
(4) SD3–30 series airplanes	SD330–27–39	May 22, 2001

Note 2: For the purposes of this AD, a detailed visual inspection is defined as: ''An intensive visual examination of a specific structural area, system, installation, or assembly to detect damage, failure, or irregularity. Available lighting is normally supplemented with a direct source of good lighting at intensity deemed appropriate by the inspector. Inspection aids such as mirror, magnifying lenses, etc., may be used. Surface cleaning and elaborate access procedures may be required.''

Corrective Action

(b) If any discrepancy is found during the inspection required by paragraph (a) of this AD: Prior to further flight, replace any affected part with a new part, in accordance with the applicable service bulletin listed in Table 1 of this AD.

Note 3: The service bulletins listed in Table 1 of this AD recommend that operators submit a report of their inspection findings to the manufacturer. Although operators may submit such a report, this AD does not require it.

Alternative Methods of Compliance

(c) An alternative method of compliance or adjustment of the compliance time that provides an acceptable level of safety may be used if approved by the Manager, International Branch, ANM–116, Transport Airplane Directorate, FAA. Operators shall submit their requests through an appropriate FAA Principal Maintenance Inspector, who may add comments and then send it to the Manager, International Branch, ANM–116.

Note 4: Information concerning the existence of approved alternative methods of compliance with this AD, if any, may be obtained from the International Branch, ANM–116.

Special Flight Permits

(d) Special flight permits may be issued in accordance with sections 21.197 and 21.199 of the Federal Aviation Regulations (14 CFR 21.197 and 21.199) to operate the airplane to a location where the requirements of this AD can be accomplished.

Incorporation by Reference

(e) The actions shall be done in accordance with Short Brothers Service Bulletin SD3–60 SHERPA–27–6, dated May 22, 2001; Short Brothers Service Bulletin SD3–SHERPA–27–5, dated May 22, 2001; Short Brothers Service Bulletin SD360–27–31, dated May 22, 2001; or Short Brothers Service Bulletin SD330–27–39, dated May 22, 2001; as applicable. This incorporation by reference was approved by the Director of the Federal Register in accordance with 5 U.S.C. 552(a) and 1 CFR part 51. Copies may be obtained from Short Brothers, Airworthiness & Engineering Quality, P.O. Box 241, Airport Road, Belfast BT3 9DZ, Northern Ireland. Copies may be inspected at the FAA, Transport Airplane Directorate, 1601 Lind Avenue, SW., Renton, Washington; or at the Office of the Federal Register, 800 North Capitol Street, NW., suite 700, Washington, DC.

Note 5: The subject of this AD is addressed in British airworthiness directives 003–05–2001, 008–05–2001, 009–05–2001, and 007–05–2001.

Effective Date

(f) This amendment becomes effective on March 7, 2002.

Issued in Renton, Washington, on January 17, 2002.

Michael Kaszycki,

Acting Manager, Transport Airplane Directorate, Aircraft Certification Service.

[FR Doc. 02–1820 Filed 1–30–02; 8:45 am]

BILLING CODE 4910–13–P

DEPARTMENT OF TRANSPORTATION

Federal Aviation Administration

14 CFR Part 39

[Docket No. 2001–NM–200–AD; Amendment 39–12621; AD 2002–01–26]

RIN 2120–AA64

Airworthiness Directives; Israel Aircraft Industries, Ltd., Model 1124 and 1124A, and Model 1125 Westwind Astra Series Airplanes

AGENCY: Federal Aviation Administration, DOT.

ACTION: Final rule.

SUMMARY: This amendment adopts a new airworthiness directive (AD), applicable to all Israel Aircraft Industries, Ltd., Model 1124 and 1124A, and certain Model 1125 Westwind Astra series airplanes, that requires a one-time inspection of the attachment bolts installed on the engine inlet cowl and aft nacelle attachment flanges to verify correct part numbers of the bolts, and replacement of any discrepant/incorrect bolt with a correct attachment bolt. The actions specified by this AD are intended to prevent failure of attachment bolts due to fatigue, which could result in separation of the engine inlet cowl and aft nacelle, and consequent damage to the horizontal or vertical stabilizer. This action is intended to address the identified unsafe condition.

DATES: Effective March 7, 2002.

The incorporation by reference of certain publications listed in the regulations is approved by the Director of the Federal Register as of March 7, 2002.

ADDRESSES: The service information referenced in this AD may be obtained

from Galaxy Aerospace Corporation, One Galaxy Way, Fort Worth Alliance Airport, Fort Worth, Texas 76177. This information may be examined at the Federal Aviation Administration (FAA), Transport Airplane Directorate, Rules Docket, 1601 Lind Avenue, SW., Renton, Washington; or at the Office of the Federal Register, 800 North Capitol Street, NW., suite 700, Washington, DC.

FOR FURTHER INFORMATION CONTACT: Dan Rodina, Aerospace Engineer, International Branch, ANM–116, FAA, Transport Airplane Directorate, 1601 Lind Avenue, SW., Renton, Washington 98055–4056; telephone (425) 227–2125; fax (425) 227–1149.

SUPPLEMENTARY INFORMATION: A proposal to amend part 39 of the Federal Aviation Regulations (14 CFR part 39) to include an airworthiness directive (AD) that is applicable to all Israel Aircraft Industries, Ltd., Model 1124 and 1124A, and certain Model 1125 Westwind Astra series airplanes was published in the **Federal Register** on October 29, 2001 (66 FR 54465). That action proposed to require a one-time inspection of the attachment bolts installed on the engine inlet cowl and aft nacelle attachment flanges to verify correct part numbers of the bolts, and replacement of any discrepant/incorrect bolt with a correct attachment bolt.

Comments

Interested persons have been afforded an opportunity to participate in the making of this amendment. No comments were submitted in response to the proposal or the FAA's determination of the cost to the public.

Conclusion

The FAA has determined that air safety and the public interest require the adoption of the rule as proposed.

Cost Impact

The FAA estimates that 299 airplanes of U.S. registry will be affected by this AD, that it will take approximately 1 work hour per airplane to accomplish the inspection, and that the average labor rate is $60 per work hour. Based on these figures, the cost impact of the AD on U.S. operators is estimated to be $17,940, or $60 per airplane.

The cost impact figure discussed above is based on assumptions that no operator has yet accomplished any of the requirements of this AD action, and that no operator would accomplish those actions in the future if this AD were not adopted. The cost impact figures discussed in AD rulemaking actions represent only the time necessary to perform the specific actions actually required by the AD. These figures typically do not include incidental costs, such as the time required to gain access and close up, planning time, or time necessitated by other administrative actions.

Regulatory Impact

The regulations adopted herein will not have a substantial direct effect on the States, on the relationship between the national Government and the States, or on the distribution of power and responsibilities among the various levels of government. Therefore, it is determined that this final rule does not have federalism implications under Executive Order 13132.

For the reasons discussed above, I certify that this action (1) is not a ''significant regulatory action'' under Executive Order 12866; (2) is not a ''significant rule'' under DOT Regulatory Policies and Procedures (44 FR 11034, February 26, 1979); and (3) will not have a significant economic impact, positive or negative, on a substantial number of small entities under the criteria of the Regulatory Flexibility Act. A final evaluation has been prepared for this action and it is contained in the Rules Docket. A copy of it may be obtained from the Rules Docket at the location provided under the caption **ADDRESSES.**

List of Subjects in 14 CFR Part 39

Air transportation, Aircraft, Aviation safety, Incorporation by reference, Safety.

Adoption of the Amendment

Accordingly, pursuant to the authority delegated to me by the Administrator, the Federal Aviation Administration amends part 39 of the Federal Aviation Regulations (14 CFR part 39) as follows:

PART 39—AIRWORTHINESS DIRECTIVES

1. The authority citation for part 39 continues to read as follows:

Authority: 49 U.S.C. 106(g), 40113, 44701.

§ 39.13 [Amended]

2. Section 39.13 is amended by adding the following new airworthiness directive:

2002–01–26 Israel Aircraft Industries, Ltd.: Amendment 39–12621. Docket 2001–NM–200–AD.

Applicability: All Model 1124 and 1124A series airplanes, and Model 1125 Westwind Astra series airplanes having serial numbers 004 through 072 inclusive and 074 through 078 inclusive; certificated in any category.

Note 1: This AD applies to each airplane identified in the preceding applicability provision, regardless of whether it has been modified, altered, or repaired in the area subject to the requirements of this AD. For airplanes that have been modified, altered, or repaired so that the performance of the requirements of this AD is affected, the owner/operator must request approval for an alternative method of compliance in accordance with paragraph (b) of this AD. The request should include an assessment of the effect of the modification, alteration, or repair on the unsafe condition addressed by this AD; and, if the unsafe condition has not been eliminated, the request should include specific proposed actions to address it.

Compliance: Required as indicated, unless accomplished previously.

To prevent failure of attachment bolts due to fatigue, which could result in separation of the engine inlet cowl and aft nacelle, and consequent damage to the horizontal or vertical stabilizer, accomplish the following:

Inspection and Replacement, if Necessary

(a) Within 50 flight hours from the effective date of this AD, perform a one-time inspection of the bolts installed on the engine inlet cowl and aft nacelle attachment flanges to verify correct part numbers of the bolts. Before further flight, replace any discrepant bolts with the correct bolts, per 1124–Westwind (Israeli Aircraft Industries) Alert Service Bulletin 1124–54A–138, and Astra (Israeli Aircraft Industries) Alert Service Bulletin 1125–54A–247, both dated March 29, 2001; as applicable.

Alternative Methods of Compliance

(b) An alternative method of compliance or adjustment of the compliance time that provides an acceptable level of safety may be used if approved by the Manager, International Branch, ANM–116, Transport Airplane Directorate, FAA. Operators shall submit their requests through an appropriate FAA Principal Maintenance Inspector, who may add comments and then send it to the Manager, International Branch, ANM–116.

Note 2: Information concerning the existence of approved alternative methods of compliance with this AD, if any, may be obtained from the International Branch, ANM–116.

Special Flight Permits

(c) Special flight permits may be issued in accordance with §§ 21.197 and 21.199 of the Federal Aviation Regulations (14 CFR 21.197 and 21.199) to operate the airplane to a location where the requirements of this AD can be accomplished.

Incorporation by Reference

(d) The actions shall be done in accordance with 1124-Westwind (Israeli Aircraft Industries) Alert Service Bulletin 1124–54A–138, dated March 29, 2001; and Astra (Israeli Aircraft Industries) Alert Service Bulletin 1125–54A–247, dated March 29, 2001; as applicable. This incorporation by reference was approved by the Director of the Federal Register in accordance with 5 U.S.C. 552(a) and 1 CFR part 51. Copies may be obtained from Galaxy Aerospace Corporation, One Galaxy Way, Fort Worth Alliance Airport, Fort Worth, Texas 76177. Copies may be

inspected at the FAA, Transport Airplane Directorate, 1601 Lind Avenue, SW., Renton, Washington; or at the Office of the Federal Register, 800 North Capitol Street, NW., suite 700, Washington, DC.

Note 3: The subject of this AD is addressed in Israeli airworthiness directive 54–01–05–02, dated May 13, 2001.

Effective Date

(e) This amendment becomes effective on March 7, 2002.

Issued in Renton, Washington, on January 18, 2002.

Michael Kaszycki,

Acting Manager, Transport Airplane Directorate, Aircraft Certification Service.

[FR Doc. 02–1964 Filed 1–30–02; 8:45 am]

BILLING CODE 4910–13–P

DEPARTMENT OF TRANSPORTATION

Federal Aviation Administration

14 CFR Part 39

[Docket No. 2001–NE–02–AD; Amendment 39–12624; AD 2002–01–29]

RIN 2120–AA64

Airworthiness Directives; Rolls-Royce, plc. Models Tay 650–15 and 651–54 Turbofan Engines

AGENCY: Federal Aviation Administration, DOT.

ACTION: Final rule; request for comments.

SUMMARY: This amendment adopts a new airworthiness directive (AD) that is applicable to Rolls-Royce, plc (RR) models Tay 650–15 and 651–54 turbofan engines. This action requires borescope inspection of the high pressure compressor (HPC) stage 12 disc assembly to detect damage caused by HPC outlet guide vane (OGV) retaining bolt failure, and replacement of unserviceable parts with serviceable parts. This action also requires as terminating action, the incorporation of a new design retention arrangement for the HPC OGV, to prevent HPC OGV retaining bolt failure. This amendment is prompted by service reports of cracked HPC stage 11/12 disc spacers. The actions specified in this AD are intended to prevent an uncontained failure of the HPC stage 11/12 disc spacer, which could result in damage to the airplane.

DATES: Effective February 15, 2002. The incorporation by reference of certain publications listed in the rule is approved by the Director of the Federal Register as of February 15, 2002.

Comments for inclusion in the Rules Docket must be received on or before April 1, 2002.

ADDRESSES: Submit comments in triplicate to the Federal Aviation Administration (FAA), New England Region, Office of the Regional Counsel, Attention: Rules Docket No. 2001–NE–02–AD, 12 New England Executive Park, Burlington, MA 01803–5299. Comments may be inspected at this location, by appointment, between 8 a.m. and 4:30 p.m., Monday through Friday, except Federal holidays. Comments may also be sent via the Internet using the following address: *''9-ane-adcomment@faa.gov''*. Comments sent via the Internet must contain the docket number in the subject line.

The service information referenced in this AD may be obtained from Rolls-Royce plc, PO Box 31 Derby, DE24 8BJ, United Kingdom; telephone 011–44–1332–242424; fax 011–44–1332–249936. This information may be examined at the FAA, by appointment, between 8 a.m. and 4:30 p.m., Monday through Friday, except Federal holidays, at the FAA, New England Region, Office of the Regional Counsel, 12 New England Executive Park, Burlington, MA; or at the Office of the Federal Register, 800 North Capitol Street, NW., suite 700, Washington, DC.

FOR FURTHER INFORMATION CONTACT: Keith Mead, Aerospace Engineer, Engine Certification Office, FAA, Engine and Propeller Directorate, 12 New England Executive Park, Burlington, MA 01803–5299; telephone (781) 238–7744; fax (781) 238–7199.

SUPPLEMENTARY INFORMATION: The Civil Aviation Authority (CAA), which is the airworthiness authority for the United Kingdom (UK), recently notified the FAA that an unsafe condition may exist on RR models Tay 650–15 and 651–54 turbofan engines. The CAA advises that four cracked HPC stage 11/12 spacers have been found during engine overhaul. Investigation has concluded that the spacer cracking results from prior failures of the HPC OGV retaining bolts. The separated OGV bolt material is released into a cavity between the inner seal support assembly air seal and stage 12 rotor disc assembly, damaging the disc assembly, resulting in high stresses and cracking of the HPC stage 11/12 spacer. Loose object damage resulting from OGV retaining bolt material release is clearly visible during borescope inspection of the stage 12 rotor disc assembly rear face. Based on an engineering review, a redesign has been introduced to reduce the loading on the OGV retaining bolts, introduced by mandatory service bulletin (SB) Tay-72–1498, which is terminating action for this AD.

Manufacturer's Service Information

Rolls-Royce, plc has issued mandatory SB's Tay-72–1483, Revision 2, dated October 20, 2000, Tay-72–1498, dated October 20, 2000, and Tay-72–1498, Revision 1, dated December 1, 2000, that specify procedures for:

- Initial and repetitive borescope inspections, based on bolt cyclic life exposure, of the stage 12 rotor disc assembly for damage due to failed HPC OGV retaining bolts and, if necessary, replacement with serviceable parts.
- Introduction of revised retaining and locking features for the HPC OGV and outer seal spacer, to eliminate stage 12 rotor disc assembly damage and stage 11/12 spacer cracking.

The CAA has classified SB's Tay-72–1483, Revision 2, dated October 20, 2000; and Tay-72–1498, Revision 1, dated December 1, 2000; as mandatory and issued AD 005–12–99, dated December 2, 1999; and AD 003–10–2000, dated December 1, 2000, in order to assure the airworthiness of these RR Tay engines in the UK.

Bilateral Airworthiness Agreement

These engines are manufactured in the UK, and are type certificated for operation in the United States under the provisions of § 21.29 of the Federal Aviation Regulations (14 CFR 21.29) and the applicable bilateral airworthiness agreement. Pursuant to this bilateral airworthiness agreement, the CAA has kept the FAA informed of the situation described above. The FAA has examined the findings of the CAA, reviewed all available information, and determined that AD action is necessary for products of this type design that are certificated for operation in the United States.

FAA's Determination of an Unsafe Condition and Required Actions

Since an unsafe condition has been identified that is likely to exist or develop on other RR models Tay 650–15 and 651–54 turbofan engines of the same type design, this AD is being issued to prevent an uncontained failure of the HPC stage 11/12 disc spacer, which could result in damage to the airplane. This AD requires:

- Initial and repetitive borescope inspections of the stage 12 rotor disc assembly for damage due to failed HPC OGV retaining bolts, and replacement with serviceable parts as required.
- Introduction of revised retaining and locking features for the HPC OGV and outer seal spacer, to eliminate stage 12 rotor disc assembly damage and stage

11/12 spacer cracking due to failed HPC OGV retaining bolts.

The actions must be done in accordance with the service bulletins described previously.

Immediate Adoption of This AD

Since a situation exists that requires the immediate adoption of this regulation, it is found that notice and opportunity for prior public comment hereon are impracticable, and that good cause exists for making this amendment effective in less than 30 days. Therefore, a situation exists that allows the immediate adoption of this regulation.

Comments Invited

Although this action is in the form of a final rule that involves requirements affecting flight safety and, thus, was not preceded by notice and an opportunity for public comment, comments are invited on this rule. Interested persons are invited to comment on this rule by submitting such written data, views, or arguments as they may desire. Communications should identify the Rules Docket number and be submitted in triplicate to the address specified under the caption **ADDRESSES.** All communications received on or before the closing date for comments will be considered, and this rule may be amended in light of the comments received. Factual information that supports the commenter's ideas and suggestions is extremely helpful in evaluating the effectiveness of the AD action and determining whether additional rulemaking action would be needed.

Comments are specifically invited on the overall regulatory, economic, environmental, and energy aspects of the rule that might suggest a need to modify the rule. All comments submitted will be available, both before and after the closing date for comments, in the Rules Docket for examination by interested persons. A report that summarizes each FAA-public contact concerned with the substance of this AD will be filed in the Rules Docket.

Commenters wishing the FAA to acknowledge receipt of their comments submitted in response to this action must submit a self-addressed, stamped postcard on which the following statement is made: ''Comments to Docket Number 2001–NE–02–AD.'' The postcard will be date stamped and returned to the commenter.

Regulatory Analysis

This final rule does not have federalism implications, as defined in Executive Order 13132, because it would not have a substantial direct effect on the States, on the relationship between the national government and the States, or on the distribution of power and responsibilities among the various levels of government. Accordingly, the FAA has not consulted with state authorities prior to publication of this final rule.

The FAA has determined that this regulation is an emergency regulation that must be issued immediately to correct an unsafe condition in aircraft, and is not a ''significant regulatory action'' under Executive Order 12866. It has been determined further that this action involves an emergency regulation under DOT Regulatory Policies and Procedures (44 FR 11034, February 26, 1979). If it is determined that this emergency regulation otherwise would be significant under DOT Regulatory Policies and Procedures, a final regulatory evaluation will be prepared and placed in the Rules Docket. A copy of it, if filed, may be obtained from the Rules Docket at the location provided under the caption **ADDRESSES**.

List of Subjects in 14 CFR Part 39

Air transportation, Aircraft, Aviation safety, Incorporation by reference, Safety.

Adoption of the Amendment

Accordingly, pursuant to the authority delegated to me by the Administrator, the Federal Aviation Administration amends part 39 of the Federal Aviation Regulations (14 CFR part 39) as follows:

PART 39—AIRWORTHINESS DIRECTIVES

1. The authority citation for part 39 continues to read as follows:

Authority: 49 U.S.C. 106(g), 40113, 44701.

§ 39.13 [Amended]

2. Section 39.13 is amended by adding the following new airworthiness directive:

2002–01–29 Rolls-Royce, plc: Amendment 39–12624. Docket No. 2001–NE–02–AD.

Applicability

This airworthiness directive (AD) is applicable to Rolls-Royce, plc. (RR) models Tay 650–15 and 651–54 turbofan engines with high pressure compressor (HPC) outlet guide vane (OGV) retaining bolts part numbers (P/N's) BLT3602, DU909, and DU818 installed. These engines are installed on, but not limited to Boeing 727 and Fokker F.28 Mark 0100 airplanes.

Note 1: This AD applies to each engine identified in the preceding applicability provision, regardless of whether it has been modified, altered, or repaired in the area subject to the requirements of this AD. For engines that have been modified, altered, or repaired so that the performance of the requirements of this AD is affected, the owner/operator must request approval for an alternative method of compliance in accordance with paragraph (e) of this AD. The request should include an assessment of the effect of the modification, alteration, or repair on the unsafe condition addressed by this AD; and, if the unsafe condition has not been eliminated, the request should include specific proposed actions to address it.

Compliance

Compliance with this AD is required as indicated, unless already done.

To prevent an uncontained failure of the HPC stage 11/12 disc spacer, which could result in damage to the airplane, do the following:

Initial Inspection

(a) Perform borescope inspection to the rear side of the stage 12 rotor disc in accordance with paragraph 3.A.(1) of the Accomplishment Instructions of RR Mandatory Service Bulletin (SB) Tay-72–1483, Revision 2, dated October 20, 2000, at or before accumulating 8,000 cycles on the OGV retaining bolts, or within 30 days from the effective date of this AD, whichever occurs later. If damage is observed on the stage 12 rotor disc, replace unserviceable parts with serviceable parts as necessary.

Repetitive Inspections

(b) Thereafter, perform repetitive borescope inspections of the rear side of the stage 12 rotor disc no earlier than 1,800 and no later than 2,200 cycles-since-last-inspection, or no later than 18 months since-last-inspection, whichever occurs first, in accordance with paragraph 3.A.(1) of the Accomplishment Instructions of RR mandatory SB Tay-72–1483, Revision 2, dated October 20, 2000. If damage is observed on the stage 12 rotor disc, replace unserviceable parts with serviceable parts as necessary.

OGV Retaining Bolt Replacement

(c) For engines that had OGV bolts replaced with new bolts P/N's BLT3602, DU909, and DU818 as specified in RR SB Tay-72–1484, the initial and repetitive inspection requirements, based on engine cycles-since-bolt installation, are the same as specified in paragraphs (a) and (b) of this AD.

Terminating Action for the Inspections Required by This AD

(d) Before October 1, 2005 for Tay 650–15 engines, and before October 1, 2012 for Tay 651–54 engines, install new design retaining and locking hardware for the HPC OGV and outer seal housing assembly, in accordance with paragraph 3 of the Accomplishment Instructions of RR mandatory SB Tay-72–1498, dated October 20, 2000, or RR mandatory SB Tay-72–1498, Revision 1, dated December 1, 2000. After performing this action, the inspections specified in paragraphs (a) through (c) of this AD are no longer required.

Alternative Methods of Compliance

(e) An alternative method of compliance or adjustment of the compliance time that

provides an acceptable level of safety may be used if approved by the Manager, Engine Certification Office (ECO). Operators must submit their requests through an appropriate FAA Principal Maintenance Inspector, who may add comments and then send it to the Manager, ECO.

Note 2: Information concerning the existence of approved alternative methods of compliance with this airworthiness directive, if any, may be obtained from the ECO.

Special Flight Permits

(f) Special flight permits may be issued in accordance with §§ 21.197 and 21.199 of the Federal Aviation Regulations (14 CFR 21.197 and 21.199) to operate the airplane to a location where the requirements of this AD can be done.

Documents That Have Been Incorporated by Reference

(g) The inspections and replacements must be done in accordance with the following Rolls-Royce plc, mandatory SB's:

Document No.	Pages	Revision	Date
SB Tay-72–1483	1–4	2	October 20, 2000.
	5	Original	December 2, 1999.
Appendix 1	1–4	2	October 20, 2000.
Appendix 2	1–2	2	October 20, 2000.
Total pages: 11.			
SB Tay-72–1498	1–38	Original	October 20, 2000.
Total pages: 38.			
SB Tay-72–1498	1–38	1	December 1, 2000
Total pages: 38.			

The incorporations by reference were approved by the Director of the Federal Register in accordance with 5 U.S.C. 552(a) and 1 CFR part 51. Copies may be obtained from Rolls-Royce plc, PO Box 31 Derby, DE24 8BJ, United Kingdom; telephone 011–44–1332–242424; fax 011–44–1332–249936. Copies may be inspected, by appointment, at the FAA, New England Region, Office of the Regional Counsel, 12 New England Executive Park, Burlington, MA; or at the Office of the Federal Register, 800 North Capitol Street, NW., suite 700, Washington, DC.

Note 3: The subject of This AD is addressed in Civil Airworthiness Authority airworthiness directives AD 005–12–99, dated December 2, 1999; and AD 003–10–2000, dated December 1, 2000, in order to assure the airworthiness of these RR Tay engines in the UK.

Effective Date of This AD

(h) This amendment becomes effective on February 15, 2002.

Issued in Burlington, Massachusetts, on January 18, 2002.

Thomas A. Boudreau,

Acting Manager, Engine and Propeller Directorate, Aircraft Certification Service.

[FR Doc. 02–2060 Filed 1–30–02; 8:45 am]

BILLING CODE 4910–13–P

DEPARTMENT OF TRANSPORTATION

Federal Aviation Administration

14 CFR Part 71

[Airspace Docket No. 01–AEA–21FR]

Establishment of Class E Airspace; St. Mary's Hospital Heliport, MD

AGENCY: Federal Aviation Administration (FAA), DOT.

ACTION: Final rule.

SUMMARY: This action establishes Class E airspace at St. Mary's Hospital Heliport, MD. Development of an Area Navigation (RNAV), Helicopter RNAV137 approach, for the St. Mary's Hospital Heliport, MD has made action necessary. Controlled airspace extending upward from 700 feet Above Ground Level (AGL) is needed to contain aircraft executing the approach to the St. Mary's Hospital Heliport.

EFFECTIVE DATE: 0901 UTC February 21, 2002.

FOR FURTHER INFORMATION CONTACT: Mr. Francis Jordan, Airspace Specialist, Airspace Branch, AEA–520, Air Traffic Division, Eastern Region, Federal Aviation Administration, 1 Aviation Plaza, Jamaica, New York 11434–4809, telephone: (718) 553–4521.

SUPPLEMENTARY INFORMATION:

History

On August 28, 2001 a notice proposing to amend Part 71 of the Federal Aviation Regulations (14 CFR part 71) by establishing Class E airspace extending upward from 700 feet Above Ground Level (AGL) for an RNAV, Helicopter RNAV137 approach to the St. Mary's Hospital Heliport, MD was published in the **Federal Register** (44 FR 45200–45201).

Interested parties were invited to participate in this rulemaking proceeding by submitting written comments on the proposal to the FAA on or before July 11, 2001. No comments to the proposal were received. The rule is adopted as proposed. The coordinates for this airspace docket are based on North American Datum 83.

Class E airspace areas designations for airspace extending upward from 700 feet or more above the surface of the earth are published in paragraph 6005 of FAA order 7400.9J, dated August 31, 2001 and effective September 16, 2001, which in incorporated by reference in 14 CFR 71.1. The Class E airspace designation listed in this document will be published in the Order.

The Rule

This amendment to Part 71 of the Federal Aviation Regulations (14 CFR part 71) provides controlled Class E airspace extending upward from 700 feet above the surface for aircraft conducting Instrument Flight Rules (IFR) operations at the St. Mary's Hospital Heliport, MD.

The FAA has determined that this regulation only involves an established body of technical regulations for which frequent and routine amendments are necessary to keep them operationally current. Therefore, this regulation: (1) Is not a ''significant regulatory action'' under Executive Order 12866; (2) is not a ''significant rule'' under DOT Regulatory Policies and Procedures (44 FR 11034; February 26, 1979); and (3) does not warrant preparation of a Regulatory Evaluation as the anticipated impact is so minimal. Since this is a routine matter that will only affect air traffic procedures and air navigation it is certified that this rule will not have significant economic impact on a substantial number of small entities under the criteria of the Regulatory Flexibility Act.

List of Subjects in 14 CFR Part 71

Airspace, Incorporation by reference, Navigation (air).

Adoption of the Amendment

In consideration of the foregoing, the Federal Aviation Administration amends 14 CFR part 71 as follows:

PART 71—[AMENDED]

1. The authority citation for 14 CFR Part 71 continues to read as follows:

Authority: 49 U.S.C. 106(g), 40103, 40113, 40120; EO 10854, 24 FR 9565, 3 CFR, 1959–1063 Comp., p. 389.

§ 71.1 [Amended]

2. The incorporation by reference in 14 CFR 71.1 of Federal Aviation Administration Order 7400.9J, Airspace Designations and Reporting Points, dated August 31, 2001 and effective September 16, 2001, is amended as follows:

Paragraph 6005 Class E airspace areas extending upward from 700 feet or more above the surface of the earth.

AEA MD E5, St. Mary's Hospital [NEW]

St. Mary's Hospital Heliport
(Lat. 38°18′04″ N., long. 76°38′12″ W.)
Point in Space Coordinates
(Lat. 38°19′32″ N., long. 76°40′27″ W.)

That airspace extending upward from 700 feet above the surface within a 6 mile radius of the point in space for the SIAP to the St. Mary's Hospital Heliport.

Issued in Jamaica, New York on October 29, 2001.

Richard J. Ducharme,

Assistant Manager, Air Traffic Division, Eastern Region.

[FR Doc. 02–1005 Filed 1–30–02; 8:45 am]

BILLING CODE 4910–13–M

DEPARTMENT OF TRANSPORTATION

Federal Aviation Administration

14 CFR Part 71

[Airspace Docket No. 01–AEA–22FR]

Establishment of Class E Airspace; Easton Memorial Hospital Heliport, MD

AGENCY: Federal Aviation Administration (FAA), DOT.

ACTION: Final rule.

SUMMARY: This action establishes Class E airspace at Easton Memorial Hospital Heliport, Easton, MD. Development of an Area Navigation (RNAV), Helicopter RNAV036 approach, for the Easton Memorial Hospital Heliport, MD has made this action necessary. Controlled airspace extending upward from 700 feet Above Ground Level (AGL) is needed to contain aircraft executing the approach to the Easton Memorial Hospital Heliport.

EFFECTIVE DATE: 0901 UTC February 21, 2002.

FOR FURTHER INFORMATION CONTACT: Mr. Francis Jordan, Airspace Specialist, Airspace Branch, AEA–520, Air Traffic Division, Eastern Region, Federal Aviation Administration, 1 Aviation Plaza, Jamaica, New York 11434–4809, telephone: (718) 553–4521.

SUPPLEMENTARY INFORMATION:

History

On August 28, 2001 a notice proposing to amend Part 71 of the Federal Aviation Regulations (14 CFR part 71) by establishing Class E airspace extending upward from 700 feet Above Ground Level (AGL) for an RNAV, Helicopter RNAV036 approach to the Easton Memorial Hospital Heliport, Easton, MD, was published in the **Federal Register** (66 FR 45198–45199).

Interested parties were invited to participate in this rulemaking proceeding by submitting written comments on the proposal to the FAA on or before September 27, 2001. No comments to the proposal were received. The rule is adopted as proposed. The coordinates for this airspace docket are based on North American Datum 83.

Class E airspace areas designations for airspace extending upward from 700 feet or more above the surface of the earth are published in paragraph 6005 of FAA Order 7400.9J, dated August 31, 2001 and effective September 16, 2001, which is incorporated by reference in 14 CFR 71.1. The Class E airspace designation listed in this document will be published in the Order.

The Rule

This amendment to Part 71 of the Federal Aviation Regulations (14 CFR part 71) provides controlled Class E airspace extending upward from 700 feet above the surface for aircraft conducting Instrument Flight Rules (IFR) operations at the Easton Memorial Hospital Heliport, Easton, MD.

The FAA has determined that this regulation only involves an established body of technical regulations for which frequent and routine amendments are necessary to keep them operationally current. Therefore, this regulation: (1) Is not a ''significant regulatory action'' under Executive Order 12866; (2) is not a ''significant rule'' under DOT Regulatory Policies and Procedures (44 FR 11034; February 26, 1979); and (3) does not warrant preparation of a Regulatory Evaluation as the anticipated impact is so minimal. Since this a routine matter that will only affect air traffic procedures and air navigation it is certified that this rule will not have significant economic impact on a substantial number of small entities under the criteria of the Regulatory Flexibility Act.

List of Subjects in 14 CFR Part 71

Airspace, Incorporation by reference, Navigation (air).

Adoption of the Amendment

In consideration of the forging, the Federal Aviation Administration amends 14 CFR part 71 as follows:

PART 71—[AMENDED]

1. The authority citation for 14 CFR Part 71 continues to read as follows:

Authority: 49 U.S.C. 106(g), 40103, 40113, 40120; EO 10854, 24 FR 9565, 3 CFR, 1959–1963 Comp., p. 389.

§ 71.1 [Amended]

2. The incorporation by reference in 14 CFR 71.1 of Federal Aviation Administration Order 7400.9J, Airspace Designations and Reporting Points, dated August 31, 2001, and effective September 16, 2001, is amended as follows:

Paragraph 6005 Class E airspace areas extending upward from 700 feet or more above the surface of the earth.

AEA MD E5, Easton Memorial Hospital [NEW]

Easton Memorial Hospital Heliport
(Lat. 38°46′08″ N., long. 76°04′22″ W.)
Point in Space Coordinates
(Lat. 38°46′18″ N., long. 76°06′10″ W.)

That airspace extending upward from 700 feet above the surface within a 6 mile radius of the point in space for the SIAP to the Easton Memorial Hospital Heliport, Easton, MD.

Issued in Jamaica, New York on October 29, 2001.

Richard J. Ducharme,

Assistant Manager, Air Traffic Division, Eastern Region.

[FR Doc. 02–1006 Filed 1–30–02; 8:45 am]

BILLING CODE 4910–13–M

DEPARTMENT OF TRANSPORTATION

Federal Aviation Administration

14 CFR Part 71

[Airspace Docket No. 01–AWP–29]

Amendment of Honolulu Class E5 Airspace Area Legal Description

AGENCY: Federal Aviation Administration (FAA) DOT.

ACTION: Final rule.

SUMMARY: This rule amends the legal description of the Honolulu International Airport Class E5 airspace area. The amended description replaces all references to Naval Air Station (NAS) Barbers Point with Kalaeloa, John Rogers Field.

EFFECTIVE DATE: 0901 UTC, February 21, 2002.

FOR FURTHER INFORMATION CONTACT: Debra Trindle, Airspace Specialist, Airspace Branch, AWP–520.10, Air Traffic Division, Western-Pacific Region, Federal Aviation Administration, 15000 Aviation Boulevard, Lawndale, California 90261, telephone (310) 725–6613.

SUPPLEMENTARY INFORMATION:

History

In 1999, the United States Navy vacated NAS Barbers Point under the mandates of the Base Realignment and Closure Act. The airport was renamed Kalaeloa, John Rogers Field on September 9, 1999. The existing legal description for the Honolulu International Airport Class E5 airspace area still refers to NAS Barbers Point. This rule amends that description to reflect the correct name of Kalaeloa, John Rogers Field. It does not change the dimensions, configuration, or operating requirements of the affected airspace.

Class E5 airspace is published in Paragraph 6005 of FAA Order 7400.9J, Airpsace Designations and Reporting Points, dated August 31, 2001 and effective September 16, 2002, which is incorporated by reference in 14 CFR 71.1. The Class E5 airspace designation listed in this document would be published subsequently in this Order.

The Rule

This amendment to 14 CFR part 71 of the Federal Aviation Regulations amend the Class E5 airspace for Honolulu.

The FAA has determined that this regulation only involves an established body of technical regulations for which frequent and routine amendments are necessary to keep them operationally current. Therefore, this regulation—(1) is no a ''significant regulatory action'' under Executive Order 12866; (2) is not a ''significant rule'' under DOT Regulatory Policies and Procedures (44 FR 11034; February 26, 1979); and (3) does not warrant preparation of a Regulatory Evaluation as the anticipated impact is so minimal. Since this is a routine matter that will only affect air traffic procedures and air navigation, it is certified that this rule would not have a significant economic impact on a substantial number of small entities under the criteria of the Regulatory Flexibility Act.

List of Subjects 14 CFR Part 71

Airspace, Incorporation by reference, Navigation (air).

Adoption of the Amendment

In consideration of the foregoing, the Federal Aviation Administration amends 14 CFR part 71 as follows:

PART 71—DESIGNATION OF CLASS A, CLASS B, CLASS C, CLASS D AND CLASS E AIRSPACE AREAS; AIRWAYS; ROUTES; AND REPORTING POINTS

1. The authority citation for 14 CFR part 71 continues to read as follows:

Authority: 49 U.S.C. 106(g), 40103, 40113, 40120; E.O. 10854, 24 FR 9565, 3 CFR, 1959–1963 Comp., p. 389.

§ 71.1 [Amended]

2. The incorporation by reference in 14 CFR 71.1 of the Federal Aviation Administration Order 7400.9J, Airspace Designations and Reporting Points, dated August 31, 2001, and effective September 16, 2001, is amended as follows:

Paragraph 6005 Class E airspace areas extending upward from 700 feet or more above the surface of the earth.

* * * * *

AWP HI E5 Honolulu International Airport, HI [Revised]

Honolulu International Airport, HI
(Lat. 21°19′08″ N., long. 157°55′21″ W.)
Kalaeloa John Rogers Field
(Lat. 21°18′21″ N., long. 158°04′20″ W.)
Honolulu VORTAC
(Lat. 21°18′30″ N., long. 157°55′50″W.)

That airspace extending upward from 700 feet above the surface south and southeast of Honolulu International Airport beginning at lat. 21°20′19″ N., long. 157°51′05″ W., thence south to lat. 21°15′19″ N., long. 157°49′05″ W., thence east along the shoreline to where the shoreline intercepts the Honolulu VORTAC 15-mile radius, then clockwise along the 15-mile radius of the Honolulu VORTAC to intercept the Honolulu VORTAC 241° radial, then northeast bound along the Honolulu VORTAC 241° radial to intercept the 4.3-mile radius south of Kalaeloa John Rogers Field, then counterclockwise along the arc of the 4.3-mile radius of Kalaeloa John Rogers Field to and counterclockwise along the arc of a 5-mile radius of the Honolulu VORTAC to the Honolulu VORTAC 106° radial, then westbound along the Honolulu 106° radial to the 4-mile radius of the Honolulu VORTAC, then counterclockwise along the 4-mile radius to intercept the Honolulu VORTAC 071° radial, thence to the point of beginning and that airspace beginning at lat. 21°10′25″ N., long. 158°11′22″ W., to lat. 21°16′05″ N., long. 158°14′35″ W.; to lat. 21°16′30″ N., long. 158°13′46″ W.; to lat. 21°16′50″ N., long. 158°00′00″ W., to the point of beginning.

* * * * *

Issued in Los Angeles, California, on November 14, 2001.

Dawna J. Vicars,

Acting Manager, Air Traffic Division, Western-Pacific Region.

[FR Doc. 02–862 Filed 1–30–02; 8:45 am]

BILLING CODE 4910–13–M

DEPARTMENT OF TRANSPORTATION

Coast Guard

33 CFR Parts 100 and 165

[COTP Honolulu 01–008]

RIN 2115–AA97 and 2115–AA98

Security Zones; Oahu, Maui, HI, and Kauai, HI

AGENCY: Coast Guard, DOT.

ACTION: Temporary final rule.

SUMMARY: The Coast Guard is establishing security zones in designated waters adjacent to the islands of Oahu, Maui, Hawaii, and Kauai, HI for a period of six months. These security zones are necessary to protect personnel, vessels, and facilities from acts of sabotage or other subversive acts, accidents, or other causes of a similar nature during operations and will extend from the surface of the water to the ocean floor. When the zones are activated, entry into these zones is prohibited unless authorized by the Coast Guard Captain of the Port Honolulu, HI. This rule also terminates a previous rule published October 17, 2001 creating security zones in these areas until March 22, 2002.

DATES: This rule is effective from 6 a.m. HST October 19, 2001, to 4 p.m. HST April 19, 2002. 33 CFR 165.T14–058 published October 17, 2001 (66 FR 52693), is terminated.

ADDRESSES: The docket for this rulemaking is maintained by the Commanding Officer, U.S. Coast Guard Marine Safety Office Honolulu, 433 Ala Moana Blvd., Honolulu, Hawaii 96813. Docket material is available for inspection or copying at this location between 7 a.m. and 4:30 p.m. on weekdays, except Federal holidays.

FOR FURTHER INFORMATION CONTACT: LCDR M. A. Willis, Coast Guard Marine Safety Office Honolulu, Hawaii at (808) 522–8260.

SUPPLEMENTARY INFORMATION:

Regulatory Information

Recent terrorist incidents in New York and Washington, DC have called for the implementation of additional measures to protect the national

security. These temporary rules are intended to provide for the safety and security of the public, maritime commerce, and transportation, by creating security zones in designated harbors, anchorages, facilities, and adjacent navigable waters of the United States. As authorized by 5 U.S.C. 553, we did not publish a notice of proposed rulemaking (NPRM) for this regulation and there is good cause for us to make the rule effective in less than 30 days after publication in the **Federal Register**. Publishing an NPRM and delaying this rule from becoming effective would be contrary to the public interest since immediate action is needed to protect persons, vessels, and facilities in various areas on the islands of Oahu, Maui, Hawaii, and Kauai, HI. There was insufficient time to publish a proposed rule in advance of the event or to provide a delayed effective date. Under these circumstances, following normal rulemaking procedures would be impracticable.

Background and Purpose

The Coast Guard is establishing designated security zones in the waters adjacent to the islands of Oahu, Maui, Hawaii, and Kauai, HI for a period of six-months. These security zones are necessary to protect personnel, vessels, and facilities from acts of sabotage or other subversive acts, accidents, or other causes of a similar nature during operations. These security zones extend from the surface of the water to the ocean floor. Entry into these zones is prohibited unless authorized by the Coast Guard Captain of the Port Honolulu, HI. Representatives of the Captain of the Port Honolulu will enforce these security zones. The Captain of the Port may be assisted by other federal or state agencies. Periodically, by Broadcast Notice to Mariners, the Coast Guard will announce the existence or status of the temporary security zones in this rule.

Regulatory Evaluation

This temporary final rule is not a significant regulatory action under section 3(f) of Executive Order 12866 and does not require an assessment of potential costs and benefits under section 6(a)(3) of that order. The Office of Management and Budget has not reviewed it under that order. It is not significant under the regulatory policies and procedures of the Department of Transportation (DOT) (44 FR 11040, February 26, 1979). The U.S. Coast Guard expects the economic impact of this action to be so minimal that a full Regulatory Evaluation under paragraph 10(e) of the regulatory policies and procedures of DOT is unnecessary. This expectation is based on the temporary duration of the zone and the limited geographic area affected by it.

Small Entities

Under the Regulatory Flexibility Act (5 U.S.C. 601–612), we considered whether this rule would have a significant economic impact on a substantial number of small entities. The term ''small entities'' comprises small businesses, not-for-profit organizations that are independently owned and operated and are not dominant in their fields, and governmental jurisdictions with populations of less than 50,000. The Coast Guard certifies under 5 U.S.C. 605(b) that this regulation will not have a significant economic impact on a substantial number of small entities. No small business impacts are anticipated due to the small size of the zone and the short duration of the security zone in any one area.

Assistance for Small Entities

Because we did not anticipate any small business impacts, we did not offer assistance to small entities in understanding the rule.

Collection of Information

This rule calls for no new collection of information under the Paperwork Reduction Act of 1995 (44 U.S.C. 3501–3520 *et seq.*).

Federalism

The Coast Guard has analyzed this rule under Executive Order 13132, and has determined this rule does not have implications for federalism under that Order.

Unfunded Mandates Reform Act

The Unfunded Mandates Reform Act of 1995 (2 U.S.C. 1531–1538) governs the issuance of Federal regulations that require unfunded mandates. An unfunded mandate is a regulation that requires a State, local, or tribal government or the private sector to incur direct costs without the Federal Government having first provided the funds to pay those unfunded mandate costs. This rule will not impose an unfunded mandate.

Indian Tribal Governments

This rule does not have tribal implications under Executive Order 13175, Consultation and Coordination with Indian Tribal Governments, because it does not have a substantial direct effect on one or more Indian tribes, on the relationship between the Federal Government and Indian tribes, or on the distribution of power and responsibilities between the Federal Government and Indian tribes.

Taking of Private Property

This rule will not affect a taking of private property or otherwise have taking implications under Executive Order 12630, Governmental Actions and Interference with Constitutionally Protected Property Rights.

Civil Justice Reform

This rule meets applicable standards in sections 3(a) and 3(b)(2) of Executive Order 12988, Civil Justice Reform, to minimize litigation, eliminate ambiguity, and reduce burden.

Protection of Children

We have analyzed this rule under Executive Order 13045, Protection of Children from Environmental Health Risks and Safety Risks. This rule is not an economically significant rule and does not concern an environmental risk to health or risk to safety that may disproportionately affect children.

Environment

The Coast Guard considered the environmental impact of this action and concluded that, under figure 2–1, paragraph (34)(g) of Commandant Instruction M16475.1D, this rule is categorically excluded from further environmental documentation. As an emergency action, the environmental analysis requisite regulatory consultations, and categorical exclusion determination, will be prepared and submitted after establishment of this temporary security zone, and will be available for inspection or copying where indicated under addresses.

List of Subjects

33 CFR Part 110

Anchorage grounds.

33 CFR Part 165

Harbors, Marine safety, Navigation (water), Reporting and recordkeeping requirements, Security measures, Waterways.

For the reasons set out in the preamble, the Coast Guard amends 33 CFR parts 110 and 165 as follows:

PART 110—ANCHORAGE REGULATIONS

1. The authority citation for part 110 continues to read as follows:

Authority: 33 U.S.C. 471, 1221 through 1236, 2030, 2035, 2071; 49 CFR 1.46 and 33 CFR 1.05–1(g).

2. From 6 a.m. October 19, 2001, until 4 p.m. April 19, 2002, in § 110.235, add a new paragraph (c) to read as follows:

§ 110.235 Pacific Ocean (Mamala Bay), Honolulu Harbor, Hawaii (Datus: NAD 83)

* * * * *

(c) Before entering in the anchorage grounds in this section, you must first obtain permission from the Captain of the Port Honolulu.

PART 165—REGULATED NAVIGATION AREAS AND LIMITED ACCESS AREAS

3. The authority citation for part 165 continues to read as follows:

Authority: 33 U.S.C. 1231; 50 U.S.C. 191, 33 CFR 1.05–1(g), 6.04–1, 6.04–6, 160.5, 49 CFR 1.46.

§ 165.T14–058 [Removed]

4. Remove § 165.T14–058.

5. From 6 a.m. October 19, 2001, until 4 p.m. April 19, 2002, a new § 165.T14–061 is temporarily added to read as follows:

§ 165.T14–061 Security Zones: Oahu, Maui, Hawaii, and Kauai, HI.

(a) *Location.* The following areas are security zones:

(1) All waters of Honolulu Harbor and entrance channel, Keehi Lagoon, and General Anchorages A, B, C, and D as defined in 33 CFR 110.235 that are shoreward of the following coordinates: The shoreline of a line connecting 21°17.68′ N, 157°52.0′ W; thence due south to 21°16.0′ N, 157°52.0′ W; thence due west to 21°16.0′ N, 157°55.58′ W; thence due north to Honolulu International Airport Reef Runway at 21°18.25′ N, 157°55.58′ W.

(2) The waters around the Tesoro Single Point Mooring extending 1,000 yards in all directions from position 21°16.2′ N, 158°05.3′ W.

(3) The Kahului Harbor and Entrance Channel, Maui, HI consisting of all waters shoreward of the COLREGS DEMARCATION line. (See 33 CFR 80.1460).

(4) All waters within the Nawiliwili Harbor, Kauai, HI shoreward of the COLREGS DEMARCATION line (See 33 CFR 80.1450).

(5) All waters of Port Allen Harbor, Kauai, HI shoreward of the COLREGS DEMARCATION line (See 33 CFR 80.1440).

(6) Hilo Harbor and Entrance Channel, Hawaii, HI consisting of all waters shoreward of the COLREGS DEMARCATION line (See 33 CFR 80.1480).

(7) The waters extending out 500 yards in all directions from cruise ship vessels anchored within 3 miles of

(i) Lahaina Small Boat Harbor, Maui, between Makila Point and Puunoa Point.

(ii) Kailua-Kona Small Boat Harbor, Hawaii, between Keahulolu Point and Puapuaa Point.

(b) *Designated representative.* A designated representative of the Captain of the Port is any Coast Guard commissioned officer, warrant or petty officer that has been authorized by the Captain of the Port Honolulu to act on his behalf. The following officers have or will be designated by the Captain of the Port Honolulu: The senior Coast Guard boarding officer on each vessel enforcing the security zone.

(c) *Regulations.*

(1) In accordance with the general regulations in § 165.33 of this part, entry into these zones is prohibited unless authorized by the Captain of the Port or his designated representatives.

(2) The existence or status of the temporary security zones in this section will be announced periodically by Broadcast Notice to Mariners.

(d) *Authority.* The authority for this section is 33 U.S.C. 1226; 49 CFR 1.46.

(e) *Effective dates:* This section is effective from 6 a.m. HST October 19, 2001, until 4 p.m. HST April 19, 2002.

Dated: October 19, 2001.

R. D. Utley,

Rear Admiral, Coast Guard Commander, Fourteenth Coast Guard District.

[FR Doc. 02–2356 Filed 1–30–02; 8:45 am]

BILLING CODE 4910–15–P

DEPARTMENT OF TRANSPORTATION

Coast Guard

33 CFR Part 165

[CGD11–01–008]

RIN 2115–AA97

Security Zone; Naval Supply Center Pier, San Diego Bay, CA

AGENCY: Coast Guard, DOT.

ACTION: Final rule.

SUMMARY: The Coast Guard is creating a permanent security zone around the Fleet Industrial Supply Center (formerly the Naval Supply Center) Pier at Naval Base, San Diego, at the request of the U.S. Navy. The establishment of this security zone is needed to ensure the physical protection of naval vessels moored at the Fleet Industrial Supply Center pier.

DATES: This rule becomes effective December 17, 2001.

ADDRESSES: Documents as indicated in this preamble are available for inspection or copying at the Coast Guard Marine Safety Office, 2716 North Harbor Drive, San Diego, CA 92101–1064 between 7:30 a.m. and 4 p.m., Monday through Friday, except Federal holidays.

FOR FURTHER INFORMATION CONTACT: Lieutenant Christopher Hochschild, Vessel Traffic Management Section, 11th Coast Guard District, telephone (510) 437–2940; e-mail: *chochschild@d11.uscg.mil.*

SUPPLEMENTARY INFORMATION:

Regulatory History

On June 13, 2001, the Coast Guard published a notice of proposed rulemaking (NPRM) entitled Security Zone; Naval Supply Center Pier, San Diego Bay, CA in the **Federal Register** (66 FR 31870). The Coast Guard did not receive any letters commenting on the proposed rule. No public hearing was requested, and none was held. Since publication of the NPRM, the Navy has notified the Coast Guard that it has changed the name of the pier from the Naval Supply Center Pier to the Fleet Industrial Supply Center Pier.

In keeping with the requirements of 5 U.S.C. 553(d)(3), the Coast Guard finds that good cause exists for making this regulation effective immediately. The Coast Guard balanced the necessity for immediate implementation against the principles of fundamental fairness which require that all effected persons be afforded a reasonable time to prepare for the effective date of the rule. In light of the events of September 11, 2001, the Coast Guard believes it is in the national interest to immediately implement the rule to provide for security zone coverage around the pier. The Coast Guard further believes that it has provided the public adequate notice and time to adapt to the security zone's implementation through the NPRM. In addition, the California Coastal Commission, in its Coast Zone Management Act Determination of October 16, 2001 discussed the minimal impact the zone will have on the public: ''These areas [including the subject security zone] are not typically used for recreational or commercial boating, and the restrictions will not adversely affect navigation or boating in San Diego Bay.'' The Coast Guard was delayed slightly in implementing this final rule because the attacks on the World Trade Center in New York and the Pentagon in Washington, DC caused the Coast Guard and the Navy to re-examine the whole scheme of security zones contemplated for San Diego to ensure they adequately met force protection and national defense needs.

Background and Purpose

The Coast Guard is creating a permanent security zone around the newly-named Fleet Industrial Supply Center Pier at Naval Base, San Diego (formerly known as the Naval Supply Center Pier). The security zone consists of the waters of San Diego Bay extending approximately 100 feet out from the north, west, and south sides of the Fleet Industrial Supply Center Pier.

Currently, there is a restricted area around the Fleet Industrial Supply Center Pier, 33 CFR 334.870(d). The Navy believes that this restricted area, by itself, is insufficient to adequately safeguard its vessels. The Navy has been reviewing all aspects of its anti-terrorism and force protection posture in response to the attack on the USS *COLE.* The attacks of September 11, 2001 and the heightened state of military alert resulting therefrom add substantial urgency to the creation of this security zone. The creation of this security zone will help safeguard vessels moored at the Fleet Industrial Supply Center and waterside facilities from destruction, loss, or injury from sabotage or other subversive acts, accidents, or other causes of a similar nature.

The creation of this security zone will also prevent recreational and commercial craft from interfering with military operations involving naval vessels and it will protect transiting recreational and commercial vessels, and their respective crews, from the navigational hazards posed by such military operations. Unlike the current restricted area, under this proposed rule entry into, transit through, or anchoring within this security zone would be prohibited unless authorized by the Captain of the Port, or the Commander, Navy Region Southwest.

Vessels or persons violating this section would be subject to the penalties set forth in 50 U.S.C. 192 and 18 U.S.C. 3571: seizure and forfeiture of the vessel, a monetary penalty of not more than $250,000, and imprisonment for not more than 10 years.

The U.S. Coast Guard may be assisted in the patrol and enforcement of this security zone by the U.S. Navy.

Discussion of Comments and Changes

No comments were received during the NPRM comment period.

To reflect the pier's name change, the Coast Guard has made the following minor technical amendments to the final rule that did not appear in the NPRM: In paragraph (a) of the final rule, the Naval Supply Center Pier has been re-named as the Fleet Industrial Supply Center Pier. Also, to reflect a name change resulting from the Navy's 1998 regionalization process, the Coast Guard has made the following minor technical amendment to the final rule which did not appear in the NPRM: In paragraph (b) of the final rule, Commanding Officer, Naval Base San Diego has been re-named as the Commander, Navy Region Southwest.

Regulatory Evaluation

This rule is not a ''significant regulatory action'' under section 3(f) of Executive Order 12866, Regulatory Planning and Review, and does not require an assessment of potential costs and benefits under section 6(a)(3) of that Order. The Office of Management and Budget has not reviewed it under that Order. It is not ''significant'' under the regulatory policies and procedures of the Department of Transportation (DOT)(44 FR 11040, February 26, l979). This rule will have minimal additional impact on vessel traffic because it is already a restricted area codified at 33 CFR 334.870.

Small Entities

Under the Regulatory Flexibility Act (5 U.S.C. 601–612), we have considered whether this rule would have a significant economic impact on a substantial number of small entities. The term ''small entities'' comprises small businesses, not-for-profit organizations that are independently owned and operated and are not dominant in their fields, and governmental jurisdictions with populations of less than 50,000. The Coast Guard certifies under 5 U.S.C. 605(b) that this rule will not have a significant economic impact on a substantial number of small entities.

Collection of Information

This rule calls for no new collection of information under the Paperwork Reduction Act (44 U.S.C. 3501–3520).

Federalism

The Coast Guard has analyzed this rule under Executive Order 13132 and has determined that it does not have implications for federalism.

Unfunded Mandates Reform Act

The Unfunded Mandates Reform Act of 1995 (2 U.S.C. 1531–1538) governs the issuance of Federal regulations that require unfunded mandates. An unfunded mandate is a regulation that requires State, local, or tribal government or the private sector to incur direct costs without the Federal Government's having first provided the funds to pay those costs.

Taking of Private Property

This rule will not effect a taking of private property or otherwise have taking implications under Executive Order 12630, Governmental Actions and Interference with Constitutionally Protected Property Rights.

Civil Justice Reform

This rule meets applicable standards in sections 3(a) and 3(b)(2) of Executive Order 12988, Civil Justice Reform, to minimize litigation, eliminate ambiguity, and reduce burden.

Protection of Children

We have analyzed this rule under Executive Order 13045, Protection of Children from Environmental Health Risks and Safety Risks. This rule is not an economically significant rule and does not create an environmental risk to health or risk to safety that may disproportionately affect children.

Indian Tribal Governments

This rule does not have tribal implications under Executive Order 13175, Consultation and Coordination with Indian Tribal Governments, because it does not have a substantial direct effect on one or more Indian tribes, on the relationship between the Federal Government and Indian tribes, or on the distribution of power and responsibilities between the Federal Government and Indian tribes.

Energy Effects

We have analyzed this rule under Executive Order 13211, Actions Concerning Regulations That Significantly Affect Energy Supply, Distribution, or Use. We have determined that it is not a ''significant energy action'' under that order because it is not a ''significant regulatory action'' under Executive Order 12866 and is not likely to have a significant adverse effect on the supply, distribution, or use of energy. It has not been designated by the Administrator of the Office of Information and Regulatory Affairs as a significant energy action. Therefore, it does not require a Statement of Energy Effects under Executive Order 13211.

Environment

We considered the environmental impact of this rule and concluded that under figure 2–1, paragraph (34)(g) of Commandant Instruction M16475.lD, this rule is categorically excluded from further environmental documentation. This rule creates a security zone on top of an already existing restricted area. The rules are only slightly different and the physical characteristics of the surrounding waters does not change at

all. A Categorical Exclusion Determination and an Environmental Analysis Checklist are available in the docket at the location specified under the **ADDRESSES** portion of this rulemaking.

List of Subjects in 33 CFR Part 165

Harbors, Marine safety, Navigation (water), Reporting and recordkeeping requirements, Security measures, Waterways.

For the reasons discussed in the preamble, the Coast Guard amends 33 CFR part 165 as follows:

PART 165—REGULATED NAVIGATION AREAS AND LIMITED ACCESS AREAS

1. The authority citation for 33 CFR part 165 continues to read as follows:

Authority: [33 U.S.C. 1231; 50 U.S.C. 191, 33 CFR 1.05–1(g) 6.04–1, 6.04–6, 160.5; 49 CFR 1.46.]

2. A new § 165.1121 is added to read as follows:

§ 165.1121 Security Zone: Fleet Supply Center Industrial Pier, San Diego, CA.

(a) *Location.* The following area is a security zone: the waters of San Diego Bay extending approximately 100 feet from the north, west, and south sides of the Fleet Industrial Supply Center enclosed by lines connecting the following points: Beginning at 32°42′50″ N, 117°10′25″ W (Point A); to 32°42′50″ N, 117°10′38″ W (Point B); to 32°42′54″ N, 117°10′38″ W (Point C); to 32°42′54″ N, 117°10′25″ W (Point D).

(b) *Regulations.* In accordance with the general regulations in § 165.33, entry into the area of this zone is prohibited unless authorized by the Captain of the Port or the Commander, Navy Region Southwest. Section 165.33 also contains other general requirements.

(c) *Enforcement.* The U.S. Coast Guard may be assisted in the patrol and enforcement of this security zone by the U.S. Navy.

Dated: December 17, 2001.

E.R. Riutta,

Vice Admiral, U.S. Coast Guard, Commander, Eleventh Coast Guard District.

[FR Doc. 02–2361 Filed 1–30–02; 8:45 am]

BILLING CODE 4910–15–P

DEPARTMENT OF TRANSPORTATION

Coast Guard

33 CFR Part 165

[CGD11–01–011]

RIN 2115–AA97

Security Zone; Naval Amphibious Base, San Diego Bay, CA

AGENCY: Coast Guard, DOT.

ACTION: Final rule.

SUMMARY: The Coast Guard is creating a permanent security zone around the Naval Amphibious Base, Coronado, California, at the request of the U.S. Navy. This security zone will be established inside an already exiting restricted area defined by the U.S. Navy maintained buoys. The establishment of this security zone is needed to ensure the physical protection of naval vessels and their activities at Naval Amphibious Base, Coronado.

DATES: This rule becomes effective December 17, 2001.

ADDRESSES: Documents as indicated in this preamble are available for inspection or copying at the Coast Guard Marine Safety Office, 2716 North Harbor Drive, San Diego, CA 92101–1064 between 7:30 a.m. and 4 p.m., Monday through Friday, except Federal holidays.

FOR FURTHER INFORMATION CONTACT: Lieutenant Christopher Hochschild, Vessel Traffic Management Section, 11th Coast Guard District, telephone (510) 437–2940; e-mail: *chochschild@d11.uscg.mil.*

SUPPLEMENTARY INFORMATION:

Regulatory History

On June 13, 2001, the Coast Guard published a notice of proposed rulemaking (NPRM) entitled Security Zone; Naval Amphibious Base, San Diego Bay, CA in the **Federal Register** (66 FR 31872). The Coast Guard did not receive any letters commenting on the proposed rule. No public hearing was requested, and none was held.

In keeping with the requirements of 5 U.S.C. 553(d)(3), the Coast Guard finds that good cause exists for making this regulation effective immediately. The Coast Guard balanced the necessity for immediate implementation against the principles of fundamental fairness which require that all effected persons be afforded a reasonable time to prepare for the effective date of the rule.

In light of the events of September 11, 2001, the Coast Guard believes it is in the national interest to immediately implement the rule to avoid any gap in security zone coverage. The Coast Guard further believes that it has provided the public adequate notice and time to adapt to the security zone's implementation through the NPRM and the Navy's placement of small buoys marking the zone. In addition, the California Coastal Commission, in its Coast Zone Management Act Determination of October 16, 2001 discussed the minimal impact the zone will have on the public: ''These areas [including the subject security zone] are not typically used for recreational or commercial boating, and the restrictions will not adversely affect navigation or boating in San Diego Bay.''

The Coast Guard was delayed slightly in implementing this final rule because the attacks on the World Trade Center in New York and the Pentagon in Washington, DC caused the Coast Guard and the Navy to re-examine the whole scheme of security zones contemplated for San Diego to ensure they adequately met force protection and national defense needs.

Background and Purpose

The Coast Guard is creating a permanent security zone around the Naval Amphibious Base, Coronado, California, at the request of the U.S. Navy. The security zone will consist of the waters of San Diego Bay around the perimeter of the Naval Amphibious Base, extending approximately 100 yards out.

Currently, there is a restricted area around the Naval Amphibious Base, 33 CFR 334.860. The Navy believes that this restricted area, by itself, is insufficient to adequately safeguard its vessels and the military operations involving the base. The Navy has been reviewing all aspects of its anti-terrorism and force protection posture in response to the attack on the USS COLE. The attacks of September 11, 2001 and the heightened state of military alert resulting therefrom add substantial urgency to the creation of this security zone. This security zone will safeguard vessels moored at the Naval Amphibious Base and waterside facilities from destruction, loss, or injury from sabotage or other subversive acts, accidents, or other causes of a similar nature.

The creation of this security zone will also prevent recreational and commercial craft from interfering with military operations involving naval vessels and it will protect transiting recreational and commercial vessels, and their respective crews, from the navigational hazards posed by such military operations. Unlike the current

restricted area regulation, this security zone regulation will not allow vessels to transit through or anchor in the security zone unless authorized by the Captain of the Port, the Commander, Navy Region Southwest.

Vessels or persons violating this section would be subject to the penalties set forth in 50 U.S.C. 192 and 18 U.S.C. 3571: seizure and forfeiture of the vessel, a monetary penalty of not more than $250,000, and imprisonment for not more than 10 years.

The U.S. Coast Guard may be assisted in the patrol and enforcement of this security zone by the U.S. Navy.

Discussion of Comments and Changes

No comments were received during the notice of proposed rulemaking's comment period.

To reflect a naming change resulting from the Navy's 1998 regionalization process, the Coast Guard has made the following minor technical amendment to the final rule which did not appear in the NPRM: In paragraph (b) of the final rule, Commanding Officer, Naval Base San Diego has been re-named as the Commander, Navy Region Southwest. Also, a phrase was added at the end of the coordinates to clarify that the zone is enclosed.

Regulatory Evaluation

This final rule is not a ''significant regulatory action'' under section 3(f) of Executive Order 12866, Regulatory Planning and Review, and does not require an assessment of potential costs and benefits under section 6(a)(3) of that Order. The Office of Management and Budget has not reviewed it under that Order. It is not ''significant'' under the regulatory policies and procedures of the Department of Transportation (DOT) (44 FR 11040, February 26, 1979). This rule will have minimal additional impact on vessel traffic because it is being created inside an already existing restricted area codified at 33 CFR 334.860.

Small Entities

Under the Regulatory Flexibility Act (5 U.S.C. 601–612), we have considered whether this rule would have a significant economic impact on a substantial number of small entities. The term ''small entities'' comprises small businesses, not-for-profit organizations that are independently owned and operated and are not dominant in their fields, and governmental jurisdictions with populations of less than 50,000.

The Coast Guard certifies under 5 U.S.C. 605(b) that this final rule will not have a significant economic impact on a substantial number of small entities.

Collection of Information

This final rule calls for no new collection of information under the Paperwork Reduction Act (44 U.S.C. 3501–3520).

Federalism

The Coast Guard has analyzed this final rule under Executive Order 13132 and has determined that it does not have implications for federalism.

Unfunded Mandates Reform Act

The Unfunded Mandates Reform Act of 1995 (2 U.S.C. 1531–1538) governs the issuance of Federal regulations that require unfunded mandates. An unfunded mandate is a regulation that requires State, local, or tribal government or the private sector to incur direct costs without the Federal Government's having first provided the funds to pay those costs. This final rule does not impose an unfunded mandate.

Taking of Private Property

This final rule will not effect a taking of private property or otherwise have taking implications under Executive Order 12630, Governmental Actions and Interference with Constitutionally Protected Property Rights.

Civil Justice Reform

This final rule meets the applicable standards in sections 3(a) and 3(b)(2) of Executive Order 12988, Civil Justice Reform, to minimize litigation, eliminate ambiguity, and reduce burden.

Protection of Children

The Coast Guard has analyzed this final rule under Executive Order 13045, Protection of Children from Environmental Health Risks and Safety Risks. This rule is not an economically significant rule and does not create an environmental risk to health or risk to safety that may disproportionately affect children.

Indian Tribal Governments

This final rule does not have tribal implications under Executive Order 13175, Consultation and Coordination with Indian Tribal Governments, because it does not have a substantial direct effect on one or more Indian tribes, on the relationship between the Federal Government and Indian tribes, or on the distribution of power and responsibilities between the Federal Government and Indian tribes.

Energy Effects

The Coast Guard has analyzed this rule under Executive Order 13211, Actions Concerning Regulations That Significantly Affect Energy Supply, Distribution, or Use and has determined that it is not a ''significant energy action'' under that order because it is not a ''significant regulatory action'' under Executive Order 12866 and is not likely to have a significant adverse effect on the supply, distribution, or use of energy. It has not been designated by the Administrator of the Office of Information and Regulatory Affairs as a significant energy action. Therefore, it does not require a Statement of Energy Effects under Executive Order 13211.

Environment

The Coast Guard considered the environmental impact of this rule and concluded that under figure 2–1, paragraph (34)(g) of Commandant Instruction M16475.lD, this rule is categorically excluded from further environmental documentation. This rule creates a security zone inside an already existing restricted area and the physical characteristics of the surrounding waters is not altered. A Categorical Exclusion Determination and an Environmental Analysis Checklist are available in the docket at the location specified under the **ADDRESSES** portion of this rulemaking.

List of Subjects in 33 CFR Part 165

Harbors, Marine safety, Navigation (water), Reporting and record keeping requirements, Security measures, Waterways.

For the reasons discussed in the preamble, the Coast Guard amends 33 CFR part 165 as follows:

PART 165—REGULATED NAVIGATION AREAS AND LIMITED ACCESS AREAS

1. The authority citation for 33 CFR part 165 continues to read as follows:

Authority: 33 U.S.C. 1231; 50 U.S.C. 191, 33 CFR 1.05–1(g) 6.04–1, 6.04–6, 160.5; 49 CFR 1.46.

2. Add § 165.1120 to read as follows:

§ 165.1120 Security Zone; Naval Amphibious Base, San Diego, CA.

(a) *Location.* The following area is a security zone: the waters of San Diego Bay, enclosed by lines connecting the following points: Beginning at 32°40′30.0″ N, 117°10′03.0″ W (Point A); thence running northeasterly to 32°40′54.0″ N, 117°09′35.5″ W (Point B); thence running northeasterly to 32°40′55.0″ N, 117°09′27.0″ W (Point C); thence running southeasterly to

32°40′43.0″ N, 117°09′09.0″ W (Point D); thence running southerly to 32°40′39.0″ N, 117°09′08.0″ (Point E); thence running southwesterly to 32°40′30.0″ N, 117°09′12.9″ W (Point F); thence running a short distance to 32°40′29.0″ N, 117°09′14.0″ W (Point G); thence running southwesterly to 32°40′26.0″ N, 117°09′17.0″ W (Point H); thence running northwesterly to the shoreline to 32°40′ 31.0″ N, 117°09′ 22.5″ W (Point I), thence running along the shoreline to the beginning point.

(b) *Regulations.* In accordance with the general regulations in § 165.33 of this part, entry into the area of this zone is prohibited unless authorized by the Captain of the Port or the Commander, Navy Region Southwest.

(c) *Enforcement.* The U.S. Coast Guard may be assisted in the patrol and enforcement of this security zone by the U.S. Navy.

Dated: December 17, 2001.

E.R. Riutta,

Vice Admiral, Coast Guard, Commander, Eleventh Coast Guard District.

[FR Doc. 02–2360 Filed 1–30–02; 8:45 am]

BILLING CODE 4910–15–P

DEPARTMENT OF TRANSPORTATION

Coast Guard

33 CFR Part 165

[CGD11–98–003]

RIN 2115–AA97

Security Zone; San Diego Bay, CA

AGENCY: Coast Guard, DOT.

ACTION: Final rule.

SUMMARY: The Coast Guard is expanding the geographical boundaries of the permanent security zone at the newly-named Naval Base Coronado, California. This base was known as Naval Air Station North Island, but the Navy has recently changed its name. There were previously only two aircraft carriers home-ported at Naval Base Coronado; however, a third aircraft carrier has been designated to homeport there. The modification and expansion of this security zone is needed to ensure the physical protection of this third aircraft carrier at Naval Base Coronado.

DATES: This rule becomes effective December 17, 2001.

ADDRESSES: Documents as indicated in this preamble are available for inspection or copying at the Coast Guard Marine Safety Office, 2716 North Harbor Drive, San Diego, CA 92101–1064 between 7:30 a.m. and 4 p.m., Monday through Friday, except Federal holidays.

FOR FURTHER INFORMATION CONTACT: Lieutenant Christopher Hochschild, Vessel Traffic Management Section, 11th Coast Guard District, telephone (510) 437–2940; e-mail: *chochschild@d11.uscg.mil.*

SUPPLEMENTARY INFORMATION:

Regulatory History

The Coast Guard published a notice of proposed rulemaking (NPRM) on May 15, 1998 (63 FR 27019). That NPRM proposed to modify the Security Zone adjacent to Naval Air Station, North Island, 33 CFR 165.1104. No comments were received. Publication of the final rule was delayed because of the need for operational reassessment. Due to the length of time since publication of the NPRM, we published a supplemental notice of proposed rulemaking (SNPRM) on April 23, 2001 in the **Federal Register** (66 FR 20413) and provided an additional opportunity for comment on this rulemaking. We did not receive any letters commenting on the proposed rule. No public hearing was requested, and none was held. Two months after the SNPRM was published, technical amendments were made to Title 33 of the Code of Federal Regulations, including a redesignation of § 165.1105 as 165.1104 (66 FR 33637, 33642, June 25, 2001).

In keeping with the requirements of 5 U.S.C. 553(d)(3), the Coast Guard finds that good cause exists for making this regulation effective immediately. The Coast Guard balanced the necessity for immediate implementation against the principles of fundamental fairness which require that all effected persons be afforded a reasonable time to prepare for the effective date of the rule. In light of the events of September 11, 2001, the Coast Guard believes it is in the national interest to immediately implement the rule to avoid any gap in security zone coverage. The Coast Guard further believes that it has provided the public adequate notice and time to adapt to the security zone's implementation through the original NPRM, the supplemental NPRM and the Navy's placement of small buoys marking the zone. In addition, the California Coastal Commission, in its Coast Zone Management Act Determination of October 16, 2001 discussed the minimal impact the zone will have on the public: ''These areas [including the subject security zone] are not typically used for recreational or commercial boating, and the restrictions will not adversely affect navigation or boating in San Diego Bay.'' The Coast Guard was delayed slightly in implementing this final rule because the attacks on the World Trade Center in New York and the Pentagon in Washington, DC caused the Coast Guard and the Navy to re-examine the whole scheme of security zones contemplated for San Diego to ensure they adequately met force protection and national defense needs.

Background and Purpose

The Coast Guard is modifying the security zone, enlarging it to accommodate the home-porting of a new aircraft carrier at Naval Base Coronado. There were previously only two aircraft carriers home-ported there; however, a third aircraft carrier has been designated to homeport at Naval Base Coronado.

The security zone will be expanded at its northwest tip to the west by 0.144 square miles. It will be expanded in its mid-section to the north by 0.182 square miles.

The Navy requires the modification and expansion of this security zone to accommodate the home-porting of this third aircraft carrier. The expanded zone will prevent recreational and commercial craft from interfering with military operations involving all naval vessels home-ported at Naval Base Coronado, and it will protect transiting recreational and commercial vessels, and their respective crews, from the navigational hazards posed by such military operations. In addition, the Navy has been reviewing all aspects of its anti-terrorism and force protection posture in response to the attack on the USS COLE. The attacks of September 11, 2001 and the heightened state of military alert resulting therefrom add substantial urgency to the expansion of this security zone. The modification and expansion of this security zone will help safeguard vessels and waterside facilities from destruction, loss, or injury from sabotage or other subversive acts, accidents, or other causes of a similar nature. Entry into, transit through, or anchoring within this security zone is prohibited unless authorized by the Captain of the Port, the Commander, Naval Air Force, U.S. Pacific Fleet, the Commander, Navy Region Southwest, or the Commanding Officer, Naval Base Coronado.

Vessels or persons violating this section would be subject to the penalties set forth in 50 U.S.C. 192 and 18 U.S.C. 3571: seizure and forfeiture of the vessel, a monetary penalty of not more than $250,000, and imprisonment for not more than 10 years.

The U.S. Coast Guard may be assisted in the patrol and enforcement of this security zone by the U.S. Navy.

Discussion of Comments and Changes

No comments were received during the NPRM or SNPRM comment periods.

To reflect naming changes resulting from the Navy's 1998 regionalization process, the Coast Guard has made the following minor technical amendments that did not appear in the NPRM or SNPRM: In paragraph (a) of the final rule, Naval Air Station North Island has been re-named as Naval Base Coronado. In paragraph (b) of the final rule, the Commanding Officer, Naval Air Station North Island has been re-named as Commanding Officer, Naval Base Coronado.

Regulatory Evaluation

This rule is not a ''significant regulatory action'' under section 3(f) of Executive Order 12866, Regulatory Planning and Review, and does not require an assessment of potential costs and benefits under section 6(a)(3) of that Order. The Office of Management and Budget has not reviewed it under that Order. It is not ''significant'' under the regulatory policies and procedures of the Department of Transportation (DOT) (44 FR 11040, February 26, 1979). This rule will have minimal additional impact on vessel traffic because it is only a slight modification and expansion of the existing security zone codified at 33 CFR 165.1104.

Small Entities

Under the Regulatory Flexibility Act (5 U.S.C. 601–612), we have considered whether this rule would have a significant economic impact on a substantial number of small entities. The term ''small entities'' comprises small businesses, not-for-profit organizations that are independently owned and operated and are not dominant in their fields, and governmental jurisdictions with populations of less than 50,000.

The Coast Guard certifies under 5 U.S.C. 605(b) that this rule will not have a significant economic impact on a substantial number of small entities.

Collection of Information

This rule calls for no new collection of information under the Paperwork Reduction Act of (44 U.S.C. 3501–3520).

Federalism

The Coast Guard has analyzed this final rule under Executive Order 13132 and has determined that it does not have implications for federalism.

Unfunded Mandates Reform Act

The Unfunded Mandates Reform Act of 1995 (2 U.S.C. 1531–1538) governs the issuance of Federal regulations that require unfunded mandates. An unfunded mandate is a regulation that requires State, local, or tribal government or the private sector to incur direct costs without the Federal Government's having first provided the funds to pay those costs.

Taking of Private Property

This final rule will not effect a taking of private property or otherwise have taking implications under Executive Order 12630, Governmental Actions and Interference with Constitutionally Protected Property Rights.

Civil Justice Reform

This final rule meets applicable standards in sections 3(a) and 3(b)(2) of Executive Order 12988, Civil Justice Reform, to minimize litigation, eliminate ambiguity, and reduce burden.

Protection of Children

We have analyzed this rule under Executive Order 13045, Protection of Children from Environmental Health Risks and Safety Risks. This rule is not an economically significant rule and does not create an environmental risk to health or risk to safety that may disproportionately affect children.

Indian Tribal Governments

This final rule does not have tribal implications under Executive Order 13175, Consultation and Coordination with Indian Tribal Governments, because it does not have a substantial direct effect on one or more Indian tribes, on the relationship between the Federal Government and Indian tribes, or on the distribution of power and responsibilities between the Federal Government and Indian tribes.

Energy Effects

We have analyzed this rule under Executive Order 13211, Actions Concerning Regulations That Significantly Affect Energy Supply, Distribution, or Use. We have determined that it is not a ''significant energy action'' under that order because it is not a ''significant regulatory action'' under Executive Order 12866 and is not likely to have a significant adverse effect on the supply, distribution, or use of energy. It has not been designated by the Administrator of the Office of Information and Regulatory Affairs as a significant energy action. Therefore, it does not require a Statement of Energy Effects under Executive Order 13211.

Environment

We considered the environmental impact of this rule and concluded that under figure 2–1, paragraph (34)(g) of Commandant Instruction M16475.lD, this rule is categorically excluded from further environmental documentation. This rule is only a slight expansion of an area which already has existing restrictions, and it does not alter any physical state of the surrounding waters. A Categorical Exclusion Determination and an Environmental Analysis Checklist are available in the docket at the location specified under the **ADDRESSES** portion of this rulemaking.

List of Subjects in 33 CFR Part 165

Harbors, Marine safety, Navigation (water), Reporting and recordkeeping requirements, Security measures, Waterways.

For the reasons discussed in the preamble, the Coast Guard amends 33 CFR part 165 as follows:

PART 165—REGULATED NAVIGATION AREAS AND LIMITED ACCESS AREAS

1. The authority citation for 33 CFR part 165 continues to read as follows:

Authority: 33 U.S.C. 1231; 50 U.S.C. 191, 33 CFR 1.05–1(g), 6.04–1, 6.04–6, 160.5; 49 CFR 1.46.

2. In § 165.1104, revise paragraph (a) and (b) and add a new paragraph (c) to read as follows:

§ 165.1104 Security Zone: San Diego Bay, California.

(a) *Location.* The following area is a security zone: on the waters along the northern shoreline of Naval Base Coronado, the area enclosed by the following points: Beginning at 32° 42′53.0″ N, 117°11′45.0″ W (Point A); thence running northerly to 32° 42′ 55.5″ N, 117° 11′45.0″ W (Point B); thence running easterly to 32°42′55.0″ N, 117°11′30.5″ W (Point C); thence running southeasterly to 32°42′40.0″ N, 117°11′06.5″ W (Point D); thence running southerly to 32°42′37.5″ N, 117°11′07.0″ W (Point E); thence running southerly to 32°42′28.5″ N, 117°11′11.0″ W (Point F); thence running southeasterly to 32°42′22.0″ N, 117°10′48.0″ W (Point G); thence running southerly to 32°42′13.0″ N, 117° 10′51.0″ W (Point H); thence running generally northwesterly along the shoreline of Naval Base Coronado to the place of beginning.

(b) *Regulations.* In accordance with the general regulations in § 165.33 of this part, entry into the area of this zone is prohibited unless authorized by the Captain of the Port, the Commander, Naval Air Force, U.S. Pacific Fleet, the Commander, Navy Region Southwest, or the Commanding Officer, Naval Base

Coronado. Section 165.33 also contains other general requirements.

(c) *Enforcement.* The U.S. Coast Guard may be assisted in the patrol and enforcement of this security zone by the U.S. Navy.

Dated: December 17, 2001.

E.R. Riutta,

Vice Admiral, Coast Guard, Commander, Eleventh Coast Guard District.

[FR Doc. 02–2359 Filed 1–30–02; 8:45 am]

BILLING CODE 4910–15–U

DEPARTMENT OF TRANSPORTATION

Coast Guard

33 CFR Part 165

[CGD11–01–010]

RIN 2115–AA97

Security Zone; San Diego Bay

AGENCY: Coast Guard, DOT.

ACTION: Final rule.

SUMMARY: The Coast Guard is expanding the geographical boundaries of the permanent security zone at Naval Base, San Diego, California, at the request of the U.S. Navy. The proposed security zone will expand across the mouth of Chollas Creek. The modification and expansion of this security zone is needed to ensure the physical protection of naval vessels moored at Naval Base, San Diego.

DATES: This rule becomes effective December 17, 2001.

ADDRESSES: Documents as indicated in this preamble are available for inspection or copying at the Coast Guard Marine Safety Office, 2716 North Harbor Drive, San Diego, CA 92101–1064 between 7:30 a.m. and 4 p.m., Monday through Friday, except Federal holidays.

FOR FURTHER INFORMATION CONTACT: Lieutenant Christopher Hochschild, Vessel Traffic Management Section, 11th Coast Guard District, telephone (510) 437–2940; e-mail *chochschild@d11.uscg.mil.*

SUPPLEMENTARY INFORMATION:

Regulatory History

On April 23, 2001, the Coast Guard published a notice of proposed rulemaking (NPRM) entitled Security Zone; San Diego Bay in the **Federal Register** (66 FR 20412) to amend § 165.1102 in Title 33 of the Code of Federal Regulations (CFR). Two months later, technical amendments were made to Title 33 of the CFR, including a redesignation of § 165.1102 as 165.1101 (66 FR 33637, 33642, June 25, 2001). The Coast Guard did not receive any letters commenting on the proposed rule. No public hearing was requested, and none was held.

In keeping with the requirements of 5 U.S.C. 553(d)(3), the Coast Guard finds that good cause exists for making this regulation effective immediately. The Coast Guard balanced the necessity for immediate implementation against the principles of fundamental fairness which require that all effected persons be afforded a reasonable time to prepare for the effective date of the rule. In light of the events of September 11, 2001, the Coast Guard believes it is in the national interest to immediately implement the rule to avoid any gap in security zone coverage.

The Coast Guard further believes that it has provided the public adequate notice and time to adapt to the security zone's implementation through the NPRM. In addition, the California Coastal Commission, in its Coast Zone Management Act Determination of October 16, 2001 discussed the minimal impact the zone will have on the public: ''These areas [including the subject security zone] are not typically used for recreational or commercial boating, and the restrictions will not adversely affect navigation or boating in San Diego Bay.''

The Coast Guard was delayed slightly in implementing this final rule because the attacks on the World Trade Center in New York and the Pentagon in Washington, DC caused the Coast Guard and the Navy to re-examine the whole scheme of security zones contemplated for San Diego to ensure they adequately met force protection and national defense needs.

Background and Purpose

The Coast Guard is modifying the security zone, enlarging it by approximately 300 square yards to enclose the mouth of Chollas Creek so that unauthorized vessels or persons cannot transit into Chollas Creek.

The modification and expansion of this security zone is needed to ensure the physical protection of naval vessels moored in the area. The modification and expansion of this security zone will also prevent recreational and commercial craft from interfering with military operations involving all naval vessels home-ported at Naval Base, San Diego and it will protect transiting recreational and commercial vessels, and their respective crews, from the navigational hazards posed by such military operations. The Navy has been reviewing all aspects of its anti-terrorism and force protection posture in response to the attack on the USS COLE.

The attacks of September 11, 2001 and the heightened state of military alert resulting therefrom add substantial urgency to the creation of this security zone. The modification and expansion of this security zone will safeguard vessels and waterside facilities from destruction, loss, or injury from sabotage or other subversive acts, accidents, or other causes of a similar nature. Entry into, transit through, or anchoring within this security zone is prohibited unless authorized by the Captain of the Port or the Commander, Navy Region Southwest.

Vessels or persons violating this section would be subject to the penalties set forth in 50 U.S.C. 192 and 18 U.S.C. 3571: seizure and forfeiture of the vessel, a monetary penalty of not more than $250,000, and imprisonment for not more than 10 years.

The U.S. Coast Guard may be assisted in the patrol and enforcement of this security zone by the U.S. Navy.

Discussion of Comments and Changes

No comments were received during the NPRM comment period.

To reflect a naming change resulting from the Navy's 1998 regionalization process, the Coast Guard has made the following minor technical amendment to the final rule which did not appear in the NPRM: In paragraph (a) of the final rule, Naval Station, San Diego has been re-named as Naval Base, San Diego. In paragraph (b) of the final rule, Commander, Naval Base San Diego has been re-named as Commander, Navy Region Southwest. Also in paragraph (b), Commanding Officer, Naval Station, San Diego has been deleted.

Regulatory Evaluation

This rule is not a ''significant regulatory action'' under section 3(f) of Executive Order 12866, Regulatory Planning and Review, and does not require an assessment of potential costs and benefits under section 6(a)(3) of that Order. The Office of Management and Budget has not reviewed it under that Order. It is not ''significant'' under the regulatory policies and procedures of the Department of Transportation (DOT)(44 FR 11040, February 26, 1979). This rule will have minimal additional impact on vessel traffic because it is only a slight modification and expansion of the existing security zone codified at 33 CFR 165.1102.

Small Entities

Under the Regulatory Flexibility Act (5 U.S.C. 601–612), we have considered whether this rule would have a

significant economic impact on a substantial number of small entities. The term ''small entities'' comprises small businesses, not-for-profit organizations that are independently owned and operated and are not dominant in their fields, and governmental jurisdictions with populations of less than 50,000. The Coast Guard certifies under 5 U.S.C. 605(b) that this rule will not have a significant economic impact on a substantial number of small entities.

Collection of Information

This final rule calls for no new collection of information under the Paperwork Reduction Act (44 U.S.C. 3501–3520).

Federalism

The Coast Guard has analyzed this final rule under Executive Order 13132 and has determined that it does not have implications for federalism.

Unfunded Mandates Reform Act

The Unfunded Mandates Reform Act of 1995 (2 U.S.C. 1531–1538) governs the issuance of Federal regulations that require unfunded mandates. An unfunded mandate is a regulation that requires State, local, or tribal government or the private sector to incur direct costs without the Federal Government's having first provided the funds to pay those costs.

Taking of Private Property

This final rule will not affect a taking of private property or otherwise have taking implications under Executive Order 12630, Governmental Actions and Interference with Constitutionally Protected Property Rights.

Civil Justice Reform

This final rule meets the applicable standards in sections 3(a) and 3(b)(2) of Executive Order 12988, Civil Justice Reform, to minimize litigation, eliminate ambiguity, and reduce burden.

Protection of Children

The Coast Guard has analyzed this final rule under Executive Order 13045, Protection of Children from Environmental Health Risks and Safety Risks. This rule is not an economically significant rule and does not create an environmental risk to health or risk to safety that may disproportionately affect children.

Indian Tribal Governments

This final rule does not have tribal implications under Executive Order 13175, Consultation and Coordination with Indian Tribal Governments, because it does not have a substantial direct effect on one or more Indian tribes, on the relationship between the Federal Government and Indian tribes, or on the distribution of power and responsibilities between the Federal Government and Indian tribes.

Energy Effects

We have analyzed this rule under Executive Order 13211, Actions Concerning Regulations That Significantly Affect Energy Supply, Distribution, or Use. We have determined that it is not a ''significant energy action'' under that order because it is not a ''significant regulatory action'' under Executive Order 12866 and is not likely to have a significant adverse effect on the supply, distribution, or use of energy. It has not been designated by the Administrator of the Office of Information and Regulatory Affairs as a significant energy action. Therefore, it does not require a Statement of Energy Effects under Executive Order 13211.

Environment

We considered the environmental impact of this rule and concluded that under figure 2–1, paragraph (34)(g) of Commandant Instruction M16475.lD, this rule is categorically excluded from further environmental documentation. This rule is only a slight expansion of an area which already has the same restrictions discussed in the rule, and it does not alter any physical state of the surrounding waters. A Categorical Exclusion Determination and an Environmental Analysis Checklist are available in the docket at the location specified under the **ADDRESSES** portion of this rulemaking.

List of Subjects in 33 CFR Part 165

Harbors, Marine safety, Navigation (water), Reporting and recordkeeping requirements, Security measures, Waterways.

For the reasons discussed in the preamble, the Coast Guard amends 33 CFR part 165 as follows:

PART 165—REGULATED NAVIGATION AREAS AND LIMITED ACCESS AREAS

1. The authority citation for 33 CFR Part 165 continues to read as follows:

Authority: 33 U.S.C. 1231; 50 U.S.C. 191; 33 CFR 1.05–1(g) 6.04–1, 6.04–6, and 160.5; 49 CFR 1.46.

2. In § 165.1101, revise paragraphs (a) and (b) and add a new paragraph (c) to read as follows:

§ 165.1101 Security Zone: San Diego Bay, California.

(a) *Location.* The following area is a security zone: the water area within Naval Base, San Diego enclosed by the following points: Beginning at 32°41′16.5″ N, 117°08′01″ W (Point A); thence running southwesterly to 32°41′06″ N, 117°08′09.3″ W (Point B); thence running southeasterly along the U.S. Pierhead Line to 32°39′36.9″ N, 117°07′23.5″ W (Point C); thence running easterly to 32°39′38.5″ N, 117°07′06.5″ W (Point D); thence running generally northwesterly along the shoreline of the Naval Base to the place of beginning.

(b) In accordance with the general regulations in § 165.33 of this part, entry into the area of this zone is prohibited unless authorized by the Captain of the Port or the Commander, Navy Region Southwest. Section 165.33 also contains other general requirements.

(c) The U.S. Coast Guard may be assisted in the patrol and enforcement of this security zone by the U.S. Navy.

Dated: December 17, 2001.

E.R. Riutta,

Vice Admiral, Coast Guard, Commander, Eleventh Coast Guard District.

[FR Doc. 02–2358 Filed 1–30–02; 8:45 am]

BILLING CODE 4910–15–U

DEPARTMENT OF TRANSPORTATION

Coast Guard

33 CFR Part 165

[COTP Charleston–01–128]

RIN 2115–AA97

Security Zones; Ports of Charleston and Georgetown, SC

AGENCY: Coast Guard, DOT.

ACTION: Temporary final rule.

SUMMARY: The Coast Guard is establishing a temporary moving security zone 100 yards around all tank vessels, passenger vessels and military pre-positioned ships entering or departing the Ports of Charleston and Georgetown, South Carolina. We are also establishing temporary fixed security zones 100 yards around all tank vessels, passenger vessels and military pre-positioned ships when these vessels are moored in the Ports of Charleston and Georgetown, South Carolina. These security zones are needed for national security reasons to protect the public and ports from potential subversive acts. Entry into these zones is prohibited, unless specifically authorized by the Captain of the Port, Charleston, South

Carolina or his designated representative.

DATES: This regulation is effective from 4 a.m. on October 15, 2001 through 11:59 p.m. on June 15, 2002.

ADDRESSES: Comments and material received from the public, as well as documents indicated in this preamble as being available in the docket, are part of [COTP Charleston 01–128] and are available for inspection or copying at Marine Safety Office Charleston, 196 Tradd Street, Charleston, S.C. 29401 between 7:30 a.m. and 4 p.m. Monday through Friday, except Federal holidays.

FOR FURTHER INFORMATION CONTACT: LT James V. Mahney, Coast Guard Marine Safety Office Charleston, at (843) 724–7686.

SUPPLEMENTARY INFORMATION:

Regulatory Information

We did not publish a notice of proposed rulemaking (NPRM) for this regulation. Under 5 U.S.C. 553(b)(B), the Coast Guard finds that good cause exists for not publishing a NPRM. Publishing a NPRM and delaying this rule's effective date would be contrary to the public interest since immediate action is needed to protect the public, ports and waterways of the United States. The Coast Guard will issue a broadcast notice to mariners and place Coast Guard vessels in the vicinity of these zones to advise mariners of the restriction.

For the same reasons, under 5 U.S.C. 553(d)(3), the Coast Guard finds that good cause exists for making this rule effective less than 30 days after publication in the **Federal Register**.

Background and Purpose

Based on the September 11, 2001, terrorist attacks on the World Trade Center buildings in New York and the Pentagon in Arlington, Virginia, there is an increased risk that subversive activity could be launched by vessels or persons in close proximity to the Ports of Charleston and Georgetown, South Carolina, against tank vessels, cruise ships and military pre-positioned vessels entering, departing and moored within these ports. Military pre-positioned ships are U.S. commercial ships on long-term charter to the Military Sealift Command. They are utilized to transport military equipment and cargo. There will be Coast Guard and local police department patrol vessels on scene to monitor traffic through these areas.

The security zone for the Port of Charleston is activated when a subject vessel passes the Charleston entrance lighted whistle buoy C, at approximate position 32°39.36′ N, 79°40.54′ W. The security zone for the Port of Georgetown is activated when a subject vessel passes the lighted whistle buoy WB, at approximate position 33°11.36′ N, 79°05.12′ W. The zone for a vessel is deactivated when the vessel passes these buoys on its departure from port.

The Captain of the Port will notify the public via Marine Safety Radio Broadcast on VHF Marine Band Radio, Channel 22 (157.1 MHz) of all active security zones in the ports by identifying the names of the vessels around which the zones are centered. Entry into these security zones is prohibited, unless specifically authorized by the Captain of the Charleston, South Carolina.

Regulatory Evaluation

This rule is not a significant regulatory action under section 3(f) of Executive Order 12866, Regulatory Planning and Review, and does not require an assessment of potential costs and benefits under section 6(a)(3) of that order. The Office of Management and Budget has not reviewed it under that order. It is not significant under the regulatory policies and procedures of the Department of Transportation (DOT) (44 FR 11040; February 26, 1979) because vessels may be allowed to enter this temporary zone on a case by case basis with the authorization of the Captain of the Port.

Small Entities

Under the Regulatory Flexibility Act (5 U.S.C. 601–612), the Coast Guard considered whether this rule would have a significant economic effect upon a substantial number of small entities. ''Small entities'' include small businesses, not-for-profit organizations that are independently owned and operated and are not dominant in their fields, and governmental jurisdictions with populations of less than 50,000.

The Coast Guard certifies under 5 U.S.C. 605(b) that this rule will not have a significant economic impact on a substantial number of small entities because small entities may be allowed to enter on a case by case basis with the authorization of the Captain of the Port.

Assistance for Small Entities

Under section 213(a) of the Small Business Regulatory Enforcement Fairness Act of 1996 (Public Law 104–121), we offer to assist small entities in understanding the rule so that they can better evaluate its effects on them and participate in the rulemaking process. If the rule will affect your small business, organization, or government jurisdiction and you have questions concerning its provisions or options for compliance, please contact the person listed under **FOR FURTHER INFORMATION CONTACT** for assistance in understanding this rule.

Small businesses may send comments on the actions of Federal employees who enforce, or otherwise determine compliance with, Federal regulations to the Small Business and Agriculture Regulatory Enforcement Ombudsman and the Regional Small each agency's responsiveness to small business. If you wish to comment on actions by employees of the Coast Guard, call 1–888-REG-FAIR (1–888–734–3247).

Collection of Information

This rule calls for no new collection of information requirements under the Paperwork Reduction Act (44 U.S.C. 3501–3520).

Federalism

A rule has implication for federalism under Executive Order 13132, Federalism, if it has a substantial direct effect on State or local governments and would either preempt State law or impose a substantial direct cost of compliance on them. We have analyzed this rule under that Order and have determined that it does not have implications for federalism.

Unfunded Mandates Reform Act

The Unfunded Mandates Reform Act of 1995 (2 U.S.C. 1531–1538) requires Federal agencies to assess the effects of their discretionary regulatory actions. In particular, the Act addresses actions that may result in the expenditure by a State, local, or tribal government, in the aggregate, or by the private sector of $100,000,000 or more in any one year. Though this rule will not result in such an expenditure, we do discuss the effects of this rule elsewhere in this preamble.

Taking of Private Property

This rule will not effect a taking of private property or otherwise have taking implications under Executive Order 12630, Governmental Actions and Interference with Constitutionally Protected Property Rights.

Civil Justice Reform

This rule meets applicable standards in sections 3(a) and 3(b)(2) of Executive Order 12988, Civil Justice Reform, to minimize litigation, eliminate ambiguity, and reduce burden.

Environmental

The Coast Guard has considered the environmental impact of this rule and will prepare a categorical exclusion determination pursuant to Figure 2–1,

paragraph 34(g) of Commandant Instruction M16475.1D.

Protection of Children

We have analyzed this rule under Executive Order 13045, Protection of Children from Environmental Health Risks and Safety Risks. This rule is not an economically significant rule and does not concern an environmental risk to health or risk to safety that may disproportionately affect children.

Indian Tribal Governments

This rule does not have tribal implications under Executive Order 13175, Consultation and Coordination with Indian Tribal Governments, because it does not have a substantial direct effect on one or more Indian tribes, on the relationships between the Federal Government and Indian tribes, or on the distribution of power and responsibilities between the Federal Government and Indian tribes.

Energy Effects

We have analyzed this rule under Executive Order 13211, Actions Concerning Regulations That Significantly Affect Energy Supply, Distribution, or use. We have determined that it is not a ''significant energy action'' under Executive Order 12866 and is not likely to have a significant adverse effect on the supply, distribution, or use of energy. It has not been designated by the Administrator of the Office of Information and Regulatory Affairs as a significant energy action. Therefore, it does not require a Statement of Energy Effects under Executive Order 13211.

List of Subjects in 33 CFR Part 165

Harbors, Marine safety, Navigation (water), Reports and recordkeeping requirements, Security measures, Waterways.

For the reasons discussed in the preamble, the Coast Guard amends 33 CFR part 165, as follows:

PART 165—REGULATED NAVIGATION AREAS AND LIMITED ACCESS AREAS

1. The authority citation for part 165 continues to read as follows:

Authority: 33 U.S.C. 1231; 50 U.S.C. 191, 33 CFR 1.05–1(g), 6.04–1, 6.04–6, 160.5; 49 CFR 1.46.

2. A new temporary § 165.T07–128 is added to read as follows:

§ 165.T07–128 Security Zone; Ports of Charleston and Georgetown, South Carolina.

(a) *Regulated area.* (1) Temporary moving security zones are established 100 yards around all tank vessels, passenger vessels and military pre-positioned ships during transits entering or departing the ports of Charleston and Georgetown, South Carolina. These security zones are activated when a subject vessel passes: Charleston entrance lighted whistle buoy C, at approximate position 32°39.36′ N, 79°40.54′ W when entering the Port of Charleston; lighted whistle buoy WB, at approximate position 33°11.36′ N, 79°05.12′ W when entering the Port of Georgetown.

(2) Temporary fixed security zones are established 100 yards around all tank vessels, passenger vessels and military pre-positioned ships docked in the Ports of Charleston and Georgetown, South Carolina.

(b) *Regulations.* In accordance with the general regulations in § 165.33 of this part, entry into this zone is prohibited except as authorized by the Captain of the Port, or a Coast Guard commissioned, warrant, or petty officer designated by him. The Captain of the Port will notify the public via Marine Safety Radio Broadcast on VHF Marine Band Radio, Channel 13 and 16 (157.1 MHz) of all active security zones in port by identifying the names of the vessels around which they are centered.

(c) *Dates.* This section becomes effective at 4 a.m. on October 15, 2001 and will terminate at 11:59 p.m. on June 15, 2002.

Dated: October 15, 2001.

G.W. Merrick,

Commander, Coast Guard, Captain of the Port.

[FR Doc. 02–2357 Filed 1–30–02; 8:45 am]

BILLING CODE 4910–15–U

DEPARTMENT OF VETERANS AFFAIRS

38 CFR Part 17

RIN 2900–AK01

Compensated Work Therapy/ Transitional Residences Program

AGENCY: Department of Veterans Affairs.

ACTION: Final rule.

SUMMARY: This document amends VA's medical regulations to establish provisions regarding housing under the Compensated Work Therapy/ Transitional Residences program. These provisions are designed to ensure proper management, ensure reasonable payment rates for residents, and ensure that residents stay only for the time necessary to meet the intended goals.

DATES: Effective Date: January 31, 2002.

FOR FURTHER INFORMATION CONTACT: Jamie Ploppert, Program Specialist, Office of Psychosocial Rehabilitation Services (116D), Veterans Health Administration, 757–722–9961, ext. 1123 (this is not a toll-free number).

SUPPLEMENTARY INFORMATION: On March 6, 2001, VA published in the **Federal Register** a proposal to amend VA's Medical regulations to establish provisions regarding housing under the Compensated Work Therapy/ Transitional Residences program (66 FR 13461–63). No comments were received. Based on the rationale set forth in the proposed rule, we are adopting the provisions of the proposed rule as a final rule, with one change regarding the requirements for a house manager.

Under the proposed rule, a house manager was required to be a without-compensation employee of VA. However, upon further reflection, VA has determined that it is not necessary that each house manager be appointed as a without-compensation employee. Accordingly, this provision is removed.

OMB Review

This document has been reviewed by the Office of Management and Budget under Executive Order 12866.

Paperwork Reduction Act

This document contains no provisions constituting a collection of information under the Paperwork Reduction Act (44 U.S.C. 3501–3520).

Regulatory Flexibility Act

The Secretary hereby certifies that the adoption of this final rule does not have a significant economic impact on a substantial number of small entities as they are defined in the Regulatory Flexibility Act, 5 U.S.C. 601–612. This document affects individuals and does not affect small entities. Therefore, pursuant to 5 U.S.C. 605(b), this final rule is exempt from the initial and final regulatory flexibility analysis requirement of sections 603 and 604.

List of Subjects in 38 CFR Part 17

Administrative practice and procedure, Alcohol abuse, Alcoholism, Claims, Day care, Dental health, Drug abuse, Foreign relations, Government contracts, Grant programs-health, Government programs-veterans, Health care, Health facilities, Health professions, Health records, Homeless, Medical and dental schools, Medical devices, Medical research, Mental health programs, Nursing home care, Philippines, Reporting and recordkeeping requirements, Scholarships and fellowships, Travel and transportation expenses, Veterans.

Approved: November 13, 2001.

Anthony J. Principi,

Secretary of Veterans Affairs.

For the reasons set forth in the preamble, 38 CFR part 17 is amended to read as follows:

PART 17—MEDICAL

1. The authority citation for part 17 continues to read as follows:

Authority: 38 U.S.C. 501, 1721, unless otherwise noted.

2. Redesignate § 17.49 as new § 17.48.

3. Add a new § 17.49 to read as follows:

§ 17.49 Compensated Work Therapy/Transitional Residences program.

(a) This section sets forth requirements for persons residing in housing under the Compensated Work Therapy/Transitional Residences program.

(b) House managers shall be responsible for coordinating and supervising the day-to-day operations of the facilities. The local VA program coordinator shall select each house manager and may give preference to an individual who is a current or past resident of the facility or the program. A house manager must have the following qualifications:

(1) A stable, responsible and caring demeanor;

(2) Leadership qualities including the ability to motivate;

(3) Effective communication skills including the ability to interact;

(4) A willingness to accept feedback;

(5) A willingness to follow a chain of command.

(c) Each resident admitted to the Transitional Residence, except for a house manager, must also be in the Compensated Work Therapy program.

(d) Each resident, except for a house manager, must bi-weekly, in advance, pay a fee to VA for living in the housing. The local VA program coordinator will establish the fee for each resident in accordance with the provisions of paragraph (d)(1) of this section.

(1) The total amount of actual operating expenses of the residence (utilities, maintenance, furnishings, appliances, service equipment, all other operating costs) for the previous fiscal year plus 15 percent of that amount equals the total operating budget for the current fiscal year. The total operating budget is to be divided by the average number of beds occupied during the previous fiscal year and the resulting amount is the average yearly amount per bed. The bi-weekly fee shall equal 1/26th of the average yearly amount per bed, except that a resident shall not, on average, pay more than 30 percent of their gross CWT (Compensated Work Therapy) bi-weekly earnings. The VA program manager shall, bi-annually, conduct a review of the factors in this paragraph for determining resident payments. If he or she determines that the payments are too high or too low by more than 5 percent of the total operating budget, he or she shall recalculate resident payments under the criteria set forth in this paragraph, except that the calculations shall be based on the current fiscal year (actual amounts for the elapsed portion and projected amounts for the remainder).

(2) If the revenues of a residence do not meet the expenses of the residence resulting in an inability to pay actual operating expenses, the medical center of jurisdiction shall provide the funds necessary to return the residence to fiscal solvency in accordance with the provisions of this section.

(e) The length of stay in housing under the Compensated Work Therapy/Transitional Residences program is based on the individual needs of each resident, as determined by consensus of the resident and his/her VA Clinical Treatment team. However, the length of stay should not exceed 12 months.

(Authority: 38 U.S.C.1772)

[FR Doc. 02–2364 Filed 1–30–02; 8:45 am]

BILLING CODE 8320–01–P

ENVIRONMENTAL PROTECTION AGENCY

40 CFR Part 52

[AL–200213; FRL–7131–5]

Approval and Promulgation of Air Quality Implementation Plans; Alabama Update to Materials Incorporated by Reference

AGENCY: Environmental Protection Agency (EPA).

ACTION: Final rule; notice of administrative change.

SUMMARY: EPA is updating the materials submitted by Alabama that are incorporated by reference (IBR) into the State implementation plan (SIP). The regulations affected by this update have been previously submitted by the State agency and approved by EPA. This update affects the SIP materials that are available for public inspection at the Office of the Federal Register (OFR), Office of Air and Radiation Docket and Information Center, and the Regional Office.

EFFECTIVE DATE: This action is effective January 31, 2002.

ADDRESSES: SIP materials which are incorporated by reference into 40 CFR part 52 are available for inspection at the following locations: Environmental Protection Agency, Region 4, 61 Forsyth Street, SW, Atlanta, GA 30303; Office of Air and Radiation Docket and Information Center, Air Docket (Mail Code 6102), 401 M Street., SW., Washington, DC. 20460, and Office of the Federal Register, 800 North Capitol Street, NW, Suite 700, Washington, DC.

FOR FURTHER INFORMATION CONTACT: Mr. Sean Lakeman at the above Region 4 address or at (404) 562–9043.

SUPPLEMENTARY INFORMATION: The SIP is a living document which the State can revise as necessary to address the unique air pollution problems in the state. Therefore, EPA from time to time must take action on SIP revisions containing new and/or revised regulations as being part of the SIP. On May 22, 1997, (62 FR 27968) EPA revised the procedures for incorporating by reference Federally-approved SIPs, as a result of consultations between EPA and OFR. The description of the revised SIP document, IBR procedures and ''Identification of plan'' format are discussed in further detail in the May 22, 1997, **Federal Register** document. On December 22, 1998, EPA published a document in the **Federal Register** (63 FR 70669) beginning the new IBR procedure for Alabama. In this document EPA is doing the first update to the material being IBRed.

EPA has determined that today's rule falls under the ''good cause'' exemption in section 553(b)(3)(B) of the Administrative Procedures Act (APA) which, upon finding ''good cause,'' authorizes agencies to dispense with public participation and section 553(d)(3) which allows an agency to make a rule effective immediately (thereby avoiding the 30-day delayed effective date otherwise provided for in the APA). Today's rule simply codifies provisions which are already in effect as a matter of law in Federal and approved State programs. Under section 553 of the APA, an agency may find good cause where procedures are ''impractical, unnecessary, or contrary to the public interest.'' Public comment is ''unnecessary'' and ''contrary to the public interest'' since the codification only reflects existing law. Immediate notice in the CFR benefits the public by updating citations.

I. Administrative Requirements

Under Executive Order 12866 (58 FR 51735, October 4, 1993), this action is not a ''significant regulatory action'' and therefore is not subject to review by the

Office of Management and Budget. For this reason, this action is also not subject to Executive Order 13211, ''Actions Concerning Regulations That Significantly Affect Energy Supply, Distribution, or Use'' (66 FR 28355, May 22, 2001). This action merely approves state law as meeting Federal requirements and imposes no additional requirements beyond those imposed by state law. Accordingly, the Administrator certifies that this rule will not have a significant economic impact on a substantial number of small entities under the Regulatory Flexibility Act (5 U.S.C. 601 et seq.). Because this rule approves pre-existing requirements under state law and does not impose any additional enforceable duty beyond that required by state law, it does not contain any unfunded mandate or significantly or uniquely affect small governments, as described in the Unfunded Mandates Reform Act of 1995 (Public Law 104–4).

This rule also does not have tribal implications because it will not have a substantial direct effect on one or more Indian tribes, on the relationship between the Federal Government and Indian tribes, or on the distribution of power and responsibilities between the Federal Government and Indian tribes, as specified by Executive Order 13175 (65 FR 67249, November 9, 2000). This action also does not have Federalism implications because it does not have substantial direct effects on the States, on the relationship between the national government and the States, or on the distribution of power and responsibilities among the various levels of government, as specified in Executive Order 13132 (64 FR 43255, August 10, 1999). This action merely approves a state rule implementing a Federal standard, and does not alter the relationship or the distribution of power and responsibilities established in the Clean Air Act. This rule also is not subject to Executive Order 13045 ''Protection of Children from Environmental Health Risks and Safety Risks'' (62 FR 19885, April 23, 1997), because it is not economically significant.

In reviewing SIP submissions, EPA's role is to approve state choices, provided that they meet the criteria of the Clean Air Act. In this context, in the absence of a prior existing requirement for the State to use voluntary consensus standards (VCS), EPA has no authority to disapprove a SIP submission for failure to use VCS. It would thus be inconsistent with applicable law for EPA, when it reviews a SIP submission, to use VCS in place of a SIP submission that otherwise satisfies the provisions of the Clean Air Act. Thus, the requirements of section 12(d) of the National Technology Transfer and Advancement Act of 1995 (15 U.S.C. 272 note) do not apply. This rule does not impose an information collection burden under the provisions of the Paperwork Reduction Act of 1995 (44 U.S.C. 3501 et seq.).

The Congressional Review Act, 5 U.S.C. 801 et seq., as added by the Small Business Regulatory Enforcement Fairness Act of 1996, generally provides that before a rule may take effect, the agency promulgating the rule must submit a rule report, which includes a copy of the rule, to each House of the Congress and to the Comptroller General of the United States. EPA will submit a report containing this rule and other required information to the U.S. Senate, the U.S. House of Representatives, and the Comptroller General of the United States prior to publication of the rule in the **Federal Register**. A major rule cannot take effect until 60 days after it is published in the **Federal Register**. This action is not a ''major rule'' as defined by 5 U.S.C. 804(2).

Under section 307(b)(1) of the Clean Air Act, petitions for judicial review of this action must be filed in the United States Court of Appeals for the appropriate circuit by April 1, 2002. Filing a petition for reconsideration by the Administrator of this final rule does not affect the finality of this rule for the purposes of judicial review nor does it extend the time within which a petition for judicial review may be filed, and shall not postpone the effectiveness of such rule or action. This action may not be challenged later in proceedings to enforce its requirements. (See section 307(b)(2).)

List of Subjects in 40 CFR Part 52

Environmental protection, Air pollution control, Carbon monoxide, Hydrocarbons, Incorporation by reference, Intergovernmental relations, Lead, Nitrogen dioxide, Ozone, Particulate matter, Reporting and recordkeeping requirements, Sulfur oxides.

Dated: January 11, 2002.

A. Stanley Meiburg,

Acting Regional Administrator, Region 4.

Chapter I, title 40, Code of Federal Regulations, is amended as follows:

PART 52—[AMENDED]

1. The authority for citation for part 52 continues to read as follows:

Authority: 42 U.S.C. 7401 et seq.

Subpart B—Alabama

2. Section 52.50 is amended by revising paragraph (b) to read as follows:

§ 52.50 Identification of plan.

* * * * *

(b) Incorporation by reference.

(1) Material listed in paragraphs (c) and (d) of this section with an EPA approval date prior to January 1, 2002, was approved for incorporation by reference by the Director of the Federal Register in accordance with 5 U.S.C. 552(a) and 1 CFR part 51. Material is incorporated as it exists on the date of the approval, and notice of any change in the material will be published in the **Federal Register**. Entries in paragraphs (c) and (d) of this section with EPA approval dates on or after January 1, 2002, will be incorporated by reference in the next update to the SIP compilation.

(2) EPA Region 4 certifies that the rules/regulations provided by EPA in the SIP compilation at the addresses in paragraph (b)(3) of this section are an exact duplicate of the officially promulgated State rules/regulations which have been approved as part of the State implementation plan as of January 1, 2002.

(3) Copies of the materials incorporated by reference may be inspected at the Region 4 EPA Office at 61 Forsyth Street, SW., Atlanta, GA 30303; the Office of the Federal Register, 800 North Capitol Street, NW., Suite 700, Washington, DC.; or at the EPA, Air and Radiation Docket and Information Center, Air Docket (Mail Code 6102), 401 M Street., SW., Washington, DC. 20460.

* * * * *

[FR Doc. 02–2381 Filed 1–30–02; 8:45 am]

BILLING CODE 6560–50–P

ENVIRONMENTAL PROTECTION AGENCY

40 CFR Part 52

[OH 103–1a; FRL–7114–1]

Approval and Promulgation of Implementation Plans; Ohio

AGENCY: Environmental Protection Agency (EPA).

ACTION: Direct final rule.

SUMMARY: On March 20, 2000, Ohio submitted certain revisions to the State Implementation Plan (SIP) for sulfur dioxide (SO_2) for several Ohio counties. Today, EPA is rulemaking on portions of this submittal which were not addressed in a June 5, 2000, rulemaking

(see 65 FR 35577). In today's action, EPA is approving revised emission limits for sources in Butler, Pickaway, and Lake Counties. In addition, EPA is approving selected parts of the State's rules for compliance schedules and test methods. In conjunction with these actions, EPA is rescinding federally promulgated SO_2 emission limits for Butler, Lorain, Coshocton, Gallia, and Lake Counties, since these limitations have been superseded by approved State limits.

DATES: This ''direct final'' rule is effective on April 1, 2002, unless EPA receives adverse written comments by March 4, 2002. If EPA receives adverse written comments, EPA will publish a timely withdrawal of the rule in the **Federal Register** and will inform the public that the rule will not take effect.

ADDRESSES: You may send written comments to: J. Elmer Bortzer, Chief, Regulation Development Section, Air Programs Branch (AR–18J), Environmental Protection Agency, 77 West Jackson Boulevard, Chicago, Illinois 60604.

Copies of the revision request are available for inspection at the following address: Environmental Protection Agency, Region 5, Air and Radiation Division, 77 West Jackson Boulevard, Chicago, Illinois 60604. (We recommend that you telephone Phuong Nguyen, Environmental Scientist, at (312) 886–6701 before visiting the Region 5 office.)

FOR FURTHER INFORMATION CONTACT: Phuong Nguyen at (312) 886–6701.

SUPPLEMENTARY INFORMATION: Throughout this document wherever ''we'' ''us'' or ''our'' are used we mean EPA. This supplemental information section is organized as follows:

I. What rules are EPA addressing today?
II. Summary and analysis of the state rules.
  1. Butler County (OAC 3745–18–15)
  2. Pickaway County (OAC 3745–18–71)
  3. Lake County (OAC 3745–18–49)
  4. Compliance Time Schedules (OAC 3745–18–03)
  5. Measurement Methods and Procedures (OAC 3745–18–04)
III. Federal Implementation Plan (FIP) replacement.
IV. What action is EPA taking?
  1. Action on State rules.
  2. Action on Federal Implementation Plan (FIP).
V. Administrative requirements.

I. What Rules Are EPA Addressing Today?

On March 20, 2000, Ohio submitted several revised SO_2 rules to EPA. EPA approved the Coshocton, Gallia, and Lorain county portions of this submittal on June 5, 2000 (65 FR 35577). Today EPA is taking action on the remaining elements of the March 20, 2000 submittal. The rules that EPA is addressing are listed in the following table.

TABLE 1.—RULES BEING ADDRESSED IN THIS ACTION

State rule	Rule subject
OAC 3745–18–15	Butler County.
OAC 3745–18–71	Pickaway County.
OAC 3745–18–49	Lake County.
OAC 3745–18–03	Compliance Time Schedules.
OAC 3745–18–04	Measurement Methods and Procedures.
40 CFR 52.1881(b) ...	Removal of Superseded Parts of the FIP.

EPA has prepared a technical support document (TSD) dated September 5, 2001 discussing these rules, providing the history of related rulemaking and a more detailed analysis of the State's submittal.

II. Summary and Analysis of the State Rules

1. Butler County (OAC 3745–18–15)

The TSD describes the history of SO_2 limitations in Butler County. This history includes federal promulgation of limits and the rescission of most of these limits, as well as a State submittal of comparable rules that EPA disapproved. The recent State submittal is intended to fill the gap in federally enforceable rules. The TSD also describes modeling conducted by Ohio EPA to assess the impact of the Butler county revisions.

EPA analyzed the State's submittal by comparing it with existing federally enforceable limits. Due to historical rule rescissions, existing federally enforceable limits still apply to only a few relatively insignificant sources in the County. By contrast, Ohio's new limits establish source-specific limits for the full range of significant sources in the County. For some sources, the new limits are slightly less stringent. However, these sources are relatively insignificant in comparison to the sources that now have limits and were previously unregulated. EPA expects the tightening effect of establishing limits on the most significant sources will far outweigh the slight relaxation in limits for some sources, particularly in the areas most likely to observe exceedances of the National Ambient Air Quality Standards (NAAQS) but also in most, if not all, of the rest of the County. Consequently, EPA is approving the full set of rules Ohio submitted for Butler County on the basis of their effect of strengthening the SIP's protection against NAAQS violations.

2. Pickaway County (OAC 3745–18–71)

The TSD explains the history of SO_2 modeling conducted to assess the impact in Pickaway County of new sources in southern Franklin County. As a result of the modeling, Ohio adopted a lower emission limit for boilers at the Picway Generating Plant. Ohio changed the allowable emission limit for the Columbus Southern Power Company, Picway Generating Plant boiler numbers 7, 8, and 9 from 9.9 to 5.6 pounds of the sulfur dioxide per Million British Thermal Unit (MM BTU) actual heat input for each boiler. EPA reviewed the modeling and concurred that an emission limit of 5.6 pounds of sulfur dioxide per MM BTU is adequate to meet the NAAQS. EPA, therefore, approves this rule revision.

3. Lake County (OAC 3745–18–49)

The TSD describes the history of SO_2 emission limits in Lake County. This history includes the approval of State-adopted limits which were covered in the March 17, 1999 rulemaking (64 FR 13071). The TSD also discusses the lawsuit involved with the Painesville Municipal Plant. This lawsuit concluded with a consent decree which required Painesville to physically modify the unit to derate its capacity to below the new source performance standards (NSPS) threshold (250 MMBTU per hour). The consent decree also established an interim limit of 4.7 pounds per MM BTU and called for establishment of a final limit pursuant to modeling.

EPA has previously approved modeling for this area of Lake County. The modeling showed attainment based, in part, on a limit of 5.7 pounds per MM BTU for all units at the Painesville Municipal Plant. EPA previously approved application of this limit to other boilers at the Painesville Municipal Plant besides boiler number 5. EPA is relying on that same modeling as a basis for approving the same limit for boiler number 5.

4. Compliance Time Schedules (OAC 3745–18–03)

Rule OAC 3745–18–03 addresses the compliance time and schedules for sources in the entire State of Ohio. The TSD explains in detail why EPA did not rulemake on the entire 1979 version of this rule in January 27, 1981 (46 FR 8482).

In today's action, EPA is approving the overall compliance deadline for Butler County (OAC 3745–18–03(A)(2)(d)) as well as certification and permit application requirements for sources in Butler County (OAC 3745–18–03(B)(8)). EPA is also approving the compliance time schedules for sources in both Butler County (3745–18–03(C)(6)), and Pickaway County (3745–18–03(C)(10)).

In a previous rulemaking approving the Lorain County limits, EPA inadvertently failed to approve the associated compliance provisions, in particular, the certification and permit application requirements for U.S. Steel Corporation in Lorain County (OAC 3745–18–03(B)(4)). EPA is approving these provisions today.

5. Measurement Methods and Procedures (OAC 3745–18–04)

Rule OAC 3745–18–04 addresses the measurement methods and procedures for sources in the entire State of Ohio. The TSD describes the history and provides a more detailed review of these rule revisions.

In today's action, EPA approves the test methods and procedures for sources in Butler County (OAC 3745–18–04(D)(9)). The rule allows sources which are burning coal in Butler County to be able to use stack tests, continuous emission monitoring, or coal sampling and analysis as the methods for determining compliance with the applicable SO_2 emission limits. EPA also approves paragraph OAC 3745–18–04(E)(7) which specifies the test methods and procedures for determining compliance with the applicable SO_2 limits for any boiler burning fuel other than coal in Butler County.

In addition, Ohio changed paragraphs (D)(7), (D)(8), and (G) for sources in Hamilton County, which EPA had approved in 1994 (59 FR 43287). The revised rule OAC 3745–18–04 changes a conversion factor in the emission rate calculation for solid fuel in Hamilton County from 1.95 to 1.9. Hamilton County sources would now apply the same conversion factor as other sources in the State. EPA believes this is an appropriate revision to the SIP.

Finally, EPA is approving an amendment in OAC 3745–18–04(F)(4). The amendment increases the cut point from 0.5 to 0.6 pounds of SO_2 per million standard cubic feet in natural gas that has a heat content greater than 950 BTU per standard cubic feet. EPA believes that such an emissions increase is insignificant; therefore, we approve this revision.

III. FIP Replacement

Several of the FIP limits that EPA promulgated in 1976 have become superseded by approval of corresponding state rules. EPA approved State adopted emission limits for Lorain, Coshocton, and Gallia on June 5, 2000 (65 FR 35577), and for Lake County on March 30, 1998 (63 FR 15091). In this action, EPA is approving the emission limits for Butler County. These state-adopted emission limits supersede the FIP limits. Therefore, EPA rescinds the federal promulgated emission limitations for SO_2 for Butler, Lorain, Coshocton, Gallia, and Lake Counties since the FIP limits are no longer needed.

IV. What Action Is EPA Taking?

A. Action on State Rules

In this action, EPA is approving the emission limits for specific sources in Butler (OAC 3745–18–15), Pickaway (OAC 3745–18–71), and Lake (OAC 3745–1849) Counties. In addition, EPA is approving the overall compliance deadlines, certification and permit application, and compliance time schedule for Butler (OAC 3745–18–03(A)(2)(d), OAC 3745–18–03(B)(8), and OAC 3745–18–03 (C)(6)), Pickaway Counties (OAC 3745–18–03(C)(10)).

EPA is also approving the certification and permit application for U.S. Steel Corporation in Lorain County (OAC 3745–18–03(B)(4)).

Finally, EPA is approving the test methods and procedures for sources in Butler County (OAC 3745–18–04 (D)(9), OAC 3745–18–04(D)(8), OAC 3745–18–04(E)(7)). EPA is also approving a change in the sulfur to sulfur-dioxide conversion factor used in Hamilton County (OAC 3745–18–04–(F)(1)), as well as a change in the sulfur content used to define a de minimis exemption for natural gas (OAC 3745–18–04(F)(4)).

B. Action on FIP

EPA is rescinding the federal promulgated emission limits for SO_2 sources in Butler, Lorain, Coshocton, Gallia, and Lake Counties codified at 40 CFR 52.1881(b)(12),(14),(17),(18), and (20), respectively.

V. Administrative Requirements

A. Executive Order 12866

The Office of Management and Budget (OMB) has exempted this regulatory action from Executive Order 12866, entitled ''Regulatory Planning and Review.''

B. Executive Order 13045

Protection of Children from Environmental Health Risks and Safety Risks (62 FR 19885, April 23, 1997), applies to any rule that: (1) Is determined to be ''economically significant'' as defined under Executive Order 12866, and (2) concerns an environmental health or safety risk that EPA has reason to believe may have a disproportionate effect on children. If the regulatory action meets both criteria, the Agency must evaluate the environmental health or safety effects of the planned rule on children, and explain why the planned regulation is preferable to other potentially effective and reasonably feasible alternatives considered by the Agency.

This rule is not subject to Executive Order 13045 because it does not involve decisions intended to mitigate environmental health or safety risks.

C. Executive Order 13132

Federalism (64 FR 43255, August 10, 1999) revokes and replaces Executive Orders 12612 (Federalism) and 12875 (Enhancing the Intergovernmental Partnership). Executive Order 13132 requires EPA to develop an accountable process to ensure ''meaningful and timely input by State and local officials in the development of regulatory policies that have federalism implications.'' ''Policies that have federalism implications'' is defined in the Executive Order to include regulations that have ''substantial direct effects on the States, on the relationship between the national government and the States, or on the distribution of power and responsibilities among the various levels of government.'' Under Executive Order 13132, EPA may not issue a regulation that has federalism implications, that imposes substantial direct compliance costs, and that is not required by statute, unless the Federal government provides the funds necessary to pay the direct compliance costs incurred by State and local governments, or EPA consults with State and local officials early in the process of developing the proposed regulation. EPA also may not issue a regulation that has federalism implications and that preempts State law unless the Agency consults with State and local officials early in the process of developing the proposed regulation.

This rule will not have substantial direct effects on the States, on the relationship between the national government and the States, or on the distribution of power and responsibilities among the various levels of government, as specified in Executive Order 13132, because it merely approves a state rule implementing a federal standard, and

does not alter the relationship or the distribution of power and responsibilities established in the Clean Air Act. Thus, the requirements of section 6 of the Executive Order do not apply to this rule.

D. Executive Order 13175

This final rule does not have tribal implications. It will not have substantial direct effects on tribal governments, on the relationship between the Federal government and Indian tribes, or on the distribution of power and responsibilities between the Federal government and Indian tribes, as specified in Executive Order 13175. Thus, Executive Order 13175 does not apply to this rule.

E. Executive Order 13211

This rule is not subject to Executive Order 13211, ''Actions Concerning Regulations That Significantly Affect Energy Supply, Distribution, or use'' (66 FR 28355, May 22, 2001) because it is not a significant regulation action under Executive Order 12866.

F. Regulatory Flexibility

The Regulatory Flexibility Act (RFA) generally requires an agency to conduct a regulatory flexibility analysis of any rule subject to notice and comment rulemaking requirements unless the agency certifies that the rule will not have a significant economic impact on a substantial number of small entities. Small entities include small businesses, small not-for-profit enterprises, and small governmental jurisdictions.

This rule will not have a significant impact on a substantial number of small entities because SIP approvals under section 110 and subchapter I, part D of the Clean Air Act do not create any new requirements but simply approve requirements that the State is already imposing. Therefore, because the Federal SIP approval does not create any new requirements, I certify that this action will not have a significant economic impact on a substantial number of small entities. Moreover, due to the nature of the Federal-State relationship under the Clean Air Act, preparation of flexibility analysis would constitute Federal inquiry into the economic reasonableness of state action. The Clean Air Act forbids EPA to base its actions concerning SIPs on such grounds. *Union Electric Co.,* v. *U.S. EPA,* 427 U.S. 246, 255–66 (1976); 42 U.S.C. 7410(a)(2).

G. Unfunded Mandates

Under sections 202 of the Unfunded Mandates Reform Act of 1995 (''Unfunded Mandates Act''), signed into law on March 22, 1995, EPA must prepare a budgetary impact statement to accompany any proposed or final rule that includes a Federal mandate that may result in estimated costs to State, local, or tribal governments in the aggregate; or to the private sector, of $100 million or more. Under section 205, EPA must select the most cost-effective and least burdensome alternative that achieves the objectives of the rule and is consistent with statutory requirements. Section 203 requires EPA to establish a plan for informing and advising any small governments that may be significantly or uniquely impacted by the rule.

EPA has determined that the approval action promulgated does not include a Federal mandate that may result in estimated costs of $100 million or more to either State, local, or tribal governments in the aggregate, or to the private sector. This Federal action approves pre-existing requirements under State or local law, and imposes no new requirements. Accordingly, no additional costs to State, local, or tribal governments, or to the private sector, result from this action.

H. Submission to Congress and the Comptroller General

The Congressional Review Act, 5 U.S.C. 801 *et seq.*, as added by the Small Business Regulatory Enforcement Fairness Act of 1996, generally provides that before a rule may take effect, the agency promulgating the rule must submit a rule report, which includes a copy of the rule, to each House of the Congress and to the Comptroller General of the United States. EPA will submit a report containing this rule and other required information to the U.S. Senate, the U.S. House of Representatives, and the Comptroller General of the United States prior to publication of the rule in the **Federal Register**. A major rule cannot take effect until 60 days after it is published in the **Federal Register**. This action is not a ''major rule'' as defined by 5 U.S.C. 804(2). This rule will be effective April 1, 2002, unless EPA receives adverse written comments by March 4, 2002.

I. National Technology Transfer and Advancement Act

Section 12 of the National Technology Transfer and Advancement Act (NTTAA) of 1995 requires Federal agencies to evaluate existing technical standards when developing a new regulation. To comply with NTTAA, EPA must consider and use ''voluntary consensus standards'' (VCS) if available and applicable when developing programs and policies unless doing so would be inconsistent with applicable law or otherwise impractical.

The EPA believes that VCS are inapplicable to this action. Today's action does not require the public to perform activities conducive to the use of VCS.

J. Petitions for Judicial Review

Under section 307(b)(1) of the Clean Air Act, petitions for judicial review of this action must be filed in the United States Court of Appeals for the appropriate circuit by April 1, 2002. Filing a petition for reconsideration by the Administrator of this final rule does not affect the finality of this rule for the purposes of judicial review nor does it extend the time within which a petition for judicial review may be filed, and shall not postpone the effectiveness of such rule or action. This action may not be challenged later in proceedings to enforce its requirements. (See section 307(b)(2).)

List of Subjects in 40 CFR Part 52

Environmental protection, Air pollution control, Incorporation by reference, Intergovernmental relations, Reporting and recordkeeping, Sulfur dioxide.

Dated: November 29, 2001.

Christine Todd Whitman,

Administrator.

For the reasons stated in the preamble, part 52, chapter I, title 40 of the Code of Federal Regulations are amended as follows:

PART 52—[AMENDED]

1. The authority citation for part 52 continues to read as follows:

Authority: 42 U.S.C. 7401 *et seq.*

Subpart KK—Ohio

2. Section 52.1870 is amended by adding paragraph (c)(125) to read as follows:

§ 52.1870 Identification of plan.

* * * * *

(c)* * *

(125) On March 20, 2000, the Ohio Environmental Protection Agency submitted revised rules to control sulfur dioxide emissions in Butler and Pickaway Counties, and a revision to compliance time schedules as well as measurement methods and procedures for SO_2 sources for the State of Ohio. Ohio has rescinded OAC 3745–18–04 (G), which had special emission calculation procedures for Hamilton County.

(i) Incorporation by reference.

(A) Rules OAC 3745–18–03(A)(2)(d); OAC 3745–18–03(B)(4); OAC 3745–18–03(B)(8); OAC 3745–18–03(C)(6); OAC 3745–18–03(C)(10); 3745–18–04(D)(8); 3745–18–04(D)(9); OAC 3745–18–04(E)(7); OAC 3745–18–04(F); OAC 3745–18–15; OAC 3745–18–71. Adopted March 1, 2000, effective March 21, 2000.

(B) Rule OAC 3745–18–49(F), effective May 11, 1987.

* * * * *

3. Section 52.1881 is amended by revising paragraphs (a)(4), (a)(8), and removing and reserving paragraphs (b)(12), (b)(14), (b)(17), (b)18), and (b)(20) to read as follows:

§ 52.1881 Control strategy: Sulfur oxides (sulfur dioxide).

(a) * * *

(4) Approval—EPA approves the sulfur dioxide emission limits for the following counties: Adams County (except Dayton Power & Light-Stuart), Allen County (except Cairo Chemical), Ashland County, Ashtabula County, Athens County, Auglaize County, Belmont County, Brown County, Butler County, Carroll County, Champaign County, Clark County, Clermont County, (except Cincinnati Gas & Electric-Beckjord), Clinton County, Columbiana County, Coshocton County, Crawford County, Darke County, Defiance County, Delaware County, Erie County, Fairfield County, Fayette County, Fulton County, Gallia County, Geauga County, Greene County, Guernsey County, Hamilton County, Hancock County, Hardin County, Harrison County, Henry County, Highland County, Hocking County, Holmes County, Huron County, Jackson County, Jefferson County, Knox County, Lake County, Lawrence County (except Allied Chemical-South Point), Licking County, Logan County, Lorain County, Lucas County (except Gulf Oil Company, Coulton Chemical Company, and Phillips Chemical Company), Madison County, Marion County, Medina County, Meigs County, Mercer County, Miami County, Monroe County, Montgomery County (except Bergstrom Paper, Miami Paper), Morgan County, Morrow County, Muskingum County, Noble County, Ottawa County, Paulding County, Perry County, Pickaway County, Pike County (except Portsmouth Gaseous Diffusion Plant), Portage County, Preble County, Putnam County, Richland County, Ross County (except Mead Corporation), Sandusky County (except Martin Marietta Chemicals), Scioto County, Seneca County, Shelby County, Trumbull County, Tuscarawas County, Union County, Van Wert County, Vinton County, Warren County, Washington County (except Shell Chemical), Wayne County, Williams County, Wood County (except Libbey-Owens-Ford Plants Nos. 4 and 8 and No. 6), and Wyandot County.

* * * * *

(8) No Action—EPA is neither approving nor disapproving the emission limitations for the following counties/sources pending further review: Adams County (Dayton Power & Light-Stuart), Allen County (Cairo Chemical), Clermont County (Cincinnati Gas & Electric-Beckjord), Cuyahoga County, Franklin County, Lawrence County (Allied Chemical-South Point), Lucas County (Gulf Oil Company, Coulton Chemical Company, and Phillips Chemical Company), Mahoning County, Montgomery County (Bergstrom Paper and Miami Paper), Pike County (Portsmouth Gaseous Diffusion Plant), Ross County (Mead corporation), Sandusky County (Martin Marietta Chemicals), Stark County, Washington County (Shell Chemical Company), and Wood County (Libbey-Owens-Ford Plants Nos. 4 and 8 and No. 6).

* * * * *

[FR Doc. 02–2379 Filed 1–30–02; 8:45 am]

BILLING CODE 6560–50–P

ENVIRONMENTAL PROTECTION AGENCY

40 CFR Part 70

[DC–T5–2001a; FRL–7136–3]

Clean Air Act Full Approval of Operating Permit Program; District of Columbia; Correction

AGENCY: Environmental Protection Agency (EPA).

ACTION: Direct final rule; correcting amendment.

SUMMARY: This document corrects an error in the preamble language of a final rule pertaining to the full approval of the District of Columbia's title V operating permit program. EPA is hereby correcting a statement in the preamble to the final rule concerning its proposed interpretation of the term ''modifications'' under Title I of the Clean Air Act.

EFFECTIVE DATE: This correction is effective January 31, 2002.

FOR FURTHER INFORMATION CONTACT: Paresh R. Pandya, U.S. Environmental Protection Agency, Region III (3AP11), 1650 Arch Street, Philadelphia, PA 19103 at (215) 814–2167 or by e-mail at pandya.perry@epamail.epa.gov.

SUPPLEMENTARY INFORMATION: Effective November 30, 2001, EPA promulgated a final rule granting full approval to the District of Columbia's title V operating permit program submitted to EPA under the Clean Air Act Amendments of 1990 and implementing regulations at 40 CFR part 70. The final rule was published in the **Federal Register** on December 4, 2001 (66 FR 62954), and the proposed rule was published in the **Federal Register** on October 16, 2001 (66 FR 52561). EPA is hereby correcting a statement in the preamble to the final rule concerning EPA's most recent proposed interpretation of the term modifications under Title I of the Clean Air Act. The correction merely provides an accurate reference to EPA's most recent proposed interpretation of the term and neither the correction nor the initial statement is intended to have any effect on the Agency's final position on the December 4, 2001 rulemaking action.

In the preamble to the final rule, EPA responded to an adverse comment on the Proposed Rule which asserted that EPA could not grant the District's title V operating permit program full approval because the program excludes changes reviewed under minor new source review from the definition of Title I modifications. EPA included the following statement in the response: ''Although EPA believes that the better interpretation of 'Title I modifications'' is to include changes reviewed under a minor source preconstruction review program, EPA does not believe it is appropriate to require the District to change the definition until EPA completes its rulemaking on this provision.'' The ''interpretation of 'Title I modifications' '' referred to in this statement is the one included in EPA's proposed interim approval of the District's title V operating permit program, which was published in the **Federal Register** on March 21, 1995 (60 FR 14921, 14922). The March 21, 1995 notice in turn reflected the proposed interpretation of ''Title I modification'' contained in EPA's proposed revisions to 40 CFR part 70 that were published in the **Federal Register** on August 29, 1994 (59 FR 44460, 44463). However, EPA revised its proposed interpretation of ''Title I modifications'' in the preamble to proposed revisions to 40 CFR parts 70 and 71 that were published in the **Federal Register** on August 31, 1995 to exclude modifications under the minor new source review program in section 110(a)(2)(C) of the Clean Air Act. *See* 60 FR 45530, 45545–45546 (explaining the rationale for the revised proposed interpretation). The December 4, 2001 response to the adverse comment on

''Title I modifications'' therefore did not accurately reflect EPA's current proposed interpretation of this term. Thus, the first part of the statement quoted above should not have been included. This action corrects the erroneous language in the preamble.

Correction

In rule document No. 01–29967, beginning on page 62954, in the issue of December 4, 2001, make the following correction:

On page 62956, third column, remove the last paragraph beginning with ''*Response:*'' and on page 62957, first column, remove the first two paragraphs, and replace them with the following text:

''*Response:* EPA, in its proposed interim approval, indicated that a revision of the 20 DCMR 399.1 Definition of Title I Modification or modification under any provision of Title I of the Act to include changes reviewed under minor new source review would be required only if EPA established such a definition through rulemaking. Because EPA has not issued any final rule specifying that the definition of a 'Title I modification' must include changes subject to minor new source review, the District's current regulations remain consistent with 40 CFR part 70. EPA does not believe it is appropriate to require the District to revise the definition until such time as EPA completes its rulemaking on this provision in a manner that requires a revision in the District's rules.

Should EPA revise this definition in the future, the District will be required to revise its regulations as appropriate. As stated in EPA's proposed interim approval published on March 21, 1995 (60 FR 14921, 14922), EPA did not identify the District's definition of 'Title I modification or modification under any provision of Title I of the Act' as necessary grounds for either interim approval or disapproval. Accordingly, EPA has not identified the District's definition of this term to be a program deficiency.''

Section 553 of the Administrative Procedure Act, 5 U.S.C. 553(b)(B), provides that, when an agency for good cause finds that notice and public procedure are impracticable, unnecessary or contrary to the public interest, the agency may issue a rule without providing notice and an opportunity for public comment. We have determined that there is good cause for making today's rule final without prior proposal and opportunity for comment because we are merely correcting an incorrect citation in a previous action. Thus, notice and public procedure are unnecessary. We find that this constitutes good cause under 5 U.S.C. 553(b)(B).

Administrative Requirements

Under Executive Order (E.O.) 12866 (58 FR 51735, October 4, 1993), this action is not a ''significant regulatory action'' and is therefore not subject to review by the Office of Management and Budget. For this reason, this action is also not subject to Executive Order 13211, ''Actions Concerning Regulations That Significantly Affect Energy Supply, Distribution, or Use'' (66 FR 28355 (May 22, 2001)). Because the agency has made a ''good cause'' finding that this action is not subject to notice-and-comment requirements under the Administrative Procedures Act or any other statute as indicated in the Supplementary Information section above, it is not subject to the regulatory flexibility provisions of the Regulatory Flexibility Act (5 U.S.C. 601 *et seq.*), or to sections 202 and 205 of the Unfunded Mandates Reform Act of 1995 (UMRA) (Pub. L. 104–4). In addition, this action does not significantly or uniquely affect small governments or impose a significant intergovernmental mandate, as described in sections 203 and 204 of UMRA. This rule also does not have a substantial direct effect on one or more Indian tribes, on the relationship between the Federal Government and Indian tribes, or on the distribution of power and responsibilities between the Federal Government and Indian tribes, as specified by Executive Order 13175 (65 FR 67249, November 9, 2000), nor will it have substantial direct effects on the States, on the relationship between the national government and the States, or on the distribution of power and responsibilities among the various levels of governments, as specified by Executive Order 13132 (64 FR 43255, August 10, 1999). This rule also is not subject to Executive Order 13045 (62 FR 19885, April 23, 1997), because it is not economically significant.

This technical correction action does not involve technical standards; thus the requirements of section 12(d) of the National Technology Transfer and Advancement Act of 1995 (15 U.S.C. 272 note) do not apply. The rule also does not involve special consideration of environmental justice related issues as required by Executive Order 12898 (59 FR 7629, February 16, 1994). In issuing this rule, EPA has taken the necessary steps to eliminate drafting errors and ambiguity, minimize potential litigation, and provide a clear legal standard for affected conduct, as required by section 3 of Executive Order 12988 (61 FR 4729, February 7, 1996). EPA has complied with Executive Order 12630 (53 FR 8859, March 15, 1998) by examining the takings implications of the rule in accordance with the ''Attorney General's Supplemental Guidelines for the Evaluation of Risk and Avoidance of Unanticipated Takings'' issued under the executive order. This rule does not impose an information collection burden under the Paperwork Reduction Act of 1995 (44 U.S.C. 3501 *et seq*).

The Congressional Review Act (5 U.S.C. 801 *et seq.*), as added by the Small Business Regulatory Enforcement Fairness Act of 1996, generally provides that before a rule may take effect, the agency promulgating the rule must submit a rule report, which includes a copy of the rule, to each House of the Congress and to the Comptroller General of the United States. Section 808 allows the issuing agency to make a rule effective sooner than otherwise provided by the CRA if the agency makes a good cause finding that notice and public procedure is impracticable, unnecessary or contrary to the public interest. This determination must be supported by a brief statement. 5 U.S.C. 808(2). As stated previously, EPA had made such a good cause finding, including the reasons therefore, and established an effective date of November 30, 2001. EPA will submit a report containing this rule and other required information to the U.S. Senate, the U.S. House of Representatives, and the Comptroller General of the United States prior to publication of the rule in the **Federal Register**. This correction to Rule Document No. 01–29967 for the District of Columbia is not a ''major rule'' as defined by 5 U.S.C. 804(2).

Dated: January 24, 2002.

Thomas C. Voltaggio,

Acting Regional Administrator, EPA Region III.

[FR Doc. 02–2377 Filed 1–30–02; 8:45 am]

BILLING CODE 6560–50–P

ENVIRONMENTAL PROTECTION AGENCY

40 CFR Part 80

Regulation of Fuels and Fuel Additives

CFR Correction

In Title 40 of the Code of Federal Regulations, Parts 72 to 80, revised as of July 1, 2001, on page 705, § 80.101 is corrected by removing the second paragraph (f)(4).

[FR Doc. 02–55501 Filed 1–30–02; 8:45 am]

BILLING CODE 1505–01–D

ENVIRONMENTAL PROTECTION AGENCY

40 CFR Part 122

EPA Administered Permit Programs: The National Pollutant Discharge Elimination System

CFR Correction

In Title 40 of the Code of Federal Regulations, Parts 100 to 135, revised as of July 1, 2001, § 122.26 is corrected by revising paragraph (c)(1)(i)(E)(*4*) and removing and reserving paragraph (c)(2) to read as follows:

§ 122.26 Storm water discharges (applicable to State NPDES programs, see § 123.25).

* * * * *

(c) * * *

(1) * * *

(i) * * *

(E) * * *

(*4*) Any information on the discharge required under § 122.21(g)(7) (vi) and (vii);

* * * * *

(2) [Reserved]

* * * * *

[FR Doc. 02–55502 Filed 1–30–02; 8:45 am]

BILLING CODE 1505–01–D

FEDERAL COMMUNICATIONS COMMISSION

47 CFR Part 0

Commission Organization

CFR Correction

In Title 47 of the Code of Federal Regulations, parts 0 to 19, revised as of October 1, 2001, on page 20, the second § 0.111 is removed.

[FR Doc. 02–55504 Filed 1–30–02; 8:45 am]

BILLING CODE 1505–01–D

FEDERAL COMMUNICATIONS COMMISSION

47 CFR Parts 20 and 22

[WT Docket No. 01–14; FCC 01–328]

2000 Biennial Regulatory Review—Spectrum Aggregation Limits For Commercial Mobile Radio Services; Correction

AGENCY: Federal Communications Commission.

ACTION: Final rule; correction.

SUMMARY: The Federal Communications Commission published in the **Federal Register** of January 14, 2002, a document concerning the 2000 biennial review of the Commercial Mobile Radio Service (CMRS) spectrum aggregation limit, or ''spectrum cap,'' and cellular cross-interest rules. Inadvertently amendatory instruction no. 2 to 47 CFR 22.942 contained an error. This document corrects that instruction.

DATES: Effective February 13, 2002.

FOR FURTHER INFORMATION CONTACT: Lauren Kravetz Patrich or John Branscome, Commercial Wireless Division, Wireless Telecommunications Bureau, at (202) 418–0620.

SUPPLEMENTARY INFORMATION: The Federal Communications Commission published a document in the **Federal Register** of January 14, 2002, (67 FR 1626). This correction revises amendatory instruction no. 2 to 47 CFR 22.942. In FR Doc. 02–868, published in the **Federal Register** of January 14, 2002 (67 FR 1626) make the following correction. On page 1642, in the third column, correct amendatory instruction no. 2 to read as follows:

§ 22.942 [Corrected]

2. Section 22.942 is amended by revising the section heading and paragraphs (a) and (c) to read as follows:

* * * * *

Dated: January 24, 2002.

Federal Communications Commission.

William F. Caton,

Deputy Secretary.

[FR Doc. 02–2363 Filed 1–30–02; 8:45 am]

BILLING CODE 6712–01–P

FEDERAL COMMUNICATIONS COMMISSION

47 CFR Part 87

[WT Docket No. 00–77; FCC 01–378]

Accommodation of Advanced Digital Communications in the 117.975–137 MHz Frequency Band and Implementation of Flight Information Services in the 136–137 MHz Frequency Band

AGENCY: Federal Communications Commission.

ACTION: Final rule.

SUMMARY: This document amends the Commission's rules to specify that very high frequency (VHF) aeronautical stations operating with phase modulation digital data emissions shall limit their power and out-of-band emissions in accord with recently modified international Standards and Recommended Practices (SARPs) adopted by the International Civil Aviation Organization (ICAO). The Commission has adopted these amendments in response to a petition for partial reconsideration of the *Report and Order* in this proceeding, filed by Aeronautical Radio, Inc. (ARINC). These rule amendments will serve the public interest because the revised standards have been accepted by the aviation community globally and will assist the aviation industry in implementing new data communications systems. In addition, by facilitating the deployment of advanced aviation communications technology, these amendments will serve the goals of aviation safety and efficiency that underlie this proceeding.

EFFECTIVE DATE: Effective March 4, 2002.

FOR FURTHER INFORMATION CONTACT: Jeffrey Tobias, Wireless Telecommunications Bureau at (202) 418–0680.

SUPPLEMENTARY INFORMATION: 1. This is a summary of the Commission's *Memorandum Opinion and Order,* FCC 01–378, adopted on December 21, 2001, and released on December 28, 2001. The full text of this *Memorandum Opinion and Order* is available for inspection and copying during normal business hours in the FCC Reference Center, Room CY–A257, 445 12th Street, SW., Washington, D.C. 20554. The complete text may be purchased from the Commission's copy contractor, Qualex International, Portals II, 445 12th Street, S.W., Room CY–B402, Washington, D.C. 20554.

Summary of Report and Order

2. Based on the record in this proceeding, we conclude that we should grant ARINC's petition for partial reconsideration because § 87.139(k) of the Commission's rules, 47 CFR 87.139(k), as adopted in the *Report and Order,* does not reflect recent changes in international standards pertaining to the emission mask and out-of-band power levels for VHF digital aviation communications systems. These modifications of the international SARPs, adopted by the ICAO after the period for submitting comments to the *Notice of Proposed Rulemaking* in this proceeding, 65 FR 41032, July 3, 2000, are to take effect on January 1, 2002. The ICAO has increased the amount of power permissible in the first adjacent channel by 2 dB, specifying that the total amount of power across the first adjacent channel shall not exceed 2 dBm, rather than the 0 dBm now specified in § 87.139(k)(1). The ICAO has also specified that the power measured over a 16 kHz bandwidth centered in either first adjacent 25 kHz channel shall be limited to −18 dBm,

instead of the −20 dBm limit set forth in § 87.139(k)(3). Finally, the ICAO has increased the amount of suppression required for out-of-band emissions in the second adjacent channels and beyond. The old standard required that the amount of power measured across either second adjacent channel be less than −25 dBm, and that the power measured in any other adjacent 25 kHz channels decrease monotonically by at least 5 dB per octave to a maximum value of −52 dBm. Under the new standard, the amount of power measured across either second adjacent 25 kHz channel must be less than −28 dBm, the amount of power measured across either fourth adjacent 25 kHz channel must be less than −38 dBm, and from thereon the power measured in any other adjacent 25 kHz channel must monotonically decrease at a rate of at least 5 dB per octave to a maximum value of −53 dBm.

3. It would serve the public interest to have these revised standards reflected in § 87.139(k) because they have been accepted by the aviation community globally and will assist the aviation industry in implementing new data communications systems. In addition, by facilitating the deployment of advanced aviation communications technology, this amendment will also serve the goals of effective aviation safety and efficiency that underlie this proceeding. Consistent with the ICAO rules scheduled to take effect on January 1, 2002, stations installed before January 1, 2002 that meet the existing out-of-band emission suppression standard in § 87.139(k)(2) but not the revised standard will be permitted to continue operating indefinitely.

Final Regulatory Flexibility Certification

4. The Regulatory Flexibility Act of 1980, as amended, (RFA) requires that a regulatory flexibility analysis be prepared for rulemaking proceedings, unless the agency certifies that ''the rule will not have a significant economic impact on a substantial number of small entities.'' The RFA generally defines ''small entity'' as having the same meaning as the terms ''small business,'' ''small organization,'' and ''small governmental jurisdiction.'' In addition, the term ''small business'' has the same meaning as the term ''small business concern'' under the Small Business Act. A small business concern is one which: (1) Is independently owned and operated; (2) is not dominant in its field of operation; and (3) satisfies any additional criteria established by the Small Business Administration (SBA).

5. In this *Memorandum Opinion and Order,* we make minor revisions to the out-of-band emission limits applicable to VHF aeronautical stations and aircraft stations operating with digital communications technology. These minor revisions conform our rules with international standards applicable to equipment and aircraft operating outside United States airspace, and have been adopted at the request of Aeronautical Radio, Inc., an organization representing the civil aviation industry, without objection from any party. These minor revisions do not impose any new reporting or compliance requirements on any entity, do not otherwise impose any additional burdens on any small entities, and do not require alteration of the Final Regulatory Flexibility Analysis for the *Report and Order.* We therefore certify that the adoption of this *Memorandum Opinion and Order* will not have a significant economic impact on a substantial number of small entities.

Report to Congress: The Commission will send a copy of this *Memorandum Opinion and Order,* including a copy of this Final Regulatory Flexibility Certification, in a report to be sent to Congress pursuant to the Small Business Regulatory Enforcement Fairness Act of 1996, see 5 U.S.C. 801(a)(1)(A). In addition, the Commission will send a copy of this *Memorandum Opinion and Order,* including a copy of this Final Regulatory Flexibility Certification, to the Chief Counsel for Advocacy of the Small Business Administration. A copy of the *Report and Order* and Final Regulatory Flexibility Certification (or summaries thereof) will also be published in the **Federal Register**. *See* 5 U.S.C. 604(b).

Ordering Clauses

6. Authority for issuance of this *Memorandum Opinion and Order* is contained in sections 1, 4(i), 302, 303(f) and (r), and 332 of the Communications Act of 1934, as amended, 47 U.S.C. 151, 154(i), 302, 303(f) and (r), 332.

7. The Petition for Partial Reconsideration filed by Aeronautical Radio, Inc. on June 14, 2001 is granted.

8. Pursuant to sections 1, 4(i), 302, 303(f) and (r), and 332 of the Communications Act of 1934, as amended, 47 U.S.C. 151, 154(i), 302, 303(f) and (r), 332, part 87 of the Commission's rules, 47 CFR part 87, is amended as set forth in Rule Changes, effective March 4, 2002.

17. The Commission's Consumer Information Bureau, Reference Information Center, shall send a copy of this *Memorandum Opinion and Order,* including the Final Regulatory Flexibility Certification, to the Chief Counsel for Advocacy of the Small Business Administration.

List of Subjects in 47 CFR Part 87

Air transportation; Radio.

Federal Communications Commission.

William F. Caton,

Deputy Secretary.

Rule Changes

For reasons discussed in the preamble, the Federal Communication Commission amends 47 CFR part 87 as follows:

PART 87—AVIATION SERVICES

1. The authority citation for part 87 continues to read as follows:

Authority: 47 U.S.C. 154, 303, and 307(e), unless otherwise noted.

2. Section 87.139 is amended by revising paragraph (k) to read as follows:

§ 87.139 Emission limitations.

* * * * *

(k) For VHF aeronautical stations and aircraft stations operating with G1D or G7D emissions:

(1) The amount of power measured across either first adjacent 25 kHz channel shall not exceed 2 dBm.

(2) For stations first installed before January 1, 2002, the amount of power measured across either second adjacent channel shall be less than −25 dBm and the power measured in any other adjacent 25 kHz channels shall monotonically decrease at a rate of at least 5 dB per octave to a maximum value of −52 dBm. For stations first installed on or after January 1, 2002,

(i) The amount of power measured across either second adjacent 25 kHz channel shall be less than −28 dBm;

(ii) The amount of power measured across either fourth adjacent 25 kHz channel shall be less than −38 dBm; and

(iii) From thereon the power measured in any other adjacent 25 kHz channel shall monotonically decrease at a rate of at least 5 dB per octave to a maximum value of −53 dBm.

(3) The amount of power measured over a 16 kHz channel bandwidth centered on the first adjacent 25 kHz channel shall not exceed −18 dBm.

[FR Doc. 02–2284 Filed 1–30–02; 8:45 am]

BILLING CODE 6712–01–P

DEPARTMENT OF TRANSPORTATION

Office of the Secretary

49 CFR Part 40

Procedures for Transportation Workplace Drug and Alcohol Testing Programs

CFR Correction

In Title 49 of the Code of Federal Regulations, Parts 1 to 99, revised as of October 1, 2001, on page 593, § 40.45 is corrected by revising paragraph (a) to read as follows:

§ 40.45 What form is used to document a DOT urine collection?

(a) The Federal Drug Testing Custody and Control Form (CCF) must be used to document every urine collection required by the DOT drug testing program. The CCF must be a five-part carbonless manifold form. You may view this form on the Department's web site (http://www.dot.gov/ost/dapc) or the HHS web site (http://www.workplace.samhsa.gov).

* * * * *

[FR Doc. 02–55503 Filed 1–30–02; 8:45 am]

BILLING CODE 1505–01–D

DEPARTMENT OF COMMERCE

National Oceanic and Atmospheric Administration

50 CFR Part 622

[Docket No. 001005281–0369–02; I.D. 012502C]

Fisheries of the Caribbean, Gulf of Mexico, and South Atlantic; Coastal Migratory Pelagic Resources of the Gulf of Mexico and South Atlantic; Closure

AGENCY: National Marine Fisheries Service (NMFS), National Oceanic and Atmospheric Administration (NOAA), Commerce.

ACTION: Closure.

SUMMARY: NMFS closes the commercial run-around gillnet fishery for king mackerel in the exclusive economic zone (EEZ) in the southern Florida west coast subzone. This closure is necessary to protect the Gulf king mackerel resource.

DATES: The closure is effective 6 a.m., local time, January 28, 2002, through 6:00 a.m., January 21, 2003.

FOR FURTHER INFORMATION CONTACT: Mark Godcharles, telephone: 727–570–5305, fax: 727–570–5583, e-mail: Mark.Godcharles@noaa.gov.

SUPPLEMENTARY INFORMATION: The fishery for coastal migratory pelagic fish (king mackerel, Spanish mackerel, cero, cobia, little tunny, dolphin, and, in the Gulf of Mexico only, bluefish) is managed under the Fishery Management Plan for the Coastal Migratory Pelagic Resources of the Gulf of Mexico and South Atlantic (FMP). The FMP was prepared by the Gulf of Mexico and South Atlantic Fishery Management Councils (Councils) and is implemented under the authority of the Magnuson-Stevens Fishery Conservation and Management Act (Magnuson-Stevens Act) by regulations at 50 CFR part 622.

Based on the Councils' recommended total allowable catch and the allocation ratios in the FMP, on April 30, 2001 (66 FR 17368, March 30, 2001) NMFS implemented a commercial quota of 2.25 million lb (1.02 million kg) for the eastern zone (Florida) of the Gulf migratory group of king mackerel. That quota is further divided into separate quotas for the Florida east coast subzone and the northern and southern Florida west coast subzones. On April 27, 2000, NMFS implemented the final rule (65 FR 16336, March 28, 2000) that divided the Florida west coast subzone of the eastern zone into northern and southern subzones, and established their separate quotas. The quota newly implemented for the southern Florida west coast subzone is 1,040,625 lb (472,020 kg). That quota is further divided into two equal quotas of 520,312 lb (236,010 kg) for vessels in each of two groups fishing with run-around gillnets and hook-and-line gear (50 CFR 622.42(c)(1)(i)(A)(*2*)(*i*)).

Under 50 CFR 622.43(a)(3), NMFS is required to close any segment of the king mackerel commercial fishery when its quota has been reached, or is projected to be reached, by filing a notification at the Office of the **Federal Register**. NMFS has determined that the commercial quota of 520,312 lb (236,010 kg) for Gulf group king mackerel for vessels using run-around gillnet gear in the southern Florida west coast subzone will be reached on January 27, 2002. Accordingly, the commercial fishery for king mackerel for such vessels in the southern Florida west coast subzone is closed at 6 a.m., local time, January 28, 2002, through 6:00 a.m., January 21, 2003, the beginning of the next fishing season, i.e., the day after the 2003 Martin Luther King Jr. Federal holiday.

The Florida west coast subzone is that part of the eastern zone south and west of 25°20.4′ N. lat. (a line directly east from the Miami-Dade County, FL, boundary). The Florida west coast subzone is further divided into northern and southern subzones. The southern subzone is that part of the Florida west coast subzone which from November 1 through March 31 extends south and west from 25°20.4′ N. lat. to 26°19.8′ N. lat.(a line directly west from the Lee/Collier County, FL, boundary), i.e., the area off Collier and Monroe Counties. From April 1 through October 31, the southern subzone is that part of the Florida west coast subzone which is between 26°19.8′ N. lat. and 25°48′ N. lat.(a line directly west from the Monroe/Collier County, FL, boundary), i.e., the area off Collier County.

Classification

This action responds to the best available information recently obtained from the fishery. The closure must be implemented immediately to prevent an overrun of the commercial quota (50 CFR 622.42(c)(1)) of Gulf group king mackerel, given the capacity of the fishing fleet to harvest the quota quickly. Overruns could potentially lead to further overfishing and unnecessary delays in rebuilding this resource. Therefore, any delay in implementing this action would be impractical and contradictory to the Magnuson-Stevens Act, the FMP, and the public interest. NMFS finds, for good cause, that the implementation of this action cannot be delayed for 30 days. Accordingly, under 5 U.S.C. 553(d), a delay in the effective date is waived.

This action is taken under 50 CFR 622.43(a) and is exempt from review under E.O. 12866.

Authority: 16 U.S.C. 1801 *et seq.*

Dated: January 25, 2002.

Jonathan M. Kurland,

Acting Director,Office of Sustainable Fisheries, National Marine Fisheries Service.

[FR Doc. 02–2295 Filed 1–25–02; 4:57 pm]

BILLING CODE 3510–22–S

DEPARTMENT OF COMMERCE

National Oceanic and Atmospheric Administration

50 CFR Part 679

[Docket No. 011218304-1304-01; I.D. 012402B]

Fisheries of the Exclusive Economic Zone Off Alaska; Pollock in Statistical Area 630 of the Gulf of Alaska

AGENCY: National Marine Fisheries Service (NMFS), National Oceanic and Atmospheric Administration (NOAA), Commerce.

ACTION: Modification of a closure.

SUMMARY: NMFS is opening directed fishing for pollock in Statistical Area 630 of the Gulf of Alaska (GOA) for 24 hours. This action is necessary to fully use the first seasonal apportionment of the total allowable catch (TAC) of pollock specified for this area.

DATES: Effective 1200 hrs, Alaska local time (A.l.t.), January 29, 2002, until 1200 hrs, A.l.t., January 30, 2002.

FOR FURTHER INFORMATION CONTACT: Mary Furuness, 907–586–7228.

SUPPLEMENTARY INFORMATION: NMFS manages the groundfish fishery in the GOA exclusive economic zone according to the Fishery Management Plan for Groundfish of the Gulf of Alaska (FMP) prepared by the North Pacific Fishery Management Council under authority of the Magnuson-Stevens Fishery Conservation and Management Act. Regulations governing fishing by U.S. vessels in accordance with the FMP appear at subpart H of 50 CFR part 600 and 50 CFR part 679.

The ''A'' season allowance of the 2002 pollock TAC in Statistical Area 630 of the GOA was established as 1,122 metric tons by an emergency rule implementing 2002 harvest specifications and associated management measures for the groundfish fisheries off Alaska (67 FR 956, January 8, 2002).

NMFS closed the directed fishery for pollock in Statistical Area 630 of the GOA under § 679.20(d)(1)(iii) on January 21, 2002 (67 FR 3126, January 23, 2002).

NMFS has determined that approximately 522 mt currently remain in the directed fishing allowance. Therefore, NMFS is terminating the previous closure and is opening directed fishing for pollock in Statistical Area 630 of the GOA. In accordance with § 679.20(d)(1)(iii), the Regional Administrator finds that this directed fishing allowance will be reached after 24 hours. Consequently, NMFS is prohibiting directed fishing for pollock in Statistical Area 630 of the GOA effective 1200 hrs, A.l.t., January 30, 2002.

Classification

This action responds to the best available information recently obtained from the fishery. The Assistant Administrator for Fisheries, NOAA, finds that the need to immediately implement this action to allow full use the amount of the 2002 A season pollock TAC specified for Statistical Area 630 of the GOA constitutes good cause to waive the requirement to provide prior notice and opportunity for public comment pursuant to the authority set forth at 5 U.S.C. 553(b)(3)(B) and 50 CFR 679.20(b)(3)(iii)(A), as such procedures would be unnecessary and contrary to the public interest. Similarly, the need to implement these measures in a timely fashion to allow full use the amount of the 2002 A season pollock TAC specified for Statistical Area 630 of the GOA constitutes good cause to find that the effective date of this action cannot be delayed for 30 days. Accordingly, under 5 U.S.C. 553(d), a delay in the effective date is hereby waived.

This action is required by § 679.20 and is exempt from review under Executive Order 12866.

Authority: 16 U.S.C. 1801 *et seq.*

Dated: January 25, 2002.

Jonathan M. Kurland,

Acting Director, Office of Sustainable Fisheries, National Marine Fisheries Service.

[FR Doc. 02–2402 Filed 1–29–02; 9:18 am]

BILLING CODE 3510–22–S

Proposed Rules

Federal Register
Vol. 67, No. 21
Thursday, January 31, 2002

This section of the FEDERAL REGISTER contains notices to the public of the proposed issuance of rules and regulations. The purpose of these notices is to give interested persons an opportunity to participate in the rule making prior to the adoption of the final rules.

DEPARTMENT OF AGRICULTURE

Rural Utilities Service

7 CFR Part 1755

RUS Specification for Voice Frequency Loading Coils

AGENCY: Rural Utilities Service, USDA.

ACTION: Proposed rule.

SUMMARY: The Rural Utilities Service (RUS) proposes to amend its regulations on Telecommunications Standards and Specifications for Materials, Equipment and Construction, by rescinding the current issue of RUS Bulletin 345–22, RUS Specification for Voice Frequency Loading Coils, PE–26. This specification has become outdated because of advancements made in the delivery of telecommunications services to rural subscribers. This bulletin is incorporated by reference in RUS telecommunications regulations. Therefor, RUS is requesting public comments on this proposed rescission.

DATES: Comments concerning this proposed rule shall be received by RUS or be postmarked no later than April 1, 2002.

ADDRESSES: Comments should be mailed to Gerald F. Nugent, Jr., Director, Telecommunications Standards Division, Rural Utilities Service, U.S. Department of Agriculture, 1400 Independence Avenue, SW., STOP 1598, Washington, DC 20250–1598. RUS requests an original and three copies of all comments (7 CFR part 1700). All comments received will be made available for public inspection at room 2905, South Building, U.S. Department of Agriculture, 1400 Independence Avenue, SW., STOP 1598 Washington, DC between 8 a.m. and 4 p.m. (7 CFR 1.27(b)).

FOR FURTHER INFORMATION CONTACT: Charlie I. Harper, Jr., Chief, Outside Plant Branch, Telecommunications Standards Division, Rural Utilities Service, U.S. Department of Agriculture, 1400 Independence Avenue, SW., STOP 1598, Washington, DC 20250–1598, telephone (202) 720–0667.

SUPPLEMENTARY INFORMATION:

Executive Order 12866

This proposed rule is exempt from the Office of Management and Budget (OMB) review for the purposes of Executive Order 12866 and, therefore has not been reviewed by OMB.

Executive Order 12988

This proposed rule has been reviewed under Executive Order 12988, Civil Justice Reform. RUS has determined that this proposed rule meets the applicable standards provided in section 3 of that Executive Order. In addition, all State and local laws and regulations that are in conflict with this rule will be preempted, no retroactive effect will be given to this rule, and, in accordance with section 212(e) of the Department of Agriculture Reorganization Act of 1994 (7 U.S.C. 6912(e)), administrative appeal procedures, if any, must be exhausted before an action against the Department or its agencies may be initiated.

Regulatory Flexibility Act Certification

RUS has determined that this proposed rule will not have a significant economic impact on a substantial number of small entities, as defined by the Regulatory Flexibility Act (5 U.S.C. 601 *et seq.*). The RUS telecommunications program provides loans to borrowers at interest rates and on terms that are more favorable than those generally available from the private sector. RUS borrowers, as result of obtaining federal financing, receive economic benefits that exceed any direct economic costs associated with complying with RUS regulations and requirements. Small entities are not subjected to any requirement which are not applied equally to large entities.

Information Collection and Recordkeeping Requirements

This proposed rule contains no information collection or recordkeeping requirements under the Paperwork Reduction Act of 1995 (44 U.S.C. Chapter 35).

National Environmental Policy Act Certification

The Administrator of RUS has determined that this proposed rule will not significantly affect the quality of the human environment as defined by the National Environmental Policy Act of 1969 (42 U.S.C. 4321 *et seq.*). Therefore, this action does not require an environmental impact statement or assessment.

Catalog of Federal Domestic Assistance

The program described by this proposed rule is listed in the Catalog of Federal Domestic Assistance programs under No. 10.851, Rural Telephone Loans and Loan Guarantees, and No. 10.852, Rural Telephone Bank Loans. This catalog is available on a subscription basis from the Superintendent of Documents, the United States Government Printing Office, Washington, DC 20402–9325. Telephone (202) 512–1800.

Executive Order 12372

This proposed rule is excluded from the scope of Executive Order 12372, Intergovernmental Consultation, which may require consultation with State and local officials. See the final rule related notice entitled, ''Department Programs and Activities Excluded from Executive Order 12372,'' (50 FR 47034).

Unfunded Mandates

This proposed rule contains no Federal mandates (under the regulatory provision of Title II of the Unfunded Mandates Reform Act) for State, local, and tribal governments or the private sector. Thus, this proposed rule is not subject to the requirements of section 202 and 205 of the Unfunded Mandates Reform Act.

Background

RUS issues publications titled ''bulletins'' which serve to guide borrowers regarding already codified policy, procedures, and requirements needed to manage loans, loan guarantee programs, and the security instruments which provide for and secure RUS financing. RUS issues standards and specifications for construction of telecommunications facilities financed with RUS loan funds. After review of RUS's bulletin and specification issuances, RUS has decided to propose to rescind the outdated RUS Bulletin 345–22, RUS Specification for Voice Frequency Loading Coils, PE–26, issued January 19, 1989. RUS felt rescission was the best option for this bulletin and welcomes public comment. This

bulletin is incorporated by reference at 7 CFR 1755.97.

RUS Bulletin 345–22, RUS Specification for Voice Frequency Loading Coils, PE–26, specifies the technical requirements for voice frequency loading coils that are used in aerial, direct burial, and underground plant installations. Since RUS borrowers are designing and constructing new plant facilities capable of handling both voice and data transmission which require that loop lengths be shorter than 18,000 feet, the installation of voice frequency loading coils in these new transmission facilities using these shorter loop lengths is no longer required. Therefore RUS is proposing to rescind this bulletin because of obsolescence.

List of Subjects in 7 CFR Part 1755

Loan programs-communications, Reporting and recordkeeping requirements, Rural areas, Telephone.

For reasons set out in the preamble, RUS proposes to amend Chapter XVII of title 7 of the Code of Federal Regulations as follows:

PART 1755—TELECOMMUNICATIONS STANDARDS AND SPECIFICATIONS FOR MATERIALS, EQUIPMENT AND CONSTRUCTION

1. The authority citation for part 1755 continues to read as follows:

Authority: 7 U.S.C. 901 *et seq.*, 1921 *et seq.*, 6941 *et seq.*

§ 1755.97 [Amended]

2. Section 1755.97 is amended by removing the entry ''RUS Bulletin No. 345–22'' from the table.

Dated: January 14, 2002.

Hilda Gay Legg,

Administrator, Rural Utilities Service.

[FR Doc. 02–2298 Filed 1–30–02; 8:45 am]

BILLING CODE 3410–15–P

DEPARTMENT OF TRANSPORTATION

Federal Aviation Administration.

14 CFR Chapter I

[Docket No.: FAA–2000–7623]

Review of Existing Regulations

AGENCY: Federal Aviation Administration (FAA), DOT.

ACTION: Disposition of comments on existing regulations.

SUMMARY: The FAA is notifying the public of the outcome of our periodic review of existing regulations. This action summarizes the public comments we received and our responses to them. This action is part of our effort to make our regulatory program more effective and less burdensome.

FOR FURTHER INFORMATION CONTACT: Patrick W. Boyd, Office of Rulemaking, ARM–23, Federal Aviation Administration, 800 Independence Avenue SW., Washington, DC 20591; telephone (202) 267–7320.

SUPPLEMENTARY INFORMATION:

Background

Under section 5 of Executive Order 12866, Regulatory Planning and Review, each agency has developed a program to periodically review its existing regulations to determine if they should be changed or eliminated. See 58 FR 51735, October 4, 1993. The purposes of the review are to make the agency's regulatory program more effective in achieving the regulatory objectives and less burdensome. The FAA conducts its review on a three-year cycle.

On July 13, 2000, we published a document in the **Federal Register** asking the public to tell us which regulations we should amend, eliminate, or simplify. See 65 FR 43265. The document stated that we would consider the comments and adjust our regulatory priorities, consistent with our statutory responsibilities. The document also stated we would publish a summary of the comments and an explanation of how we would act on them.

Summary of Comments

In response to the July document, we received a total of 476 comments from 207 different commenters. The issue generating the most public comments is the proposed Aviation Noise Abatement Policy 2000, which we published in the **Federal Register** on July 14, 2000. See 65 FR 43802. The noise-related topics most frequently mentioned include the following:

- Noise levels,
- Day/night average sound levels,
- Local control,
- Minimum altitude requirements,
- Supersonic aircraft and sonic booms,
- National park overflights,
- The FAA's and the public's conflict of interest,
- Night flights, and
- General comments about the policy.

Overall, commenters are opposed to both the proposed policy and the growing noise problem and indicated that the FAA should do more to protect the public from aircraft noise. The commenters addressed the following specific issues:

- Reducing the current maximum noise allotment (decibel level is too high);
- Creating different noise levels for day and night;
- Giving communities more local control over noise policies;
- Increasing the minimum altitude requirements (many commenters specified 3,000 feet);
- Creating stricter regulations for supersonic aircraft and sonic booms, helicopters, and ultralights; and
- Banning or reducing the overflights of national parks to preserve the park and wildlife.

Other issues not related to the proposed noise policy that were raised by the commenters include the following:

- Age 60 rule: Commenters indicated that this rule causes age discrimination and, because of advances in medical technology, some people remain healthy and fit to fly after age 60.
- Agricultural aircraft flight operations: Commenters addressed the dispensing of chemicals and the differences in agricultural operations over congested areas versus noncongested areas.
- Annual aircraft inspections: Commenters favored an increase between aircraft inspections from 1 year to 1½, 2, or 3 years.
- Biennial flight reviews: Commenters stated that biennial flight reviews should be allowed in aircraft without fully functioning dual controls.
- Certification requirements for commercial pilots: Some commenters indicated that the regulations need to be clarified and need to have regulatory options for gliders, because gliders are different than other aircraft and some of the current regulations are irrelevant. Commenters also specifically requested clarification of solo requirements.
- Certification requirements for private pilots: Some commenters encouraged more night flying requirements, especially for training. Commenters also requested specific glider requirements.
- Commuter and on-demand flight operations: Commenters discussed takeoff, approach, and landing minimums and how long records should be kept on file.
- Drug and alcohol use, testing, and offenses: Some commenters believe charity airlifts and smaller flight operations should be excused from drug and alcohol testing requirements and that regulations concerning use of alcohol should be more restrictive with ''zero tolerance.'' Various commenters also requested clarification of the

regulations dealing with drug or alcohol offenses in aircraft or in motor vehicles.

• Flight- and duty-time rest requirements: Some commenters indicated that there should be a better definition of ''duty time'' and its official beginning or end. The commenters suggested having one set of regulations instead of a set for each kind of operation.

• Instrument and equipment requirements: Commenters discussed certain types of equipment, such as transponders, aircraft lights, pitot heat indication systems, emergency equipment, and flight recorders. Some commenters want more stringent regulations, while others want fewer restrictions and some indicated the regulation should be deleted.

• Medical standards and certification: Commenters addressed medical waivers, self-certification for medical certificates, eye requirements and tests, and the removal of the physical requirements for private pilots.

• Minimum altitude requirements: Commenters requested overall clarification of the minimum altitude requirements. One commenter suggested that hot-air balloons not be restricted by a minimum altitude.

• Recent night flight experience: Most commenters indicated that the requirements for recent night flight experience are too stringent and need to be reevaluated.

• Single-engine certification course: Commenters requested that the commercial pilot, single-engine aircraft certification course requirement allow training to be conducted in multi-engine aircraft because many commercial pilots already have multi-engine aircraft ratings.

Note: All comments received on this topic are form letters from various commenters.

Although no commenters specifically addressed the Regulatory Flexibility Act, the National Air Transportation Association commented that its small business members are burdened by unnecessary or unclear regulations, specifically addressing the flight- and duty-time rest requirements. Other commenters implied that certain regulations cause undue economic, staffing, or work burdens for them as well. No comments addressed the topic of performance-based versus prescriptive regulations, and only one commenter suggested a simplified, plain language rewrite of the flight- and duty-time rest requirements.

Issues That We Will Consider for Rulemaking

During the review of comments, the FAA didn't identify any comments or recommendations that require response through an immediate rulemaking. The FAA notes, however, that several commenters raised issues that merit consideration for future rule changes. As opportunities arise, we will try to incorporate these issues into ongoing and future projects. For example, in response to the comment that hot-air balloons not be included in the minimum altitude requirements, the FAA is gathering data generated from flight testing taking place under an exemption for the balloon altitude restriction. The FAA will analyze these data for a possible change of minimum altitude requirements for balloons.

One commenter recommended that we revise commuter and on-demand flight operations regulations to reflect the unique capabilities of helicopters. The FAA agrees that a change in the operating specifications for helicopters may be warranted.

Some commenters suggested changing the instrument and equipment requirements. Specifically, one commenter suggested that protective breathing equipment (PBE) be checked before each flightcrew change, not before each flight. The FAA agrees. It wasn't our intent to require a check of PBE at the beginning of each flight. In addition, one commenter recommended that the FAA remove the regulations requiring signal flares. The FAA issued this regulation before there were radar, global positioning systems (GPSs), and continuous communications; therefore, the requirement to carry signal flares is outdated and could be removed from the regulation without reducing safety.

Other issues the FAA will consider for future rulemaking include the following:

• Revising 14 CFR 23.1587(a)(1) regarding airplane performance to reference both ''clean'' and landing configurations and 14 CFR 23.1587(a)(2) to specify ''multiengine.''

• Amending 14 CFR 91.109(a) to permit dual instruction in airplanes that lack dual flight controls.

• Revising 14 CFR 121.711 regarding radio communications because it is outdated.

• Codifying Exemption No. 3585 into the rules for dispatching. Exemption No. 3585 permits part 121 operators to continue to dispatch airplanes under instrument flight rules (IFR) when conditional language in a one-time increment of the weather forecast states that the weather at the destination airport, alternate airport, or both airports could be below the authorized weather minimums. This would occur when other time increments of the weather forecast state that the weather conditions will be at or above the authorized weather minimums.

• Clarifying the language for weather minimums for special visual flight rules.

Issues We Are Currently Addressing

The FAA is currently considering numerous issues addressed by the commenters. The most common issues include the following:

• The Aviation Noise Abatement Policy 2000: The FAA is preparing a final version.

• Airworthiness directives: The FAA will address comments related to proposed airworthiness directives (ADs) during the preparation of final ADs.

• Certification requirements for mechanics: The FAA is now studying this issue as a prerequisite for future rulemaking.

• Certification requirements for pilots: The FAA is drafting a notice of proposed rulemaking (NPRM) on additional revisions to the pilot, flight instructor, and pilot school certification rules.

• Drug and alcohol use, testing, and offenses: The FAA is drafting an NPRM on anti-drug and alcohol misuse prevention programs for personnel engaged in specified aviation activities.

• Flight and duty time rest requirements: The FAA is drafting a supplemental NPRM on flight crewmember duty period, flight-time, and rest requirements.

• Single-engine certification course: The FAA has incorporated recommendations by commenters into the rulemaking project on additional revisions to the pilot, flight instructor, and pilot school certification rules.

The FAA is also addressing policies and procedures regarding issues raised by commenters. For example, one commenter suggested that the FAA review the redundancy in the Aircraft Certification Systems Evaluation Program (ACSEP) evaluations and ongoing principal inspector assignments. The FAA is currently addressing this issue in the ''AIR–200 ACSEP Phase II'' project scheduled for implementation in fiscal year 2002.

In addition, the Aviation Rulemaking Advisory Committee (ARAC) most recently considered numerous issues addressed by the commenters, including the following:

• Alternate inspection program/annual aircraft inspections: the 14 CFR part 43 General Aviation Working Group addressed these issues in the

NPRM that the working group presented to the Air Carrier and General Aviation Maintenance Issue Area.

- Major/minor repairs or alterations: the ARAC will consider comments during its review of a task on major/minor repairs or alterations.
- Pressurized compartment loads: the ARAC will consider comments during its review of a task on pressurized compartment loads.
- Pressurized and low pressure pneumatic systems: these issues were discussed at past working group meetings, but were not included in the draft rule. The harmonization working group will address this issue at its next meeting.

One commenter stated that the current regulations indicate a major difference between 14 CFR part 25 and JAR 25, jeopardizing the objective of harmonization. The FAA is aware of industry concerns regarding this regulation and plans to have the ARAC Transport Airplane and Engine Issue Area and the Occupant Safety Issue Area address harmonization efforts.

Issues That We May Address in the Future

The FAA received comments on issues it may consider for future action, such as initiating new or revising existing guidance material, policies, or procedures. One commenter suggested that very high frequency omnirange station (VOR) equipment checks be permitted against an installed IFR-certified GPS receiver in addition to checking against a second VOR receiver. The FAA notes that using a GPS as a cross-reference for the VOR could show a higher degree of accuracy than comparing one VOR to another. The FAA will examine this issue and determine its use as a possible new procedure.

Issues That We Have Addressed

The FAA had already addressed some recommendations made by commenters. They were addressed as NPRMs or final rules before the request for comments for the Review of Existing Rules was published. Several commenters recommend changing the Age 60 Rule. The FAA notes that on December 11, 1995, it issued a Disposition of Comments and Notice of Agency Decisions (Disposition) regarding the Age 60 Rule. The Disposition announced the FAA's determination not to propose to change the Age 60 Rule at that time; the FAA maintains that position. One commenter recommended that the requirement for a valid medical certificate be dropped from the private pilot certificate criteria because it places a financial and managerial burden on the FAA and has no correlation to safety. The FAA notes that this recommendation was originally proposed in the Pilot, Flight Instructor, Ground Instructor, and Pilot School Certification Rules NPRM (60 FR 41160, Aug. 11, 1995), but was withdrawn from the final rule. Another commenter suggested that the FAA extend the exception to the recent night flight takeoff and landing experience requirements for pilots who hold more than one type rating; the commenter suggested extending it to pilots in command (PICs) who hold only one type rating. The FAA notes that it considered this change during the development of the final rule on 14 CFR 61.57(e)(3); however, it rejected the change because the purpose of the regulation was not to alleviate the night takeoff and landing currency, but to alleviate a financial burden on pilots who operate multiple type-rated airplanes requiring a pilot crew of two or more.

In addition, the FAA received comments on issues that became final rules after the comment period closed. For example, one commenter suggested that the Federal Bureau of Investigation perform the background checks for employees requiring unescorted access to the Security Identification Display Area (SIDA) because of the difficulty and economic burden that it places on the employee. Another commenter suggested that if a fixed-base operator is physically separated from the air carrier areas of the airport, it should be excluded from the SIDA. The FAA considered these comments during the development of the final rule on airport security, 14 CFR part 107, issued July 2, 2001 (66 FR 37273).

Issues That We Won't Address

In some cases, the FAA found that the current regulation is necessary and doesn't need a revision, or the recommendations didn't address a safety concern. For example, some commenters suggested that the Mode C transponder requirement be expanded in the Los Angeles International Airport area because of the intense air traffic. The FAA doesn't agree that further rulemaking in this case would measurably enhance the operation of the national airspace system. Some commenters suggested that the recent night flight experience regulation causes inconvenience and financial expenditure, and the FAA should reevaluate or eliminate the requirement. The FAA doesn't believe the recommendation to eliminate the PIC night takeoff and landing currency requirements can be justified considering the FAA's statutory requirements to regulate safety and air commerce. Other commenters suggested that the FAA revise 14 CFR 91.109 to permit a biennial flight review (BFR) to be given in an airplane without fully functional dual controls. The FAA believes that because a BFR is a training session by a flight instructor, dual controls for a BFR are justified in the interest of safety. One commenter stated that the definitions of ''congested,'' ''noncongested,'' and ''other than congested'' areas in relation to agricultural aircraft regulations are clear. However, the commenter stated that the local FAA who takes enforcement action on an agricultural airplane operator for low flying interprets the regulation to correspond to circumstances at the time instead of following the regulations. The commenter questions whether the regulations are being followed or if the FAA is ''satisfying urban sprawl.'' The FAA notes that 14 CFR 137.49 provides relief to the agricultural aerial applicator from the minimum altitude requirements; therefore, a revision to the regulation is not necessary.

Conclusion

The FAA finds that reviewing public comments on our regulations helps us in assessing the effectiveness of our regulatory agenda and adjusting the agenda, when necessary. As a result of this review, we have identified several issues that we will address in future rulemaking projects. In addition, the review offers us a general understanding of the public's concerns regarding our regulations. We intend to continue to request public comments on a three-year cycle to identify any necessary changes to our regulatory program. We plan to issue a document soliciting public comments for our next review in 2003.

Issued in Washington, DC, on January 18, 2002.

Nicholas A. Sabatini,

Associate Administrator for Regulation and Certification.

[FR Doc. 02–2277 Filed 1–30–02; 8:45 am]

BILLING CODE 4910–13–P

DEPARTMENT OF TRANSPORTATION

Federal Aviation Administration

14 CFR Part 39

[Docket No. 2001–CE–43–AD]

RIN 2120–AA64

Airworthiness Directives; Raytheon Aircraft Company Models E55, E55A, A56TC, 58, 58A, 58P, 58PA, 58TC, and 58TCA Airplanes

AGENCY: Federal Aviation Administration, DOT.

ACTION: Notice of proposed rulemaking (NPRM).

SUMMARY: This document proposes to adopt a new airworthiness directive (AD) that would apply to certain Raytheon Aircraft Company (Raytheon) Models E55, E55A, A56TC, 58, 58A, 58P, 58PA, 58TC, and 58TCA airplanes. This proposed AD would require you to inspect the Instrument Subpanel electroluminescent panel retaining screw for proper length and the rotating beacon circuit breaker switch (or any other switch in the same location) for damage, and replace any screw or circuit breaker switch as necessary. This proposed AD is the result of a report that an improper length electroluminescent panel retaining screw damaged the rotating beacon circuit breaker switch which resulted in damaged wiring. The actions specified by this proposed AD are intended to prevent damage to the rotating beacon circuit breaker switch or any other switch in the same location because of an incorrect length electroluminescent panel retaining screw. This condition could result in failure of the circuit breaker and lead to smoke and/or fire in the cockpit.

DATES: The Federal Aviation Administration (FAA) must receive any comments on this proposed rule on or before April 5, 2002.

ADDRESSES: Submit comments to FAA, Central Region, Office of the Regional Counsel, Attention: Rules Docket No. 2001–CE–43–AD, 901 Locust, Room 506, Kansas City, Missouri 64106. You may view any comments at this location between 8 a.m. and 4 p.m., Monday through Friday, except Federal holidays.

You may get service information that applies to this proposed AD from Raytheon Aircraft Company, P.O. Box 85, Wichita, Kansas 67201–0085; telephone: (800) 429–5372 or (316) 676–3140. You may also view this information at the Rules Docket at the address above.

FOR FURTHER INFORMATION CONTACT: Todd Dixon, Aerospace Engineer, FAA, Wichita Aircraft Certification Office, 1801 Airport Road, Room 100, Mid-Continent Airport, Wichita, Kansas 67209; telephone: (316) 946–4152; facsimile: (316) 946–4407.

SUPPLEMENTARY INFORMATION:

Comments Invited

How Do I Comment on This Proposed AD?

The FAA invites comments on this proposed rule. You may submit whatever written data, views, or arguments you choose. You need to include the rule's docket number and submit your comments to the address specified under the caption **ADDRESSES.** We will consider all comments received on or before the closing date. We may amend this proposed rule in light of comments received. Factual information that supports your ideas and suggestions is extremely helpful in evaluating the effectiveness of this proposed AD action and determining whether we need to take additional rulemaking action.

Are There Any Specific Portions of This Proposed AD I Should Pay Attention To?

The FAA specifically invites comments on the overall regulatory, economic, environmental, and energy aspects of this proposed rule that might suggest a need to modify the rule.

You may view all comments we receive before and after the closing date of the rule in the Rules Docket. We will file a report in the Rules Docket that summarizes each contact we have with the public that concerns the substantive parts of this proposed AD.

How Can I Be Sure FAA Receives My Comment?

If you want FAA to acknowledge the receipt of your comments, you must include a self-addressed, stamped postcard. On the postcard, write ''Comments to Docket No. 2001–CE–43–AD.'' We will date stamp and mail the postcard back to you.

Discussion

What Events Have Caused This Proposed AD?

Raytheon notified FAA of an incident where the pilot had to return to the departing airport after declaring an emergency because of smoke in the cockpit. After investigation, FAA determined that the cause of smoke in the cockpit was a result of damage to the rotating beacon circuit breaker switch caused by an improper length electroluminescent panel retaining screw. The damaged circuit breaker switch failed to shutdown the electrical current to the rotating beacon. Failure of the circuit breaker switch caused the wiring to burn through the insulation and the other wires in the wire bundle that were routed with the wiring to the rotating beacon circuit breaker switch.

What Are the Consequences if the Condition Is Not Corrected?

This condition, if not corrected, could result in failure of the rotating beacon circuit breaker switch or any other switch in the same location. Failure of the circuit breaker switch could result in smoke and/or fire in the cockpit.

Is There Service Information That Applies to This Subject?

Raytheon has issued Mandatory Service Bulletin SB 33–3452, Issued: May, 2001.

What Are the Provisions of This Service Information?

The service bulletin includes procedures for:

—Inspecting the Instrument Subpanel electroluminescent panel for the installation of a rotating beacon circuit breaker switch or any other switch installed directly above the electroluminescent panel retaining screw;

—Inspecting the installed switch for damage;

—Replacing any damaged switch;

—Inspecting the electroluminescent panel retaining screw to ensure correct length; and

—Replacing any incorrect length electroluminescent panel retaining screw with a part number (P/N) MS35214–24 screw.

The FAA's Determination and an Explanation of the Provisions of This Proposed AD

What Has FAA Decided?

After examining the circumstances and reviewing all available information related to the incidents described above, we have determined that:

—The unsafe condition referenced in this document exists or could develop on other Raytheon Models E55, E55A, A56TC, 58, 58A, 58P, 58PA, 58TC, and 58TCA airplanes of the same type design;

—The actions specified in the previously-referenced service information should be accomplished on the affected airplanes; and

—AD action should be taken in order to correct this unsafe condition.

What Would This Proposed AD Require?

This proposed AD would require you to incorporate the actions in the previously-referenced service bulletin.

What Are the Differences Between This Proposed AD and the Service Information?

Raytheon Mandatory Service Bulletin No. SB 33–3452, Issued: May, 2001, is applicable to Models E55, A56TC, 58, 58P, and 58TC airplanes. We have expanded the applicability of this proposed AD to include Models E55A, 58A, 58PA, and 58TCA airplanes. The serial number ranges of the affected models indicated in the service information includes these models as indicated on Type Certificate Data Sheet 3A16, dated January 15, 2000.

Raytheon Mandatory Service Bulletin No. SB 33–3452, Issued: May, 2001, specifies that you accomplish the inspection within 25 hours time-in-service (TIS) or 10 days after the effective date of the AD. We propose a requirement that you inspect within 100 hours TIS after the effective date of this proposed AD.

We do not have justification to require this action within 25 hours TIS. We use compliance times such as this when we have identified an urgent safety of flight situation. We believe that 100 hours TIS will give the owners or operators of the affected airplanes enough time to have the proposed actions accomplished without compromising the safety of the airplanes.

Cost Impact

How Many Airplanes Would This Proposed AD Impact?

We estimate that this proposed AD affects 1,636 airplanes in the U.S. registry.

What Would Be the Cost Impact of This Proposed AD on Owners/Operators of the Affected Airplanes?

We estimate the following costs to accomplish the proposed inspection:

Labor cost	Parts cost	Total cost per airplane	Total cost on U.S. operators
1 workhour × $60 = $60	No parts required for the inspection	$60	$98,160

We estimate the following costs to accomplish any necessary replacements that would be required based on the results of the proposed inspection. We have no way of determining the number of airplanes that may need such replacements:

Labor cost	Parts cost	Total cost per airplane
3 workhours × $60 = $180	$1 for new electroluminescent panel retaining screw. $40 for new circuit breaker switch	$180 + applicable replacement part(s) cost

Regulatory Impact

Would This Proposed AD Impact Various Entities?

The regulations proposed herein would not have a substantial direct effect on the States, on the relationship between the national government and the States, or on the distribution of power and responsibilities among the various levels of government. Therefore, it is determined that this proposed rule would not have federalism implications under Executive Order 13132.

Would This Proposed AD Involve a Significant Rule or Regulatory Action?

For the reasons discussed above, I certify that this proposed action (1) is not a ''significant regulatory action'' under Executive Order 12866; (2) is not a ''significant rule'' under DOT Regulatory Policies and Procedures (44 FR 11034, February 26, 1979); and (3) if promulgated, will not have a significant economic impact, positive or negative, on a substantial number of small entities under the criteria of the Regulatory Flexibility Act. A copy of the draft regulatory evaluation prepared for this action has been placed in the Rules Docket. A copy of it may be obtained by contacting the Rules Docket at the location provided under the caption **ADDRESSES**.

List of Subjects in 14 CFR Part 39

Air transportation, Aircraft, Aviation safety, Safety.

The Proposed Amendment

Accordingly, under the authority delegated to me by the Administrator, the Federal Aviation Administration proposes to amend part 39 of the Federal Aviation Regulations (14 CFR part 39) as follows:

PART 39—AIRWORTHINESS DIRECTIVES

1. The authority citation for part 39 continues to read as follows:

Authority: 49 U.S.C. 106(g), 40113, 44701.

§ 39.13 [Amended]

2. FAA amends § 39.13 by adding a new airworthiness directive (AD) to read as follows:

Raytheon Aircraft Company: Docket No. 2001–CE–43–AD

(a) *What airplanes are affected by this AD?* This AD affects the following airplane models and serial numbers that are certificated in any category:

Model	Serial numbers
E55 and E55A	TE–768 through TE–1201
A56TC	TG–84 through TG–94
58 and 58A	TH–1 through TH–1388 and TH–1390 through TH–1395
58P and 58PA	TJ–3 through TJ–435 and TJ–437 through TJ–443
58TC and 58TCA.	TK–1 through TK–146 and TK–148 through TK–150

(b) *Who must comply with this AD?* Anyone who wishes to operate any of the airplanes identified in paragraph (a) of this AD must comply with this AD.

(c) *What problem does this AD address?* The actions specified by this AD are intended to prevent damage to the rotating beacon circuit breaker switch or any other switch in the same location because of an incorrect length electroluminescent panel retaining screw. This condition could result in failure of the circuit breaker and lead to smoke and/or fire in the cockpit.

(d) *What actions must I accomplish to address this problem?* To address this problem, you must accomplish the following:

Actions	Compliance	Procedures
(1) Inspect the Instrument Subpanel electroluminescent panel for the installation of a rotating beacon circuit breaker switch or any other switch directly above the lower electroluminescent panel retaining screw. (i) If a blanking plug is installed above the lower electroluminescent panel retaining screw, ensure that the correct length screw is installed. The correct length is 0.28 to 0.31 inches. (ii) If the screw is not the correct length, install part number (P/N) MS35214–24. (iii) If a rotating beacon circuit breaker switch or any other switch is installed, inspect the switch for damage.	Within the next 100 hours time-in-service (TIS) after the effective date of this AD.	In accordance with the Accomplishment Instructions section of Raytheon Mandatory Service Bulletin SB 33–3452, Issued: May, 2001.
(2) Replace any damaged switch found during the inspection required in paragraph (d)(1)(iii) of this AD and replace the electroluminescent panel retaining screw if it is not 0.28 to 0.31 inches in length with a P/N MS35214–24 screw.	Prior to further flight after the inspection required by paragraph (d)(1)(iii) of this AD.	In accordance with the Accomplishment Instructions section of Raytheon Mandatory Service Bulletin SB 33–3452, Issued: May, 2001.
(3) Only install an electroluminescent panel retaining screw in the lower part of the Instrument Subpanel (underneath the circuit breaker switches) that:. (i) Has a length of at least 0.28 inches but not longer than 0.31 inches; or (ii) Is P/N MS35214–24 or FAA-approved equivalent part number.	As of the effective date of this AD	Not applicable.

(e) *Can I comply with this AD in any other way?* You may use an alternative method of compliance or adjust the compliance time if:

(1) Your alternative method of compliance provides an equivalent level of safety; and

(2) The Manager, Wichita Aircraft Certification Office (ACO), approves your alternative. Submit your request through an FAA Principal Maintenance Inspector, who may add comments and then send it to the Manager, Wichita ACO.

Note: This AD applies to each airplane identified in paragraph (a) of this AD, regardless of whether it has been modified, altered, or repaired in the area subject to the requirements of this AD. For airplanes that have been modified, altered, or repaired so that the performance of the requirements of this AD is affected, the owner/operator must request approval for an alternative method of compliance in accordance with paragraph (e) of this AD. The request should include an assessment of the effect of the modification, alteration, or repair on the unsafe condition addressed by this AD; and, if you have not eliminated the unsafe condition, specific actions you propose to address it.

(f) *Where can I get information about any already-approved alternative methods of compliance?* Contact Todd Dixon, Aerospace Engineer, FAA, Wichita Aircraft Certification Office, 1801 Airport Road, Room 100, Mid-Continent Airport, Wichita, Kansas 67209; telephone: (316) 946–4152; facsimile: (316) 946–4407.

(g) *What if I need to fly the airplane to another location to comply with this AD?* The FAA can issue a special flight permit under sections 21.197 and 21.199 of the Federal Aviation Regulations (14 CFR 21.197 and 21.199) to operate your airplane to a location where you can accomplish the requirements of this AD.

(h) *How do I get copies of the documents referenced in this AD?* You may get copies of the documents referenced in this AD from Raytheon Aircraft Company, P.O. Box 85, Wichita, Kansas 67201–0085. You may view these documents at FAA, Central Region, Office of the Regional Counsel, 901 Locust, Room 506, Kansas City, Missouri 64106.

Issued in Kansas City, Missouri, on January 24, 2002.

Michael K. Dahl,

Acting Manager, Small Airplane Directorate, Aircraft Certification Service.

[FR Doc. 02–2300 Filed 1–30–02; 8:45 am]

BILLING CODE 4910–13–U

DEPARTMENT OF TRANSPORTATION

Federal Aviation Administration

14 CFR Part 39

[Docket No. 2001–SW–53–AD]

RIN 2120–AA64

Airworthiness Directives; Bell Helicopter Textron Canada Model 407 Helicopters

AGENCY: Federal Aviation Administration, DOT.

ACTION: Notice of proposed rulemaking (NPRM).

SUMMARY: This document proposes superseding an existing airworthiness directive (AD) for Bell Helicopter Textron Canada (BHTC) Model 407 helicopters. That AD currently requires preflight checking and repetitively inspecting the tailboom for a crack and replacing the tailboom if a crack is found. This action would require increasing the area of inspection for certain tailbooms and changing the applicability to restrict the inspection requirements to certain tailbooms that have not been redesigned. This proposal is prompted by cracking discovered in other areas of certain tailbooms and introduction of a redesigned tailboom with a chemically milled skin, which does not require the current inspections. The actions specified by the proposed AD are intended to remove certain tailbooms from the applicability and to increase the inspection requirements for certain tailbooms to prevent separation of the tailboom and subsequent loss of control of the helicopter.

DATES: Comments must be received on or before April 1, 2002.

ADDRESSES: Submit comments in triplicate to the Federal Aviation Administration (FAA), Office of the Regional Counsel, Southwest Region, Attention: Rules Docket No. 2001–SW–53–AD, 2601 Meacham Blvd., Room 663, Fort Worth, Texas 76137. You may also send comments electronically to the Rules Docket at the following address: *9-asw-adcomments@faa.gov.* Comments may be inspected at the Office of the Regional Counsel between

9 a.m. and 3 p.m., Monday through Friday, except Federal holidays.

FOR FURTHER INFORMATION CONTACT: Sharon Miles, Aviation Safety Engineer, FAA, Rotorcraft Directorate, Regulations Group, Fort Worth, Texas 76193–0111, telephone (817) 222–5122, fax (817) 222–5961.

SUPPLEMENTARY INFORMATION:

Comments Invited

Interested persons are invited to participate in the making of the proposed rule by submitting such written data, views, or arguments as they may desire. Communications should identify the Rules Docket number and be submitted in triplicate to the address specified above. All communications received on or before the closing date for comments will be considered before taking action on the proposed rule. The proposals contained in this document may be changed in light of the comments received.

Comments are specifically invited on the overall regulatory, economic, environmental, and energy aspects of the proposed rule. All comments submitted will be available, both before and after the closing date for comments, in the Rules Docket for examination by interested persons. A report summarizing each FAA-public contact concerned with the substance of this proposal will be filed in the Rules Docket.

Commenters wishing the FAA to acknowledge receipt of their mailed comments submitted in response to this proposal must submit a self-addressed, stamped postcard on which the following statement is made: ''Comments to Docket No. 2001–SW–53–AD. The postcard will be date stamped and returned to the commenter.

Availability of NPRMs

Any person may obtain a copy of this NPRM by submitting a request to the FAA, Office of the Regional Counsel, Southwest Region, Attention: Rules Docket No. 2001–SW–53–AD, 2601 Meacham Blvd., Room 663, Fort Worth, Texas 76137.

Discussion

On March 21, 2000, the FAA issued AD 2000–06–10, Amendment 39–11651 (65 FR 16804, March 30, 2000), to require preflight checking and repetitively inspecting the tailboom for a crack and replacing the tailboom if a crack is found. That action was prompted by four reports of cracks on the tailboom in the area of the horizontal stabilizer. The requirements of that AD are intended to prevent separation of the tailboom and subsequent loss of control of the helicopter.

Since the issuance of AD 2000–06–10, BHTC has issued Alert Service Bulletin ASB 407–99–26, Revision B, dated June 14, 2001 (ASB), to announce the release of an improved design tailboom assembly, P/N 407–030–801–201, that has been installed on BHTC Model 407 helicopters, serial number (S/N) 53476 and subsequent. The ASB states that these redesigned tailboom assemblies do not need the recurring inspection. For affected tailbooms, the ASB specifies extending the visual inspection to the area near certain fasteners on the left side of the tailboom forward of the horizontal stabilizer. Transport Canada, the airworthiness authority for Canada, classified this ASB as mandatory and issued AD CF–1999–17R1, dated July 24, 2001, to ensure the continued airworthiness of these helicopters in Canada.

This helicopter model is manufactured in Canada and is type certificated for operation in the United States under the provisions of 14 CFR 21.29 and the applicable bilateral agreement. Pursuant to this bilateral agreement, Transport Canada has kept the FAA informed of the situation described above. The FAA has examined the findings of Transport Canada, reviewed all available information, and determined that AD action is necessary for products of this type design that are certificated for operation in the United States.

This unsafe condition is likely to exist or develop on other helicopters of the same type design. Therefore, the proposed AD would supersede AD 2000–06–10 to contain the same requirements but would increase the areas of inspection for the tailbooms and would reduce the applicability to restrict the inspections to certain tailbooms. Installing a redesigned tailboom, P/N 407–030–801–201, would constitute terminating action for the requirements of this AD. An owner/operator (pilot) holding at least a private pilot certificate may perform the visual check required by paragraph (a) of this AD but must enter compliance with that paragraph into the helicopter records in accordance with 14 CFR 43.11 and 91.417(a)(2)(v). A pilot can perform this check because it involves only a visual check for a crack in the tailboom and is a part of a normal pilot preflight check.

The FAA estimates that 200 helicopters of U.S. registry would be affected by this proposed AD, that it would take approximately 5 hours for initial and recurring inspections per helicopter, and that the average labor rate is $60 per work hour. Based on these figures, the total cost impact of the proposed AD on U.S. operators is estimated to be $60,000 assuming no tailboom will be replaced.

The regulations proposed herein would not have a substantial direct effect on the States, on the relationship between the national Government and the States, or on the distribution of power and responsibilities among the various levels of government. Therefore, it is determined that this proposal would not have federalism implications under Executive Order 13132.

For the reasons discussed above, I certify that this proposed regulation (1) is not a ''significant regulatory action'' under Executive Order 12866; (2) is not a ''significant rule'' under the DOT Regulatory Policies and Procedures (44 FR 11034, February 26, 1979); and (3) if promulgated, will not have a significant economic impact, positive or negative, on a substantial number of small entities under the criteria of the Regulatory Flexibility Act. A copy of the draft regulatory evaluation prepared for this action is contained in the Rules Docket. A copy of it may be obtained by contacting the Rules Docket at the location provided under the caption **ADDRESSES.**

List of Subjects in 14 CFR Part 39

Air transportation, Aircraft, Aviation safety, Safety.

The Proposed Amendment

Accordingly, pursuant to the authority delegated to me by the Administrator, the Federal Aviation Administration proposes to amend part 39 of the Federal Aviation Regulations (14 CFR part 39) as follows:

PART 39—AIRWORTHINESS DIRECTIVES

1. The authority citation for part 39 continues to read as follows:

Authority: 49 U.S.C. 106(g), 40113, 44701.

§ 39.13 [Amended]

2. Section 39.13 is amended by removing Amendment 39–11651 (65 FR 16804, March 30, 2000), and by adding a new airworthiness directive (AD), to read as follows:

Bell Helicopter Textron Canada: Docket No. 2001–SW–53–AD. Supersedes AD 2000–06–10, Amendment 39–11651, Docket No. 99–SW–75–AD.

Applicability: Model 407 helicopters, serial number (S/N) 53000 through 53475 with tailboom, part number (P/N) 407–030–801–101, –105, or –107, installed, certificated in any category.

Note 1: This AD applies to each helicopter identified in the preceding applicability

provision, regardless of whether it has been otherwise modified, altered, or repaired in the area subject to the requirements of this AD. For helicopters that have been modified, altered, or repaired so that the performance of the requirements of this AD is affected, the owner/operator must request approval for an alternative method of compliance in accordance with paragraph (d) of this AD. The request should include an assessment of the effect of the modification, alteration, or repair on the unsafe condition addressed by this AD; and if the unsafe condition has not been eliminated, the request should include specific proposed actions to address it.

Compliance: Required as indicated, unless accomplished previously.

To prevent separation of the tailboom and subsequent loss of control of the helicopter, accomplish the following:

(a) Before further flight and thereafter before the first flight of each day, check the tailboom for a crack in accordance with Figure 1 of this AD. If a crack is found, remove the tailboom before further flight. An owner/operator (pilot) holding at least a private pilot certificate may perform the visual check required by this paragraph but must enter compliance with this paragraph into the helicopter records in accordance with 14 CFR 43.11 and 91.417(a)(2)(v). A pilot can perform this check because it involves only a visual check for a crack in the tailboom and is a part of a normal pilot preflight check.

BILLING CODE 4910–13–U

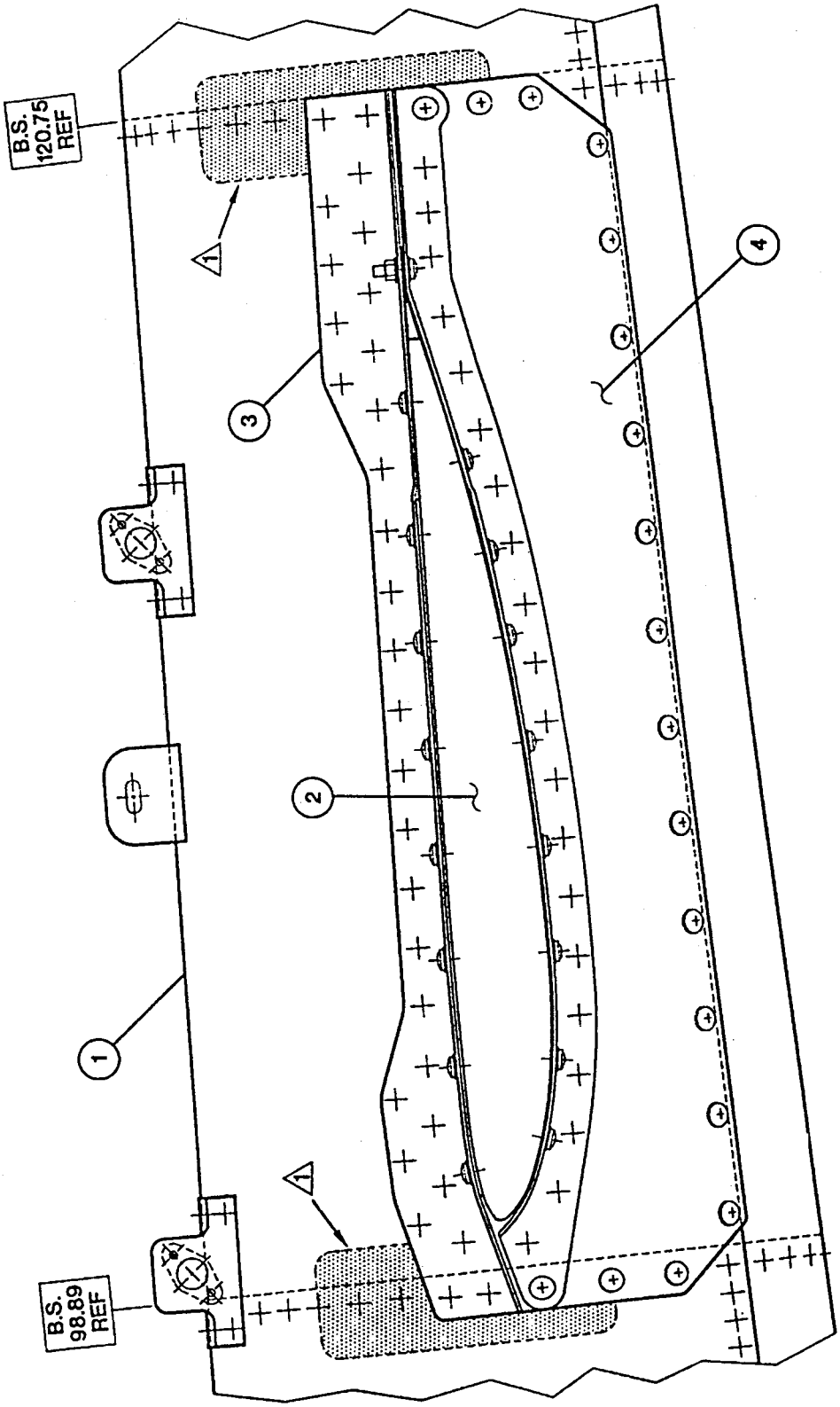

LEGEND

1. Tailboom assembly (Ref.)
2. Horizontal stabilizer (Ref.)
3. Upper support (Ref.)
4. Lower support (407-023-800-121)

NOTES

1. Examine these areas for cracks on left side of tailboom only.
2. Horizontal stabilizer not shown for clarity.

Figure 1. Preflight Check of the Tailboom

BILLING CODE 4910–13–C

(b) Within 25 hours time-in-service (TIS) and thereafter at intervals not to exceed 50 hours TIS, visually inspect any tailboom with 600 or more hours TIS for a crack using a 10x or higher magnifying glass in accordance with the Accomplishment Instructions, Part II, of Bell Helicopter Textron Alert Service Bulletin ASB 407–99–26, Revision B, dated June 14, 2001, except you are not required to contact Bell Helicopter Product Support Engineering. If a crack is found, remove the tailboom before further flight.

(c) Installing a tailboom, P/N 407–030–801–201, is terminating action for the requirements of this AD.

(d) An alternative method of compliance or adjustment of the compliance time that provides an acceptable level of safety may be used if approved by the Manager, Regulations Group, Rotorcraft Directorate, FAA. Operators shall submit their requests through an FAA Principal Maintenance Inspector, who may concur or comment and then send it to the Manager, Regulations Group.

Note 2: Information concerning the existence of approved alternative methods of compliance with this AD, if any, may be obtained from the Regulations Group.

(e) Special flight permits may be issued in accordance with 14 CFR 21.197 and 21.199 to operate the helicopter to a location where the requirements of this AD can be accomplished.

Note 3: The subject of this AD is addressed in Transport Canada AD CF–1999–17R1, dated July 24, 2001.

Issued in Fort Worth, Texas, on January 17, 2002.

David A. Downey,

Manager, Rotorcraft Directorate, Aircraft Certification Service.

[FR Doc. 02–2427 Filed 1–30–02; 8:45 am]

BILLING CODE 4910–13–U

DEPARTMENT OF THE INTERIOR

Office of Surface Mining Reclamation and Enforcement

30 CFR Part 948

[WV–095–FOR]

West Virginia Regulatory Program

AGENCY: Office of Surface Mining Reclamation and Enforcement, Interior.

ACTION: Proposed rule; public comment period and opportunity for public hearing.

SUMMARY: We, the Office of Surface Mining Reclamation and Enforcement (OSM) are announcing receipt of an amendment to the West Virginia surface mining regulatory program (the West Virginia program) under the Surface Mining Control and Reclamation Act of 1977 (SMCRA or the Act). West Virginia proposes revisions to the Code of State Regulations (CSR) and to the Code of West Virginia (W. Va. Code) as contained in Enrolled Senate Bill 689. The amendment is intended to revise the State's Surface Mine Blasting Rule and to amend the W. Va. Code concerning preblast survey requirements, site specific blasting design requirements, and liability and civil penalties in the event of property damage.

This document gives the times and locations that the West Virginia program and proposed amendment to that program are available for your inspection, the comment period during which you may submit written comments on the amendment, and the procedures that we will follow for the public hearing, if one is requested.

DATES: We will accept written comments until 4:30 p.m. (local time), on March 4, 2002. If requested, we will hold a public hearing on the amendment on February 25, 2002. We will accept requests to speak at the hearing until 4:30 p.m. (local time), on February 15, 2002.

ADDRESSES: You may mail or hand-deliver written comments and requests to speak at the hearing to Mr. Roger W. Calhoun, Director, Charleston Field Office at the address listed below.

You may review copies of the West Virginia program, this amendment, a listing of any scheduled public hearings, and all written comments received in response to this document at the addresses listed below during normal business hours, Monday through Friday, excluding holidays. You may receive one free copy of the amendment by contacting OSM's Charleston Field Office.

Mr. Roger W. Calhoun, Director, Charleston Field Office, Office of Surface Mining Reclamation and Enforcement, 1027 Virginia Street, East, Charleston, West Virginia 25301, Telephone: (304) 347–7158.

West Virginia Department of Environmental Protection, 10 McJunkin Road, Nitro, West Virginia 25143, Telephone: (304) 759–0510. The proposed amendment will be posted at the Division of Mining and Reclamation's Internet web page: http://www.dep.state.wv.us/mr.

In addition, you may review copies of the proposed amendment during regular business hours at the following locations:

Office of Surface Mining Reclamation and Enforcement, Morgantown Area Office, 75 High Street, Room 229, P.O. Box 886, Morgantown, West Virginia 26507, Telephone: (304) 291–4004. (By Appointment Only)

Office of Surface Mining Reclamation and Enforcement, Beckley Area Office, 313 Harper Park Drive, Suite 3, Beckley, West Virginia 25801, Telephone: (304) 255–5265.

FOR FURTHER INFORMATION CONTACT: Mr. Roger W. Calhoun, Director, Charleston Field Office; Telephone: (304) 347–7158.

SUPPLEMENTARY INFORMATION:

I. Background on the West Virginia Program
II. Description of the Proposed Amendment
III. Public Comment Procedures
IV. Procedural Determinations

I. Background on the West Virginia Program

Section 503(a) of the Act permits a State to assume primacy for the regulation of surface coal mining and reclamation operations on non-Federal and non-Indian lands within its borders by demonstrating that its program includes, among other things, ''* * * a State law which provides for the regulation of surface coal mining and reclamation operations in accordance with the requirements of the Act * * *; and rules and regulations consistent with regulations issued by the Secretary pursuant to the Act.'' See 30 U.S.C. 1253(a)(1) and (7). On the basis of these criteria, the Secretary of the Interior conditionally approved the West Virginia program on January 21, 1981. You can find background information on the West Virginia program, including the Secretary's findings, the disposition of comments, and conditions of approval of the West Virginia program in the January 21, 1981, **Federal Register** (46 FR 5915). You can also find later actions concerning West Virginia's program and program amendments at 30 CFR 948.10, 948.12, 948.13, 948.15, and 948.16.

II. Description of the Proposed Amendment

By letter dated November 28, 2001 (Administrative Record Number WV–1258), the WVDEP sent us a proposed amendment to its program under SMCRA (30 U.S.C. 1201 *et seq.*). The proposed amendment consists of changes to the W. Va. Code as contained in Enrolled Senate Bill 689 concerning blasting. The amendment also revises the provisions of the Surface Mine Blasting Rule at CSR 199–1. The full text of the program amendment is available for you to read at the locations listed above under **ADDRESSES.** We are also making available for public review and comment Engrossed Senate Bill 689 because it clearly shows, via underline and strikethrough, all the statutory language that has been added or deleted from the W. Va. Code as a result of Senate Bill 689. Engrossed Senate Bill

689 is substantively identical to Enrolled Senate Bill 689. Senate Bill 689 amends preblast survey requirements, site specific blasting design requirements, and provisions concerning liability and civil penalties in the event of property damage. The statutory revisions in Senate Bill 689 are also intended to address the required program amendments codified at 30 CFR 948.16(kkkk), (llll), and (mmmm).

By letter dated October 30, 2000 (Administrative Record Number WV–1187), the WVDEP submitted an amendment that added to the State regulations new Title 199, Series 1, entitled Surface Mine Blasting Rule. The regulations consisted of new blasting provisions and blasting provisions that were relocated or derived from previously approved West Virginia blasting provisions. We announced receipt of the amendment on December 5, 2000 (65 FR 75889) (Administrative Record Number WV–1190), but we have not yet published our decision on the amendment. The blasting rule submitted on October 30, 2000, and not yet approved by us, is the blasting rule that is being modified by the amendments to CSR 199–1 that we are announcing today. When we render our final decision on the amendment that we are announcing today, we will combine that decision with our decision on the blasting rule amendment that was submitted to us on October 30, 2000.

The amendment that we are announcing today is identified below.

1. W. Va. Code 22–3 Surface Coal Mining and Reclamation Act

22–3–13a Preblast survey requirements

22–3–13a(a)(3) is new, and concerns preblast survey notification for surface disturbance of underground mines.

22–3–13a(b) concerning operator notification of owners and occupants of dwellings or structures is amended.

22–3–13a(f)(14) concerning contents of a preblast survey is amended.

22–3–13a(g) concerning the submittal of preblast surveys to the office of explosives and blasting is amended.

22–3–13a(j) concerning applicability of the section 22–3–13a is amended.

22–3–22a Blasting restrictions; site specific blasting design requirement

22–3–22a(e) concerning blasting within 1000 feet of a protected structure is amended.

22–3–22a(f) concerning waiver of the blasting prohibition within 300 feet of a protected structure is amended.

22–3–30a Blasting requirements; liability and civil penalties in the event of property damage

22–3–30a(a) concerning blasting being conducted in accordance with the rules and laws established to regulate blasting is amended.

22–3–30a(b) concerning penalties where blasting was out of compliance is amended.

22–3–30a(c) concerning violation of rules that are merely administrative in nature is amended.

22–3–30a(e) concerning the penalties for production blasting conducted in violation of 22–3–22a is amended.

22–3–30a(f) concerning assessment of penalties and liabilities by the director is amended.

22–3–30a(h) concerning the applicability of section 22–3–30a is amended.

2. CSR 199–1 Surface Mining Blasting Rule

CSR 199–1–2 Definitions

199–1–2.1. The definition of Active Blasting Experience is amended.

199–1–2.4. The definition of Arbitrator is amended.

199–1–2.8. The definition of Blast Site is amended.

199–1–2.21. The definition of Contiguous or Nearly Contiguous is added.

199–1–2.26. The definition of Fly Rock is amended.

199–1–2.24. The definition of Loss Reserve is deleted.

199–1–2.37. The definition of Worked on a Drilling Crew is deleted.

199–1–2.39. The definition of Worked on a Blasting Crew is deleted.

CSR 199–1–3 Blasting

199–1–3.2. concerning blasting plans is amended at subdivisions 3.2.a., c., and d.

199–1–3.3. concerning public notice of blasting operations is amended.

199–1–3.4. concerning surface blasting activities incident to underground coal mining is amended.

199–1–3.5.c.1. concerning blast record, blasting log is amended.

199–1–3.6. concerning blasting procedures is amended.

199–1–3.7. concerning blasting control for other structures is amended.

199–1–3.8. concerning certified blasting personnel is deleted, and in its place new 199–1–3.8 concerning pre-blast surveys is added.

199–1–3.9. The title of this subsection is changed from Pre-blast Survey, to Pre-blast Surveyors. Amendments are also made to this subsection concerning the qualifications and compliance requirements of pre-blast surveyors.

199–1–3.10.d. concerning pre-blast survey review, confidentiality, is amended.

199–1–3.11. is added to provide that the director may prohibit blasting or prescribe alternative blasting limits, on a case-by-case basis, for the protection of property or the public.

CSR 199–1–4 Certification of Blasters

199–1–4.1.a., b., and c. concerning requirements, qualifications, and application for certification are amended.

199–1–4.2. concerning training is amended.

199–1–4.3. concerning the examination for certification of Examiner/Inspector and Certified Blaster is amended.

199–1–4.5. concerning conditions or practices prohibiting certification of blasters is amended.

199–1–4.6. concerning re-certification requirements for certified blasters is amended.

199–1–4.7. concerning presentation of certificate; transfer; and delegation of authority is amended at subdivision 4.7.d.

199–1–4.8. concerning violations by a certified blaster is amended.

199–1–4.9. concerning penalties is amended.

199–1–4.10. concerning hearings and appeals is amended.

CSR 199–1–5 Blasting Damage Claim

199–1–5.2. concerning filing a claim is amended.

199–1–5.3. concerning the responsibilities of the claims administrator is amended.

199–1–5.4. concerning the responsibilities of the claims adjuster is amended.

CSR 199–1–6 Arbitration for Blasting Damage Claims

199–1–6.1. concerning listing of arbitrators is amended.

199–1–6.2. concerning selection of arbitrator is amended.

199–1–6.4. concerning demand for arbitration and timeframes for arbitration is amended.

199–1–6.7. concerning presentations to the arbitrator is amended.

199–1–6.8. concerning arbitration award, fees, costs and expenses is amended.

CSR 199–1–7 Explosive Material Fee

199–1–7.2. concerning remittance fee is amended.

199–1–7.3. concerning dedication of the fee is amended.

199–1–7.7. concerning noncompliance is amended.

CSR 199–1–8 Inspections

199–1–8. This section is new and concerns inspections of any prospecting, active surface mining operation, or inactive surface mining operation.

CSR 199–1–9 Surface Mine Board

199–1–9. This section is new and concerns open meetings, appeals, and ex parte communications.

III. Public Comment Procedures

Under the provisions of 30 CFR 732.17(h), we are seeking your comments on whether the amendment satisfies the applicable program approval criteria of 30 CFR 732.15. If we approve the amendment, it will become part of the State program.

Written Comments

Send your written comments to OSM at the address given above. Your written comments should be specific, pertain only to the issues proposed in this rulemaking, and include explanations in support of your recommendation(s). We will not consider or respond to your comments when developing the final rule if they are received after the close of the comment period (*see* **DATES**). We will make every attempt to log all comments into the administrative record, but comments delivered to an address other than the Charleston Field Office may not be logged in.

Availability of Comments

We will make comments, including names and addresses of respondents, available for public review during our normal business hours. We will not consider anonymous comments. If individual respondents request confidentiality, we will honor their request to the extent allowable by law. Individual respondents who wish to withhold their names or address from public review, except for the city or town, must state this prominently at the beginning of their comments. We will make all submissions from organizations or businesses, and from individuals identifying themselves as representatives or officials of organizations or businesses, available for public inspection in their entirety.

Public Hearing

If you wish to speak at the public hearing, contact the person listed under **FOR FURTHER INFORMATION CONTACT** by 4:30 p.m. (local time), on February 15, 2002. If you are disabled and need special accommodations to attend a public hearing, contact the person listed under **FOR FURTHER INFORMATION CONTACT.** We will arrange the location and time of the hearing with those persons requesting the hearing. If no one requests an opportunity to speak, we will not hold a hearing.

To assist the transcriber and ensure an accurate record, we request, if possible, that each person who speaks at a public hearing provide us with a written copy of his or her comments. The public hearing will continue on the specified date until everyone scheduled to speak has been given an opportunity to be heard. If you are in the audience and have not been scheduled to speak and wish to do so, you will be allowed to speak after those who have been scheduled. We will end the hearing after everyone scheduled to speak and others present in the audience who wish to speak, have been heard.

Public Meeting

If only one person requests an opportunity to speak, we may hold a public meeting rather than a public hearing. If you wish to meet with us to discuss the amendment, please request a meeting by contacting the person listed under **FOR FURTHER INFORMATION CONTACT.** All such meetings are open to the public and, if possible, we will post notices of the meetings at the locations listed under **ADDRESSES.** We will make a written summary of each meeting a part of the Administrative Record.

IV. Procedural Determinations

Executive Order 12630—Takings

This rule does not have takings implications. This determination is based on the analysis performed for the counterpart Federal regulations.

Executive Order 12866—Regulatory Planning and Review

This rule is exempt from review by the Office of Management and Budget (OMB) under Executive Order 12866.

Executive Order 12988—Civil Justice Reform

The Department of the Interior has conducted the reviews required by section 3 of Executive Order 12988 and has determined that, to the extent allowable by law, this rule meets the applicable standards of subsections (a) and (b) of that section. However, these standards are not applicable to the actual language of State regulatory programs and program amendments because each such program is drafted and promulgated by a specific State, not by OSM. Under sections 503 and 505 of SMCRA (30 U.S.C. 1253 and 1255) and the Federal regulations at 30 CFR 730.11, 732.15, and 732.17(h)(10), decisions on proposed State regulatory programs and program amendments submitted by the States must be based solely on a determination of whether the submittal is consistent with SMCRA and its implementing Federal regulations and whether the other requirements of 30 CFR Parts 730, 731, and 732 have been met.

Executive Order 13132—Federalism

This rule does not have Federalism implications. SMCRA delineates the roles of the Federal and State governments with regard to the regulation of surface coal mining and reclamation operations. One of the purposes of SMCRA is to ''establish a nationwide program to protect society and the environment from the adverse effects of surface coal mining operations.'' Section 503(a)(1) of SMCRA requires that State laws regulating surface coal mining and reclamation operations be ''in accordance with'' the requirements of SMCRA. Section 503(a)(7) requires that State programs contain rules and regulations ''consistent with'' regulations issued by the Secretary pursuant to SMCRA.

Executive Order 13211—Regulations That Significantly Affect the Supply, Distribution, or Use of Energy

On May 18, 2001, the President issued Executive Order 13211 which requires agencies to prepare a Statement of Energy Effects for a rule that is (1) considered significant under Executive Order 12866, and (2) likely to have a significant adverse affect on the supply, distribution, or use of energy. Because this rule is exempt from review under Executive Order 12866 and is not expected to have a significant adverse effect on the supply, distribution, or use of energy, a Statement of Energy Effects is not required.

National Environmental Policy Act

Section 702(d) of SMCRA (30 U.S.C. 1292(d)) provides that a decision on a proposed State regulatory program provision does not constitute a major Federal action within the meaning of section 102(2)(C) of the National Environmental Policy Act (NEPA) (42 U.S.C. 4332(2)(C)). A determination has been made that such decisions are categorically excluded from the NEPA process (516 DM 8.4.A).

Paperwork Reduction Act

This rule does not contain information collection requirements that require approval by the OMB under the Paperwork Reduction Act (44 U.S.C. 3507 *et seq.*).

Regulatory Flexibility Act

The Department of the Interior has determined that this rule will not have a significant economic impact on a substantial number of small entities under the Regulatory Flexibility Act (5 U.S.C. 601 *et seq.*). The State submittal which is the subject of this rule is based upon counterpart Federal regulations for which an economic analysis was prepared and certification made that such regulations would not have a significant economic effect upon a substantial number of small entities. Accordingly, this rule will ensure that existing requirements previously promulgated by OSM will be implemented by the State. In making the determination as to whether this rule would have a significant economic impact, the Department relied upon the data and assumptions for the counterpart Federal regulation.

Small Business Regulatory Enforcement Fairness Act

This rule is not a major rule under 5 U.S.C. 804(2), the Small Business Regulatory Enforcement Fairness Act. This rule: (a) Does not have an annual effect on the economy of $100 million; (b) Will not cause a major increase in costs or prices for consumers, individual industries, geographic regions or Federal, State, or local government agencies; and (c) Does not have significant adverse effects on competition, employment, investment, productivity, innovation, or the ability of U.S.-based enterprises to compete with foreign-based enterprises.

This determination is based upon the fact that the State submittal which is the subject of this rule is based upon counterpart Federal regulations for which an analysis was prepared and a determination made that the Federal regulation was not considered a major rule.

Unfunded Mandates

This rule will not impose a cost of $100 million or more in any given year on any governmental entity or the private sector.

List of Subjects in 30 CFR Part 948

Intergovernmental relations, Surface mining, Underground mining.

Dated: January 9, 2002.

Allen D. Klein,

Regional Director, Appalachian Regional Coordinating Center.

[FR Doc. 02–2415 Filed 1–30–02; 8:45 am]

BILLING CODE 4310–05–P

DEPARTMENT OF TRANSPORTATION

Coast Guard

33 CFR Part 165

[COTP Western Alaska 02–003]

RIN 2115–AA97

Safety Zone; Ouzinkie Harbor, Ouzinkie, AK

AGENCY: Coast Guard, DOT.

ACTION: Notice of proposed rulemaking.

SUMMARY: The Coast Guard proposes to establish two temporary safety zones in Ouzinkie Harbor, Ouzinkie, Alaska. One safety zone would surround the barge SWINIMOSH which will be conducting dredging and blasting operations in the navigable waters of Ouzinkie Harbor. The second safety zone would close all of Ouzinkie Harbor when the barge SWINIMOSH conducts blasting operations. These safety zones are necessary to protect vessels transiting the area from the potential hazards associated with the dredging and blasting operations conducted by the barge SWINIMOSH.

DATES: Comments must be received on or before February 21, 2002. While our proposed rule may change based on comments received, we plan to make our final rule effective starting March 1, 2002.

ADDRESSES: You may mail comments and related material to Coast Guard Marine Safety Office, 510 L Street, Suite 100, Anchorage, AK 99501. Coast Guard Marine Safety Office Anchorage maintains the public docket for this rulemaking. Comments and material received from the public, as well as documents indicated in this preamble as being available in the docket, will become part of this docket and will be available for inspection or copying at Coast Guard Marine Safety Office Anchorage between 7:30 a.m. and 4 p.m., Monday through Friday, except Federal holidays.

FOR FURTHER INFORMATION CONTACT: Lieutenant Matt Jones, USCG Marine Safety Detachment Kodiak, at (907) 486–5918 or Lieutenant Commander Chris Woodley, USCG Marine Safety Office Anchorage, at (907) 271–6700.

SUPPLEMENTARY INFORMATION:

Request for Comments

We encourage you to participate in this rulemaking by submitting comments and related material. If you do so, please include your name and address, identify the docket number for this rulemaking (COTP Western Alaska 02–003), indicate the specific section of this document to which each comment applies, and give the reason for each comment. Please submit all comments and related material in an unbound format, no larger than 8½ by 11 inches, suitable for copying. If you would like to know they reached us, please enclose a stamped, self-addressed postcard or envelope. We will consider all comments and material received during the comment period. We may change this proposed rule in view of them.

Public Meeting

We do not now plan to hold a public meeting. But you may submit a request for a meeting by writing to Coast Guard Marine Safety Office Anchorage at the address under **ADDRESSES** explaining why one would be beneficial. If we determine that one would aid this rulemaking, we will hold one at a time and place announced by a later notice in the **Federal Register**.

Background and Purpose

The U.S. Army Corps of Engineers, through its contractor Western Marine Construction, Inc., will be conducting dredging and blasting operations on portions of Ouzinkie Harbor (Army Corps of Engineers project number DACW85–01–C–0010). This dredging project will help maintain safe navigation within Ouzinkie Harbor. A 500-yard safety zone around the barge SWINIMOSH and a safety zone closing the harbor during blasting operations is necessary to ensure the safety of the maritime community from the potential hazards associated with dredging and blasting operations.

Because we received the request late, we find that good cause exists, under 5 U.S.C. 553(d)(3), for making this rule effective less than 30 days after publication in the **Federal Register**. We have limited the comment period to 21 days so that the final rule can go into effect on March 1, 2002 in order to meet our obligation to protect the maritime community.

Discussion of Proposed Rule

The proposed safety zones would include the navigable waters of Ouzinkie Harbor within a 500-yard radius of the barge SWINIMOSH in Ouzinkie, AK, Lat. 57°55′10″ N, Long. 152°29′45″ W, and all waters of Ouzinkie Harbor, shoreline of a line drawn from 57°54′58″ N, 152°29′35″ W to 57°55′04″ N, 152°30′00″ W and ending at 57°55′12″ N, 152°30′10″ W when blasting operations occur. The blasting operations could occur any time during daylight hours starting March 1, 2002 through April 15, 2002.

These proposed safety zones are necessary to protect the maritime community from the hazards of the dredging and blasting operations. The Coast Guard will announce via broadcast notice to mariners when the blasting operations will occur. Vessels must contact the tug WALDO immediately upon entering and before transiting Ouzinkie Harbor.

Regulatory Evaluation

This proposed rule is not a ''significant regulatory action'' under section 3(f) of Executive Order 12886, Regulatory Planning and Review, and does not require an assessment of potential costs and benefits under section 6(a)(3) of that Order. The Office of Management and Budget has not reviewed it under that Order. It is not ''significant'' under the regulatory policies and procedures of the Department of Transportation (DOT) (44 FR 11040, February 26, 1979).

We expect the economic impact of this rule to be so minimal that a full Regulatory Evaluation under paragraph 10(e) of the regulatory policies and procedures of DOT is unnecessary. This finding is based on the fact that the safety zone around the barge SWINIMOSH will not restrict vessels from transiting through the harbor. Also, the safety zone closing Ouzinkie Harbor during blasting operations will be well announced so as to allow vessels ample time to plan ahead and the actual blasting operations will be short in duration. The areas will not affect maritime vessel traffic transiting the shipping channel at Ouzinkie Narrows. Vessel traffic at this time of the year is minimal.

Small Entities

Under the Regulatory Flexibility Act (5 U.S.C. 601–612), we have considered whether this proposed rule would have a significant economic impact on a substantial number of small entities. The term ''small entities'' comprises small businesses, not-for-profit organizations that are independently owned and operated and are not dominant in their fields, and governmental jurisdictions with populations of less than 50,000.

The Coast Guard certifies under 5 U.S.C. 605(b) that this proposed rule will not have a significant economic impact on a substantial number of small entities.

This proposed rule will affect the following entities, some of which may be small entities: The owners or operators of vessels intending to transit or anchor in the vicinity of Ouzinkie Harbor during the time this zone is activated.

These safety zones would not have a significant economic impact on a substantial number of small entities for the following reasons. The safety zone area around the barge SWINIMOSH will not restrict vessels from transiting Ouzinkie Harbor and vessels could pass safely around it. Also, the safety zone closing Ouzinkie Harbor during blasting operations will be well announced so as to allow vessels ample time to plan ahead and the actual blasting operations will be short in duration. Limited vessel traffic occurs in this area during these months. Before and during the effective period, we would issue a broadcast notice to mariners to warn maritime vessel traffic of the safety zones and operations occurring within the safety zone.

If you think that your business, organization, or governmental jurisdiction qualifies as a small entity and that this rule would have a significant economic impact on it, please submit a comment (*see* **ADDRESSES**) explaining why you think it qualifies and how and to what degree this rule would economically affect it.

Collection of Information

This proposed rule calls for no new collection of information under the Paperwork Reduction Act of 1995 (44 U.S.C. 3501–3520).

Federalism

A rule has implications for federalism under Executive Order 13132, Federalism, if it has a substantial direct effect on State or local governments and would either preempt State law or impose a substantial direct cost of compliance on them. We have analyzed this proposed rule under that Order and have determined that it does not have implications for federalism.

Unfunded Mandates Reform Act

The Unfunded Mandates Reform Act of 1995 (2 U.S.C. 1531–1538) requires Federal agencies to assess the effects of their discretionary regulatory actions. In particular, the Act addresses actions that may result in the expenditure by a State, local, or tribal government, in the aggregate, or by the private sector of $100,000,000 or more in any one year. Though this proposed rule will not result in such an expenditure, we do discuss the effects of this rule elsewhere in this preamble.

Taking of Private Property

This proposed rule will not effect a taking of private property or otherwise have taking implications under Executive Order 12630, Governmental Actions and Interference with Constitutionally Protected Property Rights.

Civil Justice Reform

This proposed rule meets applicable standards in sections 3(a) and 3(b)(2) of Executive Order 12988, Civil Justice Reform, to minimize litigation, eliminate ambiguity, and reduce burden.

Protection of Children

We have analyzed this proposed rule under Executive Order 13045, Protection of Children from Environmental Health Risks and Safety Risks. This rule is not an economically significant rule and does not create an environmental risk to health or risk to safety that may disproportionately affect children.

Consultation and Coordination With Indian Tribal Governments

This proposed rule does not have tribal implications under Executive Order 13175, Consultation and Coordination with Indian Tribal Governments, because it does not have a substantial direct effect on one or more Indian tribes, on the relationship between the Federal Government and Indian tribes, or on the distribution of power and responsibilities between the Federal Government and Indian tribes.

To help the Coast Guard establish regular and meaningful consultation and collaboration with Indian and Alaskan Native tribes, we published a notice in the **Federal Register** (66 FR 36361, July 11, 2001) requesting comments on how to best carry out the Order. We invite your comments on how this proposed rule might impact tribal governments, even if that impact may not constitute a ''tribal implication'' under the Order.

Energy Effects

We have analyzed this proposed rule under Executive Order 13211, Actions Concerning Regulations That Significantly Affect Energy Supply, Distribution, or Use. We have determined that it is not a ''significant energy action'' under that order because it is not a ''significant regulatory action'' under Executive Order 12866 and is not likely to have a significant adverse effect on the supply, distribution, or use of energy. It has not been designated by the Administrator of the Office of Information and Regulatory Affairs as a significant energy action. Therefore, it does not require a Statement of Energy Effects under Executive Order 13211.

Environment

We have considered the environmental impact of this rule and concluded that under figure 2–1, paragraph 34(g), of Commandant Instruction M16475.1D, this proposed rule is categorically excluded from further environmental documentation. This rule fits paragraph 34(g) as it establishes a safety zone. A ''Categorical Exclusion Determination'' is available in the docket for inspection or copying where indicated under **ADDRESSES.**

List of Subjects in 33 CFR Part 165

Harbors, Marine safety, Navigation (water), Reporting and recordkeeping requirements, Security measures, Waterways.

For the reasons discussed in the preamble, the Coast Guard proposes to amend 33 CFR part 165 as follows:

PART 165—REGULATED NAVIGATION AREAS AND LIMITED ACCESS AREAS

1. The authority citation for part 165 continues to read as follows:

Authority: 33 U.S.C. 1231; 50 U.S.C. 191, 33 CFR 1.05–1(g), 6.04–1, 6.04–6, 160.5; 49 CFR 1.46.

2. Add § 165.T17–002 to read as follows:

§ 165.T17–002 Safety Zone; Ouzinkie Harbor Dredging and Blasting Operations, Ouzinkie, Alaska.

(a) *Location*. The following areas are temporary safety zones: (1) *SWINIMOSH Barge safety zone*: All navigable waters in Ouzinkie Harbor within a 500-yard radius of the barge SWINIMOSH while it is engaged in dredging and blasting operations.

(2) *Ouzinkie Harbor safety zone*: All waters in Ouzinkie Harbor, excluding the SWINIMOSH Barge safety zone, shoreward from a line drawn from 57°54′58″ N, 152°29′35″ W to 57°55′04″ N, 152°30′00″ W and ending at 57°55′12″ N, 152°30′10″ W.

(b) *Effective period*. This section is effective from 12:01 a.m. March 1, 2002, until 9 p.m. April 15, 2002. During this effective period, blasting operations will occur in daylight hours only.

(c) *Regulations*.

(1) The general regulations contained in § 165.23 apply. The attending tug WALDO will be standing by on channels 16 and 13 to provide traffic advisories. All vessels must have permission of the Captain of the Port to enter the safety zones defined in this section. Vessels in the Ouzinkie Harbor safety zone must contact the tug WALDO before transiting Ouzinkie Harbor to determine if blasting is scheduled. If it is scheduled, no transiting in either safety zone is permitted unless authorized by the Captain of the Port.

Dated: January 16, 2002.

H.M. Hamilton,

Commander, U.S. Coast Guard, Alternate Captain of the Port, Western Alaska.

[FR Doc. 02–2276 Filed 1–30–02; 8:45 am]

BILLING CODE 4910–15–P

LIBRARY OF CONGRESS

Copyright Office

37 CFR Part 255

[Docket No. RM 2000–7B]

Mechanical and Digital Phonorecord Delivery Compulsory License

AGENCY: Copyright Office, Library of Congress.

ACTION: Extension of comment period.

SUMMARY: The Copyright Office of the Library of Congress is extending the time period for filing additional comments on its Notice of Inquiry concerning the interpretation and application of the copyright laws to certain kinds of digital transmissions of prerecorded musical works in light of an agreement between the Recording Industry Association of America, Inc., the National Music Publishers Association, and The Harry Fox Agency. The due date for reply comments remains unchanged.

DATES: Comments are due no later than February 6, 2002. Reply comments are due February 27, 2002.

ADDRESSES: If sent by mail, an original and ten copies of the reply comments should be addressed to: Copyright Arbitration Royalty Panel (CARP), P.O. Box 70977, Southwest Station, Washington, D.C. 20024. If hand delivered, the reply comments, they should be brought to: Office of the General Counsel, James Madison Building, Room LM–403, First and Independence Ave., SE, Washington, D.C. 20559–6000.

FOR FURTHER INFORMATION CONTACT: David O. Carson, General Counsel, or Tanya M. Sandros, Attorney Advisor, Copyright GC/I&R, P.O. Box 70400, Southwest Station, Washington, D.C. 20024. Telephone: (202) 707–8380. Telefax: (202) 707–8366.

SUPPLEMENTARY INFORMATION:

Background

On March 9, 2001, the Copyright Office published a Notice of Inquiry in which it requested comments on the interpretation and application of the copyright law to certain kinds of digital transmissions of musical works. 66 FR 14099 (March 9, 2001). Subsequently, the Recording Industry of America, Inc. (''RIAA''), the National Music Publishers Association (''NMPA'') and The Harry Fox Agency (''HFA'') negotiated a private agreement which addressed the application of the mechanical compulsory license, as set forth in the Copyright Act, 17 U.S.C. 115, to two specific types of services discussed in the initial Notice of Inquiry and filed the agreement with the Copyright Office as part of this proceeding.

On December 14, 2001, the Copyright Office published a request for additional comments on its March 9 Notice of Inquiry in light of the RIAA/NMPA/HFA agreement (67 FR 64783). On January 28, 2002, the date comments were due, RIAA and NMPA filed a joint request for more time to fill the requested comments. These parties stated that at the last moment they identified questions that had not been fully appreciated or addressed in their respective comments. They expressed concern that failure to address these issues could be misinterpreted and asked for a two week extension to draft more comprehensive comments. Moreover, as the parties to the Agreement that is the subject of the request for additional comments, these parties argue that ''it would benefit the record, any other commenting parties, and the public—and narrow the range of issues to be presented to the Copyright Office—if [they] were afforded an opportunity to address these questions.''

Although it is not uncommon for the Office to grant extensions when a party has made a showing of need, it is reluctant to do so when the request is made on the day of the filing deadline, since it is very disruptive and unfair to those who have met the deadline. However, because NMPA and RIAA are the parties to the agreement that is the subject of the request for additional comments, the Office believes it is important to obtain their comments in the first round. Therefore, the date for filing the requested comments has been extended. Comments are now due no later than Wednesday, February 6, 2002. There shall be no further extension of this deadline. The date for filing reply comments remains unchanged. Reply comments shall be due on Wednesday, February 27, 2002.

Dated: January 29, 2002.

David O. Carson,

General Counsel.

[FR Doc. 02–2503 Filed 1–30–02; 8:45 am]

BILLING CODE 1410–31–P

ENVIRONMENTAL PROTECTION AGENCY

40 CFR Part 52

[OH 103–1b; FRL–7114–2]

Approval and Promulgation of Implementation Plans; Ohio

AGENCY: Environmental Protection Agency (EPA).

ACTION: Proposed rule.

SUMMARY: EPA is proposing to approve portions of Ohio's March 20, 2000, submittal of sulfur dioxide regulations for various counties. In this action, EPA is proposing to approve the revised emission limits of the Ohio Administrative Code (OAC) for sources in Butler County (OAC 3745–18–15). EPA is also proposing to approve the revised emission limits for the Picway Generating Station in Pickaway County (OAC 3745–18–71), and for the Painesville Municipal Plant boiler number 5 in Lake County (OAC 3745–18–49). In addition, EPA is proposing to approve selected parts of the State's rule for compliance schedules (OAC 3745–18–03) and test methods (OAC 3745–18–04), most of which apply to the new sulfur dioxide (SO_2) emission limits in Butler and Pickaway counties. In conjunction with these actions, EPA is proposing to rescind the federally promulgated emission limitations for SO_2 for Butler, Lorain, Coshocton, Gallia, and Lake Counties, since these limits have been superseded by the approved state limits. In the final rules section of this **Federal Register**, the EPA is approving the State's request as a direct final rule without prior proposal because EPA views this action as non-controversial and anticipates no adverse comments. A detailed rationale for approving the State's request is set forth in the direct final rule. The direct final rule will become effective without further notice unless EPA receives relevant adverse written comment. Should EPA receive such comment, it will publish a timely withdrawal of the direct final rule informing the public that the direct final rule will not take effect, and such public comment received will be addressed in a subsequent final rule based on the proposed rule. If no adverse written comments are received, the direct final rule will take effect on the date stated in that document, and no further action will be taken. EPA does not plan to institute a second comment period on this action. Any parties interested in commenting on this action should do so at this time.

DATES: Written comments must be received on or before March 4, 2002.

ADDRESSES: Written comments may be mailed to J. Elmer Bortzer, Chief, Regulation Development Section, Air Programs Branch (AR–18J), Environmental Protection Agency, 77 West Jackson Boulevard, Chicago, Illinois 60604. Copies of the materials submitted by the Ohio Environmental Protection Agency may be examined during normal business hours at the following location: Environmental Protection Agency, Region 5, Air and Radiation Division, 77 West Jackson Boulevard, Chicago, Illinois, 60604.

FOR FURTHER INFORMATION CONTACT: Phuong Nguyen at (312) 886–6701.

SUPPLEMENTARY INFORMATION: For additional information see the direct final rule published in the rules section of this **Federal Register**.

Dated: November 29, 2001.

Christine Todd Whitman,

Administrator.

[FR Doc. 02–2380 Filed 1–30–02; 8:45 am]

BILLING CODE 6560–50–P

DEPARTMENT OF TRANSPORTATION

National Highway Traffic Safety Administration

49 CFR Parts 567 and 568

[Docket No. NHTSA–99–5673]

RIN 2127–AE27

Vehicles Built in Two or More Stages

AGENCY: National Highway Traffic Safety Administration (NHTSA), DOT.

ACTION: Notice of meeting.

SUMMARY: This document announces the date of the final public meeting of the Negotiated Rulemaking Committee on the development of recommended amendments to the existing NHTSA regulations (49 CFR part 567, 568) governing the certification of vehicles built in two or more stages to the Federal motor vehicle safety standards (49 CFR part 571). The Committee was established under the Federal Advisory Committee Act.

DATES: The meeting is scheduled on February 21–22, 2002.

ADDRESSES: The meeting will take place at the offices of the National Truck Equipment Association, 1300 19th Street, NW, Fifth Floor, Washington, DC 20036.

FOR FURTHER INFORMATION CONTACT:

For non-legal issues, you may call Charles Hott, Office of Crashworthiness Standards, at 202–366–4920.

For legal issues, you may call Rebecca MacPherson, Office of the Chief Counsel, at 202–366–2992.

You may send mail to both of these officials at the National Highway Traffic Safety Administration, 400 Seventh Street, SW, Washington, DC, 20590.

SUPPLEMENTARY INFORMATION:

Background

On May 20, 1999, the National Highway Traffic Safety Administration (NHTSA) published a notice of intent to establish an advisory committee (Committee) for a negotiated rulemaking to develop recommendations for regulations governing the certification of vehicles built in two or more stages. The notice requested comment on membership, the interests affected by the rulemaking, the issues that the Committee should address, and the procedures that it should follow. The reader is referred to that notice (64 FR 27499) for further information on these issues.

On December 14–15, 1999, interested parties attended a public meeting in Washington, DC. Since that time, the Advisory Committee has continued to meet, most recently in the Fall of 2000. While most of the issues before the Committee have been tentatively resolved, the issue of manufacturer exemptions remained. NHTSA agreed to not reconvene the Committee until it believed it had developed a solution that would be acceptable to all members of the Committee. This meeting of the Committee is being held to finally resolve that issue so that NHTSA can draft a Notice of Proposed Rulemaking. The meeting will be open to the public so that individuals who are not part of the Committee may attend and observe. Any person attending the Committee meetings may address the Committee, if time permits, or file statements with the Committee.

Authority: 5 U.S.C. sections 561 *et seq.*; delegation of authority at 49 CFR 1.50.

Issued on: January 25, 2002.

Stephen R. Kratzke,

Acting Associate Administrator for Safety Performance Standards.

[FR Doc. 02–2275 1–30–02; 8:45 am]

BILLING CODE 4910–59–P

DEPARTMENT OF COMMERCE

National Oceanic and Atmospheric Administration

50 CFR Part 622

[I.D. 012302E]

Fisheries of the Caribbean, Gulf of Mexico, and South Atlantic; Snapper-Grouper Fishery off the Southern Atlantic States; Amendment 13

AGENCY: National Marine Fisheries Service (NMFS), National Oceanic and Atmospheric Administration (NOAA), U.S. Department of Commerce.

ACTION: Notice of intent to prepare a draft supplemental environmental impact statement (DSEIS); request for comments.

SUMMARY: The South Atlantic Fishery Management Council (Council) intends to prepare a DSEIS to assess the impacts on the natural and human environment of the management measure proposed in its draft Amendment 13 to the Fishery Management Plan for the Snapper-Grouper Fishery of the South Atlantic Region (FMP).

DATES: Written comments on the scope of issues to be addressed in the preliminary DSEIS will be accepted through March 4, 2002.

ADDRESSES: Comments and requests for copies of the DSEIS should be sent to Robert K. Mahood, Executive Director, South Atlantic Fishery Management Council, One Southpark Circle, Suite 306, Charleston, SC 29407–4699, FAX: 843-769–4520; email: robert.mahood@noaa.gov.

FOR FURTHER INFORMATION CONTACT: Kim Iverson, Public Information Office; 843–571–4366 or kim.iverson@noaa.gov.

SUPPLEMENTARY INFORMATION: The snapper grouper fishery off the South Atlantic States in the exclusive economic zone is managed under the FMP. Following Council preparation, the FMP was approved and implemented by NMFS under the authority of the Magnuson-Stevens Fishery Conservation and Management Act (Magnuson-Stevens Act) in March of 1983. Currently, the Council is preparing draft FMP Amendment 13 and a DSEIS as an integrated part of the Amendment. The DSEIS will discuss the proposed Amendment 13 management measures in conjunction with reasonable alternatives. Each alternative will be assessed in relation to the environmental consequences with a no-action alternative considered as one of the options.

In the snapper grouper complex, 12 species are currently overfished, six species are not approaching an overfished condition nor is overfishing occurring, and the status of the remaining species is unknown. Once it is determined that overfishing is occurring, the Magnuson-Stevens Act requires that the Council take action to develop a rebuilding plan. Amendment 13 proposes the establishment of rebuilding timeframes for the overfished species within the snapper-grouper management unit.

To prevent overfishing, the Magnuson-Stevens Act and the subsequent Sustainable Fisheries Act amendments provide national standards that must be satisfied within the FMPs. The National Standards establish parameters, including maximum sustainable yield (MSY), optimum yield (OY), minimum stock size threshold (MSST), and maximum fishing mortality rate threshold (MFMT), which are used to avoid overfished situations. Currently, static spawning potential ratio proxies are used to define MSY, OY, and MFMT. In Amendment 13, the Council intends to establish values for MSY, OY, MFMT, and MSST for each of the species in the snapper-grouper management unit, contingent upon the availability of sufficient scientific information.

Additionally, the Council is considering that the following management measures be included in Amendment 13: commercial permit transfers; adjusting the harvest and/or possession of all species in the deepwater grouper/tilefish fishery; prohibiting all possession and sale of red porgy, greater amberjack, and mutton snapper during spawning season closures for that species; extending the Oculina Experimental Closed Area for an additional time period; removing queen triggerfish from the snapper-grouper management unit; increasing the recreational size limit of greater amberjack; modifying the minimum mesh size regulations for black sea bass pots; modifying current red porgy regulations; establishing a program to collect fees from the wreckfish industry; establishing a program to collect data on snapper and grouper permits as they are sold; and establishing a protocol for the collection of data for Endangered Species Act/section 7 consultation.

A scoping meeting to determine the scope of significant issues to be addressed in the DSEIS and the associated Amendment 13 will be conducted at the Council's March 4-8, 2002, meeting in Savannah, GA.

Following consideration of public comments, the Council intends to finalize and approve draft Amendment 13 to the FMP and the DSEIS for public hearings in 2002. These documents are expected to be released for public comment and filed with the Environmental Protection Agency in 2003.

Authority: 6 U.S.C. 1801 *et seq.*

Dated: January 25, 2002.

Jonathan Kerland,

Acting Director, Office of Sustainable Fisheries, National Marine Fisheries Service.

[FR Doc. 02–2301 Filed 1–30–02; 8:45 am]

BILLING CODE 3510–22–S

DEPARTMENT OF COMMERCE

National Oceanic and Atmospheric Administration

50 CFR Part 622

[I.D. 012502A]

Fisheries of the Caribbean, Gulf of Mexico, and South Atlantic; Snapper-Grouper Fishery off the Southern Atlantic States; Amendment 14

AGENCY: National Marine Fisheries Service (NMFS), National Oceanic and Atmospheric Administration (NOAA), Commerce.

ACTION: Notice of intent to prepare a draft supplemental environmental impact statement (DSEIS); request for comments.

SUMMARY: The South Atlantic Fishery Management Council (Council) intends to prepare a DSEIS to assess the impacts on the natural and human environment of the management measure proposed in its draft Amendment 14 to the Fishery Management Plan for the Snapper-Grouper Fishery of the South Atlantic Region (FMP).

DATES: Written comments on the scope of issues to be addressed in the preliminary DSEIS will be accepted through March 4, 2002.

ADDRESSES: Comments and requests for copies of the DSEIS should be sent to Robert K. Mahood, Executive Director, South Atlantic Fishery Management Council, One Southpark Circle, Suite 306, Charleston, SC 29407–4699, FAX: 843–769–4520; email: robert.mahood@noaa.gov.

FOR FURTHER INFORMATION CONTACT: Kim Iverson, Public Information Office; 843-571-4366 or kim.iverson@noaa.gov.

SUPPLEMENTARY INFORMATION: The snapper grouper fishery off the South Atlantic States in the exclusive economic zone is managed under the FMP. Following Council preparation,

the FMP was approved and implemented by NMFS under the authority of the Magnuson-Stevens Fishery Conservation and Management Act (Magnuson-Stevens Act) in March of 1983. Currently, the Council is preparing draft FMP Amendment 14 and a DSEIS as an integrated part of the Amendment. The DSEIS will discuss the proposed Amendment 14 management measures in conjunction with reasonable alternatives. Each alternative will be assessed in relation to the environmental consequences with a no-action alternative considered as one of the options.

The Council is considering the use of Marine Protected Areas (MPAs) as a management tool to protect overfished stocks and maintain the sustained existence of healthy stocks in the snapper grouper complex. MPAs serve as geographical areas with various degrees of protection from harvest including prohibition of specific gear types, seasonal spawning area closures, complete closure from fishing, and combinations of the aforementioned. Anticipated benefits from the MPAs include the protection of critical life stages, physical habitats, age structure, genetic diversity of the stock, and biodiversity. In addition to ensuring the long-term ecological viability of the fish stock and introducing a provision of insurance against uncertainty, MPAs have the potential to provide opportunities for education and research.

In Amendment 14, the Council is considering using MPAs as an additional management tool to supplement traditional management measures and promote its ultimate goal of conservation and management of fish stocks in the South Atlantic exclusive economic zone. The high species diversity and complex life history of fish within the snapper grouper management group supports a greater ecosystem approach to resource management of the stock. The Council intends that Amendment 14 center on establishing MPAs in critical habitat for overfished deepwater species including speckled hind, warsaw grouper, misty grouper, yellowedge grouper, snowy grouper, golden tilefish, sand tilefish, and blueline tilefish.

A scoping meeting to determine the scope of significant issues to be addressed in the DSEIS and the associated Amendment 14 will be conducted at the Council's March 4-8, 2002, meeting in Savannah, GA.

Following consideration of public comments, the Council intends to finalize and approve draft Amendment 14 to the FMP and the DSEIS for two rounds of public hearings, one in 2002 and one early in 2003. These documents are expected to be released for public comment and filed with the Environmental Protection Agency following the June 2003 Council meeting.

Authority: 6 U.S.C. 1801 *et seq.*

Dated: January 25, 2002.

Jonathan Kurlund,

Acting Director, Office of Sustainable Fisheries, National Marine Fisheries Service.

[FR Doc. 02–2405 Filed 1–30–02; 8:45 am]

BILLING CODE 3510–22–S

DEPARTMENT OF COMMERCE

National Oceanic and Atmospheric Administration

50 CFR Part 697

[Docket No. 010918229–1229–01; I.D. 022301A]

RIN 0648–AP15

American Lobster Fishery

AGENCY: National Marine Fisheries Service (NMFS), National Oceanic and Atmospheric Administration (NOAA), Commerce.

ACTION: Proposed rule; extension of the comment period.

SUMMARY: In a document published in the Federal Register on January 3, 2002, NMFS requested comments on proposed regulations to implement proposed management measures for the American lobster fishery in the Exclusive Economic Zone (EEZ) from Maine through North Carolina on or before February 19, 2002. This proposed rule document considers revisions to Federal American lobster regulations that are designed to be compatible with the Atlantic States Marine Fisheries Commission (Commission) Interstate Fishery Management Plan for American Lobster. The intent of this document is to announce an extension of the public comment period from February 19, 2002, to February 28, 2002.

DATES: Receipt of comments on the proposed rule is extended from February 19, 2002, to February 28, 2002.

ADDRESSES: Comments on the proposed rule should be sent to, and copies of supporting documents, including a Draft Environmental Impact Statement/ Regulatory Impact Review and an Initial Regulatory Flexibility Analysis, are available from the Director, State, Federal and Constituent Programs Office, NMFS, One Blackburn Drive, Gloucester, MA 01930. Comments will not be accepted if submitted via e-mail or the Internet. Comments regarding the collection-of-information requirements contained in the proposed rule should be sent to Harry Mears at the above address, and the Office of Information and Regulatory Affairs, Office of Management and Budget, Washington, DC 20503 (ATTN: NOAA Desk Officer).

FOR FURTHER INFORMATION CONTACT: Robert Ross, NMFS, Northeast Region, 978–281–9234.

SUPPLEMENTARY INFORMATION: As announced in the Federal Register on January 3, 2002 (67 FR 282), NMFS requested comments on proposed regulations to implement proposed management measures for the American lobster fishery in the EEZ from Maine through North Carolina on or before February 19, 2002. In a letter to the NMFS Northeast Regional Administrator dated January 7, 2002, the Commission requested an extension of the public comment period to allow for full discussion and public comment on the proposed Federal American lobster regulations at a public meeting of the Commission's American Lobster Board scheduled to occur during the week of February 18, 2002. Therefore, by this document, NMFS is extending the public comment period from February 19, 2002, to February 28, 2002. There were no changes from the proposed rule previously published.

Dated: January 25, 2002.

Jon Kurland,

Acting Director, Office of Sustainable Fisheries, National Marine Fisheries Service.

[FR Doc. 02–2404 Filed 1–30–02; 8:45 am]

BILLING CODE 3510–22–S

Proposed Rules

Federal Register
Vol. 67, No. 21
Thursday, January 31, 2002

This section of the FEDERAL REGISTER contains notices to the public of the proposed issuance of rules and regulations. The purpose of these notices is to give interested persons an opportunity to participate in the rule making prior to the adoption of the final rules.

DEPARTMENT OF AGRICULTURE

Rural Utilities Service

7 CFR Part 1755

RUS Specification for Voice Frequency Loading Coils

AGENCY: Rural Utilities Service, USDA.

ACTION: Proposed rule.

SUMMARY: The Rural Utilities Service (RUS) proposes to amend its regulations on Telecommunications Standards and Specifications for Materials, Equipment and Construction, by rescinding the current issue of RUS Bulletin 345–22, RUS Specification for Voice Frequency Loading Coils, PE–26. This specification has become outdated because of advancements made in the delivery of telecommunications services to rural subscribers. This bulletin is incorporated by reference in RUS telecommunications regulations. Therefor, RUS is requesting public comments on this proposed rescission.

DATES: Comments concerning this proposed rule shall be received by RUS or be postmarked no later than April 1, 2002.

ADDRESSES: Comments should be mailed to Gerald F. Nugent, Jr., Director, Telecommunications Standards Division, Rural Utilities Service, U.S. Department of Agriculture, 1400 Independence Avenue, SW., STOP 1598, Washington, DC 20250–1598. RUS requests an original and three copies of all comments (7 CFR part 1700). All comments received will be made available for public inspection at room 2905, South Building, U.S. Department of Agriculture, 1400 Independence Avenue, SW., STOP 1598 Washington, DC between 8 a.m. and 4 p.m. (7 CFR 1.27(b)).

FOR FURTHER INFORMATION CONTACT: Charlie I. Harper, Jr., Chief, Outside Plant Branch, Telecommunications Standards Division, Rural Utilities Service, U.S. Department of Agriculture, 1400 Independence Avenue, SW., STOP 1598, Washington, DC 20250–1598, telephone (202) 720–0667.

SUPPLEMENTARY INFORMATION:

Executive Order 12866

This proposed rule is exempt from the Office of Management and Budget (OMB) review for the purposes of Executive Order 12866 and, therefore has not been reviewed by OMB.

Executive Order 12988

This proposed rule has been reviewed under Executive Order 12988, Civil Justice Reform. RUS has determined that this proposed rule meets the applicable standards provided in section 3 of that Executive Order. In addition, all State and local laws and regulations that are in conflict with this rule will be preempted, no retroactive effect will be given to this rule, and, in accordance with section 212(e) of the Department of Agriculture Reorganization Act of 1994 (7 U.S.C. 6912(e)), administrative appeal procedures, if any, must be exhausted before an action against the Department or its agencies may be initiated.

Regulatory Flexibility Act Certification

RUS has determined that this proposed rule will not have a significant economic impact on a substantial number of small entities, as defined by the Regulatory Flexibility Act (5 U.S.C. 601 *et seq.*). The RUS telecommunications program provides loans to borrowers at interest rates and on terms that are more favorable than those generally available from the private sector. RUS borrowers, as result of obtaining federal financing, receive economic benefits that exceed any direct economic costs associated with complying with RUS regulations and requirements. Small entities are not subjected to any requirement which are not applied equally to large entities.

Information Collection and Recordkeeping Requirements

This proposed rule contains no information collection or recordkeeping requirements under the Paperwork Reduction Act of 1995 (44 U.S.C. Chapter 35).

National Environmental Policy Act Certification

The Administrator of RUS has determined that this proposed rule will not significantly affect the quality of the human environment as defined by the National Environmental Policy Act of 1969 (42 U.S.C. 4321 *et seq.*). Therefore, this action does not require an environmental impact statement or assessment.

Catalog of Federal Domestic Assistance

The program described by this proposed rule is listed in the Catalog of Federal Domestic Assistance programs under No. 10.851, Rural Telephone Loans and Loan Guarantees, and No. 10.852, Rural Telephone Bank Loans. This catalog is available on a subscription basis from the Superintendent of Documents, the United States Government Printing Office, Washington, DC 20402–9325. Telephone (202) 512–1800.

Executive Order 12372

This proposed rule is excluded from the scope of Executive Order 12372, Intergovernmental Consultation, which may require consultation with State and local officials. See the final rule related notice entitled, ''Department Programs and Activities Excluded from Executive Order 12372,'' (50 FR 47034).

Unfunded Mandates

This proposed rule contains no Federal mandates (under the regulatory provision of Title II of the Unfunded Mandates Reform Act) for State, local, and tribal governments or the private sector. Thus, this proposed rule is not subject to the requirements of section 202 and 205 of the Unfunded Mandates Reform Act.

Background

RUS issues publications titled ''bulletins'' which serve to guide borrowers regarding already codified policy, procedures, and requirements needed to manage loans, loan guarantee programs, and the security instruments which provide for and secure RUS financing. RUS issues standards and specifications for construction of telecommunications facilities financed with RUS loan funds. After review of RUS's bulletin and specification issuances, RUS has decided to propose to rescind the outdated RUS Bulletin 345–22, RUS Specification for Voice Frequency Loading Coils, PE–26, issued January 19, 1989. RUS felt rescission was the best option for this bulletin and welcomes public comment. This

bulletin is incorporated by reference at 7 CFR 1755.97.

RUS Bulletin 345–22, RUS Specification for Voice Frequency Loading Coils, PE–26, specifies the technical requirements for voice frequency loading coils that are used in aerial, direct burial, and underground plant installations. Since RUS borrowers are designing and constructing new plant facilities capable of handling both voice and data transmission which require that loop lengths be shorter than 18,000 feet, the installation of voice frequency loading coils in these new transmission facilities using these shorter loop lengths is no longer required. Therefore RUS is proposing to rescind this bulletin because of obsolescence.

List of Subjects in 7 CFR Part 1755

Loan programs-communications, Reporting and recordkeeping requirements, Rural areas, Telephone.

For reasons set out in the preamble, RUS proposes to amend Chapter XVII of title 7 of the Code of Federal Regulations as follows:

PART 1755—TELECOMMUNICATIONS STANDARDS AND SPECIFICATIONS FOR MATERIALS, EQUIPMENT AND CONSTRUCTION

1. The authority citation for part 1755 continues to read as follows:

Authority: 7 U.S.C. 901 *et seq.*, 1921 *et seq.*, 6941 *et seq.*

§ 1755.97 [Amended]

2. Section 1755.97 is amended by removing the entry ''RUS Bulletin No. 345–22'' from the table.

Dated: January 14, 2002.

Hilda Gay Legg,

Administrator, Rural Utilities Service.

[FR Doc. 02–2298 Filed 1–30–02; 8:45 am]

BILLING CODE 3410–15–P

DEPARTMENT OF TRANSPORTATION

Federal Aviation Administration.

14 CFR Chapter I

[Docket No.: FAA–2000–7623]

Review of Existing Regulations

AGENCY: Federal Aviation Administration (FAA), DOT.

ACTION: Disposition of comments on existing regulations.

SUMMARY: The FAA is notifying the public of the outcome of our periodic review of existing regulations. This action summarizes the public comments we received and our responses to them. This action is part of our effort to make our regulatory program more effective and less burdensome.

FOR FURTHER INFORMATION CONTACT: Patrick W. Boyd, Office of Rulemaking, ARM–23, Federal Aviation Administration, 800 Independence Avenue SW., Washington, DC 20591; telephone (202) 267–7320.

SUPPLEMENTARY INFORMATION:

Background

Under section 5 of Executive Order 12866, Regulatory Planning and Review, each agency has developed a program to periodically review its existing regulations to determine if they should be changed or eliminated. See 58 FR 51735, October 4, 1993. The purposes of the review are to make the agency's regulatory program more effective in achieving the regulatory objectives and less burdensome. The FAA conducts its review on a three-year cycle.

On July 13, 2000, we published a document in the **Federal Register** asking the public to tell us which regulations we should amend, eliminate, or simplify. See 65 FR 43265. The document stated that we would consider the comments and adjust our regulatory priorities, consistent with our statutory responsibilities. The document also stated we would publish a summary of the comments and an explanation of how we would act on them.

Summary of Comments

In response to the July document, we received a total of 476 comments from 207 different commenters. The issue generating the most public comments is the proposed Aviation Noise Abatement Policy 2000, which we published in the **Federal Register** on July 14, 2000. See 65 FR 43802. The noise-related topics most frequently mentioned include the following:

- Noise levels,
- Day/night average sound levels,
- Local control,
- Minimum altitude requirements,
- Supersonic aircraft and sonic booms,
- National park overflights,
- The FAA's and the public's conflict of interest,
- Night flights, and
- General comments about the policy.

Overall, commenters are opposed to both the proposed policy and the growing noise problem and indicated that the FAA should do more to protect the public from aircraft noise. The commenters addressed the following specific issues:

- Reducing the current maximum noise allotment (decibel level is too high);
- Creating different noise levels for day and night;
- Giving communities more local control over noise policies;
- Increasing the minimum altitude requirements (many commenters specified 3,000 feet);
- Creating stricter regulations for supersonic aircraft and sonic booms, helicopters, and ultralights; and
- Banning or reducing the overflights of national parks to preserve the park and wildlife.

Other issues not related to the proposed noise policy that were raised by the commenters include the following:

- Age 60 rule: Commenters indicated that this rule causes age discrimination and, because of advances in medical technology, some people remain healthy and fit to fly after age 60.
- Agricultural aircraft flight operations: Commenters addressed the dispensing of chemicals and the differences in agricultural operations over congested areas versus noncongested areas.
- Annual aircraft inspections: Commenters favored an increase between aircraft inspections from 1 year to 1½, 2, or 3 years.
- Biennial flight reviews: Commenters stated that biennial flight reviews should be allowed in aircraft without fully functioning dual controls.
- Certification requirements for commercial pilots: Some commenters indicated that the regulations need to be clarified and need to have regulatory options for gliders, because gliders are different than other aircraft and some of the current regulations are irrelevant. Commenters also specifically requested clarification of solo requirements.
- Certification requirements for private pilots: Some commenters encouraged more night flying requirements, especially for training. Commenters also requested specific glider requirements.
- Commuter and on-demand flight operations: Commenters discussed takeoff, approach, and landing minimums and how long records should be kept on file.
- Drug and alcohol use, testing, and offenses: Some commenters believe charity airlifts and smaller flight operations should be excused from drug and alcohol testing requirements and that regulations concerning use of alcohol should be more restrictive with ''zero tolerance.'' Various commenters also requested clarification of the

regulations dealing with drug or alcohol offenses in aircraft or in motor vehicles.

• Flight- and duty-time rest requirements: Some commenters indicated that there should be a better definition of ''duty time'' and its official beginning or end. The commenters suggested having one set of regulations instead of a set for each kind of operation.

• Instrument and equipment requirements: Commenters discussed certain types of equipment, such as transponders, aircraft lights, pitot heat indication systems, emergency equipment, and flight recorders. Some commenters want more stringent regulations, while others want fewer restrictions and some indicated the regulation should be deleted.

• Medical standards and certification: Commenters addressed medical waivers, self-certification for medical certificates, eye requirements and tests, and the removal of the physical requirements for private pilots.

• Minimum altitude requirements: Commenters requested overall clarification of the minimum altitude requirements. One commenter suggested that hot-air balloons not be restricted by a minimum altitude.

• Recent night flight experience: Most commenters indicated that the requirements for recent night flight experience are too stringent and need to be reevaluated.

• Single-engine certification course: Commenters requested that the commercial pilot, single-engine aircraft certification course requirement allow training to be conducted in multi-engine aircraft because many commercial pilots already have multi-engine aircraft ratings.

Note: All comments received on this topic are form letters from various commenters.

Although no commenters specifically addressed the Regulatory Flexibility Act, the National Air Transportation Association commented that its small business members are burdened by unnecessary or unclear regulations, specifically addressing the flight- and duty-time rest requirements. Other commenters implied that certain regulations cause undue economic, staffing, or work burdens for them as well. No comments addressed the topic of performance-based versus prescriptive regulations, and only one commenter suggested a simplified, plain language rewrite of the flight- and duty-time rest requirements.

Issues That We Will Consider for Rulemaking

During the review of comments, the FAA didn't identify any comments or recommendations that require response through an immediate rulemaking. The FAA notes, however, that several commenters raised issues that merit consideration for future rule changes. As opportunities arise, we will try to incorporate these issues into ongoing and future projects. For example, in response to the comment that hot-air balloons not be included in the minimum altitude requirements, the FAA is gathering data generated from flight testing taking place under an exemption for the balloon altitude restriction. The FAA will analyze these data for a possible change of minimum altitude requirements for balloons.

One commenter recommended that we revise commuter and on-demand flight operations regulations to reflect the unique capabilities of helicopters. The FAA agrees that a change in the operating specifications for helicopters may be warranted.

Some commenters suggested changing the instrument and equipment requirements. Specifically, one commenter suggested that protective breathing equipment (PBE) be checked before each flightcrew change, not before each flight. The FAA agrees. It wasn't our intent to require a check of PBE at the beginning of each flight. In addition, one commenter recommended that the FAA remove the regulations requiring signal flares. The FAA issued this regulation before there were radar, global positioning systems (GPSs), and continuous communications; therefore, the requirement to carry signal flares is outdated and could be removed from the regulation without reducing safety.

Other issues the FAA will consider for future rulemaking include the following:

• Revising 14 CFR 23.1587(a)(1) regarding airplane performance to reference both ''clean'' and landing configurations and 14 CFR 23.1587(a)(2) to specify ''multiengine.''

• Amending 14 CFR 91.109(a) to permit dual instruction in airplanes that lack dual flight controls.

• Revising 14 CFR 121.711 regarding radio communications because it is outdated.

• Codifying Exemption No. 3585 into the rules for dispatching. Exemption No. 3585 permits part 121 operators to continue to dispatch airplanes under instrument flight rules (IFR) when conditional language in a one-time increment of the weather forecast states that the weather at the destination airport, alternate airport, or both airports could be below the authorized weather minimums. This would occur when other time increments of the weather forecast state that the weather conditions will be at or above the authorized weather minimums.

• Clarifying the language for weather minimums for special visual flight rules.

Issues We Are Currently Addressing

The FAA is currently considering numerous issues addressed by the commenters. The most common issues include the following:

• The Aviation Noise Abatement Policy 2000: The FAA is preparing a final version.

• Airworthiness directives: The FAA will address comments related to proposed airworthiness directives (ADs) during the preparation of final ADs.

• Certification requirements for mechanics: The FAA is now studying this issue as a prerequisite for future rulemaking.

• Certification requirements for pilots: The FAA is drafting a notice of proposed rulemaking (NPRM) on additional revisions to the pilot, flight instructor, and pilot school certification rules.

• Drug and alcohol use, testing, and offenses: The FAA is drafting an NPRM on anti-drug and alcohol misuse prevention programs for personnel engaged in specified aviation activities.

• Flight and duty time rest requirements: The FAA is drafting a supplemental NPRM on flight crewmember duty period, flight-time, and rest requirements.

• Single-engine certification course: The FAA has incorporated recommendations by commenters into the rulemaking project on additional revisions to the pilot, flight instructor, and pilot school certification rules.

The FAA is also addressing policies and procedures regarding issues raised by commenters. For example, one commenter suggested that the FAA review the redundancy in the Aircraft Certification Systems Evaluation Program (ACSEP) evaluations and ongoing principal inspector assignments. The FAA is currently addressing this issue in the ''AIR–200 ACSEP Phase II'' project scheduled for implementation in fiscal year 2002.

In addition, the Aviation Rulemaking Advisory Committee (ARAC) most recently considered numerous issues addressed by the commenters, including the following:

• Alternate inspection program/annual aircraft inspections: the 14 CFR part 43 General Aviation Working Group addressed these issues in the

NPRM that the working group presented to the Air Carrier and General Aviation Maintenance Issue Area.

- Major/minor repairs or alterations: the ARAC will consider comments during its review of a task on major/minor repairs or alterations.
- Pressurized compartment loads: the ARAC will consider comments during its review of a task on pressurized compartment loads.
- Pressurized and low pressure pneumatic systems: these issues were discussed at past working group meetings, but were not included in the draft rule. The harmonization working group will address this issue at its next meeting.

One commenter stated that the current regulations indicate a major difference between 14 CFR part 25 and JAR 25, jeopardizing the objective of harmonization. The FAA is aware of industry concerns regarding this regulation and plans to have the ARAC Transport Airplane and Engine Issue Area and the Occupant Safety Issue Area address harmonization efforts.

Issues That We May Address in the Future

The FAA received comments on issues it may consider for future action, such as initiating new or revising existing guidance material, policies, or procedures. One commenter suggested that very high frequency omnirange station (VOR) equipment checks be permitted against an installed IFR-certified GPS receiver in addition to checking against a second VOR receiver. The FAA notes that using a GPS as a cross-reference for the VOR could show a higher degree of accuracy than comparing one VOR to another. The FAA will examine this issue and determine its use as a possible new procedure.

Issues That We Have Addressed

The FAA had already addressed some recommendations made by commenters. They were addressed as NPRMs or final rules before the request for comments for the Review of Existing Rules was published. Several commenters recommend changing the Age 60 Rule. The FAA notes that on December 11, 1995, it issued a Disposition of Comments and Notice of Agency Decisions (Disposition) regarding the Age 60 Rule. The Disposition announced the FAA's determination not to propose to change the Age 60 Rule at that time; the FAA maintains that position. One commenter recommended that the requirement for a valid medical certificate be dropped from the private pilot certificate criteria because it places a financial and managerial burden on the FAA and has no correlation to safety. The FAA notes that this recommendation was originally proposed in the Pilot, Flight Instructor, Ground Instructor, and Pilot School Certification Rules NPRM (60 FR 41160, Aug. 11, 1995), but was withdrawn from the final rule. Another commenter suggested that the FAA extend the exception to the recent night flight takeoff and landing experience requirements for pilots who hold more than one type rating; the commenter suggested extending it to pilots in command (PICs) who hold only one type rating. The FAA notes that it considered this change during the development of the final rule on 14 CFR 61.57(e)(3); however, it rejected the change because the purpose of the regulation was not to alleviate the night takeoff and landing currency, but to alleviate a financial burden on pilots who operate multiple type-rated airplanes requiring a pilot crew of two or more.

In addition, the FAA received comments on issues that became final rules after the comment period closed. For example, one commenter suggested that the Federal Bureau of Investigation perform the background checks for employees requiring unescorted access to the Security Identification Display Area (SIDA) because of the difficulty and economic burden that it places on the employee. Another commenter suggested that if a fixed-base operator is physically separated from the air carrier areas of the airport, it should be excluded from the SIDA. The FAA considered these comments during the development of the final rule on airport security, 14 CFR part 107, issued July 2, 2001 (66 FR 37273).

Issues That We Won't Address

In some cases, the FAA found that the current regulation is necessary and doesn't need a revision, or the recommendations didn't address a safety concern. For example, some commenters suggested that the Mode C transponder requirement be expanded in the Los Angeles International Airport area because of the intense air traffic. The FAA doesn't agree that further rulemaking in this case would measurably enhance the operation of the national airspace system. Some commenters suggested that the recent night flight experience regulation causes inconvenience and financial expenditure, and the FAA should reevaluate or eliminate the requirement. The FAA doesn't believe the recommendation to eliminate the PIC night takeoff and landing currency requirements can be justified considering the FAA's statutory requirements to regulate safety and air commerce. Other commenters suggested that the FAA revise 14 CFR 91.109 to permit a biennial flight review (BFR) to be given in an airplane without fully functional dual controls. The FAA believes that because a BFR is a training session by a flight instructor, dual controls for a BFR are justified in the interest of safety. One commenter stated that the definitions of ''congested,'' ''noncongested,'' and ''other than congested'' areas in relation to agricultural aircraft regulations are clear. However, the commenter stated that the local FAA who takes enforcement action on an agricultural airplane operator for low flying interprets the regulation to correspond to circumstances at the time instead of following the regulations. The commenter questions whether the regulations are being followed or if the FAA is ''satisfying urban sprawl.'' The FAA notes that 14 CFR 137.49 provides relief to the agricultural aerial applicator from the minimum altitude requirements; therefore, a revision to the regulation is not necessary.

Conclusion

The FAA finds that reviewing public comments on our regulations helps us in assessing the effectiveness of our regulatory agenda and adjusting the agenda, when necessary. As a result of this review, we have identified several issues that we will address in future rulemaking projects. In addition, the review offers us a general understanding of the public's concerns regarding our regulations. We intend to continue to request public comments on a three-year cycle to identify any necessary changes to our regulatory program. We plan to issue a document soliciting public comments for our next review in 2003.

Issued in Washington, DC, on January 18, 2002.

Nicholas A. Sabatini,

Associate Administrator for Regulation and Certification.

[FR Doc. 02–2277 Filed 1–30–02; 8:45 am]

BILLING CODE 4910–13–P

DEPARTMENT OF TRANSPORTATION

Federal Aviation Administration

14 CFR Part 39

[Docket No. 2001–CE–43–AD]

RIN 2120–AA64

Airworthiness Directives; Raytheon Aircraft Company Models E55, E55A, A56TC, 58, 58A, 58P, 58PA, 58TC, and 58TCA Airplanes

AGENCY: Federal Aviation Administration, DOT.

ACTION: Notice of proposed rulemaking (NPRM).

SUMMARY: This document proposes to adopt a new airworthiness directive (AD) that would apply to certain Raytheon Aircraft Company (Raytheon) Models E55, E55A, A56TC, 58, 58A, 58P, 58PA, 58TC, and 58TCA airplanes. This proposed AD would require you to inspect the Instrument Subpanel electroluminescent panel retaining screw for proper length and the rotating beacon circuit breaker switch (or any other switch in the same location) for damage, and replace any screw or circuit breaker switch as necessary. This proposed AD is the result of a report that an improper length electroluminescent panel retaining screw damaged the rotating beacon circuit breaker switch which resulted in damaged wiring. The actions specified by this proposed AD are intended to prevent damage to the rotating beacon circuit breaker switch or any other switch in the same location because of an incorrect length electroluminescent panel retaining screw. This condition could result in failure of the circuit breaker and lead to smoke and/or fire in the cockpit.

DATES: The Federal Aviation Administration (FAA) must receive any comments on this proposed rule on or before April 5, 2002.

ADDRESSES: Submit comments to FAA, Central Region, Office of the Regional Counsel, Attention: Rules Docket No. 2001–CE–43–AD, 901 Locust, Room 506, Kansas City, Missouri 64106. You may view any comments at this location between 8 a.m. and 4 p.m., Monday through Friday, except Federal holidays.

You may get service information that applies to this proposed AD from Raytheon Aircraft Company, P.O. Box 85, Wichita, Kansas 67201–0085; telephone: (800) 429–5372 or (316) 676–3140. You may also view this information at the Rules Docket at the address above.

FOR FURTHER INFORMATION CONTACT: Todd Dixon, Aerospace Engineer, FAA, Wichita Aircraft Certification Office, 1801 Airport Road, Room 100, Mid-Continent Airport, Wichita, Kansas 67209; telephone: (316) 946–4152; facsimile: (316) 946–4407.

SUPPLEMENTARY INFORMATION:

Comments Invited

How Do I Comment on This Proposed AD?

The FAA invites comments on this proposed rule. You may submit whatever written data, views, or arguments you choose. You need to include the rule's docket number and submit your comments to the address specified under the caption **ADDRESSES.** We will consider all comments received on or before the closing date. We may amend this proposed rule in light of comments received. Factual information that supports your ideas and suggestions is extremely helpful in evaluating the effectiveness of this proposed AD action and determining whether we need to take additional rulemaking action.

Are There Any Specific Portions of This Proposed AD I Should Pay Attention To?

The FAA specifically invites comments on the overall regulatory, economic, environmental, and energy aspects of this proposed rule that might suggest a need to modify the rule.

You may view all comments we receive before and after the closing date of the rule in the Rules Docket. We will file a report in the Rules Docket that summarizes each contact we have with the public that concerns the substantive parts of this proposed AD.

How Can I Be Sure FAA Receives My Comment?

If you want FAA to acknowledge the receipt of your comments, you must include a self-addressed, stamped postcard. On the postcard, write ''Comments to Docket No. 2001–CE–43–AD.'' We will date stamp and mail the postcard back to you.

Discussion

What Events Have Caused This Proposed AD?

Raytheon notified FAA of an incident where the pilot had to return to the departing airport after declaring an emergency because of smoke in the cockpit. After investigation, FAA determined that the cause of smoke in the cockpit was a result of damage to the rotating beacon circuit breaker switch caused by an improper length electroluminescent panel retaining screw. The damaged circuit breaker switch failed to shutdown the electrical current to the rotating beacon. Failure of the circuit breaker switch caused the wiring to burn through the insulation and the other wires in the wire bundle that were routed with the wiring to the rotating beacon circuit breaker switch.

What Are the Consequences if the Condition Is Not Corrected?

This condition, if not corrected, could result in failure of the rotating beacon circuit breaker switch or any other switch in the same location. Failure of the circuit breaker switch could result in smoke and/or fire in the cockpit.

Is There Service Information That Applies to This Subject?

Raytheon has issued Mandatory Service Bulletin SB 33–3452, Issued: May, 2001.

What Are the Provisions of This Service Information?

The service bulletin includes procedures for:

—Inspecting the Instrument Subpanel electroluminescent panel for the installation of a rotating beacon circuit breaker switch or any other switch installed directly above the electroluminescent panel retaining screw;

—Inspecting the installed switch for damage;

—Replacing any damaged switch;

—Inspecting the electroluminescent panel retaining screw to ensure correct length; and

—Replacing any incorrect length electroluminescent panel retaining screw with a part number (P/N) MS35214–24 screw.

The FAA's Determination and an Explanation of the Provisions of This Proposed AD

What Has FAA Decided?

After examining the circumstances and reviewing all available information related to the incidents described above, we have determined that:

—The unsafe condition referenced in this document exists or could develop on other Raytheon Models E55, E55A, A56TC, 58, 58A, 58P, 58PA, 58TC, and 58TCA airplanes of the same type design;

—The actions specified in the previously-referenced service information should be accomplished on the affected airplanes; and

—AD action should be taken in order to correct this unsafe condition.

What Would This Proposed AD Require?

This proposed AD would require you to incorporate the actions in the previously-referenced service bulletin.

What Are the Differences Between This Proposed AD and the Service Information?

Raytheon Mandatory Service Bulletin No. SB 33–3452, Issued: May, 2001, is applicable to Models E55, A56TC, 58, 58P, and 58TC airplanes. We have expanded the applicability of this proposed AD to include Models E55A, 58A, 58PA, and 58TCA airplanes. The serial number ranges of the affected models indicated in the service information includes these models as indicated on Type Certificate Data Sheet 3A16, dated January 15, 2000.

Raytheon Mandatory Service Bulletin No. SB 33–3452, Issued: May, 2001, specifies that you accomplish the inspection within 25 hours time-in-service (TIS) or 10 days after the effective date of the AD. We propose a requirement that you inspect within 100 hours TIS after the effective date of this proposed AD.

We do not have justification to require this action within 25 hours TIS. We use compliance times such as this when we have identified an urgent safety of flight situation. We believe that 100 hours TIS will give the owners or operators of the affected airplanes enough time to have the proposed actions accomplished without compromising the safety of the airplanes.

Cost Impact

How Many Airplanes Would This Proposed AD Impact?

We estimate that this proposed AD affects 1,636 airplanes in the U.S. registry.

What Would Be the Cost Impact of This Proposed AD on Owners/Operators of the Affected Airplanes?

We estimate the following costs to accomplish the proposed inspection:

Labor cost	Parts cost	Total cost per airplane	Total cost on U.S. operators
1 workhour × $60 = $60	No parts required for the inspection	$60	$98,160

We estimate the following costs to accomplish any necessary replacements that would be required based on the results of the proposed inspection. We have no way of determining the number of airplanes that may need such replacements:

Labor cost	Parts cost	Total cost per airplane
3 workhours × $60 = $180	$1 for new electroluminescent panel retaining screw. $40 for new circuit breaker switch	$180 + applicable replacement part(s) cost

Regulatory Impact

Would This Proposed AD Impact Various Entities?

The regulations proposed herein would not have a substantial direct effect on the States, on the relationship between the national government and the States, or on the distribution of power and responsibilities among the various levels of government. Therefore, it is determined that this proposed rule would not have federalism implications under Executive Order 13132.

Would This Proposed AD Involve a Significant Rule or Regulatory Action?

For the reasons discussed above, I certify that this proposed action (1) is not a ''significant regulatory action'' under Executive Order 12866; (2) is not a ''significant rule'' under DOT Regulatory Policies and Procedures (44 FR 11034, February 26, 1979); and (3) if promulgated, will not have a significant economic impact, positive or negative, on a substantial number of small entities under the criteria of the Regulatory Flexibility Act. A copy of the draft regulatory evaluation prepared for this action has been placed in the Rules Docket. A copy of it may be obtained by contacting the Rules Docket at the location provided under the caption **ADDRESSES**.

List of Subjects in 14 CFR Part 39

Air transportation, Aircraft, Aviation safety, Safety.

The Proposed Amendment

Accordingly, under the authority delegated to me by the Administrator, the Federal Aviation Administration proposes to amend part 39 of the Federal Aviation Regulations (14 CFR part 39) as follows:

PART 39—AIRWORTHINESS DIRECTIVES

1. The authority citation for part 39 continues to read as follows:

Authority: 49 U.S.C. 106(g), 40113, 44701.

§ 39.13 [Amended]

2. FAA amends § 39.13 by adding a new airworthiness directive (AD) to read as follows:

Raytheon Aircraft Company: Docket No. 2001–CE–43–AD

(a) *What airplanes are affected by this AD?* This AD affects the following airplane models and serial numbers that are certificated in any category:

Model	Serial numbers
E55 and E55A	TE–768 through TE–1201
A56TC	TG–84 through TG–94
58 and 58A	TH–1 through TH–1388 and TH–1390 through TH–1395
58P and 58PA	TJ–3 through TJ–435 and TJ–437 through TJ–443
58TC and 58TCA.	TK–1 through TK–146 and TK–148 through TK–150

(b) *Who must comply with this AD?* Anyone who wishes to operate any of the airplanes identified in paragraph (a) of this AD must comply with this AD.

(c) *What problem does this AD address?* The actions specified by this AD are intended to prevent damage to the rotating beacon circuit breaker switch or any other switch in the same location because of an incorrect length electroluminescent panel retaining screw. This condition could result in failure of the circuit breaker and lead to smoke and/or fire in the cockpit.

(d) *What actions must I accomplish to address this problem?* To address this problem, you must accomplish the following:

Actions	Compliance	Procedures
(1) Inspect the Instrument Subpanel electroluminescent panel for the installation of a rotating beacon circuit breaker switch or any other switch directly above the lower electroluminescent panel retaining screw. (i) If a blanking plug is installed above the lower electroluminescent panel retaining screw, ensure that the correct length screw is installed. The correct length is 0.28 to 0.31 inches. (ii) If the screw is not the correct length, install part number (P/N) MS35214–24. (iii) If a rotating beacon circuit breaker switch or any other switch is installed, inspect the switch for damage.	Within the next 100 hours time-in-service (TIS) after the effective date of this AD.	In accordance with the Accomplishment Instructions section of Raytheon Mandatory Service Bulletin SB 33–3452, Issued: May, 2001.
(2) Replace any damaged switch found during the inspection required in paragraph (d)(1)(iii) of this AD and replace the electroluminescent panel retaining screw if it is not 0.28 to 0.31 inches in length with a P/N MS35214–24 screw.	Prior to further flight after the inspection required by paragraph (d)(1)(iii) of this AD.	In accordance with the Accomplishment Instructions section of Raytheon Mandatory Service Bulletin SB 33–3452, Issued: May, 2001.
(3) Only install an electroluminescent panel retaining screw in the lower part of the Instrument Subpanel (underneath the circuit breaker switches) that:. (i) Has a length of at least 0.28 inches but not longer than 0.31 inches; or (ii) Is P/N MS35214–24 or FAA-approved equivalent part number.	As of the effective date of this AD	Not applicable.

(e) *Can I comply with this AD in any other way?* You may use an alternative method of compliance or adjust the compliance time if:

(1) Your alternative method of compliance provides an equivalent level of safety; and

(2) The Manager, Wichita Aircraft Certification Office (ACO), approves your alternative. Submit your request through an FAA Principal Maintenance Inspector, who may add comments and then send it to the Manager, Wichita ACO.

Note: This AD applies to each airplane identified in paragraph (a) of this AD, regardless of whether it has been modified, altered, or repaired in the area subject to the requirements of this AD. For airplanes that have been modified, altered, or repaired so that the performance of the requirements of this AD is affected, the owner/operator must request approval for an alternative method of compliance in accordance with paragraph (e) of this AD. The request should include an assessment of the effect of the modification, alteration, or repair on the unsafe condition addressed by this AD; and, if you have not eliminated the unsafe condition, specific actions you propose to address it.

(f) *Where can I get information about any already-approved alternative methods of compliance?* Contact Todd Dixon, Aerospace Engineer, FAA, Wichita Aircraft Certification Office, 1801 Airport Road, Room 100, Mid-Continent Airport, Wichita, Kansas 67209; telephone: (316) 946–4152; facsimile: (316) 946–4407.

(g) *What if I need to fly the airplane to another location to comply with this AD?* The FAA can issue a special flight permit under sections 21.197 and 21.199 of the Federal Aviation Regulations (14 CFR 21.197 and 21.199) to operate your airplane to a location where you can accomplish the requirements of this AD.

(h) *How do I get copies of the documents referenced in this AD?* You may get copies of the documents referenced in this AD from Raytheon Aircraft Company, P.O. Box 85, Wichita, Kansas 67201–0085. You may view these documents at FAA, Central Region, Office of the Regional Counsel, 901 Locust, Room 506, Kansas City, Missouri 64106.

Issued in Kansas City, Missouri, on January 24, 2002.

Michael K. Dahl,

Acting Manager, Small Airplane Directorate, Aircraft Certification Service.

[FR Doc. 02–2300 Filed 1–30–02; 8:45 am]

BILLING CODE 4910–13–U

DEPARTMENT OF TRANSPORTATION

Federal Aviation Administration

14 CFR Part 39

[Docket No. 2001–SW–53–AD]

RIN 2120–AA64

Airworthiness Directives; Bell Helicopter Textron Canada Model 407 Helicopters

AGENCY: Federal Aviation Administration, DOT.

ACTION: Notice of proposed rulemaking (NPRM).

SUMMARY: This document proposes superseding an existing airworthiness directive (AD) for Bell Helicopter Textron Canada (BHTC) Model 407 helicopters. That AD currently requires preflight checking and repetitively inspecting the tailboom for a crack and replacing the tailboom if a crack is found. This action would require increasing the area of inspection for certain tailbooms and changing the applicability to restrict the inspection requirements to certain tailbooms that have not been redesigned. This proposal is prompted by cracking discovered in other areas of certain tailbooms and introduction of a redesigned tailboom with a chemically milled skin, which does not require the current inspections. The actions specified by the proposed AD are intended to remove certain tailbooms from the applicability and to increase the inspection requirements for certain tailbooms to prevent separation of the tailboom and subsequent loss of control of the helicopter.

DATES: Comments must be received on or before April 1, 2002.

ADDRESSES: Submit comments in triplicate to the Federal Aviation Administration (FAA), Office of the Regional Counsel, Southwest Region, Attention: Rules Docket No. 2001–SW–53–AD, 2601 Meacham Blvd., Room 663, Fort Worth, Texas 76137. You may also send comments electronically to the Rules Docket at the following address: *9-asw-adcomments@faa.gov.* Comments may be inspected at the Office of the Regional Counsel between

9 a.m. and 3 p.m., Monday through Friday, except Federal holidays.

FOR FURTHER INFORMATION CONTACT: Sharon Miles, Aviation Safety Engineer, FAA, Rotorcraft Directorate, Regulations Group, Fort Worth, Texas 76193–0111, telephone (817) 222–5122, fax (817) 222–5961.

SUPPLEMENTARY INFORMATION:

Comments Invited

Interested persons are invited to participate in the making of the proposed rule by submitting such written data, views, or arguments as they may desire. Communications should identify the Rules Docket number and be submitted in triplicate to the address specified above. All communications received on or before the closing date for comments will be considered before taking action on the proposed rule. The proposals contained in this document may be changed in light of the comments received.

Comments are specifically invited on the overall regulatory, economic, environmental, and energy aspects of the proposed rule. All comments submitted will be available, both before and after the closing date for comments, in the Rules Docket for examination by interested persons. A report summarizing each FAA-public contact concerned with the substance of this proposal will be filed in the Rules Docket.

Commenters wishing the FAA to acknowledge receipt of their mailed comments submitted in response to this proposal must submit a self-addressed, stamped postcard on which the following statement is made: ''Comments to Docket No. 2001–SW–53–AD. The postcard will be date stamped and returned to the commenter.

Availability of NPRMs

Any person may obtain a copy of this NPRM by submitting a request to the FAA, Office of the Regional Counsel, Southwest Region, Attention: Rules Docket No. 2001–SW–53–AD, 2601 Meacham Blvd., Room 663, Fort Worth, Texas 76137.

Discussion

On March 21, 2000, the FAA issued AD 2000–06–10, Amendment 39–11651 (65 FR 16804, March 30, 2000), to require preflight checking and repetitively inspecting the tailboom for a crack and replacing the tailboom if a crack is found. That action was prompted by four reports of cracks on the tailboom in the area of the horizontal stabilizer. The requirements of that AD are intended to prevent separation of the tailboom and subsequent loss of control of the helicopter.

Since the issuance of AD 2000–06–10, BHTC has issued Alert Service Bulletin ASB 407–99–26, Revision B, dated June 14, 2001 (ASB), to announce the release of an improved design tailboom assembly, P/N 407–030–801–201, that has been installed on BHTC Model 407 helicopters, serial number (S/N) 53476 and subsequent. The ASB states that these redesigned tailboom assemblies do not need the recurring inspection. For affected tailbooms, the ASB specifies extending the visual inspection to the area near certain fasteners on the left side of the tailboom forward of the horizontal stabilizer. Transport Canada, the airworthiness authority for Canada, classified this ASB as mandatory and issued AD CF–1999–17R1, dated July 24, 2001, to ensure the continued airworthiness of these helicopters in Canada.

This helicopter model is manufactured in Canada and is type certificated for operation in the United States under the provisions of 14 CFR 21.29 and the applicable bilateral agreement. Pursuant to this bilateral agreement, Transport Canada has kept the FAA informed of the situation described above. The FAA has examined the findings of Transport Canada, reviewed all available information, and determined that AD action is necessary for products of this type design that are certificated for operation in the United States.

This unsafe condition is likely to exist or develop on other helicopters of the same type design. Therefore, the proposed AD would supersede AD 2000–06–10 to contain the same requirements but would increase the areas of inspection for the tailbooms and would reduce the applicability to restrict the inspections to certain tailbooms. Installing a redesigned tailboom, P/N 407–030–801–201, would constitute terminating action for the requirements of this AD. An owner/operator (pilot) holding at least a private pilot certificate may perform the visual check required by paragraph (a) of this AD but must enter compliance with that paragraph into the helicopter records in accordance with 14 CFR 43.11 and 91.417(a)(2)(v). A pilot can perform this check because it involves only a visual check for a crack in the tailboom and is a part of a normal pilot preflight check.

The FAA estimates that 200 helicopters of U.S. registry would be affected by this proposed AD, that it would take approximately 5 hours for initial and recurring inspections per helicopter, and that the average labor rate is $60 per work hour. Based on these figures, the total cost impact of the proposed AD on U.S. operators is estimated to be $60,000 assuming no tailboom will be replaced.

The regulations proposed herein would not have a substantial direct effect on the States, on the relationship between the national Government and the States, or on the distribution of power and responsibilities among the various levels of government. Therefore, it is determined that this proposal would not have federalism implications under Executive Order 13132.

For the reasons discussed above, I certify that this proposed regulation (1) is not a ''significant regulatory action'' under Executive Order 12866; (2) is not a ''significant rule'' under the DOT Regulatory Policies and Procedures (44 FR 11034, February 26, 1979); and (3) if promulgated, will not have a significant economic impact, positive or negative, on a substantial number of small entities under the criteria of the Regulatory Flexibility Act. A copy of the draft regulatory evaluation prepared for this action is contained in the Rules Docket. A copy of it may be obtained by contacting the Rules Docket at the location provided under the caption **ADDRESSES.**

List of Subjects in 14 CFR Part 39

Air transportation, Aircraft, Aviation safety, Safety.

The Proposed Amendment

Accordingly, pursuant to the authority delegated to me by the Administrator, the Federal Aviation Administration proposes to amend part 39 of the Federal Aviation Regulations (14 CFR part 39) as follows:

PART 39—AIRWORTHINESS DIRECTIVES

1. The authority citation for part 39 continues to read as follows:

Authority: 49 U.S.C. 106(g), 40113, 44701.

§ 39.13 [Amended]

2. Section 39.13 is amended by removing Amendment 39–11651 (65 FR 16804, March 30, 2000), and by adding a new airworthiness directive (AD), to read as follows:

Bell Helicopter Textron Canada: Docket No. 2001–SW–53–AD. Supersedes AD 2000–06–10, Amendment 39–11651, Docket No. 99–SW–75–AD.

Applicability: Model 407 helicopters, serial number (S/N) 53000 through 53475 with tailboom, part number (P/N) 407–030–801–101, –105, or –107, installed, certificated in any category.

Note 1: This AD applies to each helicopter identified in the preceding applicability

provision, regardless of whether it has been otherwise modified, altered, or repaired in the area subject to the requirements of this AD. For helicopters that have been modified, altered, or repaired so that the performance of the requirements of this AD is affected, the owner/operator must request approval for an alternative method of compliance in accordance with paragraph (d) of this AD. The request should include an assessment of the effect of the modification, alteration, or repair on the unsafe condition addressed by this AD; and if the unsafe condition has not been eliminated, the request should include specific proposed actions to address it.

Compliance: Required as indicated, unless accomplished previously.

To prevent separation of the tailboom and subsequent loss of control of the helicopter, accomplish the following:

(a) Before further flight and thereafter before the first flight of each day, check the tailboom for a crack in accordance with Figure 1 of this AD. If a crack is found, remove the tailboom before further flight. An owner/operator (pilot) holding at least a private pilot certificate may perform the visual check required by this paragraph but must enter compliance with this paragraph into the helicopter records in accordance with 14 CFR 43.11 and 91.417(a)(2)(v). A pilot can perform this check because it involves only a visual check for a crack in the tailboom and is a part of a normal pilot preflight check.

BILLING CODE 4910–13–U

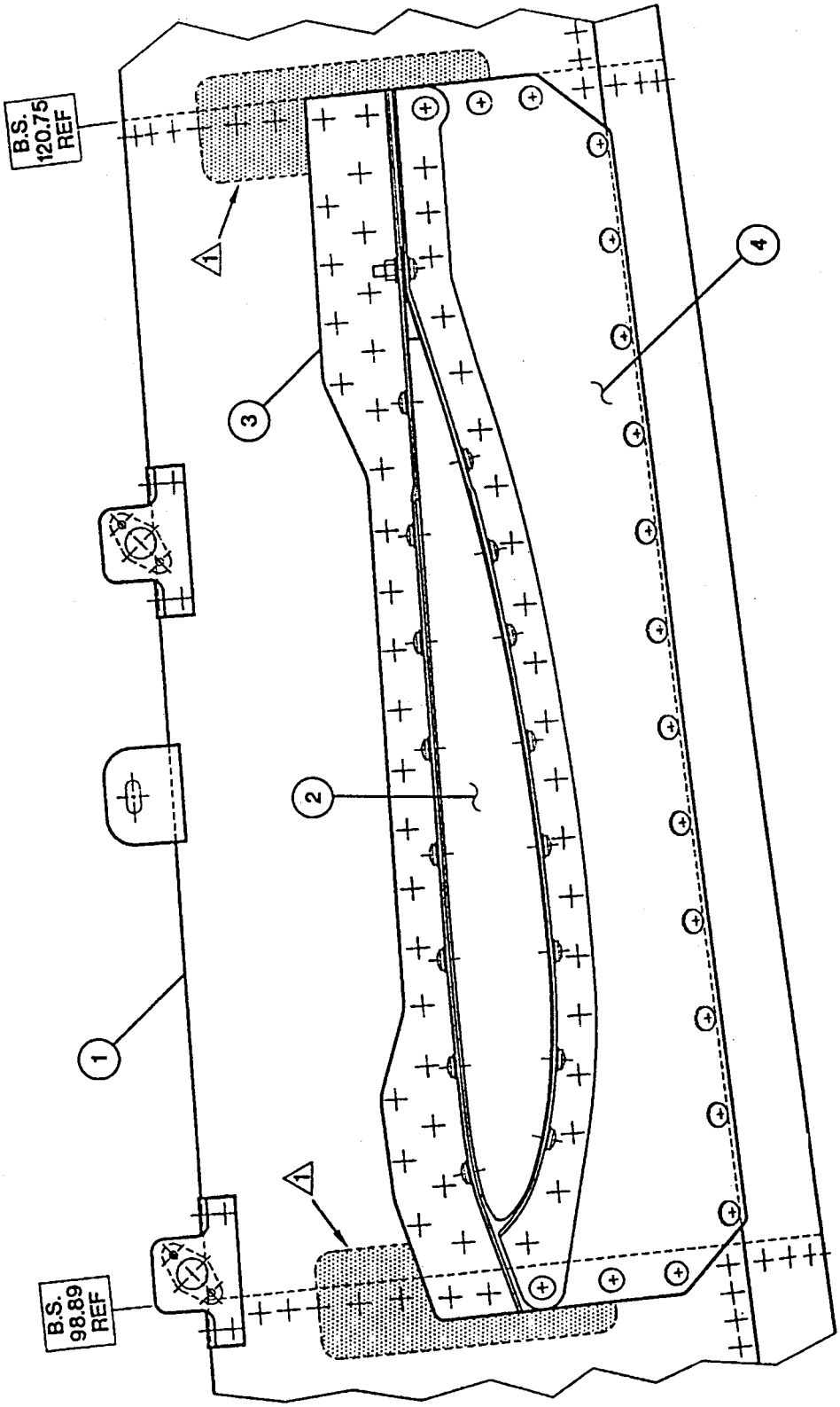

LEGEND

1. Tailboom assembly (Ref.)
2. Horizontal stabilizer (Ref.)
3. Upper support (Ref.)
4. Lower support (407-023-800-121)

NOTES

1. Examine these areas for cracks on left side of tailboom only.
2. Horizontal stabilizer not shown for clarity.

Figure 1. Preflight Check of the Tailboom

BILLING CODE 4910–13–C

(b) Within 25 hours time-in-service (TIS) and thereafter at intervals not to exceed 50 hours TIS, visually inspect any tailboom with 600 or more hours TIS for a crack using a 10x or higher magnifying glass in accordance with the Accomplishment Instructions, Part II, of Bell Helicopter Textron Alert Service Bulletin ASB 407–99–26, Revision B, dated June 14, 2001, except you are not required to contact Bell Helicopter Product Support Engineering. If a crack is found, remove the tailboom before further flight.

(c) Installing a tailboom, P/N 407–030–801–201, is terminating action for the requirements of this AD.

(d) An alternative method of compliance or adjustment of the compliance time that provides an acceptable level of safety may be used if approved by the Manager, Regulations Group, Rotorcraft Directorate, FAA. Operators shall submit their requests through an FAA Principal Maintenance Inspector, who may concur or comment and then send it to the Manager, Regulations Group.

Note 2: Information concerning the existence of approved alternative methods of compliance with this AD, if any, may be obtained from the Regulations Group.

(e) Special flight permits may be issued in accordance with 14 CFR 21.197 and 21.199 to operate the helicopter to a location where the requirements of this AD can be accomplished.

Note 3: The subject of this AD is addressed in Transport Canada AD CF–1999–17R1, dated July 24, 2001.

Issued in Fort Worth, Texas, on January 17, 2002.

David A. Downey,

Manager, Rotorcraft Directorate, Aircraft Certification Service.

[FR Doc. 02–2427 Filed 1–30–02; 8:45 am]

BILLING CODE 4910–13–U

DEPARTMENT OF THE INTERIOR

Office of Surface Mining Reclamation and Enforcement

30 CFR Part 948

[WV–095–FOR]

West Virginia Regulatory Program

AGENCY: Office of Surface Mining Reclamation and Enforcement, Interior.

ACTION: Proposed rule; public comment period and opportunity for public hearing.

SUMMARY: We, the Office of Surface Mining Reclamation and Enforcement (OSM) are announcing receipt of an amendment to the West Virginia surface mining regulatory program (the West Virginia program) under the Surface Mining Control and Reclamation Act of 1977 (SMCRA or the Act). West Virginia proposes revisions to the Code of State Regulations (CSR) and to the Code of West Virginia (W. Va. Code) as contained in Enrolled Senate Bill 689. The amendment is intended to revise the State's Surface Mine Blasting Rule and to amend the W. Va. Code concerning preblast survey requirements, site specific blasting design requirements, and liability and civil penalties in the event of property damage.

This document gives the times and locations that the West Virginia program and proposed amendment to that program are available for your inspection, the comment period during which you may submit written comments on the amendment, and the procedures that we will follow for the public hearing, if one is requested.

DATES: We will accept written comments until 4:30 p.m. (local time), on March 4, 2002. If requested, we will hold a public hearing on the amendment on February 25, 2002. We will accept requests to speak at the hearing until 4:30 p.m. (local time), on February 15, 2002.

ADDRESSES: You may mail or hand-deliver written comments and requests to speak at the hearing to Mr. Roger W. Calhoun, Director, Charleston Field Office at the address listed below.

You may review copies of the West Virginia program, this amendment, a listing of any scheduled public hearings, and all written comments received in response to this document at the addresses listed below during normal business hours, Monday through Friday, excluding holidays. You may receive one free copy of the amendment by contacting OSM's Charleston Field Office.

Mr. Roger W. Calhoun, Director, Charleston Field Office, Office of Surface Mining Reclamation and Enforcement, 1027 Virginia Street, East, Charleston, West Virginia 25301, Telephone: (304) 347–7158.

West Virginia Department of Environmental Protection, 10 McJunkin Road, Nitro, West Virginia 25143, Telephone: (304) 759–0510. The proposed amendment will be posted at the Division of Mining and Reclamation's Internet web page: http://www.dep.state.wv.us/mr.

In addition, you may review copies of the proposed amendment during regular business hours at the following locations:

Office of Surface Mining Reclamation and Enforcement, Morgantown Area Office, 75 High Street, Room 229, P.O. Box 886, Morgantown, West Virginia 26507, Telephone: (304) 291–4004. (By Appointment Only)

Office of Surface Mining Reclamation and Enforcement, Beckley Area Office, 313 Harper Park Drive, Suite 3, Beckley, West Virginia 25801, Telephone: (304) 255–5265.

FOR FURTHER INFORMATION CONTACT: Mr. Roger W. Calhoun, Director, Charleston Field Office; Telephone: (304) 347–7158.

SUPPLEMENTARY INFORMATION:

I. Background on the West Virginia Program
II. Description of the Proposed Amendment
III. Public Comment Procedures
IV. Procedural Determinations

I. Background on the West Virginia Program

Section 503(a) of the Act permits a State to assume primacy for the regulation of surface coal mining and reclamation operations on non-Federal and non-Indian lands within its borders by demonstrating that its program includes, among other things, ''* * * a State law which provides for the regulation of surface coal mining and reclamation operations in accordance with the requirements of the Act * * *; and rules and regulations consistent with regulations issued by the Secretary pursuant to the Act.'' See 30 U.S.C. 1253(a)(1) and (7). On the basis of these criteria, the Secretary of the Interior conditionally approved the West Virginia program on January 21, 1981. You can find background information on the West Virginia program, including the Secretary's findings, the disposition of comments, and conditions of approval of the West Virginia program in the January 21, 1981, **Federal Register** (46 FR 5915). You can also find later actions concerning West Virginia's program and program amendments at 30 CFR 948.10, 948.12, 948.13, 948.15, and 948.16.

II. Description of the Proposed Amendment

By letter dated November 28, 2001 (Administrative Record Number WV–1258), the WVDEP sent us a proposed amendment to its program under SMCRA (30 U.S.C. 1201 *et seq.*). The proposed amendment consists of changes to the W. Va. Code as contained in Enrolled Senate Bill 689 concerning blasting. The amendment also revises the provisions of the Surface Mine Blasting Rule at CSR 199–1. The full text of the program amendment is available for you to read at the locations listed above under **ADDRESSES.** We are also making available for public review and comment Engrossed Senate Bill 689 because it clearly shows, via underline and strikethrough, all the statutory language that has been added or deleted from the W. Va. Code as a result of Senate Bill 689. Engrossed Senate Bill

689 is substantively identical to Enrolled Senate Bill 689. Senate Bill 689 amends preblast survey requirements, site specific blasting design requirements, and provisions concerning liability and civil penalties in the event of property damage. The statutory revisions in Senate Bill 689 are also intended to address the required program amendments codified at 30 CFR 948.16(kkkk), (llll), and (mmmm).

By letter dated October 30, 2000 (Administrative Record Number WV–1187), the WVDEP submitted an amendment that added to the State regulations new Title 199, Series 1, entitled Surface Mine Blasting Rule. The regulations consisted of new blasting provisions and blasting provisions that were relocated or derived from previously approved West Virginia blasting provisions. We announced receipt of the amendment on December 5, 2000 (65 FR 75889) (Administrative Record Number WV–1190), but we have not yet published our decision on the amendment. The blasting rule submitted on October 30, 2000, and not yet approved by us, is the blasting rule that is being modified by the amendments to CSR 199–1 that we are announcing today. When we render our final decision on the amendment that we are announcing today, we will combine that decision with our decision on the blasting rule amendment that was submitted to us on October 30, 2000.

The amendment that we are announcing today is identified below.

1. W. Va. Code 22–3 Surface Coal Mining and Reclamation Act

22–3–13a Preblast survey requirements

22–3–13a(a)(3) is new, and concerns preblast survey notification for surface disturbance of underground mines.

22–3–13a(b) concerning operator notification of owners and occupants of dwellings or structures is amended.

22–3–13a(f)(14) concerning contents of a preblast survey is amended.

22–3–13a(g) concerning the submittal of preblast surveys to the office of explosives and blasting is amended.

22–3–13a(j) concerning applicability of the section 22–3–13a is amended.

22–3–22a Blasting restrictions; site specific blasting design requirement

22–3–22a(e) concerning blasting within 1000 feet of a protected structure is amended.

22–3–22a(f) concerning waiver of the blasting prohibition within 300 feet of a protected structure is amended.

22–3–30a Blasting requirements; liability and civil penalties in the event of property damage

22–3–30a(a) concerning blasting being conducted in accordance with the rules and laws established to regulate blasting is amended.

22–3–30a(b) concerning penalties where blasting was out of compliance is amended.

22–3–30a(c) concerning violation of rules that are merely administrative in nature is amended.

22–3–30a(e) concerning the penalties for production blasting conducted in violation of 22–3–22a is amended.

22–3–30a(f) concerning assessment of penalties and liabilities by the director is amended.

22–3–30a(h) concerning the applicability of section 22–3–30a is amended.

2. CSR 199–1 Surface Mining Blasting Rule

CSR 199–1–2 Definitions

199–1–2.1. The definition of Active Blasting Experience is amended.

199–1–2.4. The definition of Arbitrator is amended.

199–1–2.8. The definition of Blast Site is amended.

199–1–2.21. The definition of Contiguous or Nearly Contiguous is added.

199–1–2.26. The definition of Fly Rock is amended.

199–1–2.24. The definition of Loss Reserve is deleted.

199–1–2.37. The definition of Worked on a Drilling Crew is deleted.

199–1–2.39. The definition of Worked on a Blasting Crew is deleted.

CSR 199–1–3 Blasting

199–1–3.2. concerning blasting plans is amended at subdivisions 3.2.a., c., and d.

199–1–3.3. concerning public notice of blasting operations is amended.

199–1–3.4. concerning surface blasting activities incident to underground coal mining is amended.

199–1–3.5.c.1. concerning blast record, blasting log is amended.

199–1–3.6. concerning blasting procedures is amended.

199–1–3.7. concerning blasting control for other structures is amended.

199–1–3.8. concerning certified blasting personnel is deleted, and in its place new 199–1–3.8 concerning pre-blast surveys is added.

199–1–3.9. The title of this subsection is changed from Pre-blast Survey, to Pre-blast Surveyors. Amendments are also made to this subsection concerning the qualifications and compliance requirements of pre-blast surveyors.

199–1–3.10.d. concerning pre-blast survey review, confidentiality, is amended.

199–1–3.11. is added to provide that the director may prohibit blasting or prescribe alternative blasting limits, on a case-by-case basis, for the protection of property or the public.

CSR 199–1–4 Certification of Blasters

199–1–4.1.a., b., and c. concerning requirements, qualifications, and application for certification are amended.

199–1–4.2. concerning training is amended.

199–1–4.3. concerning the examination for certification of Examiner/Inspector and Certified Blaster is amended.

199–1–4.5. concerning conditions or practices prohibiting certification of blasters is amended.

199–1–4.6. concerning re-certification requirements for certified blasters is amended.

199–1–4.7. concerning presentation of certificate; transfer; and delegation of authority is amended at subdivision 4.7.d.

199–1–4.8. concerning violations by a certified blaster is amended.

199–1–4.9. concerning penalties is amended.

199–1–4.10. concerning hearings and appeals is amended.

CSR 199–1–5 Blasting Damage Claim

199–1–5.2. concerning filing a claim is amended.

199–1–5.3. concerning the responsibilities of the claims administrator is amended.

199–1–5.4. concerning the responsibilities of the claims adjuster is amended.

CSR 199–1–6 Arbitration for Blasting Damage Claims

199–1–6.1. concerning listing of arbitrators is amended.

199–1–6.2. concerning selection of arbitrator is amended.

199–1–6.4. concerning demand for arbitration and timeframes for arbitration is amended.

199–1–6.7. concerning presentations to the arbitrator is amended.

199–1–6.8. concerning arbitration award, fees, costs and expenses is amended.

CSR 199–1–7 Explosive Material Fee

199–1–7.2. concerning remittance fee is amended.

199–1–7.3. concerning dedication of the fee is amended.

199–1–7.7. concerning noncompliance is amended.

CSR 199–1–8 Inspections

199–1–8. This section is new and concerns inspections of any prospecting, active surface mining operation, or inactive surface mining operation.

CSR 199–1–9 Surface Mine Board

199–1–9. This section is new and concerns open meetings, appeals, and ex parte communications.

III. Public Comment Procedures

Under the provisions of 30 CFR 732.17(h), we are seeking your comments on whether the amendment satisfies the applicable program approval criteria of 30 CFR 732.15. If we approve the amendment, it will become part of the State program.

Written Comments

Send your written comments to OSM at the address given above. Your written comments should be specific, pertain only to the issues proposed in this rulemaking, and include explanations in support of your recommendation(s). We will not consider or respond to your comments when developing the final rule if they are received after the close of the comment period (*see* **DATES**). We will make every attempt to log all comments into the administrative record, but comments delivered to an address other than the Charleston Field Office may not be logged in.

Availability of Comments

We will make comments, including names and addresses of respondents, available for public review during our normal business hours. We will not consider anonymous comments. If individual respondents request confidentiality, we will honor their request to the extent allowable by law. Individual respondents who wish to withhold their names or address from public review, except for the city or town, must state this prominently at the beginning of their comments. We will make all submissions from organizations or businesses, and from individuals identifying themselves as representatives or officials of organizations or businesses, available for public inspection in their entirety.

Public Hearing

If you wish to speak at the public hearing, contact the person listed under **FOR FURTHER INFORMATION CONTACT** by 4:30 p.m. (local time), on February 15, 2002. If you are disabled and need special accommodations to attend a public hearing, contact the person listed under **FOR FURTHER INFORMATION CONTACT.** We will arrange the location and time of the hearing with those persons requesting the hearing. If no one requests an opportunity to speak, we will not hold a hearing.

To assist the transcriber and ensure an accurate record, we request, if possible, that each person who speaks at a public hearing provide us with a written copy of his or her comments. The public hearing will continue on the specified date until everyone scheduled to speak has been given an opportunity to be heard. If you are in the audience and have not been scheduled to speak and wish to do so, you will be allowed to speak after those who have been scheduled. We will end the hearing after everyone scheduled to speak and others present in the audience who wish to speak, have been heard.

Public Meeting

If only one person requests an opportunity to speak, we may hold a public meeting rather than a public hearing. If you wish to meet with us to discuss the amendment, please request a meeting by contacting the person listed under **FOR FURTHER INFORMATION CONTACT.** All such meetings are open to the public and, if possible, we will post notices of the meetings at the locations listed under **ADDRESSES.** We will make a written summary of each meeting a part of the Administrative Record.

IV. Procedural Determinations

Executive Order 12630—Takings

This rule does not have takings implications. This determination is based on the analysis performed for the counterpart Federal regulations.

Executive Order 12866—Regulatory Planning and Review

This rule is exempt from review by the Office of Management and Budget (OMB) under Executive Order 12866.

Executive Order 12988—Civil Justice Reform

The Department of the Interior has conducted the reviews required by section 3 of Executive Order 12988 and has determined that, to the extent allowable by law, this rule meets the applicable standards of subsections (a) and (b) of that section. However, these standards are not applicable to the actual language of State regulatory programs and program amendments because each such program is drafted and promulgated by a specific State, not by OSM. Under sections 503 and 505 of SMCRA (30 U.S.C. 1253 and 1255) and the Federal regulations at 30 CFR 730.11, 732.15, and 732.17(h)(10), decisions on proposed State regulatory programs and program amendments submitted by the States must be based solely on a determination of whether the submittal is consistent with SMCRA and its implementing Federal regulations and whether the other requirements of 30 CFR Parts 730, 731, and 732 have been met.

Executive Order 13132—Federalism

This rule does not have Federalism implications. SMCRA delineates the roles of the Federal and State governments with regard to the regulation of surface coal mining and reclamation operations. One of the purposes of SMCRA is to ''establish a nationwide program to protect society and the environment from the adverse effects of surface coal mining operations.'' Section 503(a)(1) of SMCRA requires that State laws regulating surface coal mining and reclamation operations be ''in accordance with'' the requirements of SMCRA. Section 503(a)(7) requires that State programs contain rules and regulations ''consistent with'' regulations issued by the Secretary pursuant to SMCRA.

Executive Order 13211—Regulations That Significantly Affect the Supply, Distribution, or Use of Energy

On May 18, 2001, the President issued Executive Order 13211 which requires agencies to prepare a Statement of Energy Effects for a rule that is (1) considered significant under Executive Order 12866, and (2) likely to have a significant adverse affect on the supply, distribution, or use of energy. Because this rule is exempt from review under Executive Order 12866 and is not expected to have a significant adverse effect on the supply, distribution, or use of energy, a Statement of Energy Effects is not required.

National Environmental Policy Act

Section 702(d) of SMCRA (30 U.S.C. 1292(d)) provides that a decision on a proposed State regulatory program provision does not constitute a major Federal action within the meaning of section 102(2)(C) of the National Environmental Policy Act (NEPA) (42 U.S.C. 4332(2)(C)). A determination has been made that such decisions are categorically excluded from the NEPA process (516 DM 8.4.A).

Paperwork Reduction Act

This rule does not contain information collection requirements that require approval by the OMB under the Paperwork Reduction Act (44 U.S.C. 3507 *et seq.*).

Regulatory Flexibility Act

The Department of the Interior has determined that this rule will not have a significant economic impact on a substantial number of small entities under the Regulatory Flexibility Act (5 U.S.C. 601 *et seq.*). The State submittal which is the subject of this rule is based upon counterpart Federal regulations for which an economic analysis was prepared and certification made that such regulations would not have a significant economic effect upon a substantial number of small entities. Accordingly, this rule will ensure that existing requirements previously promulgated by OSM will be implemented by the State. In making the determination as to whether this rule would have a significant economic impact, the Department relied upon the data and assumptions for the counterpart Federal regulation.

Small Business Regulatory Enforcement Fairness Act

This rule is not a major rule under 5 U.S.C. 804(2), the Small Business Regulatory Enforcement Fairness Act. This rule: (a) Does not have an annual effect on the economy of $100 million; (b) Will not cause a major increase in costs or prices for consumers, individual industries, geographic regions or Federal, State, or local government agencies; and (c) Does not have significant adverse effects on competition, employment, investment, productivity, innovation, or the ability of U.S.-based enterprises to compete with foreign-based enterprises.

This determination is based upon the fact that the State submittal which is the subject of this rule is based upon counterpart Federal regulations for which an analysis was prepared and a determination made that the Federal regulation was not considered a major rule.

Unfunded Mandates

This rule will not impose a cost of $100 million or more in any given year on any governmental entity or the private sector.

List of Subjects in 30 CFR Part 948

Intergovernmental relations, Surface mining, Underground mining.

Dated: January 9, 2002.

Allen D. Klein,

Regional Director, Appalachian Regional Coordinating Center.

[FR Doc. 02–2415 Filed 1–30–02; 8:45 am]

BILLING CODE 4310–05–P

DEPARTMENT OF TRANSPORTATION

Coast Guard

33 CFR Part 165

[COTP Western Alaska 02–003]

RIN 2115–AA97

Safety Zone; Ouzinkie Harbor, Ouzinkie, AK

AGENCY: Coast Guard, DOT.

ACTION: Notice of proposed rulemaking.

SUMMARY: The Coast Guard proposes to establish two temporary safety zones in Ouzinkie Harbor, Ouzinkie, Alaska. One safety zone would surround the barge SWINIMOSH which will be conducting dredging and blasting operations in the navigable waters of Ouzinkie Harbor. The second safety zone would close all of Ouzinkie Harbor when the barge SWINIMOSH conducts blasting operations. These safety zones are necessary to protect vessels transiting the area from the potential hazards associated with the dredging and blasting operations conducted by the barge SWINIMOSH.

DATES: Comments must be received on or before February 21, 2002. While our proposed rule may change based on comments received, we plan to make our final rule effective starting March 1, 2002.

ADDRESSES: You may mail comments and related material to Coast Guard Marine Safety Office, 510 L Street, Suite 100, Anchorage, AK 99501. Coast Guard Marine Safety Office Anchorage maintains the public docket for this rulemaking. Comments and material received from the public, as well as documents indicated in this preamble as being available in the docket, will become part of this docket and will be available for inspection or copying at Coast Guard Marine Safety Office Anchorage between 7:30 a.m. and 4 p.m., Monday through Friday, except Federal holidays.

FOR FURTHER INFORMATION CONTACT: Lieutenant Matt Jones, USCG Marine Safety Detachment Kodiak, at (907) 486–5918 or Lieutenant Commander Chris Woodley, USCG Marine Safety Office Anchorage, at (907) 271–6700.

SUPPLEMENTARY INFORMATION:

Request for Comments

We encourage you to participate in this rulemaking by submitting comments and related material. If you do so, please include your name and address, identify the docket number for this rulemaking (COTP Western Alaska 02–003), indicate the specific section of this document to which each comment applies, and give the reason for each comment. Please submit all comments and related material in an unbound format, no larger than 8½ by 11 inches, suitable for copying. If you would like to know they reached us, please enclose a stamped, self-addressed postcard or envelope. We will consider all comments and material received during the comment period. We may change this proposed rule in view of them.

Public Meeting

We do not now plan to hold a public meeting. But you may submit a request for a meeting by writing to Coast Guard Marine Safety Office Anchorage at the address under **ADDRESSES** explaining why one would be beneficial. If we determine that one would aid this rulemaking, we will hold one at a time and place announced by a later notice in the **Federal Register**.

Background and Purpose

The U.S. Army Corps of Engineers, through its contractor Western Marine Construction, Inc., will be conducting dredging and blasting operations on portions of Ouzinkie Harbor (Army Corps of Engineers project number DACW85–01–C–0010). This dredging project will help maintain safe navigation within Ouzinkie Harbor. A 500-yard safety zone around the barge SWINIMOSH and a safety zone closing the harbor during blasting operations is necessary to ensure the safety of the maritime community from the potential hazards associated with dredging and blasting operations.

Because we received the request late, we find that good cause exists, under 5 U.S.C. 553(d)(3), for making this rule effective less than 30 days after publication in the **Federal Register**. We have limited the comment period to 21 days so that the final rule can go into effect on March 1, 2002 in order to meet our obligation to protect the maritime community.

Discussion of Proposed Rule

The proposed safety zones would include the navigable waters of Ouzinkie Harbor within a 500-yard radius of the barge SWINIMOSH in Ouzinkie, AK, Lat. 57°55′10″ N, Long. 152°29′45″ W, and all waters of Ouzinkie Harbor, shoreline of a line drawn from 57°54′58″ N, 152°29′35″ W to 57°55′04″ N, 152°30′00″ W and ending at 57°55′12″ N, 152°30′10″ W when blasting operations occur. The blasting operations could occur any time during daylight hours starting March 1, 2002 through April 15, 2002.

These proposed safety zones are necessary to protect the maritime community from the hazards of the dredging and blasting operations. The Coast Guard will announce via broadcast notice to mariners when the blasting operations will occur. Vessels must contact the tug WALDO immediately upon entering and before transiting Ouzinkie Harbor.

Regulatory Evaluation

This proposed rule is not a ''significant regulatory action'' under section 3(f) of Executive Order 12886, Regulatory Planning and Review, and does not require an assessment of potential costs and benefits under section 6(a)(3) of that Order. The Office of Management and Budget has not reviewed it under that Order. It is not ''significant'' under the regulatory policies and procedures of the Department of Transportation (DOT) (44 FR 11040, February 26, 1979).

We expect the economic impact of this rule to be so minimal that a full Regulatory Evaluation under paragraph 10(e) of the regulatory policies and procedures of DOT is unnecessary. This finding is based on the fact that the safety zone around the barge SWINIMOSH will not restrict vessels from transiting through the harbor. Also, the safety zone closing Ouzinkie Harbor during blasting operations will be well announced so as to allow vessels ample time to plan ahead and the actual blasting operations will be short in duration. The areas will not affect maritime vessel traffic transiting the shipping channel at Ouzinkie Narrows. Vessel traffic at this time of the year is minimal.

Small Entities

Under the Regulatory Flexibility Act (5 U.S.C. 601–612), we have considered whether this proposed rule would have a significant economic impact on a substantial number of small entities. The term ''small entities'' comprises small businesses, not-for-profit organizations that are independently owned and operated and are not dominant in their fields, and governmental jurisdictions with populations of less than 50,000.

The Coast Guard certifies under 5 U.S.C. 605(b) that this proposed rule will not have a significant economic impact on a substantial number of small entities.

This proposed rule will affect the following entities, some of which may be small entities: The owners or operators of vessels intending to transit or anchor in the vicinity of Ouzinkie Harbor during the time this zone is activated.

These safety zones would not have a significant economic impact on a substantial number of small entities for the following reasons. The safety zone area around the barge SWINIMOSH will not restrict vessels from transiting Ouzinkie Harbor and vessels could pass safely around it. Also, the safety zone closing Ouzinkie Harbor during blasting operations will be well announced so as to allow vessels ample time to plan ahead and the actual blasting operations will be short in duration. Limited vessel traffic occurs in this area during these months. Before and during the effective period, we would issue a broadcast notice to mariners to warn maritime vessel traffic of the safety zones and operations occurring within the safety zone.

If you think that your business, organization, or governmental jurisdiction qualifies as a small entity and that this rule would have a significant economic impact on it, please submit a comment (*see* **ADDRESSES**) explaining why you think it qualifies and how and to what degree this rule would economically affect it.

Collection of Information

This proposed rule calls for no new collection of information under the Paperwork Reduction Act of 1995 (44 U.S.C. 3501–3520).

Federalism

A rule has implications for federalism under Executive Order 13132, Federalism, if it has a substantial direct effect on State or local governments and would either preempt State law or impose a substantial direct cost of compliance on them. We have analyzed this proposed rule under that Order and have determined that it does not have implications for federalism.

Unfunded Mandates Reform Act

The Unfunded Mandates Reform Act of 1995 (2 U.S.C. 1531–1538) requires Federal agencies to assess the effects of their discretionary regulatory actions. In particular, the Act addresses actions that may result in the expenditure by a State, local, or tribal government, in the aggregate, or by the private sector of $100,000,000 or more in any one year. Though this proposed rule will not result in such an expenditure, we do discuss the effects of this rule elsewhere in this preamble.

Taking of Private Property

This proposed rule will not effect a taking of private property or otherwise have taking implications under Executive Order 12630, Governmental Actions and Interference with Constitutionally Protected Property Rights.

Civil Justice Reform

This proposed rule meets applicable standards in sections 3(a) and 3(b)(2) of Executive Order 12988, Civil Justice Reform, to minimize litigation, eliminate ambiguity, and reduce burden.

Protection of Children

We have analyzed this proposed rule under Executive Order 13045, Protection of Children from Environmental Health Risks and Safety Risks. This rule is not an economically significant rule and does not create an environmental risk to health or risk to safety that may disproportionately affect children.

Consultation and Coordination With Indian Tribal Governments

This proposed rule does not have tribal implications under Executive Order 13175, Consultation and Coordination with Indian Tribal Governments, because it does not have a substantial direct effect on one or more Indian tribes, on the relationship between the Federal Government and Indian tribes, or on the distribution of power and responsibilities between the Federal Government and Indian tribes.

To help the Coast Guard establish regular and meaningful consultation and collaboration with Indian and Alaskan Native tribes, we published a notice in the **Federal Register** (66 FR 36361, July 11, 2001) requesting comments on how to best carry out the Order. We invite your comments on how this proposed rule might impact tribal governments, even if that impact may not constitute a ''tribal implication'' under the Order.

Energy Effects

We have analyzed this proposed rule under Executive Order 13211, Actions Concerning Regulations That Significantly Affect Energy Supply, Distribution, or Use. We have determined that it is not a ''significant energy action'' under that order because it is not a ''significant regulatory action'' under Executive Order 12866 and is not likely to have a significant adverse effect on the supply, distribution, or use of energy. It has not been designated by the Administrator of the Office of Information and Regulatory Affairs as a significant energy action. Therefore, it does not require a Statement of Energy Effects under Executive Order 13211.

Environment

We have considered the environmental impact of this rule and concluded that under figure 2–1, paragraph 34(g), of Commandant Instruction M16475.1D, this proposed rule is categorically excluded from further environmental documentation. This rule fits paragraph 34(g) as it establishes a safety zone. A ''Categorical Exclusion Determination'' is available in the docket for inspection or copying where indicated under **ADDRESSES.**

List of Subjects in 33 CFR Part 165

Harbors, Marine safety, Navigation (water), Reporting and recordkeeping requirements, Security measures, Waterways.

For the reasons discussed in the preamble, the Coast Guard proposes to amend 33 CFR part 165 as follows:

PART 165—REGULATED NAVIGATION AREAS AND LIMITED ACCESS AREAS

1. The authority citation for part 165 continues to read as follows:

Authority: 33 U.S.C. 1231; 50 U.S.C. 191, 33 CFR 1.05–1(g), 6.04–1, 6.04–6, 160.5; 49 CFR 1.46.

2. Add § 165.T17–002 to read as follows:

§ 165.T17–002 Safety Zone; Ouzinkie Harbor Dredging and Blasting Operations, Ouzinkie, Alaska.

(a) *Location*. The following areas are temporary safety zones: (1) *SWINIMOSH Barge safety zone*: All navigable waters in Ouzinkie Harbor within a 500-yard radius of the barge SWINIMOSH while it is engaged in dredging and blasting operations.

(2) *Ouzinkie Harbor safety zone*: All waters in Ouzinkie Harbor, excluding the SWINIMOSH Barge safety zone, shoreward from a line drawn from 57°54′58″ N, 152°29′35″ W to 57°55′04″ N, 152°30′00″ W and ending at 57°55′12″ N, 152°30′10″ W.

(b) *Effective period*. This section is effective from 12:01 a.m. March 1, 2002, until 9 p.m. April 15, 2002. During this effective period, blasting operations will occur in daylight hours only.

(c) *Regulations*.

(1) The general regulations contained in § 165.23 apply. The attending tug WALDO will be standing by on channels 16 and 13 to provide traffic advisories. All vessels must have permission of the Captain of the Port to enter the safety zones defined in this section. Vessels in the Ouzinkie Harbor safety zone must contact the tug WALDO before transiting Ouzinkie Harbor to determine if blasting is scheduled. If it is scheduled, no transiting in either safety zone is permitted unless authorized by the Captain of the Port.

Dated: January 16, 2002.

H.M. Hamilton,

Commander, U.S. Coast Guard, Alternate Captain of the Port, Western Alaska.

[FR Doc. 02–2276 Filed 1–30–02; 8:45 am]

BILLING CODE 4910–15–P

LIBRARY OF CONGRESS

Copyright Office

37 CFR Part 255

[Docket No. RM 2000–7B]

Mechanical and Digital Phonorecord Delivery Compulsory License

AGENCY: Copyright Office, Library of Congress.

ACTION: Extension of comment period.

SUMMARY: The Copyright Office of the Library of Congress is extending the time period for filing additional comments on its Notice of Inquiry concerning the interpretation and application of the copyright laws to certain kinds of digital transmissions of prerecorded musical works in light of an agreement between the Recording Industry Association of America, Inc., the National Music Publishers Association, and The Harry Fox Agency. The due date for reply comments remains unchanged.

DATES: Comments are due no later than February 6, 2002. Reply comments are due February 27, 2002.

ADDRESSES: If sent by mail, an original and ten copies of the reply comments should be addressed to: Copyright Arbitration Royalty Panel (CARP), P.O. Box 70977, Southwest Station, Washington, D.C. 20024. If hand delivered, the reply comments, they should be brought to: Office of the General Counsel, James Madison Building, Room LM–403, First and Independence Ave., SE, Washington, D.C. 20559–6000.

FOR FURTHER INFORMATION CONTACT: David O. Carson, General Counsel, or Tanya M. Sandros, Attorney Advisor, Copyright GC/I&R, P.O. Box 70400, Southwest Station, Washington, D.C. 20024. Telephone: (202) 707–8380. Telefax: (202) 707–8366.

SUPPLEMENTARY INFORMATION:

Background

On March 9, 2001, the Copyright Office published a Notice of Inquiry in which it requested comments on the interpretation and application of the copyright law to certain kinds of digital transmissions of musical works. 66 FR 14099 (March 9, 2001). Subsequently, the Recording Industry of America, Inc. (''RIAA''), the National Music Publishers Association (''NMPA'') and The Harry Fox Agency (''HFA'') negotiated a private agreement which addressed the application of the mechanical compulsory license, as set forth in the Copyright Act, 17 U.S.C. 115, to two specific types of services discussed in the initial Notice of Inquiry and filed the agreement with the Copyright Office as part of this proceeding.

On December 14, 2001, the Copyright Office published a request for additional comments on its March 9 Notice of Inquiry in light of the RIAA/NMPA/HFA agreement (67 FR 64783). On January 28, 2002, the date comments were due, RIAA and NMPA filed a joint request for more time to fill the requested comments. These parties stated that at the last moment they identified questions that had not been fully appreciated or addressed in their respective comments. They expressed concern that failure to address these issues could be misinterpreted and asked for a two week extension to draft more comprehensive comments. Moreover, as the parties to the Agreement that is the subject of the request for additional comments, these parties argue that ''it would benefit the record, any other commenting parties, and the public—and narrow the range of issues to be presented to the Copyright Office—if [they] were afforded an opportunity to address these questions.''

Although it is not uncommon for the Office to grant extensions when a party has made a showing of need, it is reluctant to do so when the request is made on the day of the filing deadline, since it is very disruptive and unfair to those who have met the deadline. However, because NMPA and RIAA are the parties to the agreement that is the subject of the request for additional comments, the Office believes it is important to obtain their comments in the first round. Therefore, the date for filing the requested comments has been extended. Comments are now due no later than Wednesday, February 6, 2002. There shall be no further extension of this deadline. The date for filing reply comments remains unchanged. Reply comments shall be due on Wednesday, February 27, 2002.

Dated: January 29, 2002.

David O. Carson,

General Counsel.

[FR Doc. 02–2503 Filed 1–30–02; 8:45 am]

BILLING CODE 1410–31–P

ENVIRONMENTAL PROTECTION AGENCY

40 CFR Part 52

[OH 103–1b; FRL–7114–2]

Approval and Promulgation of Implementation Plans; Ohio

AGENCY: Environmental Protection Agency (EPA).

ACTION: Proposed rule.

SUMMARY: EPA is proposing to approve portions of Ohio's March 20, 2000, submittal of sulfur dioxide regulations for various counties. In this action, EPA is proposing to approve the revised emission limits of the Ohio Administrative Code (OAC) for sources in Butler County (OAC 3745–18–15). EPA is also proposing to approve the revised emission limits for the Picway Generating Station in Pickaway County (OAC 3745–18–71), and for the Painesville Municipal Plant boiler number 5 in Lake County (OAC 3745–18–49). In addition, EPA is proposing to approve selected parts of the State's rule for compliance schedules (OAC 3745–18–03) and test methods (OAC 3745–18–04), most of which apply to the new sulfur dioxide (SO_2) emission limits in Butler and Pickaway counties. In conjunction with these actions, EPA is proposing to rescind the federally promulgated emission limitations for SO_2 for Butler, Lorain, Coshocton, Gallia, and Lake Counties, since these limits have been superseded by the approved state limits. In the final rules section of this **Federal Register**, the EPA is approving the State's request as a direct final rule without prior proposal because EPA views this action as non-controversial and anticipates no adverse comments. A detailed rationale for approving the State's request is set forth in the direct final rule. The direct final rule will become effective without further notice unless EPA receives relevant adverse written comment. Should EPA receive such comment, it will publish a timely withdrawal of the direct final rule informing the public that the direct final rule will not take effect, and such public comment received will be addressed in a subsequent final rule based on the proposed rule. If no adverse written comments are received, the direct final rule will take effect on the date stated in that document, and no further action will be taken. EPA does not plan to institute a second comment period on this action. Any parties interested in commenting on this action should do so at this time.

DATES: Written comments must be received on or before March 4, 2002.

ADDRESSES: Written comments may be mailed to J. Elmer Bortzer, Chief, Regulation Development Section, Air Programs Branch (AR–18J), Environmental Protection Agency, 77 West Jackson Boulevard, Chicago, Illinois 60604. Copies of the materials submitted by the Ohio Environmental Protection Agency may be examined during normal business hours at the following location: Environmental Protection Agency, Region 5, Air and Radiation Division, 77 West Jackson Boulevard, Chicago, Illinois, 60604.

FOR FURTHER INFORMATION CONTACT: Phuong Nguyen at (312) 886–6701.

SUPPLEMENTARY INFORMATION: For additional information see the direct final rule published in the rules section of this **Federal Register**.

Dated: November 29, 2001.

Christine Todd Whitman,

Administrator.

[FR Doc. 02–2380 Filed 1–30–02; 8:45 am]

BILLING CODE 6560–50–P

DEPARTMENT OF TRANSPORTATION

National Highway Traffic Safety Administration

49 CFR Parts 567 and 568

[Docket No. NHTSA–99–5673]

RIN 2127–AE27

Vehicles Built in Two or More Stages

AGENCY: National Highway Traffic Safety Administration (NHTSA), DOT.

ACTION: Notice of meeting.

SUMMARY: This document announces the date of the final public meeting of the Negotiated Rulemaking Committee on the development of recommended amendments to the existing NHTSA regulations (49 CFR part 567, 568) governing the certification of vehicles built in two or more stages to the Federal motor vehicle safety standards (49 CFR part 571). The Committee was established under the Federal Advisory Committee Act.

DATES: The meeting is scheduled on February 21–22, 2002.

ADDRESSES: The meeting will take place at the offices of the National Truck Equipment Association, 1300 19th Street, NW, Fifth Floor, Washington, DC 20036.

FOR FURTHER INFORMATION CONTACT:

For non-legal issues, you may call Charles Hott, Office of Crashworthiness Standards, at 202–366–4920.

For legal issues, you may call Rebecca MacPherson, Office of the Chief Counsel, at 202–366–2992.

You may send mail to both of these officials at the National Highway Traffic Safety Administration, 400 Seventh Street, SW, Washington, DC, 20590.

SUPPLEMENTARY INFORMATION:

Background

On May 20, 1999, the National Highway Traffic Safety Administration (NHTSA) published a notice of intent to establish an advisory committee (Committee) for a negotiated rulemaking to develop recommendations for regulations governing the certification of vehicles built in two or more stages. The notice requested comment on membership, the interests affected by the rulemaking, the issues that the Committee should address, and the procedures that it should follow. The reader is referred to that notice (64 FR 27499) for further information on these issues.

On December 14–15, 1999, interested parties attended a public meeting in Washington, DC. Since that time, the Advisory Committee has continued to meet, most recently in the Fall of 2000. While most of the issues before the Committee have been tentatively resolved, the issue of manufacturer exemptions remained. NHTSA agreed to not reconvene the Committee until it believed it had developed a solution that would be acceptable to all members of the Committee. This meeting of the Committee is being held to finally resolve that issue so that NHTSA can draft a Notice of Proposed Rulemaking. The meeting will be open to the public so that individuals who are not part of the Committee may attend and observe. Any person attending the Committee meetings may address the Committee, if time permits, or file statements with the Committee.

Authority: 5 U.S.C. sections 561 *et seq.*; delegation of authority at 49 CFR 1.50.

Issued on: January 25, 2002.

Stephen R. Kratzke,

Acting Associate Administrator for Safety Performance Standards.

[FR Doc. 02–2275 1–30–02; 8:45 am]

BILLING CODE 4910–59–P

DEPARTMENT OF COMMERCE

National Oceanic and Atmospheric Administration

50 CFR Part 622

[I.D. 012302E]

Fisheries of the Caribbean, Gulf of Mexico, and South Atlantic; Snapper-Grouper Fishery off the Southern Atlantic States; Amendment 13

AGENCY: National Marine Fisheries Service (NMFS), National Oceanic and Atmospheric Administration (NOAA), U.S. Department of Commerce.

ACTION: Notice of intent to prepare a draft supplemental environmental impact statement (DSEIS); request for comments.

SUMMARY: The South Atlantic Fishery Management Council (Council) intends to prepare a DSEIS to assess the impacts on the natural and human environment of the management measure proposed in its draft Amendment 13 to the Fishery Management Plan for the Snapper-Grouper Fishery of the South Atlantic Region (FMP).

DATES: Written comments on the scope of issues to be addressed in the preliminary DSEIS will be accepted through March 4, 2002.

ADDRESSES: Comments and requests for copies of the DSEIS should be sent to Robert K. Mahood, Executive Director, South Atlantic Fishery Management Council, One Southpark Circle, Suite 306, Charleston, SC 29407–4699, FAX: 843-769–4520; email: robert.mahood@noaa.gov.

FOR FURTHER INFORMATION CONTACT: Kim Iverson, Public Information Office; 843–571–4366 or kim.iverson@noaa.gov.

SUPPLEMENTARY INFORMATION: The snapper grouper fishery off the South Atlantic States in the exclusive economic zone is managed under the FMP. Following Council preparation, the FMP was approved and implemented by NMFS under the authority of the Magnuson-Stevens Fishery Conservation and Management Act (Magnuson-Stevens Act) in March of 1983. Currently, the Council is preparing draft FMP Amendment 13 and a DSEIS as an integrated part of the Amendment. The DSEIS will discuss the proposed Amendment 13 management measures in conjunction with reasonable alternatives. Each alternative will be assessed in relation to the environmental consequences with a no-action alternative considered as one of the options.

In the snapper grouper complex, 12 species are currently overfished, six species are not approaching an overfished condition nor is overfishing occurring, and the status of the remaining species is unknown. Once it is determined that overfishing is occurring, the Magnuson-Stevens Act requires that the Council take action to develop a rebuilding plan. Amendment 13 proposes the establishment of rebuilding timeframes for the overfished species within the snapper-grouper management unit.

To prevent overfishing, the Magnuson-Stevens Act and the subsequent Sustainable Fisheries Act amendments provide national standards that must be satisfied within the FMPs. The National Standards establish parameters, including maximum sustainable yield (MSY), optimum yield (OY), minimum stock size threshold (MSST), and maximum fishing mortality rate threshold (MFMT), which are used to avoid overfished situations. Currently, static spawning potential ratio proxies are used to define MSY, OY, and MFMT. In Amendment 13, the Council intends to establish values for MSY, OY, MFMT, and MSST for each of the species in the snapper-grouper management unit, contingent upon the availability of sufficient scientific information.

Additionally, the Council is considering that the following management measures be included in Amendment 13: commercial permit transfers; adjusting the harvest and/or possession of all species in the deepwater grouper/tilefish fishery; prohibiting all possession and sale of red porgy, greater amberjack, and mutton snapper during spawning season closures for that species; extending the Oculina Experimental Closed Area for an additional time period; removing queen triggerfish from the snapper-grouper management unit; increasing the recreational size limit of greater amberjack; modifying the minimum mesh size regulations for black sea bass pots; modifying current red porgy regulations; establishing a program to collect fees from the wreckfish industry; establishing a program to collect data on snapper and grouper permits as they are sold; and establishing a protocol for the collection of data for Endangered Species Act/section 7 consultation.

A scoping meeting to determine the scope of significant issues to be addressed in the DSEIS and the associated Amendment 13 will be conducted at the Council's March 4-8, 2002, meeting in Savannah, GA.

Following consideration of public comments, the Council intends to finalize and approve draft Amendment 13 to the FMP and the DSEIS for public hearings in 2002. These documents are expected to be released for public comment and filed with the Environmental Protection Agency in 2003.

Authority: 6 U.S.C. 1801 *et seq.*

Dated: January 25, 2002.

Jonathan Kerland,

Acting Director, Office of Sustainable Fisheries, National Marine Fisheries Service.

[FR Doc. 02–2301 Filed 1–30–02; 8:45 am]

BILLING CODE 3510–22–S

DEPARTMENT OF COMMERCE

National Oceanic and Atmospheric Administration

50 CFR Part 622

[I.D. 012502A]

Fisheries of the Caribbean, Gulf of Mexico, and South Atlantic; Snapper-Grouper Fishery off the Southern Atlantic States; Amendment 14

AGENCY: National Marine Fisheries Service (NMFS), National Oceanic and Atmospheric Administration (NOAA), Commerce.

ACTION: Notice of intent to prepare a draft supplemental environmental impact statement (DSEIS); request for comments.

SUMMARY: The South Atlantic Fishery Management Council (Council) intends to prepare a DSEIS to assess the impacts on the natural and human environment of the management measure proposed in its draft Amendment 14 to the Fishery Management Plan for the Snapper-Grouper Fishery of the South Atlantic Region (FMP).

DATES: Written comments on the scope of issues to be addressed in the preliminary DSEIS will be accepted through March 4, 2002.

ADDRESSES: Comments and requests for copies of the DSEIS should be sent to Robert K. Mahood, Executive Director, South Atlantic Fishery Management Council, One Southpark Circle, Suite 306, Charleston, SC 29407–4699, FAX: 843–769–4520; email: robert.mahood@noaa.gov.

FOR FURTHER INFORMATION CONTACT: Kim Iverson, Public Information Office; 843-571-4366 or kim.iverson@noaa.gov.

SUPPLEMENTARY INFORMATION: The snapper grouper fishery off the South Atlantic States in the exclusive economic zone is managed under the FMP. Following Council preparation,

the FMP was approved and implemented by NMFS under the authority of the Magnuson-Stevens Fishery Conservation and Management Act (Magnuson-Stevens Act) in March of 1983. Currently, the Council is preparing draft FMP Amendment 14 and a DSEIS as an integrated part of the Amendment. The DSEIS will discuss the proposed Amendment 14 management measures in conjunction with reasonable alternatives. Each alternative will be assessed in relation to the environmental consequences with a no-action alternative considered as one of the options.

The Council is considering the use of Marine Protected Areas (MPAs) as a management tool to protect overfished stocks and maintain the sustained existence of healthy stocks in the snapper grouper complex. MPAs serve as geographical areas with various degrees of protection from harvest including prohibition of specific gear types, seasonal spawning area closures, complete closure from fishing, and combinations of the aforementioned. Anticipated benefits from the MPAs include the protection of critical life stages, physical habitats, age structure, genetic diversity of the stock, and biodiversity. In addition to ensuring the long-term ecological viability of the fish stock and introducing a provision of insurance against uncertainty, MPAs have the potential to provide opportunities for education and research.

In Amendment 14, the Council is considering using MPAs as an additional management tool to supplement traditional management measures and promote its ultimate goal of conservation and management of fish stocks in the South Atlantic exclusive economic zone. The high species diversity and complex life history of fish within the snapper grouper management group supports a greater ecosystem approach to resource management of the stock. The Council intends that Amendment 14 center on establishing MPAs in critical habitat for overfished deepwater species including speckled hind, warsaw grouper, misty grouper, yellowedge grouper, snowy grouper, golden tilefish, sand tilefish, and blueline tilefish.

A scoping meeting to determine the scope of significant issues to be addressed in the DSEIS and the associated Amendment 14 will be conducted at the Council's March 4-8, 2002, meeting in Savannah, GA.

Following consideration of public comments, the Council intends to finalize and approve draft Amendment 14 to the FMP and the DSEIS for two rounds of public hearings, one in 2002 and one early in 2003. These documents are expected to be released for public comment and filed with the Environmental Protection Agency following the June 2003 Council meeting.

Authority: 6 U.S.C. 1801 *et seq.*

Dated: January 25, 2002.

Jonathan Kurlund,

Acting Director, Office of Sustainable Fisheries, National Marine Fisheries Service.

[FR Doc. 02–2405 Filed 1–30–02; 8:45 am]

BILLING CODE 3510–22–S

DEPARTMENT OF COMMERCE

National Oceanic and Atmospheric Administration

50 CFR Part 697

[Docket No. 010918229–1229–01; I.D. 022301A]

RIN 0648–AP15

American Lobster Fishery

AGENCY: National Marine Fisheries Service (NMFS), National Oceanic and Atmospheric Administration (NOAA), Commerce.

ACTION: Proposed rule; extension of the comment period.

SUMMARY: In a document published in the Federal Register on January 3, 2002, NMFS requested comments on proposed regulations to implement proposed management measures for the American lobster fishery in the Exclusive Economic Zone (EEZ) from Maine through North Carolina on or before February 19, 2002. This proposed rule document considers revisions to Federal American lobster regulations that are designed to be compatible with the Atlantic States Marine Fisheries Commission (Commission) Interstate Fishery Management Plan for American Lobster. The intent of this document is to announce an extension of the public comment period from February 19, 2002, to February 28, 2002.

DATES: Receipt of comments on the proposed rule is extended from February 19, 2002, to February 28, 2002.

ADDRESSES: Comments on the proposed rule should be sent to, and copies of supporting documents, including a Draft Environmental Impact Statement/ Regulatory Impact Review and an Initial Regulatory Flexibility Analysis, are available from the Director, State, Federal and Constituent Programs Office, NMFS, One Blackburn Drive, Gloucester, MA 01930. Comments will not be accepted if submitted via e-mail or the Internet. Comments regarding the collection-of-information requirements contained in the proposed rule should be sent to Harry Mears at the above address, and the Office of Information and Regulatory Affairs, Office of Management and Budget, Washington, DC 20503 (ATTN: NOAA Desk Officer).

FOR FURTHER INFORMATION CONTACT: Robert Ross, NMFS, Northeast Region, 978–281–9234.

SUPPLEMENTARY INFORMATION: As announced in the Federal Register on January 3, 2002 (67 FR 282), NMFS requested comments on proposed regulations to implement proposed management measures for the American lobster fishery in the EEZ from Maine through North Carolina on or before February 19, 2002. In a letter to the NMFS Northeast Regional Administrator dated January 7, 2002, the Commission requested an extension of the public comment period to allow for full discussion and public comment on the proposed Federal American lobster regulations at a public meeting of the Commission's American Lobster Board scheduled to occur during the week of February 18, 2002. Therefore, by this document, NMFS is extending the public comment period from February 19, 2002, to February 28, 2002. There were no changes from the proposed rule previously published.

Dated: January 25, 2002.

Jon Kurland,

Acting Director, Office of Sustainable Fisheries, National Marine Fisheries Service.

[FR Doc. 02–2404 Filed 1–30–02; 8:45 am]

BILLING CODE 3510–22–S

Notices

Federal Register

Vol. 67, No. 21

Thursday, January 31, 2002

This section of the FEDERAL REGISTER contains documents other than rules or proposed rules that are applicable to the public. Notices of hearings and investigations, committee meetings, agency decisions and rulings, delegations of authority, filing of petitions and applications and agency statements of organization and functions are examples of documents appearing in this section.

DEPARTMENT OF AGRICULTURE

Forest Service

Vegetation Management for Reforestation

AGENCY: Forest Service, USDA.

ACTION: Notice of intent to prepare a supplemental environmental impact statement.

SUMMARY: The Department of Agriculture, Forest Service, Pacific Southwest Region (Region) will prepare a supplemental environmental impact statement (SEIS) to the Region's 1988 EIS ''Vegetation Management for Reforestation'' as directed by the Court in a recent United States District Court Decision in *Californians for Alternatives to Toxics, Et Al.* v. *Michael Dombeck, Et Al.,* CIV. S–00–2016 LKK/JFM. This SEIS will analyze environmental effects at the programmatic level on animal endrocrine disruption, immunotoxicity, and neurotoxicity, associated with the use of the herbicides glyphosate and triclopyr during reforestation projects in the Region.

DATES: The public is not asked to provide any additional information at this time. A draft SEIS will be circulated for public review in March, 2002. The comment period for the draft SEIS will extend 45 days from the date its availability is published in the **Federal Register** and the Sacramento Bee, the Newspaper of Record. A final SEIS is expected to be released in May, 2002.

FOR FURTHER INFORMATION CONTACT: John Fiske, Team Leader, USDA Forest Service, 1323 Club Drive, Vallejo, CA 94592. Phone number (707) 562–8687.

SUPPLEMENTARY INFORMATION:

Background

The Region prepared a final programmatic EIS ''Vegetation Management for Reforestation'' in December, 1988, and issued a Record of Decision (ROD) in February, 1989. The EIS analyzed and disclosed environmental effects of eight alternatives, six of which involved application of up to thirteen different herbicides, including glyphosate and triclopyr. The selected alternative in the ROD established broad Regional policy as to methods that may be used to control competing vegetation during reforestation projects. This policy permits consideration of all methods at the project-specific planning level, but requires that herbicides be used only where essential to achieve the project-specific resource management objectives. This policy reflected National USDA policy at that time. The ROD also established specific restrictions on uses of certain herbicides.

A recent Court decision, based on a lawsuit filed by the Californians for Alternatives to Toxics and two other organizations opposing implementation of the Cottonwood Fire Vegetation Management Project (Sierraville Ranger District, Tahoe National Forest), ordered the Forest Service to supplement this programmatic EIS to disclose specific environmental effects. These effects are endrocrine disruption, immunotoxicity, and neurotoxicity in humans and other animals, associated with the use of glyphosate and triclopyr during reforestation projects in the Region.

Proposed Action

The Forest Service proposes to Supplement the EIS, as directed by the Court.

Scoping Process

This Notice of Intent will not initiate an additional scoping process. The Judge's Order in *Californians for Alternatives to Toxics, Et Al.* v. *Michael Dombeck, Et Al.,* CIV. S–00–2016 LKK/JFM identified the scope of the draft SEIS. No additional public comment is invited on this proposal to prepare the draft SEIS.

Decision To Be Made and Responsible Official

The Regional Forester, Pacific Southwest Region, will decide whether, and if so how, to revise the ROD for the EIS.

The responsible official is the Regional Forester, 1323 Club Drive, Vallejo, California 94592.

Coordination With Other Agencies

The Forest Service is the lead agency with the responsibility to prepare this draft SEIS. Other agencies and local governments will be invited to participate, as appropriate.

Commenting

A draft SEIS is expected to be available for public review and comment in March, 2002. The comment period for the draft SEIS will extend 45 days from the date its availability is published in the **Federal Register** and in the Sacramento Bee, the Newspaper of Record.

Comments received on the draft SEIS, including names and addresses of those who comment, will be considered part of the public record for this proposed action, and will be available for public inspection. Additionally, pursuant to 7 CFR 1.27(d), any persons may request the agency to withhold a submission from the public record by showing how the Freedom of Information (FOIA) permits such confidentiality. Persons requesting such confidentiality should be aware that, under the FOIA, confidentiality may be granted in only very limited circumstances, such as to protect trade secrets. The Forest Service will inform the requester of the Agency's decision regarding the request for confidentiality, and where the request is denied, the Agency will return the submission and notify the requester that the comments may be resubmitted with or without name and address.

The Forest Service believes that it is important to give reviewers notice of several court rulings related to public participation in the environmental review process. First, reviews of draft environmental impact statements must structure their participation in the environmental review of the proposal so that it is meaningful and alerts the agency to the reviewer's position and contentions. *Vermont Yankee Nuclear Power Corp.* v. *NRDC,* 435 U.S. 519, 533 (1978). Also, environmental objections that could be raised at the draft environmental impact statement stage, but that are not raised until after completion of the final environmental impact statement, may be waived or dismissed by the courts. *City of Angoon* v. *Hodel,* 803 F.2d 1016, 1022 (9th Cir. 1986) and *Wisconsin Heritage, Inc.* v. *Harris,* 490 F. Supp. 1334 (E.D. Wis.

1980). Because of these court rulings, it is very important that those interested in this proposed action participate by the close of the 45-day comment period so that substantive comments and objections are made available to the Forest Service at a time when the Agency can meaningfully consider them and respond to them in the final supplemental environmental impact statement.

Comments on the draft SEIS should be as specific as possible. It is also helpful if comments refer to specific pages or chapters of the draft supplemental statement. Comments may also address the adequacy of the draft SEIS. Reviewers may wish to refer to the Council on Environmental Quality Regulations for implementing the procedural provisions of the National Environmental Policy Act at 40 CFR 1503.3 in addressing these points.

Dated: January 24, 2002.

Jack A. Blackwell,

Regional Forester, Pacific Southwest Region.

[FR Doc. 02–2310 Filed 1–30–02; 8:45 am]

BILLING CODE 3410–11–M

DEPARTMENT OF AGRICULTURE

Forest Service

Olympic Provincial Advisory Committee

AGENCY: Forest Service, USDA.

ACTION: Notice of meeting.

SUMMARY: The Olympic Province Advisory Committee (OPAC) will meet on February 22, 2002. The meeting will be held at the Jamestown S'Klallam Tribal Center in Blyn, Washington. The meeting will begin at 9 a.m. and end at approximately 3 p.m. Agenda topics are: (1) Current status of key Forest issues; (2) Status update on the Resource Advisory Committees for Rural Schools and Community Self-Determination Act of 2000; (3) Vacant committee positions; (4) Open forum; and (5) Public comments.

All Olympic Province Advisory Committee Meetings are open to the public. Interested citizens are encourage to attend.

FOR FURTHER INFORMATION CONTACT: Direct questions regarding this meeting to Ken Eldredge, Province Liaison, USDA, Olympic National Forest Headquarters, 1835 Black Lake Blvd. Olympia, WA 98512–5623, (360) 956–2323 or Dale Hom, Forest Supervisor, at (360) 956–2301.

Dated: January 22, 2002.

Dale Hom,

Forest Supervisor, Olympic National Forest.

[FR Doc. 02–2305 Filed 1–30–02; 8:45 am]

BILLING CODE 3410–11–M

DEPARTMENT OF AGRICULTURE

Forest Service

Fresno County Resource Advisory Committee

AGENCY: Forest Service, USDA.

ACTION: Notice of Resource Advisory meeting.

SUMMARY: Pursuant to the authorities in the Federal Advisory Committee Act of 1972 (Pub. L. 92–463) and under the secure Rural Schools and Community Self-Determination Act of 2000 (Public Law 106–393) the Sierra and Sequoia National Forests' Resource Advisory Committee (RAC) for Fresno County will meet on February 19, 2002, 6:30–9:30 p.m. The Fresno County Resource Advisory Committee will meet at the Forest Supervisor's office Clovis, CA. The purpose of the meeting is for the Resource Advisory Committee to receive project proposals for recommendations to the Forest Supervisor for expenditure of Fresno County Title II funds.

DATES: The Fresno RAC meeting will be held on February 19, 2002. The meeting will be held from 6:30 p.m. to 3:30 p.m.

ADDRESSES: The Fresno County RAC meeting will be held at the Sierra National Forest Supervisor's office, 1600 Tollhouse Road, CA.

FOR FURTHER INFORMATION CONTACT: Sue Exline, USDA, Sierra National Forest, 1600 Tollhouse Road, Clovis, CA 93611, (559) 297–0706 ext. 4804; E-MAIL *skexline@fs.fed.us.*

SUPPLEMENTARY INFORMATION: Agenda items to be covered include: (1) Review and approve the Jan. 12, 2002 meeting notes; (2) Review the purpose of the RAC; (3) Consideration of Title II Project proposals from the public, the RAC members, the Pineridge/Kings River Districts Ranger; and the Hume Lake District Ranger; (4) Determine the date and location of the next meeting; (5) Public comment. The meeting is open to the public. Public input opportunity will be provided and individuals will have the opportunity to address the Committee at that time.

Dated: January 23, 2002.

Ray Porter,

District Ranger.

[FR Doc. 02–2285 Filed 1–30–02; 8:45 am]

BILLING CODE 3410–11–M

DEPARTMENT OF AGRICULTURE

Forest Service

North Gifford Pinchot National Forest Resource Advisory Committee Meeting Notice

AGENCY: Forest Service, USDA.

ACTION: Notice of meeting.

SUMMARY: The North Gifford Pinchot National Forest Resource Advisory Committee will meet on Tuesday, February 12, 2002, at the Lewis County Law and Justice Center (old county annex building), 345 West Main Street, Chehalis, Washington. The meeting will begin at 10 a.m. and continue until 5 p.m. The purpose of the meeting is to:

(1) Consider staffing needs,

(2) Discuss the project approval process, and

(3) Provide for a Public Open Forum.

All North Gifford Pinchot National Forest Resource Advisory Committee meetings are open to the public. Interested citizens are encouraged to attend. The ''open forum'' provides opportunity for the public to bring issues, concerns, and discussion topics to the Advisory Committee. The ''open forum'' is scheduled as part of agenda item (3) for this meeting. Interested speakers will need to register prior to the open forum period. The committee welcomes the public's written comments on committee business at any time.

FOR FURTHER INFORMATION CONTACT: Direct questions regarding this meeting to Tom Knappenberger, Public Officer, at (360) 891–5005, or written Forest Headquarters Office, Gifford Pinchot National Forest, 10600 NE. 51st Circle, Vancouver, WA 98682.

Dated: January 25, 2002.

Claire Lavendel,

Forest Supervisor.

[FR Doc. 02–2311 Filed 1–30–02; 8:45 am]

BILLING CODE 3410–11–M

DEPARTMENT OF AGRICULTURE

Forest Service

South Gifford Pinchot National Forest Resource Advisory Committee Meeting Notice

AGENCY: Forest Service, USDA.

ACTION: Notice of meeting.

SUMMARY: The South Gifford Pinchot National Forest Resource Advisory Committee will meet on Thursday, February 14, 2002, at the Skamania County Public Works Department basement located in the Courthouse

Annex, 170 N.W. Vancouver Avenue, Stevenson, Washington. The meeting will begin at 10 a.m. and continue until 5 p.m. The purpose of the meeting is to:

(1) Consider staffing needs,

(2) Discuss the project approval process, and

(3) Provide for a Public Open Forum.

All South Gifford Pinchot National Forest Resource Advisory Committee meetings are open to the public. Interested citizens are encouraged to attend. The ''open forum'' provides opportunity for the public to bring issues, concerns, and discussion topics to the Advisory Committee. The ''open forum'' is scheduled as part of agenda item (3) for this meeting. Interested speakers will need to register prior to the open forum period. The committee welcomes the public's written comments on committee business at any time.

FOR FURTHER INFORMATION CONTACT: Direct questions regarding this meeting to Tom Knappenberger, Public Affairs Officer, at (360) 891–5005, or write Forest Headquarters Office, Gifford Pinchot National Forest, 10600 NE. 51st Circle, Vancouver, WA 98682.

Dated: January 25, 2002.

Claire Lavendel,

Forest Supervisor.

[FR Doc. 02–2312 Filed 1–30–02; 8:45 am]

BILLING CODE 3410–11–M

DEPARTMENT OF AGRICULTURE

Forest Service

Hood/Willamette Resource Advisory Committee

AGENCY: Forest Service, USDA.

ACTION: Action of meeting.

SUMMARY: The Hood/Willamette Resource Advisory Committee (RAC) will meet on Thursday, February 21, 2002. The meeting is scheduled to begin at 9 a.m. and will conclude at approximately 5 p.m. The meeting will be held at the Wilsonville Chamber of Commerce and Clackamas County Regional Visitor Information Center; 29600 SW. Park Place; Wilsonville, Oregon 97070; (503) 682–0411. The tentative agenda includes: Process for Reviewing and Prioritizing Projects; Review of Title II Project Submissions; RAC Operating Expenses; Information Sharing; Public Forum.

The Public Forum is tentatively scheduled to begin at 4 p.m. Time allotted for individual presentations will be limited to 3–4 minutes. Written comments are encouraged, particularly if the material cannot be presented within the time limits for the Public Forum. Written comments may be submitted prior to the February 21st meeting by sending them to Designated Federal Official Donna Short at the address given below.

FOR FURTHER INFORMATION CONTACT: For more information regarding this meeting, contact Designated Federal Official Donna Short; Sweet Home Ranger District; 3225 Highway 20; Sweet Home, Oregon 97386; (541) 367–9220.

Dated: January 24, 2002.

Doris Tai,

Acting Deputy Forest Supervisor.

[FR Doc. 02–2313 Filed 1–30–02; 8:45 am]

BILLING CODE 3410–11–M

DEPARTMENT OF AGRICULTURE

Forest Service

Notice of Idaho Panhandle Resource Advisory Committee Meeting

AGENCY: Forest Service, USDA.

ACTION: Notice of meeting.

SUMMARY: Pursuant to the authorities in the Federal Advisory Committee Act (Pub. L. 92–463) and under the Secure Rural Schools and Community Self-Determination Act of 2000 (Pub. L. 106–393) the Idaho Panhandle National Forests' Idaho Panhandle Resource Advisory Committee will meet Friday, February 15, 2002, in Coeur d'Alene, Idaho for a business meeting. The meeting is open to the public.

DATES: February 15, 2002.

ADDRESSES: The meeting location is the Idaho Panhandle National Forests' Supervisor's Office, located at 3815 Schreiber Way, Coeur d'Alene, Idaho 83815.

FOR FURTHER INFORMATION CONTACT: Ranotta K. McNair, Forest Supervisor and Designated Federal Officer, at (208) 765–7223.

SUPPLEMENTARY INFORMATION: Agenda topics will include review of project proposals, developing criteria for project proposal review, finalizing the submission form for proposals and receiving public comment.

Dated: January 24, 2002.

Ranotta K. McNair,

Forest Supervisor.

[FR Doc. 02–2314 Filed 1–30–02; 8:45 am]

BILLING CODE 3410–11–M

DEPARTMENT OF AGRICULTURE

Natural Resources Conservation Service

Sixmile-St. Charles Watershed, Pueblo County, Colorado

AGENCY: Natural Resources Conservation Service, USDA.

ACTION: Notice of a Finding of No Significant Impact.

SUMMARY: Pursuant to Section 102(2) (C) of the National Environmental Policy Act of 1969; the Council on Environmental Quality Regulations (40 CFR part 1500); and the Natural Resources Conservation Service Regulations (7 CFR part 650); the Natural Resources Conservation Service, U.S. Department of Agriculture, gives notice that an environmental impact statement is not being prepared for the Sixmile-St. Charles Watershed Project, Pueblo County, Colorado.

FOR FURTHER INFORMATION CONTACT: Allen Green, State Conservationist, Natural Resources Conservation Service, 655 Parfet St., Lakewood, Colorado, 80215–5517, telephone (970) 544–2810.

SUPPLEMENTARY INFORMATION: The environmental assessment of this Federally assisted action indicates that the project will not cause significant local, regional, or national impacts on the environment. As a result of these findings, Allen Green, State Conservationist, has determined that the preparation and review of an environmental impact statement is not needed for this project.

The project purpose is to reduce nitrates, selenium, sediment and other pollutant loading to the Arkansas River due to ineffective irrigation water utilization. The planned works of improvement include on-farm underground irrigation pipelines, on-farm concrete irrigation ditches, and structures for water control. These enduring practices are accompanied by facilitating management practices such as Irrigation Water Management and Nutrient Management.

The Notice of a Finding of No Significant Impact (FNSI) has been forwarded to the Environmental Protection Agency and to various Federal, State and local agencies and interested parties. A limited number of copies of the FNSI are available to fill single copy requests at the above address. Basic data developed during the environmental assessment are on file and may be reviewed by contacting Allen Green.

No administration action on implementation of the proposal will be

taken until 30 days after the date of this publication in the **Federal Register**.

(This activity is listed in the Catalog of Federal Domestic Assistance under NO. 10904, Watershed Protection and Flood Prevention, and is subject to the provisions of Executive Order 12372, which requires intergovernmental consultation with State and local officials).

Dated: January 24, 2002.

Dennis Alexander,

Assistant State Conservationist.

[FR Doc. 02–2378 Filed 1–30–02; 8:45 am]

BILLING CODE 3410–16–P

COMMISSION ON CIVIL RIGHTS

Sunshine Act Notice

AGENCY: U.S. Commission on Civil Rights.

DATE AND TIME: Friday, February 8, 2002 9:30 a.m.

PLACE: U.S. Commission on Civil Rights, 624 Ninth Street, NW., Room 540, Washington, DC 20425.

STATUS:

Agenda

I. Approval of Agenda
II. Approval of Minutes of January 11, 2011 Meeting
III. Announcements
IV. Staff Director's Report
V. State Advisory Committee Appointments for Alabama, District of Columbia, Maryland, Virginia, and West Virginia
VI. Report from a Number of SAC Chairs About Activities in Their States
VII. Future Agenda Items

10 a.m.—Environmental Justice Hearing (Part II)

CONTACT PERSON FOR FURTHER INFORMATION: Les Jin, Press and Communications (202) 376–8312.

Debra A. Carr,

Deputy General Counsel.

[FR Doc. 02–2531 Filed 1–29–02; 2:17 pm]

BILLING CODE 6335–01–M

DEPARTMENT OF COMMERCE

International Trade Administration

[A–423–810]

Notice of Amended Preliminary Determination of Sales at Not Less Than Fair Value and Postponement of Final Determination: Structural Steel Beams From Luxembourg

AGENCY: Import Administration, International Trade Administration, U.S. Department of Commerce.

ACTION: Notice of amended preliminary determination of sales at not less than fair value.

EFFECTIVE DATE: January 31, 2002.

FOR FURTHER INFORMATION CONTACT: David J. Goldberger or Margarita Panayi, Import Administration, International Trade Administration, U.S. Department of Commerce, 14th Street and Constitution Avenue, NW., Washington, DC 20230; telephone: (202) 482–4136 or (202) 482–0049, respectively.

SUPPLEMENTARY INFORMATION:

The Applicable Statute

Unless otherwise indicated, all citations to the Tariff Act of 1930, as amended (''the Act''), are references to the provisions effective January 1, 1995, the effective date of the amendments made to the Act by the Uruguay Round Agreements Act (''URAA''). In addition, unless otherwise indicated, all citations to the Department of Commerce's (''Department's'') regulations are references to 19 CFR part 351 (April 2001).

Amended Preliminary Determination

We are amending the preliminary determination of sales at less than fair value for structural steel beams from Luxembourg to reflect the correction of ministerial errors made in the margin calculations in that determination. Correcting these errors results in an amended preliminary determination that sales were made at not less than fair value. We are publishing this amendment to the preliminary determination pursuant to 19 CFR 351.224(e).

Case History

On December 19, 2001, the Department preliminarily determined that structural steel beams from Luxembourg are being, or are likely to be, sold in the United States at less than fair value (63 FR 67223; December 28, 2001).

On January 2, 2002, we disclosed our calculations for the preliminary determination to counsel for ProfilARBED, S.A. (''ProfilaRBED'') and to counsel for petitioners.

On January 7, 2002, we received a submission, timely filed pursuant to 19 CFR 351.224(c)(2), from ProfilARBED alleging ministerial errors in the Department's preliminary determination. In its submission, ProfilARBED requested that these errors be corrected and an amended preliminary determination be issued reflecting these changes. We did not receive ministerial error allegations from the petitioners.

Amendment of Preliminary Determination

The Department's regulations provide that the Department will correct any significant ministerial error by amending the preliminary determination. *See* 19 CFR 351.224(e). A significant ministerial error is an error the correction of which, either singly or in combination with other errors: (1) Would result in a change of at least five absolute percentage points in, but not less than 25 percent of, the weighted-average dumping margin calculated in the original (erroneous) preliminary determination; or (2) would result in a difference between a weighted-average dumping margin of zero (or *de minimis*) and a weighted-average dumping margin of greater than *de minimis,* or vice versa. *See* 19 CFR 351.224(g).

After analyzing ProfilARBED's submission, we have determined that ministerial errors were made in the margin calculation for ProfilARBED in the preliminary determination. Specifically, (1) We inadvertently included imputed inventory carrying expenses in the calculation of the constructed export price (CEP) profit rate; (2) we inadvertently allocated CEP profit to indirect selling expenses and inventory carrying expenses incurred abroad; (3) we inadvertently deducted from CEP indirect selling expenses and inventory carrying expenses incurred abroad; (4) we did not apply an adjustment to the calculation of the variable cost of manufacturing in the third country market as discussed in the December 19, 2001, memorandum from the Office of Accounting; and (5) we inadvertently omitted billing adjustments from the calculation of the net third country market price used for normal value. *See* Memorandum to Louis Apple from The Team, dated January 16, 2002, for further discussion of ProfilARBED's ministerial errors allegations and the Department's analysis.

Pursuant to 19 CFR 351.224(g)(2), the ministerial errors acknowledged above for ProfilARBED are significant because the correction of the ministerial errors results in a difference between a weighted-average dumping margin of greater than *de minimis* and a weighted-average dumping margin of *de minimis.* Therefore, we have recalculated the margin for ProfilARBED. The Department hereby amends its preliminary determination with respect to ProfilARBED to correct these errors. In addition, as ProfilARBED is the sole respondent in this investigation, this preliminary determination is negative. Accordingly, we are terminating

suspension of liquidation of all entries of subject merchandise.

The revised weighted-average dumping margins are as follows:

Exporter/manufacturer	Weighted-average margin percentage
ProfilARBED	1.43 (*de minimis*)

Postponement of Final Determination

Pursuant to section 735(a)(2)(B) of the Act, on December 18, 2001, the petitioners requested that, in the event of a negative preliminary determination in this investigation, the Department postpone its final determination until not later than 135 days after the date of the publication of the preliminary determination in the **Federal Register**. In accordance with 19 CFR 351.210(b)(i), because our amended preliminary determination is negative and no compelling reasons for denial exist, we are granting the petitioners' request and are postponing the final determination until no later than 135 days after the publication of the Department's original preliminary determination notice in the **Federal Register** on December 28, 2002.

Suspension of Liquidation

We will instruct the Customs Service to terminate the suspension of liquidation of all entries of structural steel beams from Luxembourg, including those entries exported by ProfilARBED, and release any cash deposits, bonds, or other securities posted. These instructions will remain in effect until further notice.

International Trade Commission Notification

In accordance with section 733(f) of the Act, we have notified the International Trade Commission (''ITC'') of the amended preliminary determination. As a result of this amended preliminary determination, if our final determination is affirmative, the ITC will determine within 75 days, rather than 45 days, of our final determination whether these imports are materially injuring, or threaten material injury to, the U.S. industry.

This amended preliminary determination is published pursuant to section 777(i)(1) of the Act and 19 CFR 351.224(e).

Dated: January 24, 2002.

Faryar Shirzad,

Assistant Secretary for Import Administration.

[FR Doc. 02–2411 Filed 1–30–02; 8:45 am]

BILLING CODE 3510–DS–P

DEPARTMENT OF COMMERCE

International Trade Administration

[A–583–838]

Notice of Amended Preliminary Determination of Sales at Less Than Fair Value: Structural Steel Beams From Taiwan

AGENCY: Import Administration, International Trade Administration, Department of Commerce.

ACTION: Notice of amended preliminary determination of sales at less than fair value.

EFFECTIVE DATE: January 31, 2002.

FOR FURTHER INFORMATION CONTACT: Kate Johnson or Rebecca Trainor, Import Administration, International Trade Administration, U.S. Department of Commerce, 14th Street and Constitution Avenue, NW., Washington, DC 20230; telephone: (202) 482–4929 or (202) 482–4007, respectively.

SUPPLEMENTARY INFORMATION: Unless otherwise indicated, all citations to the Tariff Act of 1930, as amended (the Act), are references to the provisions effective January 1, 1995, the effective date of the amendments made to the Act by the Uruguay Round Agreements Act. In addition, unless otherwise indicated, all citations to the Department of Commerce's (the Department's) regulations are references to 19 CFR part 351 (April 2001).

Amended Preliminary Determination

We are amending the preliminary determination of sales at less than fair value for structural steel beams from Taiwan to reflect the correction of a ministerial error made in the margin calculations in that determination. We are publishing this amendment to the preliminary determination pursuant to 19 CFR 351.224(e).

Case History

On December 19, 2001, the Department preliminarily determined that structural steel beams from Taiwan are being, or are likely to be, sold in the United States at less than fair value (66 FR 67202, December 28, 2001).

On December 20 and 27, 2001, we disclosed our calculations for the preliminary determination to counsel for Tung Ho Steel Enterprise Corp. (Tung Ho) and Kuei Yi Industrial Co., Ltd. (Kuei Yi), respectively. On January 2, 2002, we disclosed our calculations to counsel for the petitioners.

On January 7, 2002, we received a submission, timely filed pursuant to 19 CFR 351.224(c)(2), from the petitioners alleging a ministerial error in the Department's preliminary determination. In their submission, the petitioners stated that the correction of this error would result in a significant change in the Department's preliminary determination. We did not receive ministerial error allegations from either respondent.

Amendment of Preliminary Determination

The Department's regulations provide that the Department will correct any significant ministerial error by amending the preliminary determination. *See* 19 CFR 351.224(e). A significant ministerial error is an error the correction of which, either singly or in combination with other errors: (1) Would result in a change of at least five absolute percentage points in, but not less than 25 percent of, the weighted-average dumping margin calculated in the original (erroneous) preliminary determination; or (2) would result in a difference between a weighted-average dumping margin of zero (or *de minimis*) and a weighted-average dumping margin of greater than *de minimis,* or vice versa. *See* 19 CFR 351.224(g).

After analyzing the petitioners' submission, we have determined that a ministerial error was made in the margin calculation for Kuei Yi in the preliminary determination. Specifically, we inadvertently failed to convert Kuei Yi's home market discounts and rebates into U.S. dollars for the calculation of home market net unit price.

Pursuant to 19 CFR 351.224(g)(1), the ministerial error acknowledged above for Kuei Yi is significant because the correction of the ministerial error results in a change of at least five absolute percentage points in, but not less than 25 percent of, the weighted-average dumping margin calculated in the original preliminary determination. Therefore, we have recalculated the margin for Kuei Yi. In addition, we have recalculated the ''All Others Rate.'' The Department hereby amends its preliminary determination with respect to Kuei Yi to correct this error.

The revised weighted-average dumping margins are as follows:

Exporter/manufacturer	Weighted-average margin margin percentage
Kuei Yi Industrial Co., Ltd	34.56
All Others	25.45

Suspension of Liquidation

In accordance with section 733(d)(2) of the Act, the Department will direct

the Customs Service to continue to suspend liquidation of all entries of structural steel beams from Taiwan that are entered, or withdrawn from warehouse, for consumption, on or after the date of publication of this notice in the **Federal Register**. The Customs Service shall continue to require a cash deposit or the posting of a bond equal to the estimated amount by which the normal value exceeds the U.S. price as shown above. These instructions will remain in effect until further notice.

International Trade Commission Notification

In accordance with section 733(f) of the Act, we have notified the International Trade Commission of the amended preliminary determination.

This amended preliminary determination is published pursuant to section 777(i) of the Act and 19 CFR 351.224(e).

Dated: January 24, 2002.

Faryar Shirzad,

Assistant Secretary for Import Administration.

[FR Doc. 02–2412 Filed 1–30–02; 8:45 am]

BILLING CODE 3510–DS–P

DEPARTMENT OF COMMERCE

International Trade Administration

[A–428–831]

Notice of Amended Preliminary Determination of Sales at Less Than Fair Value: Structural Steel Beams From Germany

AGENCY: Import Administration, International Trade Administration, Department of Commerce.

ACTION: Notice of amended preliminary antidumping duty determination of sales at less than fair value: structural steel beams from Germany.

EFFECTIVE DATE: January 31, 2002.

FOR FURTHER INFORMATION CONTACT: Thomas Schauer or Edythe Artman, Import Administration, International Trade Administration, U.S. Department of Commerce, 14th Street and Constitution Avenue, NW., Washington, DC 20230; telephone: (202) 482–0410 or (202) 482–3931, respectively.

The Applicable Statute and Regulations

Unless otherwise indicated, all citations to the statute are references to the provisions effective January 1, 1995, the effective date of the amendments made to the Tariff Act of 1930 (the Act) by the Uruguay Round Agreements Act (URAA). In addition, unless otherwise indicated, all citations to the Department of Commerce's (the Department's) regulations are to the provisions codified at 19 CFR part 351 (2001).

Significant Ministerial Error

The Department of Commerce (the Department) is amending the preliminary determination of sales at less than fair value in the antidumping duty investigation of structural steel beams from Germany to reflect the correction of a significant ministerial error made in the margin calculations regarding Stahlwerk Thüringen GmbH (''SWT'') in that determination, pursuant to 19 CFR 341.224(g)(1) and (g)(2). A ministerial error is defined as an error in addition, subtraction, or other arithmetic function, clerical error resulting from inaccurate copying, duplication, or the like, and any other similar type of unintentional error which the Secretary considers ministerial. See 19 CFR 351.224(f). A significant ministerial error is defined as an error, the correction of which, singly or in combination with other errors, would result in (1) a change of at least five absolute percentage points in, but not less than 25 percent of, the weighted-average dumping margin calculated in the original (erroneous) preliminary determination; or (2) a difference between a weighted-average dumping margin of zero or *de minimis* and a weighted-average dumping margin of greater than *de minimis* or vice versa. See 19 CFR 351.224(g). In this case, correction of the ministerial error results in SWT's margin becoming *de minimis*. We are publishing this amendment to the preliminary determination pursuant to 19 CFR 351.224(e). As a result of this amended preliminary determination, we have revised the antidumping rates for one respondent, SWT.

Scope of Investigation

The scope of this investigation covers doubly-symmetric shapes, whether hot- or cold-rolled, drawn, extruded, formed or finished, having at least one dimension of at least 80 mm (3.2 inches or more), whether of carbon or alloy (other than stainless) steel, and whether or not drilled, punched, notched, painted, coated, or clad. These structural steel beams include, but are not limited to, wide-flange beams (''W'' shapes), bearing piles (''HP'' shapes), standard beams (''S'' or ''I'' shapes), and M-shapes. All the products that meet the physical and metallurgical descriptions provided above are within the scope of this investigation unless otherwise excluded. The following products are outside and/or specifically excluded from the scope of this investigation: (1) Structural steel beams greater than 400 pounds per linear foot, (2) structural steel beams that have a web or section height (also known as depth) over 40 inches, and (3) structural steel beams that have additional weldments, connectors or attachments to I-sections, H-sections, or pilings; however, if the only additional weldment, connector or attachment on the beam is a shipping brace attached to maintain stability during transportation, the beam is not removed from the scope definition by reason of such additional weldment, connector or attachment.

The merchandise subject to this investigation is classified in the Harmonized Tariff Schedule of the United States (''HTSUS'') at subheadings 7216.32.0000, 7216.33.0030, 7216.33.0060, 7216.33.0090, 7216.50.0000, 7216.61.0000, 7216.69.0000, 7216.91.0000, 7216.99.0000, 7228.70.3040, and 7228.70.6000. Although the HTSUS subheadings are provided for convenience and customs purposes, the written description of the merchandise under investigation is dispositive.

Ministerial-Error Allegation

On December 19, 2001, the Department issued its affirmative preliminary determination in this proceeding. See *Notice of Preliminary Determination of Sales at Less Than Fair Value and Postponement of Final Determination: Structural Steel Beams from Germany,* 66 FR 67190 (December 28, 2001) (*Preliminary Determination*). There are two respondent manufacturers/exporters, SWT and Salzgitter AG, in this investigation.

On January 2, 2002, the Department received timely allegations of a ministerial error (in accordance with section 351.224(c)(2) of the Department's regulations) in the *Preliminary Determination* from SWT. SWT alleged that the Department inadvertently did not convert quantity adjustments for U.S. sales from pounds to metric tons. On January 7, 2002, the Department received timely allegations of ministerial errors (in accordance with 351.224(c)(2)) in the *Preliminary Determination* from the Committee for Fair Beam Imports and its individual members, Northwestern Steel and Wire Company, Nucor Corporation, Nucor-Yamato Steel Company, and TXI-Chaparral Steel Company (''the petitioners''). The petitioners alleged that (1) the Department's language for converting quantities denominated in pounds to metric tons is superfluous

and (2) the Department's calculation of indirect selling expenses is incorrect because, according to the petitioners, the Department attempted to correct for double-counting where none exists.

The Department has reviewed its preliminary calculations and agrees that the error which SWT alleged does constitute a ministerial error within the meaning of 19 CFR 351.224(f). Furthermore, we determine that this is a ministerial error which rises to the level of ''significant errors'' pursuant to 19 CFR 351.224(g)(2), and we are amending the *Preliminary Determination* to reflect the correction of this significant ministerial error made in the margin calculation for SWT in that determination, pursuant to 19 CFR 351.224(e). See the SWT Amended Preliminary Calculation Memorandum dated January 15, 2002.

The Department does not agree that the errors which the petitioners alleged constitute ministerial errors within the meaning of 19 CFR 351.224(f). The first ''error'' alleged by the petitioners does not appear to be an error at all but, rather, simply a suggestion to change the programming language. The petitioners suggested language would have no effect on the margin. The second error is a comment about our methodology for calculating indirect selling expenses. Because the methodology we used (described accurately by the petitioners) was neither inadvertent nor unintentional, this is not a ministerial error. Therefore, we have not changed our preliminary calculations pursuant to either of the petitioners' allegations.

The collection of bonds or cash deposits and suspension of liquidation will be revised accordingly and parties will be notified of this determination, in accordance with section 733(d) and (f) of the Act.

Amended Preliminary Determination

As a result of our correction of the ministerial error, we have determined that the following dumping margins apply. In accordance with section 733(d)(2) of the Act, we are directing the Customs Service to suspend liquidation of all imports of subject merchandise from Germany, except for subject merchandise produced and exported by SWT (which has a *de minimis* weighted-average margin), that are entered, or withdrawn from warehouse, for consumption on or after the date of publication of this notice in the **Federal Register**. We will instruct the Customs Service to require a cash deposit or the posting of a bond equal to the weighted-average amounts as indicated in the chart below. These suspension-of-liquidation instructions will remain in effect until further notice.

Exporter/manufacturer	Weighted-average percentage margin
SWT	0.96
Salzgitter AG	35.75
All Others	18.36

Pursuant to section 733(d)(1)(A) and section 735(c)(5)(A) of the Act, the Department normally may not include zero and *de minimis* weighted-average dumping margins and margins determined entirely under section 776 of the Act in the calculation of the ''all-others'' deposit rate. However, such rates were the only margins available in this determination. Accordingly, the Department may, pursuant to section 735(c)(5)(B) of the Act, use ''any reasonable method'' to calculate the all-others rate. In this case, the Department calculated the all-others rate by using a simple average of the rates applicable to SWT and Salzgitter AG. See *Statement of Administrative Action* accompanying H.R. 5110, H.R. Doc. No. 316, Vol. 1, 103rd Congr. 2d Sess. at 873.

International Trade Commission Notification

In accordance with section 733(f) of the Act, we have notified the ITC of our amended preliminary determination. If our final determination is affirmative, the ITC will determine before the later of 120 days after the date of the preliminary determination or 45 days after our final determination whether the domestic industry in the United States is materially injured, or threatened with material injury, by reason of imports, or sales (or the likelihood of sales) for importation, of the subject merchandise.

Public Comment

Case briefs for this investigation must be submitted to the Department no later than seven days after the date of the final verification report issued in this proceeding. Rebuttal briefs must be filed five days from the deadline date for case briefs. A list of authorities used, a table of contents, and an executive summary of issues should accompany any briefs submitted to the Department. Executive summaries should be limited to five pages total, including footnotes. Section 774 of the Act provides that the Department will hold a public hearing to afford interested parties an opportunity to comment on arguments raised in case or rebuttal briefs, provided that such a hearing is requested by an interested party. If a request for a hearing is made in this investigation, the hearing will tentatively be held two days after the rebuttal-brief deadline date at the U.S. Department of Commerce, 14th Street and Constitution Avenue, NW., Washington, DC 20230. Parties should confirm by telephone the time, date, and place of the hearing 48 hours before the scheduled time.

We will make our final determination no later than May 13, 2001.

This determination is issued and published in accordance with sections 733(f) and 777(i)(1) of the Act and 19 CFR 351.205(c).

Dated: January 24, 2002.

Faryar Shirzad,

Assistant Secretary for Import Administration.

[FR Doc. 02–2413 Filed 1–30–02; 8:45 am]

BILLING CODE 3510–DS–P

DEPARTMENT OF COMMERCE

International Trade Administration

[A–821–814]

Notice of Amended Preliminary Determination of Sales at Less Than Fair Value: Structural Steel Beams From the Russian Federation

AGENCY: Import Administration, International Trade Administration, Department of Commerce.

ACTION: Notice of amended preliminary antidumping duty determination of sales at less than fair value: structural steel beams from the Russian Federation.

EFFECTIVE DATE: January 31, 2002.

FOR FURTHER INFORMATION CONTACT: Hermes Pinilla or Richard Rimlinger, Import Administration, International Trade Administration, U.S. Department of Commerce, 14th Street and Constitution Avenue, NW., Washington, DC 20230; telephone: (202) 482–3477 or (202) 482–4477, respectively.

The Applicable Statute and Regulations

Unless otherwise indicated, all citations to the statute are references to the provisions effective January 1, 1995, the effective date of the amendments made to the Tariff Act of 1930 (the Act) by the Uruguay Round Agreements Act (URTAA). In addition, unless otherwise indicated, all citations to the Department of Commerce's (the Department's) regulations are to the provisions codified at 19 CFR part 351 (April 2001).

Significant Ministerial Error

The Department is amending the preliminary determination of sales at less than fair value in the antidumping duty investigation of structural steel beams from the Russian Federation to reflect the correction of significant ministerial error made in the margin calculations regarding Nizhny Tagil Iron and Steel Works (Tagil), pursuant to 19 CFR 341.224(g)(1) and (g)(2). A ministerial error is defined as an error in addition, subtraction, or other arithmetic function, clerical error resulting from inaccurate copying, duplication, or the like, and any other similar type of unintentional error which the Secretary considers ministerial. See 19 CFR 351.224(f). A significant ministerial error is defined as an error, the correction of which, singly or in combination with other errors, would result in (1) a change of at least five absolute percentage points in, but not less than 25 percent of, the weighted-average dumping margin calculated in the original (erroneous) preliminary determinations or (2) a difference between a weighted-average dumping margin of zero or *de minimis* and a weighted average dumping margin of greater than *de minimis* or vice versa. See 19 CFR 351.224(g). As a result of this amended preliminary determination, we have revised the antidumping rate for Tagil.

Scope of Investigation

The scope of this investigation covers doubly-symmetric shapes, whether hot- or cold- rolled, drawn, extruded, formed or finished, having at least one dimension of at least 80 mm (3.2 inches or more), whether of carbon or alloy (other than stainless) steel, and whether or not drilled, punched, notched, painted, coated, or clad. These structural steel beams include, but are not limited to, wide-flange beams (''W'' shapes), bearing piles (''HP'' shapes), standard beams (''S'' or ''I'' shapes), and M-shapes. All the products that meet the physical and metallurgical descriptions provided above are within the scope of this investigation unless otherwise excluded. The following products are outside and/or specifically excluded from the scope of this investigation: (1) Structural steel beams greater than 400 pounds per linear foot, (2) structural steel beams that have a web or section height (also known as depth) over 40 inches, and (3) structural steel beams that have additional weldments, connectors or attachments to I-sections, H-sections, or pilings; however, if the only additional weldment, connector or attachment on the beam is a shipping brace attached to maintain stability during transportation, the beam is not removed from the scope definition by reason of such additional weldment, connector or attachment.

The merchandise subject to this investigation is classified in the Harmonized Tariff Schedule of the United States (''HTSUS'') at subheadings 7216.32.0000, 7216.33.0030, 7216.33.0060, 7216.33.0090, 7216.50.0000, 7216.61.0000, 7216.69.0000, 7216.91.0000, 7216,99.0000, 7228.70.3040, and 7228.70.6000. Although the HTSUS subheadings are provided for convenience and customs purposes, the written description of the merchandise under investigation is dispositive.

Period of Investigation

The period of investigation (POI) is October 1, 2000, through March 31, 2001.

Ministerial-Error Allegation

On December 19, 2001, the Department issued its affirmative preliminary determination in this proceeding. See *Notice of Preliminary Determination of Sales at Less Than Fair Value and Postponement of Final Determination: Structural Steel Beams from the Russian Federation,* 66 FR 67197 (December 28, 2001) (*Preliminary Determination.*

On January 7, 2002, the Department received a timely allegation of a ministerial error in the *Preliminary Determination* from Tagil. Tagil alleged that because it reported its recovered by-products, scrap, and wastes values as negative values, the Department actually added these values to Tagil's factors of production in the computer program when it attempted to credit them from Tagil's factors of production. Tagil argues that the Department should revise its computer program and add these values to its factors of production so it can properly credit the recovered by-products, scrap, and wastes values. See letter from Tagil alleging a ministerial error in the *Preliminary Determination* (January 7, 2002).

On January 9, 2002, the Department received a timely allegation of ministerial errors in the *Preliminary Determination* from the petitioners. The petitioners alleged two ministerial errors: (1) The Department used the wrong numerator or denominator in calculating the POI inflator for scrap value, and (2) the Department did not include the amount for depreciation in the computer program. According to the petitioners, the Department noted in its preliminary results, that it used a depreciation expense ratio of 11.86 percent in its calculations. The petitioners allege, however, that the Department did not include the depreciation expense ratio in the computer program when calculating normal value. See letter from the petitioners alleging ministerial errors in the *Preliminary Determination* (January 9, 2002).

On January 14, 2002, we received a timely submission from Tagil rebutting the petitioners assertion that the Department's miscalculation of scrap value is a ministerial error as defined in section 351.224(f) of the Department's regulations. Tagil contends that according to section 351.224(f) of the Department's regulations, a ministerial error is limited to an ''error in addition, subtraction, or other arithmetic function, clerical error resulting from inaccurate copying, duplication, or the like, and any other similar type of unintentional error which the Secretary considers ministerial.'' Tagil argues further that the petitioners have offered no basis for their proposed revised Polish inflation rate calculation and that the Department's regulations do not permit the submission of new factual information by parties to amend the preliminary results. Therefore, Tagil requests that the Department reject the petitioners' proposed inflation calculation revision.

We have reviewed our preliminary calculations and agree that the error which Tagil alleged is ministerial within the meaning of 19 CFR 351.224(f) because we unintentionally added Tagil's by-products, scrap, and wastes values to its factors of production when we intended to credit such values from Tagil's factors of production. We also agree that the errors which the petitioners alleged are ministerial errors within the meaning of 19 CFR 351.224(f) because we inadvertently did not include the amount for depreciation in our computer program calculation of normal value and we also inflated the scrap value using an incorrect average consumer price index figure for the POI. Furthermore, we determine these are ministerial errors which rise to the level of ''significant errors'' pursuant to 19 CFR 351.224(g)(1) and (g)(2), because together these ministerial errors result in a change of at least five absolute percentage points in, and not less than 25 percent of, the weighted-average dumping margin calculated in the original (erroneous) preliminary determination. Therefore, we are amending the *Preliminary Determination* to reflect the correction of these significant ministerial errors made in the margin calculations for

Tagil in that determination, pursuant to 19 CFR 351.224(e). See Tagil's Amended Preliminary Calculation Memorandum dated January 28, 2002.

Amended Preliminary Determination

As a result of our correction of the ministerial error, we have determined that the following dumping margin apply. In accordance with section 733(d)(2) of the Act, we are directing the Customs Service to suspend liquidation of all imports of subject merchandise from the Russian Federation, that are entered, or withdrawn from warehouse, for consumption on or after the date of publication of this notice in the **Federal Register**. We will instruct the Customs Service to require a cash deposit or the posting of a bond equal to the weighted-average amount as indicated in the chart below. This suspension-of-liquidation instructions will remain in effect until further notice.

Exporter/manufacturer	Weighted-average percentage margin
Tagil	108.37
Russia-wide rate	108.37

Because Tagil is the sole respondent in this investigation and the sole Russian producer or exporter with sales or shipments of subject merchandise to the United States during the POI, the recalculated margin for Tagil also applies to the Russia-wide rate. As a result of our amendment, the Russia-wide rate has also been amended, and applies to all entries of the subject merchandise except for entries from Tagil.

International Trade Commission Notification

In accordance with section 733(f) of the Act, we have notified the ITC of our amended preliminary determination. If our final determination is affirmative, the ITC will determine before the later of 120 days after the date of the preliminary determination or 45 days after our final determination whether the domestic industry in the United States is materially injured, or threatened with material injury, by reason of imports, or sales (or the likelihood of sales) for importation, of the subject merchandise.

Public Comment

Case briefs for this investigation must be submitted to the Department no later than seven days after the date of the final verification report issued in this proceeding. Rebuttal briefs must be filed five days from the deadline date for case briefs. A list of authorities used, a table of contents, and an executive summary of issues should accompany any briefs submitted to the Department. Executive summaries should be limited to five pages total, including footnotes. Section 774 of the Act provides that the Department will hold a public hearing to afford interested parties an opportunity to comment on arguments raised in case or rebuttal briefs, provided that such a hearing is requested by an interested party. If a request for a hearing is made in this investigation, the hearing will tentatively be held two days after the rebuttal-brief deadline date at the U.S. Department of Commerce, 14th Street and Constitution Avenue, NW., Washington, DC 20230. Parties should confirm by telephone the time, date, and place of the hearing 48 hours before the scheduled time.

Interested parties who wish to request a hearing, or to participate if one is requested, must submit a written request to the Assistant Secretary for Import Administration, U.S. Department of Commerce, Room 1870, within 30 days of the publication of this notice. Requests should contain: (1) The party's name, address, and telephone number; (2) the number of participants; and (3) a list of the issues to be discussed. Oral presentations will be limited to issues raised in the briefs.

We will make our final determination no later than May 13, 2001.

This determination is issued and published in accordance with sections 733(f) and 777(i)(1) of the Act and 19 CFR 351.224(e).

Dated: January 24, 2002.

Faryar Shirzad,

Assistant Secretary for Import Administration.

[FR Doc. 02–2414 Filed 1–30–02; 8:45 am]

BILLING CODE 3510–DS–M

DEPARTMENT OF COMMERCE

National Oceanic and Atmospheric Administration

[I.D. 011402G]

North Pacific Fishery Management Council; Public Meeting

AGENCY: National Marine Fisheries Service (NMFS), National Oceanic and Atmospheric Administration (NOAA), Commerce.

ACTION: Notice of a committee meeting.

SUMMARY: The North Pacific Fishery Management Council's (Council) Halibut Subsistence Committee will meet in Anchorage, AK.

DATES: The meeting will be held on February 26, 2002.

ADDRESSES: The meeting will be held at the RurAL CAP Building, 731 Gambell Street, Anchorage, AK.

Council address: North Pacific Fishery Management Council, 605 W. 4th Ave., Suite 306, Anchorage, AK 99501–2252.

FOR FURTHER INFORMATION CONTACT: Jane DiCosimo, NPFMC, 907–271–2809.

SUPPLEMENTARY INFORMATION: The meeting will begin at 10 a.m. in the Board Room of the RurAL CAP Building, and conclude by 4:30 p.m. The committee has been tasked by the Council to provide recommendations on a proposed regulatory change to the halibut subsistence fishery regulations in Alaska that would allow proxy fishing in the halibut subsistence fishery in certain subsistence fishing areas.

Although non-emergency issues not contained in this agenda may come before this group for discussion, those issues may not be the subject of formal action during this meeting. Action will be restricted to those issues specifically identified in this notice and any issues arising after publication of this notice that require emergency action under section 305(c) of the Magnuson-Stevens Fishery Conservation and Management Act, provided the public has been notified of the Council's intent to take final action to address the emergency.

Special Accommodations

This meeting is physically accessible to people with disabilities. Requests for sign language interpretation or other auxiliary aids should be directed to Helen Allen, 907–271–2809, at least 5 working days prior to the meeting date.

Dated: January 28, 2002.

Richard W. Surdi,

Acting Director, Office of Sustainable Fisheries, National Marine Fisheries Service.

[FR Doc. 02–2406 Filed 1–30–02; 8:45 am]

BILLING CODE 3510–22–S

DEPARTMENT OF ENERGY

Federal Energy Regulatory Commission

[Docket No. EL02–55–000]

Notice of Filing

January 25, 2002.

Cogen Lyondell, Inc.
Oyster Creek Limited
Dynegy Power Corp
Baytown Energy Center, L.P.
Channel Energy Center, L.P.
Clear Lake Cogeneration, L.P.
Corpus Christi Cogeneration, L.P.

Pasadena Cogeneration, L.P.
Texas City Cogeneration, L.P.
Calpine Corporation, and Gregory Power Partners, L.P.

Take notice that on January 23, 2002, Cogen Lyondell, Inc. Oyster Creek Limited, Dynegy Power Corp., Baytown Energy Center, L.P. Channel Energy Center, L.P., Clear Lake Cogeneration, L.P., Corpus Christi Cogeneration, L.P., Pasadena Cogeneration, L.P., Texas City Cogeneration, L.P., Calpine Corporation, and Gregory Power Partners, L.P. (Texas QF's or Petitioners) tendered for filing with the Federal Energy Regulatory Commission (Commission) a petition for enforcement of PURPA against the Public Utility Commission of Texas (PUCT), American Electric Power/Central and Southwest Corporation, Texas Utilities, and Reliant, Inc.

Any person desiring to intervene or to protest this filing should file with the Federal Energy Regulatory Commission, 888 First Street, NE., Washington, DC 20426, in accordance with Rules 211 and 214 of the Commission's Rules of Practice and Procedure (18 CFR 385.211 and 385.214). Protests will be considered by the Commission in determining the appropriate action to be taken, but will not serve to make protestants parties to the proceeding. Any person wishing to become a party must file a motion to intervene. All such motions or protests should be filed on or before the comment date, and, to the extent applicable, must be served on the applicant and on any other person designated on the official service list. This filing is available for review at the Commission or may be viewed on the Commission's Web site at *http://www.ferc.gov* using the ''RIMS'' link, select ''Docket #'' and follow the instructions (call 202–208–2222 for assistance). Protests and interventions may be filed electronically via the Internet in lieu of paper; *see* 18 CFR 385.2001(a)(1)(iii) and the instructions on the Commission's Web site under the ''e-Filing'' link.

Comment Date: February 4, 2002.

C.B. Spencer,

Acting Secretary.

[FR Doc. 02–2368 Filed 1–30–02; 8:45 am]

BILLING CODE 6717–01–M

DEPARTMENT OF ENERGY

Federal Energy Regulatory Commission

[Docket No. ER02–510–000]

TPS Dell, LLC; Notice of Issuance of Order

January 25, 2002.

TPS Dell, LLC (TPS Dell) submitted for filing a tariff that provides for the sales of capacity, energy, and ancillary services at market-based rates and for the reassignment of transmission capacity. TPS Dell also requested waiver of various Commission regulations. In particular, TPS Dell requested that the Commission grant blanket approval under 18 CFR part 34 of all future issuances of securities and assumptions of liability by TPS Dell.

On January 22, 2002, pursuant to delegated authority, the Director, Office of Markets, Tariffs and Rates-Central, granted requests for blanket approval under Part 34, subject to the following:

Any person desiring to be heard or to protest the blanket approval of issuances of securities or assumptions of liability by TPS Dell should file a motion to intervene or protest with the Federal Energy Regulatory Commission, 888 First Street, NE., Washington, DC 20426, in accordance with rules 211 and 214 of the Commission's rules of practice and procedure (18 CFR 385.211 and 385.214).

Absent a request to be heard in opposition within this period, TPS Dell is authorized to issue securities and assume obligations or liabilities as a guarantor, indorser, surety, or otherwise in respect of any security of another person; provided that such issuance or assumption is for some lawful object within the corporate purposes of TPS Dell, compatible with the public interest, and is reasonably necessary or appropriate for such purposes.

The Commission reserves the right to require a further showing that neither public nor private interests will be adversely affected by continued approval of TPS Dell's issuances of securities or assumptions of liability.

Notice is hereby given that the deadline for filing motions to intervene or protests, as set forth above, is February 21, 2002.

Copies of the full text of the Order are available from the Commission's Public Reference Branch, 888 First Street, NE., Washington, DC 20426. The Order may also be viewed on the Internet at *http://www.ferc.fed.us/online/rims.htm* (call 202–208–2222 for assistance). Comments, protests, and interventions may be filed electronically via the internet in lieu of paper. See, 18 CFR 385.2001(a)(1)(iii) and the instructions on the Commission's web site at *http://www.ferc.fed.us/efi/doorbell.htm.*

C.B. Spencer,

Acting Secretary.

[FR Doc. 02–2290 Filed 1–30–02; 8:45 am]

BILLING CODE 6717–01–P

DEPARTMENT OF ENERGY

Federal Energy Regulatory Commission

[Docket No. ER02–501–000]

Great Northern Paper, Inc.; Notice of Issuance of Order

January 25, 2002.

Great Northern Paper, Inc. (Great Northern) submitted for filing a rate schedule that provides for the sale of capacity, energy, and/or ancillary services at market-based rates and for the reassignment of transmission capacity. Great Northern also requested waiver of various Commission regulations. In particular, Great Northern requested that the Commission grant blanket approval under 18 CFR Part 34 of all future issuances of securities and assumptions of liability by Great Northern.

On January 22, 2002, pursuant to delegated authority, the Director, Office of Markets, Tariffs and Rates-Central, granted requests for blanket approval under Part 34, subject to the following:

Any person desiring to be heard or to protest the blanket approval of issuances of securities or assumptions of liability by Great Northern should file a motion to intervene or protest with the Federal Energy Regulatory Commission, 888 First Street, N.E., Washington, D.C. 20426, in accordance with Rules 211 and 214 of the Commission's Rules of Practice and Procedure (18 CFR 385.211 and 385.214).

Absent a request to be heard in opposition within this period, Great Northern is authorized to issue securities and assume obligations or liabilities as a guarantor, indorser, surety, or otherwise in respect of any security of another person; provided that such issuance or assumption is for some lawful object within the corporate purposes of Great Northern, compatible with the public interest, and is reasonably necessary or appropriate for such purposes.

The Commission reserves the right to require a further showing that neither public nor private interests will be adversely affected by continued

approval of Great Northern's issuances of securities or assumptions of liability.

Notice is hereby given that the deadline for filing motions to intervene or protests, as set forth above, is February 21, 2002.

Copies of the full text of the Order are available from the Commission's Public Reference Branch, 888 First Street, N.E., Washington, D.C. 20426. The Order may also be viewed on the Internet at *http://www.ferc.fed.us/online/rims.htm* (call 202–208–2222 for assistance). Comments, protests, and interventions may be filed electronically via the internet in lieu of paper. See, 18 CFR 385.2001(a)(1)(iii) and the instructions on the Commission's web site at *http://www.ferc.fed.us/efi/doorbell.htm.*

C.B. Spencer,

Acting Secretary.

[FR Doc. 02–2289 Filed 1–30–02; 8:45 am]

BILLING CODE 6717–01–P

DEPARTMENT OF ENERGY

Federal Energy Regulatory Commission

[Project No. 184–065 California]

El Dorado Irrigation District; Notice of Public Meetings

January 25, 2002.

The Federal Energy Regulatory Commission (Commission) is reviewing the application for a new license for the El Dorado Project (FERC No. 184), which was filed on February 22, 2000. The El Dorado Project, licensed to the El Dorado Irrigation District (EID), is located on the South Fork American River, in El Dorado, Alpine, and Amador Counties, California. The project occupies lands of the Eldorado National Forest.

The EID, several state and federal agencies, and several non-governmental agencies have asked the Commission for time to work collaboratively with a facilitator to resolve certain issues relevant to this proceeding. These meetings are a part of that collaborative process. On Monday, February 11, there will be a meeting of the aquatics-hydrology workgroup. On Tuesday, February 12, the recreation-socioeconomics-visual resources workgroup will meet. The meetings will focus on further defining interests and the development of strategies to meet objectives. We invite the participation of all interested governmental agencies, non-governmental organizations, and the general public in this meeting.

Both meetings will be held from 9 am until 4 pm in the Sacramento Marriott, located at 11211 Point East Drive, Rancho Cordova, California.

For further information, please contact Elizabeth Molloy at (202) 208–0771 or John Mudre at (202) 219–1208.

C.B. Spencer,

Acting Secretary.

[FR Doc. 02–2291 Filed 1–30–02; 8:45 am]

BILLING CODE 6717–01–P

DEPARTMENT OF ENERGY

Federal Energy Regulatory Commission

[Docket No. EL01–122–001, et al.]

PJM Interconnection, L.L.C., et al.; Electric Rate and Corporate Regulation Filings

January 25, 2002.

Take notice that the following filings have been made with the Commission. Any comments should be submitted in accordance with Standard Paragraph E at the end of this notice.

1. PJM Interconnection, L.L.C.

[Docket No. EL01–122–001]

Take notice that on January 22, 2002, PJM Interconnection, L.L.C. (PJM) tendered for filing, pursuant to the Commission's December 20, 2001 ''Order Requiring the Filing of New Oversight Measures and Terminating Investigation'' and section 206 of the Federal Power Act, revisions to the PJM Open Access Transmission Tariff, the Amended and Restated Operating Agreement of PJM Interconnection, L.L.C., and the PJM Transmission Owners Agreement to implement the transmission oversight procedures and practices described by PJM in its November 2, 2001 transmission oversight report in Docket No. EL01–122–000.

Copies of this filing have been served on all PJM Members and the state electric regulatory commissions in the PJM control area.

Comment Date: February 12, 2002.

2. International Transmission Company

[Docket Nos. ER01–3000–003, RT01–101–003 and, EC01–146–003]

Take notice that on January 22, 2002, International Transmission Company (International Transmission) and DTE Energy Company tendered a filing in compliance with an order of the Federal Energy Regulatory Commission (Commission) issued on December 20, 2001, in the above-referenced dockets. The December 20 Order directs Applicants to submit a final updated list of all jurisdictional facilities, together with information about their customers, and any contracts, tariffs, and service agreements.

Comment Date: February 12, 2002.

3. Duke Energy Washington, LLC

[Docket No. ER02–795–000]

Take notice that on January 18, 2002, Duke Energy Washington, LLC (Duke Washington) tendered for filing pursuant to section 205 of the Federal Power Act its proposed FERC Electric Tariff No. 1.

Duke Washington seeks authority to sell energy and capacity, as well as ancillary services, at market-based rates, together with certain waivers and preapprovals. Duke Washington also seeks authority to sell, assign, or transfer transmission rights that it may acquire in the course of its marketing activities. Duke Washington seeks an effective date 60 days from the date of filing for its proposed rate schedules.

Comment Date: February 8, 2002.

4. California Independent System Operator Corporation

[Docket No. ER02–798–000]

Take notice that the California Independent System Operator Corporation, (ISO) on January 18, 2002, tendered for filing a Participating Generator Agreement between the ISO and Gilroy Energy Center, LLC for acceptance by the Commission.

The ISO states that this filing has been served on Gilroy Energy Center, LLC and the California Public Utilities Commission. The ISO is requesting waiver of the 60-day notice requirement to allow the Participating Generator Agreement to be made effective September 7, 2001.

Comment Date: February 8, 2002.

5. Occidental Energy Marketing, Inc.

[Docket No. ER02–799–000]

Take notice that on January 18, 2002, Occidental Energy Marketing, Inc. (OEMI) petitioned the Federal Energy Regulatory Commission (Commission) for acceptance of Occidental Energy Marketing, Inc. FERC Electric Rate Schedule No. 1; the issuance of certain blanket authorizations, and an authorization to sell electric capacity and energy at market-based rates; and the waiver of certain Commission regulations.

OEMI intends to engage in wholesale electric capacity and energy purchases and sales as an electric power marketer. OEMI is not in the business of electric power generation or transmission. OEMI is affiliated, however, with four ''qualifying facilities'' under PURPA and proposes to market some affiliate-

generated electric power. OEMI is a wholly owned subsidiary of Occidental Petroleum Corporation, which, through affiliates, explores for, develops, produces and markets crude oil and natural gas and manufactures and markets a variety of basic chemicals as well as specialty chemicals.

Comment Date: February 8, 2002.

6. Michigan Electric Transmission Company and Consumers Energy Company

[Docket No. ER02–800–000]

Take notice that on January 18, 2002, Consumers Energy Company (Consumers) and Michigan Electric Transmission Company (Michigan Transco) tendered for filing a Second Supplemental Notice of Succession and a Revised Rate Schedule for Consumers related to the transfer of transmission assets from Consumers to Michigan Transco. The Second Supplemental Notice of Succession, and Revised Rate Schedule are to become effective April 1, 2001.

A full copy of the filing was served upon the Michigan Public Service Commission, and Customers Michigan South Central Power Authority, Michigan Public Power Authority and Wolverine Power Supply Cooperative were sent the Notice of Succession and related materials.

Comment Date: February 8, 2002.

7. Maclaren Energy Inc.

[Docket No. ER02–801–000]

Take notice that on January 18, 2002, Maclaren Energy Inc. (Maclaren) submitted for filing with the Federal Energy Regulatory Commission (Commission) a letter approving its membership with the Western Systems Power Pool (WSPP). Maclaren requests that the Commission allow its membership in the WSPP to become effective on January 21, 2002.

Maclaren states that a copy of this filing has been provided to the WSPP Executive Committee, the General Counsel, and the members of the WSPP.

Comment Date: February 8, 2002.

8. Commonwealth Edison Company

[Docket No. ER02–802–000]

Take notice that on January 18, 2002, Commonwealth Edison Company (ComEd) submitted for filing an executed Dynamic Scheduling Agreement (DSA) with Alliant Energy (Alliant) under the terms of ComEd's Open Access Transmission Tariff (OATT). The DSA provides the necessary arrangements for Dynamic Scheduling under a Service Agreement for firm point-to-point transmission service from ComEd to Alliant for the period January 1, 2002 to April 1, 2003.

ComEd requests an effective date of January 1, 2002, and accordingly seeks waiver of the Commission's notice requirements. A copy of this filing was served on Alliant.

Comment Date: February 8, 2002.

9. Southwest Power Pool, Inc.

[Docket No. ER02–803–000]

Take notice that on January 18, 2002 Southwest Power Pool, Inc. (SPP) submitted for filing four executed service agreements for Firm Point-to-point Transmission Service with Southwestern Public Service Company d.b.a. Xcel Energy (Transmission Customer), as Service Agreements No. 598 through 601.

SPP seeks an effective date of March 1, 2002 for Service Agreement 598, and an effective date of January 1, 2002 for Service Agreement Nos. 599 through 601. A copy of this filing was served on the Transmission Customer.

Comment Date: February 8, 2002.

10. Wisconsin Power and Light Company

[Docket No. ER02–804–000]

Take notice that on January 18, 2002, Wisconsin Power and Light Company (WPL), tendered for filing a Service Agreement with WPPI and request to terminate Service Agreement No. 39 under FERC Electric Tariff, Original Volume No. 5. WPL indicates that copies of the filing have been provided to WPPI, Prairie du Sac and the Public Service Commission of Wisconsin.

Comment Date: February 8, 2002.

11. Wisconsin Electric Power Company

[Docket No. ER02–805–000]

Take notice that on January 18, 2002, Wisconsin Electric Power Company (Wisconsin Electric) tendered for filing a fully executed Master Power Purchase and Sale Agreement (Master Agreement), designated as FERC Electric Rate Schedule No. 109, between Wisconsin Electric and Ameren Energy Marketing Company. The Master Agreement sets forth the general terms and conditions pursuant to which Wisconsin Electric and Ameren Energy Marketing Company will enter into transactions for the purchase and sale of electric capacity, energy, or other product related thereto. Wisconsin Electric requests that this Master Agreement become effective immediately.

Comment Date: February 8, 2002.

12. Wisconsin Electric Power Company

[Docket No. ER02–806–000]

Take notice that on January 18, 2002, Wisconsin Electric Power Company (Wisconsin Electric) tendered for filing a fully executed Master Power Purchase and Sale Agreement (Master Agreement), designated as FERC Electric Rate Schedule No. 108, between Wisconsin Electric and Ameren Energy Inc., as agent for and on behalf of Union Electric Company d/b/a Amerenue, and Ameren Energy Generating Company (Ameren). The Master Agreement sets forth the general terms and conditions pursuant to which Wisconsin Electric and Ameren will enter into transactions for the purchase and sale of electric capacity, energy, or other product related thereto. Wisconsin Electric requests that this Master Agreement become effective immediately.

Comment Date: February 8, 2002.

13. California Independent System Operator Corporation

[Docket No. ER02–807–000]

Take notice that on January 18, 2002, the California Independent System Operator Corporation, (ISO) tendered for filing with the Federal Energy Regulatory Commission (Commission) a Meter Service Agreement for ISO Metered Entities between the ISO and Gilroy Energy Center, LLC for acceptance by the Commission.

The ISO states that this filing has been served on Gilroy Energy Center, LLC and the California Public Utilities Commission. The ISO is requesting waiver of the 60-day notice requirement to allow the Meter Service Agreement for ISO Metered Entities to be made effective September 7, 2001.

Comment Date: February 8, 2002.

14. Northern States Power Company, (Minnesota) and Northern States Power Company (Wisconsin)

[Docket No. ER02–808–000]

Take notice that on January 22, 2002, Northern States Power Company and Northern States Power Company (Wisconsin) jointly tendered for filing revised tariffs sheets to NSP Electric Rate Schedule FERC No. 2, contained in Xcel Energy Operating Companies FERC Electric Tariff, Original Volume Number 3. The revised tariff sheets provide the annual update to Exhibits VII, VIII, and IX of the ''Restated Agreement to Coordinate Planning and Operations and Interchange Power and Energy between Northern States Power Company (Minnesota) and Northern States Power Company (Wisconsin),'' accepted for filing in Docket No. ER01–1014–000.

The NSP Companies request an effective date of January 1, 2002, without suspension. The NSP Companies state that a copy of the filing has been served upon the State Commissions of Michigan, Minnesota, North Dakota, South Dakota and Wisconsin.

Comment Date: February 12, 2002.

15. Pacific Gas and Electric Company

[Docket No. ER02–810–000]

Take notice that on January 22, 2002, Pacific Gas and Electric Company (PG&E) tendered for filing an amendment letter agreement (Amendment) to the Generator Special Facilities and Interconnection Agreements between Geysers Power Company, LLC and PG&E (collectively, Parties). The Amendment extends the term of the Agreements. The filing does not modify any rate levels.

The Agreements were originally accepted for filing by the Commission in FERC Docket No. ER00–3294–001 and designated as Service Agreement No. 1 under FERC PG&E Electric Tariff, Sixth Revised Volume No. 5.

Copies of this filing were served upon Geysers Power Company, LLC, the California Independent System Operator Corporation, and the California Public Utilities Commission.

Comment Date: February 12, 2002.

16. Renewable Energy Resources, LLC

[Docket No. ER02–809–000]

Take notice that on January 22, 2002, Renewable Energy Resources, LLC, a Michigan limited liability company, (Applicant) petitioned the Federal Energy Regulatory Commission (Commission) for acceptance of Renewable Energy Resources, LLC's FERC Electric Rate Schedule No. 1; the granting of certain blanket authorizations, including the authority to sell electric energy and capacity to wholesalers at market-based rates; and the waiver of certain Commission regulations.

Applicant intents to engage in wholesale electric power and energy purchases and sales as a marketer. Applicant is not in the business of generating or transmitting electric power. Applicant neither owns or controls any transmission or operating generational facilities, or has a franchised service area for the sale of electricity to captive customers. Applicant is a privately owned company, and is not engaged in any other businesses.

Applicant does not currently sell power to any person pursuant to the proposed Rate Schedule. A copy of its filing, however, has been served on the Michigan Public Service Commission as a courtesy.

Comment Date: February 12, 2002.

17. Kansas Gas and Electric Company

[Docket No. ER02–811–000]

Take notice that on January 22, 2002, Western Resources, Inc. (d.b.a. Westar Energy), on behalf of its wholly-owned subsidiary Kansas Gas and Electric Company (KGE) (d.b.a. Westar Energy), submitted for filing an Order 614 compliant version of KGE's Unit Participation Power Agreement with Midwest Energy, Inc. (MWE), FERC No. 184, dated November 17, 1993. The purpose of this filing is to amend the previously signed Agreement between the parties to allow certain transactions to be priced at rates below those established by the Agreement as mutually agreed by the parties. This agreement is proposed to be effective January 1, 2002.

Copies of the filing were served upon MWE and the Kansas Corporation Commission.

Comment Date: February 12, 2002.

18. New England Power Company

[Docket No. ER02–812–000]

Take notice that on January 22, 2002, New England Power Company (NEP) submitted Original Service Agreement No. 210 for Firm Local Generation Delivery Service between NEP and Wheelabrator North Andover Inc. under NEP's open access transmission tariff—FERC Electric Tariff, Second Revised Volume No. 9.

Comment Date: February 12, 2002.

19. Wolverine Power Supply Cooperative, Inc.

[Docket No. ER02–813–000]

Take notice that on January 22, 2002, Wolverine Power Supply Cooperative, Inc., submitted for filing proposed changes to its First Revised Rate Schedule FERC No. 4—Wholesale Service to Member Distribution Cooperatives. The proposed change consists of a First Revised Page No. 14.00, Rider ''SB'', to replace the Original Page No. 14.00, Rider ''SB.'' Wolverine requests an effective date of February 1, 2002, for this First Revised Page No. 14.00.

Wolverine states that a copy of this filing has been served upon its member cooperatives: Cherryland Electric Cooperative, Great Lakes Energy, Presque Isle Electric & Gas Co-op, HomeWorks Tri-County Electric Cooperative, Wolverine Power Marketing Cooperative, and the Michigan Public Service Commission.

Comment Date: February 12, 2002.

20. Southwest Power Pool, Inc.

[Docket No. ER02–796–000]

Take notice that on January 22, 2002, Southwest Power Pool, Inc. (SPP) submitted for filing an executed service agreement for Firm Point-to-Point transmission Service with UtiliCorp United, Inc. (Transmission Customer).

SPP seeks an effective date of January 1, 2002 for this service agreement. A copy of this filing was served on the Transmission Customer.

Comment Date: February 12, 2002.

21. Astoria Energy LLC

[Docket No. ER01–3103–001]

Take notice that on January 22, 2002, Astoria Energy LLC (Astoria Energy) filed with the Federal Energy Regulatory Commission (Commission) an Amendment (Amendment) to its Petition for Acceptance of Initial Rate Schedule, Waivers & Blanket Authority, Docket No. ER01–3103–000. Astoria Energy's Amendment is filed pursuant to section 205 of the Federal Power Act and Rules 205 and 207 of the Commission's rules of Practice.

Comment Date: February 12, 2002.

Standard Paragraph

E. Any person desiring to be heard or to protest such filing should file a motion to intervene or protest with the Federal Energy Regulatory Commission, 888 First Street, NE, Washington, DC 20426, in accordance with Rules 211 and 214 of the Commission's Rules of Practice and Procedure (18 CFR 385.211 and 385.214). All such motions or protests should be filed on or before the comment date. Protests will be considered by the Commission in determining the appropriate action to be taken, but will not serve to make protestants parties to the proceeding. Any person wishing to become a party must file a motion to intervene. Copies of this filing are on file with the Commission and are available for public inspection. This filing may also be viewed on the Web at *http://www.ferc.gov* using the ''RIMS'' link, select ''Docket#'' and follow the instructions (call 202–208–2222 for assistance). Comments, protests and interventions may be filed electronically via the Internet in lieu of paper. *See*, 18 CFR 385.2001(a)(1)(iii) and the instructions on the Commission's Web site under the ''e-Filing'' link.

C.B. Spencer,

Acting Secretary.

[FR Doc. 02–2367 Filed 1–30–02; 8:45 am]

BILLING CODE 6717–01–P

DEPARTMENT OF ENERGY

Federal Energy Regulatory Commission

[Docket No. CP02–45–000]

Texas Eastern Transmission. L.P.; Notice of Intent To Prepare an Environmental Assessment for the Proposed Hanging Rock Lateral Project and Request for Comments on Environmental Issues

January 25, 2002.

The staff of the Federal Energy Regulatory Commission (FERC or Commission) will prepare an environmental assessment (EA) that will discuss the environmental impacts of the Hanging Rock Lateral Project involving construction and operation of facilities by Texas Eastern Transmission, L.P. (Texas Eastern) in (Scioto and Lawrence Counties, Ohio).[1] These facilities would consist of about 9.6 miles of 24-inch-diameter pipeline. This EA will be used by the Commission in its decision-making process to determine whether the project is in the public convenience and necessity.

If you are a landowner receiving this notice, you may be contacted by a pipeline company representative about the acquisition of an easement to construct, operate, and maintain the proposed facilities. The pipeline company would seek to negotiate a mutually acceptable agreement. However, if the project is approved by the Commission, that approval conveys with it the right of eminent domain. Therefore, if easement negotiations fail to produce an agreement, the pipeline company could initiate condemnation proceedings in accordance with state law.

A fact sheet prepared by the FERC entitled ''An Interstate Natural Gas Facility On My Land? What Do I Need To Know?'' was attached to the project notice Texas Eastern provided to landowners. This fact sheet addresses a number of typically asked questions, including the use of eminent domain and how to participate in the Commission's proceedings. It is available for viewing on the FERC Internet website (*www.ferc.gov*).

Summary of the Proposed Project

Texas Eastern wants to construct a pipeline lateral to provide service to the Hanging Rock Power Plant, a 1,240 megawatt gas-fired electric power plant (Hanging Rock Plant) which will be constructed in Lawrence County, Ohio, by Duke Energy Hanging Rock, L.L.C. The pipeline facilities would allow Texas Eastern to provide a total of 250,000 dekatherms per day (dth/d) of transportation service to the Hanging Rock Plant. Texas Eastern proposes to have these facilities in service by November 1, 2002. Texas Eastern seeks authority to construct and operate:

- 9.6 miles of 24-inch-diameter pipeline extending from milepost (MP) 562.18 on Texas Eastern's 30-inch-diameter Line Nos. 10 and 15 (the Texas Eastern Interconnect) in Scioto County, Ohio, to the Hanging Rock Plant in Lawrence County, Ohio;
- 150 feet of 20-inch-diameter pipeline at the Texas Eastern Interconnect;
- 150 feet of 12-inch-diameter pipeline at MP 2.1 on the Hanging Rock Lateral to interconnect with the existing Tennessee Gas Pipeline Company (Tennessee) pipeline Scioto County, Ohio;
- 2 new metering and regulating (M&R) stations (the Tennessee Interconnect) at MP 2.1 in Scioto County, Ohio, where the Hanging Rock Lateral and the Tennessee pipeline cross;
- the Hanging Rock Plant M&R station on the Hanging Rock Plant property at MP 9.6 in Lawrence County, Ohio; and
- appurtenant facilities.

The location of the project facilities is shown in appendix 2.[2]

Land Requirements for Construction

Construction of the proposed facilities would require about 146.9 acres of land including the construction right-of-way, extra work spaces, access roads, and pipeyards. Following construction, about 0.86 acre would be maintained as new aboveground facility sites. The remaining 146.04 acres of land would be restored and allowed to revert to its former use. About 57.8 acres of this total would be within the permanent pipeline right-of-way.

The EA Process

The National Environmental Policy Act (NEPA) requires the Commission to take into account the environmental impacts that could result from an action whenever it considers the issuance of a Certificate of Public Convenience and Necessity. NEPA also requires us[3] to discover and address concerns the public may have about proposals. We call this ''scoping''. The main goal of the scoping process is to focus the analysis in the EA on the important environmental issues. By this Notice of Intent, the Commission requests public comments on the scope of the issues it will address in the EA. All comments received are considered during the preparation of the EA. State and local government representatives are encouraged to notify their constituents of this proposed action and encourage them to comment on their areas of concern.

The EA will discuss impacts that could occur as a result of the construction and operation of the proposed project under these general headings:

- geology and soils
- water resources, fisheries, and wetlands
- vegetation and wildlife
- endangered and threatened species
- public safety
- land use
- cultural resources
- air quality and noise
- hazardous waste

We will also evaluate possible alternatives to the proposed project or portions of the project, and make recommendations on how to lessen or avoid impacts on the various resource areas. Alternatives routes that may be evaluated include moving segments of the project to the east side of the Norfolk & Western Railroad tracks.

Our independent analysis of the issues will be in the EA. Depending on the comments received during the scoping process, the EA may be published and mailed to Federal, state, and local agencies, public interest groups, interested individuals, affected landowners, newspapers, libraries, and the Commission's official service list for this proceeding. A comment period will be allotted for review if the EA is published. We will consider all comments on the EA before we make our recommendations to the Commission.

- To ensure your comments are considered, please carefully follow the instructions in the public participation section beginning on page 5.

[1] Texas Eastern's application was filed with the Commission under Section 7 of the Natural Gas Act and Part 157 of the Commission's regulations.

[2] The appendices referenced in this notice are not being printed in the **Federal Register**. Copies are available on the Commission's website at the ''RIMS'' link or from the Commission's Public Reference and Files Maintenance Branch, 888 First Street, N.E., Washington, D.C. 20426, or call (202) 208–1371. For instructions on connecting to RIMS refer to the last page of this notice. Copies of the appendices were sent to all those receiving this notice in the mail.

[3] ''We'', ''us'', and ''our'' refer to the environmental staff of the Office of Energy Projects (OEP).

Currently Identified Environmental Issues

We have already identified several issues that we think deserve attention based on a preliminary review of the proposed facilities and the environmental information provided by Texas Eastern. This preliminary list of issues may be changed based on your comments and our analysis.

- Six perennial and 8 intermittent waterbodies would be crossed by open cut.
- About 4.53 acres of wetlands, including about 2.47 acres of forested wetlands, would be crossed.
- About 7.23 acres of upland forest would be cleared.
- Three federally listed endangered or threatened species may occur in the proposed project area.
- About 117.7 acres of prime agricultural land would be affected, including a total of about 0.86 acre of prime farmland soils that would convert to industrial use.
- About 3.9 acres of residential property would be affected.
- A total of 16 residences are within 50 feet of the construction work area and 8 of these are within 10 feet.
- A total of 2 businesses are within 40 feet of the construction right-of-way and 1 business is within 10 feet.

Also, we have made a preliminary decision to not address the impacts of the nonjurisdictional facilities. We will briefly describe their location and status in the EA.

Public Participation

You can make a difference by providing us with your specific comments or concerns about the project. By becoming a commentor, your concerns will be addressed in the EA and considered by the Commission. You should focus on the potential environmental effects of the proposal, alternatives to the proposal (including alternative locations/routes), and measures to avoid or lessen environmental impact. The more specific your comments, the more useful they will be. Please carefully follow these instructions to ensure that your comments are received in time and properly recorded:

- Send an original and two copies of your letter to: Linwood A. Watson, Jr., Acting Secretary, Federal Energy Regulatory Commission, 888 First St., N.E., Room 1A, Washington, DC 20426
- Label one copy of the comments for the attention of Gas 2.
- Reference Docket No. CP02–045–000.
- Mail your comments so that they will be received in Washington, DC on or before (February 25, 2002).

Comments may also be filed electronically via the Internet in lieu of paper. See 18 CFR 385.2001(a)(1)(iii) and the instructions on the Commission's web site at *http://www.ferc.gov* under the ''e-Filing'' link and the link to the User's Guide. Before you can file comments you will need to create an account which can be created by clicking on ''Login to File'' and then ''New User Account.''

We may mail the EA for comment. If you are interested in receiving it, please return the Information Request (appendix 3). If you do not return the Information Request, you will be taken off the mailing list.

Becoming an Intervenor

In addition to involvement in the EA scoping process, you may want to become an official party to the proceeding known as an ''intervenor''. Intervenors play a more formal role in the process. Among other things, intervenors have the right to receive copies of case-related Commission documents and filings by other intervenors. Likewise, each intervenor must provide 14 copies of its filings to the Secretary of the Commission and must send a copy of its filings to all other parties on the Commission's service list for this proceeding. If you want to become an intervenor you must file a motion to intervene according to Rule 214 of the Commission's Rules of Practice and Procedure (18 CFR 385.214) (see appendix 2).[4] Only intervenors have the right to seek rehearing of the Commission's decision.

Affected landowners and parties with environmental concerns may be granted intervenor status upon showing good cause by stating that they have a clear and direct interest in this proceeding which would not be adequately represented by any other parties. You do not need intervenor status to have your environmental comments considered.

Additional information about the proposed project is available from the Commission's Office of External Affairs at (202) 208–1088 or on the FERC website (www.ferc.gov) using the ''RIMS'' link to information in this docket number. Click on the ''RIMS'' link, select ''Docket#'' from the RIMS Menu, and follow the instructions. For assistance with access to RIMS, the RIMS helpline can be reached at (202) 208–2222.

[4] Interventions may also be filed electronically via the Internet in lieu of paper. See the previous discussion on filing comments electronically.

Similarly, the ''CIPS'' link on the FERC Internet website provides access to the texts of formal documents issued by the Commission, such as orders, notices, and rulemakings. From the FERC Internet website, click on the ''CIPS'' link, select ''Docket #'' from the CIPS menu, and follow the instructions. For assistance with access to CIPS, the CIPS helpline can be reached at (202) 208–2474.

C.B. Spencer,

Acting Secretary.

[FR Doc. 02–2288 Filed 1–30–02; 8:45 am]

BILLING CODE 6717–01–P

DEPARTMENT OF ENERGY

Federal Energy Regulatory Commission

Notice of Intent To File Application for a New License

January 25, 2002.

Take notice that the following notice of intent has been filed with the Commission and is available for public inspection:

a. *Type of filing:* Notice of Intent to File an Application for New License.

b. *Project No:* 2100.

c. *Date filed:* January 11, 2002.

d. *Submitted By:* California Department of Water Resources.

e. *Name of Project:* Feather River.

f. *Location:* The Oroville Division, State Water Facilities are located on the Feather River, near the City of Oroville, in Butte County, California.

g. *Filed Pursuant to:* Section 15 of the Federal Power Act, 18 CFR 16.6.

h. Pursuant to Section 16.19 of the Commission's regulations, the licensee is required to make available the information described in section 16.7 of the regulations. Such information is available from the licensee at The California Department of Water Resources, 1416 Ninth Street, Room 742, Sacramento, California 94236–0001.

i. *FERC Contact:* James Fargo, 202–219–2848, *James.Fargo@Ferc.Gov.*

j. *Expiration Date of Current License:* January 31, 2007.

k. *Project Description:* The Oroville facilities consist of the existing Oroville Dam and Reservoir, the Edward Hyatt Powerplant, Thermalito Powerplant, Thermalito Diversion Dam Powerplant, Thermalito Forebay and Afterbay, and associated recreational and fish and wildlife facilities. The project has a total installed capacity of 762,000 kilowatts.

l. The licensee states its unequivocal intent to submit an application for a new license for Project No. 2100.

Pursuant to 18 CFR 16.9(b)(1) each application for a new license and any competing license applications must be filed with the Commission at least 24 months prior to the expiration of the existing license. All applications for license for this project must be filed by January 31, 2005.

A copy of the notice of intent is available for inspection and reproduction at the Commission's Public Reference Room, located at 888 First Street, NE, Room 2A, Washington, DC 20426, or by calling (202) 208–1371. The notice may be viewed on *http://www.ferc.fed.us/online/rims.htm* (call (202) 208–2222 for assistance). A copy is also available for inspection and reproduction at the address in item h above.

C.B. Spencer,

Acting Secretary.

[FR Doc. 02–2292 Filed 1–30–02; 8:45 am]

BILLING CODE 6717–01–P

DEPARTMENT OF ENERGY

Federal Energy Regulatory Commission

Notice of Non-Project Use of Project Lands and Soliciting Comments, Motions To Intervene, and Protests

January 25, 2002.

Take notice that the following hydroelectric application has been filed with the Commission and is available for public inspection:

a. *Application Type:* Non-Project Use of Project Lands.

b. *Project No.:* P–1494–224.

c. *Date Filed:* February 7, 2001.

d. *Applicant:* Grand River Dam Authority.

e. *Name of Project:* Pensacola Project.

f. *Location:* The project is located on the Grand (Neosho) River in Craig, Delaware, Mayes, and Ottawa Counties, Oklahoma. This project does not utilize Federal or Tribal lands.

g. *Filed Pursuant to:* Federal Power Act, 16 U.S.C. 791(a)–825(r).

h. *Applicant Contact:* Bob Sullivan, Grand River Dam Authority, P.O. Box 409, Vinita, OK 74301, (918) 256–5545.

i. *FERC Contact:* James Martin at *james.martin@ferc.gov,* or telephone (202) 208–1046.

j. *Deadline for filing comments, motions, or protests:* March 4, 2002.

All documents (original and eight copies) should be filed with: Magalie Roman Salas, Secretary, Federal Energy Regulatory Commission, 888 First Street, NE, Washington, DC 20426. Comments, protests and interventions may be filed electronically via the Internet in lieu of paper. *See,* 18 CFR 385.2001(a)(1)(iii) and the instructions on the Commission's Web site under the ''e-Filing'' link. Please include the project number (P–1494–224) on any comments or motions filed.

k. *Description of Project:* Grand River Dam Authority, licensee for the Pensacola Project, requests approval to grant permission to Southwinds Marina to install two new docks with 51 slips. The modifications would result in a total facility configuration of 6 docks with 144 slips. The proposed project is on Grand Lake in Section 35, Township 25 North, Range 22 East, Delaware County.

l. *Locations of the application:* A copy of the application is available for inspection and reproduction at the Commission's Public Reference Room, located at 888 First Street, NE, Room 2A, Washington, DC 20426, or by calling (202) 208–1371. The application may be viewed on the Web at *www.ferc.gov.* Call (202) 208–2222 for assistance. A copy is also available for inspection and reproduction at the address in item h above.

m. Individuals desiring to be included on the Commission's mailing list should so indicate by writing to the Secretary of the Commission.

n. *Comments, Protests, or Motions to Intervene*—Anyone may submit comments, a protest, or a motion to intervene in accordance with the requirements of Rules of Practice and Procedure, 18 CFR 385.210, .211, .214. In determining the appropriate action to take, the Commission will consider all protests or other comments filed, but only those who file a motion to intervene in accordance with the Commission's Rules may become a party to the proceeding. Any comments, protests, or motions to intervene must be received on or before the specified comment date for the particular application.

o. *Agency Comments*—Federal, state, and local agencies are invited to file comments on the described application. A copy of the application may be obtained by agencies directly from the Applicant. If an agency does not file comments within the time specified for filing comments, it will be presumed to have no comments. One copy of an agency's comments must also be sent to the Applicant's representatives.

C.B. Spencer,

Acting Secretary.

[FR Doc. 02–2293 Filed 1–30–02; 8:45 am]

BILLING CODE 6717–01–P

DEPARTMENT OF ENERGY

Federal Energy Regulatory Commission

[Docket Nos. RM01–12–000 et al.]

Electricity Market Design and Structure; Notice of Technical Conference

January 24, 2002.

In the matter of RT01–2–001, RT01–10–000, RT01–15–000, RT01–34–000, RT01–35–000, RT01–67–000, RT01–74–000, RT01–75–000, RT01–77–000, RT01–85–000, RT01–86–000, RT01–87–000, RT01–88–000, RT01–94–000, RT01–95–000, RT01–98–000, RT01–99–000, RT01–100–000, RT02–1–000, EL02–9–000, PJM Interconnection, L.L.C., Allegheny Electric Cooperative, Inc., Atlantic City Electric Company, Baltimore Gas & Electric Company, Delmarva Power & Light Company, Jersey Central Power & Light Company, Metropolitan Edison Company, PECO Energy Company, Pennsylvania Electric Company, PPL Electric Utilities Corporation, Potomac Electric Power Company, Public Service Electric & Gas Company, UGI Utilities Inc., Allegheny Power, Avista Corporation, Montana Power Company, Nevada Power Company, Portland General Electric Company, Puget Sound Energy, Inc., Sierra Pacific Power Company, Southwest Power Pool, Inc., Avista Corporation, Bonneville Power Administration, Idaho Power Company, Montana Power Company, Nevada Power Company, PacifiCorp, Portland General Electric Company, Puget Sound Energy, Inc., Sierra Pacific Power Company, GridFlorida LLC, Florida Power & Light Company, Florida Power Corporation, Tampa Electric Company, Carolina Power & Light Company, Duke Energy Corporation, South Carolina Electric & Gas Company, GridSouth Transco, LLC, Entergy Services, Inc., Southern Company Services, Inc., California Independent System Operator, Corporation, Bangor Hydro-Electric Company, Central Maine Power Company, National Grid USA, Northeast Utilities Service Company, The United Illuminating Company, Vermont Electric Power Company, ISO New England Inc., Midwest Independent System Operator, Alliance Companies, NSTAR Services Company, New York Independent System Operator, Inc., Central Hudson Gas & Electric Corporation, Consolidated Edison Company of New York, Inc., Niagara Mohawk Power Corporation, New York State Electric & Gas Corporation, Orange & Rockland Utilities, Inc., Rochester Gas & Electric Corporation, PJM Interconnection, L.L.C., Regional Transmission Organizations, Regional Transmission Organizations, Arizona Public Service Company, El Paso Electric Company, Public Service Company of New Mexico, Tucson Electric Power Company, WestConnect RTO, LLC

Take notice that the Staff of the Commission is convening a technical conference on February 5–7, 2002, to discuss the technical issues relating to the Commission's consideration of a

standard market design for wholesale electric power markets. The conference will feature panel discussions on: (1) Energy Markets and Operating Reserves; (2) Generation Adequacy; (3) Market Power Mitigation; (4) Transmission Rights and Financial Rights; (5) Transmission Tariff Transition; and (6) Minimizing Implementation Costs. This conference is intended to continue the discussions, begun at the public conference on January 22 and 23, 2002. Additional details about the conference will be provided in a subsequent notice and posted on the Commission's Web site under RTO Activities.

Members of the Commission may attend the conference and participate in the discussions. All interested persons may attend.

The conference will be held from approximately 9:30 a.m. to 5:00 p.m. each day, in a room to be designated at the offices of the Federal Energy Regulatory Commission, 888 First Street, NE, Washington, DC. The Commission is inviting selected panelists on these topics to participate in these workshops; it is not at this time entertaining requests to make presentations. There will be an opportunity for non-panelists to submit comments in the above dockets. For additional information about the conference, please contact Connie Caldwell at (202) 208–2027.

C.B. Spencer,

Acting Secretary.

[FR Doc. 02–2294 Filed 1–29–02; 8:45 am]

BILLING CODE 6717–01–P

DEPARTMENT OF ENERGY

Federal Energy Regulatory Commission

[Docket No. PA02–1–000]

Operational Audit of the California Independent System Operator; Notice of Filing and Request for Comments

January 25, 2002.

Take notice that on January 25, 2002, Vantage Consulting, Inc. filed a report entitled Operational Audit of the California Independent System Operator (Audit Report). The filing is in response to a Commission request for a proposal, dated October 9, 2001, to perform an operational audit of the California Independent System Operator Corporation (ISO). The Audit Report makes recommendations to the Commission with respect to prospective improvements in California markets, including what improvements could help the ISO in effectively performing its increasing responsibilities. The Audit Report states that the list of recommendations contained in Section I.C. of the Audit Report is comprehensive and that it would be almost impossible to simultaneously implement all the recommendations over the same time frame. Copies of the Audit Report are available for public inspection at the Commission in the above-docketed proceeding. The Audit Report is also available on the Internet at *ww.ferc.gov/electric/bulkpower.htm.*

We invite written comments on the Audit Report's list of specific recommendations set forth in Section I.C. Commenters are to state which of the recommendations, if any, they believe should be adopted and to prioritize those specific recommendations. Commenters also are to discuss an appropriate time frame for implementation of those recommendations that they believe should be adopted.

Comments are to be filed on two dates. The ISO is to file its comments on or before February 15, 2002. All other comments are to be filed on or before March 1, 2002. The latter may respond to the ISO's comments, in addition to commenting on the Audit Report as specified in the preceding paragraph.

Comments must contain an executive summary and must be no longer than 20 pages. To the extent possible, comments should be jointly filed by entities sharing similar views. Comments may be filed on paper or electronically via the Internet. Those filing electronically do not need to make a paper filing. For paper filings, the original and 14 copies of such comments should be submitted to the Office of the Secretary, Federal Energy Regulatory Commission, 888 First Street, NE, Washington DC 20426 and should refer to Docket No. PA02–1–000.

Comments filed via the Internet must be prepared in WordPerfect, MS Word, Portable Document Format, or ASCII format. To file the document, access the Commission's Web site at *www.ferc.gov* and click on ''e-Filing,'' and then follow the instructions. First time users will have to establish a user name and password. The Commission will send an automatic acknowledgment to the sender's e-Mail address upon receipt of comments.

User assistance for electronic filing is available at 202–208–0258 or by e-Mail to *efiling@ferc.gov.* Comments should not be submitted to the e-Mail address. All comments will be placed in the Commission's public files and will be available for inspection in the Commission's Public Reference Room at 888 First Street, NE, Washington DC 20426, during regular business hours. Additionally, all comments may be viewed, printed, or downloaded remotely via the Internet through FERC's home page using the RIMS link. User assistance for RIMS is available at 202–208–2222, or by e-mail to *RimsMaster@ferc.gov.*

C.B. Spencer,

Acting Secretary.

[FR Doc. 02–2369 Filed 1–30–02; 8:45 am]

BILLING CODE 6717–01–P

ENVIRONMENTAL PROTECTION AGENCY

[OPP–34239B; FRL–6819–8]

Lindane; Availability of Revised Risk Assessments

AGENCY: Environmental Protection Agency (EPA).

ACTION: Notice.

SUMMARY: This notice announces the availability of the revised risk assessments, which include some new information not available at the time of the preliminary risk assessment, and related documents for the organochlorine pesticide, lindane. In addition, this notice starts a 60–day public participation period during which the public is encouraged to submit comments on the new information not available previously in the preliminary risk assessments, and risk management ideas or proposals for lindane.. This action is in response to a joint initiative between EPA and the U.S. Department of Agriculture (USDA) to increase transparency in the tolerance reassessment process for organophosphate and certain other, non-organophosphate pesticides.

DATES: Comments, identified by docket control number OPP– 34239B, must be received by EPA on or before April 1, 2002.

ADDRESSES: Comments may be submitted by mail, electronically, or in person. Please follow the detailed instructions for each method as provided in Unit III. of the **SUPPLEMENTARY INFORMATION**. To ensure proper receipt by EPA, it is imperative that you identify docket control number OPP–34239B in the subject line on the first page of your response.

FOR FURTHER INFORMATION CONTACT: Mark T. Howard, Special Review and Reregistration Division (7508C), Office of Pesticide Programs, Environmental Protection Agency, 1200 Pennsylvania Ave., NW., Washington, DC 20460; telephone number: (703) 308–8172; e-mail address: howard.markt@epa.gov.

SUPPLEMENTARY INFORMATION:

I. Does this Action Apply to Me?

This action is directed to the public in general, nevertheless, a wide range of stakeholders will be interested in obtaining the revised risk assessments and submitting risk management comments on lindane including environmental, human health, and agricultural advocates; the chemical industry; pesticide users; and members of the public interested in the use of pesticides on food. As such, the Agency has not attempted to specifically describe all the entities potentially affected by this action. If you have any questions regarding the applicability of this action to a particular entity, consult the person listed under **FOR FURTHER INFORMATION CONTACT**.

II. How Can I Get Additional Information, Including Copies of this Document or Other Related Documents?

1. *Electronically*. You may obtain electronic copies of this document and other related documents from the EPA Internet Home Page at http://www.epa.gov/. To access this document, on the Home Page select ''Laws and Regulations,'' ''Regulations and Proposed Rules,'' and then look up the entry for this document under the ''**Federal Register**—Environmental Documents.'' You can also go directly to the **Federal Register** listings at http://www.epa.gov/fedrgstr/.

To access information about this pesticide and obtain electronic copies of the revised risk assessments and related documents mentioned in this notice, you can also go directly to the Home Page for the Office of Pesticide Programs (OPP) at http://www.epa.gov/pesticides/reregistration/lindane.

2. *In person*. The Agency has established an official record for this action under docket control number OPP–34239B. The official record consists of the documents specifically referenced in this action, any public comments received during an applicable comment period, and other information related to this action, including any information claimed as CBI. This official record includes the documents that are physically located in the docket, as well as the documents that are referenced in those documents. The public version of the official record does not include any information claimed as CBI. The public version of the official record, which includes printed, paper versions of any electronic comments submitted during an applicable comment period, is available for inspection in Rm. 119, Crystal Mall #2, 1921 Jefferson Davis Hwy., Arlington, VA, from 8:30 a.m. to 4 p.m., Monday through Friday, excluding legal holidays. The PIRIB telephone number is (703) 305–5805.

III. How Can I Respond to this Action?

A. How and to Whom Do I Submit Comments?

You may submit comments through the mail, in person, or electronically.To ensure proper receipt by EPA, it is imperative that you identify docket control number OPP–34239B in the subject line on the first page of your response.

1. *By mail*. Submit comments to: Public Information and Records Integrity Branch, Information Resources and Services Division (7502C), Office of Pesticide Programs, Environmental Protection Agency, 1200 Pennsylvania Ave., NW., Washington, DC 20460.

2. *In person or by courier*. Deliver comments to: Public Information and Records Integrity Branch, Information Resources and Services Division, Office of Pesticide Programs, Environmental Protection Agency, Rm. 119, Crystal Mall #2, 1921 Jefferson Davis Hwy., Arlington, VA. The PIRIB is open from 8:30 a.m. to 4 p.m., Monday through Friday, excluding legal holidays. The PIRIB telephone number is (703) 305–5805.

3. *Electronically*. Submit electronic comments by e-mail to: opp-docket@epa.gov, or you can submit a computer disk as described in this unit. Do not submit any information electronically that you consider to be CBI. Electronic comments must be submitted as an ASCII file, avoiding the use of special characters and any form of encryption. Comments and data will also be accepted on standard computer disks in WordPerfect 6.1/8.0 or ASCII file format. All comments in electronic form must be identified by the docket control number OPP–34239B. Electronic comments may also be filed online at many Federal Depository Libraries.

B. How Should I Handle CBI Information that I Want to Submit to the Agency?

Do not submit any information electronically that you consider to be CBI. You may claim information that you submit to EPA in response to this document as CBI by marking any part or all of that information as CBI. Information so marked will not be disclosed except in accordance with procedures set forth in 40 CFR part 2. In addition to one complete version of the comment that includes any information claimed as CBI, a copy of the comment that does not contain the information claimed as CBI must be submitted for inclusion in the public version of the official record. Information not marked confidential will be included in the public version of the official record without prior notice. If you have any questions about CBI or the procedures for claiming CBI, please consult the person listed under **FOR FURTHER INFORMATION CONTACT**.

IV. What Action is EPA Taking in this Notice?

EPA is making available for public viewing the revised risk assessments, which include some new information not available at the time of the preliminary risk assessments, and related documents for the organochlorine pesticide, lindane. These documents have been developed as part of the pilot public participation process that EPA and USDA are now using for involving the public in the reassessment of pesticide tolerances under the Food Quality Protection Act (FQPA), and the reregistration of individual pesticides under the Federal Insecticide, Fungicide, and Rodenticide Act (FIFRA). The pilot public participation process was developed as part of the EPA–USDA Tolerance Reassessment Advisory Committee (TRAC), which was established in April 1998, as a subcommittee under the auspices of EPA's National Advisory Council for Environmental Policy and Technology. A goal of the pilot public participation process is to find a more effective way for the public to participate at critical junctures in the Agency's development of organophosphate and certain other non-organophosphate pesticide risk assessments and risk management decisions. EPA and USDA began implementing this pilot process in August 1998, to increase transparency and opportunities for stakeholder consultation. The documents being released to the public through this notice provide some new information on the human health effects of lindane, and information on the revisions that were made to the lindane preliminary risk assessments, which where released to the public August 29, 2001 (66 FR 45677) (FRL–6783–8), through a notice in the **Federal Register**.

In addition, this notice starts a 60–day public participation period during which the public is encouraged to submit comments on the new information not available previously during the earlier public comment period for the lindane preliminary risk assessment, and risk management proposals or other comments on risk management for lindane. The Agency is providing an opportunity, through this

notice, for interested parties to provide written comments on the new lindane health effects information as well as risk management proposals or ideas on lindane. Such comments and proposals could address ideas about how to manage dietary, occupational, or ecological risks on specific lindane use sites or crops across the United States or in a particular geographic region of the country. To address dietary risk, for example, commenters may choose to discuss the feasibility of lower application rates, increasing the time interval between application and harvest (''pre–harvest intervals''), modifications in use, or suggest alternative measures to reduce residues contributing to dietary exposure. For occupational risks, commenters may suggest personal protective equipment or technologies to reduce exposure to workers and pesticide handlers. For ecological risks, commenters may suggest ways to reduce environmental exposure, e.g., exposure to birds, fish, mammals, and other non-target organisms. All comments and proposals must be received by EPA on or before April 1, 2002 at the addresses given under Unit III.A. Comments and proposals will become part of the Agency record for the pesticide specified in this notice.

List of Subjects

Environmental protection, Chemicals, Pesticides and pests.

Dated: January 17, 2002.

Lois A. Rossi,

Director, Special Review and Reregistration Division, Office of Pesticide Programs.

[FR Doc. 02–2382 Filed 1–30–02; 8:45 am]

BILLING CODE 6560–50–S

FEDERAL COMMUNICATIONS COMMISSION

[WT Docket No. 01–287; DA 01–2365]

Great Western Aviation, Inc. and Utah Jet Center, LLC

AGENCY: Federal Communications Commission.

ACTION: Notice.

SUMMARY: In this document, the FCC consolidates the proceeding of Great Western Aviation and Utah Jet Center LLC., application for renewal of aeronautical advisory (unicom).station KQA7 in Logan, Utah. This consolidation allows both parties to have a comparative hearing. This gives the commission an opportunity to determine which applicant would provide the public with better unicom service.

ADDRESSES: Please file notifications of availability with the Secretary, of the Federal Communications Commission, Room 1–C804, 445 Twelfth Street, SW., Washington, DC 20554.

FOR FURTHER INFORMATION CONTACT: Roberto Mussendenn., Wireless Telecommunications Bureau, at (202) 418–1428.

SUPPLEMENTARY INFORMATION: This is a summary of the Federal Communications Commission's Hearing Designator Order, DA 01–2365, adopted on October 11, 2001 and released on October 12, 2001. The full text is available for inspection and copying during normal business hours in the FCC Reference Center, Room CY–A257, 445 12th Street, SW., Washington, DC 20554. The complete text may be purchased from the Commission's copy contractor, Qualex International, 445 12th Street, SW., Room CY–B402, Washington, DC 20554. The full text may also be downloaded at: www.fcc.gov. Alternative formats are available to persons with disabilities by contacting Martha Contee at (202) 418–0260 or TTY (202) 418–2555.

On November 24, 2000, Great Western Aviation, Inc. (Great Western) filed an application for renewal of aeronautical advisory (unicom) station KQA7 in Logan, Utah. Unicom stations provide information concerning flying conditions, weather, availability of ground services, and other information to promote the safe and expeditious operation of aircraft. On December 7, 2000, Utah Jet Center, LLC (Utah Jet Center) filed an application for a new unicom station at the same location. Both applicants propose to provide service at Logan-Cache Airport, where there is no control tower or FAA flight service station. Under § 87.215(b) of the Commission's rules, only one unicom station may be licensed at such airports. Accordingly, these applications are mutually exclusive and must therefore be designated for comparative hearing.

A. Ordering Clauses

1. Accordingly, *it is ordered* that, pursuant to section 309(e) of the Communications Act of 1934, as amended, 47 U.S.C. 309(e), and § 1.221(a) of the Commission's Rules, 47 CFR 1.221(a), the parties' applications are designated for hearing in a consolidated proceeding to resolve the issues.

2. *It is further ordered* that the burden of proceeding with the introduction of evidence with respect to all the issues listed here shall be upon Great Western and Utah Jet Center with respect to their applications.

3. *It is further ordered* that, to avail themselves of the opportunity to be heard, the applicants, Great Western and Utah Jet, must each file with the Commission, within 20 days of the mailing of this Hearing Designation Order, a written notice of appearance in triplicate, accompanied by a processing fee of $9,020.00, stating their intentions to appear on the date fixed for the hearing and to present evidence on the issues specified in this Order, in accordance 47 CFR. 1.221(c), (f) and (g).

4. The Commission's Reference Information Center SHALL SEND a copy of this Order, via Certified Mail—Return Receipt Requested, to Great Western Aviation, 900 West 2500 North, Logan, Utah 84321, and to Utah Jet Center, LLC, P.O. Box 705, Logan, Utah 84321.

5. The Secretary of the Commission shall cause to have this *Hearing Designation Order* or a summary thereof published in the **Federal Register**.

6. The time and place of the comparative hearing will be specified in a subsequent Order, issued by the Enforcement Bureau.

Federal Communications Commission.

William F. Caton,

Deputy Secretary.

[FR Doc. 02–2283 Filed 1–30–02; 8:45 am]

BILLING CODE 6712–01–P

FEDERAL COMMUNICATIONS COMMISSION

[DA 01–2435]

Implementation of the International Telecommunication Union Charges for Satellite Network Filings

AGENCY: Federal Communications Commission.

ACTION: Notice.

SUMMARY: In this document, the Commission establishes the information that U.S. satellite operators must file with the Commission for compliance with the International Telecommunication Union (ITU) satellite cost recovery program, as modified by the recent meeting of the ITU Council. Specifically, the Commission requires licensees and applicants for certain satellite network applications and filings to provide specific information regarding the contact persons for such charges. Contact information must accompany all relevant future filings. This Notice will help U.S. satellite operators meet the requirements of the ITU as the ITU implements its recently adopted cost recovery-based charging process.

DATES: Satellite operators with pending filings subject to ITU fees must submit the required information March 4, 2002.

ADDRESSES: Send contact information to Oleg Efrimov, Satellite Engineering Branch, International Bureau, c/o Office of the Secretary, Federal Communications Commission, Washington, DC 20554.

FOR FURTHER INFORMATION CONTACT: Jacqueline Spindler, 202 418 1479, *jspindle@fcc.gov*.

SUPPLEMENTARY INFORMATION: This is a summary of the Public Notice—International Bureau Information, DA 01–2435, adopted October 19, 2001, and released October 19, 2001. The complete text of this Notice is available for inspection and copying during normal business hours in the FCC Reference Information Center, Courtyard Level, 445 12th Street, SW., Washington, DC 20554 and also may be purchased from the Commission's copy contractor, Qualex International, Portals II, 445 12th Street, SW., Room CY–B402, Washington, DC 20554.

1. The Commission establishes the information that U.S. satellite operators must file with the Commission for compliance with the International Telecommunication Union (ITU) satellite cost recovery program, as modified by the recent meeting of the ITU Council.

2. The information to be provided is as follows: (1) Name of contact, (2) name of company and office, (3) address, (4) e-mail address, (5) telephone number, and (6) fax number.

3. The point of contact may be a party other than the applicant or licensee, acting pursuant to an agreement between the applicant or licensee and the third party in which the third party assumes responsibility for payment of these fees.

4. Satellite filings subject to ITU cost recovery charges include certain advance publication submissions, requests for coordination or agreement (Articles S9 and S11 of the Radio Regulations), and requests for modification of the space service plans contained in Appendices S30, S30A, and S30B of the Radio Regulations that were received by the ITU after November 7, 1998. Advance publication filings not subject to coordination procedures (generally non-geosynchronous orbit (NGSO) systems) that were received by the ITU after November 7, 1998 are also subject to cost recovery.

Federal Communications Commission.

John V. Giusti,

Chief, International Spectrum and Communications Policy Branch, International Bureau.

[FR Doc. 02–2362 Filed 1–30–02; 8:45 am]

BILLING CODE 6712–01–P

FEDERAL MARITIME COMMISSION

Notice of Agreement(s) Filed

The Commission hereby gives notice of the filing of the following agreement(s) under the Shipping Act of 1984. Interested parties can review or obtain copies of agreements at the Washington, DC offices of the Commission, 800 North Capitol Street, NW., Room 940. Interested parties may submit comments on an agreement to the Secretary, Federal Maritime Commission, Washington, DC 20573, within 10 days of the date this notice appears in the **Federal Register**.

Agreement No.: 011788.
Title: Green/Seatrade Cooperative Working Agreement.
Parties:
Green Chartering AS
Seatrade Group N.V.
Synopsis: The proposed agreement establishes a vessel-sharing agreement for the transportation of refrigerated cargoes from United States East and Gulf ports to ports in Northern Europe.

Agreement No.: 201072–003.
Title: New Orleans-Americana Ships Group Crane Lease Agreement.
Parties:
Board of Commissioners of the Port of New Orleans
Americana Ships and Affiliates.
Synopsis: The amendment revises crane usage payments and extends the agreement through December 31, 2002.

Agreement No.: 201073–003.
Title: New Orleans/Cosco-K Line-Yang Ming Crane Rental Agreement.
Parties:
Board of Commissioners of the Port of New Orleans,
Cosco North America, Inc.,
''K'' Line America, Inc.,
Yang Ming Line.
Synopsis: The amendment revises crane usage payments and extends the agreement through December 31, 2002.

Dated: January 25, 2002.

By Order of the Federal Maritime Commission.

Bryant L. VanBrakle,

Secretary.

[FR Doc. 02–2274 Filed 1–30–02; 8:45 am]

BILLING CODE 6730–01–P

FEDERAL MARITIME COMMISSION

Sunshine Act Meeting

AGENCY HOLDING THE MEETING: Federal Maritime Commission.

FEDERAL REGISTER CITATION OF PREVIOUS ANNOUNCEMENT: 67 FR 3708.

PREVIOUSLY ANNOUNCED TIME AND DATE OF THE MEETING: 10 a.m.—January 30, 2002.

CHANGE IN THE MEETING: Addition of item in the CLOSED portion of the meeting.

Item 2—Application of the Delta Queen Steamboat Co. to Approve a Section 3, Pub. L. 89–777 Escrow Agreement and issue certificates for the vessels DELTA QUEEN and MISSISSIPPI QUEEN.

CONTACT PERSON FOR MORE INFORMATION: Bryant L. VanBrakle, Secretary, (202) 523–5725.

Bryant L. Van Brakle,

Secretary.

[FR Doc. 02–2504 Filed 1–29–02; 12:45 pm]

BILLING CODE 6730–01–M

FEDERAL MARITIME COMMISSION

Ocean Transportation Intermediary License; Revocations

The Federal Maritime Commission hereby gives notice that the following Ocean Transportation Intermediary licenses have been revoked pursuant to section 19 of the Shipping Act of 1984 (46 U.S.C. app. 1718) and the regulations of the Commission pertaining to the licensing of Ocean Transportation Intermediaries, effective on the corresponding date shown below:

License Number: 3754F.
Name: AFS Logistics, Inc.
Address: 8585 Business Park Drive, Shreveport, LA 71105.
Date Revoked: January 11, 2002.
Reason: Failed to maintain a valid bond.

License Number: 13339N.
Name: Box Consolidators (USA) L.L.C.
Address: 20 Corporation Row, Edison, NJ 08817.
Date Revoked: December 8, 2001.
Reason: Failed to maintain a valid bond.

License Number: 4256F.
Name: Brixton Management, Inc.
Address: 13560 Berlin Station Road, Berlin Center, OH 44401.
Date Revoked: January 10, 2002.
Reason: Failed to maintain a valid bond.

License Number: 1171NF.
Name: Caribbean Freight Forwarders, Inc.
Address: 4715 NW 72nd Avenue, Miami, FL 33166.
Date Revoked: January 2, 2002.
Reason: Failed to maintain a valid bond.

License Number: 16848N.
Name: eKKa Forwarding Inc.
Address: 223 Bergen Turnpike, Bldg. 3, Ridgefield Park, NJ 07660.
Date Revoked: December 15, 2001.
Reason: Failed to maintain a valid bond.

License Number: 4098F.
Name: Gaeli, Inc.
Address: 10050 NW 116th Way, Ste. 15, Medley, FL 33178.
Date Revoked: January 10, 2002.
Reason: Failed to maintain a valid bond.

License Number: 3656NF.
Name: Gulfstream Freight Services, Inc. dba Gulfstream Logistics.
Address: 11919 SW 130th Street, Miami, FL 33186.
Date Revoked: December 6, 2001.
Reason: Failed to maintain valid bonds.

License Number: 17090N.
Name: Inter-Connect Transportation, Inc.
Address: 8901 S. La Cienega Blvd., Ste. 210, Inglewood, CA 90301.
Date Revoked: December 8, 2001.
Reason: Failed to maintain a valid bond.

License Number: 3690NF.
Name: Inter-Freight Logistics, Inc.
Address: 5401 W. Kennedy Boulevard, Ste. 999, Tampa, FL 33609.
Date Revoked: December 28, 2001.
Reason: Surrendered license voluntarily.

License Number: 4335N.
Name: International Services, Inc.
Address: 2907 Empress Ct., Valrico, FL 33594.
Date Revoked: December 5, 2001.
Reason: Failed to maintain a valid bond.

License Number: 15712N.
Name: J.H.K. Transportation System, Inc.
Address: 5210 12th Street East, Ste. B, Fife, WA 98424.
Date Revoked: December 30, 2001.
Reason: Failed to maintain a valid bond.

License Number: 12473N.
Name: Jupiter Express, Inc.
Address: 156–19 76th Street, Howard Beach, NY 11414.
Date Revoked: December 8, 2001.
Reason: Failed to maintain a valid bond.

License Number: 4637F.
Name: Lion Cargo Brokers, Inc. dba Polaris Ocean Line.
Address: 8055 NW 77th Court, Ste. 3, Medley, FL 33166.
Date Revoked: January 2, 2002.
Reason: Failed to maintain a valid bond.

License Number: 4215F.
Name: Logistics Management International, Inc.
Address: 816 Thorndale Avenue, Bensenville, IL 60106.
Date Revoked November 7, 2001.
Reason: Failed to maintain a valid bond.

License Number: 4066N.
Name: Maracargo Inc.
Address: 7700 NW 79th Place, Ste. 1, Miami, FL 33166.
Date Revoked: November 4, 2001.
Reason: Failed to maintain a valid bond.

License Number: 3326N.
Name: Modern Cargo Services Inc.
Address: 11265 NW 131st Street, Medley, FL 33178.
Date Revoked: November 1, 2001.
Reason: Failed to maintain a valid bond.

License Number: 16462N.
Name: Multi Transport Inc.
Address: 8422 NW 66th Street, Miami, FL 33166.
Date Revoked: December 29, 2001.
Reason: Failed to maintain a valid bond.

License Number: 4592N.
Name: Natasha International Freight, Inc.
Address: 12912 SW 133 Court, Ste. A, Miami, FL 33186.
Date Revoked: December 8, 2001.
Reason: Failed to maintain a valid bond.

License Number: 12459N.
Name: PSD International, Inc.
Address: 220 W. Ivy Avenue, Inglewood, CA 90302.
Date Revoked: December 15, 2001.
Reason: Failed to maintain a valid bond.

License Number: 16083F.
Name: Palmetto Freight Forwarding Group.
Address: 9695 NW 79th Avenue, Bay 16, Hialeah, FL 33016.
Date Revoked: December 6, 2001.
Reason: Failed to maintain a valid bond.

License Number: 0690F.
Name: Robert E. Landweer & Co., Inc.
Address: 911 Western Avenue, Ste. 208, Seattle, WA 98104.
Date Revoked: December 16 2001.
Reason: Failed to maintain a valid bond.

License Number: 15682N.
Name: S/J Americas Service, LLC dba S/J Americas Service.
Address: 11821 I–H 10 East, Ste. 630, Houston, TX 77029.
Date Revoked: December 5, 2001.
Reason: Failed to maintain a valid bond.

License Number: 3406N.
Name: Simmons International Express, Inc.
Address: 101 E. Clarendon Street, Prospect Heights, IL 60070.
Date Revoked: January 4, 2002.
Reason: Failed to maintain a valid bond.

License Number: 4587NF.
Name: Toriello Passarelli, Inc. dba Toriello Freight International.
Address: 8611 NW 72nd Street, Miami, FL 33166.
Date Revoked: August 10, 2001.
Reason: Failed to maintain valid bonds.

License Number: 4511F.
Name: Total Logistic Control, LLC.
Address: 8300 Logistics Drive, Zeeland, MI 49464.
Date Revoked: January 6, 2002.
Reason: Failed to maintain a valid bond.

License Number: 4551F.
Name: Washington World Trading Corp. dba Washington World International Freight Forwarders.
Address: 10411 NW 28th Street, Ste. C–103, Miami, FL 33172.
Date Revoked: December 26, 2001.
Reason: Failed to maintain a valid bond.

Sandra L. Kusumoto,
Director, Bureau of Consumer Complaints and Licensing.

[FR Doc. 02–2273 Filed 1–30–02; 8:45 am]
BILLING CODE 6730–01–P

FEDERAL MARITIME COMMISSION

Ocean Transportation Intermediary License Reissuance

Notice is hereby given that the following Ocean Transportation Intermediary license has been reissued by the Federal Maritime Commission pursuant to section 19 of the Shipping Act of 1984, as amended by the Ocean Shipping Reform Act of 1998 (46 U.S.C. app. 1718) and the regulations of the Commission pertaining to the licensing of Ocean Transportation Intermediaries, 46 CFR 515.

License No.	Name/Address	Date reissuance
16838N	Webtrans Logistics, Inc. dba ANC International, 21136 S. Wilmington Avenue, #110, Carson, CA 90810.	December 19, 2001.

Sandra L. Kusumoto,

Director, Bureau of Consumer Complaints and Licensing.

[FR Doc. 02–2271 Filed 1–30–02; 8:45 am]

BILLING CODE 6730–01–P

FEDERAL MARITIME COMMISSION

Ocean Transportation Intermediary License; Applicant

Notice is hereby given that the following applicant has filed with the Federal Maritime Commission an application for license as Non-Vessel Operating Common Carrier and Ocean Freight Forwarder—Ocean Transportation Intermediary pursuant to section 19 of the Shipping Act of 1984 as amended (46 U.S.C. app. 1718 and 46 CFR 515).

Persons knowing of any reason why the following applicant should not receive a license are requested to contact the Office of Transportation Intermediaries, Federal Maritime Commission, Washington, DC 20573.

Non-Vessel Operating Common Carrier Ocean Transportation Intermediary Applicant:

Security Storage Company of Washington, 1701 Florida Avenue, NW., Washingnton, DC 20009–1697, Officers: Larry DePace, Senior Vice President (Qualifying Individual), Charles R. Lawrence, President/CEO.

Dated: January 25, 2002.

Bryant L. VanBrakle,

Secretary.

[FR Doc. 02–2272 Filed 1–30–02; 8:45 am]

BILLING CODE 6730–01–P

DEPARTMENT OF HEALTH AND HUMAN SERVICES

Food and Drug Administration

[Docket No. 01D–0584]

Draft ''Guidance for Industry: Use of Nucleic Acid Tests on Pooled Samples From Source Plasma Donors to Adequately and Appropriately Reduce the Risk of Transmission of HIV–1 and HCV''; Availability

AGENCY: Food and Drug Administration, HHS.

ACTION: Notice.

SUMMARY: The Food and Drug Administration (FDA) is announcing the availability of a draft document entitled ''Guidance for Industry: Use of Nucleic Acid Tests on Pooled Samples From Source Plasma Donors to Adequately and Appropriately Reduce the Risk of Transmission of HIV–1 and HCV'' dated December 2001. The draft guidance document, when finalized, would inform all establishments that manufacture Source Plasma that FDA has approved nucleic acid tests (NAT) to identify human immunodeficiency virus type 1 (HIV–1) and hepatitis C virus (HCV) in Source Plasma donations. The draft document recommends that manufacturers submit a prior approval supplement to a biologics license application (BLA) to implement HIV–1 and HCV NAT by a specified date.

DATES: Submit written or electronic comments on the draft guidance to ensure their adequate consideration in preparation of the final document by May 1, 2002. General comments on agency guidance documents are welcome at any time.

ADDRESSES: Submit written requests for single copies of the draft guidance to the Office of Communication, Training, and Manufacturers Assistance (HFM–40), Center for Biologics Evaluation and Research (CBER), Food and Drug Administration, 1401 Rockville Pike, Rockville, MD 20852–1448. Send one self-addressed adhesive label to assist the office in processing your requests. The document may also be obtained by mail by calling the CBER Voice Information System at 1–800–835–4709 or 301–827–1800, or by fax by calling the FAX Information System at 1–888–CBER–FAX or 301–827–3844. See the **SUPPLEMENTARY INFORMATION** section for electronic access to the draft guidance document.

Submit written comments on the document to the Dockets Management Branch (HFA–305), Food and Drug Administration, 5630 Fishers Lane, rm. 1061, Rockville, MD 20852. Submit electronic comments to http://www.fda.gov/dockets/ecomments.

FOR FURTHER INFORMATION CONTACT: Nathaniel L. Geary, Center for Biologics Evaluation and Research (HFM–17), Food and Drug Administration, 1401 Rockville Pike, Rockville, MD 20852–1448, 301–827–6210.

SUPPLEMENTARY INFORMATION:

I. Background

FDA is announcing the availability of a draft document entitled ''Guidance for Industry: Use of Nucleic Acid Tests on Pooled Samples From Source Plasma Donors to Adequately and Appropriately Reduce the Risk of Transmission of HIV–1 and HCV'' dated December 2001. FDA's final rule (66 FR 31146, June 11, 2001) entitled ''Requirements for Testing Human Blood Donors for Evidence of Infection Due to Communicable Diseases'' became effective on December 10, 2001. The provision in 21 CFR 610.40(b) of the rule provides that manufacturers ''must perform one or more screening tests to adequately and appropriately reduce the risk of transmission of communicable disease agents'' (66 FR 31146 at 31162). As we noted in the preamble to the final rule, the standard for adequate and appropriate testing will change as new testing technology is approved by FDA. We explained, ''we intend to regularly issue guidance describing those tests that we believe would adequately and appropriately reduce the risk of transmission of communicable disease agents'' (66 FR 31146 at 31149).

The availability of NAT to identify HIV–1 and HCV will change the testing protocol that should be used to adequately and appropriately reduce the risk of transmission of those diseases. The draft document recommends that manufacturers submit a prior approval supplement to a BLA to implement HIV–1 and HCV NAT by a specified date.

This draft guidance is being issued consistent with FDA's good guidance practices regulation (21 CFR 10.115). This draft guidance document represents the agency's current thinking on this topic. It does not create or confer any rights for or on any person and does not operate to bind FDA or the public. An alternative approach may be used if such approach satisfies the requirement of the applicable statutes and regulations.

II. Comments

This draft document is being distributed for comment purposes only and is not intended for implementation at this time. Interested persons may submit to the Dockets Management Branch (address above) written or electronic comments regarding this draft guidance document. Submit written or electronic comments to ensure adequate consideration in preparation of the final document by May 1, 2002. Two copies of any comments are to be submitted, except individuals may submit one copy. Comments should be identified with the docket number found in the brackets in the heading of this document. A copy of the document and received comments are available for public examination in the Dockets Management Branch between 9 a.m. and 4 p.m., Monday through Friday.

III. Electronic Access

Persons with access to the Internet may obtain the document at either http://www.fda.gov/cber/guidelines.htm or http://www.fda.gov/ohrms/dockets/default.htm.

Dated: January 23, 2002.

Margaret M. Dotzel,

Associate Commissioner for Policy.

[FR Doc. 02–2321 Filed 1–30–02; 8:45 am]

BILLING CODE 4160–01–S

DEPARTMENT OF HEALTH AND HUMAN SERVICES

Health Resources and Services Administration

Agency Information Collection Activities: Proposed Collection: Comment Request

In compliance with the requirement for opportunity for public comment on proposed data collection projects (section 3506(c)(2)(A) of Title 44, United States Code, as amended by the Paperwork Reduction Act of 1995, Pub. L. 104–13), the Health Resources and Services Administration (HRSA) publishes periodic summaries of proposed projects being developed for submission to the Office of Management and Budget under the Paperwork Reduction Act of 1995. To request more information on the proposed project or to obtain a copy of the data collection plans and draft instruments, call the HRSA Reports Clearance Officer on (301) 443–1129.

Comments are invited on: (a) Whether the proposed collection of information is necessary for the proper performance of the functions of the Agency, including whether the information shall have practical utility; (b) the accuracy of the Agency's estimate of the burden of the proposed collection of information; (c) ways to enhance the quality, utility, and clarity of the information to be collected; and (d) ways to minimize the burden of the collection of information on respondents, including the use of automated collection techniques or other forms of information technology.

Proposed Project: The National Health Service Corps (NHSC), Professional Training and Information Questionnaire (PTIQ), (OMB No. 0915–0208)—Revision

The National Health Service Corps (NHSC) of the HRSA's Bureau of Health Professions (BHPr), is committed to improving the health of the Nation's underserved by uniting communities in need with caring health professionals and by supporting communities' efforts to build better systems of care.

The National Health Service Corps (authorized by the Public Health Services Act, section 331) collects data on its programs to ensure compliance with legislative mandates and to report to Congress and policymakers on program accomplishments. To meet these objectives, the NHSC requires a core set of information collected annually that is appropriate for monitoring and evaluating performance and reporting on annual trends.

The PTIQ is used to collect data related to professional issues from NHSC obligated Scholarship Program Recipients including physicians, physician assistants (PAs), nurse practioners (NPs), certified nurse midwives (CNMs), and other disciplines in the current year's placement cycle. This data is used to match an individual health care professional with the most appropriate clinical practice setting.

The PTIQ will be mailed twelve months in advance of the intended service availability date. Estimates of annualized reporting burden are as follows:

Type of respondent	Number of respondents	Responses per respondent	Hours per response (minutes)	Total burden hours
Health Care Professionals	311	1	5	26

Send comments to Susan G. Queen, Ph.D., HRSA Reports Clearance Officer, Room 11–05, Parklawn Building, 5600 Fishers Lane, Rockville, MD 20857. Written comments should be received within 60 days of this notice.

Dated: January 25, 2002.

Jane M. Harrison,

Director, Division of Policy Review and Coordination.

[FR Doc. 02–2296 Filed 1–31–02; 8:45 am]

BILLING CODE 4165–15–P

DEPARTMENT OF HEALTH AND HUMAN SERVICES

Health Resources and Services Administration

Agency Information Collection Activities: Proposed Collection: Comment Request

In compliance with the requirement for opportunity for public comment on proposed data collection projects (section 3506(c)(2)(A) of Title 44, United States Code, as amended by the Paperwork Reduction Act of 1995, Pub. L. 104–13), the Health Resources and Services Administration (HRSA) publishes periodic summaries of proposed projects being developed for submission to the Office of Management and Budget under the Paperwork Reduction Act of 1995. To request more information on the proposed project or to obtain a copy of the data collection plans and draft instruments, call the HRSA Reports Clearance Officer on (301) 443–1129.

Comments are invited on: (a) Whether the proposed collection of information is necessary for the proper performance of the functions of the Agency, including whether the information shall have practical utility; (b) the accuracy of the Agency's estimate of the burden of the proposed collection of information; (c) ways to enhance the quality, utility, and clarity of the information to be collected; and (d) ways to minimize the burden of the collection of information on respondents, including the use of automated collection techniques or other forms of information technology.

Proposed Project: National Practitioner Data Bank for Adverse Information on Physicians and Other Health Care Practitioners: Regulations and Forms (OMB No. 0915–0126)—Revision

The National Practitioner Data Bank (NPDB) was established through Title IV of Public Law 99–660, the Health Care Quality Improvement Act of 1986, as amended. Final regulations governing the NPDB are codified at 45 CFR part 60. Responsibility for NPDB implementation and operation resides in the Bureau of Health Professions, Health Resources and Services Administration, U.S. Department of Health and Human Services (DHHS). The NPDB began operation on September 1, 1990.

The intent of Title IV of Public Law 99–660 is to improve the quality of health care by encouraging hospitals, State licensing boards, professional societies, and other entities providing health care services, to identify and discipline those who engage in unprofessional behavior; and to restrict the ability of incompetent physicians, dentists, and other health care practitioners to move from State to State

without disclosure of practitioner previous damaging or incompetent performance.

The NPDB acts primarily as a flagging system; its principal purpose is to facilitate comprehensive review of practitioners' professional credentials and background. Information on medical malpractice payments, adverse licensure actions adverse clinical privileging actions, adverse professional society actions, and Medicare/Medicaid exclusions is collected from, and disseminated to, eligible entities. It is intended that NPDB information should be considered with other relevant information in evaluating a practitioner's credentials.

This request is for a revision of reporting and querying forms previously approved on April 30, 1999. The reporting forms and the request for information forms (query forms) must be accessed, completed, and submitted to the NPDB electronically through the NPDB website at *www.npdb-hipdb.com.* All reporting and querying is performed through this secure website.

This request also includes changes to the NPDB forms as a result of the potential implementation of section 1921 of the Social Security Act (section 1921), which is now being considered. Section 1921 expands the scope of the NPDB by permitting additional entities such as agencies administering Federal health care programs, State Medicaid fraud control units, utilization and quality control peer review organizations, and certain law enforcement officials to query the NPDB for adverse licensure actions and other negative actions or findings on health care practitioners and entities licensed or otherwise authorized by a State (or a political subdivision) to provide health care services. Therefore, beginning with section 60.9, sections have been renumbered based on the possible implementation of section 1921. Additionally, due to overlap in requirements for the Healthcare Integrity and Protection Data Bank (HIPDB), some of the NPDB's burden has been subsumed under the HIPDB.

Estimates of burden are as follows:

Regulation citation	Number of respondents	Responses per respondent	Hours per response (minutes)	Total burden hours
Reports				
60.6(a) Errors & Omissions	450	4.22	15	475
60.6(b) Revisions to Actions	110	1.45	30	80
60.7(b) Medical Malpractice Payment Reports	660	28.03	45	13,875
60.8(b) Adverse Action Reports—Licensure Actions by Boards of Medical Examiners	[1] 0	0	0	0
60.9(b) Adverse Action Reports—Licensure Actions: Submission by State Licensing Boards Reporting by State Licensing Authorities	[2] 0	0	0	0
60.10 Adverse Action Reports—Negative Actions or Findings: Submission by Peer Review Organization/Accreditation Entity	58	8.62	45	375
Reporting by State Licensing Authorities	50	10	15	125
60.11(a) Adverse Action Reports—Clinical Privileges & Professional Society	1,000	1.2	45	900
60.11(c) Requests for Hearings by Entities	1	1	480	8
Access to Data (Queries and Self Queries)				
60.12(a)(1) Queries by Hospital-Practitioner Applications	6,000	40	5	20,000
60.12(a)(2) Queries by Hospitals—Two Yr. Cycle	6,000	160	5	80,000
60.13(a)(1)(i) Disclosures to Hospitals	[3] 0	0	0	0
60.13(a)(1)(ii) Disclosure to Practitioners (Self Queries)	[4] 0	0	0	0
60.13(a)(1)(iii) Queries by Practitioner Licensure Boards	125	120	5	1,250
60.13(a)(1)(iv) Queries by Non-Hospital Health Care Entities	4,000	550	5	183,333
60.13(a)(1)(v) Queries by Plaintiffs' Attorneys	5	1	30	3
60.13(a)(1)(vi) Queries by Non-Hospital Health Care Entities-Peer Review	[5] 0	0	0	0
60.13(a)(1)(vii) Requests by Researchers for Aggregate Data	100	1	30	50
60.13(a)(2)(i) through (vi) Queries by section 1921—only Eligible Entities	[6] 425	276.47	5	9,792
60.13(a)(2)(vii) Queries by Hospitals and other Health Care Entities	[7] 0	0	0	0
60.13(a)(2)(viii) Self Queries by Health Care Practitioners and Entities	[8] 0	0	0	0
60.13(a)(2)(ix) Requests by Researchers for Aggregate Data	[9] 0	0	0	0
Disputed Reports/Secretarial Reviews				
60.16(b) Practitioner Places a Report in Disputed Status	1,050	1	15	263
60.16(b) Practitioner Requests for Secretarial Review	115	1	480	920
60.16(b) Practitioner Statement	2,400	1	60	2,400
Access and Admin. Forms				
60.3 Entity Registration—Initial	2,000	1	60	2,000
60.3 Entity Registration-Update	1,225	1	5	102
60.13(a) Authorized Agent Designation—Initial	500	1	15	125
60.13(a) Authorized Agent Designation—Update	50	1	5	4
60.14(c) Account Discrepancy Report	300	1	15	75
60.14(c) Electronic Transfer of Funds Authorization	400	1	15	100
60.3 Entity Registration— Reactivation	100	1	60	100
Total				316,355

[1] Included in estimate for reporting of adverse licensure actions to the HIPDB in 45 CFR part 61.
[2] Included in estimate for reporting of adverse licensure actions to the HIPDB in 45 CFR part 61.
[3] Included in estimate for 60.12(a)(1).
[4] Included in estimate for self queries in the HIPDB in 45 CFR part 61.
[5] Included in estimate for non-hospital health care entity queries under § 60.13(a)(1).
[6] Estimate for queries of section 1921 information by boards that license health care practitioners is included in estimate for practitioner licensure boards under § 60.13(a)(1).

[7] Estimate for queries of section 1921 information by hospitals and other health care entities is included in estimates for queries by hospitals under 60.12(a)(1) and non-hospital health care entities under 60.13(a)(1)(iv).

[8] Estimate for self queries by health care practitioners and health care entities is included in estimate for self queries in the HIPDB in 45 CFR part 61.

[9] Included in estimate for 60.13(a)(1)(vii).

Send comments to Susan Queen, Ph.D., HRSA Reports Clearance Officer, Room 11–05, Parklawn Building, 5600 Fishers Lane, Rockville, Maryland 20852, (301) 443–1129. Written comments should be received within 60 days of this notice.

Dated: January 24, 2002.

James J. Corrigan,

Associate Administrator for Operations and Management.

[FR Doc. 02–2297 Filed 1–30–02; 8:45 am]

BILLING CODE 4165–15–P

DEPARTMENT OF HEALTH AND HUMAN SERVICES

National Institutes of Health

Proposed Collection; Comment Request; Special Volunteer and Guest Researcher Assignment

SUMMARY: In compliance with the requirement of section 3506(c)(2)(A) of the Paperwork Reduction Act of 1995, for opportunity for public comment on proposed data collection projects, the Office of the Director, National Institutes of Health (NIH) will publish periodic summaries of proposed projects to be submitted to the Office of Management and Budget (OMB) for review and approval.

Proposed Collection: *Title:* Special Volunteer and Guest Researcher Assignment. *Type of Information Collection Request:* Extension of OMB No. 0925–0177; 07/31/02. *Need and Use of Information Collection:* Form NIH–590 records, names, address, employer, education, and other information on prospective Special Volunteers and Guest Researchers, and is used by the responsible NIH approving official to determine the individual's qualifications and eligibility for such assignments. The form is the only official record of approved assignments. *Frequency of Response:* On occasion. *Affected Public:* Individuals or households. *Type of Respondents:* Special Volunteer and Guest Researcher candidates. *Estimated Number of Respondents:* 1560. *Estimated Number of Responses Per Respondent:* 1. *Average Burden Hours Per Response:* .08. *Estimated Total Annual Burden Hours Requested:* 125.

There are no Capital Costs, Operating Costs, and/or Maintenance Costs to report.

Type of respondents	Estimated number of respondents	Estimated number of responses per respondent	Average burden hours per response	Estimated total annual burden hours requested
Guest Researcher	370	1	.08	29.6
Special Volunteer	1190	1	.08	95.2
Total	1560	1	.08	124.8

Request for Comments: Written comments and/or suggestions from the public and affected agencies are invited on one or more of the following points: (1) Whether the proposed collection of information will have practical utility; (2) The accuracy of the agency's estimate of the proposed collection of information, including the validity of the methodology and assumptions used; (3) Ways to enhance the quality, utility, and the clarity of information to be collected; and (4) Ways to minimize the burden of the collection of information on those who are to respond, including the use of appropriate automated, electronic, mechanical, or other technological collection techniques or other forms of information technology.

FOR FURTHER INFORMATION CONTACT: To request more information on the proposed project or to obtain a copy of the data collection plans and instruments, contact: Edie Bishop, HR Consultant, Office of Human Resource Management, Senior and Scientific Employment Division, Building 31, Room B3C07, 31 Center Drive MSC 2203, Bethesda, MD 20892.

Comments Due Date: Comments regarding this information collection are best assured of having their full effect if received on or before April 1, 2002.

Dated: January 28, 2002.

Stephen C. Benowitz,

Director, Office of Human Resource Management.

[FR Doc. 02–2400 Filed 1–30–02; 8:45 am]

BILLING CODE 4140–01–M

DEPARTMENT OF HEALTH AND HUMAN SERVICES

National Institutes of Health

Submission for OMB Review: Comment Request; National Institutes of Health Construction Grants

SUMMARY: Under the provisions of section 3507(a)(1)(D) of the Paperwork Reduction Act of 1995, the Office of Extramural Research (OER), Office of Extramural Programs (OEP), the National Institutes of Health (NIH) has submitted to the Office of Management and Budget (OMB) a request for review and approval of a revision of the information collection listed below. This proposed revision was previously published in the **Federal Register** on August 7, 2001 (pages 41251–41252) and allowed 60 days for public comment. No public comments were received. The purpose of this notice is to allow an additional 30 days for public comment. The National Institutes of Health may not conduct or sponsor, and the respondent is not required to respond to, an information collection that has been extended, revised, or implemented on or after October 1, 1995, unless it displays a currently valid OMB control number.

Proposed Collection: Title: National Institutes of Health Construction Grants—42 CFR part 52b (Final Rule). *Type of Information Collection Request:* Revision of No. 0925–0424, expiration date 02/28/2002. *Need and Use of the Information Collection:* This request is

for OMB review and approval of a revision of the information collection and recordkeeping requirements contained in the regulation codified at 42 CFR part 52b. The purpose of the regulation is to govern the awarding and administration of grants awarded by NIH and its components for construction of new buildings and the alteration, renovation, remodeling, improvement, expansion, and repair of existing buildings, including the provision of equipment necessary to make the buildings (or applicable part of the buildings) suitable for the purpose for which it was constructed. The NIH is revising the estimated annual reporting and recordkeeping burden previously approved by OMB is to reflect the increase in the number of construction grants being awarded and administered by NIH. In terms of reporting requirements:

Section 52b.9(b) of the regulation requires the transferor of a facility which is sold or transferred, or owner of a facility, the use of which has changed, to provide written notice of the sale, transfer or change within 30 days. Section 52b.10(f) requires a grantee to submit an approved copy of the construction schedule prior to the start of construction. Section 52b.10(g) requires a grantee to provide daily construction logs and monthly status reports upon request at the job site. Section 52b.11(b) requires applicants for a project involving the acquisition of existing facilities to provide the estimated cost of the project, cost of the acquisition of existing facilities, and cost of remodeling, renovating, or altering facilities to serve the purposes for which they are acquired.

In terms of recordkeeping requirements: Section 52b.10(g) requires grantees to maintain daily construction logs and monthly status reports at the job site. *Frequency of Response:* On occasion. *Affected Public:* Not-for-profit institutions. *Type of respondents:* Grantees. The annual reporting burden is as follows:

ESTIMATED ANNUAL REPORTING AND RECORDKEEPING BURDEN

Applicable section of 42 CFR 52b	Estimated annual number of respondents	Estimated number of responses per respondent	Average burden hours per response	Estimated total annual burden hours
Reporting:				
52b.9(b)	1	1	0.5	0.5
52b.10(f)	(60)	1	1	60
52b.10(g)	(60)	12	1	720
52b.11(b)	100	1	1	100
Recordkeeping:				
52b.10(g)	(60)	260	1	15,600
Total	101			16,481

The annualized cost to the public, based on an average of 60 active grants in the construction phase, is estimated at: $576,835 (or $35 x16,481). There are no Capital Costs to report, and there are no operating or Maintenance Costs to report.

Request for Comments: Written comments and/or suggestions from the public and affected agencies should address one or more of the following points: (1) Evaluate whether the proposed collection of information and recordkeeping are necessary for the proper performance of the function of the agency, including whether the information will have practical utility; (2) Evaluate the accuracy of the agency's estimate of the burden of the proposed collection of information and recordkeeping, including the methodology and assumptions used; (3) Enhance the quality, utility, and clarity of the information to be collected and the recordkeeping information to be maintained; and (4) Minimize the burden of the collection of information on those who are to respond, including the use of appropriate automated, electronic, mechanical, or other technological collection and recordkeeping techniques of other forms of information technology.

Direct Comments to OMB: Written comments and/or suggestions regarding the item(s) contained in this notice, especially regarding the estimated public burden and associated response time, should be directed to the: Office of Management and Budget, Office of Regulatory Affairs, New Executive Office Building, room 10235, Washington, DC 20503, Attention: Desk Officer for NIH.

FOR FURTHER INFORMATION CONTACT: Jerry Moore, NIH Regulations Officer, Office of Management Assessment, Division of Management Support, National Institutes of Health, 6011 Executive Boulevard, Room 601, MSC 7669, Rockville, Maryland 20852; call 301–496–4607 (this is not a toll-free number) or e-mail your request to *jm40z@nih.gov*.

Comments Due Date: Comments regarding this information collection are best assured of having full effect if received on or before March 4, 2002.

Dated: January 28, 2002.

Jerry Moore,

Regulations Officer, National Institutes of Health.

[FR Doc. 02–2401 Filed 1–30–02; 8:45 am]

BILLING CODE 4140–01–P

DEPARTMENT OF HEALTH AND HUMAN SERVICES

National Institutes of Health

Fogarty International Center; Notice of Meeting

Pursuant to section 10(d) of the Federal Advisory Committee Act, as amended (5 U.S.C. Appendix 2), notice is hereby given of a meeting of the Fogarty International Center Advisory Board.

The meeting will be open to the public as indicated below, with attendance limited to space available. Individuals who plan to attend and need special assistance, such as sign language interpretation or other reasonable accommodations, should notify the Contact Person listed below in advance of the meeting.

The meeting will be closed to the public in accordance with the provisions set forth in sections 552b(c)(4) and 552b(c)(6), Title 5 U.S.C., as amended. The grant applications and/or contract proposals and the discussions could disclose confidential trade secrets or commercial property such as patentable material, and personal information concerning individuals associated with the grant

applications and/or contract proposals, the disclosure of which would constitute a clearly unwarranted invasion of personal privacy.

Name of Committee: Fogarty International Center Advisory Board.

Date: February 5, 2002.

Agenda: Report of the Director on updates and an overview of new FIC programs and initiatives. In addition, a discussion of CDC plans, present and future, for international programs and global health concerns.

Place: Lawton Chiles International House, 16 Center Drive (Building 16), Bethesda, MD 20892.

Closed: 1 pm to Adjournment.

Agenda: To review and evaluate grant applications.

Place: Lawton Chiles International House, 16 Center Drive (Building 16), Bethesda, MD 20892.

Contact Person: Irene W. Edwards, Information Officer, Fogarty International Center, National Institutes of Health, Building 31, Room B2C08, 31 Center Drive MSC 2220, Bethesda, MD 20892, 301–496–2075.

This notice is being published less than 15 days prior to the meeting due to the timing limitations imposed by the review and funding cycle.

Information is also available on the Institute's/Center's home page: *www.nih.gov/fic/about/advisory.html,* where an agenda and any additional information for the meeting will be posted when available.

(Catalogue of Federal Domestic Assistance Program Nos. 93.106, Minority International Research Training Grant in the Biomedical and Behavioral Sciences; 93.154, Special International Postdoctoral Research Program in Acquired Immunodeficiency Syndrome; 93.168, International Cooperative Biodiversity Groups Program; 93.934, Fogart International Research Collaboration Award; 93.989, Senior International Fellowship Awards Program, National Institutes of Health, HHS)

Dated: January 25, 2002.

LaVerne Y. Stringfield,

Director, Office of Federal Advisory Committee Policy.

[FR Doc. 02–2393 Filed 1–30–02; 8:45 am]

BILLING CODE 4140–01–M

DEPARTMENT OF HEALTH AND HUMAN SERVICES

National Institutes of Health

National Center for Research Resources; Amended Notice of Meeting

Notice is hereby given of a change in the meeting of the General Clinical Research Centers Review Committee, February 12, 2002, 8 a.m. to February 14, 2002, 6 p.m., Holiday Inn—Chevy Chase, 5520 Wisconsin Avenue, Chevy Chase, MD 20815, which was published in the **Federal Register** on January 3, 2002, 67 FR 336–337.

The meeting has been changed to Feb. 12–13, 2002; the location remains the same. The meeting is partially closed to the public.

Dated: January 25, 2002.

LaVerne Y. Stringfield,

Director, Office of Federal Advisory Committee Policy.

[FR Doc. 02–2383 Filed 1–30–02; 8:45 am]

BILLING CODE 4140–01–M

DEPARTMENT OF HEALTH AND HUMAN SERVICES

National Institutes of Health

National Center for Research Resources; Notice of Closed Meeting

Pursuant to section 10(d) of the Federal Advisory Committee Act, as amended (5 U.S.C. Appendix 2), notice is hereby given of the following meeting.

The meeting will be closed to the public in accordance with the provisions set forth in sections 552b(c)(4) and 552b(c)(6), Title 5 U.S.C., as amended. The grant applications and the discussions could disclose confidential trade secrets or commercial property such as patentable material, and personal information concerning individuals associated with the grant applications, the disclosure of which would constitute a clearly unwarranted invasion of personal privacy.

Name of Committee: National Center for Research Resources Special Emphasis Panel, General Clinical Research Centers.

Date: February 11, 2002.

Time: 9 am to Adjournment.

Agenda: To review and evaluate grant applications.

Place: Office of Review, National Center for Research Resources, 6705 Rockledge Drive, Bethesda, MD 20892, (Telephone Conference Call).

Contact Person: Sheryl K. Brining, PhD, Scientific Review Administrator, Office of Review, National Center for Research Resources, National Institutes of Health, One Rockledge Center, MSC 7965, 6705 Rockledge Drive, Suite 6018, Bethesda, MD 20892–7965, 301–435–0809, *brinings@ncrr.nih.gov*.

This notice is being published less than 15 days prior to the meeting due to the timing limitations imposed by the review and funding cycle.

(Catalogue of Federal Domestic Assistance Program Nos. 93.306, Comparative Medicine, 93.306; 93.333, Clinical Research, 93.333; 93.371, Biomedical Technology; 93.389, Research Infrastructure, National Institutes of Health, HHS)

Dated: January 25, 2002.

LaVerne Y. Stringfield,

Director, Office of Federal Advisory Committee Policy.

[FR Doc. 02–2388 Filed 1–30–02; 8:45 am]

BILLING CODE 4140–01–M

DEPARTMENT OF HEALTH AND HUMAN SERVICES

National Institutes of Health

National Eye Institute; Notice of Closed Meeting

Pursuant to section 10(d) of the Federal Advisory Committee Act, as amended (5 U.S.C. Appendix 2), notice is hereby given of the following meeting.

The meeting will be closed to the public in accordance with the provisions set forth in sections 552b(c)(4) and 552b(c)(6), Title 5 U.S.C., as amended. The grant applications and the discussions could disclose confidential trade secrets or commercial property such as patentable material, and personal information concerning individuals associated with the grant applications, the disclosure of which would constitute a clearly unwarranted invasion of personal privacy.

Name of Committee: National Eye Institute Special Emphasis Panel.

Date: January 30, 2002.

Time: 11 am to 12:30 pm.

Agenda: To review and evaluate grant applications.

Place: 6120 Executive Blvd. Suite 350, Rockville, MD 20892. (Telephone Conference Call)

Contact Person: Samuel Rawlings, PhD, Chief, Scientific Review Branch, Division of Extramural Research, National Eye Institute, Bethesda, MD 20892, 301–496–5561.

This notice is being published less than 15 days prior to the meeting due to the timing limitations imposed by the review and funding cycle.

(Catalogue of Federal Domestic Assistance Program Nos. 93.867, Vision Research, National Institutes of Health, HHS)

Dated: January 25, 2002.

LaVerne Y. Stringfield,

Director, Office of Federal Advisory Committee Policy.

[FR Doc. 02–2391 Filed 1–30–02; 8:45 am]

BILLING CODE 4140–01–M

DEPARTMENT OF HEALTH AND HUMAN SERVICES

National Institutes of Health

National Institute of Mental Health; Notice of Closed Meeting

Pursuant to section 10(d) of the Federal Advisory Committee Act, as amended (5 U.S.C. Appendix 2), notice is hereby given of the following meeting.

The meeting will be closed to the public in accordance with the provisions set forth in sections 552b(c)(4) and 552b(c)(6), Title 5 U.S.C., as amended. The grant applications and the discussions could disclose confidential trade secrets or commercial property such as patentable material, and personal information concerning individuals associated with the grant applications, the disclosure of which would constitute a clearly unwarranted invasion of personal privacy.

Name of Committee: National Institute of Mental Health Special Emphasis Panel.

Date: February 5, 2002.

Time: 1 P.M. to 3 P.M.

Agenda: To review and evaluate grant applications.

Place: Neuroscience Center, National Institutes of Health, 6001 Executive Blvd., Bethesda, MD 20892, (Telephone Conference Call).

Contact Person: Richard E. Weise, PhD, Scientific Review Administrator, Division of Extramural Activities, National Institute of Mental Health, NIH, Neuroscience Center, 6001 Executive Boulevard, Room 6140, MSC9606, Bethesda, MD 20892–9606, 301–443–1225, *rweise@mail.nih.gov.*

This notice is being published less than 15 days prior to the meeting due to the timing limitations imposed by the review and funding cycle.

(Catalogue of Federal Domestic Assistance Program Nos. 93.242, Mental Health Research Grants; 93.281, Scientist Development Award, Scientist Development Award for Clinicians, and Research Scientist Award; 93.282, Mental Health National Research Service Awards for Research Training, National Institutes of Health, HHS)

Dated: January 25, 2002.

LaVerne Y. Stringfield,

Director, Office of Federal Advisory Committee Policy.

[FR Doc. 02–2384 Filed 1–30–02; 8:45 am]

BILLING CODE 4140–01–M

DEPARTMENT OF HEALTH AND HUMAN SERVICES

National Institutes of Health

National Institute on Alcohol Abuse and Alcoholism; Notice of Closed Meeting

Pursuant to section 10(d) of the Federal Advisory Committee Act, as amended (5 U.S.C. Appendix 2), notice is hereby given of the following meeting.

The meeting will be closed to the public in accordance with the provisions set forth in sections 552b(c)(4) and 552b(c)(6), Title 5 U.S.C., as amended. The grant applications and the discussions could disclose confidential trade secrets or commercial property such as patentable material, and personal information concerning individuals associated with the grant applications, the disclosure of which would constitute a clearly unwarranted invasion of personal privacy.

Name of Committee: National Institute on Alcohol Abuse and Alcoholism Special Emphasis Panel.

Date: February 14, 2002.

Time: 4 PM to 5:30 PM.

Agenda: To review and evaluate grant applications.

Place: Bethesda Marriott Hotel, 5151 Pooks Hill Road, Bethesda, MD 20814.

Contact Person: L Tony Beck, PhD, Scientific Review Administrator, National Institute on Alcohol Abuse and Alcoholism, National Institutes of Health, Suite 409, 6000 Executive Blvd., MSC 7003, Bethesda, MD 20892–7003, 301–443–0913, *lbeck@mail.nih.gov.*

(Catalogue of Federal Domestic Assistance Program Nos. 93.271, Alcohol Research Career Development Awards for Scientists and Clinicians; 93.272, Alcohol National Research Service Awards for Research Training; 93.273, Alcohol Research Programs; 93.893, Alcohol Research Center Grants, National Institutes of Health, HHS)

Dated: January 25, 2002.

LaVerne Y. Stringfield,

Director, Office of Federal Advisory Committee Policy.

[FR Doc. 02–2387 Filed 1–30–02; 8:45 am]

BILLING CODE 4140–01–M

DEPARTMENT OF HEALTH AND HUMAN SERVICES

National Institutes of Health

National Institute of Dental and Craniofacial Research; Notice of Closed Meetings

Pursuant to section 10(d) of the Federal Advisory Committee Act, as amended (5 U.S.C. Appendix 2), notice is hereby given of the following meetings.

The meetings will be closed to the public in accordance with the provisions set forth in sections 552b(c)(4) and 552b(c)(6), Title 5 U.S.C., as amended. The grant applications and the discussions could disclose confidential trade secrets or commercial property such as patentable material, and personal information concerning individuals associated with the grant applications, the disclosure of which would constitute a clearly unwarranted invasion of personal privacy.

Name of Committee: National Institute of Dental and Craniofacial Research Special Emphasis Panel, 02–43, Review of R13 Grants.

Date: February 25, 2002.

Time: 12 PM to 2 PM.

Agenda: To review and evaluate grant applications.

Place: 45 Center Drive, Bethesda, MD 20892, (Telephone Conference Call).

Contact Person: H. George Hausch, PhD. Acting Director, 45 Center Drive, Natcher Building, Rm. 4AN44F, National Institutes of Health, Bethesda, MD 20892, (301) 594–2372.

Name of Committee: National Institute of Dental and Craniofacial Research Special Emphasis Panel, 02–58, Review of R44 Grants.

Date: March 4, 2002.

Time: 10 AM to 12:30 PM.

Agenda: To review and evaluate grant applications.

Place: 45 Center Drive, Natcher Building, Conference Room E1/2, Bethesda, MD 20892, (Telephone Conference Call).

Contact Person: Philip Washko, PhD, DMD, Scientific Review Administrator, 45 Center Drive, Natcher Building, Rm. 4AN44F, National Institutes of Health, Bethesda, MD 20892, (301) 594–2372.

Name of Committee: National Institute of Dental and Craniofacial Research Special Emphasis Panel, 02–59, Review of R44 Grants.

Date: March 4, 2002.

Time: 1:30 PM to 3 PM.

Agenda: To review and evaluate grant applications.

Place: 45 Center Drive, Bethesda, MD 20892, (Telephone Conference Call).

Contact Person: Philip Washko, PhD, DMD, Scientific Review Administrator, 45 Center Drive, Natcher Building, Rm. 4AN44F, National Institutes of Health, Bethesda, MD 20892, (301) 594–2372.

(Catalogue of Federal Domestic Assistance Program Nos. 93.121, Oral Diseases and Disorders Research, National Institutes of Health, HHS)

Dated: January 25, 2002.

LaVerne Y. Stringfield,

Director, Office of Federal Advisory Committee Policy.

[FR Doc. 02–2389 Filed 1–30–02; 8:45 am]

BILLING CODE 4140–01–M

DEPARTMENT OF HEALTH AND HUMAN SERVICES

National Institutes of Health

National Institute of Environmental Health Sciences; Notice of Closed Meetings

Pursuant to section 10(d) of the Federal Advisory Committee Act, as amended (5 U.S.C. Appendix 2), notice is hereby given of the following meetings.

The meetings will be closed to the public in accordance with the provisions set forth in sections 552b(c)(4) and 552b(c)(6), Title 5 U.S.C., as amended. The grant applications and/or contract proposals and the discussions could disclose confidential trade secrets or commercial property such as patentable material, and personal information concerning individuals associated with the grant applications and/or contract proposals, the disclosure of which would constitute a clearly unwarranted invasion of personal privacy.

Name of Committee: National Institute of Environmental Health Sciences Special Emphasis Panel, Review of P01 Grant Applications.

Date: February 26, 2002.

Time: 8:30 am to 5 pm.

Agenda: To review and evaluate grant applications.

Place: Hawthorn Suites Hotel, 300 Meredith Drive, Durham, NC 27713.

Contact Person: Ethel B. Jackson, DDS, Chief, Scientific Review Branch, Office of Program Operations, Division of Extramural Research and Training, Nat. Institute of Environmental Health Sciences, P.O. Box 12233, MD EC–30, Research Triangle Park, NC 27709, 919/514–7846, jackson4@niehs.nih.gov.

Name of Committee: National Institute of Environmental Health Sciences Special Emphasis Panel, RFP 01–18–National Center for Toxicogenomics (NCT) Microarray Resource.

Date: March 4, 2002.

Time: 8:30 am to 5 pm.

Agenda: To review and evaluate contract proposals.

Place: Hawthorn Suites Hotel, 300 Meredith Drive, Durham, NC 27713.

Contact Person: RoseAnne M. McGee, BS, Associate Scientific Review Administrator, Scientific Review Branch, Office of Program Operations, Division of Extramural Research and Training, Nat. Inst. of Environmental Health Sciences, Research Triangle Park, NC 27709, 919/541–0752.

(Catalogue of Federal Domestic Assistance Program Nos. 93.113, Biological Response to Environmental Health Hazards; 93.114, Applied Toxicological Research and Testing; 93.115, Biometry and Risk Estimation—Health Risks from Environmental Exposures; 93.142, NIEHS Hazardous Waste Worker Health and Safety Training; 93.143, NIEHS Superfund Hazardous Substances—Basic Research and Education; 93.894, Resources and Manpower Development in the Environmental Health Sciences, National Institutes of Health, HHS)

Dated: January 25, 2002.

LaVerne Y. Stringfield,

Director, Office of Federal Advisory Committee Policy.

[FR Doc. 02–2390 Filed 1–30–02; 8:45 am]

BILLING CODE 4140–01–M

DEPARTMENT OF HEALTH AND HUMAN SERVICES

National Institutes of Health

National Institute of Allergy and Infectious Diseases; Notice of Closed Meeting

Pursuant to section 10(d) of the Federal Advisory Committee Act, as amended (5 U.S.C. Appendix 2), notice is hereby given of the following meeting.

The meeting will be closed to the public in accordance with the provisions set forth in sections 552b(c)(4) and 552b(c)(6), Title 5 U.S.C., as amended. The grant applications and the discussions could disclose confidential trade secrets or commercial property such as patentable material, and personal information concerning individuals associated with the grant applications, the disclosure of which would constitute a clearly unwarranted invasion of personal privacy.

Name of Committee: National Institute of Allergy and Infectious Diseases Special Emphasis Panel.

Date: February 14, 2002.

Time: 12:30 pm to 3:30 pm.

Agenda: To review and evaluate grant applications.

Place: 6700–B Rockledge Drive, Room 2224, Bethesda, MD 20892. (Telephone Conference Call)

Contact Person: Gregory P. Jarosik, PhD, Scientific Review Administrator, Scientific Review Program, Division of Extramural Activities, NIAID, 6700B Rockledge Drive, MSC–7616, Bethesda, MD 20892, 301–496–2550, *gjarosik@niaid,nih.gov.*

(Catalogue of Federal Domestic Assistance Program Nos. 93.855, Allergy, Immunology, and Transplantation Research; 93.856, Microbiology and Infectious Diseases Research, National Institutes of Health, HHS)

Dated: January 25, 2002.

LaVerne Y. Stringfield,

Director, Office of Federal Advisory Committee Policy.

[FR Doc. 02–2392 Filed 1–30–02; 8:45 am]

BILLING CODE 4140–01–M

DEPARTMENT OF HEALTH AND HUMAN SERVICES

National Institutes of Health

National Institute on Drug Abuse; Notice of Closed Meetings

Pursuant to section 10(d) of the Federal Advisory Committee Act, as amended (5 U.S.C. Appendix 2), notice is hereby given of the following meetings.

The meetings will be closed to the public in accordance with the provisions set forth in sections 552b(c)(4) and 552b(c)(6), Title 5 U.S.C., as amended. The grant applications and the discussions could disclose confidential trade secrets or commercial property such as patentable material, and personal information concerning individuals associated with the grant applications, the disclosure of which would constitute a clearly unwarranted invasion of personal privacy.

Name of Committee: National Institute on Drug Abuse Special Emphasis Panel, Medication Development.

Date: February 26, 2002.

Time: 10 am to 10:45 am.

Agenda: To review and evaluate grant applications.

Place: The Westin Grand Hotel, 2350 M Street, NW., Washington, DC 20037.

Contact Person: Mark Swieter, PhD, Health Scientist Administrator, Office of Extramural Affairs, National Institute on Drug Abuse, National Institutes of Health, DHHS, 6001 Executive Boulevard, Room 3158, MSC 9547, Bethesda, MD 20892–9547, (301) 435–1389.

Name of Committee: National Institute on Drug Abuse Special Emphasis Panel, Medication Development.

Date: February 26, 2002.

Time: 10:45 am to 11:30 am.

Agenda: To review and evaluate grant applications.

Place: The Westin Grand Hotel, 2350 M Street, NW., Washington, DC 20037.

Contact Person: Mark Swieter, PhD, Health Scientist Administrator, Office of Extramural Affairs, National Institute on Drug Abuse, National Institutes of Health, DHHS, 6001 Executive Boulevard, Room 3158, MSC 9547, Bethesda, MD 20892–9547, (301) 435–1389.

Name of Committee: National Institute on Drug Abuse Special Emphasis Panel, Treatment Research.

Date: February 26, 2002.

Time: 2 pm to 5 pm.

Agenda: To review and evaluate grant applications.

Place: Swissotel Washington, The Watergate, 2650 Virginia Ave., NW., Washington, DC 20037.

Contact Person: Mark R. Green, PhD, Chief, CEASRB, Office of Extramural Affairs, National Institute on Drug Abuse, National Institutes of Health, DHHS, Suite 3158, 6001 Executive Boulevard, Bethesda, MD 20892–9547, (301) 435–1431.

(Catalogue of Federal Domestic Assistance Program Nos. 93.277, Drug Abuse Scientist Development Award for Clinicians, Scientist Development Awards, and Research Scientist Awards; 93.278, Drug Abuse National Research Service Awards for Research Training; 93.279, Drug Abuse Research Programs, National Institutes of Health, HHS)

Dated: January 25, 2002.

LaVerne Y. Stringfield,

Director, Office of Federal Advisory Committee Policy.

[FR Doc. 02–2394 Filed 1–30–02; 8:45 am]

BILLING CODE 4140–01–M

DEPARTMENT OF HEALTH AND HUMAN SERVICES

National Institutes of Health

National Institute on Drug Abuse; Notice of Closed Meeting

Pursuant to section 10(d) of the Federal Advisory Committee Act, as amended (5 U.S.C. Appendix 2), notice is hereby given of the following meetings.

The meetings will be closed to the public in accordance with the provisions set forth in sections 552b(c)(4) and 552b(c)(6), Title 5 U.S.C., as amended. The contract proposals and the discussions could disclose confidential trade secrets or commercial property such as patentable material, and personal information concerning individuals associated with the contract proposals, the disclosure of which would constitute a clearly unwarranted invasion of personal privacy.

Name of Committee: National Institute on Drug Abuse Special Emphasis Panel, ''Develop Prevention Services Analytic Tools for Improved Substance Abuse Prevention Delivery''.

Date: January 31, 2002.

Time: 9:30 am to 11:30 pm.

Agenda: To review and evaluate contract proposals.

Place: Neuroscience Center, National Institutes of Health, 6001 Executive Blvd., Rockville, MD 20852. (Telephone Conference Call)

Contact Person: Lyle Furr, Contract Review Specialist, Office of Extramural Affairs, National Institute on Drug Abuse, National Institutes of Health, DHHS, 6001 Executive Boulevard, Room 3158, MSC 9547, Bethesda, MD 20892–9547, (301) 435–1439.

This notice is being published less than 15 days prior to the meeting due to the timing limitations imposed by the review and funding cycle.

Name of Committee: National Institute on Drug Abuse Special Emphasis Panel, ''Develop and Maintain Substance Abuse Prevention Methodological Software''.

Date: February 7, 2002.

Time: 9:30 am to 5 pm.

Agenda: To review and evaluate contract proposals.

Place: Bethesda Marriott Hotel, 5151 Pooks Hill Road, Bethesda, MD 20814.

Contact Person: Lyle Furr, Contract Review Specialist, Office of Extramural Affairs, National Institute on Drug Abuse, National Institutes of Health, DHHS, 6001 Executive Boulevard, Room 3158, MSC 9547, Bethesda, MD 20892–9547, (301) 435–1439.

This notice is being published less than 15 days prior to the meeting due to the timing limitations imposed by the review and funding cycle.

(Catalogue of Federal Domestic Assistance Program Nos. 93.277, Drug Abuse Scientist Development Award for Clinicians, Scientist Development Awards, and Research Scientist Awards; 93.278, Drug Abuse National Research Service Awards for Research Training; 93.279, Drug Abuse Research Programs, National Institutes of Health, HHS)

Dated: January 25, 2002.

LaVerne Y. Stringfield,

Director, Office of Federal Advisory Committee Policy.

[FR Doc. 02–2395 Filed 1–30–02; 8:45 am]

BILLING CODE 4140–01–M

DEPARTMENT OF HEALTH AND HUMAN SERVICES

National Institutes of Health

National Institute on Drug Abuse; Notice of Closed Meetings

Pursuant to section 10(d) of the Federal Advisory Committee Act, as amended (5 U.S.C. Appendix 2), notice is hereby given of the following meetings.

The meetings will be closed to the public in accordance with the provisions set forth in sections 552b(c)(4) and 552b(c)(6), Title 5 U.S.C., as amended. The contract proposals and the discussions could disclose confidential trade secrets or commercial property such as patentable material, and personal information concerning individuals associated with the contract proposals, the disclosure of which would constitute a clearly unwarranted invasion of personal privacy.

Name of Committee: National Institute on Drug Abuse Special Emphasis Panel, ''Prevention Training''.

Date: February 13, 2002.

Time: 9:30 am to 11:30 pm.

Agenda: To review and evaluate contract proposals.

Place: Neuroscience Center, National Institutes of Health, 6001 Executive Blvd. Rockville, MD 20852. (Telephone conference Call)

Contact Person: Lyle Furr, Contract Review Specialist, Office of Extramural Affairs, National Institute on Drug Abuse, National Institutes of Health, DHHS, 6001 Executive Boulevard, Room 3158, MSC 9547, Bethesda, MD 20892–9547, (301) 435–1439.

This notice is being published less than 15 days prior to the meeting due to the timing limitations imposed by the review and funding cycle.

Name of Committee: National Institute on Drug Abuse Special Emphasis Panel, ''Virtual Reality for Treatment of Pain''.

Date: February 13, 2002.

Time: 1:30 pm to 3:30 pm.

Agenda: To review and evaluate contract proposals.

Place: Neuroscience Center, National Institutes of Health, 6001 Executive Blvd. Rockville, MD 20852. (Telephone conference Call)

Contact Person: Eric Zatman, Contract Review Specialist, Office of Extramural Affairs, National Institute on Drug Abuse, National Institutes of Health, DHHS, 6001 Executive Boulevard, Room 3158, MSC 9547, Bethesda, MD 20892–9547, (301) 435–1438.

This notice is being published less than 15 days prior to the meeting due to the timing limitations imposed by the review and funding cycle.

Name of Committee: National Institute on Drug Abuse Special Emphasis Panel, ''Administrative and Meeting Support for the Clinical Trials Network''.

Date: March 5–6, 2002.

Time: 9 am to 5 pm.

Agenda: To review and evaluate contract proposals.

Place: Bethesda Marriott Hotel, 5151 Pooks Hill Road, Bethesda, MD 20814.

Contact Person: Eric Zatman, Contract Review Specialist, Office of Extramural Affairs, National Institute on Drug Abuse, National Institutes of Health, DHHS, 6001 Executive Boulevard, Room 3158, MSC 9547, Bethesda, MD 20892–9547, (301) 435–1438.

(Catalogue of Federal Domestic Assistance Program Nos. 93.277, Drug Abuse Scientist Development Award for Clinicians, Scientist Development Awards, and Research Scientist Awards; 93.278, Drug Abuse National Research Service Awards for Research Training; 93.279, Drug Abuse Research Programs, National Institutes of Health, HHS)

Dated: January 25, 2002.

LaVerne Y. Stringfield,

Director, Office of Federal Advisory Committee Policy.

[FR Doc. 02–2396 Filed 1–30–02; 8:45 am]

BILLING CODE 4140–01–M

DEPARTMENT OF HEALTH AND HUMAN SERVICES

National Institutes of Health

National Institute on Deafness and Other Communication Disorders; Notice of Closed Meeting

Pursuant to section 10(d) of the Federal Advisory Committee Act, as amended (5 U.S.C. Appendix 2), notice is hereby given of the following meeting.

The meeting will be closed tot he public in accordance with the provisions set forth in sections 552b(c)(4) and 552b(c)(6), Title 5 U.S.C.,

as amended. The grant applications and the discussions could disclose confidential trade secrets or commercial property such as patentable material, and personal information concerning individuals associated with the grant applications, the disclosure of which would constitute a clearly unwarranted invasion of personal privacy.

Name of Committee: National Institute of Deafness and Other Communications Special Emphasis Panel.

Date: February 28, 2002.

Time: 9 a.m. to 2 p.m.

Agenda: To review and evaluate grant applications.

Place: St. Gregory Hotel & Suites, 2033 M Street, NW., Washington, DC 20036.

Contact Person: Melissa Stick, PhD, MPH, Scientific Review Administrator, Scientific Review Branch, Division of Extramural Research, NIDCD/NIH, 6120 Executive Blvd., Bethesda, MD 20892, 301–496–8683.

(Catalogue of Federal Domestic Assistance Program Nos. 93.173, Biological Research Related to Deafness and Communicative Disorders, National Institutes of Health, HHS)

Dated: January 25, 2002.

LaVerne Y. Stringfield,

Director, Office of Federal Advisory Committee Policy.

[FR Doc. 02–2397 Filed 1–30–02; 8:45 am]

BILLING CODE 4140–01–M

DEPARTMENT OF HEALTH AND HUMAN SERVICES

National Institutes of Health

National Institute of Environmental Health Sciences; Notice of Closed Meeting

Pursuant to section 10(d) of the Federal Advisory Committee Act as amended (5 U.S.C. Appendix 2), notice is hereby given of the following meeting.

The meeting will be closed to the public in accordance with the provisions set forth in sections 552b(c)(4) and 552b(c)(6), Title 5 U.S.C., as amended. The grant applications and the discussions could disclose confidential trade secrets or commercial property such as patentable material, and personal information concerning individuals associated with the grant applications, the disclosure of which would constitute a clearly unwarranted invasion of personal privacy.

Name of Committee: National Institute of Environmental Health Sciences Special Emphasis Panel, Review of Conference Grant (R13) Applications.

Date: February 26, 2002.

Time: 1 pm to 1:30 pm.

Agenda: To review and evaluate grant applications.

Place: NIEHS—East Campus, 79 TW Alexander Drive, Building 4401, Room 3446, Research Triangle Park, NC 27709 (Telephone Conference Call).

Contact Person: RoseAnne M McGee, BS, Associate Scientific Review Administrator, Scientific Review Branch, Office of Program Operations, Division of Extramural Research and Training, Nat. Inst. of Environmental Health Sciences, Research Triangle Park, NC 27709, 919/541–0752.

(Catalogue of Federal Domestic Assistance Program Nos. 93.113, Biological Response to Environmental Health Hazards; 93.114, Applied Toxicological Research and Testing; 93.115, Biometry and Risk Estimation—Health Risks from Environmental Exposures; 93.142, NIEHS Hazardous Waste Worker Health and Safety Training; 93.143, NIEHS Superfund Hazardous Substances—Basic Research and Education; 93.894, Resources and Manpower Development in the Environmental Health Sciences, National Institutes of Health, HHS)

Dated: January 25, 2002.

LaVerne Y. Stringfield,

Director, Office of Federal Advisory Committee Policy.

[FR Doc. 02–2398 Filed 1–30–02; 8:45 am]

BILLING CODE 4140–01–M

DEPARTMENT OF HEALTH AND HUMAN SERVICES

National Institutes of Health

National Library of Medicine; Notice of Closed Meeting

Pursuant to section 10(d) of the Federal Advisory Committee Act, as amended (5 U.S.C. Appendix 2), notice is hereby given of the following meeting.

The meeting will be closed to the public in accordance with the provisions set forth in sections 552b(c)(4) and 552b(c)(6), Title 5 U.S.C., as amended. The contract proposals and the discussions could disclose confidential trade secrets or commercial property such as patentable material, and personal information concerning individuals associated with the contract proposals, the disclosure of which would constitute a clearly unwarranted invasion of personal privacy.

Name of Committee: National Library of Medicine Special Emphasis Panel.

Date: February 27, 2002.

Time: 10:30 am to 11:30 am.

Agenda: To review and evaluate contract proposals.

Place: National Library of Medicine, Building 38A, HPCC Conference Room B1N30Q, 8600 Rockville Pike, Bethesda, MD 20894. (Telephone Conference Call)

Contact Person: Susan Sparks, PhD, Senior Education Specialist, National Library of Medicine, Extramural Programs, Rockledge One, 6705 Rockledge Drive, Suite 301, Bethesda, MD 20892.

(Catalogue of Federal Domestic Assistance Program Nos. 93.879, Medical Library Assistance, National Institutes of Health, HHS)

Dated: January 25, 2002.

LaVerne Y. Stringfield,

Director, Office of Federal Advisory Committee Policy.

[FR Doc. 02–2399 Filed 1–30–02; 8:45 am]

BILLING CODE 4140–01–M

DEPARTMENT OF HEALTH AND HUMAN SERVICES

National Institutes of Health

Center for Scientific Review; Notice of Closed Meetings

Pursuant to section 10(d) of the Federal Advisory Committee Act, as amended (5 U.S.C. Appendix 2), notice is hereby given of the following meetings.

The meetings will be closed to the public in accordance with the provisions set forth in sections 552b(c)(4) and 552b(c)(6), Title 5 U.S.C., as amended. The grant applications and the discussions could disclose confidential trade secrets or commercial property such as patentable material, and personal information concerning individuals associated with the grant applications, the disclosure of which would constitute a clearly unwarranted invasion of personal privacy.

Name of Committee: Center for Scientific Review Special Emphasis Panel.

Date: February 7–8, 2002.

Time: 8:30 AM to 3 PM.

Agenda: To review and evaluate grant applications.

Place: Georgetown Suites, 1000 29th St., NW, Washington, DC 20007.

Contact Person: Marcia Steinberg, PhD, Scientific Review Administrator, Center for Scientific Review, National Institutes of Health, 6701 Rockledge Drive, Room 5140, MSC 7840, Bethesda, MD 20892, (301) 435–1023, *steinberm@csr.nih.gov.*

This notice is being published less than 15 days prior to the meeting due to the timing limitations imposed by the review and funding cycle.

Name of Committee: Endocrinology and Reproductive Sciences Integrated Review Group, Reproduction Biology Study Section.

Date: February 11–12, 2002.

Time: 8 AM to 3 PM.

Agenda: To review and evaluate grant applications.

Place: The Hyatt Regency Hotel, One Bethesda Metro Center, Bethesda, MD 20814.

Contact Person: Dennis Leszczynski, PhD, Scientific Review Administrator, Center for Scientific Review, National Institutes of Health, 6701 Rockledge Drive, Room 6170, MSC 7892, Bethesda, MD 20892, (301) 435–1044.

Name of Committee: Endocrinology and Reproductive Sciences Integrated Review

Group, Biochemical Endocrinology Study Section.

Date: February 11–12, 2002.

Time: 8 AM to 5 PM.

Agenda: To review and evaluate grant applications.

Place: Embassy Suites Hotel, The Chevy Chase Pavilion, 4300 Military Road NW, Wisconsin at Western Avenue, Washington, DC 20015.

Contact Person: Michael Knecht, PhD, Scientific Review Administrator, Center for Scientific Review, National Institutes of Health, 6701 Rockledge Drive, Room 6176, MSC 7892, Bethesda, MD 20892, (301) 435–1046.

Name of Committee: Endocrinology and Reproductive Sciences Integrated Review Group, Reproductive Endocrinology Study Section.

Date: February 11–12, 2002.

Time: 8 AM to 3 PM.

Agenda: To review and evaluate grant applications.

Place: Courtyard By Marriott, 805 Russell Avenue, Gaithersburg, MD 20879.

Contact Person: Abubakar A. Shaikh, DVM, PHD, Scientific Review Administrator, Center for Scientific Review, National Institutes of Health, 6701 Rockledge Drive, Room 6166, MSC 7892, Bethesda, MD 20892, (301) 435–1042.

Name of Committee: Nutritional and Metabolic Sciences Integrated Review Group, Nutrition Study Section.

Date: February 11–12, 2002.

Time: 8:30 AM to 4 PM.

Agenda: To review and evaluate grant applications.

Place: Hyatt Regency Hotel, One Bethesda Metro Center, Bethesda, MD 20814.

Contact Person: Sooja K. Kim, PHD, RD, Scientific Review Administrator, Center for Scientific Review, National Institutes of Health, 6701 Rockledge Drive, Room 6178, MSC 7892, Bethesda, MD 20892, (301) 435–1780.

Name of Committee: Oncological Sciences Integrated Review Group, Experimental Therapeutics Subcommittee 2.

Date: February 11–13, 2002.

Time: 8:30 AM to 5 PM.

Agenda: To review and evaluate grant applications.

Place: Embassy Suites Hotel, The Chevy Chase Pavilion, 4300 Military Road NW., Wisconsin at Western Avenue, Washington, DC 20015.

Contact Person: Marcia Litwack, PHD, Scientific Review Administrator, Center for Scientific Review, National Institutes of Health, 6701 Rockledge Drive, Room 4150, MSC 7804, Bethesda, MD 20892, (301) 435–1719.

Name of Committee: Biobehavioral and Behavioral Process Initial Review Group, Biobehavioral and Behavioral Processes 2.

Date: February 11–12, 2002.

Time: 9 AM to 5 PM.

Agenda: To review and evaluate grant applications.

Place: The Melrose Hotel, 2430 Pennsylvania Ave., NW., Washington, DC 20037.

Contact Person: Thomas A. Tatham, PHD, Scientific Review Administrator, Center for Scientific Review, National Institutes of Health, 6701 Rockledge Drive, Room 3188, MSC 7848, Bethesda, MD 20892, (301) 435–0692. *tathamt@csr.nih.gov.*

Name of Committee: Center for Scientific Review Special Emphasis Panel.

Date: February 11, 2002.

Time: 9 AM to 5 PM.

Agenda: To review and evaluate grant applications.

Place: Hyatt Regency Bethesda, One Bethesda Metro Center, Bethesda, MD 20814.

Contact Person: Richard Marcus, PHD, Scientific Review Administrator, Center for Scientific Review, National Institutes of Health, 6701 Rockledge Drive, Room 5168, MSC 7844, Bethesda, MD 20892, (301) 435–1245, *richard.marcus@nih.gov.*

Name of Committee: Immunological Sciences Integrated Review Group, Immunobiology Study Section.

Date: February 12–13, 2002.

Time: 8:30 AM to 3 PM.

Agenda: To review and evaluate grant applications.

Place: Holiday Inn, 5520 Wisconsin Avenue, Chevy Chase, MD 20815.

Contact Person: Betty Hayden, PHD, Scientific Review Administrator, Center for Scientific Review, National Institutes of Health, 6701 Rockledge Drive, Room 4206, MSC 7812, Bethesda, MD 20892, (301) 435–1223.

Name of Committee: Integrative, Functional and Cognitive Neuroscience Integrated Review Group, Visual Sciences B Study Section.

Date: February 12–13, 2002.

Time: 8:30 AM to 4 PM.

Agenda: To review and evaluate grant applications.

Place: Georgetown Holiday Inn, 2101 Wisconsin Avenue, NW, Washington, DC 20007.

Contact Person: Christine Melchior, PHD, Scientific Review Administrator, Center for Scientific Review, National Institutes of Health, 6701 Rockledge Drive, Room 5176 MSC 7844, Bethesda, MD 20892, (301) 435–1713, *melchioc@csr.nih.gov.*

Name of Committee: Center for Scientific Review Special Emphasis Panel.

Date: February 12, 2002.

Time: 9 AM to 5 PM.

Agenda: To review and evaluate grant applications.

Place: Embassy Suites Hotel, The Chevy Chase Pavilion, 4300 Military Road NW, Wisconsin at Western Avenue, Washington, DC 20015.

Contact Person: Weijia Ni, PHD, Scientific Review Administrator, Center for Scientific Review, National Institutes of Health, 6701 Rockledge Drive, Room 3190 MSC 7848, Bethesda, MD 20892, (301) 435–1507, *niw@csr.nih.gov.*

Name of Committee: Social Sciences, Nursing, Epidemiology and Methods Integrated Review Group, Epidemiology and Disease Control Subcommittee 1.

Date: February 14–15, 2002.

Time: 8 AM to 5 PM.

Agenda: To review and evaluate grant applications.

Place: Holiday Inn, 8120 Wisconsin Avenue, Bethesda, MD 20814.

Contact Person: J. Scott Osborne, PhD, MPH, Scientific Review Administrator, Center for Scientific Review, National Institutes of Health, 6701 Rockledge Drive, Room 4114 MSC 7816, Bethesda, MD 20892, (301) 435–1782.

Name of Committee: Cardiovascular Sciences Integrated Review Group, Hematology Subcommittee 1.

Date: February 14–15, 2002.

Time: 8 AM to 5 PM.

Agenda: To review and evaluate grant applications.

Place: Bethesda Holiday Inn, Versailles Ill, 8120 Wisconsin Avenue, Bethesda, MD 20814.

Contact Person: Robert Su, PhD, Scientific Review Administrator, Center for Scientific Review, National Institutes of Health, 6701 Rockledge Drive, Room 4134 MSC 7802, Bethesda, MD 20892, (301) 435–1195.

Name of Committee: Endocrinology and Reproductive Sciences Integrated Review Group, Endocrinology Study Section.

Date: February 14–15, 2002.

Time: 8 AM to 5 PM.

Agenda: To review and evaluate grant applications.

Place: Holiday Inn, 8120 Wisconsin Avenue, Bethesda, MD 20814.

Contact Person: Syed M. Amir, PhD, Scientific Review Administrator, Center for Scientific Review, National Institutes of Health, 6701 Rockledge Drive, Room 6168, MSC 7892, Bethesda, MD 20892, (301) 435–1043, *amirs@csr.nih.gov.*

Name of Committee: Center for Scientific Review Special Emphasis Panel.

Date: February 14–15, 2002.

Time: 8 AM to 5 PM.

Agenda: To review and evaluate grant applications.

Place: Embassy Suites, Chevy Chase Pavilion, 4300 Military Rd., Wisconsin at Western Ave., Washington, DC 20015.

Contact Person: Anne E Schaffner, PHD, Scientific Review Administrator, Center for Scientific Review, National Institutes of Health, 6701 Rockledge Drive, Room 5214, MSC 7850, Bethesda, MD 20892, (301) 435–1239, *schaffna@csr.nih.gov.*

Name of Committee: Center for Scientific Review Special Emphasis Panel.

Date: February 14–15, 2002.

Time: 8:30 AM to 6 PM.

Agenda: To review and evaluate grant applications.

Place: Savoy Suites Georgetown, 2505 Wisconsin Avenue, NW., Washington, DC 20007.

Contact Person: Lee S. Mann, PHD, JD, Scientific Review Administrator, Center for Scientific Review, National Institutes of Health, 6701 Rockledge Drive, Room 3186, MSC 7848, Bethesda, MD 20892, (301) 435–0677.

Name of Committee: Oncological Sciences Intergrated Review Group, Experimental Therapeutics Subcommittee 1.

Date: February 14–15, 2002.

Time: 8:30 AM to 5 PM.

Agenda: To review and evaluate grant applications.

Place: Arlington Hyatt, 1325 Wilson Boulevard, Arlington, VA 22209.

Contact Person: Philip Perkins, PHD, Scientific Review Administrator, Center for Scientific Review, National Institutes of Health, 6701 Rockledge Drive, Room 4148, MSC 7804, Bethesda, MD 20892, (301) 435–1718, *perkins@csr.nih.gov.*

Name of Committee: Genetic Sciences Integrated Review Group, Mammalian Genetics Study Section.

Date: February 14–15, 2002.

Time: 8:30 AM to 2:30 PM.

Agenda: To review and evaluate grant applications.

Place: Marriott Key Bridge, 1401 Lee Highway, Arlington, VA 22209.

Contact Person: Camilla Day, PHD, Scientific Review Administrator, Center for Scientific Review, National Institutes of Health, 6701 Rockledge Drive, Room 2208, MSC 7890, Bethesda, MD 20892, (301) 435–1037, *dayc@csr.nih.gov.*

Name of Committee: Biochemical Sciences Integrated Review Group, Medical Biochemistry Study Section.

Date: February 14–15, 2002.

Time: 8:30 AM to 3 PM.

Agenda: To review and evaluate grant applications.

Place: Governor's House, 1615 Rhode Island Avenue, NW., Washington, DC 20036.

Contact Person: Alexander S. Liacouras, PHD, Scientific Review Administrator, Center for Scientific Review, National Institutes of Health, 6701 Rockledge Drive, Room 5154, MSC 7842, Bethesda, MD 20892, (301) 435–1740.

Name of Committee: Immunological Sciences Integrated Review Group, Experimental Immunology Study Section.

Date: February 14–15, 2002.

Time: 8:30 AM to 4 PM.

Agenda: To review and evaluate grant applications.

Place: Holiday Inn—Chevy Chase, 5520 Wisconsin Avenue, Chevy Chase, MD 20815.

Contact Person: Cathleen L. Cooper, PHD, Scientific Review Administrator, Center for Scientific Review, National Institutes of Health, 6701 Rockledge Drive, Room 4208, MSC 7812, Bethesda, MD 30892, (301) 435–3566, *cooperc@csr.nih.gov.*

Name of Committee: Integrative, Function and Cognitive Neuroscience Integrated Review Group, Integrative, Functional and Cognitive Neuroscience 7.

Date: February 14–15, 2002.

Time: 8:30 AM to 5 PM.

Agenda: To review and evaluate grants applications.

Place: George Washington University Inn, 824 New Hampshire Ave., NW., Washington, DC 20037.

Contact Person: Bernard F. Driscoll, PHD, Scientific Review Administrator, Center for Scientific Review, National Institutes of Health, 6701 Rockledge Drive, Room 5158, MSC 7844, Bethesda, MD 20892, (301) 435–1242.

Name of Committee: Genetic Sciences Integrated Review Group, Genetics Study Section.

Date: February 14–16, 2002.

Time: 9 AM to 4 PM.

Agenda: To review and evaluate grants applications.

Place: The River Inn, 924 Twenty-Fifth Street, NW., Washington, DC 20037.

Contact Person: David J. Remondini, PHD, Scientific Review Administrator, Center for Scientific Review, National Institutes of Health, 6701 Rockledge Drive, Room 6154, MSC 7890, Bethesda, MD 20892, (301) 435–1038, *remondid@csr.nih.gov.*

Name of Committee: Center for scientific Review Special Emphasis Panel.

Date: February 15, 2002.

Time: 8:30 AM to 12:30 PM.

Agenda: To review and evaluate grants applications.

Place: Monarch Hotel, 2400 M Street, NW., Washington, DC 20037.

Contact Person: Randolph Addison, PHD, Scientific Review Administrator, Center for Scientific Review, National Institutes of Health, 6701 Rockledge Drive, Room 5144, MSC 7840, Bethesda, MD 20892, (301) 435–1025, *addisonr@csr.nih.gov.*

Name of Committee: Center for Scientific Review Special Emphasis Panel.

Date: February 15, 2002.

Time: 1:30 PM to 5:30 PM.

Agenda: To review and evaluate grants applications.

Place: Monarch Hotel, 2400 M Street, NW., Washington, DC 20037.

Contact Person: Randolph Addison, PHD, Scientific Review Administrator, Center for Scientific Review, National Institutes of Health, 6701 Rockledge Drive, Room 5144, MSC 7840, Bethesda, MD 20892, (301) 435–1025, *addisonr@csr.nih.gov.*

(Catalogue of Federal Domestic Assistance Program Nos. 93.306, Comparative Medicine, 93.306; 93.333, Clinical Research, 93.333, 93.337, 93.393–93.396, 93.837–93.844, 93.846–93.878, 93.892–93.893, National Institutes of Health, HHS)

Dated: January 25, 2002.

LaVerne Y. Stringfield,

Director, Office of Federal Advisory Committee Policy.

[FR Doc. 02–2385 Filed 1–30–02; 8:45 am]

BILLING CODE 4140–01–M

DEPARTMENT OF HEALTH AND HUMAN SERVICES

National Institutes of Health

Center for Scientific Review; Cancellation of Meeting

Notice is hereby given of the cancellation of the Cell Development and Function 4, February 7, 2002, 8:30 AM to February 8, 2002, 12:00 PM, Georgetown Suites, 1000 29th Street, NW., Washington, DC, 20007 which was published in the **Federal Register** on January 23, 2002, 67 FR 3221–3223.

The meeting is cancelled due to a quorum problem.

Dated: January 25, 2002.

LaVerne Y. Stringfield,

Director, Office of Federal Advisory Committee Policy.

[FR Doc. 02–2386 Filed 1–31–02; 8:45 am]

BILLING CODE 4140–01–M

DEPARTMENT OF THE INTERIOR

Office of the Secretary

Bureau of Indian Affairs

Office of Special Trustee for American Indians

Office of Indian Trust Transition

Tribal Consultation on Indian Trust Asset Management

AGENCIES: Office of the Secretary, Bureau of Indian Affairs, Office of the Special Trustee for American Indians, Office of Indian Trust Transition, Interior.

ACTION: Notice of tribal consultation meeting.

SUMMARY: The Office of the Secretary, along with the Bureau of Indian Affairs, the Office of Special Trustee for American Indians, and the Office of Indian Trust Transition, will conduct an additional meeting to discuss a proposed reorganization of the Department's trust responsibility functions to improve the management of Indian trust assets. Any tribe, band, nation or individual is encouraged to attend this meeting and to submit written comments. This meeting is in addition to those identified in a prior **Federal Register** notice of December 11, 2001 (66 FR 64054).

DATES: The date and city location of the consultation meeting is as follows:

- February 14, 2002—Portland, Oregon.

ADDRESSES: The address for the consultation meeting, which will begin promptly at 9 a.m., is as follows:

- Sheraton Hotel, 8235 NE Airport Way, Portland, Oregon 97220.

FOR FURTHER INFORMATION CONTACT: Wayne R. Smith, Deputy Assistant Secretary—Indian Affairs, 1849 C Street, NW., MS 4140 MIB, Washington, DC 20240 (202/208–7163).

SUPPLEMENTARY INFORMATION: The purpose of this meeting is to involve affected and interested parties in the process of organizing the Department's trust asset management responsibility functions. The Department has determined that there is a need for dramatic change in the management of

Indian trust assets. This need has been made apparent in several ways. An independent consultant has analyzed important components of the Department's trust reform activities and made several recommendations, including the recommendation that the Department consolidate trust functions under a single entity. Concerns have also been raised in the *Cobell* v. *Norton* case, which is currently pending in the Federal District Court for the District of Columbia. Internal review has also supported reorganization. Additionally, a recent report commissioned by the Department of the Interior has supported reorganization. A new office in the Department, the Office of Indian Trust Transition, has been created to plan and support reorganization. While preliminary actions have been taken by the Department, the plan for reorganization is still in the early stages of development.

Written comments may be submitted at the meeting location or may be mailed to the address indicated under the heading **FOR FURTHER INFORMATION CONTACT.** Interested persons may examine written comments during regular business hours (7:45 a.m. to 4:15 p.m. EST) as arranged by the Assistant Secretary—Indian Affairs, Washington, DC, Monday through Friday, except for Federal holidays. Commenters who wish to remain anonymous must clearly state this preference at the beginning of their written comments. The Department will honor requests for anonymity to the extent allowable by law.

This meeting supports administrative policy on tribal consultation by encouraging maximum direct participation of representatives of tribal governments, tribal organizations and other interested persons in important Departmental processes.

Dated: January 25, 2002.

J. Steven Griles,

Deputy Secretary.

[FR Doc. 02–2303 Filed 1–30–02; 8:45 am]

BILLING CODE 4310–02–M

DEPARTMENT OF THE INTERIOR

Minerals Management Service

Agency Information Collection Activities: Submitted for Office of Management and Budget (OMB) Review; Comment Request

AGENCY: Minerals Management Service (MMS), Interior.

ACTION: Notice of a revision of a currently approved information collection (OMB Control Number 1010–0095).

SUMMARY: To comply with the Paperwork Reduction Act (PRA) of 1995, we are submitting to OMB for review and approval an information collection request (ICR) titled ''Request to Exceed Regulatory Allowance Limitation.'' We are also soliciting comments from the public on this ICR.

DATES: Submit written comments on or before March 4, 2002.

ADDRESSES: Submit written comments to the Office of Information and Regulatory Affairs, OMB, Attention: Desk Officer for the Department of the Interior (OMB Control Number 1010–0095), 725 17th Street, NW, Washington, DC 20503. Also, submit copies of your written comments to Carol Shelby, Regulatory Specialist, Minerals Management Service, MS 320B2, P.O. Box 25165, Denver, Colorado 80225. If you use an overnight courier service, MMS's courier address is Building 85, Room A–614, Denver Federal Center, Denver, Colorado 80225.

FOR FURTHER INFORMATION CONTACT: Carol Shelby, Regulatory Specialist, phone (303) 231–3151 or FAX (303) 231–3385.

SUPPLEMENTARY INFORMATION:

Title: Request to Exceed Regulatory Allowance Limitation.

OMB Control Number: 1010–0095.

Bureau Form Number: Form MMS–4393.

Abstract: The Department of the Interior (DOI) is responsible for matters relevant to mineral resource development on Federal and Indian lands and the Outer Continental Shelf (OCS). The Secretary of the Interior (Secretary) is responsible for managing the production of minerals from Federal and Indian lands and the OCS, collecting royalties from lessees who produce minerals, and distributing the funds collected in accordance with applicable laws. The Secretary also has an Indian trust responsibility to manage Indian lands and seek advice and information from Indian beneficiaries. MMS performs the royalty management functions for the Secretary.

Under certain circumstances, lessees are authorized to deduct from royalty payments the reasonable actual costs of transporting the royalty portion of produced oil and gas from the lease to a processing or sales point not in the immediate lease area. When gas is processed for the recovery of gas plant products, lessees may claim a processing allowance. Transportation and processing allowances are a part of the product valuation process that MMS uses to determine if the lessee is reporting and paying the proper royalty amount.

Regulations at 30 CFR 206.54(b)(1), 206.109(c)(1), 206.156(c)(1), and 206.177(c)(1) establish the limit on transportation allowance deductions for oil and gas at 50 percent of the value of the oil or gas at the point of sale. Regulations at 30 CFR 206.54(b)(2), 206.109(c)(2), 206.156(c)(3), and 206.177(c)(2)–(3) provide that MMS may approve a transportation allowance in excess of 50 percent upon proper application from the royalty payor.

Similar regulations at 30 CFR 206.158(c)(2) establish 66⅔ percent of the value of each gas plant product as the limit on the allowable gas processing deduction. Regulations at 30 CFR 206.158(c)(3) provide for the approval of a gas processing allowance in excess of 66⅔ percent when properly requested by a Federal gas royalty payor. Effective January 2000, Indian gas regulations do not contain any provisions to exceed the 66⅔ percent processing allowance limit.

To request permission to exceed an allowance limit, royalty payors must write a letter to MMS providing the reasons why a higher allowance limit is necessary. MMS developed Form MMS–4393 to be included with the payor's request because in previous unstructured requests some necessary information was frequently omitted.

MMS is seeking approval to revise Form MMS–4393. These revisions are necessary to make Form MMS–4393 compatible with other recently revised forms such as the Form MMS–2014, Report of Sales and Royalty Remittance (OMB control number 1010–0140). These revisions are the result of a major reengineering of MMS's financial and compliance processes and the procurement of a new computer system. For example, during the reengineering process, MMS decided to eliminate the reporting of an accounting identification (AID) number and selling arrangement number on all existing forms. In their place, MMS is requiring a combination of lease and agreement numbers and sales type codes. Since the existing Form MMS–4393 contains columns for AID and selling arrangement numbers, these columns must be removed and new columns for lease and agreement numbers must be added. The revised form requires similar types of information to be provided by the payor so we do not anticipate any changes in burden hours. The revised form will become effective and replace the existing form when our new financial and compliance system is fully operational.

Responses to this information collection are required to obtain or retain a benefit. Proprietary information is requested and protected, and there are no questions of a sensitive nature involved in this collection of information.

Frequency: Annually.

Estimated Number and Description of Respondents: 75 royalty payors.

Estimated Annual Reporting and Recordkeeping ''Hour'' Burden:

37 hours. See the following chart for a breakdown of the burden estimate by CFR section and paragraph.

30 CFR section	Reporting requirement	Burden hours per response	Annual number of responses	Annual burden hours
206.54(b)(2), 206.109(c)(2), 206.156(c)(3), 206.158(c)(3), 206.177(c)(3).	An application for exception (using Form MMS–4393 . . .) shall contain all relevant and supporting documentation necessary for MMS to make a determination.	.5	75	37

Estimated Annual Reporting and Recordkeeping ''Non-hour'' Burden: We have identified no ''non-hour cost'' burden.

Comments: Section 3506(c)(2)(A) of the PRA (44 U.S.C. 3501, *et seq.*) requires each agency ''* * * to provide notice * * * and otherwise consult with members of the public and affected agencies concerning each proposed collection of information * * *.'' Agencies must specifically solicit comments to (a) evaluate whether the proposed collection of information is necessary for the agency to perform its duties, including whether the information is useful; (b) evaluate the accuracy of the agency's estimate of the burden of the proposed collection of information; (c) enhance the quality, usefulness, and clarity of the information to be collected; and (d) minimize the burden on the respondents, including the use of automated collection techniques or other forms of information technology.

To comply with the public consultation process, on August 15, 2001, we published a **Federal Register** notice (66 FR 42875) with the required 60-day comment period announcing that we would submit this ICR to OMB for approval. We received comments from one company. We responded to the comments in our ICR submission for OMB approval. We will provide a copy of the ICR to you without charge upon request.

If you wish to comment in response to this notice, please send your comments directly to the offices listed under the **ADDRESSES** section of this notice. OMB has up to 60 days to approve or disapprove the information collection but may respond after 30 days. Therefore, to ensure maximum consideration, OMB should receive your comments by March 4, 2002. The PRA provides that an agency may not conduct or sponsor, and a person is not required to respond to, a collection of information unless it displays a currently valid OMB control number.

Public Comment Policy: We will make copies of these comments, including names and home addresses of respondents, available for public review during regular business hours at our offices in Lakewood, Colorado.

Individual respondents may request that we withhold their home address from the record, which we will honor to the extent allowable by law. There may be circumstances in which we would withhold from the record a respondent's identity, as allowable by the law. If you wish us to withhold your name and/or address, you must state this prominently at the beginning of your comments. However, we will not consider anonymous comments. We will make all submissions from organizations or businesses, and from individuals identifying themselves as representatives or officials of organizations or businesses, available for public inspection in their entirety.

MMS Information Collection Clearance Officer: Jo Ann Lauterbach, telephone (202) 208–7744

Dated: January 15, 2002.

Milton K. Dial,

Acting Associate Director for Minerals Revenue Management.

[FR Doc. 02–2270 Filed 1–30–02; 8:45 am]

BILLING CODE 4310–MR–P

DEPARTMENT OF THE INTERIOR

National Park Service

Record of Decision/Statement of Findings: Issuance of Permits, Which Would Allow for Safety Improvements at the Provincetown Municipal Airport, Provincetown, MA

ACTION: Notice of approval of Record of Decision.

SUMMARY: Pursuant to subsection 102(2) of the National Environmental Policy Act of 1969, and the regulations promulgated by the Council on Environmental Quality (40 CFR 1505.2), the National Park Service, U.S. Department of the Interior has prepared a Record of Decision and Statement of Findings for Executive Orders 11988 (''Floodplain Management'') and 11990 (''Protection of Wetlands'').

DATES: The Record of Decision was recommended by the Superintendent of Cape Cod National Seashore, and approved by the Director of the Northeast Region on November 28, 2001. The Statement of Findings was also recommended by the Superintendent of Cape Cod National Seashore, certified for technical adequacy and servicewide consistency by both the Chief of the Water Resources Division and the Northeast Region Compliance Officer and approved by the Director of the Northeast Region on November 28, 2001.

ADDRESSES: Inquires regarding the Record of Decision or the Statement of Findings should be submitted to the Superintendent, Cape Cod National Seashore, 99 Marconi Site Road, Wellfleet, Massachusetts 02667. Telephone (508) 349–3785 or e-mail to *CACO_Superintendent@NPS.Gov.*

SUPPLEMENTARY INFORMATION: The summary of the Record of Decision/Statement of Findings follows:

The Department of the Interior, National Park Service (NPS) has prepared this Record of Decision (ROD)/Statement of Findings (SOF) concerning the issuance of special use permits, which would allow for safety improvements at the Provincetown Municipal Airport, Provincetown, Massachusetts. This ROD/SOF responds to and references the Final Environmental Impact Statement (FEIS), of April 7, 2000, for the Provincetown Municipal Airport, Provincetown, Massachusetts, and Department of Transportation Section 4(F) Statement as prepared by the Federal Aviation Administration (FAA). This ROD provides a statement of the decision made; a summary description of the alternatives analyzed by FAA in their

FEIS; the decision rationale; identification of the environmentally preferable alternative; a description of mitigation measures; and a discussion of impairment.

The U.S. Department of the Interior owns the land under the airport. Two twenty-year Special Use Permits have been issued and/or updated to the Town of Provincetown, as of 6/01/98 and 6/19/98, to operate a municipal airport within a prescribed permit area boundary indicated in the NPS permit(s) for aviation operations. One covers the runway area and operational facilities and the other relates to navigational lighting and instrumentation facilities. Section 4(f) of the Department of Transportation Act of 1966 (recodified at 49 U.S.C. 303) requires ''that the Secretary shall not approve any program or project which requires the use of any public park, recreation area, or wildlife and waterfowl refuge of national, state, or local significance as determined by the officials having jurisdiction thereof unless there is no feasible and prudent alternative to the use of such land and such program or project includes all possible planning to minimize harm resulting from the use.'' The pending issuance of permits covered by this ROD for safety improvements necessitated an impact analysis of 4(f) land, as parkland beyond that currently permitted for the various airport purposes was requested by FAA. A Statement of Findings on wetland protection was also prepared to address wetland and floodplain impacts.

The FEIS for the Provincetown Municipal Airport was prepared by the FAA to cover their actions related to implementing the airport Master Plan. The NPS cooperated in the development of the FEIS by providing technical input and review/commentary on impact analysis. The Airport Master Plan is basic to FAA's procedures to develop an Airport Layout Plan that guides physical airport development and improvement such as alterations to runway safety areas, the apron area, and replacement of an approach light system.

A runway extension was evaluated in the FEIS on the basis of current development interests and currently feasible alternative considerations; however, funding for the project is not being approved at this time and further evaluation of this action will be pursued according to conditions outlined in a General Agreement prepared by the FAA and NPS, the essential text of which is presented in the FEIS. The inclusion of the runway extension in the FEIS and the Airport Layout Plan was for planning consideration only. Basically, the agreement between NPS and FAA states that when the FAA detects a need to further consider runway extension, the FAA will fully document the need and initiate re-evaluation of the several factors that affect the Federal decision making process for identifying and selecting the runway extension alternatives and the adequacy of the FAA ROD, by way of an Environmental Assessment (EA). Section 4(f) and Executive Order 11990 compliance for runway extension will be duly accomplished at that time. NPS decision-making on the runway extension is also deferred to that time.

Decision (Selected Action)

The National Park Service will adjust the parkland area permitted for airport use based only on the proposed actions related to the Runway Safety Area, parking aprons, and lighting system as described for safety improvements in the FEIS for the Provincetown Municipal Airport issued in April 2000 and the FAA's ROD, signed November 21, 2000. This will involve exchange and re-designation of the airport land use footprint, by returning two acres of previously permitted land, back to parkland use, and permitting 0.96 acres (incorrectly described in the FAA FEIS and FAA ROD as 0.69 acres) of parklands needed to serve navigational localizer relocation and its associated critical area use. The two acres of previously permitted parklands are being relinquished by FAA to revert to parkland uses, in compensation for the new acreage provided for the localizer. These two acres are located in a surficially undisturbed dune area which possess greater ecological value than the portion of land being exchanged, located between the eastern end of the runway and Race Point Road.

Dated: November 28, 2001.

Marie Rust,

Northeast Regional Director, National Park Service.

[FR Doc. 02–2286 Filed 1–30–02; 8:45 am]

BILLING CODE 4310–76–P

DEPARTMENT OF THE INTERIOR

National Park Service

Notice of Intent; Fire Management Plan, Environmental Impact Statement, Chiricahua National Monument, Arizona

AGENCY: National Park Service, Department of the Interior.

ACTION: Notice of intent to prepare an environmental impact statement for the Fire Management Plan for Chiricahua National Monument.

SUMMARY: Under the provisions of the National Environmental Policy Act of 1969, the National Park Service is preparing an environmental impact statement for the Fire Management Plan for Chiricahua National Monument. This effort will result in a new wildland fire management plan that meets current policies, provides a framework for making fire-related decisions, and serves as an operational manual. Development of a new fire plan is compatible with the broader goals and objectives derived from the park purpose that governs resources management. Alternatives are based on internal scoping done by National Park Service staff on October 17 and 18, 2001. Besides the No-action alternative, preliminary alternatives include the proposed Corridor Plan alternative and Landscape Plan alternative. The No-action alternative maintains the current 1992 fire management plan strategy of suppression, prescribed natural fire, and prescribed burning. The proposed alternative Corridor Plan alternative would allow natural fires and prescribed fires that meet management objectives except in the narrow corridor of developments. This area of the park would be subject to suppression and selective prescribed burning and mechanical thinning to reduce fuel hazards. The Landscape Plan alternative would call for the National Park Service and adjacent US Forest Service to jointly formulate a fire management plan that covers the entire landscape of the Chiricahua Mountains or a more naturally-bound portion of the range.

Major issues are environmental effects of the FMP that are potential problems and include reduction of plant and wildlife populations, disturbance of unique sites, increased erosion or debris flow, increased air pollution, hazards to life and property, visitor inconvenience, reduced tourism, and damage to cultural resources

A scoping brochure has been prepared describing the issues identified to date. Copies of the brochures may be obtained from Superintendent, Chiricahua National Monument, 13063 E. Bonita Canyon Road, Willcox, AZ 85643–9737. The scoping period will be 30 days from the date this notice is published in the **Federal Register**.

Comments

If you wish to comment on the scoping brochure, you may submit your comments by any one of several methods. You may mail comments to Superintendent, Chiricahua National

Monument, 13063 E. Bonita Canyon Road, Willcox, AZ 85643–9737. You may also comment via the Internet to CHIR_Superintendent@nps.gov. Please submit Internet comments as an ASCII file avoiding the use of special characters and any form of encryption. Please also include ''Attn: Chiricahua Fire Management Plan'' and your name and return address in your Internet message. If you do not receive a confirmation from the system that we have received your Internet message, contact us directly at Resources Management 520–824–3560 x120. Finally, you may hand-deliver comments to the above address or at the two public meetings that will be held in Portal, Arizona, and a location near the monument. Notification of the public meetings will be given in a brochure describing the fire planning process, which will be mailed to the addresses generated for the monument's recently approved general management plan. The brochure will be mailed once we are notified of the date that this Notice of Intent is published in the **Federal Register**. If you are not on the monument's mailing list and would like a copy of the brochure, please contact the Superintendent.

Our practice is to make comments, including names and home addresses of respondents, available for public review during regular business hours. Individual respondents may request that we withhold their home address from the record, which we will honor to the extent allowable by law. There also may be circumstances in which we would withhold from the record a respondent's identity, as allowable by law. If you wish us to withhold your name and/or address, you must state this prominently at the beginning of your comment. We will make all submissions from organizations or businesses, and from individuals identifying themselves as representatives or officials of organizations or businesses, available for public inspection in their entirety.

FOR FURTHER INFORMATION CONTACT: Superintendent, Chiricahua National Monument, 520–824–3560 x105.

Dated: December 20, 2001.

Michael D. Snyder,

Acting Director, Intermountain Region, National Park Service.

[FR Doc. 02–2308 Filed 1–30–02; 8:45 am]

BILLING CODE 4310–70–P

DEPARTMENT OF THE INTERIOR

National Park Service

Notice of Intent To Prepare an Environmental Impact Statement for the Schuylkill River Valley National Heritage, Management Plan Update

AGENCY: National Park Service, Department of the Interior.

ACTION: Notice of intent to prepare an Environmental Impact Statement for the Schuylkill River Valley National Heritage Management Plan Update.

SUMMARY: Under the provisions of the National Environmental Policy Act of 1969, the National Park Service is preparing an environmental impact statement (EIS) for the Management Plan for the Schuylkill River Valley National Heritage Area. The Schuylkill River Valley National Heritage Act of 2000 requires the Schuylkill River Greenway Association, with guidance from the National Park Service, to prepare an update of their 1995 Schuylkill Heritage Corridor Management Action Plan. The Management Plan Update is expected to include: (A) actions to be undertaken by units of government and private organizations to protect the resources of the Heritage Area; (B) an inventory of the resources contained in the Heritage Area, including an list of any property in the Heritage Area that is related to the themes of the Heritage Area and that should be preserved, restored, managed, developed, or maintained because of its natural, cultural, historical, recreational, or scenic significance; (C) a recommendation of policies for resource management that considers and details application of appropriate land and water management techniques, including the development of intergovernmental cooperative agreements to protect the historical, cultural, recreational, and natural resources of the Heritage Area in a manner consistent with supporting appropriate and compatible economic viability; (D) a program for implementation of the management plan by the management entity; (E) an analysis of ways in which local, State, and Federal programs may best be coordinated to promote the purposes of this title; and (F) an interpretation plan for the Heritage Area.

The study area, designated as the Schuylkill River Valley National Heritage, includes parts of the counties of: Schuykill, Berks, Chester, Montgomery and Philadelphia in southeastern Pennsylvania as associated with the Schuylkill River corridor.

The National Park Service (NPS) maintains two parks sites within the region: Valley Forge National Historical Park and the Hopewell Furnace National Historic Site. Otherwise the majority of land is non-federal and the NPS assumes a management role only within their park units. Instead, conservation, interpretation and other activities are managed by partnerships among federal, state, and local governments and private nonprofit organizations. The Schuylkill River Greenway Association manages the national heritage area. The National Park Service has been authorized by Congress to provide technical and financial assistance for a limited period (up to 10 years from the time of the designation in 2000).

The EIS will address a range of alternatives—they include a no-action alternative and other action alternatives. The impacts of the alternatives will be assessed through the EIS process.

A scoping meeting will be scheduled and notice will be made of the meeting through a broad public mailing and publication in the local newspapers.

FOR FURTHER INFORMATION CONTACT: Peter Samuel, Project Leader, Philadelphia Support Office, National Park Service, US Custom House, 200 Chestnut Street, Philadelphia, PA 19106, *peter_samuel@nps.gov*, 215–597–1848.

If you correspond using the internet, please include your name and return address in your e-mail message. Our practice is to make comments, including names and home addresses of respondents, available for public review. Individual respondents may request that we withhold their home address from the record, which we will honor or the extent allowable by law. There also may be circumstances in which we would withhold from the record a respondent's identify, as allowable by law. If you wish us to withhold your name and/or address, you must state this prominently at the beginning of your comment. However, we will not consider anonymous comments. We will make all submissions from organizations or businesses, and from individuals identifying themselves as representatives or officials or organizations or businesses, available for public inspection in their entirety.

Dated: December 18, 2001.

Dale Ditmanson,

Associate Regional Director, Park Operations and Education, Northeast Region.

[FR Doc. 02–2306 Filed 1–30–02; 8:45 am]

BILLING CODE 4310–70–M

DEPARTMENT OF THE INTERIOR

National Park Service

Golden Gate National Recreational Area and Point Reyes National Seashore Advisory Commission; Notice of Meeting Cancellation

Notice is hereby given in accordance with the Federal Advisory Committee Act that the meeting of the Golden Gate National Recreational Area and Point Reyes National Seashore Advisory Commission previously scheduled for Saturday, February 2, 2002 in Point Reyes Station, California will be cancelled.

The Advisory Commission was established by Public Law 92–589 to provide for the free exchange of ideas between the National Park Service and the public and to facilitate the solicitation of advice and other counsel from members of the public on problems pertinent to the National Park Service systems in Marin, San Francisco and San Mateo Counties. Members of the Commission are as follows:

Mr. Richard Bartke, Chairman
Ms. Susan Giacomini Allan
Mr. Michael Alexander
Ms. Lennie Roberts
Mr. Fred Rodriquez
Mr. Redmond Kernan
Mr. Gordon Bennett
Mr. John J. Spring
Mr. Doug Nadeau
Ms. Amy Meyer, Vice Chair
Mr. Douglas Siden
Mr. Dennis J. Rodoni
Ms. Yvonne Lee
Mr. Trent Orr
Ms. Betsey Cutler
Ms. Anna-Marie Booth
Dr. Edgar Wayburn
Mr. Paul Jones

Dated: January 11, 2002.

Don L. Neubacher,

Superintendent, Point Reyes National Seashore.

[FR Doc. 02–2307 Filed 1–30–02; 8:45 am]

BILLING CODE 4310–70–M

DEPARTMENT OF THE INTERIOR

National Park Service

National Register of Historic Places; Notification of Pending Nominations

Nominations for the following properties being considered for listing in the National Register were received by the National Park Service before January 19, 2002. Pursuant to § 60.13 of 36 CFR part 60 written comments concerning the significance of these properties under the National Register criteria for evaluation may be forwarded by United States Postal Service, to the National Register of Historic Places, National Park Service, 1849 C St. NW, NC400, Washington, DC 20240; by all other carriers, National Register of Historic Places, National Park Service, 800 N. Capitol St.NW, Suite 400, Washington DC 20002; or by fax, 202–343–1836 . Written or faxed comments should be submitted by February 15, 2002.

Carol D. Shull,

Keeper of the National Register Of Historic Places.

COLORADO

Denver County

Kerr House, 1900 E. 7th Ave. Pkwy, Denver, 02000125

Pueblo County

St. John's Greek Orthodox Church, 1000–1010 Spruce St., Pueblo, 02000123

GEORGIA

Madison County

Paoli Historic District, Jct. of Cty Rd. 334 amd Cty Rd. 331, Paoli, 02000094

Morgan County

Buckhead Historic District, Roughly bounded by Main St. and Parks Mill, Seven Islands and Baldwin Dairy Rds., Buckhead, 02000097

Washington County

Sanderville Commercial and Industrial District, (Georgia County Courthouses TR) Roughly Jernigan, Gilmore, North Smith, East Haynes, W. Haynes, and Warthen Sts., Sandersville, 02000120

ILLINOIS

Adams County

Ursa Town Hall, 109 S. Warsaw St., Ursa, 02000095
Woodland Cemetery, 1020 S. Fifth St., Quincy, 02000096

Coles County

Illinois Central Railroad Depot, 1718 Broadway Ave., Mattoon, 02000098

Cook County

Aquitania, The, 5000 Marine Dr., Chicago, 02000099
Gunderson Historic District, Roughly bounded by Madison St., Harrison St. Gunderson St., and S. Ridgeland Ave., Oak Park, 02000100

LOUISIANA

Natchitoches Parish

Jones, Jerry, House, LA 484, Melrose, 02000124

MARYLAND

Calvert County

JEFFERSONIAN Gunboats NUMBER 137 and NUMBER 138 (Shipwreck), Address Restricted, St. Leonard, 02000122

MISSOURI

Maries County

Maries County Jail and Sheriff's House, Jct. of Fifth and Mill Sts., Vienna, 02000101

Osage County

Zewicki, Dr. Enoch T. and Amy, House, 402 E. Main St., Linn, 02000121

St. Louis Independent City

Delany Building, 1000–06 Loust St., St. Louis (Independent City), 02000102

MONTANA

Madison County

Byam, Dr. Don L., House, Main St., Nevada City, 02000103
Finney House, Jct. of Main and California Sts., Nevada City, 02000104

Yellowstone County

Electric Building, 113–115 Broadway, Billings, 02000105

NEVADA

Clark County

Sloan Petroglyph Site (Boundary Increase), Address Restricted, Las Vegas, 02000114

NEW JERSEY

Atlantic County

Doughty, John, House, 40 North Shore Rd., Absecon City, 02000107

Middlesex County

Roosevelt Hospital, 1 Roosevelt Dr., Edison, 02000109

Morris County

United States Army Steam Locomotice No. 4039, 1 Railroad Plaza, 10 West and Whippany Rd., Hanover Township, 02000108

Union County

Grace Episcopal Church, 600 Cleveland Ave., Plainfield City, 02000106

NORTH CAROLINA

Burke County

Sloan—Throneburg Farm, NC 1429, 0.3 mi. W of jct. with NC 1450, Chesterfield, 02000110

Lee County

Farish—Lambeth House, (Lee County MPS) 6308 Deep River Rd., Sanford, 02000111

Mitchell County

Gunter Building, 288 Oak Ave., Spruce Pine, 02000112

Surry County

Hauser Farm, 308 Horne Creek Farm Rd., Pinnacle, 02000113

SOUTH CAROLINA

Greenwood County

Old Greenwood Cemetery, 503 E. Cambridge Ave., Greenwood, 02000115

TEXAS

Brazos County

Bryan Municipal Building, (Bryan MRA) 111 E. 27th St., Bryan, 02000116

Harris County

Boulevard Oaks Historic District, Roughly bounded by North Blvd., South Blvd., Hazard and Mandell Sts., Houston, 02000117

VERMONT

Franklin County

Swanton School, (Educational Resources of Vermont MPS) 53 Church St., Swanton, 02000118

Windsor County

Atherton Farmstead, 31 Greenbush Rd., Cavendish, 02000119

A request for REMOVAL has been made for the following resources:

SOUTH DAKOTA

Jones County

Van Metre Bridge (Historic Bridges in South Dakota MPS) Local Rd. over the Bad R. Murdo vicinity, 93001296

WISCONSIN

Waukesha County

Waukesha County Airport Hangar 24151 W. Bluemound Rd., Waukesha, 98001596

[FR Doc. 02–2287 Filed 1–30–02; 8:45 am]

BILLING CODE 4310–70–P

DEPARTMENT OF THE INTERIOR

National Park Service

Notice of Inventory Completion for Native American Human Remains and Associated Funerary Objects in the Possession of the University of Denver Department of Anthropology and Museum of Anthropology, Denver, CO

AGENCY: National Park Service, Interior.

ACTION: Notice.

Notice is hereby given in accordance with provisions of the Native American Graves Protection and Repatriation Act (NAGPRA), 43 CFR 10.9, of the completion of an inventory of human remains and associated funerary objects in the possession of the University of Denver Department of Anthropology and Museum of Anthropology, Denver, CO.

This notice is published as part of the National Park Service's administrative responsibilities under NAGPRA, 43 CFR 10.2 (c). The determinations within this notice are the sole responsibility of the museum, institution, or Federal agency that has control of these Native American human remains and associated funerary objects. The National Park Service is not responsible for the determinations within this notice.

A detailed assessment of the human remains was made by University of Denver Department of Anthropology and Museum of Anthropology professional staff and a contract physical anthropologist in consultation with representatives of the Big Pine Band of Owens Valley Paiute Shoshone Indians of the Big Pine Reservation, California; Death Valley Timbi-Sha Shoshone Band of California; Duckwater Shoshone Tribe of the Duckwater Reservation, Nevada; Ely Shoshone Tribe of Nevada; Fort McDermitt Paiute and Shoshone Tribes of the Fort McDermitt Indian Reservation, Nevada and Oregon; Northwestern Band of Shoshoni Nation of Utah (Washakie); Paiute-Shoshone Indians of the Bishop Community of the Bishop Colony, California; Paiute-Shoshone Indians of the Lone Pine Community of the Lone Pine Reservation, California; Paiute-Shoshone Tribe of the Fallon Reservation and Colony, Nevada; Shoshone Tribe of the Wind River Reservation, Wyoming; Shoshone-Bannock Tribes of the Fort Hall Reservation of Idaho; Shoshone-Paiute Tribes of the Duck Valley Reservation, Nevada; Te-Moak Tribes of Western Shoshone Indians of Nevada (four constituent bands: Battle Mountain Band, Elko Band, South Fork Band, and Wells Band); and the Yomba Shoshone Tribe of the Yomba Reservation, Nevada.

Around 1940, human remains representing two individuals were collected from the area of Big Sandy, Sublette County, WY, by Scott Peterson (Crow) and Alice Peterson (Shoshone). At an unknown date, the Petersons gave the remains to Theodore Sowers. Mr. Sowers was a graduate of the University of Denver and, in 1995, his daughters donated the remains to the University of Denver so that they could be repatriated. No known individuals were identified. No associated funerary objects are present.

The statements of the collectors and the donor indicate that these remains are Native American, which are supported by the osteological and geographical evidence. Linguistic and ethnographic evidence indicates that the ancestors of the Eastern Shoshone arrived in the Wind River region by A.D. 1000, and perhaps much earlier. The condition of the remains suggests that they are probably younger than 1000 years old. The Eastern Shoshone are currently represented by the Big Pine Band of Owens Valley Paiute Shoshone Indians of the Big Pine Reservation, California; Death Valley Timbi-Sha Shoshone Band of California; Duckwater Shoshone Tribe of the Duckwater Reservation, Nevada; Ely Shoshone Tribe of Nevada; Fort McDermitt Paiute and Shoshone Tribes of the Fort McDermitt Indian Reservation, Nevada and Oregon; Northwestern Band of Shoshoni Nation of Utah (Washakie); Paiute-Shoshone Indians of the Bishop Community of the Bishop Colony, California; Paiute-Shoshone Indians of the Lone Pine Community of the Lone Pine Reservation, California; Paiute-Shoshone Tribe of the Fallon Reservation and Colony, Nevada; Shoshone Tribe of the Wind River Reservation, Wyoming; Shoshone-Bannock Tribes of the Fort Hall Reservation of Idaho; Shoshone-Paiute Tribes of the Duck Valley Reservation, Nevada; Te-Moak Tribes of Western Shoshone Indians of Nevada (four constituent bands: Battle Mountain Band, Elko Band, South Fork Band, and Wells Band); and the Yomba Shoshone Tribe of the Yomba Reservation, Nevada.

Based on the above-mentioned information, officials of the University of Denver Department of Anthropology and Museum of Anthropology have determined that, pursuant to 43 CFR 10.2 (d)(1), the human remains listed above represent the physical remains of two individuals of Native American ancestry. Also, officials of the University of Denver Department of Anthropology and Museum of Anthropology have determined that, pursuant to 43 CFR 10.2 (e), there is a relationship of shared group identity that can be reasonably traced between these Native American human remains and the Big Pine Band of Owens Valley Paiute Shoshone Indians of the Big Pine Reservation, California; Death Valley Timbi-Sha Shoshone Band of California; Duckwater Shoshone Tribe of the Duckwater Reservation, Nevada; Ely Shoshone Tribe of Nevada; Fort McDermitt Paiute and Shoshone Tribes of the Fort McDermitt Indian Reservation, Nevada and Oregon; Northwestern Band of Shoshoni Nation of Utah (Washakie); Paiute-Shoshone Indians of the Bishop Community of the Bishop Colony, California; Paiute-Shoshone Indians of the Lone Pine Community of the Lone Pine Reservation, California; Paiute-Shoshone Tribe of the Fallon Reservation and Colony, Nevada; Shoshone Tribe of the Wind River Reservation, Wyoming; Shoshone-Bannock Tribes of the Fort Hall Reservation of Idaho; Shoshone-Paiute Tribes of the Duck Valley Reservation, Nevada; Te-Moak Tribes of Western

Shoshone Indians of Nevada (four constituent bands: Battle Mountain Band, Elko Band, South Fork Band, and Wells Band); and the Yomba Shoshone Tribe of the Yomba Reservation, Nevada.

This notice has been sent to officials of the Big Pine Band of Owens Valley Paiute Shoshone Indians of the Big Pine Reservation, California; Death Valley Timbi-Sha Shoshone Band of California; Duckwater Shoshone Tribe of the Duckwater Reservation, Nevada; Ely Shoshone Tribe of Nevada; Fort McDermitt Paiute and Shoshone Tribes of the Fort McDermitt Indian Reservation, Nevada and Oregon; Northwestern Band of Shoshoni Nation of Utah (Washakie); Paiute-Shoshone Indians of the Bishop Community of the Bishop Colony, California; Paiute-Shoshone Indians of the Lone Pine Community of the Lone Pine Reservation, California; Paiute-Shoshone Tribe of the Fallon Reservation and Colony, Nevada; Shoshone Tribe of the Wind River Reservation, Wyoming; Shoshone-Bannock Tribes of the Fort Hall Reservation of Idaho; Shoshone-Paiute Tribes of the Duck Valley Reservation, Nevada; Te-Moak Tribes of Western Shoshone Indians of Nevada (four constituent bands: Battle Mountain Band, Elko Band, South Fork Band, and Wells Band); and the Yomba Shoshone Tribe of the Yomba Reservation, Nevada. Representatives of any other Indian tribe that believes itself to be culturally affiliated with these human remains should contact Jan I. Bernstein, Collections Manager and NAGPRA Coordinator at the University of Denver Department of Anthropology and Museum of Anthropology, 2000 Asbury, Sturm Hall S-146, Denver, CO 80208-2406, email jbernste@du.edu, telephone (303) 871-2543, before March 4, 2002. Repatriation of the human remains to the Big Pine Band of Owens Valley Paiute Shoshone Indians of the Big Pine Reservation, California; Death Valley Timbi-Sha Shoshone Band of California; Duckwater Shoshone Tribe of the Duckwater Reservation, Nevada; Ely Shoshone Tribe of Nevada; Fort McDermitt Paiute and Shoshone Tribes of the Fort McDermitt Indian Reservation, Nevada and Oregon; Northwestern Band of Shoshoni Nation of Utah (Washakie); Paiute-Shoshone Indians of the Bishop Community of the Bishop Colony, California; Paiute-Shoshone Indians of the Lone Pine Community of the Lone Pine Reservation, California; Paiute-Shoshone Tribe of the Fallon Reservation and Colony, Nevada; Shoshone Tribe of the Wind River Reservation, Wyoming; Shoshone-Bannock Tribes of the Fort Hall Reservation of Idaho; Shoshone-Paiute Tribes of the Duck Valley Reservation, Nevada; Te-Moak Tribes of Western Shoshone Indians of Nevada (four constituent bands: Battle Mountain Band, Elko Band, South Fork Band, and Wells Band); and the Yomba Shoshone Tribe of the Yomba Reservation, Nevada, may begin after that date if no additional claimants come forward.

Dated: January 14, 2002.

Robert Stearns,

Manager, National NAGPRA Program.

[FR Doc. 02–2309 Filed 1–30–02; 8:45 am]

BILLING CODE 4310–70–S

DEPARTMENT OF THE INTERIOR

Bureau of Reclamation

Quarterly Status Report of Water Service, Repayment, and Other Water-Related Contract Negotiations

AGENCY: Bureau of Reclamation, Interior.

ACTION: Notice.

SUMMARY: Notice is hereby given of proposed contractual actions pending through December 31, 2001, and contract actions that have been completed or discontinued since the last publication of this notice on October 25, 2001. From the date of this publication, future quarterly notices during this calendar year will be limited to new, modified, discontinued, or completed contract actions. This annual notice should be used as a point of reference to identify changes in future notices. This notice is one of a variety of means used to inform the public about proposed contractual actions for capital recovery and management of project resources and facilities. Additional Bureau of Reclamation (Reclamation) announcements of individual contract actions may be published in the **Federal Register** and in newspapers of general circulation in the areas determined by Reclamation to be affected by the proposed action. Announcements may be in the form of news releases, legal notices, official letters, memorandums, or other forms of written material. Meetings, workshops, and/or hearings may also be used, as appropriate, to provide local publicity. The public participation procedures do not apply to proposed contracts for sale of surplus or interim irrigation water for a term of 1 year or less. Either of the contracting parties may invite the public to observe contract proceedings. All public participation procedures will be coordinated with those involved in complying with the National Environmental Policy Act.

ADDRESSES: The identity of the approving officer and other information pertaining to a specific contract proposal may be obtained by calling or writing the appropriate regional office at the address and telephone number given for each region in the supplementary information.

FOR FURTHER INFORMATION CONTACT: Sandra L. Simons, Manager, Water Contracts and Repayment Office, Bureau of Reclamation, PO Box 25007, Denver, Colorado 80225–0007; telephone 303–445–2902.

SUPPLEMENTARY INFORMATION: Pursuant to section 226 of the Reclamation Reform Act of 1982 (96 Stat. 1273) and 43 CFR 426.20 of the rules and regulations published in 52 FR 11954, Apr. 13, 1987, Reclamation will publish notice of the proposed or amendatory contract actions for any contract for the delivery of project water for authorized uses in newspapers of general circulation in the affected area at least 60 days prior to contract execution. Pursuant to the ''Final Revised Public Participation Procedures'' for water resource-related contract negotiations, published in 47 FR 7763, Feb. 22, 1982, a tabulation is provided of all proposed contractual actions in each of the five Reclamation regions. Each proposed action is, or is expected to be, in some stage of the contract negotiation process in 2002. When contract negotiations are completed, and prior to execution, each proposed contract form must be approved by the Secretary of the Interior, or pursuant to delegated or redelegated authority, the Commissioner of Reclamation or one of the regional directors. In some instances, congressional review and approval of a report, water rate, or other terms and conditions of the contract may be involved.

Public participation in and receipt of comments on contract proposals will be facilitated by adherence to the following procedures:

1. Only persons authorized to act on behalf of the contracting entities may negotiate the terms and conditions of a specific contract proposal.

2. Advance notice of meetings or hearings will be furnished to those parties that have made a timely written request for such notice to the appropriate regional or project office of Reclamation.

3. Written correspondence regarding proposed contracts may be made available to the general public pursuant

to the terms and procedures of the Freedom of Information Act (80 Stat. 383), as amended.

4. Written comments on a proposed contract or contract action must be submitted to the appropriate regional officials at the locations and within the time limits set forth in the advance public notices.

5. All written comments received and testimony presented at any public hearings will be reviewed and summarized by the appropriate regional office for use by the contract approving authority.

6. Copies of specific proposed contracts may be obtained from the appropriate regional director or his designated public contact as they become available for review and comment.

7. In the event modifications are made in the form of a proposed contract, the appropriate regional director shall determine whether republication of the notice and/or extension of the comment period is necessary.

Factors considered in making such a determination shall include, but are not limited to: (i) the significance of the modification, and (ii) the degree of public interest which has been expressed over the course of the negotiations. As a minimum, the regional director shall furnish revised contracts to all parties who requested the contract in response to the initial public notice.

Acronym Definitions Used Herein

BON Basis of Negotiation
BCP Boulder Canyon Project
Reclamation Bureau of Reclamation
CAP Central Arizona Project
CUP Central Utah Project
CVP Central Valley Project
CRSP Colorado River Storage Project
D&MC Drainage and Minor Construction
FR Federal Register
IDD Irrigation and Drainage District
ID Irrigation District
M&I Municipal and Industrial
NEPA National Environmental Policy Act
O&M Operation and Maintenance
P–SMBP Pick-Sloan Missouri Basin Program
PPR Present Perfected Right
RRA Reclamation Reform Act
R&B Rehabilitation and Betterment
SOD Safety of Dams
SRPA Small Reclamation Projects Act
WCUA Water Conservation and Utilization Act
WD Water District

Pacific Northwest Region: Bureau of Reclamation, 1150 North Curtis Road, Suite 100, Boise, Idaho 83706–1234, telephone 208–378–5223.

1. Irrigation, M&I, and miscellaneous water users; Idaho, Oregon, Washington, Montana, and Wyoming: Temporary or interim water service contracts for irrigation, M&I, or miscellaneous use to provide up to 10,000 acre-feet of water annually for terms up to 5 years; long-term contracts for similar service for up to 1,000 acre-feet of water annually.

2. Rogue River Basin Water Users, Rogue River Basin Project, Oregon: Water service contracts; $8 per acre-foot per annum.

3. Willamette Basin Water Users, Willamette Basin Project, Oregon: Water service contracts; $8 per acre-foot per annum.

4. Pioneer Ditch Company, Boise Project, Idaho; Clark and Edwards Canal and Irrigation Company, Enterprise Canal Company, Ltd., Fremont-Madison ID, Lenroot Canal Company, Liberty Park Canal Company, Parsons Ditch Company, Poplar ID, Wearyrick Ditch Company, all in the Minidoka Project, Idaho; Juniper Flat District Improvement Company, Wapinitia Project, Oregon; and Gem, Ridgeview, and Owyhee IDs, Owyhee Project, Oregon: Amendatory repayment and water service contracts; purpose is to conform to the RRA (Public Law 97–293).

5. Bridgeport ID, Chief Joseph Dam Project, Washington: Warren Act contract for the use of an irrigation outlet in Chief Joseph Dam.

6. Palmer Creek Water District Improvement Company, Willamette Basin Project, Oregon: Irrigation water service contract for approximately 13,000 acre-feet.

7. U. S. Fish and Wildlife Service and Boise-Kuna ID, Boise Project, Idaho: Memorandum of agreement for the use of approximately 400 acre-feet of storage space annually in Anderson Ranch Reservoir. Water to be used for wildlife mitigation purposes (ponds and wetlands).

8. North Unit ID and/or city of Madras, Deschutes Project, Oregon: Long-term municipal water service contract for provision of approximately 125 acre-feet annually from the project water supply to the city of Madras.

9. North Unit ID, Deschutes Project, Oregon: Warren Act contract with cost of service charge to allow for use of project facilities to convey nonproject water.

10. Baker Valley ID, Baker Project, Oregon: Warren Act contract with cost of service charge to allow for use of project facilities to store nonproject water.

11. Trendwest Resorts, Yakima Project, Washington: Long-term water exchange contract for assignment of Teanaway River and Big Creek water rights to Reclamation for instream flow use in exchange for annual use of up to 3,500 acre-feet of water from Cle Elum Reservoir for a proposed resort development.

12. City of Cle Elum, Yakima Project, Washington: Contract for up to 2,170 acre-feet of water for municipal use.

13. Burley ID, Minidoka Project, Idaho-Wyoming: Supplemental and amendatory contract providing for the transfer of O&M of the headworks of the Main South Side Canal and works incidental thereto.

14. Minidoka ID, Minidoka Project, Idaho-Wyoming: Supplemental and amendatory contract providing for the transfer of O&M of the headworks of the Main North Side Canal and works incidental thereto.

15. Fremont-Madison ID, Minidoka Project, Idaho-Wyoming: Repayment contract for reimbursable cost of SOD modifications to Grassy Lake Dam.

16. Twenty-two irrigation districts of the Storage Division, Yakima Project, Washington: Repayment agreements for the reimbursable cost of SOD modifications to Keechelus Dam.

17. Wenatchee Heights Reclamation District, Washington: Deferment contract for the deferment of the District's annual installments due in 2001 and 2002 under a Drought Act loan contract.

18. Individual irrigation water user, Rogue River Basin Project, Oregon: Water service contract to provide 1,029 acre-feet of stored water from Lost Creek Reservoir (a Corps of Engineers' project) for the purpose of irrigation.

19. Roza ID, Yakima Project, Washington: Deferment contract for the deferment of the District's 2001 construction obligation under the Drought Act of 1959.

20. Queener Irrigation Improvement District, Willamette Basin Project, Oregon: Renewal of long-term water service contract to provide up to 2,150 acre-feet of stored water from the Willamette Basin Project (a Corps of Engineers' project) for the purpose of irrigation within the District's service area.

21. Vale and Warm Springs IDs, Vale Project, Oregon: Repayment contract for reimbursable cost of SOD modifications to Warm Springs Dam.

22. Hermiston, Stanfield, and West Extension IDs, Umatilla Project, Oregon: Amendatory repayment contracts for long-term boundary expansions to include lands outside of federally recognized district boundaries.

The following contract action has been completed since the last

publication of this notice on October 25, 2001.

1. (14) Farmer's and Buck and Jones Ditch Associations or the Applegate Irrigation Corporation, Rogue River Basin Project, Oregon: Long-term irrigation water service contract for provision of up to 4,475 acre-feet of stored water from Applegate Reservoir (a Corps of Engineers' project) in exchange for the assignment of Little Applegate River natural flow rights to Reclamation for instream flow use. Contract was executed on October 1, 2001.

Mid-Pacific Region: Bureau of Reclamation, 2800 Cottage Way, Sacramento, California 95825–1898, telephone 916–978–5250.

1. Irrigation water districts, individual irrigators, M&I and miscellaneous water users, Mid-Pacific Region projects other than CVP: Temporary (interim) water service contracts for available project water for irrigation, M&I, or fish and wildlife purposes providing up to 10,000 acre-feet of water annually for terms up to 5 years; temporary Warren Act contracts for use of project facilities for terms up to 1 year; temporary conveyance agreements with the State of California for various purposes; long-term contracts for similar service for up to 1,000 acre-feet annually.

Note: Upon written request, copies of the standard forms of temporary water service contracts for the various types of service are available from the Regional Director at the address shown above.

2. Contractors from the American River Division, Cross Valley Canal, Delta Division, Friant Division, Sacramento River Division, San Felipe Division, Shasta Division, Trinity River Division, and West San Joaquin Division, CVP, California: Early renewal of existing long-term contracts; long-term renewal of the interim renewal water service contracts expiring in 2002; water quantities for these contracts total in excess of 3.4M acre-feet. These contract actions will be accomplished through long-term renewal contracts pursuant to Public Law 102–575. Prior to completion of negotiation of long-term renewal contracts, existing interim renewal water service contracts may be renewed through successive interim renewal of contracts.

3. Redwood Valley County WD, SRPA, California: Restructuring the repayment schedule pursuant to Public Law 100–516.

4. El Dorado County Water Agency, CVP, California: M&I water service contract to supplement existing water supply: 15,000 acre-feet for El Dorado County Water Agency authorized by Public Law 101–514.

5. Sutter Extension and Biggs-West Gridley WDs, Buena Vista Water Storage District, and the State of California Department of Water Resources, CVP, California: Pursuant to Public Law 102–575, conveyance agreements for the purpose of wheeling refuge water supplies and funding District facility improvements and exchange agreements to provide water for refuge and private wetlands.

6. Mountain Gate Community Services District, CVP, California: Amendment of existing long-term water service contract to include right to renew. This amendment will also conform the contract to current Reclamation law, including Public Law 102–575.

7. Cachuma Operation and Maintenance Board, Cachuma Project, California: Repayment contract for SOD work on Bradbury Dam.

8. CVP Service Area, California: Temporary water purchase agreements for acquisition of 20,000 to 200,000 acre-feet of water for fish and wildlife purposes as authorized by the Central Valley Project Improvement Act for terms of up to 3 years.

9. City of Roseville, CVP, California: Execution of long-term Warren Act contract for conveyance of nonproject water provided from the Placer County Water Agency. This contract will allow CVP facilities to be used to deliver nonproject water to the City of Roseville for use within their service area.

10. Sacramento Municipal Utility District, CVP, California: Amendment of existing water service contract to allow for additional points of diversion and assignment of up to 30,000 acre-feet of project water to the Sacramento County Water Agency. The amended contract will conform to current Reclamation law.

11. Mercy Springs WD, CVP, California: Partial assignment of about 7,000 acre-feet of Mercy Springs WD's water service contract to Westlands WD for agricultural use.

12. Cachuma Operations and Maintenance Board, Cachuma Project, California: Temporary interim contract (not to exceed 1 year) to transfer responsibility of certain Cachuma Project facilities to member units.

13. M&T, Inc., Sacramento River Water Rights Contractors, CVP, California: A proposed exchange agreement with M&T, Inc., to take Butte Creek water rights water from the Sacramento River in exchange for CVP water to facilitate habitat restoration.

14. El Dorado ID, CVP, California: Execution of long-term Warren Act contract for conveyance of nonproject water. This contract will allow CVP facilities to be used to deliver nonproject water to the El Dorado ID for use within their service area.

15. Placer County Water Agency, CVP, California: Amendment of existing water service contract to allow for additional points of diversion and adjustment to CVP water quantities. The amended contract will conform to current Reclamation law.

16. Horsefly, Klamath, Langell Valley, and Tulelake IDs, Klamath Project, Oregon: Repayment contract for SOD work on Clear Lake Dam.

17. Casitas Municipal WD, Ventura Project, California: Repayment contract for SOD work on Casistas Dam.

18. Warren Act Contracts, CVP, California: Execution of long-term Warren Act contracts (up to 25 years) with various entities for conveyance of nonproject water in the Delta-Mendota Canal and the Friant Division facilities.

19. Tuolumne Utilities District (formerly Tuolumne Regional WD), CVP, California: Long-term water service contract for up to 9,000 acre-feet from New Melones Reservoir, and possibly long-term contract for storage of nonproject water in New Melones Reservoir.

20. Banta Carbona ID, CVP, California: Long-term Warren Act contract for conveyance of nonproject water in the Delta-Mendota Canal.

21. Plain View WD, CVP, California: Long-term Warren Act contract for conveyance of nonproject water in the Delta-Mendota Canal.

22. City of Redding, CVP, California: Amend water service contract, No. 14–06–200–5272A, for the purpose of renegotiating the provisions of contract Article 15, ''Water Shortage and Apportionment,'' to conform to current CVP M&I water shortage policy.

23. Byron-Bethany ID, CVP, California: Long-term Warren Act contract for conveyance of nonproject water in the Delta-Mendota Canal.

24. Resource Renewal Institute, CVP, California: Proposed water purchase agreement with Resource Renewal Institute for the permanent purchase of water rights on Butte Creek for instream flow purposes.

25. Sacramento Area Flood Control Agency, CVP, California: Execution of a long-term operations agreement for flood control operations of Folsom Dam and Reservoir to allow for recovery of costs associated with operating a variable flood control pool of 400,000 to 670,000 acre-feet of water during the flood control season. This agreement is to conform to Federal law.

26. Lower Tule River, Porterville, and Vandalia IDs; and Pioneer Water Company, Success Project, California:

Repayment contract for the SOD costs assigned to the irrigation purpose of Success Dam.

27. Colusa County WD, CVP, California: Proposed long-term Warren Act contract for conveyance of up to 4,500 acre-feet of ground water through the Tehama-Colusa Canal.

28. Friant Water Users Authority and San Luis and Delta-Mendota Water Authority, CVP, California: Amendments to the Operation, Maintenance, and Replacement and Certain Financial and Administrative Activities' Agreements to implement certain changes to the Direct Funding provisions to comply with applicable Federal law.

29. Madera-Chowchilla Water and Power Authority, CVP, California: Agreement to transfer the operation, maintenance, and replacement and certain financial and administrative activities related to the Madera Canal and associated works.

30. El Dorado ID, CVP, California: Title transfer agreement for conveyance of CVP facilities. This agreement will allow transfer of title for Sly Park Dam, Jenkinson Lake, and appurtenant facilities from the CVP to El Dorado ID.

31. Foresthill Public Utility District, CVP, California: Title transfer agreement for conveyance of CVP facilities. This agreement will allow transfer of title for Sugar Pine Dam and appurtenant facilities from the CVP to Foresthill Public Utility District.

32. Carpinteria WD, Cachuma Project, California: Contract to transfer title of distribution system to the District. Title transfer subject to Congressional ratification.

33. Montecito WD, Cachuma Project, California: Contract to transfer title of distribution system to the District. Title transfer subject to Congressional ratification.

34. City of Vallejo, Solano Project, California: Execution of long-term Warren Act contract for conveyance of nonproject water. This contract will allow Solano Project facilities to be used to deliver nonproject water to the City of Vallejo for use within their service area.

35. Northridge WD, CVP, California: Execution of long-term Warren Act contract for conveyance of nonproject water. This contract will allow CVP facilities to be used to deliver nonproject water to the Northridge WD for use within their service area.

36. Sierra Pacific Power Company, Town of Fernley, State of California, City of Reno, City of Sparks, Washoe County, State of Nevada, Truckee-Carson ID, and any other local interest or Native American Tribal Interest, who may have negotiated rights under Public Law 101–618; Nevada and California: Contract for the storage of non-Federal water in Truckee River reservoirs as authorized by Public Law 101–618 and the Preliminary Settlement Agreement. The contracts shall be consistent with the Truckee River Water Quality Settlement Agreement and the terms and conditions of the proposed Truckee River Operating Agreement.

37. Contra Costa WD, CVP, California: Amend water service contract No. I75r–3401A to extend the date for renegotiation of the provisions of contract Article 12 ''Water Shortage and Apportionment.''

38. Cachuma Operation and Maintenance Board, Cachuma Project, California: Contract to transfer responsibility for O&M and O&M funding of certain Cachuma Project facilities to the member units.

The following contract action has been discontinued since the last publication of this notice on October 25, 2001.

1. (45) Delano-Earlimart, Exeter, Ivanhoe, Lindmore, Lindsay-Strathmore, Madera, Shafter-Wasco, and Stone Corral IDs; South San Joaquin Municipal Utilities District; and Tea Pot Dome WD; Friant Unit, CVP, California: Contract to transfer title of 11 distribution systems to the respective districts. All title transfers subject to Congressional ratification. This item is discontinued because the districts are reviewing the feasibility of the proposal to transfer the distribution systems.

The following contract action has been completed since the last publication of this notice on October 25, 2001.

1. (28) Tehama-Colusa Canal Authority, CVP, California: Amendment of existing long-term O&M agreement to also include the O&M of the Red Bluff Diversion Dam and related facilities and to implement certain changes to the Direct Funding provisions of the O&M Agreement to comply with applicable Federal law. Amendatory contract executed December 13, 2001.

Lower Colorado Region: Bureau of Reclamation, PO Box 61470 (Nevada Highway and Park Street), Boulder City, Nevada 89006–1470, telephone 702–293–8536.

1. Milton and Jean Phillips, Cameron Brothers Construction Co., Ogram Farms, John J. Peach, Sunkist Growers, Inc., BCP, Arizona: Colorado River water delivery contracts, as recommended by the Arizona Department of Water Resources, with agricultural entities located near the Colorado River for up to 3,168 acre-feet per year total.

2. Brooke Water Co., BCP, Arizona: Amend contract for an additional 120 acre-feet per year of Colorado River water for domestic uses as recommended by the Arizona Department of Water Resources.

3. National Park Service for Lake Mead National Recreation Area, Supreme Court Decree in *Arizona* v. *California,* and BCP in Arizona and Nevada: Agreement for delivery of Colorado River water for the National Park Service's Federal Establishment PPR for diversion of 500 acre-feet annually and the National Park Service's Federal Establishment PPR pursuant to Executive Order No. 5125 (April 25, 1930).

4. Miscellaneous PPR entitlement holders, BCP, Arizona and California: New contracts for entitlement to Colorado River water as decreed by the U.S. Supreme Court in *Arizona* v. *California,* as supplemented or amended, and as required by section 5 of the Boulder Canyon Project Act. Miscellaneous PPRs holders are listed in the January 9, 1979, Supreme Court Supplemental Decree in *Arizona* v. *California et al.*

5. Miscellaneous PPR No. 11, BCP, Arizona: Assign a portion of the PPR from Holpal to McNulty et al.

6. Curtis Family Trust et al., BCP, Arizona: Contract for 2,100 acre-feet per year of Colorado River water for irrigation.

7. Beattie Farms SW, BCP, Arizona: Contract for 1,890 acre-feet per year of unused Arizona entitlement of Colorado River water for irrigation.

8. U.S. Fish and Wildlife Service, Lower Colorado River Refuge Complex, BCP, Arizona: Agreement to administer the Colorado River water entitlement for refuge lands located in Arizona to resolve water rights coordination issues and to provide for an additional entitlement for non-consumptive use of flow through water.

9. Maricopa-Stanfield IDD, CAP, Arizona: Amend distribution system repayment contract No. 4–07–30–W0047 to reschedule repayment pursuant to June 28, 1996, agreement.

10. Indian and non-Indian agricultural and M&I water users, CAP, Arizona: New and amendatory contracts for repayment of Federal expenditures for construction of distribution systems.

11. San Tan ID, CAP, Arizona: Amend distribution system repayment contract No. 6–07–30–W0120 to increase the repayment obligation by approximately $168,000.

12. Central Arizona Drainage and ID, CAP, Arizona: Amend distribution system repayment contract No. 4–07–30–W0048 to modify repayment terms

pursuant to final order issued by U.S. Bankruptcy Court, District of Arizona.

13. City of Needles, Lower Colorado Water Supply Project, California: Amend contract No. 2–07–30–W0280 to extend the City's water service subcontracting authority to the Counties of Imperial and Riverside.

14. Imperial ID/Coachella Valley WD and/or The Metropolitan WD of Southern California, BCP, California: Contract to fund the Department of the Interior's expenses to conserve All-American Canal seepage water in accordance with Title II of the San Luis Rey Indian Water Rights Settlement Act dated November 17, 1988.

15. Coachella Valley WD and/or The Metropolitan WD of Southern California, BCP, California: Contract to fund the Department of the Interior's expenses to conserve seepage water from the Coachella Branch of the All-American Canal in accordance with Title II of the San Luis Rey Indian Water Rights Settlement Act, dated November 17, 1988.

16. Salt River Pima-Maricopa Indian Community, CAP, Arizona: O&M contract for its CAP water distribution system.

17. Arizona State Land Department, BCP, Arizona: Colorado River water delivery contract for 1,535 acre-feet per year for domestic use.

18. Miscellaneous PPR No. 38, BCP, California: Assign Schroeder's portion of the PPR to Murphy Broadcasting.

19. Berneil Water Co., CAP, Arizona: Water service contracts associated with partial assignment of water service to the Cave Creek Water Company.

20. Tohono O'odham Nation, CAP, Arizona: Repayment contract for a portion of the construction costs associated with water distribution system for Central Arizona IDD.

21. Tohono O'odham Nation, CAP, Arizona: Contracts for Schuk Toak and San Xavier Districts for repayment of Federal expenditures for construction of distribution systems.

22. Canyon Forest Village II Corporation, BCP, Arizona: Colorado River water delivery contract for up to 400 acre-feet per year of unused Arizona apportionment or surplus apportionment for domestic use.

23. Gila Project Works, Gila Project, Arizona: Title transfer of facilities and certain lands in the Wellton-Mohawk Division from the United States to the Wellton-Mohawk IDD.

24. ASARCO Inc., CAP, Arizona: Amendment of subcontract to extend the deadline until December 31, 2002, for giving notice of termination on exchange.

25. Cyprus Miami Mining Corporation, CAP, Arizona: Amendment of subcontract to extend the deadline until December 31, 2002, for giving notice of termination on exchange.

26. Gila River Indian Community, CAP, Arizona: Amend CAP water delivery contract and distribution system repayment and operation, maintenance, and replacement contract pursuant to anticipated Gila River Indian Community Water Rights Settlement Agreement.

27. California Water Districts, BCP, California: Incorporate into the water delivery contracts with several water districts (Coachella Valley WD, Imperial ID, Palo Verde ID, and The Metropolitan WD of Southern California), through new contracts, contract amendments, contract approvals, or other appropriate means, the agreement to be reached with those water districts to (i) quantify the Colorado River water entitlements for Coachella Valley WD and Imperial ID and (ii) provide a basis for water transfers among California water districts.

28. Coachella Valley WD, BCP, California: Amend contract No. 14–20–650–631 with Coachella Valley WD to include additional lands on the Torres Martinez Indian Reservation that are located within the District's Improvement District No. 1 which were reclassified and determined to be arable.

29. North Gila Valley IDD, Yuma ID, and Yuma Mesa IDD, Yuma Mesa Division, Gila Project, Arizona: Administrative action to amend each district's Colorado River water delivery contract to effectuate a change from a ''pooled'' water entitlement for the Division to a quantified entitlement for each district.

30. Indian and/or non-Indian M&I users, CAP, Arizona: New or amendatory water service contracts or subcontracts in accordance with an anticipated final record of decision for reallocation of CAP water, as discussed in the Secretary of the Interior's notice published on page 41456 of the FR on July 30, 1999.

31. San Carlos Apache Tribe, CAP, Arizona: Agreement among the San Carlos Apache Tribe, the Salt River Project, and the United States, for exchange of up to 14,000 acre-feet of Black River water for CAP water.

32. San Carlos Apache Tribe, Arizona: Agreement among the San Carlos-Apache Tribe, the United States, and the Phelps Dodge Corporation for the lease of CAP water.

33. Arizona Water Banking Authority and Southern Nevada Water Authority, BCP, Arizona and Nevada: Contract to provide for the interstate contractual distribution of Colorado River water through the offstream storage of Colorado River water in Arizona, the development by the Arizona Water Banking Authority of intentionally created unused apportionment, and the release of this intentionally created unused apportionment by the Secretary of the Interior to Southern Nevada Water Authority.

34. Gila River Farms, Arizona: Amendment of SRPA contract to restructure the repayment schedule.

35. Litchfield Park Service Company, CAP, Arizona: Proposed assignments of 5,580 acre-feet of CAP M&I water to the Central Arizona Groundwater Replenishment District and to the cities of Avondale, Carefree, and Goodyear.

36. Shepard Water Company, Inc., Arizona: Contract for the delivery of 50 acre-feet of domestic water.

37. The United States International Boundary and Water Commission, The Metropolitan WD of Southern California, San Diego County Water Authority, and Otay WD, Mexican Treaty Waters: Agreement for the temporary emergency delivery of a portion of the Mexican Treaty waters of the Colorado River to the International Boundary in the vicinity of Tijuana, Baja California, Mexico.

38. Arizona State Land Department, CAP, Arizona: Proposed assignment of 1,000 acre-feet of the Department's CAP M&I water entitlement to the City of Peoria.

39. Gila River Indian Community, Arizona: Operation, maintenance, and replacement contract for an archeological repository named the Huhugam Heritage Center.

40. Sonny Gowan, BCP, California: Approval to lease up to 175 acre-feet of his PPR water to Moabi Regional Park.

41. Jessen Family Limited Partnership, BCP, Arizona: Partial contract assignment of agricultural water from Arlin Dulin to Jessen Family Limited Partnership.

42. Robson Communities, Southern Arizona Water Rights Settlement Act, Arizona: United States contract with Robson Communities for the sale of 1,618 acre-feet of long-term water storage credits accrued in Tucson during calendar year 2000.

43. Cities of Chandler and Mesa, CAP, Arizona: Amendments to the CAP M&I water service subcontracts of the cities of Chandler and Mesa to remove the language stating that direct effluent exchange agreements with Indian Communities are subject to the ''pooling concept.''

44. City of Somerton, BCP, Arizona: Contract for the delivery of up to 750

acre-feet of Colorado River water for domestic use.

45. Various Irrigation Districts, CAP, Arizona: Amend distribution system repayment contracts to provide for partial assumption of debt by the Central Arizona Water Conservation District and the United States upon enactment of Federal legislation providing for resolution of CAP issues.

46. Mohave County Water Authority, BCP, Arizona: Amendatory Colorado River water delivery contract to include the delivery of 3,500 acre-feet per year of fourth priority water and to delete the delivery of 3,500 acre-feet per year of fifth or sixth priority water.

The following contract actions have been discontinued since the last publication of this notice on October 25, 2001.

1. (2) Armon Curtis, Arlin Dulin, Jack Rayner, Glen Curtis, Jamar Produce Corporation, and Ansel T. Hall, BCP, Arizona: Amendatory Colorado River water delivery contracts to exempt each referenced contractor from the acreage limitation and full cost pricing provisions of the RRA.

2. (5) Mohave Valley IDD, BCP, Arizona: Amendment of current contract for additional Colorado River water, change in service area, diversion points, RRA exemption and PPRs.

3. (8) Federal Establishment PPRs entitlement holders, BCP: Individual contracts for administration of Colorado River water entitlement of the Colorado River, Fort Mojave, Quechan, Chemehuevi, and Cocopah Indian Tribes.

4. (9) United States facilities, BCP, California: Reservation of Colorado River water for use at existing Federal facilities and lands administered by Reclamation.

5. (10) Bureau of Land Management, BCP, Arizona: Contract for 1,176 acre-feet per year, for irrigation use, of Arizona's Colorado River water that is not used by higher priority Arizona entitlement holders.

6. (14) Hillander C ID, Colorado River Basin Salinity Control Project, Arizona: Colorado River water delivery contract for 4,500 acre-feet per year.

7. (17) Tohono O'odham Nation, SRPA, Arizona: Repayment contract for a $7.3 million loan for the Schuk Toak District.

8. (36) Agricultural and M&I water users, CAP, Arizona: Water service subcontracts for percentages of available supply reallocated in 1992 for irrigation entities and up to 640,000 acre-feet per year allocated in 1983 for M&I use.

9. (38) Hohokam IDD, CAP, Arizona: Amend water distribution system repayment contract to reflect final project costs.

10. (40) Basic Management, Inc., Salinity Project, Nevada: Title transfer of the Pitman Wash Bypass Demonstration Project Facilities and all interests in acquired lands and easements associated with an obligation to continue bypassing the water in Pitman Wash.

The following contract actions have been completed since the last publication of this notice on October 25, 2001.

1. (25) U.S. Army Proving Ground, BCP, Arizona: Amend agreement to add additional points of diversion for Colorado River water.

2. (58) Golden Shores Water Conservation District, BCP, Arizona: Amendment of water delivery contract to recognize that some private lands outside the district but within its exterior boundaries have been included within the district's boundaries.

Upper Colorado Region: Bureau of Reclamation, 125 South State Street, Room 6107, Salt Lake City, Utah 84138–1102, telephone 801–524–4419.

1. Individual irrigators, M&I, and miscellaneous water users, Initial Units, CRSP; Utah, Wyoming, Colorado, and New Mexico: Temporary (interim) water service contracts for surplus project water for irrigation or M&I use to provide up to 10,000 acre-feet of water annually for terms up to 10 years; long-term contracts for similar service for up to 1,000 acre-feet of water annually.

(a) Harrison F. and Patricia E. Russell: Aspinall Unit, CRSP; Colorado: Contract for 1 acre-foot to support an augmentation plan, Case No. 97CW39, Water Division Court No. 4, State of Colorado, to provide for a single-family residential well, including home lawn and livestock watering (non-commercial).

(b) Walter Daniel Stephens: Aspinall Unit, CRSP; Colorado: Contract for 2 acre-feet to support an augmentation plan, Case No. 97CW49, Water Division Court No. 4, State of Colorado, to provide for pond evaporative depletions during the non-irrigation season.

(c) Larry Allen: Aspinall Unit, CRSP; Colorado: Contract for 1 acre-foot to support an augmentation plan, Case No. 01CW26, Water Division Court No. 4, State of Colorado, to provide for a single-family residential well, including home lawn and livestock watering (non-commercial).

(d) Karl Hipp: Aspinall Unit, CRSP; Colorado: Contract for 1 acre-foot to support an augmentation plan, Case No. 01CW27, Water Division Court No. 4, State of Colorado, to provide for a single-family residential well, including home lawn and livestock watering (non-commercial).

(e) Oliver Woods: Aspinall Unit, CRSP; Colorado: Contract for 1 acre-foot to support an augmentation plan, Case No. 01CW14, Water Division Court No. 4, State of Colorado, to provide for a single-family residential well, including home lawn and livestock watering (non-commercial).

2. Taos Area, San Juan-Chama Project, New Mexico: The Taos area Acequias and the Town and County of Taos are forming a joint powers agreement to form an organization to enter into a repayment contract for up to 2,990 acre-feet of project water to be used for irrigation and M&I in the Taos, New Mexico area.

3. Water Service Contractors, San Juan-Chama Project, New Mexico: Conversion of water service contracts to repayment contracts for the following entities: City of Santa Fe, County of Los Alamos, City of Espanola, Town of Taos, Village of Los Lunas, and Village of Taos Ski Valley.

4. Various Contractors, San Juan-Chama Project, New Mexico: Three potential contracts among the United States, Middle Rio Grande Conservancy District, and the City of Albuquerque to implement terms of Agreed Order Resolving Plaintiff's Motion for Preliminary Injunction, dated August 2, 2000, and the Supplement dated October 5, 2000.

5. Various Contractors, San Juan-Chama Project, New Mexico: The United States proposes to purchase lease water from various contractors to stabilize flows in a critical reach of the Rio Grande in order to meet the needs of irrigators and preserve habitat for the silvery minnow.

6. Provo River Water Users, Provo River Project, Utah: Contract to provide for repayment of reimbursable portion of construction costs of SOD modification to Deer Creek Dam.

7. Upper Gunnison River Water Conservancy District, Wayne N. Aspinall Unit, CRSP, Colorado: A long-term water service contract for up to 25,000 acre-feet for irrigation use.

8. Uncompahgre Valley Water Users Association, Upper Gunnison River Water Conservancy District, and Colorado River Water Conservation District; Uncompahgre Project, Colorado: Water management agreement for water stored at Taylor Park Reservoir and the Wayne N. Aspinall Storage Units to improve water management.

9. Southern Ute Indian Tribe, Florida Project, Colorado: Supplement to contract No. 14–06–400–3038, dated May 7, 1963, for an additional 181 acre-feet of project water, plus 563 acre-feet

of water pursuant to the 1986 Colorado Ute Indian Water Rights Final Settlement Agreement.

10. Grand Valley Water Users Association, Orchard Mesa ID, and Public Service Company of Colorado, Grand Valley Project, Colorado: Water service contract for the utilization of project water for cooling purposes for a steam electric generation plant.

11. Sanpete County Water Conservancy District, Narrows Project, Utah: Application for a SRPA loan and grant to construct a dam, reservoir, and pipeline to annually supply approximately 5,000 acre-feet of water through a transmountain diversion from upper Gooseberry Creek in the Price River drainage (Colorado River Basin) to the San Pitch—Savor River (Great Basin).

12. Individual irrigators, Carlsbad Project, New Mexico: The United States proposes to enter into long-term forbearance lease agreements with individuals who have privately held water rights to divert nonproject water either directly from the Pecos River or from shallow/artesian wells in the Pecos River Watershed. This action will result in additional water in the Pecos River to make up for the water depletions caused by changes in operations at Sumner Dam which were made to improve conditions for a threatened species, the Pecos bluntnose shiner.

13. Dolores Water Conservancy District, Dolores Project, Colorado: Amendment to an existing carriage contract to extend the term of the contract from 25 years to a total of 50 years.

14. Ogden River Water Users Association and Weber Basin Water Conservancy District, Ogden River and Weber Basin Projects, Utah: Contract to provide for repayment of water users portion of construction contract due to SOD investigations recommendations at Pineview Dam.

15. Mancos Water Conservancy District, Mancos Project, Colorado: Various carriage contracts with individual irrigators and the District to allow the carriage of up to 1,000 acre-feet of nonproject irrigation water in project facilities under the authority of Public Law 106–549 for the Mancos Project.

16. San Juan Water Commission, New Mexico, Animas-La Plata Project, Colorado and New Mexico: Cost sharing/repayment contract for up to 20,800 acre-feet per year of M&I water; contract terms to be consistent with the Colorado Ute Settlement Act Amendments of 2000 (Title III of Pub. L. 106–554).

17. La Plata Conservancy District, New Mexico, Animas-La Plata Project, Colorado and New Mexico: Cost-sharing/repayment contract for up to 1,560 acre-feet per year of M&I water; contract terms to be consistent with the Colorado Ute Settlement Act Amendments of 2000 (Title III of Pub. L. 106–554).

The following contract actions have been discontinued since the last publication of this notice on October 25, 2001.

1. (1)(b) City of Page Arizona, Glen Canyon Unit, CRSP, Arizona: Long-term contract for 1,000 acre-feet of water for municipal purposes.

2. (1)(c) LeChee Chapter of the Navajo Nation, Glen Canyon Unit, CRSP, Arizona: Long-term contract for 1,000 acre-feet of water for municipal purposes.

3. (10) Public Service Company of New Mexico, CRSP, Navajo Unit, New Mexico: New water service contract for a depletion of 16,200 acre-feet of project water for cooling purposes for a steam electric generation plant.

4. (21) State of Colorado, Animas-La Plata Project, Colorado and New Mexico: Cost-sharing/repayment contract for up to 10,460 acre-feet per year of M&I water; contract terms to be consistent with the Colorado Ute Settlement Act Amendments of 2000 (Title III of Public Law 106–554).

5. (22) Animas-La Plata Water Conservancy District, Colorado, Animas-La Plata Project, Colorado and New Mexico: Cost-sharing/repayment contract for up to 5,200 acre-feet per year of M&I water; contract terms to be consistent with the Colorado Ute Settlement Act Amendments of 2000 (Title III of Public Law 106–554).

The following contract action has been completed since the last publication of this notice on October 25, 2001.

1. (13) Dolores Water Conservancy District, Dolores Project, Colorado: Carriage contract with the District to carry up to 8,000 acre-feet of nonproject water in project facilities under the authority of the Warren Act of 1911. Contract was executed on October 19, 2001.

Great Plains Region: Bureau of Reclamation, PO Box 36900, Federal Building, 316 North 26th Street, Billings, Montana 59107–6900, telephone 406–247–7730.

1. Individual irrigators, M&I, and miscellaneous water users: Colorado, Kansas, Montana, Nebraska, North Dakota, Oklahoma, South Dakota, Texas, and Wyoming: Temporary (interim) water service contracts for the sale, conveyance, storage, and exchange of surplus project water and nonproject water for irrigation or M&I use to provide up to 10,000 acre-feet of water annually for a term up to 1 year.

2. Green Mountain Reservoir, Colorado-Big Thompson Project, Colorado: Water service contracts for irrigation and M&I; contracts for sale of water from the marketable yield to water users within the Colorado River Basin of western Colorado.

3. Ruedi Reservoir, Fryingpan-Arkansas Project, Colorado: Second round water sales from the regulatory capacity of Ruedi Reservoir. Water service and repayment contracts for up to 17,000 acre-feet annually for M&I use; contract with Colorado Water Conservation Board and the U.S. Fish and Wildlife Service for 10,825 acre-feet for endangered fishes.

4. Garrison Diversion Unit, P–SMBP, North Dakota: Renegotiation of the master repayment contract with Garrison Diversion Conservancy District to conform with the Garrison Diversion Unit Reformulation Act of 1986; negotiation of repayment contracts with irrigators and M&I users.

5. City of Rapid City, Rapid Valley Unit, P–SMBP, South Dakota: Contract renewal for storage capacity in Pactola Reservoir. A temporary (1 year not to exceed 10,000 AF) water service contract will be executed with the City of Rapid City, Rapid Valley Unit, for use of water from Pactola Reservoir. A long-term storage contract is being negotiated for water stored in Pactola Reservoir.

6. Pathfinder ID, North Platte Project, Nebraska: Negotiation of contract regarding SOD program modification of Lake Alice Dam No. 1 Filter/Drain.

7. Mid-Dakota Rural Water System, Inc., South Dakota: Pursuant to the Reclamation Projects Authorization and Adjustment Act of 1992, the Secretary of the Interior is authorized to make grants and loans to Mid-Dakota Rural Water System, Inc., a non-profit corporation for the planning and construction of a rural water supply system.

8. Angostura ID, Angostura Unit, P–SMBP, South Dakota: Another interim 3-year contract was executed on June 9, 2000, to provide for a continuing water supply and allow adequate time for completion of the Environmental Impact Statement for long-term contract renewal. A BON for a long-term contract renewal has been approved by the Commissioner's Office.

9. City of Berthoud, Colorado, Colorado-Big Thompson Project, Colorado: Long-term contract for conveyance of nonproject M&I water through Colorado-Big Thompson Project facilities.

10. Northwest Area Water Supply, North Dakota: Long-term contract for water supply from Garrison Diversion Unit facilities. The BON has been approved by the Commissioner. Negotiations are pending.

11. P–SMBP, Kansas: Existing water service contracts with the Kirwin and Webster IDs in the Solomon River Basin in Kansas were extended for a period of 4 years in accordance with Public Law 104–326. These contracts will be renewed prior to their expiration on December 31, 2003 (Kirwin ID), and December 31, 2005 (Webster ID). Reclamation has prepared a draft environmental assessment (DEA) for the conversion of long-term water service contracts to repayment contracts. On December 10, 2001, the DEA became available for a 30-day review and comment period. Public comments will be accepted until January 9, 2002. Written comments should be directed to Jill Manring, Team Leader, Bureau of Reclamation, PO Box 1607, Grand Island, NE 68802.

12. City of Cheyenne, Kendrick Project, Wyoming: Negotiation of a contract to renew for an additional term of 5 years. Contract for up to 10,000 acre-feet of storage space for replacement water on a yearly basis in Seminoe Reservoir. A temporary contract has been issued pending negotiation of the long-term contract.

13. Highland-Hanover ID, P–SMBP, Hanover-Bluff Unit, Wyoming: Renegotiation of long-term water service contract; includes provisions for repayment of construction costs.

14. Upper Bluff ID, P–SMBP, Hanover-Bluff Unit, Wyoming: Renegotiation of long-term water service contract; includes provisions for repayment of construction cost.

15. Fort Clark ID, P–SMBP, North Dakota: Negotiation of water service contract to continue delivery of project water to the District.

16. Western Heart River ID, P–SMBP, Heart Butte Unit, North Dakota: Negotiation of water service contract to continue delivery of project water to the District.

17. Lower Marias Unit, P–SMBP, Montana: Water service contract expired in July 1998. Initiating long-term contract for the use of up to 600 acre-feet of storage water from Tiber Reservoir to irrigate 220 acres. Temporary/interim contracts are being issued to allow continued delivery of water and the time necessary to complete required actions for the long-term contract process.

18. Lower Marias Unit, P–SMBP, Montana: Initiating renewal of long-term water service contract for the use of up to 750 acre-feet of storage water from Tiber Reservoir to irrigate 250 acres. Temporary/interim contracts are being issued to allow continued delivery of water and the time necessary to complete required actions for the long-term contract process.

19. Lower Marias Unit, P–SMBP, Montana: Water service contract expired May 1998. Initiating long-term contract for the use of up to 6,855 acre-feet of storage water from Tiber Reservoir to irrigate 2,285 acres. Temporary/interim contracts are being issued to allow continued delivery of water and the time necessary to complete required actions for the long-term contract process.

20. Dickinson-Heart River Mutual Aid Corporation, P–SMBP, Dickinson Unit, North Dakota: Negotiate renewal of water service contract for irrigation of lands below Dickinson Dam in western North Dakota.

21. Savage ID, P–SMBP, Montana: The District is currently seeking title transfer. The contract is subject to renewal on an annual basis pending outcome of the title transfer process. Interim contracts are being issued to allow continued delivery of water. The District has requested information concerning renewal of the long-term contract.

22. City of Fort Collins, Colorado-Big Thompson Project, Colorado: Long-term contracts for conveyance and storage of nonproject M&I water through Colorado-Big Thompson Project facilities.

23. Standing Rock Sioux Tribe, P–SMBP, North Dakota: Negotiate a long-term water service contract with the Standing Rock Sioux Tribe in North Dakota for irrigation of up to 2,380 acres of land within the reservation.

24. Glendo Unit, P–SMBP, Wyoming: Contract renewal for long-term water service contracts with Burbank Ditch, New Grattan Ditch Company, Torrington ID, Lucerne Canal and Power Company, and Wright and Murphy Ditch Company.

25. Glendo Unit, P–SMBP, Nebraska: Contract renewal for long-term water service contracts with Bridgeport, Enterprise, and Mitchell IDs, and Central Nebraska Public Power and ID.

26. Belle Fourche ID, Belle Fourche Project, South Dakota: Belle Fourche ID has requested a $25,000 reduction in construction repayment. Negotiations are pending resolution of contract language.

27. Helena Valley Unit, P–SMBP, Montana: Initiating negotiations for renewal of Part A of the A/B contract with Helena Valley ID which expires in 2004.

28. Crow Creek Unit, P–SMBP, Montana: Initiating negotiations for renewal of Part A of the A/B contract with Toston ID which expires in 2004.

29. Louis F. Polk, Jr. (Individual), Shoshone Project, Buffalo Bill Dam, Wyoming: Renewal of exchange water service contract not to exceed 500 acre-feet of water to service 249 acres.

30. Milk River Project, Montana: City of Harlem water service contract expires July of 2002. Initiating negotiation for renewal of a water service contract for an annual supply of raw water for domestic use from the Milk River not to exceed 500 acre-feet. An interim contract may be issued to continue delivery of water until the necessary actions can be completed to renew the long-term contract.

31. Lower Marias Unit, P–SMBP, Montana: City of Chester water service contract expires December of 2002. Initiating negotiation for renewal of a long-term water service contract for an annual supply of raw water for domestic use from Tiber Reservoir not to exceed 500 acre-feet. An interim contract may be issued to continue delivery of water until the necessary actions can be completed to renew the long-term contract.

32. City of Dickinson, P–SMBP, Dickinson Unit, North Dakota: Negotiate a long-term water service contract with the City of Dickinson or Park Board, for minor amounts of water from Dickinson Dam.

33. Clark Canyon Water Supply Company, East Bench Unit, Montana: Initiating renewal of contract No. 14–06–600–3592 which expires December 31, 2005.

34. East Bench ID, East Bench Unit, Montana: Initiating renewal of contract No. 14–06–600–3593 which expires December 31, 2005.

35. Pueblo Board of Water Works, Fryingpan-Arkansas Project, Colorado: Water conveyance contract expires in October of 2002. Initiating negotiation for renewal of a water conveyance contract for annual conveyance of up to 750 acre-feet of nonproject water through the Nast and Boustead Tunnel System.

36. City of Dickinson, P–SMBP, North Dakota: In accordance with Public Law 106–566, a BON has been prepared to amend contract No. 9–07–60–W0384 which will allow the City to pay a lump-sum payment in lieu of its remaining repayment obligation for construction costs associated with the bascule gate. The BON has been approved by the Commissioner.

37. Lower Marias Unit, P–SMBP, Montana: Initiating long-term water service contract for up to 910 acre-feet

of storage from Tiber Reservoir to irrigate 303.2 acres. Temporary/interim contracts are being issued to allow continued delivery of water and the time necessary to complete required actions for the long-term contract process.

38. Tom Green County Water Control and Improvement District No. 1, San Angelo Project, Texas: The District has requested deferment of its 2002 repayment obligation. A BON has been prepared to amend contract No. 14–06–500–369.

39. La Feria ID, Lower Rio Grande Rehabilitation Project, LaFeria Division, Texas: The District has repaid the repayment obligation and title to all project works, lands, or interests in lands originally conveyed by the District to the United States shall now be transferred back to the District in accordance with the authorizing legislation, Public Law 86–357 dated September 22, 1959, and the contract shall be terminated.

40. Northern Colorado Water Conservancy District, Colorado-Big Thompson Project, Colorado: Acting by and through the Pleasant Valley Pipeline Project Water Activity Enterprise, beginning discussions and draft BON for a long-term contract for conveyance of nonproject water through Colorado-Big Thompson Project facilities.

Dated: January 4, 2002.

Elizabeth Cordova-Harrison,

Deputy Director, Office of Policy.

[FR Doc. 02–2316 Filed 1–30–02; 8:45 am]

BILLING CODE 4310–MN–P

INTERNATIONAL TRADE COMMISSION

[Investigation No. 731–TA–917 (Final)]

Stainless Steel Bar From Taiwan

AGENCY: United States International Trade Commission.

ACTION: Termination of investigation.

SUMMARY: On January 23, 2002, the Department of Commerce published notice in the **Federal Register** (67 FR 3152) of a negative final determination of sales at less than fair value in connection with the subject investigation. Accordingly, pursuant to § 207.40(a) of the Commission's Rules of Practice and Procedure (19 CFR 207.40(a)), the antidumping investigation concerning stainless steel bar from Taiwan (investigation No. 731–TA–917 (Final)) is terminated.

EFFECTIVE DATE: January 23, 2002.

FOR FURTHER INFORMATION CONTACT: Larry Reavis (202–205–3185), Office of Investigations, U.S. International Trade Commission, 500 E Street SW., Washington, DC 20436. Hearing-impaired individuals are advised that information on this matter can be obtained by contacting the Commission's TDD terminal on 202–205–1810. Persons with mobility impairments who will need special assistance in gaining access to the Commission should contact the Office of the Secretary at 202–205–2000. General information concerning the Commission may also be obtained by accessing its Internet server, *http://www.usitc.gov*. The public record for this investigation may be viewed on the Commission's electronic docket (EDIS-ON-LINE) at *http://dockets.usitc.gov/eol/public*.

Authority: This investigation is being terminated under authority of title VII of the Tariff Act of 1930; this notice is published pursuant to section 201.10 of the Commission's rules (19 CFR 201.10).

By order of the Commission.

Issued: January 25, 2002.

Marilyn R. Abbott,

Acting Secretary.

[FR Doc. 02–2304 Filed 1–30–02; 8:45 am]

BILLING CODE 7020–02–P

DEPARTMENT OF JUSTICE

Immigration and Naturalization Service

Agency Information Collection Activities: Proposed Collection; Comments Requested

ACTION: 30-Day notice of collection under review: Extension of request for the return of original document(s).

The Department of Justice (DOJ), Immigration and Naturalization Service has submitted the following information collection request to the Office of Management and Budget (OMB) for review and approval in accordance with the Paperwork Reduction Act of 1995. The proposed information collection is published to obtain comments from the public and affected agencies. This proposed information collection was previously published in the **Federal Register** (Volume 66, Number 159, page 43029) on 08/16/01, allowing for a 60-day comment period.

The purpose of this notice is to allow for an additional 30 days for public comment until March 4, 2002. This process is conducted in accordance with 5 CFR 1320.10. Written comments and/or suggestions regarding the items contained in this notice, especially the estimated public burden and associated response time, should be directed to The Office of Management and Budget, Office of Information and Regulatory Affairs, Attention Department of Justice Desk Officer, 725–17th Street, NW., Suite 10102, Washington, DC 20503. Additionally, comments may be submitted to OMB via facsimile to (202)–395–5806.

Written comments and suggestions from the public and affected agencies concerning the proposed collection of information are encouraged. Your comments should address one or more of the following four points:

(1) Evaluate whether the proposed collection of information is necessary for the proper performance of the functions of the agency, including whether the information will have practical utility;

(2) Evaluate the accuracy of the agencies estimate of the burden of the proposed collection of information, including the validity of the methodology and assumptions used;

(3) Enhance the quality, utility, and clarity of the information to be collected; and

(4) Minimize the burden of the collection of information on those who are to respond, including through the use of appropriate automated, electronic, mechanical, or other technological collection techniques or other forms of information technology, e.g., permitting electronic submission of responses.

Overview of This Information Collection

(1) *Type of Information Collection:* Extension.

(2) *Type of the Form/Collection:* Request for the Return of Original Document(s).

(3) *Agency form number, if any, and the applicable component of the Department of Justice sponsoring the collection:* Form G–884, Immigration and Naturalization Service, Department of Justice.

(4) *Affected public who will be asked or required to respond, as well as a brief abstract:* Individuals or households.

(5) *An estimate of the total number of respondents and the amount of time estimated for an average respondent to respond:* There are 2,500 respondents. The amount of estimated time required for the average respondent to respond is: 15 minutes (.25 hours).

(6) *An estimate of the total public burden (in hours) associated with the collection:* 625 hours annually.

If you have additional comments, suggestions, or need a copy of the proposed information collection

instrument with instructions, or additional information, please contact Richard A. Sloan, Director, Policy Directives and Instructions Branch, Immigration and Naturalization Service, U.S. Department of Justice, 425 I Street, NW., Room 4034, Washington, DC 20536; (202) 514–3291. Comments and suggestions regarding items contained in this notice, especially regarding the estimated public burden and associated response time may also be directed to Richard A. Sloan.

If additional information is required contact: Robert B. Briggs, Department Clearance Officer, Information Management and Security Staff, Justice Management Division, United States Department of Justice, 601 D Street NW., Patrick Henry Building, Suite 1600, NW., Washington, DC 20530.

Dated: January 25, 2002.

Richard A. Sloan,

Department Clearance Officer, Department of Justice, Immigration and Naturalization Service.

[FR Doc. 02–2350 Filed 1–30–02; 8:45 am]

BILLING CODE 4410–10–M

DEPARTMENT OF JUSTICE

Immigration and Naturalization Service

Agency Information Collection Activities: Proposed Collection; Comment Request

ACTION: Notice of information collection under review: Contacts Concerning Project Speak Out!

The Department of Justice, Immigration and Naturalization Service (INS) has submitted the following information collection request to the Office of Management and Budget (OMB) for review and clearance in accordance with the Paperwork Reduction Act of 1995. The information collection was previously published in the **Federal Register** on November 15, 2001 at 66 FR 57486, allowing for a 60-day public comment period. No public comment was received on this information collection.

The purpose of this notice is to allow an additional 30 days for public comments. Comments are encouraged and will be accepted until March 4, 2002. This process is conducted in accordance with 5 CFR 1320.10.

Written comments and/or suggestions regarding the items contained in this notice, especially regarding the estimated public burden and associated response time, should be directed to the Office of Management and Budget, Office of Information and Regulatory Affairs, Attention: Department of Justice Desk Officer, 725—17th Street, NW., Room 10235, Washington, DC 20530.

Written comments and suggestions from the public and affected agencies concerning the proposed collection of information should address one or more of the following four points:

(1) Evaluate whether the proposed collection of information is necessary for the proper performance of the functions of the agency, including whether the information will have practical utility;

(2) Evaluate the accuracy of the agency's estimate of the burden of the proposed collection of information, including the validity of the methodology and assumptions used;

(3) Enhance the quality, utility, and clarity of the information to be collected; and

(4) Minimize the burden of the collection of information on those who are to respond, including through the use of appropriate automated, electronic, mechanical, or other technological collection techniques or other forms of information technology, e.g., permitting electronic submission of responses.

Overview of this information collection:

(1) *Type of Information Collection:* New information collection.

(2) *Title of the Form/Collection:* Contacts Concerning Project Speak Out!

(3) *Agency form number, if any, and the applicable component of the Department of Justice sponsoring the collection:* Form G–1046, Office of Policy and Planning, Immigration and Naturalization Service.

(4) *Affected public who will be asked or required to respond, as well as a brief abstract:* Primary: Individuals or Households. This form provides a standardized way of recording the number of individuals contacting the Community Based Organizations concerning the practitioner fraud pilot program. The INS will use the information collected on the form to determine how many persons are served by the program and if its public outreach efforts are successful.

(5) *An estimate of the total number of respondents and the amount of time estimated for an average respondent to respond:* 60,000 responses at 52 minutes (0.866 hours) per response.

(6) *An estimate of the total public burden (in hours) associated with the collection:* 51,960 annual burden hours.

If you have additional comments, suggestions, or need a copy of the proposed information collection instrument with instructions, or additional information, please contact Richard A. Sloan 202–514–3291, Director, Policy Directives and Instructions Branch, Immigration and Naturalization Service, U.S. Department of Justice, 425 I Street, NW., Room 4034, Washington, DC 20536. Additionally, comments and/or suggestions regarding the item(s) contained in this notice, especially regarding the estimated public burden and associated response time may also be directed to Mr. Richard Sloan.

If additional information is required contact: Mr. Robert B. Briggs, Clearance Officer, United States Department of Justice, Information Management and Security Staff, Justice Management Division, Patrick Henry Building, 601 D Street, NW., Suite 1600, Washington, DC 20530.

Dated: January 25, 2002.

Richard A. Sloan,

Department Clearance Officer, Immigration and Naturalization Service, Department of Justice.

[FR Doc. 02–2351 Filed 1–30–02; 8:45 am]

BILLING CODE 4410–10–M

DEPARTMENT OF LABOR

Office of the Assistant Secretary for Administration and Management

Agency Information Collection Activities: Proposed Collection; Comment Request; Applicant Background Questionnaire

AGENCY: Office of the Assistant Secretary for Administration and Management (OASAM), Department of Labor.

ACTION: Notice.

SUMMARY: The Department of Labor, as part of its continuing effort to reduce paperwork and respondent burden conducts a preclearance consultation program to provide the general public and Federal agencies with an opportunity to comment on proposed and/or continuing collection of information in accordance with the Paperwork Reduction Act of 1995 (PRA95) [44 U.S.C. 3506(c)(2)(A)]. This program helps to ensure that requested data can be provided in the desired format, reporting burden (time and financial resources) is minimized, collection requirements are clearly understood, and the impact of collection requirements on respondents can be properly assessed. Currently, the Department of Labor is soliciting comments concerning the proposed extension of the ''Applicant Background Questionnaire''.

A copy of the proposed information collection request (ICR) can be obtained by contacting the office listed above in the **ADDRESSES** section of this notice.

DATES: Written comments must be submitted to the office listed in the **ADDRESSES** section below on or before April 1, 2002.

ADDRESSES: Anderson Glasgow, U.S. Department of Labor, Human Resource Policy and Accountability Center, 200 Constitution Ave. NW., Room N–5470, Washington, DC 20210; Phone: (202) 693–7738; Written comments limited to 10 pages or fewer may also be transmitted by facsimile to: (202) 693–7631; Internet; *glasgow-william@dol.gov.*

SUPPLEMENTARY INFORMATION:

I. Background

The Department of Labor, as part of its obligation to provide equal employment opportunities, is charged with ensuring that qualified individuals in groups that are underrepresented in various occupations, are included in applicant pools for the Department's positions. See 5 U.S.C. 7201(c); 29 U.S.C. 791; 29 U.S.C. 2000e–16; 5 CFR 720.204; 29 CFR 1614.101(a). To achieve this goal, DOL employment offices have conducted targeted outreach to a variety of sources, including educational institutions, professional organizations, newspapers and magazines. DOL has also participated in career fairs and conferences that reach high concentrations of Hispanics, African Americans, Native Americans, Asians, and persons with disabilities.

Without the data provided by this collection, DOL does not have the ability to evaluate the effectiveness of any of these targeted recruiting strategies because collection of racial and national origin information only occurs at the point of hiring. DOL needs to collect data on the pools of applicants which result from the various targeted recruitment strategies listed above. After the certification and selection process has been completed, it is necessary to cross-reference the data collected with the outcome of the qualifications review in order to evaluate the quality of applicants from various recruitment sources. With the information from this collection, DOL can adjust and redirect its targeted recruitment to achieve the best result. DOL will also be able to respond to requests for information received from the Office of Personnel Management (OPM) in the course of OPM's evaluation and oversight activities.

II. Desired Focus of the Comments

The Department of Labor is particularly interested in comments which:

- Evaluate whether the proposed collection of information is necessary for the proper performance of the functions of the agency, including whether the information will have practical utility;
- Enhance the quality, utility, and clarity of the information to be collected; and
- Evaluate the accuracy of the agency's estimate of the burden of the proposed collection of information, including the validity of the methodology and assumptions used;
- Minimize the burden of the collection of information on those who are to respond, including through the use of appropriate automated, electronic, mechanical, or other technological collection techniques or other forms of information technology, e.g., permitting electronic submissions of responses.

III. Current Actions

This notice requests an extension of the current Office of Management and Budget approval of the Applicant Background Questionnaire. Extension is necessary to continue to evaluate the effectiveness of agency recruitment programs in attracting applicants from underrepresented sectors of the population.

Type of Review: Extension of a currently approved collection Agency: U.S. Department of Labor, Office of the Assistant Secretary for Administration and Management.

Title: Applicant Background Questionnaire.

OMB Number: 1225–0072.

Affected Public: Applicants for positions recruited in the Department of Labor.

Total Respondents: 3,000.

Frequency: one time per respondent.

Total Responses: 3,000.

Average Time per Response: 5 minutes.

Estimated Total Burden Hours: 250 hours.

Total Burden Cost (capital/startup): $0.

Total Burden Cost (operating/maintaining): $0.

Comments submitted in response to this notice will be summarized and/or included in the request for Office of Management and Budget approval of the information collection request; they will also become a matter of public record.

Dated: January 18, 2002.

Tali R. Stepp,

Director of Human Resources.

[FR Doc. 02–2322 Filed 1–30–02; 8:45 am]

BILLING CODE 4510–23–M

DEPARTMENT OF LABOR

Employment and Training Administration

[TA–W–39,449A and NAFTA–04955A and TA–W–39,437A and NAFTA–04954]

Agere Systems Optoelectronics Division, Reading and Breinigsville, PA; Notice of Negative Determination Regarding Application for Reconsideration

By application of October 5, 2001 and October 8, 2001, the International Brotherhood of Electrical Workers, Local 1560 and the International Brotherhood of Electrical Workers, Local 1898, respectively requested administrative reconsideration of the Department's negative determination regarding eligibility for workers and former workers of the subject firm to apply for Trade Adjustment Assistance (TAA) under petition TA–W–39,449A and North American Free Trade Agreement-Transitional Adjustment Assistance (NAFTA–TAA) under petition NAFTA–4955A and Trade Adjustment Assistance (TAA) under petition TA–W–39,437A and North American Free Trade Agreement-Transitional Adjustment Assistance (NAFTA–TAA) under petition NAFTA–4954, respectively. The denial notices applicable to workers of Agere Systems, Optoelectronics Division, Breinigsville, Pennsylvania, were signed on August 29, 2001 (TA–W–4937A and TA–W–39,449A), and August 23, 2001 (NAFTA–4955A and NAFTA–4954) and published in the **Federal Register** on September 11, 2001 (66 FR 47241) and (66 FR 47243), respectively.

Pursuant to 29 CFR 90.18(c) reconsideration may be granted under the following circumstances:

(1) If it appears on the basis of facts not previously considered that the determination complained of was erroneous;

(2) if it appears that the determination complained of was based on a mistake in the determination of facts not previously considered; or

(3) if in the opinion of the Certifying Officer, a misinterpretation of facts or of the law justified reconsideration of the decision.

The TAA petitions, filed on behalf of workers at Agere Systems, Optoelectronics Division, Breinigsville,

Pennsylvania, and Agere Systems, Optoelectronics Division, Reading, Pennsylvania producing optoelectronics, were denied because the ''contributed importantly'' group eligibility requirement of section 222(3) of the Trade Act of 1974, as amended, was not met. The ''contributed importantly'' test is generally demonstrated through a survey of the workers' firm's customers. The survey revealed no increased customer imports of optoelectronics during the relevant period. The investigation further revealed that imports of optoelectronics by the company were negligible.

The NAFTA–TAA petitions for the same worker groups were denied because criteria (3) and (4) of the group eligibility requirements in paragraph (a)(1) of section 250 of the Trade Act, as amended, were not met. A survey was conducted and revealed that customers did not increase their imports of optoelectronics from Mexico or Canada during the relevant period. The subject firm did not import optoelectronics from Mexico or Canada, nor was production of optoelectronics shifted from the workers' firm to Mexico or Canada.

The petitioners allege that plant production is being shifted to Asia and Mexico and that the products will be imported back to the United States.

The petitioners supplied information concerning the company's manufacturing strategy concerning the transfer of plant production to Asia, in conjunction with various other factors that are scheduled to occur. The planned transfer and potential imports are beyond the relevant period of the initial investigation and thus could not be considered during the investigation.

The petitioners further allege that certain products produced by the subject plant were being outsourced to Canada and/or Mexico.

Based on data supplied by the company, only negligible amounts of products produced by the subject plant were being outsourced to foreign sources.

The petitioners also indicated that some modulators, similar to those produced by the subject plant, are scheduled to be made in Singapore.

The shift in production to Singapore does not meet the ''contributed importantly'' test unless the product was imported back to the United States during the investigation period.

The majority of the information recently provided by the petitioners concerns a time period following the initial decision. The petitioner with their request for reconsideration, attached new TAA and NAFTA–TAA petitions for the Breiningsville, Pennsylvania plant. Those petitions will be instituted shortly. The Department based on the information provided during reconsideration is also initiating new TAA and NAFTA–TAA investigations for the Reading, Pennsylvania location.

Conclusion

After review of the application and investigative findings, I conclude that there has been no error or misinterpretation of the law or of the facts which would justify reconsideration of the Department of Labor's prior decisions. Accordingly, the application is denied.

Signed at Washington, DC, this 15th day of January, 2002.

Edward A. Tomchick,

Director, Division of Trade Adjustment Assistance.

[FR Doc. 02–2341 Filed 1–30–02; 8:45 am]

BILLING CODE 4510–30–M

DEPARTMENT OF LABOR

Employment and Training Administration

[TA–W–38,893 and NAFTA–04613]

The Budd Company Stamping and Frame Division Philadelphia, PA; Notice of Negative Determination of Reconsideration

On November 30, 2001, the Department issued an Affirmative Determination Regarding Application for Reconsideration for the workers and former workers of the subject firm. The notice was published in the **Federal Register** on December 26, 2001 (66 FR 66467).

The Department initially denied TAA to workers of The Budd Company, Stamping and Frame Division, Philadelphia, Pennsylvania because the ''contributed importantly'' group eligibility requirement of section 222(3) of the Trade Act of 1974, as amended, was not met. None of the respondents increased their import purchases of automotive stampings and assemblies, while reducing their purchases from the subject firm.

The Department denied NAFTA–TAA because the ''contributed importantly'' group eligibility requirement of section 250 was not met and because there was no shift in production to either Mexico or Canada. None of the customers increased their import purchases of automotive stampings and assemblies from Canada or Mexico, while reducing their purchases from the subject firm during the relevant period.

The workers at the subject firm were engaged in employment related to the production of automotive stampings and assemblies.

The petitioner indicated that the subject firm opened a new stamping plant in Silao, Mexico during the fall of 2000. The petitioner further stated that the opening of the Mexican plant resulted in a significant shift in plant production to Mexico.

On reconsideration, the Department contacted the company for an explanation of the alleged shift in plant production to Mexico. The company indicated that no work performed at The Budd Company, Stamping and Frame Division, Philadelphia, Pennsylvania was shifted to their joint venture facility located in Mexico. The company further indicated that they did not import products like and directly competitive with what the subject plant produced back to the United States during the relevant period.

Conclusion

After reconsideration, I affirm the original notice of negative determinations regarding eligibility to apply for worker adjustment assistance and NAFTA-Transitional Adjustment Assistance for workers and former workers of The Budd Company. Stamping and Frame Division, Philadelphia, Pennsylvania.

Dated: Signed at Washington, DC, this 2nd day of January 2002.

Edward A. Tomchick,

Director, Division of Trade Adjustment Assistance.

[FR Doc. 02–2335 Filed 1–30–02; 8:45 am]

BILLING CODE 4510–30–M

DEPARTMENT OF LABOR

Employment and Training Administration

[TA–W–38,424 and NAFTA–4441]

Georgia Pacific Chip and Saw Plant, Baileyville, ME; Notice of Revised Determination on Reconsideration

By letter dated April 12, 2001, the Paper, Allied-Industrial, Chemical and Energy Workers International Union, Local 1–1367 (PACE), requested administrative reconsideration of the Department's denial of TAA and NAFTA–TAA for workers of the subject firm. Workers at Georgia Pacific Corporation, Chip-and-Saw, Baileyville, Maine, are engaged in the production of softwood dimensional lumber.

On March 14, 2001 and March 13, 2001, the Department of Labor issued Negative Determination Regarding Eligibility to apply for Trade Adjustment Assistance (TAA) and NAFTA–Transitional Adjustment Assistance (NAFTA–TAA), respectively, applicable to workers and former workers of the subject firm. The TAA and NAFTA–TAA decisions were published in the Federal Register on April 16, 2001 (66 FR 19520) and (66 FR 169522), respectively.

The TAA petition was denied because the ''contributed importantly'' group eligibility requirement of section 222(3) of the Trade Act of 1974, as amended, was not met. The ''contributed importantly'' test is generally demonstrated through a survey of the workers' firm's customers. The investigation revealed that none of the subject firm customers reported increased import purchases of softwood lumber (dimensional).

The NAFTA–TAA petition for the same worker group was denied because criteria (3) and (4) of the group eligibility requirements in paragraph (a)(1) of section 250 of the Trade Act, as amended, were not met. There was no shift of production from the subject firm to Canada or Mexico, nor did the company import softwood lumber from Canada or Mexico. The Department conducted a survey of major customers of the subject firm regarding purchases of softwood lumber (dimensional). The survey revealed that the customers did not significantly increase import purchases of softwood lumber from Canada or Mexico.

In the request for reconsideration, PACE asserts that there was a contradiction in the TAA and NAFTA–TAA decisions, inasmuch as in the TAA petition denial, the finding that import purchases by the subject company of softwood dimensional lumber declined during the relevant time periods, while the NAFTA–TAA petition denial found the subject firm does not import softwood lumber.

The Department concurs with the PACE on this issue. On reconsideration, the Department conducted further import analysis. The analysis revealed that Georgia Pacific maintained a reliance on imports of softwood lumber from Canada and other sources, while reducing production and employment at the Chip and Saw Plant located in Baileyville, Maine.

From 1999 to 2000, U.S. imports of softwood lumber from Canada increased absolutely and relative to domestic production and consumption.

Conclusion

After careful review of the application and investigative findings on reconsideration, I conclude that increased imports, including those from Canada of articles like or directly competitive with softwood lumber, contributed importantly to the decline in sales or production and to the total or partial separation of workers of the subject firm. In accordance with the provisions of the Trade Act, I make the following certification:

All workers of Georgia Pacific, Chip and Saw Plant, Baileyville, Maine, engaged in employment related to the production of softwood lumber, who became totally or partially separated from employment on or after December 2, 1999, through two years from issuance of the revised determination, are eligible to apply for adjustment assistance under section 223 of the Trade Act of 1974; and

All workers of Georgia Pacific, Chip and Saw Plant, Baileyville, Maine, engaged in employment related to the production of softwood lumber, who became totally or partially separated from employment on or after January 2, 2000, through two years from the issuance of this revised determination, are eligible to apply for NAFTA–TAA under section 250 of the Trade Act of 1974.

Signed in Washington, DC, this 9th day of January 2002.

Edward A. Tomchick,

Director, Division of Trade Adjustment Assistance.

[FR Doc. 02–2344 Filed 1–30–02; 8:45 am]

BILLING CODE 4510–30–M

DEPARTMENT OF LABOR

Employment and Training Administration

Notice of Determinations Regarding Eligibility To Apply for Worker Adjustment Assistance and NAFTA Transitional Adjustment Assistance

In accordance with Section 223 of the Trade Act of 1974, as amended, the Department of Labor herein presents summaries of determinations regarding eligibility to apply for trade adjustment assistance for workers (TA–W) issued during the period of January, 2002.

In order for an affirmative determination to be made and a certification of eligibility to apply for worker adjustment assistance to be issued, each of the group eligibility requirements of Section 222 of the Act must be met.

(1) that a significant number or proportion of the workers in the workers' firm, or an appropriate subdivision thereof, have become totally or partially separated,

(2) that sales or production, or both, of the firm or subdivision have decreased absolutely, and

(3) that increases of imports of imports of articles like or directly competitive with articles produced by the firm or appropriate subdivision have contributed importantly to the separations, or threat thereof, and to the absolute decline in sales or production.

Negative Determinations for worker Adjustment Assistance

In each of the following cases the investigation revealed that criterion (3) has not been met. A survey of customers indicated that increased imports did not contribute importantly to worker separations at the firm.

TA–W–40,358; Pennsylvania Tool and Gages, Inc., Meadville, PA

TA–W–39,522; JLG Industries, Inc., Bedford, PA

TA–W–39,302; Honeywell Aircraft Landing Systems, South Bend, IN

TA–W–40,564; Texfi Industries, New York, NY

TA–W–40,314 & A; Trout Lake Farm LLC, Trout Lake, WA and Moses Lake, WA

TA–W–40,451; Modern Prototype, Troy, MI

TA–W–39,907; Alcoa Fujikura Ltd, Optical Fiber Systems, Houston, TX

In the following cases, the investigation revealed that the criteria for eligibility have not been met for the reasons specified.

Increased imports did not contribute importantly to worker separations at the firm.

TA–W–39,056; Peerless Pattern Works, Portland, OR

TA–W–39,433; The Penn Companies, St. Peters, MO

TA–W–40,071; PTC Alliance, Darlington, OH

TA–W–40,275; Tyco Electronics, Fiber Optics Div., Glen Rock, PA

TA–W–40,435; Telaxis Communications, South Deerfield, MA

The workers firm does not produce an article as required for certification under Section 222 of the Trade Act of 1974.

TA–W–40,560; DataMark, Inc., El Paso, TX

TA–W–40,479; Gate Gourmet International, Unit 498, Charlotte, NC

TA–W–40,441; Road Machinery Co., Bayard, NM

TA–W–40,562; Lake Superior and Ishpiming Railroad Co., Marquette, MI

TA–W–39,919; Antec/Keptel, Tinton Falls, NJ

Affirmative Determinations for Worker Adjustment Assistance

The following certifications have been issued; the date following the company name and location of each determination references the impact date for all workers of such determination.

TA–W–40,125; Arrow/SI, Winsted, CT: September 13, 2000.
TA–W–40,123; Crown Pacific Limited Partnership, Coeur D'Alene, ID: August 30, 2000.
TA–W–40,028; Story and Clark Piano Co., A Div. of QRS Music Rolls, Seneca, PA: August 30, 2000.
TA–W–39,939; Willamette Industries, Inc., Korpine Particleboard Div., Bend, OR: August 17, 2000.
TA–W–39,539; Mission Valley Fabrics, New Braunfels, TX: June 14, 2000.
TA–W–39,191; NVN Corp., Clifton, NJ: April 3, 2000.
TA–W–40,258; Superior Uniform Service Group, Inc., McGehee Industries, McGehee, AR: October 2, 2000.
TA–W–40,249; Liebert Corp., Irvine California Operations, Irvine, CA: September 27, 2000.
TA–W–40,243; Paulson Wire Rope Corp., Sunbury, PA: October 4, 2000.
TA–W–40,225; Atotech USA, State College, PA: October 4, 2000.
TA–W–40,198; Scion Valley, Inc., Meridian, TX: September 27, 2000.
TA–W–40,078; Guilford Mills, Pine Grove, PA: September 10, 2000.
TA–W–40,276; Dorel Juvenile Group, Inc., Formerly Cosco, Inc., Ft. Smith, AR: October 8, 2000.
TA–W–39,964 & A; NACCO Industries, Inc., Materials Handling Group, Assembly Building, Danville, IL and Parts Distribution Center, Danville, IL: June 26, 2000.
TA–W–40,520 & A; Hoskins Manufacturing Co., Mio, MI and Lewiston, MI: November 27, 2000.
TA–W–40,510; Applied Concepts, Inc., Warrendale, PA: November 14, 2000.
TA–W–40,491 & A; Wesley Industries, Inc., Bloomfield Hills, MI and New Haven Foundry, New Haven, MI: November 20, 2000.
TA–W–40,408; Carrier Corp., Conway Refrigeration Operations, Conway, AR: October 19, 2000.
TA–W–40,393; Stylemaster Apparel, Inc., Union, MO: November 27, 2000.
TA–W–40,329; D. K. Mold and Engineering, Inc., Wyoming, MI: October 23, 2000.
TA–W–39,356; Kendall Healthcare, Chatsworth, CA: May 16, 2000.
TA–W–39,584; Laco Sportswear, Inc., Chattanooga, TN: June 25, 2000.
TA–W–39,670 & A; Lamb-Grays Harbor Co., Hoquiam, WA and Meridian, MS: July 9, 2000.
TA–W–40,099; Shasta Paper Co., Anderson, CA: September 4, 2000.
TA–W–40,178; Corning Cable Systems, Optical Assemblies Plant, Hickory, NC: September 20, 2000.
TA–W–40,180; Skinner Engine Co., Erie, PA: September 27, 2000.
TA–W–40,261; Capitol Manufacturing, Harsco Corp. Gas and Fluid Control Group, Lansing, OH: October 4, 2000.
TA–W–40,404; Fender Musical Instruments, Westerly. RI: November 27, 2000.
TA–W–40,420 & A; International Wire Group, Inc., Bare Wire Div., Plant #4, Pine Bluff, AR and Shunt Plant, Pine Bluff, AR: October 19, 2000.
TA–W–40,462; Vishay Vitramon, Roanoke, VA: December 12, 2000.
TA–W–40,466; Precision Cable Assemblies, Logansport, IN: December 14, 2000.
TA–W–40,532; Rich Products Manufacturing Corp., Appleton Div., Appleton, WI: November 1, 2000.

Also, pursuant to Title V of the North American Free Trade Agreement Implementation Act (P.L. 103–182) concerning transitional adjustment assistance hereinafter called (NAFTA–TAA) and in accordance with Section 250(a), Subchapter D, Chapter 2, Title II, of the Trade Act as amended, the Department of Labor presents summaries of determinations regarding eligibility to apply for NAFTA–TAA issued during the month of January, 2002.

In order for an affirmative determination to be made and a certification of eligibility to apply for NAFTA–TAA the following group eligibility requirements of Section 250 of the Trade Act must be met:

(1) that a significant number or proportion of the workers in the workers' firm, or an appropriate subdivision thereof, (including workers in any agricultural firm or appropriate subdivision thereof) have become totally or partially separated from employment and either—

(2) that sales or production, or both, of such firm or subdivision have decreased absolutely,

(3) that imports from Mexico or Canada of articles like or directly competitive with articles produced by such firm or subdivision have increased, and that the increases imports contributed importantly to such workers' separations or threat of separation and to the decline in sales or production of such firm or subdivision; or

(4) that there has been a shift in production by such workers' firm or subdivision to Mexico or Canada of articles like or directly competitive with articles which are produced by the firm or subdivision.

Negative Determinations NAFTA–TAA

In each of the following cases the investigation revealed that criteria (3) and (4) were not met. Imports from Canada or Mexico did not contribute importantly to workers' separations. There was no shift in production from the subject firm to Canada or Mexico during the relevant period.

NAFTA–TAA–05067 & A; Lamb-Grays Harbor Co., Hoquiam, WA and Meridian, MS.
NAFTA–TAA–05392 & A; International Wire Group, Inc., Bare Ware Div., Plant #4, Pine Bluff, AR and Bare Wire Div., Shunt Plant, Pine Bluff, AR.
NAFTA–TAA–05573; Metalloy Corp., Hudson, MI.
NAFTA–TAA–05638; Scientific Molding Corp. Ltd., SMC Texas Div., Brownsville, TX.
NAFTA–TAA–04773; PSC Scanning, Eugene, OR.
NAFTA–TAA–04966; The Penn Companies, St. Peters, MO.
NAFTA–TAA–05288; Curtron Manufacturing, Inc., Travelers Rest, SC.
NAFTA–TAA–05424; Paulson Wire Rope Corp., Sunbury, PA.
NAFTA–TAA–05524; Tresco Tool, Inc., Guys Milles, PA.
NAFTA–TAA–05584; Carrier Corp., Conway Refrigeration Operation, Conway, AR.
NAFTA–TAA–05590; Hoskins Manufacturing Co., Mio, MI.
NAFTA–TAA–05591; Hoskins Manufacturing Co., Lewiston, MI.
NAFTA–TAA–05611; Stylemaster Apparel, Inc., Union, MO.
NAFTA–TAA–05665; JBI LP, Osseo, WI.
NAFTA–TAA–04732; Peerless Pattern Works, Portland, OR.

The workers firm does not produce an article as required for certification under Section 250(a), Subchapter D, Chapter 2, Title II, the Trade Act of 1974, as amended.

NAFTA–TAA–05162; NACCO Industries, Inc., Materials Handling Group, Parts Distribution Center, Danville, IL

Affirmative Determinations NAFTA–TAA

NAFTA–TAA–04956; Kendall Healthcare, Chatsworth, CA: May 16, 2000.
NAFTA–TAA–05050; Laco Sportswear, Inc., Chattanooga, TN: June 28, 2000.
NAFTA–TAA–05429; Capitol Manufacturing, Harsco Corp. Gas and Fluid Control Group, Lansing, OH: October 9, 2000.
NAFTA–TAA–05438; United For Excellence, River Falls, WI: September 13, 2000.
NAFTA–TAA–05555; The Gillette Co., Oral-B Laboratories, Iowa City, IA: November 13, 2000.
NAFTA–TAA–05585 & A; VF Jeanswear Limited Partnership, Andrews, NC

and Greensboro, NC: November 20, 2000.

NAFTA–TAA–05682; Parallax Power Components LLC, Goodland, IN: December 14, 2000.

NAFTA–TAA–05692; Emerson Electric Co., Alco Controls Div., Hazlehurst, GA: December 17, 2000.

NAFTA–TAA–05618; Cherry Electrical Products, Div. of Cherry Corp., Pleasant Prairie, WI: December 3, 2000.

NAFTA–TAA–05621; Biltwell Clothing Co., Rector Sportswear, Rector, AR: November 9, 2000.

NAFTA–TAA–05628; Cooper Bussmann, Goldsboro, NC: November 27, 2000.

NAFTA–TAA–05633; Evergreen Wholesale Florist, Design Department, Seattle, WA: December 10, 2000.

NAFTA–TAA–05646; Smiley Hats, Inc., Sparks, NV.

NAFTA–TAA–05553; Guilford Mills, Inc., Pine Grove, PA: November 8, 2000.

NAFTA–TAA–05546; Storm Copper Components, Decatur, TN: November 13, 2000.

NAFTA–TAA–05499; Prime Tanning Corp., St. Joseph Plant, St. Joseph, MO: October 24, 2000.

NAFTA–TAA–05460; Summitville Tiles, Inc., Summitville Carolina Div., Morgaton, NC: October 16, 2000.

NAFTA–TAA–05423; Wabash National Corp., Wabash National, LP, Huntsville, TN: September 25, 2000.

NAFTA–TAA–05414; Bobs Candies, Inc., Including Workers of Kelly Temporary Services, Albany, GA: October 9, 2000.

NAFTA–TAA–05359; Crown Pacific Limited Partnership, Coeur D'Alene, ID: August 30, 2000.

I hereby certify that the aforementioned determinations were issued during the month of January, 2002. Copies of these determinations are available for inspection in Room C–5311, U.S. Department of Labor, 200 Constitution Avenue, NW., Washington, D.C. 20210 during normal business hours or will be mailed to persons who write to the above address.

Dated: January 22, 2002.

Edward A. Tomchick,

Director, Division of Trade Adjustment Assistance.

[FR Doc. 02–2327 Filed 1–30–02; 8:45 am]

BILLING CODE 4510–30–M

DEPARTMENT OF LABOR

Employment and Training Administration

[TA–W–38,791 and NAFTA–04630]

Sierra Pacific Industries Loyalton, CA; Notice of Negative Determination Regarding Application for Reconsideration

By application of May 31, 2001, the United Brotherhood of Carpenters & Joiners of America, Western Council of Industrial Workers, Local Union 3074 requested administrative reconsideration of the Department's negative determination regarding eligibility for workers and former workers of the subject firm to apply for Trade Adjustment Assistance (TAA) under petition TA–W–38,791 and North American Free Trade Agreement-Transitional Adjustment Assistance (NAFTA–TAA) under petition NAFTA–4630. The denial notices applicable to workers of Sierra Pacific Industries, Loyalton, California, were signed on April 24, 2001 (TA–W–38,791), and April 30, 2001 (NAFTA–4630) and published in the **Federal Register** on May 9, 2001 (66 FR 23733) and May 18, 2001 (66 FR 27691), respectively.

Pursuant to 29 CFR 90.18(c) reconsideration may be granted under the following circumstances:

(1) If it appears on the basis of facts not previously considered that the determination complained of was erroneous;

(2) If it appears that the determination complained of was based on a mistake in the determination of facts not previously considered; or

(3) If in the opinion of the Certifying Officer, a misinterpretation of facts or of the law justified reconsideration of the decision.

The TAA petition, filed on behalf of workers at Sierra Pacific Industries, Loyalton, California, producing softwood dimensional lumber, was denied because the ''contributed importantly'' group eligibility requirement of section 222(3) of the Trade Act of 1974, as amended, was not met. The ''contributed importantly'' test is generally demonstrated through a survey of the workers' firm's customers. The survey revealed no increase customer imports of softwood dimensional lumber during the relevant period.

The NAFTA–TAA petition for the same worker group was denied because criteria (3) and (4) of the group eligibility requirements in paragraph (a)(1) of Section 250 of the Trade Act, as amended, were not met. A survey was conducted and revealed that customers did not increase their imports of softwood dimensional lumber from Canada or Mexico during the relevant period. The subject firm did not import softwood dimensional lumber, nor was production of softwood dimensional lumber shifted from the workers' firm to Mexico or Canada.

The petitioner alleges that the company in their closure notice indicated that the subject facility has been impacted by imports of softwood lumber from Canada. The petitioner supports this statement by indicating that the United States International Trade Commission, (USITC Publication No. 3426, May 2001) in the conclusion statement ''for the foregoing reasons, we determine there is a reasonable indication that an industry in the United States is threatened with material injury by reason of imports of softwood lumber from Canada are allegedly subsidized by the Government of Canada and sold in the United States at less than fair value.'' The USITC preliminary decision was established after the original TAA and NAFTA–TAA investigations were completed. The Department does examine current USITC decisions during TAA and NAFTA–TAA investigations for import trends as appropriate. An examination of the USITC investigation revealed that Canadian and aggregate U.S. imports of softwood lumber remained relatively stable in the year 2000 over the corresponding 1999 period. Any increases in imports are relatively small and not a major contributing factor to the ''contributed importantly'' criterion of worker group's eligibility requirements of section 222 of the Trade Act.''

The USITC softwood lumber imports statistics provided in the USITC investigation are basket categories and not specific to softwood dimensional lumber and thus not specific to the products produced at the subject firm.

The USITC preliminary decision focuses on the fact that there is reasonable indication that the softwood lumber industry is threatened with material injury by reason of subject imports of softwood lumber from Canada that are allegedly subsidized and sold at less than fair value. A foreign company subsidizing and selling at less than fair value is also not a relevant factor relating to the ''contributed importantly'' criterion of worker group's eligibility requirements of section 222 of the Trade Act.

The petitioner further alleges that high log prices contributed to Sierra Pacific Industries' decision to close their Loyalton facility.

The price of logs is not relevant to the TAA or NAFTA–TAA investigations that were filed on behalf of workers producing softwood dimensional lumber.

Conclusion

After review of the application and investigative findings, I conclude that there has been no error or misinterpretation of the law or of the facts which would justify reconsideration of the Department of Labor's prior decisions. Accordingly, the application is denied.

Signed at Washington, DC, this 14th day of January, 2002.

Edward A. Tomchick,

Director, Division of Trade Adjustment Assistant.

[FR Doc. 02–2339 Filed 1–30–02; 8:45 am]

BILLING CODE 4510–30–M

DEPARTMENT OF LABOR

Employment and Training Administration

[TA–W–38,809]

Blue Mountain Products, LLC Pendleton, OR; Notice of Negative Determination on Reconsideration

On December 11, 2001, the Department issued an Affirmative Determination Regarding Application for Reconsideration for the workers and former workers of the subject firm. The notice will soon be published in the **Federal Register**.

The Department initially denied TAA to workers of Blue Mountain Products, LLC, Pendleton, Oregon based on criterion (3) of the group eligibility requirements of section 222 of the Trade Act of 1974, as amended, not being met. Increased imports did not contribute importantly to worker separations at the subject firm. The workers at the subject firm were engaged in employment related to the production of softwood dimensional lumber.

The petitioner feels that the survey responses may have been filled out incorrectly and that some customers did not respond.

The Department upon the request of the petitioner, examined the survey results and contracted a major customer requesting clarification of their survey response.

The clarification of the respondent's survey revealed that the customer significantly decreased its imports of softwood dimensional lumber, while decreasing its purchases from the subject firm.

Also, upon reexamination, the responses of the initial survey fairly represented customer purchases of dimensional lumber during the relevant period. A review of the survey responses revealed that declining customers significantly decreased their imports of dimensional lumber, while decreasing their purchases from the Blue Mountain Products, LLC during the relevant period.

Conclusion

After consideration, I affirm the original notice of negative determination of eligibility to apply for worker adjustment assistance for workers and former workers of Blue Mountain Products, LLC, Pendleton, Oregon.

Signed at Washington, DC, this 2nd day of January 2002.

Edward A. Tomchick,

Director, Division of Trade Adjustment Assistance.

[FR Doc. 02–2336 Filed 1–30–02; 8:45 am]

BILLING CODE 4510–30–M

DEPARTMENT OF LABOR

Employment and Training Administration

[TA–W–39,619]

Converse, Inc. Currently Known as CVEO Corp. Charlotte, NC; Amended Certification Regarding Eligibility To Apply for Worker Adjustment Assistance

In accordance with section 223 of the Trade Act of 1974 (19 USC 2273) the Department of Labor issued a Certification of Eligibility to Apply for Worker Adjustment Assistance on November 28, 2001, applicable to workers of converse, Inc., Charlotte, North Carolina. The notice was published in the **Federal Register** on December 18, 2001 (66 FR 65220).

At the request of the company, the Department reviewed the certification for workers of the subject firm. The workers are engaged in employment related to the distribution of canvas and rubber athletic footwear.

New information received from the company shows that in May, 2001, Converse, Inc. became known as CVEO Corp. Information also shows that some workers separated from employment at Converse, Inc. had their wages reported under a separate unemployment insurance (UI) tax account for CVEO Corp.

Accordingly, the Department is amending the certification to properly reflect this matter.

The amended notice applicable to TA–W–39, 619 is hereby issued as follows:

All workers Converse, Inc., currently known as CVEO Corp. Charlotte, North Carolina who became totally or partially separated from employment on or after June 25, 2000, through November 28, 2003 are eligible to apply for adjustment assistance under section 223 of the Trade Act of 1974.

Signed at Washington, DC, this 8th day of January, 2002.

Linda G. Poole,

Certifying Officer, Division of Trade Adjustment Assistance.

[FR Doc. 02–2349 Filed 1–30–02; 8:45 am]

BILLING CODE 4510–30–M

DEPARTMENT OF LABOR

Employment and Training Administration

[TA–W–40,422]

Crown Marking Equipment Co. Warrington, PA; Notice of Termination of Investigation

Pursuant to Section 221 of the Trade Act of 1974, an investigation was initiated on December 10, 2001, in response to a petition filed by a company official on behalf of workers at Crown Marking Equipment Company, Warrington, Pennsylvania.

The company official submitting the petition has requested that the petition be withdrawn. Consequently, further investigation in this case would serve no purpose, and the investigation has been terminated.

Signed in Washington, DC, this 16th day of January, 2002.

Linda G. Poole,

Certifying Officer, Division of Trade Adjustment Assistance.

[FR Doc. 02–2326 Filed 1–30–02; 8:45 am]

BILLING CODE 4510–30–M

DEPARTMENT OF LABOR

Employment and Training Administration

[TA–W–38,646]

CSC Ltd Warren, OH; Including an Employee of CSC Ltd, Warren, OH Located in Franklin Park, IL; Amended Certification Regarding Eligibility To Apply for Worker Adjustment Assistance

In accordance with section 223 of the Trade Act of 1974 (19 U.S.C. 2273) the Department of Labor issued a Certification of Eligibility to Apply for

Worker Adjustment Assistance on April 12, 2001, applicable to workers of CSC Ltd, Warren, Ohio. The notice was published in the **Federal Register** on May 2, 2001 (66 FR 22007).

At the request of a petitioner, the Department reviewed the certification for workers of the subject firm. New information shows that a worker separation occurred involving an employee of the CSC Ltd, Warren, Ohio facility located in Franklin Park, Illinois. This employee was engaged in employment related to the production of SBQ steel bar at the Warren, Ohio location of the subject firm.

Based on these findings, the Department is amending this certification to include an employee of the CSC Ltd, Warren, Ohio located in Franklin Park, Illinois.

The intent of the Department's certification is to include all workers of CSC Ltd. adversely affected by increased imports.

The amended notice applicable to TA–W–38,646 is hereby issued as follows:

All workers of CSC Ltd., Warren, Ohio, including a worker CSC, Ltd., Warren, Ohio located in Franklin Park, Illinois, who became totally or partially separated from employment on or after January 22, 2000, through April 12, 2003, are eligible to apply for adjustment assistance under section 223 of the Trade Act of 1974.

Signed at Washington, DC, this 8th day of January, 2002.

Linda G. Poole,

Certifying Officer, Division of Trade Adjustment Assistance.

[FR Doc. 02–2348 Filed 1–30–02; 8:45 am]

BILLING CODE 4510–30–M

DEPARTMENT OF LABOR

Employment and Training Administration

[TA–W–39,112]

DuCoa, L.P., Verona, MO; Notice of Revised Determination on Reconsideration

By letter of August 21, 2001, the company requested administrative reconsideration regarding the Department's Negative Determination Regarding Eligibility to Apply for Worker Adjustment Assistance, applicable to the workers of the subject firm.

The initial investigation resulted in a negative determination issued on July 16, 2001, based on the finding that imports of calcium propionate, sodium propionate and calcium acetate did not contribute importantly to worker separations at the subject plant. The denial notice was published in the **Federal Register** on August 6, 2001 (66 FR 41052).

To support the request for reconsideration, the company supplied additional information. The company indicated that plant production was shifted to an affiliated plant located in the Netherlands and that the foreign plant imported the propionates and acetate back to the United States to serve the subject firm's domestic customer base during the relevant period.

The company also indicated that the overwhelming majority of their customer base was directed toward the U.S. market and that the products sold were not for the export market as indicated in the initial decision.

Conclusion

After careful review of the additional facts obtained on reconsideration, I conclude that increased imports of articles like or directly competitive with those produced at DuCoa, L.P., Verona, Missouri contributed importantly to the declines in sales or production and to the total or partial separation of workers at the subject firm. In accordance with the provisions of the Act, I make the following certification:

All workers of DuCoa, L.P., Verona, Missouri, who became totally or partially separated from employment on or after April 11, 2000 through two years from the date of this certification, are eligible to apply for adjustment assistance under Section 223 of the Trade Act of 1974.

Signed in Washington, DC, this 26th day of December 2001.

Edward A. Tomchick,

Director, Division of Trade Adjustment Assistance.

[FR Doc. 02–2342 Filed 1–30–02; 8:45 am]

BILLING CODE 4510–30–M

DEPARTMENT OF LABOR

Employment and Training Administration

[TA–W–39,365]

Eagle Affiliates Harrison, NJ; Notice of Negative Determination Regarding Application for Reconsideration

By application of August 23, 2001, a petitioner requested administrative reconsideration of the Department's negative determination regarding eligibility for workers and former workers of the subject firm to apply for Trade Adjustment Assistance (TAA). The denial notice applicable to workers of Eagle Affiliates, Harrison, New Jersey was issued on July 23, 2001, and was published in the **Federal Register** on August 15, 2001 (66 FR 42879).

Pursuant to 29 CFR 90.18(c) reconsideration may be granted under the following circumstances:

(1) If it appears on the basis of facts not previously considered that the determination complained of was erroneous;

(2) If it appears that the determination complained of was based on a mistake in the determination of facts not previously considered; or

(3) If in the Opinion of the Certifying Officer, a misinterpretation of facts or of the law justified reconsideration of the decision.

The investigation findings revealed that criterion (3) of the group eligibility requirements of section 222 of the Trade Act of 1974 was not met. Increased imports did not contribute importantly to worker separations at the subject firm. Company imports are of products that are not and can not be made by the subject firm. Imports by the company are for the primary purpose to expand the subject firm's product line and not displace or replace the existing product line.

The request for reconsideration claims that the company imported products like and directly competitive with what the subject plant produced.The petitioner provided examples of products that are like and directly competitive with products produced at the subject firm.

The review of data supplied during the initial investigation shows that a meaningful portion of the company's sales consists of imported products. However, most of these products are hobby/craft related and stand alone items. They are new and unique and do not replace the overwhelming majority of products the company produces and do not provide an alternative to any products the company sells. In summary, company imports of hobby/craft items like and directly competitive with what the subject plant produces are negligible.

The company further indicated that a small portion of houseware sales consists of imports, but are negligible in relation to the products produced by the subject firm.

The preponderance in the declines in employment at the subject plant is related to plant products being outsourced to another domestic firm.

The survey results conducted during the initial investigation revealed that none of the customers increased their imports of products like and directly competitive with what the subject plant produced during the relevant period.

Conclusion

After review of the application and investigative finding, I conclude that there has been no error or misinterpretation of the law or of the facts which would justify reconsideration of the Department of Labor's prior decision. Accordingly, the applicant is denied.

Dated: Signed at Washington, DC, this 3rd day of January 2002.

Edward A. Tomchick,

Director, Division of Trade Adjustment Assistance.

[FR Doc. 02–2337 Filed 1–30–02; 8:45 am]

BILLING CODE 4510–30–M

DEPARTMENT OF LABOR

Employment and Training Administration

[TA–W–39,703]

Echo Bay Minerals Co., Battle Mountain, NV; Notice of Revised Determination on Reopening

On December 14, 2001, the Department on it's own motion reopened the Department's Negative Determination Regarding Eligibility to Apply for Worker Adjustment Assistance, applicable to the workers of the subject firm.

The initial investigation resulted in a negative determination issued on December 5, 2001, based on the finding that imports of gold dore did not contribute importantly to worker separations at the subject plant. The denial notice was published in the **Federal Register** on December 26, 2001 (66 FR 66428).

The company supplied additional information to help clarify the products produced at the subject site. The company provided data showing that the dominant product produced at the subject site was silver. The silver production accounted for over half of the subject plant's revenues during the relevant period.

An examination of aggregate U.S. imports of silver revealed that silver imports increased significantly during the relevant period. The U.S. import to U.S. shipment ratio for silver was greater than 100 percent during the relevant period.

The workers at Echo Bay Minerals Co., Battle Mountain, Nevada were under an existing trade adjustment assistance certification (TA–W–36,557) through August 5, 2001.

Conclusion

After careful review of the additional facts obtained on reconsideration, I conclude that increased imports of articles like or directly competitive with those produced at Echo Bay Minerals Co., Battle Mountain, Nevada, contributed importantly to the declines in sales or production and to the total or partial separation of workers at the subject firm. In accordance with the provisions of the Act, I make the following certification:

All workers of Echo Bay Minerals Co., Battler Mountain, Nevada who became totally or partially separated from employment on or after August 6, 2001, through two years from the date of this certification, are eligible to apply for adjustment assistance under section 223 of the Trade Act of 1974.

Signed in Washington, DC, this 14th day of Janaury 2002.

Edward A. Tomchick,

Director, Division of Trade Adjustment Assistance.

[FR Doc. 02–2343 Filed 1–29–02; 8:45 am]

BILLING CODE 4510–30–M

DEPARTMENT OF LABOR

Employment and Training Administration

[TRA–W–37,964 and TA–W–37,964B]

Hampton Industries Kinston, NC and New York, NY; Amended Certification Regarding Eligibility To Apply for Worker Adjustment Assistance

In accordance with section 223 of the Trade Act of 1974 (19 U.S.C. 2273) the Department of Labor issued a Notice of Certification Regarding Eligibility to Apply for Worker Adjustment Assistance on October 11, 2000, applicable to workers of Hampton Industries, Kinston, North Carolina. The notice was published in the **Federal Register** on November 1, 2000 (65 FR 65330).

At the request of the petitioners, the Department reviewed the certification for workers of the subject firm. The company reports that worker separations occurred at the New York, New York location of the subject firm. The New York, New York location provided administrative services supporting the production of men's and boy's woven and knit shirts at the Kinston, North Carolina facility of the subject firm.

Based on these findings, the Department is amending the certification to include workers of Hampton Industries, New York, New York.

The intent of the Department's certification is to include all workers of Hampton Industries who were adversely affected by increased imports of men's and boy's woven and knit shirts.

The amended notice applicable to TA–W–37,964 is hereby issued as follows:

All workers of Hampton Industries, Kinston, North Carolina (TA–W–37,964) and Hampton Industries, New York, New York (TA–W–37,964B) who became totally or partially separated from employment on or after July 20, 1999, through October 11, 2002, are eligible to apply for adjustment assistance under Section 223 of the Trade Act of 1974.

Signed at Washington, DC, this 21st day of December, 2001.

Linda G. Poole,

Certifying Officer, Division of Trade Adjustment Assistance.

[FR Doc. 02–2345 Filed 1–30–02; 8:45 am]

BILLING CODE 4510–30–M

DEPARTMENT OF LABOR

Employment and Training Administration

[TA–W–39,826]

Henry Manufacturing, Los Angeles, CA; Notice of Termination of Investigation

Pursuant to Section 221 of the Trade Act of 1974, an investigation was initiated on August 13, 2001, in response to a petition filed on behalf of workers at Henry Manufacturing, Los Angeles, California.

This case is being terminated on the basis that the U.S. Department of Labor was unable to locate an official of the company to obtain the information necessary to render a decision.

Consequently, it would serve no purpose to continue the investigation and the investigation has been terminated.

Signed in Washington, DC, this 16th day of January, 2002.

Linda G. Poole,

Certifying Officer, Division of Trade Adjustment Assistance.

[FR Doc. 02–2325 Filed 1–30–02; 8:45 am]

BILLING CODE 4510–30–M

DEPARTMENT OF LABOR

Employment and Training Administration

Investigations Regarding Certifications of Eligibility To Apply for Worker Adjustment Assistance

Petitions have been filed with the Secretary of labor under section 221(a) of the Trade Act of 1974 (''the Act'') and are identified in the Appendix to this

notice. Upon receipt of these petitions, the Director of the Division of Trade Adjustment Assistance, Employment and Training Administration, has instituted investigations pursuant to section 221(a) of the Act.

The purpose of each of the investigations is to determine whether the workers are eligible to apply for adjustment assistance under Title II, Chapter 2, of the Act. The investigations will further relate, as appropriate, to the determination of the date on which total or partial separations began or threatened to begin and the subdivision of the firm involved.

The petitioners or any other persons showing a substantial interest in the subject matter of the investigations may request a public hearing, provided such request is filed in writing with the Director, Division of Trade Adjustment Assistance, at the address shown below, not later than February 11, 2002.

Interested persons are invited to submit written comments regarding the subject matter of the investigations to the Director, Division of Trade Adjustment Assistance, at the address shown below, not later than February 11, 2002.

The petitions filed in this case are available for inspection at the Office of the Director, Division of Trade Adjustment Assistance, Employment and Training Administration, U.S. Department of Labor, Room C–5311, 200 Constitution Avenue, NW., Washington, DC 20210.

Signed at Washington, DC, this 7th day of January, 2002.

Edward A. Tomchick,

Director, Division of Trade Adjustment Assistance.

APPENDIX

[Petitions Instituted On 01/07/2002]

TA–W	Subject firm (petitioners)	Location	Date of petition	Product(s)
40,526	HMG Intermark Worldwide (Co.)	Reading, PA	10/23/2001	Plastic, Wood and Metal Parts.
40,527	Clearwater Forest (Co.)	Kooskia, ID	11/07/2001	Dimensional Lumber.
40,528	Syst-A-Matic Tool (Co.)	Meadville, PA	10/19/2001	Connector Holders Automobiles.
40,529	L–S Electro-Galvanizing (USWA)	Cleveland, OH	12/03/2001	Electrogalvanizing Steel Coils.
40,530	Adcap-Dunn Manufacturing (Wrks)	Camp Hill, AL	10/29/2001	Advertising Caps.
40,531	Price Pfister (Wrks)	Pacoima, CA	11/09/2001	Machinery Parts to Make Faucets.
40,532	Rich Products (BCTGM)	Appleton, WI	11/01/2001	Spiral and Refrigeration Coils.
40,533	Froedtert Malt (UAW)	Milwaukee, WI	11/14/2001	Supply Malt to Breweries.
40,534	Littleford Day, Inc. (PACE)	Florence, KY	12/24/2001	Mixing Machinery for Food & Chemicals.
40,535	Phoenix Gold Int'l (Wrks)	Portland, OR	12/06/2001	Circuit Boards for Loudspeakers.

[FR Doc. 02–2333 Filed 1–30–02; 8:45 am]

BILLING CODE 4510–30–M

DEPARTMENT OF LABOR

Employment and Training Administration

[TA–W–39,456]

Huck Fasteners, Altoona, PA; Notice of Negative Determination Regarding Application for Reconsideration

By application of August 12, 2001 the Laborers' International Union of North America (L.I.U.N.A.), Local 734 requested administrative reconsideration of the Department's negative determination regarding eligibility for workers and former workers of the subject firm to apply for Trade Adjustment Assistance (TAA). The denial notice was signed on June 29, 2001, and published in the **Federal Register** on July 20, 2001 (66 FR 38026).

Pursuant to 29 CFR 90.18(c) reconsideration may be granted under the following circumstances:

(1) If it appears on the basis of facts not previously considered that the determination complained of was erroneous;

(2) If it appears that the determination complained of was based on a mistake in the determination of facts not previously considered; or

(3) If in the opinion of the Certifying Officer, a misinterpretation of facts or of the law justified reconsideration of the decision.

The petition, filed on behalf of workers at Huck Fasteners, Altoona, Pennsylvania producing cold headed, threaded fasteners, was denied because the ''contributed importantly'' group eligibility requirement of section 222(3) of the Trade Act of 1974, as amended, was not met. The preponderance in the declines in employment at the subject plant is the direct result of all production being transferred to another domestic location. The shift in plant production is attributed to a decision by the company to gain increased profitability through manufacturing efficiency. The investigation further revealed that any fluctuations in plant sales are the direct result of the trend in the production of automobiles for which the subject plant product is produced. The investigation also revealed that the subject company did not import cold headed, threaded fasteners during the relevant period.

The petitioner alleges that the loss of a significant and highly profitable segment of the company's business is due to customers purchasing certain product lines from foreign sources.

An examination of the initial investigation revealed that the firm's fluctuations in sales are minor in relation to the deep layoffs that occurred at the subject plant. Any sales fluctuations are related to reduced demand from the subject firm's major customer base, the automobile industry, which had declining automobile sales during the relevant period. Therefore, imports of products like and directly competitive with that which the subject plant produced did not contribute importantly to the separations at the subject plant.

Based on information acquired from the company during the initial investigation, the preponderance in the declines in employment is related to a decision by the company during the early part of 2001 to shift plant production to an affiliated plant located in Medina, Ohio. The Medina facility produced the same type of products as the Altoona plant. The Altoona plant was a much older facility that lacked expansion potential. The Medina plant had a neighboring building that had significant unused capacity and was well suited for the subject plant's production.

During the initial investigation, management indicated that the shift in production could substantially improve manufacturing efficiency by integrating

the Altoona facility into the Medina, Ohio plant. The company further indicated that the products were similar at both locations, the requisite skills of employees are the same and that it is more efficient to run one larger plant than two smaller plants.

Conclusion

After review of the application and investigative findings, I conclude that there has been no error or misinterpretation of the law or of the facts which would justify reconsideration of the Department of Labor's prior decisions. Accordingly, the application is denied.

Dated: Signed at Washington, DC, this 2nd day of January, 2002.

Edward A. Tomchick,

Director, Division of Trade Adjustment Assistance.

[FR Doc. 02–2340 Filed 1–30–02; 8:45 am]

BILLING CODE 4510–30–M

DEPARTMENT OF LABOR

Employment and Training Administration

[TA–W–39,265 and TA–W–39,265A]

McGinley Mills, Inc., Phillipsburg and Easton, PA; Amended Certification Regarding Eligibility To Apply for Worker Adjustment Assistance

In accordance with section 223 of the Trade Act of 1974 (19 USC 2273) the Department of Labor issued a Notice of Certification Regarding Eligibility to Apply for Worker Adjustment Assistance on September 4, 2001, applicable to workers of McGinley Mills, Inc., Easton, Pennsylvania. The notice was published in the **Federal Register** on September 21, 2001, (66 FR 48707).

At the request of the company, the Department reviewed the certification for workers of the subject firm. The company reports that worker separations occurred at the Phillipsburg, New Jersey location of McGinley Mills, Inc. The Phillipsburg, New Jersey location produces woven greige goods needed for the production of ribbons and ribbon products at the Easton, Pennsylvania location of the subject firm.

Based on these findings, the Department is amending the certification to include workers of the Phillipsburg, New Jersey location of McGinley Mills, Inc.

The intent of the Department's certification is to include all workers of McGinley Mills, Inc. who were adversely affected by increased imports.

The amended notice applicable to TA–W–39,265 is hereby issued as follows:

All workers of McGinley Mills, Inc., Easton, Pennsylvania (TA–W–39,265) and McGinley Mills, Inc., Phillipsburg, New Jersey (TA–W–39,265A) who became totally or partially separated from employment on or after April 26, 2000, through September 4, 2003, are eligible to apply for adjustment assistance under section 223 of the Trade Act of 1974.

Signed at Washington, DC, this 17th day of January, 2002.

Linda G. Poole,

Certifying Officer, Division of Trade Adjustment Assistance.

[FR Doc. 02–2347 Filed 1–30–02; 8:45 am]

BILLING CODE 4510–30–M

DEPARTMENT OF LABOR

Employment and Training Administration

[TA–W–39,380]

Spinnaker Coating Maine Incorporated Westbrook, ME; Notice of Negative Determination Regarding Application for Reconsideration

By application dated September 28, 2001, the PACE International Union, Local 1069 requested administrative reconsideration of the Department's negative determination regarding eligibility to apply for Trade Adjustment Assistance (TAA), applicable to workers and former workers of the subject firm. The denial notice was signed on August 23, 2001, and published in the **Federal Register** on September 11, 2001 (66 FR 47242).

Pursuant to 29 CFR 90.18(c) reconsideration may be granted under the following circumstances:

(1) If it appears on the basis of facts not previously considered that the determination complained of was erroneous;

(2) If it appears that the determination complained of was based on a mistake in the determination of facts not previously considered; or

(3) If in the opinion of the Certifying Officer, a misinterpretation of facts or of the law justified reconsideration of the decision.

The petition for the workers of Spinnaker Coating Maine Co., Westbrook, Maine was denied because the ''contributed importantly'' group eligibility requirement of section 222(3) of the Trade Act of 1974, as amended, was not met. The ''contributed importantly'' test is generally demonstrated through a survey of customers of the workers' firm. The survey revealed that none of the respondents increased their purchases of imported pressure sensitive paper (including EDP, thermal transfer, semi gloss etc.), while decreasing their purchases from the subject firm during the relevant period.

The petitioner believes that the Labor Department looked at the wrong product made by Spinnaker Coating Maine Incorporated.

The Department's decision was based on the correct product (pressure sensitive paper). The Department inadvertently referenced the wrong U.S. import category, pressure sensitive labels (HTS–4821902000). The correct product produced at the company plant is classified under the category pressure sensitive papers (HTS–4811210000). The Department uses import statistics as an indicator, but relies primarily on customer surveys to determine if imports ''contributed importantly'' to the declines in sales and/or production and employment at the subject firm. The Department examined the new data supplied (pressure sensitive paper), but based on other data collected during the initial investigation does not consider the import data as contributing importantly to the workers layoffs, due to the survey responses showing an overwhelming reliance on domestic customer purchases of pressure sensitive papers (including EDP, thermal transfer, semi gloss etc) during the relevant period.

The petitioner also feels that the time period considered in the investigation is not correct.

The Department examined the pertinent time periods of 1999, 2000 and the January through June 2001 over the corresponding 2000 period.

The petitioner further indicates that the Department failed to survey the major customers properly and that a specific customer switched from buying from the subject firm in favor of buying imported thermal transfer pressure sensitive paper (a product similar to what was purchased from the subject firm). That customer stopped buying thermal transfer pressure sensitive paper from the subject firm during February 1999, which is beyond the relevant impact period for this petition and investigation.

The survey, as already indicated, revealed that none of the respondents increased their purchases of imported pressure sensitive papers, (including EDP, thermal transfer, semi gloss etc.) importantly, while decreasing their purchases from the subject firm during the relevant period. The survey further revealed that the overwhelming majority of lost company business was due to customers purchasing products that are

like and directly competitive with what the subject plant produced from other domestic sources and only small amounts of imports (and declining) were purchased during the relevant period.

The petitioner further alleges that they feel declining price is a factor in the company sales declines. Price is not a factor that is considered in meeting the ''contributed importantly'' group eligibility requirement of section 222(3) of the Trade Act of 1974, as amended.

The petitioner also indicates that a foreign producer of products that are like and directly competitive with what the subject firm produces is importing at a lower price and indicates that this is the reason for the plant's problems. Based on the survey results, as already indicated, this is not a major factor contributing to the company's declines in sales, production and employment.

Conclusion

After review of the application and investigative findings, I conclude that there has been no error or misinterpretation of the law or of the facts which would justify reconsideration of the Department of Labor's prior decision. Accordingly, the application is denied.

Signed at Washington, DC, this 26th day of December 2001.

Edward A. Tomchick,

Director, Division of Trade Adjustment Assistance.

[FR Doc. 02–2338 Filed 1–30–02; 8:45 am]

BILLING CODE 4510–30–M

DEPARTMENT OF LABOR

Employment and Training Administration

Investigations Regarding Certifications of Eligibility To Apply for Worker Adjustment Assistance

Petitions have been filed with the Secretary of Labor under section 221(a) of the Trade Act of 1974 (''the Act'') and are identified in the Appendix to this notice. Upon receipt of these petitions, the Director of the Division of Trade Adjustment Assistance, Employment and Training Administration, has instituted investigations pursuant to section 221(a) of the Act.

The purpose of each of the investigations is to determine whether the workers are eligible to apply for adjustment assistance under Title II, Chapter 2, of the Act. The investigations will further relate, as appropriate, to the determination of the date on which total or partial separations began or threatened to begin and the subdivision of the firm involved.

The petitioners or any other persons showing a substantial interest in the subject matter of the investigations may request a public hearing, provided such request is filed in writing with the Director, Division of Trade Adjustment Assistance, at the address shown below, not later than February 11, 2002.

Interested persons are invited to submit written comments regarding the subject matter of the investigations to the Director, Division of Trade Adjustment Assistance, at the address shown below, not later than February 11, 2002.

The petitions filed in this case are available for inspection at the Office of the Director, Division of Trade Adjustment Assistance, Employment and Training Administration, U.S. Department of Labor, Room C–5311, 200 Constitution Avenue, NW., Washington, DC 20210.

Signed at Washington, DC, this 31st day of December, 2001.

Edward A. Tomchick,

Director, Division of Trade Adjustment Assistance.

APPENDIX

[Petitions Instituted on 12/31/2001]

TA–W	Subject firm (petitioners)	Location	Date of petition	Product(s)
40,496	Stanley Furniture Co. (Co.)	West End, NC	12/20/2001	Wood Furniture.
40,497	Lundeen's, Inc. (Wkrs)	North Platte, NE	12/19/2001	Platinum and Palladium.
40,498	Precision Twist Drill (USWA)	Rhinelander, WI	11/20/2001	Twist Drill Bits.
40,499	Swift Spinning Mills (Co.)	Columbus, GA	12/19/2001	Ring Spun Cotton.
40,500	Marubeni Denim (Co.)	Columbus, GA	12/19/2001	Denim Fabric.
40,501	Motorola, Inc. (Wkrs)	Schaumburg, IL	10/31/2001	Telecommunication System Harware.
40,502	Midcom (Co.)	Watertown, SD	12/03/2001	Transformers.
40,503	International Paper (Wkrs)	Menasha, WI	11/13/2001	Silicone Coated Substrate.
40,504	LTV Steel Corp (Wkrs)	East Chicago, IN	12/19/2001	Sheet Steel.
40,505	Tee Tease LLC (Wkrs)	Commerce, CA	10/31/2001	Print T-Shirts.
40,506	Sunrise Medical (Co.)	Oshkosh, WI	10/29/2001	Mobile Lifting Devices.
40,507	Dresser Piping (IAMAW)	Bradford, PA	09/24/2001	Pipeline Products.
40,508	Lexington Home Brands (Co.)	Spruce Pines, NC	10/23/2001	Furniture.
40,509	Tmerys Kaolin (Co.)	Dry Branch, GA	10/24/2001	Kaolin Clay.
40,510	Applied Concepts (Wkrs)	Warrendale, PA	11/14/2001	Hand Tools.
40,511	Lea Wayne Knitting Mills (Wkrs)	Morristown, TN	11/09/2001	Socks/Hosiery.
40,512	Robert Mitchell-Douglas (Co.)	Portland, ME	12/14/2001	Stainless Steel Pipe and Fittings.
40,513	American Power Conversion (Wkrs)	West Warwick, RI	12/12/2001	Power Supplies.
40,514	Senco Products, Inc (Wkrs)	Cincinnati, OH	10/24/2001	Staplers, Nailers, Fasteners.
40,515	IEC Electronics (Wkrs)	Newark, NY	10/04/2001	Assemble Electronic Equipment.
40,516	Bayer Clothing Group (UNITE)	Clearfield, PA	12/04/2001	Men's Tailored Suits.
40,517	Artex International, Inc. (Co.)	Boiling Springs, NC	11/23/2001	Cloth Table Skirting and Napkins.
40,518	Marconi (Wkrs)	Milwaukee, WI	11/06/2001	Telecommunication Cabinets.
40,519	Agilent Technologies (Wkrs)	Liberty Lake, WA	12/03/2001	Electronic Test Equipment.
40,520A	Hoskins Manufacturing Co. (Co.)	Lewiston, MI	11/19/2001	Specialty Alloy Wires.
40,520	Hoskins Manufacturing (Co.)	Mio, MI	11/19/2001	Specialty Alloy Wires.
40,521	Republic Technologies (USWA)	Akron, OH	11/19/2001	Steel Bar.
40,522	Johnson Controls Retail (Wkrs)	Reynoldsburg, OH	11/08/2001	Temperature and Lighting Controls.
40,523	Parallax Power Components (Co.)	Goodland, IN	12/17/2001	Transformers.
40,524	Intermetro Industries (Co.)	Douglas, GA	11/19/2001	Wire Steel Shelving.
40,525	Boeing Company (The) (IAMAW)	Renton, WA	12/18/2001	Commercial Aircraft.

[FR Doc. 02–2334 Filed 1–30–02; 8:45 am]

BILLING CODE 4510–30–M

DEPARTMENT OF LABOR

Employment and Training Administration

[TA–W–39,565C]

Thomaston Mills, Inc. Corporation Office, Thomaston, GA, Including an Employee of Thomaston Mills, Inc. Corporate Office, Thomaston, GA Located in Arlington Heights, IL; Amended Certification Regarding Eligibility To Apply for Worker in Adjustment Assistance

In accordance with Section 223 of the Trade Act of 1974 (19 U.S.C. 2273) the Department of labor issued a Certification of Eligibility to Apply for Worker Adjustment Assistance on November 15, 2001, applicable to workers of Thomaston Mills, Inc., Corporate Office, Thomaston, Georgia. The notice was published in the **Federal Register** on November 30, 2001 (66 FR 59817).

At the request of a petitioner, the Department reviewed the certification for workers of the subject firm. New information shows that a worker separation occurred involving an employee of the Corporate Office, Thomaston, Georgia facility of Thomaston Mills, Inc., located in Arlington Heights, Illinois. This employee was engaged in employment related to the production of sheets, pillowcases and comforters and related accessories at the Corporation Office, Thomaston, Georgia location of the subject firm.

Based on these findings, the Department is amending this certification to include an employee of the Corporate Office of Thomaston Mills, Inc., Thomaston, Georgia, located in Arlington Heights, Illinois.

The intent of the Department's certification is to include all workers of Thomaston Mills, Inc. adversely affected by increased imports.

The amended notice applicable to TA–W–39,565C is hereby issued as follows:

All workers of Thomaston Mills, Inc., Corporate Office, Thomaston, Georgia, including a worker the Corporate Office, Thomaston, Georgia, located in Arlington Heights, Illinois, engaged in employment related to the production of sheets, pillowcases and comforters and related accessories who became totally or partially separated from employment on or after June 20, 2000, through November 15, 2003, are eligible to apply for adjustment assistance under Section 223 of the Trade Act of 1974.

Signed at Washington, DC, this 4th day of January, 2002.

Linda G. Poole,

Certifying Officer, Division of Trade Adjustment Assistance.

[FR Doc. 02–2346 Filed 1–30–02; 8:45 am]

BILLING CODE 4510–30–M

DEPARTMENT OF LABOR

Employment and Training Administration

[NAFTA–5567]

Akers National Roll Hyde Park Foundry Division Hyde Park, PA; Notice of Termination of Investigation

Pursuant to Title V of the North American Free Trade Agreement Implementation Act (Pub. L. 103–182) concerning transitional adjustment assistance, hereinafter called NAFTA–TAA and in accordance with section 250(a), Subchapter 2, Title II, of the Trade Act of 1974, as amended (19 USC 2331), an investigation was initiated on November 20, 2001, in response to a petition filed by a company official on behalf of workers at Akers National Roll, Hyde Park Foundry Division, Hyde Park, Pennsylvania.

The petitioner has requested that the petition be withdrawn. Consequently, further investigation in this case would serve no purpose, and the investigation has been terminated.

Signed in Washington, DC, this 16th day of January, 2002.

Linda G. Poole,

Certifying Officer, Division of Trade Adjustment Assistance.

[FR Doc. 02–2329 Filed 1–30–02; 8:45 am]

BILLING CODE 4510–30–M

DEPARTMENT OF LABOR

Employment and Training Administration

[NAFTA–05323]

Armada, Inc. Leland, NC; Amended Certification Regarding Eligibility To Apply for Worker Adjustment Assistance

In accordance with Section 250(A), Subchapter D, Chapter 2, Title II, of the Trade Act of 1974 (19 USC 2273) the Department of Labor issued a Certification for NAFTA Transitional Adjustment Assistance on October 16, 2001, applicable to workers of Armada, Inc., Zinc Die Cast Department, Secondary Department, Leland, North Carolina. The notice was published in the **Federal Register** on October 30, 2001 (66 FR 54784).

At the request of the company, the Department reviewed the certification for workers of the subject firm. Findings show that the Department limited its certification coverage to workers of the subject firm's Zinc Die Cast Department, the Secondary Department or engaged in employment in support of those Departments.

New company information shows that worker separations occurred and a shift in the production of plastic parts and aluminum die cast parts to Canada is occurring at the subject firm's other manufacturing departments; the Aluminum and Plastic Parts Departments resulting in the entire plant closing in early 2002.

It is the intent of the Department to include ''all workers'' of Armada, Inc. adversely affected by a shift in production of plastic parts and aluminum die cast parts to Canada.

The Department is amending the certification determination to correctly identify the worker group to read ''all workers.''

The amended notice applicable to NAFTA–05323 is hereby issued as follows:

All workers of Armada, Inc., Leland, North Carolina who became totally or partially separated from employment on after September 12, 2000, through October 16, 2003, are eligible to apply for NAFTA–TAA under Section 250 of the Trade Act of 1974.

Signed at Washington, DC, this 17th day of January 2002.

Linda G. Poole,

Certifying Officer, Division of Trade Adjustment Assistance.

[FR Doc. 02–2323 Filed 1–30–02; 8:45 am]

BILLING CODE 4510–30–M

DEPARTMENT OF LABOR

Employment and Training Administration

[NAFTA–05705]

Denso Sales California, Inc., Long Beach, CA; Notice of Termination of Investigation

Pursuant to Title V of the North American Free Trade Agreement Implementation Act (Pub. L. 103–182) concerning transitional adjustment assistance, hereinafter called (NAFTA–TAA), and in accordance with section 250(a), Subchapter D, Chapter 2, Title II, of the Trade Act of 1974, as amended (19 USC 2273), an investigation was initiated on November 10, 2001, in response to a petition filed by a

company official on behalf of workers at Denso Sales California, Inc., Long Beach, California.

The petitioner has requested that the petition be withdrawn. Consequently, further investigation in this case would serve no purpose, and the investigation has been terminated.

Signed at Washington, DC, this 16th day of January, 2002.

Linda G. Poole,

Certifying Officer, Division of Trade Adjustment Assistance.

[FR Doc. 02–2328 Filed 1–30–02; 8:45 am]

BILLING CODE 4510–30–M

DEPARTMENT OF LABOR

Employment and Training Administration

[NAFTA—5694]

King Press Corporation, Joplin, Missouri; Notice of Termination of Investigation

Pursuant to Title V of the North American Free Trade Agreement Implementation Act (Pub. L. 103–182) concerning transitional adjustment assistance, hereinafter called NAFTA–TAA and in accordance with section 350(a), subchapter D, Chapter 2, Title II, of the Trade Act of 1974, as amended (19 USC 2331), an investigation was initiated on December 28, 2001, in response to a worker petition which was filed by the company on behalf of workers at King Press Corporation, Joplin, Missouri.

The petitioner has requested that the petition be withdrawn. Consequently further investigation in this case would serve no purpose, and the investigation has been terminated.

Signed in Washington, DC, this 18th day of January, 2002.

Linda G. Poole,

Certifying Officer, Division of Trade Adjustment Assistance.

[FR Doc. 02–2332 Filed 1–30–02; 8:45 am]

BILLING CODE 4510–30–M

DEPARTMENT OF LABOR

Employment and Training Administration

[NAFTA–04818 and NAFTA–04818A]

McGinley Mills, Inc., Easton, PA and McGinley Mills, Inc., Phillipsburg, NJ; Amended Certification Regarding Eligibility To Apply for NAFTA-Transitional Adjustment Assistance

In accordance with section 250(a), Subchapter D, Chapter 2, Title II, of the Trade Act of 1974, as amended (19 U.S.C. 2273), the Department of Labor issued a Certification of Eligibility to Apply for NAFTA Transitional Adjustment Assistance on September 4, 2001, applicable to workers of McGinley Mills, Inc., Easton, Pennsylvania. The notice was published in the **Federal Register** on September 21, 2001 (66 FR 48707).

At the request of the company, the Department reviewed the certification for workers of the subject firm. The company reports that worker separations occurred at the Phillipsburg, New Jersey location of McGinley Mills, Inc. The Phillipsburg, New Jersey location produces woven greige goods needed for the production of ribbons and ribbon products at the Easton, Pennsylvania location of the subject firm.

Based on these findings, the Department is amending the certification to include workers of the Phillipsburg, New Jersey location of McGinley Mills, Inc.

The intent of the Department's certification is to include all workers of Wesley Industries, Inc. affected by increased imports of ribbons and ribbon products from Mexico.

The amended notice applicable to NAFTA–04818 is hereby issued as follows:

All workers of McGinley Mills, Inc., Easton, Pennsylvania (NAFTA–04818) and McGinley Mills, Inc., Phillipsburg, New Jersey (NAFTA–04818A) who became totally or partially separated from employment on or after April 26, 2000, through September 4, 2003, are eligible to apply for NAFTA–TAA under section 250 of the Trade Act of 1974.

Signed in Washington, DC, this 17th day of January, 2002.

Linda G. Poole,

Certifying Officer, Division of Trade Adjustment Assistance.

[FR Doc. 02–2330 Filed 1–30–02; 8:45 am]

BILLING CODE 4510–30–M

DEPARTMENT OF LABOR

Employment and Training and Administration

[NAFTA–5658]

Perceptron Incorporated, Plymouth, MI; Notice of Termination of Investigation

Pursuant to section 221 of the Trade Act of 1974, an investigation was initiated on December 11, 2001, in response to a worker petition which was filed by a company official on behalf of workers at Perceptron, Incorporated, Plymouth, Michigan.

The petitioner has requested that the petition be withdrawn. Consequently, further investigation in this case would serve no purpose, and the investigation has been terminated.

Signed in Washington, DC, this 18th day of January, 2002.

Linda G. Poole,

Certifying Officer, Division of Trade Adjustment Assistance.

[FR Doc. 02–2331 Filed 1–30–02; 8:45 am]

BILLING CODE 4510–30–M

DEPARTMENT OF LABOR

Employment and Training Administration

[NAFTA–05571 and NAFTA–05571A]

Wesley Industries, Inc. Bloomfield Hills, MI; Wesley Industries, Inc. New Haven Foundry, New Haven, MI; Amended Certification Regarding Eligibility To Apply for NAFTA-Transitional Adjustment Assistance

In accordance with Section 250(a), Subchapter D, Chapter 2, Title II, of the Trade Act of 1974, as amended (19 U.S.C. 2273), the Department of Labor issued a Certification of Eligibility to Apply for NAFTA Transitional Adjustment Assistance on December 31, 2001, applicable to workers of Wesley Industries, Inc., Bloomfield Hills, Michigan. The notice will be published soon in the **Federal Register**.

At the request of the petitioner, the Department reviewed the certification for workers of the subject firm. The company reports that worker separations occurred at the New Haven Foundry, New Haven, Michigan facility of Wesley Industries, Inc. The workers were engaged in the production of automotive engine components: cylinder heads.

The intent of the Department's certification is to include all workers of Wesley Industries, Inc. affected by increased imports of cylinder heads from Canada and Mexico.

Accordingly, the Department is amending the certification to include workers of Wesley Industries, Inc., New Haven Foundry, New Haven, Michigan.

The amended notice applicable to NAFTA–05571 is hereby issued as follows:

All workers of Wesley Industries, Inc., Bloomfield Hills, Michigan (NAFTA–5571) and Wesley Industries, New Haven Foundry, New Haven, Michigan (NAFTA–5571A) who became totally or partially separated from employment on or after November 20, 2000, through December 31, 2003, are eligible to apply for NAFTA–TAA under Section 250 of the Trade Act of 1974.

Signed in Washington, DC this 14th day of January 2002.

Linda G. Poole,

Certifying Officer, Division of Trade Adjustment Assistance.

[FR Doc. 02–2324 Filed 1–30–02; 8:45 am]

BILLING CODE 4510–30–M

LEGAL SERVICES CORPORATION

Notice of Intent To Award—Grant Awards for the Provision of Civil Legal Services to Eligible Low-Income Clients Beginning March 1, 2002

AGENCY: Legal Services Corporation.

ACTION: Announcement of intention to make FY 2002 Competitive Grant Awards.

SUMMARY: The Legal Services Corporation (LSC) hereby announces its intention to award grants and contracts to provide economical and effective delivery of high quality civil legal services to eligible low-income clients, beginning March 1, 2002.

DATES: All comments and recommendations must be received on or before the close of business on March 4, 2002.

ADDRESSES: Legal Services Corporation—Competitive Grants, Legal Services Corporation, 750 First Street NE, 10th Floor, Washington, DC 20002–4250.

FOR FURTHER INFORMATION CONTACT: Reginald Haley, Office of Program Performance, (202) 336–8827.

SUPPLEMENTARY INFORMATION: Pursuant to LSC's announcement of funding availability on Thursday, December 6, 2001, LSC will award funds to one or more of the following organizations to provide civil legal services in the indicated service areas. The grant amounts shown below are based on FY 2002 funding levels and reflect a ten month funding period beginning March 1, 2002 and ending December 31, 2002.

Service area	Applicant name	FY 2002 award
LA–1	Capital Area Legal Services Corporation.	$1,246,370
LA–4	New Orleans Legal Assistance Corporation.	1,740,090
LA–8	Southeast Louisiana Legal Services Corporation.	530,650

These grants and contracts will be awarded under the authority conferred on LSC by the Legal Services Corporation Act, as amended (42 U.S.C. 2996e(a)(1)). Awards will be made so that each service area indicated above is served, although none of the listed organizations are guaranteed an award or contract. This public notice is issued pursuant to the LSC Act (42 U.S.C. 2996f(f)), with a request for comments and recommendations concerning the potential grantees within a period of thirty (30) days from the date of publication of this notice. Grants will become effective and grant funds will be distributed on or about March 1, 2002.

Dated: January 28, 2002.

Michael A. Genz,

Director, Office of Program Performance.

[FR Doc. 02–2410 Filed 1–30–02; 8:45 am]

BILLING CODE 7050–01–P

MORRIS K. UDALL SCHOLARSHIP AND EXCELLENCE IN NATIONAL ENVIRONMENTAL POLICY FOUNDATION

The United States Institute for Environmental Conflict Resolution; Agency Information Collection Activities: Submission for OMB Review; Comment Request; U.S. Institute for Environmental Conflict Resolution Application for Support from the Environmental Conflict Resolution Participation Program

AGENCY: Morris K. Udall Scholarship and Excellence in National Environmental Policy Foundation, U.S. Institute for Environmental Conflict Resolution.

ACTION: Notice.

SUMMARY: In compliance with the Paperwork Reduction Act (44 U.S.C. 3501 *et seq.*) and supporting regulations, this document announces that the U.S. Institute for Environmental Conflict Resolution (the U.S. Institute), part of the Morris K. Udall Foundation, is submitting the following Information Collection Request (ICR) to the Office of Management and Budget (OMB): Application for Support from the Environmental Conflict Resolution Participation Program. The ICR describes the nature of the information collection and its expected burden and cost. This document provides information on the need for the ECR Participation Program, information to be provided by applicants in the application form, and estimates the public burden associated with applying for and documenting activities conducted under the ECR Participation Program. Applications will not be accepted by the U.S. Institute until all Paperwork Reduction Act requirements are fulfilled.

DATES: Comments must be submitted on or before March 4, 2002.

ADDRESSES: Send comments referencing ''ECR-Participation Program'' to the following addresses: David P. Bernard, Associate Director, U.S. Institute for Environmental Conflict Resolution, 110 South Church Avenue, Suite 3350, Tucson, Arizona 85701, and Amy Farrell, Office of Management and Budget, 725 17th Street, N.W., Washington, DC 20503.

FOR FURTHER INFORMATION CONTACT: Please direct comments and requests for information, including copies of the ICR, to: David P. Bernard, Associate Director, U.S. Institute for Environmental Conflict Resolution, 110 South Church Avenue, Suite 3350, Tucson, Arizona 85701, Fax: 520–670–5530; Phone: 520–670–5299; E-mail: *bernard@ecr.gov.*

SUPPLEMENTARY INFORMATION:

A. Title for the Collection of Information

Application for Support from the Environmental Conflict Resolution Participation Program

B. Potentially Affected Persons

State and local governments and agencies, tribes, and non-governmental organizations who may apply to the U.S. Institute for support to initiate multi-party, neutral-led conflict resolution processes on environmental and natural resource issues involving federal agencies or interests.

C. Questions To Consider in Making Comments

The Office of Management and Budget (OMB) requests your comments and responses to any of the following questions related to collecting information as part of the Application for Support from the Environmental Conflict Resolution Participation Program.

1. Is the proposed application process (''collection of information'') necessary for the proper performance of the functions of the agency, including whether the information will have practical utility?

2. Is the agency's estimate of the time spent completing the application (''burden of the proposed collection of information'') accurate, including the validity of the methodology and assumptions used?

3. Can you suggest ways to enhance the quality, utility, and clarity of the information collected?

4. Can you suggest ways to minimize the burden of the information collection on those who are to respond, including through the use of appropriate automated electronic, mechanical, or other technological collection techniques or other forms of information technology?

D. Abstract

The U.S. Institute for Environmental Conflict Resolution plans to collect information in an application form to be submitted by entities and organizations for the purpose of documenting the need for U.S. Institute support, both technical and financial, for specific conflict resolution projects. Through the Environmental Conflict Resolution (ECR) Participation Program, the U.S. Institute will help provide neutral facilitation and convening services, and related participation support, for initiation of agreement-focused environmental conflict resolution processes. State and local governments and agencies, tribes, and non-governmental organizations, may apply for support when needed to create balanced stakeholder involvement processes involving federal agencies or interests.

Responses to the collection of information (the application) are voluntary, but are required to obtain a benefit (financial or technical support from the U.S. Institute.) The U.S. Institute may not conduct or sponsor, and a person is not required to respond to, a collection of information unless it displays a currently valid OMB control number.

Background Information: U.S. Institute for Environmental Conflict Resolution. The U.S. Institute for Environmental Conflict Resolution was created in 1998 by the Environmental Policy and Conflict Resolution Act (P.L. 105–156). The U.S. Institute is located in Tucson, Arizona and is part of the Morris K. Udall Foundation, an independent agency of the executive branch of the federal government. The U.S. Institute's primary purpose is to provide impartial, non-partisan assistance to parties in conflicts involving environmental, natural resources, and public lands issues involving a federal interest. The U.S. Institute provides assistance in seeking agreement or resolving disputes through use of mediation and other collaborative, non-adversarial means.

The Need for and Proposed Use of the Information Collected in the Application for the ECR Participation Program: The ECR Participation Program is designed to achieve several objectives, consistent with the U.S. Institute's mission of promoting resolution of environmental disputes involving federal agencies. The specific objectives for this program are:

- To further the U.S. Institute goal of increasing the use of ECR in environmental, natural resource, and public lands conflicts that involve federal agencies.
- To encourage high quality dispute resolution processes by supporting appropriate use of ECR strategies and appropriate balance among interests involved in the processes.
- To support the ability of all affected parties to participate effectively in ECR processes.

The U.S. Institute conducted an assessment of the need for support to foster participation by all essential parties in ECR efforts early in 2001. The U.S. Institute consulted with representatives of constituencies who would be potential users of this program to ascertain their views of the need for ECR participation support. Representatives of environmental groups, natural resource users, tribes, local and state governments, and ECR practitioners provided information about the specific needs for such a fund and about criteria for eligibility.

The consultative contacts identified the following needs for participation support.

- Many opportunities exist to build consensus on environmental and natural resource issues, but the parties are often unable to do so without neutral, third party assistance.
- State, local, non-governmental, and tribal entities often lack the technical and financial resources to obtain neutral feasibility assessments, ECR process design and facilitation.
- Third party assistance is often required to ensure balanced representation, or a level playing field, for non-governmental, state and local groups, and others who are not paid to participate in environmental negotiations and collaborative processes.
- There is also a need to provide training in interest-based negotiations for those working to overcome serious differences on environmental and natural resource issues.
- A participation support program should be easy to use and accessible to all types of applicants involved in ECR processes, but particularly to groups and situations that would be less likely than others to succeed without it.

Draft Guideline and Sample Application Form

The U.S. Institute has developed guidelines and an application form to gather information about ECR processes for which support was requested. This provides the U.S. Institute with a mechanism for determining if the applicants meet the criteria for receiving support and for targeting support to the most promising ECR efforts (i.e. those likely to produce implementable results through collaboration.) The proposed Guidelines and sample Application form are located on the U.S. Institute's website, at *www.ecr.gov/new.htm#ecr*. It is expected that the ECR Participation Program will be open for applications through March, 31, 2004, roughly two years from approval of the information collection request.

ICR Process

The first Federal Register notice was published on July 24, 2001, (66 (142): 38434–38440). No formal written comments were received. However, several organizations wrote to the U.S. Institute indicating an interest in the program, and asking to be notified when the program begins accepting funding applications.

E. Burden Statement

The annual public reporting and record keeping burden for this collection of information is estimated to average eight hours per response. As used here, burden means the total time, effort, or financial resources expended by persons to generate, maintain, retain, or disclose or provide information to or for a Federal agency. This includes the time needed to review instructions; develop, acquire, install, and utilize technology and systems for the purpose of collecting, validating, and verifying information, processing and maintaining information, and disclosing and providing information and transmitting information.

The Application Form will be available both in hard copy and through the U.S. Institute's web site. It is a two-page list of questions about the proposed ECR effort and the activities that require support. The application includes suggested budget formats, and is designed to allow applicants to attach existing documents and, where possible, reduce the time required for completion of the application. An application can be submitted electronically, through e-mail, and/or in hard copy via fax or mail. The required quarterly progress report form is also included in the application form attached to this submittal.

The Burden calculation includes time for applicants to complete the application form and the time required for the submittal of quarterly reports. It assumes a pool of 15 applicants per

year, and assumes that 10 of the applications will be approved. Quarterly reports would be required only for those ten funded projects. It further assumes an average of four quarterly project reports per project.

Respondent Pool: State agency staff, local government staff, non-governmental organizations, tribal governments, and natural resource user group association staff or members.

Estimated Number of Respondents (per year): 15.

Proposed Frequency of Response: One response per application, plus up to four quarterly progress reports per year.

Respondent Time Burden Estimates:

Time per Response for Initial Application: Eight hours.

Time per Responder for Quarterly Reports: 4 hours per year (1 hour per report).

Total Burden Per Year for Applications: 120 hours for 15 applicants.

Total Burden Per Year for Quarterly Reports: 40 hours for ten projects.

Respondent Cost Burden Estimates (managerial level salary at $55 per hour):

Capital or start-up costs	$0
Cost per Respondent per application	440
Cost per Project for Quarterly Reports	220
Total Annual Cost Burden for 15 Applications	6,600
Total Annual Cost Burden for Quarterly Reports	2,200
Total Annual Cost Burden	8,800
Total Cost Burden, Two Years	17,600

Send comments on the Agency's need for this information, the accuracy of the provided burden estimates, and any suggested methods for minimizing respondent burden, including through use of automated collection techniques to the addresses listed above. Please refer to ECR Participation Program in any correspondence.

(Authority: 20 USC Sec. 5601–5609).

Dated the 25th day of January 2002.

Christopher L. Helms,

Executive Director, Morris K. Udall Foundation.

[FR Doc. 02–2317 Filed 1–30–02; 8:45 am]

BILLING CODE 6820–FN–P

NATIONAL SCIENCE FOUNDATION

Notice of Intent To Seek Approval To Extend and Revise a Current Information Collection

AGENCY: National Science Foundation.

ACTION: Notice and request for comments.

SUMMARY: The National Science Foundation (NSF) is announcing plans to request renewal of this collection. In accordance with the requirement of section 3505(c)(2)(A) of the Paperwork Reduction Act of 1995 (Pub. L. 104–13), we are providing opportunity for public comment on this action. After obtaining and considering public comment, NSF will prepare the submission requesting that OMB approve clearance of this collection for no longer than 3 years.

DATES: Written comments on this notice must be received by April 1, 2002, to be assured of consideration. Comments received after that date will be considered to the extent practicable.

For Additional Information or Comments: Contact Suzanne H. Plimpton, Reports Clearance Officer, National Science Foundation, 4201 Wilson Boulevard, Suite 295, Arlington, Virginia 22230; telephone 703—292—7556; or send email to splimpto@nsf.gov. Individuals who use a telecommunications device for the deaf (TDD) may call the Federal Information Relay Service (FIRS) at 1–800–877–8339 between 8 a.m. and 8 p.m., Eastern time, Monday through Friday. You also may obtain a copy of the date collection instrument and instructions from Ms. Plimpton.

SUPPLEMENTARY INFORMATION:

Title of Collection: Survey of Graduate Students and Postdoctorates in Science and Engineering.

OMB Approval Number: 3145–0062.

Expiration Date of Approval: September 30, 2002.

Type of Request: Intent to seek approval to extend with revision an information collection for three years.

Proposed Project: Graduate students in science, engineering, and health fields in U.S. colleges and universities, by source and mechanism of support and by demographic characteristics. An electronic/mail survey, the Survey of Graduate Students and Postdoctorates in Science and Engineering originated in 1966 and has been conducted annually since 1972. The survey is the academic graduate enrollment component of the NSF statistical program that seeks to ''provide'' a central clearinghouse for the collection, interpretation, and analysis of data on the availability of, and the current and projected need for, scientific and technical resources in the United States, and to provide a source of information for policy formulation by other agencies of the Federal government'' as mandated in the National Science Foundation Act of 1950.

The proposed project will continue the current survey cycle for three to five years. The annual Fall surveys for 2002 through 2006 will survey the universe of approximately 725 reporting units at approximately 600 institutions offering accredited graduate programs in science, engineering, or health. The survey has provided continuity of statistics on graduate school enrollment and support for graduate students in all science & engineering (S&E) and health fields, with separate data requested on demographic characteristics (race/ethnicity and gender by full-time and part-time enrollment status). Statistics from the survey are published in NSF's annual publication series *Graduate Students and Postdoctorates in Science and Engineering, in NSF publication Science and Engineering Indicators, Women, Minorities, and Persons with Disability in Science and Engineering,* and are available electronically on the World Wide Web.

The survey will be sent primarily to the administrators at the Institutional Research Offices. To minimize burden, NSF instituted a Web-based survey in 1998 through which institutions can enter data directly or upload preformatted files. The Web-based survey includes a complete program for editing and trend checking and allows institutions to receive their previous year's data for comparison. Respondents will be encouraged to participate in this Web-based survey should they so wish. Traditional paper questionnaires will also be available, with editing and trend checking performed as part of the survey processing. Overall burden is expected to be reduced from 2002 to 2004 due to expanded use by institutions of the Web-based data collection system.

In Fall 2000, the survey achieved a total response rate of 99.4 percent for institutions and 99.0 percent for departments.

Estimate of Burden: Burden estimates are as follows:

	Total number of institutions	Department	Burden hours
FY 1998	722	11,718	1.83
FY 1999	720	11,833	2.53
FY 2000	717	11,899	2.42

Respondents: Individuals.

Estimated Number of Responses: 11,899 (from the 2000 collection).

Estimated Total Annual Burden on Respondents: 28,796 hours (from the 2000 collection).

Frequency of Responses: Annually.

Comments: Comments are invited on (a) whether the proposed collection of information is necessary for the proper performance of the functions of the Agency, including whether the information shall have practical utility; (b) the accuracy of the Agency's estimate of the burden of the proposed collection of information; (c) ways to enhance the quality, utility, and clarity of the information on respondents; and (d) ways to minimize the burden of the collection of information on those who are to respond, including through the use of appropriate automated, electronic, mechanical, or other technological collection techniques or other forms of information technology.

Dated: January 28, 2002.

Suzanne H. Plimpton,

Reports Clearance Officer, National Science Foundation.

[FR Doc. 02–2416 Filed 1–30–02; 8:45 am]

BILLING CODE 7555–01–M

NUCLEAR REGULATORY COMMISSION

[Docket NO. 50–346]

Firstenergy Nuclear Operating Company, Davis-Besse Nuclear Power Station, Unit 1; Environmental Assessment and Finding of No Significant Impact

The U.S. Nuclear Regulatory Commission (NRC) is considering issuance of an amendment to an existing exemption from title 10 of the Code of Federal Regulations (10 CFR) part 50, section III.G, appendix R, for Facility Operating License No. NPF–3, issued to FirstEnergy Nuclear Operating Company (the licensee), for operation of the Davis-Besse Nuclear Power Station (DBNPS), Unit 1, located in Ottawa County, Ohio. Therefore, as required by 10 CFR 51.21, the NRC is issuing this environmental assessment and finding of no significant impact.

Environmental Assessment

Identification of the Proposed Action

The proposed action would amend an existing exemption concerning certain requirements of Section III.G of Appendix R, ''Fire Protection Program for Nuclear Power Facilities Operating Prior to January 1, 1979.'' Specifically, this amendment to the existing exemption applies to requirements for the DBNPS Component Cooling Water (CCW) Heat Exchanger and Pump Room (Room 328).

The proposed action is in accordance with the licensee's application dated December 21, 2000.

The Need for the Proposed Action

The proposed action is needed because an underlying basis for the existing exemption, namely, the use of fire protection wrap for certain equipment, is no longer necessary due to plant modifications. Section III.G of Appendix R requires, in part, 20 feet of separation between redundant trains of systems necessary for hot shutdown in the same fire area, with no intervening combustibles. Contrary to this requirement, all three CCW pumps for the DBNPS are located at one end of Room 328, and although the redundant CCW pumps are more than 20 feet apart, the third pump, a ''swing'' component, is located between the redundant pumps. The centerline of the swing pump is approximately 11 feet from the centerline of each of the other two pumps. Only one CCW pump is needed for safe shutdown. In order to maintain the remainder of the room in compliance with Appendix R requirements, certain electrical conduits and valves in Room 328 associated with the CCW system were, at the time of the request for the existing exemption, protected against fire to ensure that a fire would not lead to the inoperability of both CCW pumps. Since the issuance of the existing exemption, the necessity of protecting these conduits and valves from fire has evolved to the point where their fire protection wrapping is no longer required in order to ensure safe shutdown.

Environmental Impacts of the Proposed Action

The NRC has completed its evaluation of the proposed action and concludes that the proposed exemption does not involve radioactive wastes, release of radioactive material into the atmosphere, solid radioactive waste, or liquid effluents released to the environment.

The Davis-Besse Nuclear Power Station systems were evaluated in the Final Environmental Statement (FES) dated October 1975 (NUREG 75/097). The proposed exemption will not involve any change in the waste treatment systems described in the FES.

The proposed action will not significantly increase the probability or consequences of accidents, no changes are being made in the types of effluents that may be released off site, and there is no significant increase in occupational or public radiation exposure. Therefore, there are no significant radiological environmental impacts associated with the proposed action.

With regard to potential non-radiological impacts, the proposed action does not have a potential to affect any historic sites. It does not affect non-radiological plant effluents and has no other environmental impact. Therefore, there are no significant non-radiological environmental impacts associated with the proposed action.

Accordingly, the NRC concludes that there are no significant environmental impacts associated with the proposed action.

Environmental Impacts of the Alternatives to the Proposed Action

As an alternative to the proposed action, the staff considered denial of the proposed action (i.e., the ''no-action'' alternative). Denial of the application would result in no change in current environmental impacts. The environmental impacts of the proposed action and the alternative action are similar.

Alternative Use of Resources

The action does not involve the use of any different resource than those previously considered in the Final Environmental Statement for the DBNPS, dated October 1975.

Agencies and Persons Consulted

In accordance with its stated policy, on January 16, 2002, the NRC staff consulted with Ohio State official, C.

O'Claire, Chief, Radiological Branch, Ohio Emergency Management Agency, regarding the environmental impact of the proposed action. The state official had no comments.

Finding of No Significant Impact

On the basis of the environmental assessment, the NRC concludes that the proposed action will not have a significant effect on the quality of the human environment. Accordingly, the NRC has determined not to prepare an environmental impact statement for the proposed action.

For further details with respect to the proposed action, see the licensee's letter dated December 21, 2000. Documents may be examined, and/or copied for a fee, at the NRC's Public Document Room (PDR), located at One White Flint North, 11555 Rockville Pike (first floor), Rockville, Maryland. Publicly available records will be accessible electronically from the ADAMS Public Library component on the NRC Web site, *http://www.nrc.gov* (the Public Electronic Reading Room). Persons who do not have access to ADAMS or who encounter problems in accessing the documents located in ADAMS, should contact the NRC PDR Reference staff by telephone at 1–800–397–4209, or 301–415–4737, or by e-mail at *pdr@nrc.gov.*

Dated at Rockville, Maryland, this 25th day of January 2002.

For the Nuclear Regulatory Commission.

Anthony J. Mendiola,

Chief, Section 2, Project Directorate III, Division of Licensing Project Management, Office of Nuclear Reactor Regulation.

[FR Doc. 02–2375 Filed 1–30–02; 8:45 am]

BILLING CODE 7590–01–P

NUCLEAR REGULATORY COMMISSION

Advisory Committee on Reactor Safeguards; Meeting of the Subcommittee on Plant License Renewal; Notice of Meeting

The ACRS Subcommittee on Plant License Renewal will hold a meeting on March 13, 2002, City Hall, 404 West Palm Drive, Florida City, Florida.

The entire meeting will be open to public attendance.

The agenda for the subject meeting shall be as follows: *Wednesday, March 13, 2002—1:30 p.m. until the conclusion of business.*

The Subcommittee will review the NRC staff's final Safety Evaluation Report related to the license renewal of Turkey Point Nuclear Power Plant Units 3 and 4. The purpose of this meeting is to gather information, analyze relevant issues and facts, and to formulate proposed positions and actions, as appropriate, for deliberation by the full Committee.

Oral statements may be presented by members of the public with the concurrence of the Subcommittee Chairman; written statements will be accepted and made available to the Committee. Electronic recordings will be permitted only during those portions of the meeting that are open to the public, and questions may be asked only by members of the Subcommittee, its consultants, and staff. Persons desiring to make oral statements should notify the Designated Federal Official named below five days prior to the meeting, if possible, so that appropriate arrangements can be made.

During the initial portion of the meeting, the Subcommittee, along with any of its consultants who may be present, may exchange preliminary views regarding matters to be considered during the balance of the meeting.

The Subcommittee will then hear presentations by and hold discussions with representatives of the NRC staff and other interested persons regarding this review.

Further information regarding topics to be discussed, whether the meeting has been canceled or rescheduled, and the Chairman's ruling on requests for the opportunity to present oral statements and the time allotted therefor, can be obtained by contacting the Designated Federal Official, Mr. Noel F. Dudley (telephone 301/415–6888) between 7:30 a.m. and 4:15 p.m. (EST). Persons planning to attend this meeting are urged to contact the above named individual one or two working days prior to the meeting to be advised of any potential changes to the agenda, etc., that may have occurred.

Dated: January 24, 2002.

Sam Duraiswamy,

Acting Associate Director for Technical Support, ACRS/ACNW.

[FR Doc. 02–2374 Filed 1–30–02; 8:45 am]

BILLING CODE 7590–01–P

NUCLEAR REGULATORY COMMISSION

Updated and Consolidated Decommissioning Policy and Guidance of the Nuclear Regulatory Commission's Office of Nuclear Material Safety and Safeguards; Notice of Availability

AGENCY: Nuclear Regulatory Commission.

ACTION: Notice of availability and request for public comment.

SUMMARY: The Nuclear Regulatory Commission's (NRC) Office of Nuclear Material Safety and Safeguards (NMSS) is announcing the availability of a draft document ''Consolidated NMSS Decommissioning Guidance: Decommissioning Process'' (NUREG–1757, Vol. 1), for public comment. This document provides guidance for the planning and implementation of the termination of licenses issued through NMSS's licensing programs. The guidance is intended for NRC staff, licensees, and the public and is being developed in response to the NMSS performance goals, in the NRC's Strategic Plan, of: Making NRC activities and decisions more effective, efficient, and realistic; and reducing unnecessary regulatory burden on stakeholders. NRC is seeking public comment in order to receive feedback from the widest range of interested parties and to ensure that all information relevant to developing the document is available to the NRC staff. This draft document is being issued for comment only and is not intended for interim use. The NRC will review public comments received on the draft document. Suggested changes will be incorporated, where appropriate, in response to those comments, and a final document will be issued for use.

DATES: Comments on this draft document should be submitted by May 1, 2002. Comments received after that date will be considered to the extent practicable.

ADDRESSES: NUREG–1757 is available for inspection and copying for a fee at the Commission's Public Document Room, U.S. NRC's Headquarters Building, 11555 Rockville Pike (First Floor), Rockville, Maryland, and electronically from the ADAMS Electronic Reading Room on the NRC Web site at, *http://www.nrc.gov/reading-rm/adams.html.* NUREG–1757 is also available on the NRC web site at: *http://www.nrc.gov/reading-rm/doc-collections/nuregs/staff* or *http://www.nrc.gov/materials/decommissioning/regs-guides-comm.html.*

A free single copy of NUREG–1757 will be available to interested parties until the supply is exhausted. Such copies may be requested by writing to the U.S. Nuclear Regulatory Commission, Distribution Services, Washington, DC 20555–0001 or submitting e-mail to *distribution@nrc.gov.*

Members of the public are invited and encouraged to submit written comments to: Jack D. Parrott, Project Scientist, Office of Nuclear Material Safety and Safeguards, Mail Stop T–7F27, U.S. Nuclear Regulatory Commission, Washington, DC 20555–0001. Hand-deliver comments to: 11555 Rockville Pike, Rockville, MD, between 7:30 a.m. and 4:15 p.m., Federal workdays. Comments may also be sent electronically to *decomcomments@nrc.gov.* Copies of comments received may be examined at the ADAMS Electronic Reading Room on the NRC Web site, and the NRC Public Document Room, 11555 Rockville Pike, Room O–1F21, Rockville, MD 20852. The NRC Public Document Room is open from 7:45 a.m. to 4:15 p.m., Monday through Friday, except on Federal holidays.

FOR FURTHER INFORMATION CONTACT: Jack D. Parrott, Mail Stop T–7F27, U.S. Nuclear Regulatory Commission, Washington, DC 20555–0001. Telephone: (301) 415–6700; Internet: *jdp1@nrc.gov.*

SUPPLEMENTARY INFORMATION: As part of its redesign of the materials license program, the NRC's Office of Nuclear Material Safety and Safeguards (NMSS) is consolidating and updating numerous decommissioning guidance documents into a three-volume NUREG. The three volumes are as follows: (1) The General Materials Decommissioning Process; (2) Characterization, Survey, and Determination of Radiological Criteria; and (3) Financial Assurance, Recordkeeping, and Timeliness. Volume 1 of this NUREG series, entitled ''Consolidated NMSS Decommissioning Guidance: Decommissioning Process,'' is the first of these three volumes and is intended for use by licensees and NRC staff.

The approaches to license termination described in this NUREG will help to identify the information (subject matter and level of detail) needed to terminate a license by considering the specific circumstances of the wide range of radioactive materials users licensed by NRC. This guidance takes a risk-informed, performance-based approach to the information needed to support an application for the termination of a materials license. When published as a final report, this guidance should be used by licensees in preparing license amendment requests. NRC staff will use the final guidance in reviewing these amendment requests.

Draft NUREG–1757, Volume 1, ''Consolidated NMSS Decommissioning Guidance: Decommissioning Process,'' is the first of three volumes on decommissioning guidance. When final, it is intended for use by applicants, licensees, NRC license reviewers, and other NRC personnel. This document updates and builds upon the risk-informed approach in, and in whole or in part incorporates the NMSS Decommissioning Handbook (NUREG/BR–0241, ''NMSS Handbook for Decommissioning Fuel Cycle and Materials Facilities,'' March 1997). This draft NUREG also incorporates the parts of the ''NMSS Decommissioning Standard Review Plan,'' NUREG–1727, September 2000, that provide guidance for developing those parts of a decommissioning plan addressing general site description and current radiological conditions; decommissioning activities, management, and quality assurance; and modifications to decommissioning programs and procedures.

The policies and procedures discussed in draft NUREG–1757, Volume 1, will be used by NRC staff overseeing the decommissioning program at licensed fuel cycle, fuel storage, and materials sites to evaluate a licensee's decommissioning actions. This draft NUREG also describes, and make available to the public, methods acceptable to the NRC staff in implementing specific parts of the Commission's regulations, to delineate techniques and criteria used by the staff in evaluating decommissioning actions, and to provide guidance to licensees responsible for decommissioning NRC-licensed sites. This NUREG will not substitute for regulations, and compliance with it will not be required. Methods and solutions different from those in this NUREG will be acceptable, if they provide a basis for concluding that the decommissioning actions are in compliance with the Commission's regulations. Other NRC licensees, e.g. nuclear reactors or uranium recovery facilities, may find this information useful, but they are not the subject of this NUREG.

Further information on the overall decommissioning guidance consolidation and updating project can be found in the **Federal Register** Notice publishing the plan for the project (66 FR 21793).

Commentors are encouraged to submit their written comments to the addresses listed above. To ensure efficient and complete comment resolution, commentors are requested to reference the page number and the line number of the document to which the comment applies if possible.

Dated at Rockville, MD, this 23rd day of January, 2002.

For the Nuclear Regulatory Commission.

Larry W. Camper,

Chief, Decommissioning Branch, Division of Waste Management, Office of Nuclear Material Safety and Safeguards.

[FR Doc. 02–2376 Filed 1–30–02; 8:45 am]

BILLING CODE 7590–01–P

SECURITIES AND EXCHANGE COMMISSION

[Release No. IC–25401]

Notice of Applications for Deregistration Under Section 8(f) of the Investment Company Act of 1940

January 25, 2002.

The following is a notice of applications for deregistration under section 8(f) of the Investment Company Act of 1940 for the month of January, 2002. A copy of each application may be obtained for a fee at the SEC's Public Reference Branch, 450 Fifth St., NW, Washington, DC 20549–0102 (tel. 202–942–8090). An order granting each application will be issued unless the SEC orders a hearing. Interested persons may request a hearing on any application by writing to the SEC's Secretary at the address below and serving the relevant applicant with a copy of the request, personally or by mail. Hearing requests should be received by the SEC by 5:30 p.m. on February 19, 2002, and should be accompanied by proof of service on the applicant, in the form of an affidavit or, for lawyers, a certificate of service. Hearing requests should state the nature of the writer's interest, the reason for the request, and the issues contested. Persons who wish to be notified of a hearing may request notification by writing to the Secretary, SEC, 450 Fifth Street, NW, Washington, DC 20549–0609. For Further Information Contact: Diane L. Titus, at (202) 942–0564, SEC, Division of Investment Management, Office of Investment Company Regulation, 450 Fifth Street, NW, Washington, DC 20549–0506.

PaineWebber Mutual Fund Trust [File No. 811–4312]

Summary: Applicant seeks an order declaring that it has ceased to be an investment company. On February 23, 2001, applicant's series, PaineWebber National Tax-Free Income Fund, transferred its assets to PACE Municipal Fixed Income Investments, a series of PACE Select Advisors Trust, based on net asset value. On March 9, 2001, applicant's remaining series, PaineWebber California Tax-Free Income Fund, transferred its assets to

MFS California Municipal Bond Fund, a series of MFS Municipal Series Trust, based on net asset value. Expenses of $214,588 incurred in connection with the reorganization were paid by Brinson Advisors, Inc., applicant's investment adviser.

Filing Date: The application was filed on January 7, 2002.

Applicant's Address: 51 West 52nd St., New York, NY 10019–6114.

PaineWebber Municipal Series [File No. 811–5014]

Summary: Applicant seeks an order declaring that it has ceased to be an investment company. On March 9, 2001, applicant transferred its assets to MFS Municipal Bond Fund, a series of MFS Municipal Series Trust, and MFS Municipal High Income Fund, a series of MFS Series Trust III, based on net asset value. Expenses of $82,287 incurred in connection with the reorganization were paid by Brinson Advisors, Inc., applicant's investment adviser.

Filing Date: The application was filed on January 7, 2002.

Applicant's Address: 51 West 52nd Street, New York, NY 10019–6114.

MaxFund Trust [File No. 811–8499]

Summary: Applicant seeks an order declaring that it has ceased to be an investment company. On August 13, 2001, one of applicant's portfolios, Fifth Third/Maxus Aggressive Value Fund, transferred its assets to Fifth Third Microcap Value Fund, a portfolio of Fifth Third Funds, based on net asset value. On October 1, 2001, applicant's remaining portfolio, Fifth Third/Maxus Ohio Heartland Fund made a liquidating distribution to its shareholders based on net asset value. Applicant incurred no expenses in connection with either the reorganization or liquidation.

Filing Date: The application was filed on December 4, 2001.

Applicant's Address: 1404 East Ninth St., Fifth Floor, Cleveland, OH 44114.

Fifth Third/Maxus Income Fund [File No. 811–4144]

Fifth Third/Maxus Equity Fund [File No. 811–5865]

Fifth Third/Maxus Laureate Fund [File No. 811–7516]

Summary: Each applicant seeks an order declaring that it has ceased to be an investment company. By October 23, 2001, each applicant transferred its assets to a portfolio of Fifth Third Funds, based on net asset value. Fifth Third Bank, an affiliate of applicants' investment adviser, paid all expenses incurred in connection with the reorganizations.

Filing Date: The applications were filed on December 4, 2001. Fifth Third/Maxus Income Fund filed an amended application on December 10, 2001.

Applicants' Address: 1404 East Ninth St., Fifth Floor, Cleveland, OH 44114.

Arrow Funds [File No. 811–7041]

Summary: Applicant seeks an order declaring that it has ceased to be an investment company. On November 14, 1997, applicant transferred its assets to The Arch Funds, Inc., based on net asset value. Expenses of approximately $20,000 incurred in connection with the reorganization were paid by applicant and the acquiring fund.

Filing Date: The application was filed on January 2, 2002.

Applicant's Address: 1001 Liberty Ave., Pittsburgh, PA 15222.

COUNTRY Growth Fund, Inc. [File No. 811–1338]

COUNTRY Tax Exempt Bond Fund, Inc. [File No. 811–2840]

COUNTRY Taxable Fixed Income Series Fund, Inc. [File No. 811–3186]

Summary: Each applicant seeks an order declaring that it has ceased to be an investment company. On October 31, 2001, each applicant transferred its assets to COUNTRY Mutual Funds Trust based on net asset value. Expenses of $26,261, $9,481 and $7,810, respectively, incurred in connection with the reorganizations were paid by COUNTRY Trust Bank, investment adviser to each applicant.

Filing Date: The applications were filed on December 21, 2001.

Applicants' Address: 808 IAA Dr., Bloomington, IL 61702–2901.

PaineWebber America Fund [File No. 811–3502]

PaineWebber Olympus Fund [File No. 811–4180]

PaineWebber Managed Assets Trust [File No. 811–6376]

PaineWebber Securities Trust [File No. 811–7473]

PaineWebber Investment Trust II [File No. 811–7104]

Summary: Each applicant seeks an order declaring that it has ceased to be an investment company. By February 23, 2001, each applicant had transferred its assets to a corresponding series of PaineWebber PACE Select Advisors Trust based on net asset value. Expenses of $243,347, $171,183, $130,421, $253,868 and $90,272, respectively, incurred in connection with the reorganizations were paid by Brinson Advisors, Inc., investment adviser to each applicant.

Filing Dates: The applications were filed on December 19, 2001, except PaineWebber Investment Trust II, which was filed on December 21, 2001.

Applicants' Address: 51 West 52nd St., New York, NY 10019–6114.

Nationwide Asset Allocation Trust [File No. 811–7805]

Summary: Applicant seeks an order declaring that it has ceased to be an investment company. On July 20, 2001, applicant made a liquidating distribution to its shareholders based on net asset value. Expenses of $2,901 incurred in connection with the liquidation were paid by Villanova SA Capital Trust, applicant's investment adviser.

Filing Date: The application was filed on December 11, 2001.

Applicant's Address: Three Nationwide Plaza, Columbus, OH 43215.

Bonfiglio & Reed Options Fund [File No. 811–9905]

Summary: Applicant seeks an order declaring that it has ceased to be an investment company. On January 29, 2001, applicant made a final liquidating distribution to its shareholders based on net asset value. Expenses of $50 incurred in connection with the liquidation were paid by Bonfiglio & Reed LLC, applicant's investment adviser.

Filing Dates: The application was filed on September 26, 2001, and amended on January 7, 2002.

Applicant's Address: P.O.Box 2256, Tempe, AZ 82580–2256.

Credit Suisse Asset Management Strategic Global Income Fund, Inc. [File No. 811–5458]

Summary: Applicant, a closed-end investment company, seeks an order declaring that it has ceased to be an investment company. On May 14, 2001, applicant transferred its assets to Credit Suisse Asset Management Income Fund, Inc. based on net asset value. Expenses of $694,820 incurred in connection with the reorganization were shared equally between applicant and the acquiring fund.

Filing Dates: The application was filed on June 22, 2001, and amended on December 28, 2001.

Applicant's Address: 466 Lexington Ave., 16th Floor, New York, NY 10017.

For the Commission, by the Division of Investment Management, pursuant to delegated authority.

J. Lynn Taylor,

Assistant Secretary.

[FR Doc. 02–2372 Filed 1–30–02; 8:45 am]

BILLING CODE 8010–01–P

SECURITIES AND EXCHANGE COMMISSION

[Release No. 34–45334; File No. SR–Amex–2001–111]

Self-Regulatory Organizations; Notice of Filing and Immediate Effectiveness of Proposed Rule Change by the American Stock Exchange LLC Regarding Off-Exchange Trading in Exchange Listed Options

January 25, 2002.

Pursuant to section 19(b)(1) of the Securities Exchange Act of 1934 (''Act''),[1] and Rule 19b–4 [2] thereunder, notice is hereby given that on December 26, 2001, the American Stock Exchange LLC (''Amex'' or ''Exchange'') filed with the Securities and Exchange Commission (''Commission'') the proposed rule change as described in Items I, II, and III below, which Items have been prepared by the Exchange. The Commission is publishing this notice to solicit comments on the proposed rule change from interested persons.

I. Self-Regulatory Organization's Statement of the Terms of Substance of the Proposed Rule Change

The Exchange proposes to amend Exchange Rule 959 to reinstate text inadvertently deleted that allows certain trading in Exchange listed options contracts to occur off the Exchange.

The text of the proposed rule change appears below. New text is in italics; deletions are in brackets.

Rule 959. Accommodation Transactions

(a) No Change.

(b) *Any member, member organization or other person who is a non-member broker or dealer and who directly or indirectly controls, is controlled by, or is under common control with, a member, member organization (any such other person referred to as an affiliated person) may effect any transaction as principal in the over-the-counter market in any class of option contracts listed on the Exchange for a premium not in excess of $1.00 per contract.*

Commentary.....

For each transaction executed by a member organization or affiliated person pursuant to paragraph (b), a record of such transaction shall be maintained by the member or member organization and shall be available for inspection by the Exchange for a period of three years. Such record shall include the circumstances under which the transaction was executed in conformity with this rule.

II. Self-Regulatory Organization's Statement of the Purpose of, and Statutory Basis for, the Proposed Rule Change

In its filing with the Commission, the Exchange included statements concerning the purpose of and basis for the proposed rule change and discussed any comments it received on the proposed rule change. The text of these statements may be examined at the places specified in Item IV below. The Exchange has prepared summaries, set forth in sections A, B, and C below, of the most significant aspects of such statements.

A. Self-Regulatory Organization's Statement of the Purpose of, and Statutory Basis for, the Proposed Rule Change

(1) Purpose

On February 1, 2000, the Exchange filed with the Commission pursuant to Rule 19b–4 of the Act,[3] a proposed rule change to rescind its off-board trading rules (Exchange Rules 5 and 6) and to make conforming changes to Rules 25, 317, 900 and 959.[4] The Commission subsequently approved the proposed rule change on June 1, 2000.[5] According to the Exchange, rather than simply deleting the reference to Exchange Rule 5 in paragraph (b) of Rule 959, paragraph (b) was inadvertently deleted in its entirety. Exchange Rule 959(b) concerned the ability of Exchange members to effect transactions in the over-the-counter market in options. The provision required that options premiums not exceed $1.00 per contract for any class of options listed on the Exchange.

Rule 19c–3(a) of the Act [6] prohibits a national securities exchange from imposing off-board trading restrictions on equity securities listed after April 26, 1979. In 2000, the New York Stock Exchange Inc. proposed the elimination of its off-board equity trading restrictions by filing with the Commission to rescind NYSE Rule 390. Amex and the other national securities exchanges then filed proposed rule changes with the Commission to eliminate off-board trading restrictions by their members. The Commission approved these proposals to eliminate off-board trading restrictions. However, as indicated in Rule 19c–3(a) of the Act, off-board trading restrictions by members of the national securities exchanges may still apply to options contracts issued by the Options Clearing Corporation (''OCC''). Therefore, because listed options issued and cleared by OCC are required to be transacted on an Exchange,[7] the elimination of Exchange Rule 959(b) to allow limited over-the-counter transaction in the market by members was not proper. Exchange Rule 959(b) will allow members to effect transactions in options contracts as principals in the over-the-counter market for a premium not in excess of $1.00 per contract. The Commentary to Exchange Rule 959 will require that for each over-the-counter transaction, the member, member organization, or affiliated person, maintain a record of such transaction and keep such records available for Exchange inspection for three years.

Other options exchanges, such as the Chicago Board Options Exchange, Inc. (''CBOE''), the Pacific Stock Exchange, Inc. (''PCX'') and the Philadelphia Stock Exchange, Inc. (''Phlx'') permit transactions in the over-the-counter market under the same restrictions.[8] At the time when off-board trading restrictions for equity securities were lifted in June 2000, the other options exchanges did not similarly revise their rules to delete reference to over-the-counter transactions.

(2) Statutory Basis

The Exchange believes that the proposed rule change is consistent with section 6(b) of the Act [9] in general and furthers the objectives of Section 6(b)(5) [10] in particular in that it is designed to prevent fraudulent and manipulative acts and practices, to promote just and equitable principles of trade, to foster cooperation and coordination with persons engaged in facilitating transactions in securities, to remove impediments to and perfect the mechanism of a free and open market

[1] 15 U.S.C. 78s(b)(1).

[2] 17 CFR 240.19b–4.

[3] 17 CFR 240.19b–4.

[4] *See* Securities Exchange Act Release No. 42460 (February 25, 2000), 65 FR 11618 (March 3, 2000).

[5] Securities Exchange Act Release No. 42888 (June 1, 2000), 65 FR 36855 (June 12, 2000).

[6] 17 CFR 240.19c(3)(a).

[7] *See* OCC By-Laws Article VI Section 1.

[8] *See* CBOE Rule 6.49, PCX Rule 6.78, and Phlx Rule 1059.

[9] 15 U.S.C. 78f(b).

[10] 15 U.S.C. 78f(b)(5).

and a national market system, to protect investors and the public interest, and is not designed to permit unfair discrimination between customers, issuers, brokers and dealers.

B. Self-Regulatory Organization's Statement on Burden on Competition

The Exchange believes that the proposed rule change will impose no burden on competition.

C. Self-Regulatory Organization's Statement on Comments on the Proposed Rule Change Received From Members, Participants, or Others

No written comments were solicited or received with respect to the proposed rule change.

III. Date of Effectiveness of the Proposed Rule Change and Timing for Commission Action

The foregoing rule change has become effective pursuant to section 19(b)(3)(A)(iii) of the Act [11] and Rule 19b–4(f)(3) [12] thereunder because the Exchange has designated it as concerned solely with the administration of the Exchange. At any time within 60 days of the filing of such proposed rule change, the Commission may summarily abrogate such rule change if it appears to the Commission that such action is necessary or appropriate in the public interest, for the protection of investors, or otherwise in furtherance of the purposes of the Act.

IV. Solicitation of Comments

Interested persons are invited to submit written data, views and arguments concerning the foregoing, including whether the proposed rule change is consistent with the Act. Persons making written submissions should file six copies thereof with the Secretary, Securities and Exchange Commission, 450 Fifth Street, NW., Washington, DC 20549–0609. Copies of the submission, all subsequent amendments, all written statements with respect to the proposed rule change that are filed with the Commission, and all written communications relating to the proposed rule change between the Commission and any person, other than those that may be withheld from the public in accordance with the provisions of 5 U.S.C. 552, will be available for inspection and copying in the Commission's Public Reference Room. Copies of such filing will also be available for inspection and copying at the principal office of the Amex. All submissions should refer to File No. SR–Amex–2001–111 and should be submitted by February 21, 2002.

For the Commission, by the Division of Market Regulation, pursuant to delegated authority.[13]

Margaret H. McFarland,

Deputy Secretary.

[FR Doc. 02–2370 Filed 1–30–02; 8:45 am]

BILLING CODE 8010–01–P

[11] 15 U.S.C. 78s(b)(3)(A)(iii).

[12] 17 CFR 240.19–4(f)(3).

[13] 17 CFR 200.30–3(a)(12).

SECURITIES AND EXCHANGE COMMISSION

[Release No. 34–45335; File No. SR–GSCC–2001–03]

Self-Regulatory Organizations; Government Securities Clearing Corporation; Order Approving Proposed Rule Change Relating to Establishment of a Cross-Margining Agreement With the Board of Trade Clearing Corporation

January 25, 2002.

I. Introduction

On April 4, 2001, the Government Securities Clearing Corporation (''GSCC'') filed with the Securities and Exchange Commission (''Commission'') proposed rule change SR–GSCC–2001–03 pursuant to section 19(b)(1) of the Securities Exchange Act of 1934 (''Act'').[1] Notice of the proposal was published in the **Federal Register** on September 11, 2001.[2] No comment letters were received. For the reasons discussed below, the Commission is approving the proposed rule change.

II. Description [3]

On August 19, 1999, the Commission approved GSCC's proposed rule filing to establish a cross-margining program with other clearing organizations and to begin its program with the New York Clearing Corporation (''NYCC'').[4] More recently, the Commission approved GSCC's proposed rule filing to establish a similar cross-margining program with the Chicago Mercantile Exchange (''CME'').[5] GSCC is now establishing a similar cross-margining arrangement with the Board of Trade Clearing Corporation.[6]

This development is significant because the Chicago Board of Trade, for which BOTCC clears, is by far the largest Treasury futures exchange market, and certain of its products, such as the 10-Year Note futures contract, which will be cross-margined with GSCC products, continue to experience growth in volume. Thus, establishing the cross-margining program between GSCC and BOTCC has the potential to provide significant collateral savings to the industry in general and to GSCC's and BOTCC's common members in particular. From each clearing organization's perspective, the cross-margining program will provide important risk management benefits. These benefits include such things as providing the clearing organizations with more information concerning members' intermarket positions to enable the clearing organizations to make more accurate decisions regarding the true risk of the positions to the clearing organizations and encouraging coordinated liquidation processes for a joint participant, or a participant and its affiliate, in the event of an insolvency.[7]

A. GSCC's Cross-Margining Program

GSCC believes that the most efficient and appropriate approach for establishing cross-margining programs for fixed-income and other interest rate products is to do so on a multilateral basis with GSCC as the ''hub.'' Each clearing organization that participates in a cross-margining program with GSCC, such as NYCC, CME, and now BOTCC, (hereinafter ''Participating CO'') enters into a separate cross-margining agreement between itself and GSCC. Each of the agreements will have similar terms and no preference will be given by GSCC to one Participating CO over another.

Cross-margining is available to any GSCC netting member (with the exception of inter-dealer broker netting

[1] 15 U.S.C. 78s(b)(1).

[2] Securities Exchange Act Release No. 44766 (September 5, 2001), 66 FR 47251.

[3] The description of GSCC's cross-margining program is drawn largely from representations made by GSCC.

[4] Securities Exchange Act Release No. 41766 (August 19, 1999), 64 FR 46737 (August 26, 1999) [File No. SR–GSCC–98–04]. The requisite rule changes necessary for GSCC to engage in cross-margining programs with other clearing organizations were made in the NYCC cross-margining rule filing.

[5] Securities Exchange Act Release No. 44301 (May 11, 2001), 66 FR 28207 (May 22, 2001) [File No. SR–GSCC–00–13]. In addition to approving GSCC's cross-margining program with the CME, the order granted approval to change GSCC Rule 22, Section 4, to clarify that before GSCC credits an insolvent member for any profit realized on the liquidation of the member's final net settlement positions, GSCC will fulfill its obligations with respect to that member under cross-margining agreements.

[6] BOTCC is a Delaware corporation that acts as the clearing organization for certain futures contracts and options on futures contracts that are traded on the Chicago Board of Trade and that are regulated by the Commodity Futures Trading Commission.

[7] The GSCC–BOTCC cross-margining agreement requires ownership of 50 percent or more of the common stock of an entity to indicate control of the entity for purposes of the definition of ''affiliate.''

members) that is, or that has an affiliate that is, a member of a Participating CO. Any such member (or pair of affiliated members) may elect to have its margin requirements at both clearing organizations calculated based upon the net risk of its cash and repo positions at GSCC and of its offsetting and correlated positions in related contracts carried at the Participating CO. Cross-margining is intended to lower the cross-margining participant's (or pair of affiliated members') overall margin requirement. The GSCC member (and its affiliate, if applicable) will sign an agreement under which it (or they) agree to be bound by the cross-margining agreement between GSCC and the Participating CO and which allows GSCC or the Participating CO to apply the member's (or its affiliate's) margin collateral to satisfy any obligation of GSCC to the Participating CO (or vice versa) that results from a default of the member (or its affiliate).

Margining based on the net combined risk of correlated positions is based on an arrangement under which GSCC and each Participating CO agree to accept the correlated positions in lieu of supporting collateral. Under this arrangement, each clearing organization holds and manages its own positions and collateral and independently determines the amount of margin that it will make available for cross-margining, referred to as the ''residual margin amount.''

GSCC computes the amount by which the cross-margining participant's margin requirement can be reduced at each clearing organization by comparing the participant's positions and the related margin requirements at GSCC as against those at each Participating CO. GSCC offsets each cross-margining participant's residual margin amount at GSCC against the offsetting residual margin amounts of the participant (or its affiliate) at each Participating CO.[8] If, within a given pair of offset classes, the margin that GSCC has available for a participant is greater than the combined margin submitted by the Participating COs, GSCC will allocate a portion of its margin equal to the combined margin at the Participating COs. If, within a given pair of offset classes, the combined margin submitted by the Participating COs is greater than the margin that GSCC has available for that participant, GSCC will first allocate its margin to the Participating CO with the most highly correlated position. If, within a given pair of offset classes, the positions are equally correlated, GSCC will allocate pro rata based upon the residual margin amount available at each Participating CO. GSCC and each Participating CO may then reduce the amount of collateral that they collect to reflect the offsets between the cross-margining participant's positions at GSCC and its (or its affiliate's) positions at the Participating CO.[9] In the event of the default and liquidation of a cross-margining participant, the loss sharing between GSCC and each of the Participating COs will be based upon the foregoing allocations and the cross-margin reduction.

GSCC will guarantee the cross-margining participant's (or its affiliate's) performance to each Participating CO up to a specified maximum amount based on the loss sharing formula contained in the Cross-Margining Agreement. Each Participating CO will provide the same guaranty to GSCC. The amount of the guarantee is the lowest of: (1) The cross-margin loss of the worse off party; (2) the higher of the cross-margin reduction or the cross-margin gain of the better off party; (3) the amount required to equalize the parties' cross-margin results; or (4) the amount by which the cross-margining reduction exceeds the better off party's cross-margin loss if both parties have cross-margin losses.

B. Information Specific to the Current Agreement Between GSCC and BOTCC

1. *Participation in the cross-margining program*: Any netting member of GSCC other than an inter-dealer broker will be eligible to participate.[10] Any clearing member of BOTCC will be eligible to participate.

2. *Products subject to cross-margining*: The products that will be eligible for the GSCC–BOTCC cross-margining arrangement are the Treasury securities with certain remaining maturities that fall into GSCC's Offset Classes C, E, F, and G as defined in GSCC's Rules that are cleared by GSCC and the 2-Year Note, 5-Year Note, 10-Year Note, and U.S. Treasury Bond futures contracts and options on these futures contracts that are cleared by BOTCC.[11] All eligible positions maintained by a cross-margining participant in its account at GSCC and in its (or its affiliate's) proprietary account at BOTCC will be eligible for cross-margining.[12] Initially, as a conservative measure, residual margin amounts will be applied only within the same offset class (*e.g.*, the 2-Year Note against the 2-Year Note future). An appropriate disallowance factor[13] based on correlation studies and a minimum margin factor[14] will be applied.[15]

3. *Margin Rates*: GSCC and BOTCC currently use different margin rates to establish margin requirements for their respective products. Margin reductions in the GSCC–BOTCC cross-margining arrangement will always be computed based on the lower of the applicable margin rates. This methodology results in a potentially lesser benefit to the participant but ensures a more conservative result (*i.e.*, more collateral held at the clearing organization) for both GSCC and the Participating COs.

4. *Daily Procedures*: On each business day, it is expected that BOTCC will inform GSCC of the residual margin amounts it is making available for cross-margining by approximately 11 p.m. New York time. GSCC will inform BOTCC by approximately 1 a.m. New York time how much of these residual margin amounts it will use. Reductions as computed will be reflected in the daily clearing fund calculation.

C. Benefits of Cross-Margining

GSCC believes that its cross-margining program enhances the safety

[8] The residual margin amount is the long margin amount or the short margin amount in each offset class that is available for cross-margining after all internal offsets are conducted within and between offset classes at a particular clearing organization.

[9] GSCC and each Participating CO unilaterally have the right not to reduce a participant's margin requirement by the cross-margin reduction or to reduce it by less than the cross-margin reduction. However, the clearing organizations may not reduce a participant's margin requirement by more than the cross-margin reduction.

[10] Because inter-dealer brokers should not and generally do not have positions at GSCC at the end of the day, they should have no margin requirement to be reduced.

[11] Non-mortgage backed agency securities will be added at a later date. GCF Repo products will not be included in the arrangement. GSCC will notify the Commission when additional securities and futures are added to the cross-margining program.

[12] The GSCC–BOTCC cross-margining arrangement will be applicable on the futures side only to positions in a proprietary account of a cross-margining participant at BOTCC. The arrangement will not apply to positions in a customer account at BOTCC that would be subject to segregation requirements under the Commodity Exchange Act. This is also the case with respect to the arrangements with NYCC and the CME.

[13] The disallowance factor is the haircut reflective of the correlation analysis done by GSCC for each offset class.

[14] The minimum margin factor is the contractually agreed upon cap on the amount of the margin reduction that the clearing organizations will allow. (In some of the documents submitted by GSCC, the minimum margin factor is referred to as the minimum disallowance factor.) Initially, the GSCC–BOTCC cross-margining program will employ a 50% minimum margin factor. Should GSCC decide to change the minimum factor, it will submit a proposed rule filing under Section 19(b) of the Act.

[15] GSCC will review the cross-margining parameters on a yearly basis unless market events dictate the need for more frequent reviews. Letter from Jeffrey F. Ingber, Managing Director, General Counsel, and Secretary, GSCC (November 6, 2001).

and soundness of the settlement process for the Government securities marketplace by: (1) Providing clearing organizations with more information concerning members' intermarket positions (which is especially valuable during stressed market conditions) to enable them to make more accurate decisions regarding the true risk of such positions to the clearing organizations; (2) allowing for enhanced sharing of collateral resources; and (3) encouraging coordinated liquidation processes for a joint participant, or a participant and its affiliate, in the event of an insolvency. GSCC further believes that cross-margining benefits participating clearing members by providing members with the opportunity to more efficiently use their collateral. More important from a regulatory perspective, however, is that cross-margining programs have long been recognized as enhancing the safety and soundness of the clearing system itself. Studies of the October 1987 market break gave support to the concept of cross-margining. For example, The Report of the President's Task Force on Market Mechanisms (January 1988) noted that the absence of a cross-margining system for futures and securities options markets contributed to payment strains in October 1987. The Interim Report of the President's Working Group on Financial Markets (May 1988) also recommended that the SEC and the Commodity Futures Trading Commission facilitate cross-margining programs among clearing organizations. This resulted in the first cross-margining arrangement between clearing organizations which was approved in 1988.[16]

III. Discussion

Section 19(b) of the Act directs the Commission to approve a proposed rule change of a self-regulatory organization if it finds that such proposed rule change is consistent with the requirements of the Act and the rules and regulations thereunder applicable to such organization. In section 17A(a)(2)(A)(ii) of the Act, Congress directs the Commission having due regard for, among other things, the public interest, the protection of investors, the safeguarding of securities and funds, to use its authority under the Act to facilitate the establishment of linked or coordinated facilities for clearance and settlement of transactions in securities, securities options, contracts of sale for future delivery and options thereon, and commodity options.[17] Section 17A(b)(3)(F) of the Act requires that the rules of a clearing agency be designed to assure the safeguarding of securities and funds which are in the custody or control of the clearing agency for which it is responsible.[18] The Commission finds that the approval of GSCC's proposed rule change is consistent with these Sections.

First, the Commission's approval of GSCC's proposed rule change to establish a cross-margining arrangement with BOTCC and to extend its hub and spoke approach to cross-margining to include BOTCC along with CME and NYCC is in line with the Congressional directive to the Commission to facilitate linked and coordinated facilities for the clearance and settlement of securities and futures.[19] Second, approval of GSCC's proposal should result in increased and better information sharing between GSCC and Participating COs regarding the portfolios and financial conditions of participating joint and affiliated members. As a result, GSCC and participating COs will be in a better position to monitor and assess the potential risks of participating joint or affiliated members and will be in a better position to handle the potential losses presented by the insolvency of any joint or affiliated member. Therefore, GSCC's proposal should help GSCC better safeguard the securities and funds in its possession or control or for which it is responsible. While cross-margining should provide benefits and efficiencies to common participants in GSCC and BOTCC, GSCC has determined to adopt a conservative approach in introducing its cross-margining program with BOTCC. We believe that that is a prudent approach consistent with maintaining the safety and soundness of the national system for prompt and accurate clearance and settlement of transactions in securities.

IV. Conclusion

On the basis of the foregoing, the Commission finds that the proposed rule change is consistent with the requirements of the Act and in particular section 17A of the Act and the rules and regulations thereunder.

It Is Therefore Ordered, pursuant to section 19(b)(2) of the Act, that the proposed rule change (File No. SR–GSCC–2001–03) be and hereby is approved.

For the Commission by the Division of Market Regulation, pursuant to delegated authority.[20]

Margaret H. McFarland,

Deputy Secretary.

[FR Doc. 02–2371 Filed 1–30–02; 8:45 am]

BILLING CODE 8010–01–P

[16] Securities Exchange Act Release No. 26153 (October 3, 1988), 53 FR 39567 (October 7, 1988) [File No. SR–OCC–86–17] (order approving cross-margining program between OCC and The Intermarket Clearing Corporation).

[17] 15 U.S.C. 78q–1(a)(2)(A)(ii).

[18] 15 U.S.C. 78q-1(b)(3)(F).

[19] 15 U.S.C. 78q-1(a)(2)(A)(ii).

[20] 17 CFR 200.30–3(a)(12).

DEPARTMENT OF STATE

[Public Notice 3901]

Bureau of Educational and Cultural Affairs Request for Grant Proposals: International Sports Programming Initiative

SUMMARY: The Office of Citizen Exchanges of the Bureau of Educational and Cultural Affairs announces an open competition for International Sports Programming Initiative. Public and private non-profit organizations meeting the provisions described in Internal Revenue Code 26 U.S.C. 501(c)(3) may submit proposals to discuss approaches designed to enhance and improve the infrastructure of youth sports programs in selected countries in Africa, South Asia, Central Asia, South East Asia and the Near East.

Program Information:

Overview

The Office of Citizen Exchanges welcomes proposals that directly respond to the following thematic areas. Given budgetary limitations, projects for other themes will not be eligible for consideration under the FY–2002 Sports Program Initiative.

Training Sports Coaches

The World Summit on Physical Education (Berlin, 1999) stated that a ''quality physical education helps children to develop the patterns of interest in physical activity, which are essential for healthy development and which lay the foundation for healthy, adult lifestyles.'' Coaches are critical to the accomplishment of this goal. A coach not only needs to be qualified to provide the technical assistance required by young athletes to improve, but must also understand how to aid a young person to discover how success in athletics can be translated into achievement in the development of life skills and in the classroom. Projects submitted in response to this theme would be aimed at aiding youth, secondary school and university coaches in the target countries in the development and implementation of appropriate training methodologies,

through seminars and outreach. The goal is to ensure the optimal technical proficiency among the coaches participating in the program while also emphasizing the role sports can play in the long-term economic well being of youth.

Youth Sports Management Exchange

Exchanges funded under this theme would help American and foreign youth sport coaches, adult sponsors, and sports associations officials share their experience in managing and organizing youth sports activities, particularly in financially challenging circumstances, and would contribute to better understanding of role of sports as an significant factor in educational success. Americans are in a good position to convey to the foreign counterparts the importance of linking success in sports to educational achievement and how these two factors can contribute to short-term and long-term economic prospects.

Youth With Disability

Exchanges supported by this theme are designed to promote and sponsor sports, recreation, fitness and leisure events for children and adults with physical disabilities. Project goals include improving the quality of life for people with disabilities by providing affordable inclusive sports and recreational experiences that build self-esteem and confidence, enhancing active participation in community life and making a significant contribution to the physical and psychological health of people with disabilities. Physically and developmentally challenged individuals will be fully included in the sports and recreation opportunities in our communities.

Sports and Health

Projects funded under this category will focus on effective and practical ways to use sport personalities and sports health professionals to increase awareness among young people of the importance of following a healthy life style to reduce illness, prevent injuries and speed the rehabilitation and recovery. Emphasis will be on the responsibility of the broader community to support healthy behavior. The project goals are to promote and integrate scientific research, education, and practical applications of sports medicine and exercise science to maintain and enhance physical performance, fitness, health, and quality of life. (Actual medical training and dispensing of medications are outside the purview of this theme.)

Guidelines

The Office seeks proposals that provide professional experience and exposure to American life and culture through internships, workshops and other learning-sharing experiences hosted by local institutions. The experiences also will provide Americans the opportunity to learn about culture and the social and economic challenges young athletes face today. Travel under these grants should provide for a two-way exchange. Projects should not simply focus on athletic training; they should be designed to provide practical, hands-on experience in U.S. public/private sector settings that may be adapted to an individual's institution upon return home. Proposals may combine elements of professional enrichment, job shadowing and internships appropriate to the language ability and interests of the participants.

Applicants must identify the local organizations and/or individuals in the counterpart country with whom they are proposing to collaborate and describe in detail previous cooperative programming and/or contacts. Specific information about the counterpart organizations' activities and accomplishments should be included in the section on Institutional Capacity.

Exchanges and training programs supported by the institutional grants from the Bureau should operate at two levels: they should enhance institutional partnerships, and they should offer practical information to individuals and groups to assist them with their professional responsibilities. Strong proposals usually have the following characteristics: A strong existing partnership between a U.S. organization and an in-country institution or the potential to develop such a linkage; a proven track record of working in the proposed field; cost-sharing from U.S. and/or in-country sources; experienced staff with language facility; a clear, convincing plan showing how permanent results will be accomplished as a result of the activity funded by the grant; and a follow-on plan beyond the scope of the Bureau grant. The Bureau would like to see tangible forms of time and money contributed to the project by the prospective grantee institution, as well as funding from third party sources.

Programs must comply with J–1 visa regulations. Please refer to Solicitation Package for further information.

Selection of Participants

All grant proposals should clearly describe the type of persons who will participate in the program as well as the process by which participants will be selected. It is recommended that programs in support of U.S. internships include letters tentatively committing host institutions to support the internships. In the selection of foreign participants, the Bureau and U.S. Embassies abroad retain the right to review all participant nominations and to accept or deny participants recommended by grantee institutions. However, grantee institutions should describe in detail the recruitment and selection process they recommend. The grantee institution will also provide the names of American participants and brief (two pages) biographical data on each American participant to the Office of Citizen Exchanges for information purposes. Priority will be given to foreign participants who have not previously traveled to the United States.

Budget Guidelines

The Bureau has an overall budget of $400,000 for this competition. Grants awarded to eligible organizations with less than four years of experience in conducting international exchange programs will be limited to $60,000. The Bureau has set a ceiling of $135,000 for proposals funded under this competition. The Bureau encourages applicants to provide maximum levels of cost sharing and funding from private sources in support of its programs.

Applicants must submit a comprehensive budget for the entire program. Grant awards may not exceed $135,000. There must be a summary budget as well as breakdowns reflecting both administrative and program budgets. Applicants may provide separate sub-budgets for each program component, phase, location, or activity to provide clarification.

Allowable costs for the program include the following:

(1) All Participant Expenses (foreign and American).

(2) Other Program Expenses as needed and justified.

(3) Administrative Expenses including indirect costs.

Please refer to the Solicitation Package for complete budget guidelines and formatting instructions.

Announcement Title and Number

All correspondence with the Bureau concerning this RFGP should reference the above title ''Sports Programming Initiative'' and reference number ECA/PE/C–02–55.

FOR FURTHER INFORMATION CONTACT: Please contact the Office of Citizen Exchanges, Room 224, U.S. Department of State, 301 4th Street, SW.,

Washington, DC 20547, telephone number 202/619–5326, fax number 202/260–0440, or *pmidgett@pd.state.gov* to request a Solicitation Package. The Solicitation Package contains detailed award criteria, required application forms, specific budget instructions, and standard guidelines for proposal preparation. Please specify Bureau Program Raymond H. Harvey on all other inquiries and correspondence.

Please read the complete **Federal Register** announcement before sending inquiries or submitting proposals. Once the RFGP deadline has passed, Bureau staff may not discuss this competition with applicants until the proposal review process has been completed.

To Download a Solicitation Package Via Internet

The entire Solicitation Package may be downloaded from the Bureau's Web site at *http://exchanges.state.gov/education/RFGPs.* Please read all information before downloading.

Deadline for Proposals

All proposal copies must be received at the Bureau of Educational and Cultural Affairs by 5 p.m. Washington, DC time on Friday, April 19, 2002. Faxed documents will not be accepted at any time. Documents postmarked the due date but received on a later date will not be accepted. Each applicant must ensure that the proposals are received by the above deadline.

Applicants must follow all instructions in the Solicitation Package. The original and ten copies of the application should be sent to: U.S. Department of State, SA–44, Bureau of Educational and Cultural Affairs, Ref.: ECA/PE/C–02–55, Program Management, ECA/EX/PM, Room 534, 301 4th Street, SW, Washington, DC 20547.

Applicants must also submit the ''Executive Summary'' and ''Proposal Narrative'' sections of the proposal on a 3.5'' diskette, formatted for DOS. These documents must be provided in ASCII text (DOS) format with a maximum line length of 65 characters. The Bureau will transmit these files electronically to the Public Affairs section at the US Embassy for its review, with the goal of reducing the time it takes to get embassy comments for the Bureau's grants review process.

Diversity, Freedom and Democracy Guidelines

Pursuant to the Bureau's authorizing legislation, programs must maintain a non-political character and should be balanced and representative of the diversity of American political, social, and cultural life. ''Diversity'' should be interpreted in the broadest sense and encompass differences including, but not limited to ethnicity, race, gender, religion, geographic location, socio-economic status, and physical challenges. Applicants are strongly encouraged to adhere to the advancement of this principle both in program administration and in program content. Please refer to the review criteria under the ''Support for Diversity'' section for specific suggestions on incorporating diversity into the total proposal. Public Law 104–319 provides that ''in carrying out programs of educational and cultural exchange in countries whose people do not fully enjoy freedom and democracy,'' the Bureau ''shall take appropriate steps to provide opportunities for participation in such programs to human rights and democracy leaders of such countries.'' Public Law 106–113 requires that the governments of the countries described above do not have inappropriate influence in the selection process. Proposals should reflect advancement of these goals in their program contents, to the full extent deemed feasible.

Review Process

The Bureau will acknowledge receipt of all proposals and will review them for technical eligibility. Proposals will be deemed ineligible if they do not fully adhere to the guidelines stated herein and in the Solicitation Package. The Program Office and the Public Diplomacy section overseas will review all eligible proposals. Eligible proposals will be subject to compliance with Federal and Bureau regulations and guidelines and forwarded to Bureau grant panels for advisory review. Proposals may also be reviewed by the Office of the Legal Adviser or by other Department elements. Final funding decisions are at the discretion of the Department of State's Assistant Secretary for Educational and Cultural Affairs. Final technical authority for assistance awards resides with the Bureau's Grants Officer.

Review Criteria

Technically eligible applications will be competitively reviewed according to the criteria stated below. These criteria are not rank ordered and all carry equal weight in the proposal evaluation:

1. *Quality of the program idea:* Proposals should exhibit originality, substance, precision, and relevance to the Bureau's mission.

2. *Program planning:* Detailed agenda and relevant work plan should demonstrate substantive undertakings and logistical capacity. Agenda and plan should adhere to the program overview and guidelines described above.

3. *Ability to achieve program objectives:* Objectives should be reasonable, feasible, and flexible. Proposals should clearly demonstrate how the institution will meet the program's objectives and plan.

4. *Multiplier effect/impact:* Proposed programs should strengthen long-term mutual understanding, including maximum sharing of information and establishment of long-term institutional and individual linkages.

5. *Support of Diversity:* Proposals should demonstrate substantive support of the Bureau's policy on diversity. Achievable and relevant features should be cited in both program administration (selection of participants, program venue and program evaluation) and program content (orientation and wrap-up sessions, program meetings, resource materials and follow-up activities).

6. *Institutional Capacity:* Proposed personnel and institutional resources should be adequate and appropriate to achieve the program or project's goals.

7. *Institution's Record/Ability:* Proposals should demonstrate an institutional record of successful exchange programs, including responsible fiscal management and full compliance with all reporting requirements for past Bureau grants as determined by Bureau Grant Staff. The Bureau will consider the past performance of prior recipients and the demonstrated potential of new applicants.

8. *Follow-on Activities:* Proposals should provide a plan for continued follow-on activity (without Bureau support) ensuring that Bureau supported programs are not isolated events.

9. *Project Evaluation:* Proposals should include a plan to evaluate the activity's success, both as the activities unfold and at the end of the program. A draft survey questionnaire or other technique plus description of a methodology to be used to link outcomes to original project objectives is recommended. Intermediate reports after each project phase or quarterly reports are required.

10. *Cost-effectiveness/Cost-sharing:* The overhead and administrative components of the proposal, including salaries and honoraria, should be kept as low as possible. All other items should be necessary and appropriate. Proposals should maximize cost sharing through other private sector support as well as institutional direct funding contributions.

11. *Value to U.S.-Partner Country Relations:* Proposed projects should receive positive assessments by the U.S. Department of State's geographic area desk and overseas officers of program need, potential impact, and significance in the partner country(ies).

Authority: Overall grant making authority for this program is contained in the Mutual Educational and Cultural Exchange Act of 1961, Pub. L. 87–256, as amended, also known as the Fulbright-Hays Act. The purpose of the Act is ''to enable the Government of the United States to increase mutual understanding between the people of the United States and the people of other countries * * * to strengthen the ties which unite us with other nations by demonstrating the educational and cultural interests, developments, and achievements of the people of the United States and other nations * * * and thus to assist in the development of friendly, sympathetic and peaceful relations between the United States and the other countries of the world.'' The funding authority for the program above is provided through legislation.

Notice

The terms and conditions published in this RFGP are binding and may not be modified by any Bureau representative. Explanatory information provided by the Bureau that contradicts published language will not be binding. Issuance of the RFGP does not constitute an award commitment on the part of the Government. The Bureau reserves the right to reduce, revise, or increase proposal budgets in accordance with the needs of the program and the availability of funds. Awards made will be subject to periodic reporting and evaluation requirements.

Notification

Final awards cannot be made until funds have been appropriated by Congress, allocated and committed through internal Bureau procedures.

Dated: January 25, 2002.

Patricia S. Harrison,

Assistant Secretary for Educational and Cultural Affairs, U.S. Department of State.

[FR Doc. 02–2420 Filed 1–23–02; 8:45 am]

BILLING CODE 4710–05–P

DEPARTMENT OF STATE

[Public Notice 3900]

Office of International Energy and Commodities Policy; Notice of Receipt of Application for a Presidential Permit for Pipeline Facilities To Be Constructed and Maintained on the Border of the United States

AGENCY: Department of State.

Notice is hereby given that the Department of State has received an application from Reef International, L.L.C. (Reef) for a Presidential permit, pursuant to Executive Order 11423 of August 16, 1968, as amended by Executive Order 12847 of May 17, 1993, authorizing the construction, connection, operation, and maintenance at the U.S.-Mexican border at Eagle Pass, Texas of a liquid pipeline carrying liquefied petroleum gas, including propane and butane, and related facilities.

Reef is a limited liability corporation organized and existing under the laws of the State of Texas and with its principal office located in Corpus Christi, Texas. The proposed new 6-inch diameter pipeline would originate at a proposed new transfer and blending station in Eagle Pass, Texas and cover approximately 5 miles, crossing under the Rio Grande River and terminating at a proposed new storage and unloading station in Coahuila, Mexico approximately 1,000 feet from the International Boundary. It is anticipated that initial deliveries of the propane/butane mixture will be approximately 500,000 GPD, increasing to approximately 2,000,000 GPD in two years.

As required by E.O. 11423, the Department of State is circulating this application to concerned agencies for comment.

DATES: Interested parties are invited to submit, in duplicate, comments relative to this proposal on or before March 4, 2002, to James Dudley, Office of International Energy and Commodities Policy, Department of State, Washington, DC 20520. The application and related documents that are part of the record to be considered by the Department of State in connection with this application are available for inspection in the Office of International Energy and Commodities Policy during normal business hours.

FOR FURTHER INFORMATION CONTACT: James Dudley, Office of International Energy and Commodities Policy, Department of State, Washington, DC 20520; or by telephone at (202) 647–2857; or by fax at (202) 647–4037.

Dated: January 25, 2002.

Stephen J. Gallogly,

Director, Office of International Energy and Commodities Policy.

[FR Doc. 02–2419 Filed 1–30–02; 8:45 am]

BILLING CODE 4710–07–P

DEPARTMENT OF TRANSPORTATION

Office of the Secretary

Aviation Proceedings, Agreements Filed During the Week Ending January 18, 2002

The following Agreements were filed with the Department of Transportation under provisions of 49 U.S.C. Sections 412 and 414. Answers may be filed within 21 days after the filing of the application.

Docket Number: OST–2002–11336.
Date Filed: January 16, 2002.
Parties: Members of the International Air Transport Association.
Subject: PTC COMP 0891 dated 18 January 2002, Mail Vote 192—Resolution 024d, Amend rounding units for the Romanian Leu, Intended effective date: 1 February 2002.

Docket Number: OST–2002–11357.
Date Filed: January 17, 2002.
Parties: Members of the International Air Transport Association.
Subject: PTC123 0172 dated 18 January 2002, Mail Vote 193—Resolution 010v, Special Amending Resolution—Korea (Rep. of), Intended effective date: 1 February 2002.

Dorothy Y. Beard,

Federal Register Liaison.

[FR Doc. 02–2355 Filed 1–30–02; 8:45 am]

BILLING CODE 4910–62–P

DEPARTMENT OF TRANSPORTATION

Office of the Secretary

Notice of Applications for Certificates of Public Convenience and Necessity and Foreign Air Carrier Permits Filed Under Subpart B (formerly Subpart Q) During the Week Ending January 18, 2002

The following Applications for Certificates of Public Convenience and Necessity and Foreign Air Carrier Permits were filed under Subpart B (formerly Subpart Q) of the Department of Transportation's Procedural Regulations (See 14 CFR 301.201 *et seq.*). The due date for Answers, Conforming Applications, or Motions to Modify Scope are set forth below for each application. Following the Answer period, DOT may process the application by expedited procedures. Such procedures may consist of the adoption of a show-cause order, a tentative order, or in appropriate cases a final order without further proceedings.

Docket Number: OST–2002–11335.
Date Filed: January 15, 2002.

Due Date for Answers, Conforming Applications, or Motion to Modify Scope: February 5, 2002.

Description: Application of Piedmont Aviation Services, Inc., d/b/a Pace Airlines (PASI), requesting the Department to disclaim jurisdiction and reissue its certificates in the name of Pace Airlines, Inc. (PACE). In the alternative, PASI requests that the Department approve the transfer of PASI's certificates of public convenience and necessity and other operating authority to PACE with an effective date of no later than January 25, 2002.

Dorothy Y. Beard,

Federal Register Liaison.

[FR Doc. 02–2354 Filed 1–30–02; 8:45 am]

BILLING CODE 4910–62–P

DEPARTMENT OF TRANSPORTATION

Federal Aviation Administration

Proposed Revisions to Advisory Circular—Flight Test Guide for Certification of Transport Category Airplanes

AGENCY: Federal Aviation Administration, DOT.

ACTION: Notice of proposed advisory circular revision and request for comments.

SUMMARY: This notice requests comments regarding proposed revisions to Advisory Circular (AC) 25–7A, ''Flight Test Guide for Certification of Transport Category Airplanes.'' This AC provides guidance on acceptable means, but not the only means, of demonstrating compliance with certain airworthiness standards for transport category airplanes. The proposed revisions to the AC complement proposed revisions to the airworthiness standards for transport category airplanes, published by separate document in the **Federal Register** on January 14, 2002 (67 FR 1846). This notice provides interested persons an opportunity to comment on the proposed revisions to the AC concurrently with the proposed rulemaking. Like all ACs, it is not mandatory, but is to provide guidance for applicants in demonstrating compliance with the objective safety standards set forth in the related rule.

DATES: Comments must be received by April 1, 2002.

ADDRESSES: Send all comments on the proposed AC revisions to the Federal Aviation Administration, Attention: Don Stimson, Airplane and Flight Crew Interface Branch, ANM–111, Transport Airplane Directorate, Aircraft Certification Service, 1601 Lind Ave. SW., Renton, WA 98055–4056. Comments may be examined at the above address between 7:30 a.m. and 4 p.m. weekdays, except Federal holidays.

FOR FURTHER INFORMATION CONTACT: Susan Boylon, Program Management Branch, ANM–114, at the above address, telephone (425) 227–1152, or facsimile (425) 227–1320.

SUPPLEMENTARY INFORMATION:

Comments Invited

Interested persons are invited to comment on the proposed revisions to the AC by submitting such written data, views, or arguments, as they may desire. Commenters must identify the title of the AC and submit comments in duplicate to the address specified above. All comments received on or before the closing date for comments will be considered by the Transport Airplane Directorate before issuing the revised AC.

Discussion

In a separate document published in the **Federal Register** on January 14, 2002 (67 FR 1846), the FAA proposes to amend the airworthiness standards for transport category airplanes concerning miscellaneous flight requirements. We initiated the proposal under the ''Fast Track Harmonization Program'' November 26, 1999 (64 FR 66522). Adopting that proposal would eliminate regulatory differences between the airworthiness standards of the U.S. and the Joint Aviation Requirements of Europe, without affecting current industry design practices.

In addition to the amendments proposed in Notice 02–01, the FAA also proposes to revise Advisory Circular (AC) 25–7A, ''Flight Test Guide for Certification of Transport Category Airplanes,'' to provide additional guidance concerning takeoff path, lateral control, trim (longitudinal), trim (airplanes with four or more engines), and demonstration of static longitudinal stability. This proposed revision to AC 25–7A should not be confused with other proposed revisions of AC 25–7A on which the FAA is currently seeking comments. This revision only addresses guidance material associated with these specific airworthiness requirements. Issuance of a revised AC based on this proposal is contingent on adoption of the revisions to part 25 in Notice 02–01.

Proposed Revisions to AC 25–7A

1. *Add a new paragraph, 12a(1)(iii) to read as follows:*

(iii) The height references in § 25.111 should be interpreted as geometrical heights.

2. *Revise paragraph 12e(2) to read as follows:*

(2) Procedures. The time between liftoff and the initiation of gear retraction during takeoff distance demonstrations should not be less than that necessary to establish an indicated positive rate of climb plus one second. For the purposes of flight manual expansion, the average demonstrated time delay between liftoff and initiation of gear retraction may be assumed; however, this value should not be less than 3 seconds.

3. *Revise paragraph 22a(2) to read as follows:*

(2) Sections 25.147(c) and (e) require an airplane to be easily controllable with the critical engine(s) inoperative. Section 25.147(d) further requires that lateral control be sufficient to provide a roll rate necessary for safety, without excessive control forces or travel, at the speeds likely to be used with one engine inoperative. Compliance can normally be demonstrated in the takeoff configuration at V_2 speed, because this condition is usually the most critical. Normal operation of a yaw stability augmentation system (SAS) should be considered in accordance with normal operating procedures. Roll response, § 25.147(e), should be satisfactory for takeoff, approach, landing, and high speed configurations. Any permissible configuration that could affect roll response should be evaluated.

4. *Revise paragraph 22b as follows:*

b. Procedures. The following test procedures outline an acceptable means for demonstrating compliance with § 25.147.

5. *Revise paragraph 22b(4) to read as follows:*

(4) *Lateral Control—Roll Capability, § 25.147(d).*

(i) Configuration:

(A) Maximum takeoff weight.

(B) Most aft c.g. position.

(C) Wing flaps in the most critical takeoff position.

(D) Landing gear retracted.

(E) Yaw SAS on, and off, if applicable.

(F) Operating engine(s) at maximum takeoff power.

(G) The inoperative engine that would be most critical for controllability, with the propeller feathered, if applicable.

(ii) Test Procedure: With the airplane in trim, or as nearly as possible in trim, for straight flight at V_2, establish a steady 30 degree banked turn. It should be demonstrated that the airplane can be rolled to a 30 degree bank angle in the other direction in not more than 11 seconds. In this demonstration, the

rudder may be used to the extent necessary to minimize sideslip. The demonstration should be made in the most adverse direction. The maneuver may be unchecked. Care should be taken to prevent excessive sideslip and bank angle during the recovery.

6. *Revise paragraph 22b(4) by renumbering it as paragraph 22b(5) as follows:*

(5) *Lateral Control—Four or More Engines, § 25.147(e).*

7. *Revise paragraph 22b(5) by renumbering it as paragraph 22b(6) as follows:*

(6) *Lateral Control—All Engines Operating, § 25.147(f).*

Issued in Renton, Washington, on December 19, 2001.

Ali Bahrami,

Acting Manager, Transport Airplane Directorate, Aircraft Certification Service.

[FR Doc. 02–1003 Filed 1–30–02; 8:45 am]

BILLING CODE 4910–13–P

DEPARTMENT OF TRANSPORTATION

Federal Aviation Administration

Notice of Intent To Request Renewal From the Office of Management and Budget (OMB) of Five Current Public Collections of Information

AGENCY: Federal Aviation Administration (FAA), DOT.

ACTION: Notice.

SUMMARY: In compliance with the Paperwork Reduction Act (44 U.S.C. 3501 et seq.), the FAA invites public comment on five currently approved public information collections which will be submitted to OMB for renewal.

DATES: Comments must be received on or before April 1, 2002.

ADDRESSES: Comments may be mailed or delivered to the FAA at the following address: Ms. Judy Street, Room 613, Federal Aviation Administration, Standards and Information Division, APF–100, 800 Independence Ave., SW., Washington, DC 20591.

FOR FURTHER INFORMATION CONTACT: Ms. Judy Street at the above address or on (202) 267–9895.

SUPPLEMENTARY INFORMATION: In accordance with the Paperwork Reduction Act of 1995, an agency may not conduct or sponsor, and a person is not required to respond to a collection of information unless it displays a currently valid OMB control number. Therefore, the FAA solicits comments on the following current collections of information in order to evaluate the necessity of the collection, the accuracy of the agency's estimate of the burden, the quality, utility, and clarity of the information to be collected, and possible ways to minimize the burden of the collection in preparation for submission to renew the clearances of the following information collections.

1. *2120–0003, Malfunction or Defect Report.* Collection of this information permits the FAA to evaluate its certification standards, maintenance programs, and regulatory requirements since their effectiveness is reflected in the number of equipment failures or the lack thereof. It is also the basis for issuance of Airworthiness Directives designed to prevent unsafe conditions or accidents. The affected public includes aircraft and repair station operators. The current estimated annual reporting burden is 6,935 hours.

2. *2120–0027, Application for Certificate of Waiver or Authorization.* Part A of Subtitle VII of the Revised Title 49 United States Code authorizes the issuance of regulations governing the use of navigable airspace. 14 CFR 91, 101, and 105 prescribe regulations governing the general operation and flight of aircraft, moored balloons, kites, unmanned rockets, unmanned free balloons, and parachute jumping. Applicants are individual airmen, state and local governments, and businesses who have a need to deviate from the provisions of these regulations. The current estimated annual reporting burden is 12,202 hours.

3. *2120–0507, Special Federal Aviation Regulation (SFAR) 36, Development of Major Repair Data.* SFAR 36 (to part 121) relieves qualifying applicants (Aircraft Maintenance, Commercial Aviation, Aircraft Repair Stations, Air Carriers, Air Taxi, and Commercial Operators) of the burden to obtain FAA approval of data developed by them for major repairs on a case-by-case basis, and provides for one-time approvals. The current estimated annual reporting burden is 530 hours.

4. *2120–0574, Aviation Safety Counselor of the Year Competition.* The form is used to select nominees for recognition of their volunteer services to the FAA. The agency will use the information on the form to select nine regional winners and one national winner among private citizens involved in aviation. The current estimated annual reporting burden is 180 hours.

5. *2120–0644, License Requirements for Operation of a Launch Site.* The information to be collected includes data required for performing launch site location analyses. This data is necessary in order to demonstrate to the Associate Administrator for Space Transportation/FAA that the proposed activity meets applicable public safety, national security, and foreign policy interests of the United States. A launch site is valid for a period of five years. Respondents are licensees authorized to operate sites. The current estimated annual reporting burden is 1592 hours.

Issued in Washington, DC, on January 24, 2002.

Steve Hopkins,

Manager, Standards and Information Division, APF–100.

[FR Doc. 02–2282 Filed 1–30–02; 8:45 am]

BILLING CODE 4910–13–M

DEPARTMENT OF TRANSPORTATION

Federal Aviation Administration

Third Party War Risk Liability Insurance

AGENCY: Federal Aviation Administration, DOT.

ACTION: Notice of extension.

SUMMARY: This notice contains the text of a memo from the Secretary of Transportation to the President regarding the extension of the provision of aviation insurance coverage for U.S. flag commercial air carrier service in domestic and international operations.

DATES: Dates of extension from January 20, 2002 through March 20, 2002.

FOR FURTHER INFORMATION CONTACT: Helen Kish, Program Analyst, APO–3, or Eric Nelson, Program Analyst, APO–3, Federal Aviation Administration, 800 Independence Ave., SW., Washington, DC 20591, telephone 202–267–9943 or 202–267–3090. Or online at *FAA Insurance Website: http://api.hq.faa.gov/911policies/inscover.html.*

SUPPLEMENTARY INFORMATION: On January 4, 2002, the Secretary of Transportation authorized a 60-day extension of aviation insurance provided by the Federal Aviation Administration as follows:

Memorandum to the President

''Pursuant to the authority delegated to me in paragraph (3) of Presidential Determination No. 01–29 of September 23, 2001, I have extended that determination to allow for the provision of aviation insurance and reinsurance coverage for U.S. Flag commercial air service in domestic and international operations for an additional 60 days.

Pursuant to section 44306(c) of chapter 443 of 49 U.S.C.—Aviation Insurance, the period for provision of insurance shall be extended from January 20, 2002, through March 20, 2002.''

/s/Norman Y. Mineta

Affected Public: Air Carriers who currently have Third Party War-Risk Liability Insurance with the Federal Administration.

Issued in Washington, DC, on January 24, 2002.

Nan Shellabarger,

Deputy Director, Office of Aviation Policy and Plans.

[FR Doc. 02–2279 Filed 1–30–02; 8:45 am]

BILLING CODE 4910–13–M

DEPARTMENT OF TRANSPORTATION

Federal Aviation Administration

RTCA Special Committee 187: Mode Select Beacon and Data Link System

AGENCY: Federal Aviation Administration (FAA), DOT.

ACTION: Notice of RTCA Special Committee 187 meeting.

SUMMARY: The FAA is issuing this notice to advise the public of a meeting of RTCA Special Committee 187: Mode Select Beacon and Data Link System.

DATES: The meeting will be held February 19–20, 2002, from 9 a.m. to 5 p.m.

ADDRESSES: The meeting will be held at RTCA, 1828 L Street, NW., Suite 805, Washington, DC 20036.

FOR FURTHER INFORMATION CONTACT: RTCA Secretariat, 1828 L Street, NW., Washington, DC 20036; telephone (202) 833–9339; fax (202) 833–9434; Web site *http://www.rtca.org*.

SUPPLEMENTARY INFORMATION: Pursuant to section 10(a)(2) of the Federal Advisory Committee Act (Pub. L. 92–463, 5 U.S.C., Appendix 2), notice is hereby given for a Special Committee 187 meeting. The agenda will include:

- February 19–20:
- Opening Session (Chairman's Introductory Remarks, Review and Approve Agenda, Approve Previous Meeting Minutes).
- Review Revision C—Proposed Change 1 to RTCA DO–181C, RTCA Paper No. 016–02/SC187–047, *Addition of Hijack Mode Operations*.
- Closing Session (Other Business, Date and Time of Next Meeting, Adjourn).

Attendance is open to the interested public but limited to space availability. With the approval of the chairmen, members of the public may present oral statements at the meeting. Persons wishing to present statements or obtain information should contact the person listed in the **FOR FURTHER INFORMATION CONTACT** section. Members of the public may present a written statement to the committee at any time.

Issued in Washington, DC, on January 23, 2002.

Janice L. Peters,

FAA Special Assistant, RTCA Advisory Committee.

[FR Doc. 02–2409 Filed 1–30–02; 8:45 am]

BILLING CODE 4910–13–M

DEPARTMENT OF TRANSPORTATION

Federal Aviation Administration

Notice of Intent To Rule on Application 02–05–C–00–CAK To Impose and Use the Revenue From a Passenger Facility Charge (PFC) at Akron-Canton Regional Airport, North Canton, Ohio

AGENCY: Federal Aviation Administration (FAA), DOT.

ACTION: Notice of intent to rule on application.

SUMMARY: The FAA proposes to rule and invites public comment on the application to impose and use the revenue from a PFC at Akron-Canton Regional Airport under the provisions of the 49 U.S.C. 40117 and Part 158 of the Federal Aviation Regulations (14 CFR Part 158).

DATES: Comments must be received on or before March 4, 2002.

ADDRESSES: Comments on this application may be mailed or delivered in triplicate to the FAA at the following address:

Federal Aviation Administration, Detroit Airports District Office, Willow Run Airport, East, 8820 Beck Road, Belleville, Michigan 48111. The application may be reviewed in person at this location.

In addition, one copy of any comments submitted to the FAA must be mailed or delivered to Mr. Richard B. McQueen, Akron-Canton Regional Airport at the following address: Akron-Canton Regional Airport, 5400 Lauby Road, #9, North Canton, Ohio 44720.

Air carriers and foreign air carriers may submit copies of written comments previously provided to the Akron-Canton Regional Airport Authority under section 158.23 of Part 158.

FOR FURTHER INFORMATION CONTACT: Ms. Arlene B. Draper, Program Manager, Federal Aviation Administration, Detroit Airports District Office, Willow Run Airport, East, 8820 Beck Road, Belleville, Michigan 48111 (734–487–7282). The application may be reviewed in person at this same location.

SUPPLEMENTARY INFORMATION: The FAA proposes to rule and invites public comment on the application to impose and use the revenue from a PFC at Akron-Canton Regional Airport under the provisions of the 49 U.S.C. 40117 and Parts 158 of the Federal Aviation Regulations (14 CFR Part 158).

On December 21, 2001, the FAA determined that the application to impose and use the revenue from a PFC submitted by Akron-Canton Regional Airport Authority was substantially complete within the requirements of section 158.25 of Part 158. The FAA will approve or disapprove the application, in whole or in part, not later than April 9, 2002.

The following is a brief overview of the application.

Proposed charge effective date: September 1, 2002.

Proposed charge expiration date: November 1, 2007.

Level of the proposed PFC: $4.50.

Total estimated PFC revenue: $8,277,000.

Brief description of proposed projects: Impose and Use: Property Acquisition—Nickison, Lockhart, Tucker, Peters, Snow Removal Equipment, Passenger Loading Bridge, Engine Generator-Back-up Power, Runway 5/23 Overlay, Entrance Road Rehabilitation, Terminal Baggage Claim Expansion, Terminal Expansion/Rehabilitation, Shift/Extension Runway 1/19 Phase II, Airport Access Improvement—Shuffel Road Interchange.

Use Only: Relocate Mount Pleasant and Frank Roads, Runway 1 Extension, Runway 19 Runway Safety Area Improvements. Class or classes of air carriers which the public agency has requested to be required to collect PFCs: air taxi/commercial operators.

Any person may inspect the application in person at the FAA office listed above under **FOR FURTHER INFORMATION CONTACT.**

In addition, any person may, upon request, inspect the application, notice and other documents germane to the application in person at the Akron-Canton Regional Airport, 5400 Lauby Road, #9, North Canton, Ohio 44720.

Issued in Des Plaines, Illinois, on January 18, 2002.

Mark A. McClardy,

Acting Manager, Planning/Programming Branch, Airports Division, Great Lakes Region.

[FR Doc. 02–2280 Filed 1–30–02; 8:45 am]

BILLING CODE 4910–13–M

DEPARTMENT OF TRANSPORTATION

Federal Aviation Administration

Intent To Rule on Application 02–13–U–00–ORD To Use the Revenue From a Passenger Facility Charge (PFC) at Chicago O'Hare International Airport, Chicago, Illinois

AGENCY: Federal Aviation Administration (FAA), DOT.

ACTION: Notice of Intent to Rule on application.

SUMMARY: The FAA proposes to rule and invites public comment on the application to use the revenue from a PFC at Chicago O'Hare International Airport under the provisions of the 49 U.S.C. 40117 and Part 158 of the Federal Aviation Regulations (14 CFR Part 158)

DATES: Comments must be received on or before March 4, 2002.

ADDRESSES: Comments on this application may be mailed or delivered in triplicate to the FAA at the following address:

Federal Aviation Administration, Chicago Airports District Office, 2300 East Devon Avenue, Room 320, Des Plaines, IL 60018.

In addition, one copy of any comments submitted to the FAA must be mailed or delivered to Mr. Thomas R. Walker, Commissioner of the City of Chicago Department of Aviation at the following address: Chicago O'Hare International Airport, P.O. Box 66142, Chicago, IL 60666.

Air carriers and foreign air carriers may submit copies of written comments previously provided to the City of Chicago Department of Aviation under section 158.23 of Part 158.

FOR FURTHER INFORMATION CONTACT: Mr. Philip M. Smithmeyer, Manager, Chicago Airports District Office, 2300 East Devon Avenue, Room 320, Des Plaines, IL 60018, (847) 294–7335. The application may be reviewed in person at this same location.

SUPPLEMENTARY INFORMATION: The FAA proposes to rule and invites public comment on the application to use the revenue from a PFC at Chicago O'Hare International Airport under the provisions of the 49 U.S.C. 40117 and Part 158 of the Federal Aviation Regulations (14 CFR Part 158).

On December 26, 2001, the FAA determined that the application to use the revenue from a PFC submitted by the City of Chicago Department of Aviation was substantially complete within the requirements of § 158.25 of Part 158. The FAA will approve or disapprove the application, in whole or in part, no later than April 4, 2002.

The following is a brief overview of the application.

Actual charge effective date: May 1, 2008.

Revised estimated charge expiration date: October 1, 2016.

Level of proposed PFC: $4.50.

Total estimated PFC revenue: $53,000,000.

Brief description of proposed project: Construct Touhy Avenue Reservoir, a 700 acre-feet stormwater reservoir on airport property directly north of Touhy Avenue and west of Mount Prospect Road.

Class or classes of air carriers which the public agency has requested not be required to collect PFCs: Air taxi operators.

Any person may inspect the application in person at the FAA office listed above under **FOR FURTHER INFORMATION CONTACT**.

In addition, any person may, upon request, inspect the application, notice and other documents germane to the application in person at the City of Chicago Department of Aviation.

Issued in Des Plaines, Illinois on January 18, 2002.

Mark A. McClardy,

Acting Manager, Planning/Programming Branch, Airports Division, Great Lakes Region.

[FR Doc. 02–2281 Filed 1–30–02; 8:45 am]

BILLING CODE 4910–13–M

DEPARTMENT OF TRANSPORTATION

Research and Special Programs Administration

Office of Hazardous Materials Safety; Notice of Applications for Exemptions

AGENCY: Research and Special Programs Administration, DOT.

ACTION: List of applicants for exemptions.

SUMMARY: In accordance with the procedures governing the application for, and the processing of, exemptions from the Department of Transportation's Hazardous Materials Regulations (49 CFR part 107, subpart B), notice is hereby given that the Office of Hazardous Materials Safety has received the applications described herein. Each mode of transportation for which a particular exemption is requested is indicated by a number in the ''Nature of Application'' portion of the table below as follows: 1—Motor vehicle, 2—Rail freight, 3—Cargo vessel, 4—Cargo aircraft only, 5—Passenger-carrying aircraft.

DATES: Comments must be received on or before March 4, 2002.

ADDRESSES: Records Center, Research and Special Programs, Administration, U.S. Department of Transportation, Washington, DC 20590.

Comments should refer to the application number and be submitted in triplicate. If confirmation of receipt of comments is desired, include a self-addressed stamped postcard showing the exemption application number.

FOR FURTHER INFORMATION CONTACT: Copies of the applications (See Docket Number) are available for inspection at the New Docket Management Facility, PL–401, at the U.S. Department of Transportation, Nassif Building, 400 7th Street, SW., Washington, DC 20590 or at *http://dms.dot.gov.*

This notice of receipt of applications for new exemptions is published in accordance with part 107 of the Federal hazardous materials transportation law (49 U.S.C. 5117(b); 49 CFR 1.53(b)).

Issued in Washington, DC, on January 25, 2002.

R. Ryan Posten,

Exemptions Program Officer, Office of Hazardous Materials, Exemptions and Approvals.

NEW EXEMPTIONS

Application No.	Docket No.	Applicant	Regulation(s) affected	Nature of exemption thereof
12897–N	RSPA–02–11397	ATK Thiokol Propulsion, Brigham City, UT.	49 CFR 173.242	To authorize the transportation in commerce of ammonium perchlorate, Division 5.1, in DOT 53 portable tanks not presently authorized. (Modes 1, 2.)

NEW EXEMPTIONS—Continued

Application No.	Docket No.	Applicant	Regulation(s) affected	Nature of exemption thereof
12898–N	RSPA–02–11398	SWS Environmental First Response, Panama City Beach, FL.	49 CFR 173.302, 173.304, 173.34	To authorize the manufacturing, marking, sale and use of a non-DOT specification salvage cylinder for overpacking damage or leaking cylinders of pressurized and non-pressurized hazardous materials for transportation in commerce. (Mode 1.)
12899–N	RSPA–02–11387	Pencor Reservoir Fluid Specialists, Broussard, LA.	49 CFR 173.201(c), 173.202(c), 173.203(c), 173.302(c), 173.302(a), 173.304(a) & (b), 175.3, 178.35(e) & (f), 178.36(a) & (b), (j), (1).	To authorize the manufacture, mark, sale and use of non-DOT specification cylinders comparable to DOT Specification 3A cylinders for use in transporting Division 2.1, 2.2 and Class 3 material. (Modes 1, 2, 3, 4.)
12902–N	RSPA–02–11389	C&S Railroad Corp., Jim Thrope, PA.	49 CFR 174.85(a)	To authorize the transportation in commerce of rail cars with alternative spacing between the locomotive and cars carrying hazardous materials. (Mode 2.)
12903–N	RSPA–02–11390	Cargill Inc., Minneapolis, MN	49 CFR 179.13	To authorize the transportation in commerce of Class 3 material in DOT Specification 111A100W1 tank cars having a maximum gross weight of 286,000 pounds. (Mode 2.)
12904–N	RSPA–02–11388	Chemex Corp., San Juan, PR	49 CFR 179.13	To authorize the transportation in commerce of Class 3 material in DOT Specification 111A100W1 tank cars having a maximum gross weight of 286,000 pounds. (Mode 2.)
12905–N	RSPA–02–11384	Railway Progress Institute, Inc. Alexandria, VA.	49 CFR 172.203(a), 172.302(c), 173.22a(a) & (b), 179.100–20(a), 179.200–24(a) & (b), 179.201–10(a), 179.220–25.	To authorize the transportation in commerce of various hazardous materials on rail cars without the required head stamping and without the exemption number on the rail car or the shipping paper. (Mode 2.)

[FR Doc. 02–2352 Filed 1–30–02; 8:45 am]
BILLING CODE 4910–60–M

DEPARTMENT OF TRANSPORTATION

Research and Special Programs Administration

Office of Hazardous Materials Safety; Notice of Applications for Modification of Exemption

AGENCY: Research and Special Programs Administration, DOT.

ACTION: List of applications for modification of exemptions.

SUMMARY: In accordance with the procedures governing the application for, and the processing of, exemptions from the Department of Transportation's Hazardous Materials Regulations (49 CFR part 107, subpart B), notice is hereby given that the Office of Hazardous Materials Safety has received the applications described herein. This notice is abbreviated to expedite docketing and public notice. Because the sections affected, modes of transportation, and the nature of application have been shown in earlier **Federal Register** publications, they are not repeated here. Requests for modifications of exemptions (e.g. to provide for additional hazardous materials, packaging design changes, additional mode of transportation, etc.) are described in footnotes to the application number. Application numbers with the suffix ''M'' denote a modification request. These applications have been separated from the new applications for exemptions to facilitate processing.

DATES: Comments must be received on or before February 15, 2002.

ADDRESSES COMMENTS TO: Records Center, Research and Special Programs, Administration, U.S. Department of Transportation, Washington, DC 20590.

Comments should refer to the application number and be submitted in triplicate. If confirmation of receipt of comments is desired, include a self-addressed stamped postcard showing the exemption number.

FOR FURTHER INFORMATION: Copies of the applications are available for inspection in the Records Center, Nassif Building, 400 7th Street SW., Washington, DC or at *http://dms.dot.gov*.

This notice of receipt of applications for modification of exemptions is published in accordance with part 107 of the Federal hazardous materials transportation law (49 U.S.C. 5117(b); 49 CFR 1.53(b)).

Issued in Washington, DC, on January 25, 2002.

R. Ryan Posten,

Exemptions Program Officer, Office of Hazardous Materials, Exemptions and Approvals.

Application No.	Docket No.	Applicant	Modification of Exemption
7657–M		Welker Engineering Company, SugarLand, TX (see Footnote 1)	7657
9221–M		Applied Companies, Valencia, CA (See Footnote 2)	9221
9880–M		GE Reuter-Stokes, Twinsburg, OH (See Footnote 3)	9880
9940–M		GE Reuter-Stokes, Twinsburg, OH (See Footnote 4)	9940
11316–M		TRW Automotive Occupant Safety Systems, Queen Creek, AZ (See Footnote 5)	11316
11803–M		Chart, Inc. (Storage Systems Div.), Plaistow, NH (See Footnote 6)	11803
12339–M	RSPA–99–6201	Air Products and Chemicals, Inc., Allentown, PA (See Footnote 7)	12339
12866–M	RSPA–01–11096	Delta Air Lines (Technical Operations Center), Atlanta, GA (See Footnote 8)	12866
12885–M	RSPA–01–11209	United States Dept. of Agriculture, Missoula, MT (See Footnote 9)	12885

(1) To modify the exemption to authorize the transportation of an additional Division 2.3 material in non-DOT specification cylinders.

(2) To modify the exemption to authorize cargo vessels as an additional mode for transporting Division 2.2 materials in non-DOT specification stainless steel cylinders.

(3) To modify the exemption to authorize the transportation of an additional Division 2.2 material in non-DOT specification containers described as hermetically sealed electron tube devices.

(4) To modify the exemptions to authorize the transportation of an additional 2.2 materials in non-DOT specification containers described as hermetically sealed electron tube devices.

(5) To modify the exemption to authorize the transportation of a Division 1.4G and additional 1.4S material for shipment to additional TRW facilities and to increase quantity of power devices or igniters per tray from 16 to 36.

(6) To modify the exemption to authorize an increase of the maximum gross weight on rail from 263,000 lbs. to 286,000 lbs. for the transportation of Division 2.2 materials in DOT Specification tank cars.

(7) To modify the exemption to authorize the transportation of an additional Division 2.3 material in DOT Specification 3AL aluminum cylinders via cargo vessel.

(8) To reissue the exemption orginally issued on an emergency basis and to remove certain special provisions/requirements for the non-DOT specification cylinders containing Division 2.2 materials that have inadvertently been mis-marked.

(9) To reissue the exemption orginally issued on an emergency basis for the transportation of gasoline in a non-DOT specification steel drum with a pump installed mounted in a helitorch frame.

[FR Doc. 02–2353 Filed 1–30–02; 8:45 am]

BILLING CODE 4910–60–M

DEPARTMENT OF THE TREASURY

Internal Revenue Service

[REG–242282–97]

Proposed Collection: Comment Request for Regulation Project

AGENCY: Internal Revenue Service (IRS), Treasury.

ACTION: Notice and request for comments.

SUMMARY: The Department of the Treasury, as part of its continuing effort to reduce paperwork and respondent burden, invites the general public and other Federal agencies to take this opportunity to comment on proposed and/or continuing information collections, as required by the Paperwork Reduction Act of 1995, Public Law 104–13(44 U.S.C. 3506(c)(2)(A)). Currently, the IRS is soliciting comments concerning an existing final regulation, REG–242282–97 (TD 8734), General Revision of Regulations Relating to Withholding of Tax On Certain U.S. Source Income Paid to Foreign Persons and Related Collection, Refunds and Credits; Revision of Information Reporting and Backup Withholding Regulations; and Removal of Regulations Under Part 35a and of Certain Regulations Under Income Tax Treaties (1.1441–1(e), 1.1441–4(a)(2), 1.1441–4(b)(1) and (2), 1.1441–4(c), (d), and (e), 1.1441–5(b)(2)(ii), 1.1441–5(c)(1), 1.1441–6(b) and (c), 1.1441–8(b), 1.1441–9(b), 1.1461–1(b) and (c), 301.6114–1, 301.6402–3(e), and 31.3401(a)(6)–1(e)).

DATES: Written comments should be received on or before April 1, 2002, to be assured of consideration.

ADDRESSES: Direct all written comments to George Freeland, Internal Revenue Service, room 5244, 1111 Constitution Avenue, NW., Washington, DC 20224.

FOR FURTHER INFORMATION CONTACT: Requests for additional information or copies of the regulation should be directed to Larnice Mack, (202) 622–3179, or through the internet (*Larnice.Mack@irs.gov*), Internal Revenue Service, room 5244, 1111 Constitution Avenue, NW., Washington, DC 20224.

SUPPLEMENTARY INFORMATION:

Title: General Revision of Regulations Relating to Withholding of Tax on Certain U.S. Source Income Paid to Foreign Persons and Related Collection, Refunds and Credits; Revision of Information Reporting and Backup Withholding Regulations; and Removal of Regulations Under Part 35a and of Certain Regulations Under Income Tax Treaties.

OMB Number: 1545–1484.

Regulation Project Number: REG–242282–97 (formerly INTL–62–90; INTL–32–93; INTL–52–86; INTL–52–94).

Abstract: This regulation prescribes collections of information for foreign persons that received payments subject to withholding under sections 1441, 1442, 1443, or 6114 of the Internal Revenue Code. This information is used to claim foreign person status and, in appropriate cases, to claim residence in a country with which the United States has an income tax treaty in effect, so that withholding at a reduced rate of tax may be obtained at source. The regulation also prescribes collections of information for withholding agents. This information is used by withholding agents to report to the IRS income paid to a foreign person that is subject to withholding under Code sections 1441, 1442, and 1443. The regulation also requires that a foreign taxpayer claiming a reduced amount of withholding tax under the provisions of an income tax treaty must disclose its reliance upon a treaty provision by filing Form 8833 with its U.S. income tax return.

Current Actions: There is no change to this existing regulation.

Type of Review: Extension of a currently approved collection.

Affected Public: Business or other for-profit organizations, individuals or households, not-for-profit institutions, farms, and Federal, state, local or tribal governments.

The burden for the reporting requirements is reflected in the burden of Forms W–8BEN, W08ECI, W–8EXP,

W–8IMY, 1042, 1042S, 8233, 8833, and the income tax return of a foreign person filed for purposes of claiming a refund of tax.

An agency may not conduct or sponsor, and a person is not required to respond to, a collection of information unless the collection of information displays a valid OMB control number. Books or records relating to a collection of information must be retained as long as their contents may become material in the administration of any internal revenue law. Generally, tax returns and tax return information are confidential, as required by 26 U.S.C. 6103.

Request for Comments: Comments submitted in response to this notice will be summarized and/or included in the request for OMB approval. All comments will become a matter of public record. Comments are invited on: (a) Whether the collection of information is necessary for the proper performance of the functions of the agency, including whether the information shall have practical utility; (b) the accuracy of the agency's estimate of the burden of the collection of information; (c) ways to enhance the quality, utility, and clarity of the information to be collected; (d) ways to minimize the burden of the collection of information on respondents, including through the use of automated collection techniques or other forms of information technology; and (e) estimates of capital or start-up costs and costs of operation, maintenance, and purchase of services to provide information.

Approved: January 24, 2002.

George Freeland,

IRS Reports Clearance Officer.

[FR Doc. 02–2418 Filed 1–30–02; 8:45 am]

BILLING CODE 4830–01–P

DEPARTMENT OF THE TREASURY

Office of Thrift Supervision

Submission for OMB Review; Comment Request

AGENCY: Office of Thrift Supervision (OTS), Treasury.

ACTION: Notice and request for comment.

SUMMARY: The proposed information collection requirement described below has been submitted to the Office of Management and Budget (OMB) for review, as required by the Paperwork Reduction Act of 1995. OTS is soliciting public comments on the proposal.

DATES: Submit written comments on or before March 4, 2002.

ADDRESSES: Send comments, referring to the collection by title of the proposal or by OMB approval number, to OMB and OTS at these addresses: Alexander Hunt, Office of Information and Regulatory Affairs, Office of Management and Budget, Room 10202, New Executive Office Building, Washington, DC 20503, or e-mail to *ahunt@omb.eop.gov;* and Information Collection Comments, Chief Counsel's Office, Office of Thrift Supervision, 1700 G Street, NW., Washington, DC 20552, fax to (202) 906–6518, or e-mail to *infocollection.comments@ots.treas.gov.* OTS will post comments and the related index on the OTS Internet Site at *www.ots.treas.gov.* In addition, interested persons may inspect comments at the Public Reading Room, 1700 G Street, NW., by appointment. To make an appointment, call (202) 906–5922, send an e-mail to *publicinfo@ots.treas.gov*, or send a facsimile transmission to (202) 906–7755.

FOR FURTHER INFORMATION CONTACT: To obtain a copy of the submission to OMB, contact Sally W. Watts at *sally.watts@ots.treas.gov*, (202) 906–7380, or facsimile number (202) 906–6518, Regulations and Legislation Division, Chief Counsel's Office, Office of Thrift Supervision, 1700 G Street, NW., Washington, DC 20552.

SUPPLEMENTARY INFORMATION: OTS may not conduct or sponsor an information collection, and respondents are not required to respond to an information collection, unless the information collection displays a currently valid OMB control number. As part of the approval process, we invite comments on the following information collection.

Title of Proposal: Minority Thrift Certification Form.

OMB Number: 1550–0096.

Form Number: OTS Form 1661.

Description: This information is needed to help OTS remain a reliable source of information regarding the universe of minority-owned thrifts, in accordance with our responsibilities under Section 308 of the Financial Information Reform, Recovery and Enforcement Act of 1989 (12 U.S.C. 1463 note).

Type of Review: Renewal.

Affected Public: Savings Associations.

Estimated Number of Respondents: 32.

Estimated Frequency of Response: Annually.

Estimated Burden Hours per Response: .5 hours.

Estimated Total Burden: 16 hours.

Clearance Officer: Sally W. Watts, (202) 906–7380, Office of Thrift Supervision, 1700 G Street, NW., Washington, DC 20552.

OMB Reviewer: Alexander Hunt, (202) 395–7860, Office of Management and Budget, Room 10202, New Executive Office Building, Washington, DC 20503.

Dated: January 24, 2002.

Deborah Dakin,

Deputy Chief Counsel, Regulations and Legislation Division.

[FR Doc. 02–2320 Filed 1–30–02; 8:45 am]

BILLING CODE 6720–01–P

DEPARTMENT OF VETERANS AFFAIRS

Means Test Thresholds

AGENCY: Department of Veterans Affairs.

ACTION: Notice.

SUMMARY: As required by law, the Department of Veterans Affairs (VA) is hereby giving notice of cost-of-living adjustments (COLA) for means test income limitations. These adjustments are based on the rise in the Consumer Price Index (CPI) during the one-year period ending September 30, 2001.

DATES: These rates are effective January 1, 2002.

FOR FURTHER INFORMATION CONTACT: Roscoe Butler, Chief Policy and Operations, Health Administration Service, (10C3), Veterans Health Administration, VA, 810 Vermont Avenue, NW., Washington, DC 20420, (202) 273–8302. (This is not a toll-free number.)

SUPPLEMENTARY INFORMATION: On January 1 of each year, the Secretary is authorized under Title 38 United States Code, section 1722 to increase the means test income threshold levels by the same percentage the maximum rates of pension benefits were increased under section 5312(a) during the preceding calendar year. The means test income thresholds are used by the Veterans Health Administration (VHA) to determine whether a veteran must agree to pay a copayment for hospital and outpatient medical care services. Based on a 2.6 percent increase in Pension Benefits effective December 1, 2001, and in accordance with 38 CFR 3.29, the following income limitations for the Means Test Thresholds will be effective January 1, 2002.

Table 1—Means Test Thresholds

(1) Veterans with no dependents:
(a) Below Means Test Threshold: $24,304
(a) Above Means Test Threshold: $24,305
(2) Veterans with 1 dependent:
(a) Below Means Test Threshold: $29,168
(a) Above Means Test Threshold: $29,169
(3) Veterans with 2 dependents:
(a) Below Means Test Threshold: $30,798
(a) Above Means Test Threshold: $30,799

(4) Veterans with 3 dependents:
(a) Below Means Test Threshold: $32,428
(a) Above Means Test Threshold: $32,429
(5) Veterans with 4 dependents:
(a) Above Means Test Threshold: $34,058
(a) Below Means Test Threshold: $34,059
(6) Veterans with 5 dependents:
(a) Above Means Test Threshold: $35,688
(a) Below Means Test Threshold: $35,689
(7) Child Income Exclusion is: $7,450
(8) The Medicare deductible is $812
(9) Maximum annual Rate of Pension effective 12/1/2001 are:
(a) The base rate is $9,556
(b) The base rate with one dependent is $12,516
(c) Add $1,630 for each additional dependent above 5

Below the Means Test Threshold is defined as those veterans whose attributable income and net worth is such that they are unable to defray the expenses of care and therefore are not subject to copay charges for hospital and outpatient medical services.

Above the Means Test Threshold is defined as those veterans whose attributable income and net worth is such that they are able to defray the expenses of care and must agree to pay a copayment for hospital care and outpatient medical services.

Dated: January 23, 2002.

Anthony J. Principi,

Secretary of Veterans Affairs.

[FR Doc. 02–2365 Filed 1–30–02; 8:45 am]

BILLING CODE 8320–01–P

Notices

Federal Register

Vol. 67, No. 21

Thursday, January 31, 2002

This section of the FEDERAL REGISTER contains documents other than rules or proposed rules that are applicable to the public. Notices of hearings and investigations, committee meetings, agency decisions and rulings, delegations of authority, filing of petitions and applications and agency statements of organization and functions are examples of documents appearing in this section.

DEPARTMENT OF AGRICULTURE

Forest Service

Vegetation Management for Reforestation

AGENCY: Forest Service, USDA.

ACTION: Notice of intent to prepare a supplemental environmental impact statement.

SUMMARY: The Department of Agriculture, Forest Service, Pacific Southwest Region (Region) will prepare a supplemental environmental impact statement (SEIS) to the Region's 1988 EIS ''Vegetation Management for Reforestation'' as directed by the Court in a recent United States District Court Decision in *Californians for Alternatives to Toxics, Et Al.* v. *Michael Dombeck, Et Al.,* CIV. S–00–2016 LKK/JFM. This SEIS will analyze environmental effects at the programmatic level on animal endrocrine disruption, immunotoxicity, and neurotoxicity, associated with the use of the herbicides glyphosate and triclopyr during reforestation projects in the Region.

DATES: The public is not asked to provide any additional information at this time. A draft SEIS will be circulated for public review in March, 2002. The comment period for the draft SEIS will extend 45 days from the date its availability is published in the **Federal Register** and the Sacramento Bee, the Newspaper of Record. A final SEIS is expected to be released in May, 2002.

FOR FURTHER INFORMATION CONTACT: John Fiske, Team Leader, USDA Forest Service, 1323 Club Drive, Vallejo, CA 94592. Phone number (707) 562–8687.

SUPPLEMENTARY INFORMATION:

Background

The Region prepared a final programmatic EIS ''Vegetation Management for Reforestation'' in December, 1988, and issued a Record of Decision (ROD) in February, 1989. The EIS analyzed and disclosed environmental effects of eight alternatives, six of which involved application of up to thirteen different herbicides, including glyphosate and triclopyr. The selected alternative in the ROD established broad Regional policy as to methods that may be used to control competing vegetation during reforestation projects. This policy permits consideration of all methods at the project-specific planning level, but requires that herbicides be used only where essential to achieve the project-specific resource management objectives. This policy reflected National USDA policy at that time. The ROD also established specific restrictions on uses of certain herbicides.

A recent Court decision, based on a lawsuit filed by the Californians for Alternatives to Toxics and two other organizations opposing implementation of the Cottonwood Fire Vegetation Management Project (Sierraville Ranger District, Tahoe National Forest), ordered the Forest Service to supplement this programmatic EIS to disclose specific environmental effects. These effects are endrocrine disruption, immunotoxicity, and neurotoxicity in humans and other animals, associated with the use of glyphosate and triclopyr during reforestation projects in the Region.

Proposed Action

The Forest Service proposes to Supplement the EIS, as directed by the Court.

Scoping Process

This Notice of Intent will not initiate an additional scoping process. The Judge's Order in *Californians for Alternatives to Toxics, Et Al.* v. *Michael Dombeck, Et Al.,* CIV. S–00–2016 LKK/JFM identified the scope of the draft SEIS. No additional public comment is invited on this proposal to prepare the draft SEIS.

Decision To Be Made and Responsible Official

The Regional Forester, Pacific Southwest Region, will decide whether, and if so how, to revise the ROD for the EIS.

The responsible official is the Regional Forester, 1323 Club Drive, Vallejo, California 94592.

Coordination With Other Agencies

The Forest Service is the lead agency with the responsibility to prepare this draft SEIS. Other agencies and local governments will be invited to participate, as appropriate.

Commenting

A draft SEIS is expected to be available for public review and comment in March, 2002. The comment period for the draft SEIS will extend 45 days from the date its availability is published in the **Federal Register** and in the Sacramento Bee, the Newspaper of Record.

Comments received on the draft SEIS, including names and addresses of those who comment, will be considered part of the public record for this proposed action, and will be available for public inspection. Additionally, pursuant to 7 CFR 1.27(d), any persons may request the agency to withhold a submission from the public record by showing how the Freedom of Information (FOIA) permits such confidentiality. Persons requesting such confidentiality should be aware that, under the FOIA, confidentiality may be granted in only very limited circumstances, such as to protect trade secrets. The Forest Service will inform the requester of the Agency's decision regarding the request for confidentiality, and where the request is denied, the Agency will return the submission and notify the requester that the comments may be resubmitted with or without name and address.

The Forest Service believes that it is important to give reviewers notice of several court rulings related to public participation in the environmental review process. First, reviews of draft environmental impact statements must structure their participation in the environmental review of the proposal so that it is meaningful and alerts the agency to the reviewer's position and contentions. *Vermont Yankee Nuclear Power Corp.* v. *NRDC,* 435 U.S. 519, 533 (1978). Also, environmental objections that could be raised at the draft environmental impact statement stage, but that are not raised until after completion of the final environmental impact statement, may be waived or dismissed by the courts. *City of Angoon* v. *Hodel,* 803 F.2d 1016, 1022 (9th Cir. 1986) and *Wisconsin Heritage, Inc.* v. *Harris,* 490 F. Supp. 1334 (E.D. Wis.

1980). Because of these court rulings, it is very important that those interested in this proposed action participate by the close of the 45-day comment period so that substantive comments and objections are made available to the Forest Service at a time when the Agency can meaningfully consider them and respond to them in the final supplemental environmental impact statement.

Comments on the draft SEIS should be as specific as possible. It is also helpful if comments refer to specific pages or chapters of the draft supplemental statement. Comments may also address the adequacy of the draft SEIS. Reviewers may wish to refer to the Council on Environmental Quality Regulations for implementing the procedural provisions of the National Environmental Policy Act at 40 CFR 1503.3 in addressing these points.

Dated: January 24, 2002.

Jack A. Blackwell,

Regional Forester, Pacific Southwest Region.

[FR Doc. 02–2310 Filed 1–30–02; 8:45 am]

BILLING CODE 3410–11–M

DEPARTMENT OF AGRICULTURE

Forest Service

Olympic Provincial Advisory Committee

AGENCY: Forest Service, USDA.

ACTION: Notice of meeting.

SUMMARY: The Olympic Province Advisory Committee (OPAC) will meet on February 22, 2002. The meeting will be held at the Jamestown S'Klallam Tribal Center in Blyn, Washington. The meeting will begin at 9 a.m. and end at approximately 3 p.m. Agenda topics are: (1) Current status of key Forest issues; (2) Status update on the Resource Advisory Committees for Rural Schools and Community Self-Determination Act of 2000; (3) Vacant committee positions; (4) Open forum; and (5) Public comments.

All Olympic Province Advisory Committee Meetings are open to the public. Interested citizens are encourage to attend.

FOR FURTHER INFORMATION CONTACT: Direct questions regarding this meeting to Ken Eldredge, Province Liaison, USDA, Olympic National Forest Headquarters, 1835 Black Lake Blvd. Olympia, WA 98512–5623, (360) 956–2323 or Dale Hom, Forest Supervisor, at (360) 956–2301.

Dated: January 22, 2002.

Dale Hom,

Forest Supervisor, Olympic National Forest.

[FR Doc. 02–2305 Filed 1–30–02; 8:45 am]

BILLING CODE 3410–11–M

DEPARTMENT OF AGRICULTURE

Forest Service

Fresno County Resource Advisory Committee

AGENCY: Forest Service, USDA.

ACTION: Notice of Resource Advisory meeting.

SUMMARY: Pursuant to the authorities in the Federal Advisory Committee Act of 1972 (Pub. L. 92–463) and under the secure Rural Schools and Community Self-Determination Act of 2000 (Public Law 106–393) the Sierra and Sequoia National Forests' Resource Advisory Committee (RAC) for Fresno County will meet on February 19, 2002, 6:30–9:30 p.m. The Fresno County Resource Advisory Committee will meet at the Forest Supervisor's office Clovis, CA. The purpose of the meeting is for the Resource Advisory Committee to receive project proposals for recommendations to the Forest Supervisor for expenditure of Fresno County Title II funds.

DATES: The Fresno RAC meeting will be held on February 19, 2002. The meeting will be held from 6:30 p.m. to 3:30 p.m.

ADDRESSES: The Fresno County RAC meeting will be held at the Sierra National Forest Supervisor's office, 1600 Tollhouse Road, CA.

FOR FURTHER INFORMATION CONTACT: Sue Exline, USDA, Sierra National Forest, 1600 Tollhouse Road, Clovis, CA 93611, (559) 297–0706 ext. 4804; E-MAIL *skexline@fs.fed.us.*

SUPPLEMENTARY INFORMATION: Agenda items to be covered include: (1) Review and approve the Jan. 12, 2002 meeting notes; (2) Review the purpose of the RAC; (3) Consideration of Title II Project proposals from the public, the RAC members, the Pineridge/Kings River Districts Ranger; and the Hume Lake District Ranger; (4) Determine the date and location of the next meeting; (5) Public comment. The meeting is open to the public. Public input opportunity will be provided and individuals will have the opportunity to address the Committee at that time.

Dated: January 23, 2002.

Ray Porter,

District Ranger.

[FR Doc. 02–2285 Filed 1–30–02; 8:45 am]

BILLING CODE 3410–11–M

DEPARTMENT OF AGRICULTURE

Forest Service

North Gifford Pinchot National Forest Resource Advisory Committee Meeting Notice

AGENCY: Forest Service, USDA.

ACTION: Notice of meeting.

SUMMARY: The North Gifford Pinchot National Forest Resource Advisory Committee will meet on Tuesday, February 12, 2002, at the Lewis County Law and Justice Center (old county annex building), 345 West Main Street, Chehalis, Washington. The meeting will begin at 10 a.m. and continue until 5 p.m. The purpose of the meeting is to:

(1) Consider staffing needs,

(2) Discuss the project approval process, and

(3) Provide for a Public Open Forum.

All North Gifford Pinchot National Forest Resource Advisory Committee meetings are open to the public. Interested citizens are encouraged to attend. The ''open forum'' provides opportunity for the public to bring issues, concerns, and discussion topics to the Advisory Committee. The ''open forum'' is scheduled as part of agenda item (3) for this meeting. Interested speakers will need to register prior to the open forum period. The committee welcomes the public's written comments on committee business at any time.

FOR FURTHER INFORMATION CONTACT: Direct questions regarding this meeting to Tom Knappenberger, Public Officer, at (360) 891–5005, or written Forest Headquarters Office, Gifford Pinchot National Forest, 10600 NE. 51st Circle, Vancouver, WA 98682.

Dated: January 25, 2002.

Claire Lavendel,

Forest Supervisor.

[FR Doc. 02–2311 Filed 1–30–02; 8:45 am]

BILLING CODE 3410–11–M

DEPARTMENT OF AGRICULTURE

Forest Service

South Gifford Pinchot National Forest Resource Advisory Committee Meeting Notice

AGENCY: Forest Service, USDA.

ACTION: Notice of meeting.

SUMMARY: The South Gifford Pinchot National Forest Resource Advisory Committee will meet on Thursday, February 14, 2002, at the Skamania County Public Works Department basement located in the Courthouse

Annex, 170 N.W. Vancouver Avenue, Stevenson, Washington. The meeting will begin at 10 a.m. and continue until 5 p.m. The purpose of the meeting is to:

(1) Consider staffing needs,

(2) Discuss the project approval process, and

(3) Provide for a Public Open Forum.

All South Gifford Pinchot National Forest Resource Advisory Committee meetings are open to the public. Interested citizens are encouraged to attend. The ''open forum'' provides opportunity for the public to bring issues, concerns, and discussion topics to the Advisory Committee. The ''open forum'' is scheduled as part of agenda item (3) for this meeting. Interested speakers will need to register prior to the open forum period. The committee welcomes the public's written comments on committee business at any time.

FOR FURTHER INFORMATION CONTACT: Direct questions regarding this meeting to Tom Knappenberger, Public Affairs Officer, at (360) 891–5005, or write Forest Headquarters Office, Gifford Pinchot National Forest, 10600 NE. 51st Circle, Vancouver, WA 98682.

Dated: January 25, 2002.

Claire Lavendel,

Forest Supervisor.

[FR Doc. 02–2312 Filed 1–30–02; 8:45 am]

BILLING CODE 3410–11–M

DEPARTMENT OF AGRICULTURE

Forest Service

Hood/Willamette Resource Advisory Committee

AGENCY: Forest Service, USDA.

ACTION: Action of meeting.

SUMMARY: The Hood/Willamette Resource Advisory Committee (RAC) will meet on Thursday, February 21, 2002. The meeting is scheduled to begin at 9 a.m. and will conclude at approximately 5 p.m. The meeting will be held at the Wilsonville Chamber of Commerce and Clackamas County Regional Visitor Information Center; 29600 SW. Park Place; Wilsonville, Oregon 97070; (503) 682–0411. The tentative agenda includes: Process for Reviewing and Prioritizing Projects; Review of Title II Project Submissions; RAC Operating Expenses; Information Sharing; Public Forum.

The Public Forum is tentatively scheduled to begin at 4 p.m. Time allotted for individual presentations will be limited to 3–4 minutes. Written comments are encouraged, particularly if the material cannot be presented within the time limits for the Public Forum. Written comments may be submitted prior to the February 21st meeting by sending them to Designated Federal Official Donna Short at the address given below.

FOR FURTHER INFORMATION CONTACT: For more information regarding this meeting, contact Designated Federal Official Donna Short; Sweet Home Ranger District; 3225 Highway 20; Sweet Home, Oregon 97386; (541) 367–9220.

Dated: January 24, 2002.

Doris Tai,

Acting Deputy Forest Supervisor.

[FR Doc. 02–2313 Filed 1–30–02; 8:45 am]

BILLING CODE 3410–11–M

DEPARTMENT OF AGRICULTURE

Forest Service

Notice of Idaho Panhandle Resource Advisory Committee Meeting

AGENCY: Forest Service, USDA.

ACTION: Notice of meeting.

SUMMARY: Pursuant to the authorities in the Federal Advisory Committee Act (Pub. L. 92–463) and under the Secure Rural Schools and Community Self-Determination Act of 2000 (Pub. L. 106–393) the Idaho Panhandle National Forests' Idaho Panhandle Resource Advisory Committee will meet Friday, February 15, 2002, in Coeur d'Alene, Idaho for a business meeting. The meeting is open to the public.

DATES: February 15, 2002.

ADDRESSES: The meeting location is the Idaho Panhandle National Forests' Supervisor's Office, located at 3815 Schreiber Way, Coeur d'Alene, Idaho 83815.

FOR FURTHER INFORMATION CONTACT: Ranotta K. McNair, Forest Supervisor and Designated Federal Officer, at (208) 765–7223.

SUPPLEMENTARY INFORMATION: Agenda topics will include review of project proposals, developing criteria for project proposal review, finalizing the submission form for proposals and receiving public comment.

Dated: January 24, 2002.

Ranotta K. McNair,

Forest Supervisor.

[FR Doc. 02–2314 Filed 1–30–02; 8:45 am]

BILLING CODE 3410–11–M

DEPARTMENT OF AGRICULTURE

Natural Resources Conservation Service

Sixmile-St. Charles Watershed, Pueblo County, Colorado

AGENCY: Natural Resources Conservation Service, USDA.

ACTION: Notice of a Finding of No Significant Impact.

SUMMARY: Pursuant to Section 102(2) (C) of the National Environmental Policy Act of 1969; the Council on Environmental Quality Regulations (40 CFR part 1500); and the Natural Resources Conservation Service Regulations (7 CFR part 650); the Natural Resources Conservation Service, U.S. Department of Agriculture, gives notice that an environmental impact statement is not being prepared for the Sixmile-St. Charles Watershed Project, Pueblo County, Colorado.

FOR FURTHER INFORMATION CONTACT: Allen Green, State Conservationist, Natural Resources Conservation Service, 655 Parfet St., Lakewood, Colorado, 80215–5517, telephone (970) 544–2810.

SUPPLEMENTARY INFORMATION: The environmental assessment of this Federally assisted action indicates that the project will not cause significant local, regional, or national impacts on the environment. As a result of these findings, Allen Green, State Conservationist, has determined that the preparation and review of an environmental impact statement is not needed for this project.

The project purpose is to reduce nitrates, selenium, sediment and other pollutant loading to the Arkansas River due to ineffective irrigation water utilization. The planned works of improvement include on-farm underground irrigation pipelines, on-farm concrete irrigation ditches, and structures for water control. These enduring practices are accompanied by facilitating management practices such as Irrigation Water Management and Nutrient Management.

The Notice of a Finding of No Significant Impact (FNSI) has been forwarded to the Environmental Protection Agency and to various Federal, State and local agencies and interested parties. A limited number of copies of the FNSI are available to fill single copy requests at the above address. Basic data developed during the environmental assessment are on file and may be reviewed by contacting Allen Green.

No administration action on implementation of the proposal will be

taken until 30 days after the date of this publication in the **Federal Register**.

(This activity is listed in the Catalog of Federal Domestic Assistance under NO. 10904, Watershed Protection and Flood Prevention, and is subject to the provisions of Executive Order 12372, which requires intergovernmental consultation with State and local officials).

Dated: January 24, 2002.

Dennis Alexander,

Assistant State Conservationist.

[FR Doc. 02–2378 Filed 1–30–02; 8:45 am]

BILLING CODE 3410–16–P

COMMISSION ON CIVIL RIGHTS

Sunshine Act Notice

AGENCY: U.S. Commission on Civil Rights.

DATE AND TIME: Friday, February 8, 2002 9:30 a.m.

PLACE: U.S. Commission on Civil Rights, 624 Ninth Street, NW., Room 540, Washington, DC 20425.

STATUS:

Agenda

I. Approval of Agenda
II. Approval of Minutes of January 11, 2011 Meeting
III. Announcements
IV. Staff Director's Report
V. State Advisory Committee Appointments for Alabama, District of Columbia, Maryland, Virginia, and West Virginia
VI. Report from a Number of SAC Chairs About Activities in Their States
VII. Future Agenda Items

10 a.m.—Environmental Justice Hearing (Part II)

CONTACT PERSON FOR FURTHER INFORMATION: Les Jin, Press and Communications (202) 376–8312.

Debra A. Carr,

Deputy General Counsel.

[FR Doc. 02–2531 Filed 1–29–02; 2:17 pm]

BILLING CODE 6335–01–M

DEPARTMENT OF COMMERCE

International Trade Administration

[A–423–810]

Notice of Amended Preliminary Determination of Sales at Not Less Than Fair Value and Postponement of Final Determination: Structural Steel Beams From Luxembourg

AGENCY: Import Administration, International Trade Administration, U.S. Department of Commerce.

ACTION: Notice of amended preliminary determination of sales at not less than fair value.

EFFECTIVE DATE: January 31, 2002.

FOR FURTHER INFORMATION CONTACT: David J. Goldberger or Margarita Panayi, Import Administration, International Trade Administration, U.S. Department of Commerce, 14th Street and Constitution Avenue, NW., Washington, DC 20230; telephone: (202) 482–4136 or (202) 482–0049, respectively.

SUPPLEMENTARY INFORMATION:

The Applicable Statute

Unless otherwise indicated, all citations to the Tariff Act of 1930, as amended (''the Act''), are references to the provisions effective January 1, 1995, the effective date of the amendments made to the Act by the Uruguay Round Agreements Act (''URAA''). In addition, unless otherwise indicated, all citations to the Department of Commerce's (''Department's'') regulations are references to 19 CFR part 351 (April 2001).

Amended Preliminary Determination

We are amending the preliminary determination of sales at less than fair value for structural steel beams from Luxembourg to reflect the correction of ministerial errors made in the margin calculations in that determination. Correcting these errors results in an amended preliminary determination that sales were made at not less than fair value. We are publishing this amendment to the preliminary determination pursuant to 19 CFR 351.224(e).

Case History

On December 19, 2001, the Department preliminarily determined that structural steel beams from Luxembourg are being, or are likely to be, sold in the United States at less than fair value (63 FR 67223; December 28, 2001).

On January 2, 2002, we disclosed our calculations for the preliminary determination to counsel for ProfilARBED, S.A. (''ProfilaRBED'') and to counsel for petitioners.

On January 7, 2002, we received a submission, timely filed pursuant to 19 CFR 351.224(c)(2), from ProfilARBED alleging ministerial errors in the Department's preliminary determination. In its submission, ProfilARBED requested that these errors be corrected and an amended preliminary determination be issued reflecting these changes. We did not receive ministerial error allegations from the petitioners.

Amendment of Preliminary Determination

The Department's regulations provide that the Department will correct any significant ministerial error by amending the preliminary determination. *See* 19 CFR 351.224(e). A significant ministerial error is an error the correction of which, either singly or in combination with other errors: (1) Would result in a change of at least five absolute percentage points in, but not less than 25 percent of, the weighted-average dumping margin calculated in the original (erroneous) preliminary determination; or (2) would result in a difference between a weighted-average dumping margin of zero (or *de minimis*) and a weighted-average dumping margin of greater than *de minimis,* or vice versa. *See* 19 CFR 351.224(g).

After analyzing ProfilARBED's submission, we have determined that ministerial errors were made in the margin calculation for ProfilARBED in the preliminary determination. Specifically, (1) We inadvertently included imputed inventory carrying expenses in the calculation of the constructed export price (CEP) profit rate; (2) we inadvertently allocated CEP profit to indirect selling expenses and inventory carrying expenses incurred abroad; (3) we inadvertently deducted from CEP indirect selling expenses and inventory carrying expenses incurred abroad; (4) we did not apply an adjustment to the calculation of the variable cost of manufacturing in the third country market as discussed in the December 19, 2001, memorandum from the Office of Accounting; and (5) we inadvertently omitted billing adjustments from the calculation of the net third country market price used for normal value. *See* Memorandum to Louis Apple from The Team, dated January 16, 2002, for further discussion of ProfilARBED's ministerial errors allegations and the Department's analysis.

Pursuant to 19 CFR 351.224(g)(2), the ministerial errors acknowledged above for ProfilARBED are significant because the correction of the ministerial errors results in a difference between a weighted-average dumping margin of greater than *de minimis* and a weighted-average dumping margin of *de minimis.* Therefore, we have recalculated the margin for ProfilARBED. The Department hereby amends its preliminary determination with respect to ProfilARBED to correct these errors. In addition, as ProfilARBED is the sole respondent in this investigation, this preliminary determination is negative. Accordingly, we are terminating

suspension of liquidation of all entries of subject merchandise.

The revised weighted-average dumping margins are as follows:

Exporter/manufacturer	Weighted-average margin percentage
ProfilARBED	1.43 (*de minimis*)

Postponement of Final Determination

Pursuant to section 735(a)(2)(B) of the Act, on December 18, 2001, the petitioners requested that, in the event of a negative preliminary determination in this investigation, the Department postpone its final determination until not later than 135 days after the date of the publication of the preliminary determination in the **Federal Register**. In accordance with 19 CFR 351.210(b)(i), because our amended preliminary determination is negative and no compelling reasons for denial exist, we are granting the petitioners' request and are postponing the final determination until no later than 135 days after the publication of the Department's original preliminary determination notice in the **Federal Register** on December 28, 2002.

Suspension of Liquidation

We will instruct the Customs Service to terminate the suspension of liquidation of all entries of structural steel beams from Luxembourg, including those entries exported by ProfilARBED, and release any cash deposits, bonds, or other securities posted. These instructions will remain in effect until further notice.

International Trade Commission Notification

In accordance with section 733(f) of the Act, we have notified the International Trade Commission (''ITC'') of the amended preliminary determination. As a result of this amended preliminary determination, if our final determination is affirmative, the ITC will determine within 75 days, rather than 45 days, of our final determination whether these imports are materially injuring, or threaten material injury to, the U.S. industry.

This amended preliminary determination is published pursuant to section 777(i)(1) of the Act and 19 CFR 351.224(e).

Dated: January 24, 2002.

Faryar Shirzad,

Assistant Secretary for Import Administration.

[FR Doc. 02–2411 Filed 1–30–02; 8:45 am]

BILLING CODE 3510–DS–P

DEPARTMENT OF COMMERCE

International Trade Administration

[A–583–838]

Notice of Amended Preliminary Determination of Sales at Less Than Fair Value: Structural Steel Beams From Taiwan

AGENCY: Import Administration, International Trade Administration, Department of Commerce.

ACTION: Notice of amended preliminary determination of sales at less than fair value.

EFFECTIVE DATE: January 31, 2002.

FOR FURTHER INFORMATION CONTACT: Kate Johnson or Rebecca Trainor, Import Administration, International Trade Administration, U.S. Department of Commerce, 14th Street and Constitution Avenue, NW., Washington, DC 20230; telephone: (202) 482–4929 or (202) 482–4007, respectively.

SUPPLEMENTARY INFORMATION: Unless otherwise indicated, all citations to the Tariff Act of 1930, as amended (the Act), are references to the provisions effective January 1, 1995, the effective date of the amendments made to the Act by the Uruguay Round Agreements Act. In addition, unless otherwise indicated, all citations to the Department of Commerce's (the Department's) regulations are references to 19 CFR part 351 (April 2001).

Amended Preliminary Determination

We are amending the preliminary determination of sales at less than fair value for structural steel beams from Taiwan to reflect the correction of a ministerial error made in the margin calculations in that determination. We are publishing this amendment to the preliminary determination pursuant to 19 CFR 351.224(e).

Case History

On December 19, 2001, the Department preliminarily determined that structural steel beams from Taiwan are being, or are likely to be, sold in the United States at less than fair value (66 FR 67202, December 28, 2001).

On December 20 and 27, 2001, we disclosed our calculations for the preliminary determination to counsel for Tung Ho Steel Enterprise Corp. (Tung Ho) and Kuei Yi Industrial Co., Ltd. (Kuei Yi), respectively. On January 2, 2002, we disclosed our calculations to counsel for the petitioners.

On January 7, 2002, we received a submission, timely filed pursuant to 19 CFR 351.224(c)(2), from the petitioners alleging a ministerial error in the Department's preliminary determination. In their submission, the petitioners stated that the correction of this error would result in a significant change in the Department's preliminary determination. We did not receive ministerial error allegations from either respondent.

Amendment of Preliminary Determination

The Department's regulations provide that the Department will correct any significant ministerial error by amending the preliminary determination. *See* 19 CFR 351.224(e). A significant ministerial error is an error the correction of which, either singly or in combination with other errors: (1) Would result in a change of at least five absolute percentage points in, but not less than 25 percent of, the weighted-average dumping margin calculated in the original (erroneous) preliminary determination; or (2) would result in a difference between a weighted-average dumping margin of zero (or *de minimis*) and a weighted-average dumping margin of greater than *de minimis,* or vice versa. *See* 19 CFR 351.224(g).

After analyzing the petitioners' submission, we have determined that a ministerial error was made in the margin calculation for Kuei Yi in the preliminary determination. Specifically, we inadvertently failed to convert Kuei Yi's home market discounts and rebates into U.S. dollars for the calculation of home market net unit price.

Pursuant to 19 CFR 351.224(g)(1), the ministerial error acknowledged above for Kuei Yi is significant because the correction of the ministerial error results in a change of at least five absolute percentage points in, but not less than 25 percent of, the weighted-average dumping margin calculated in the original preliminary determination. Therefore, we have recalculated the margin for Kuei Yi. In addition, we have recalculated the ''All Others Rate.'' The Department hereby amends its preliminary determination with respect to Kuei Yi to correct this error.

The revised weighted-average dumping margins are as follows:

Exporter/manufacturer	Weighted-average margin margin percentage
Kuei Yi Industrial Co., Ltd	34.56
All Others	25.45

Suspension of Liquidation

In accordance with section 733(d)(2) of the Act, the Department will direct

the Customs Service to continue to suspend liquidation of all entries of structural steel beams from Taiwan that are entered, or withdrawn from warehouse, for consumption, on or after the date of publication of this notice in the **Federal Register**. The Customs Service shall continue to require a cash deposit or the posting of a bond equal to the estimated amount by which the normal value exceeds the U.S. price as shown above. These instructions will remain in effect until further notice.

International Trade Commission Notification

In accordance with section 733(f) of the Act, we have notified the International Trade Commission of the amended preliminary determination.

This amended preliminary determination is published pursuant to section 777(i) of the Act and 19 CFR 351.224(e).

Dated: January 24, 2002.

Faryar Shirzad,

Assistant Secretary for Import Administration.

[FR Doc. 02–2412 Filed 1–30–02; 8:45 am]

BILLING CODE 3510–DS–P

DEPARTMENT OF COMMERCE

International Trade Administration

[A–428–831]

Notice of Amended Preliminary Determination of Sales at Less Than Fair Value: Structural Steel Beams From Germany

AGENCY: Import Administration, International Trade Administration, Department of Commerce.

ACTION: Notice of amended preliminary antidumping duty determination of sales at less than fair value: structural steel beams from Germany.

EFFECTIVE DATE: January 31, 2002.

FOR FURTHER INFORMATION CONTACT: Thomas Schauer or Edythe Artman, Import Administration, International Trade Administration, U.S. Department of Commerce, 14th Street and Constitution Avenue, NW., Washington, DC 20230; telephone: (202) 482–0410 or (202) 482–3931, respectively.

The Applicable Statute and Regulations

Unless otherwise indicated, all citations to the statute are references to the provisions effective January 1, 1995, the effective date of the amendments made to the Tariff Act of 1930 (the Act) by the Uruguay Round Agreements Act (URAA). In addition, unless otherwise indicated, all citations to the Department of Commerce's (the Department's) regulations are to the provisions codified at 19 CFR part 351 (2001).

Significant Ministerial Error

The Department of Commerce (the Department) is amending the preliminary determination of sales at less than fair value in the antidumping duty investigation of structural steel beams from Germany to reflect the correction of a significant ministerial error made in the margin calculations regarding Stahlwerk Thüringen GmbH (''SWT'') in that determination, pursuant to 19 CFR 341.224(g)(1) and (g)(2). A ministerial error is defined as an error in addition, subtraction, or other arithmetic function, clerical error resulting from inaccurate copying, duplication, or the like, and any other similar type of unintentional error which the Secretary considers ministerial. See 19 CFR 351.224(f). A significant ministerial error is defined as an error, the correction of which, singly or in combination with other errors, would result in (1) a change of at least five absolute percentage points in, but not less than 25 percent of, the weighted-average dumping margin calculated in the original (erroneous) preliminary determination; or (2) a difference between a weighted-average dumping margin of zero or *de minimis* and a weighted-average dumping margin of greater than *de minimis* or vice versa. See 19 CFR 351.224(g). In this case, correction of the ministerial error results in SWT's margin becoming *de minimis*. We are publishing this amendment to the preliminary determination pursuant to 19 CFR 351.224(e). As a result of this amended preliminary determination, we have revised the antidumping rates for one respondent, SWT.

Scope of Investigation

The scope of this investigation covers doubly-symmetric shapes, whether hot- or cold-rolled, drawn, extruded, formed or finished, having at least one dimension of at least 80 mm (3.2 inches or more), whether of carbon or alloy (other than stainless) steel, and whether or not drilled, punched, notched, painted, coated, or clad. These structural steel beams include, but are not limited to, wide-flange beams (''W'' shapes), bearing piles (''HP'' shapes), standard beams (''S'' or ''I'' shapes), and M-shapes. All the products that meet the physical and metallurgical descriptions provided above are within the scope of this investigation unless otherwise excluded. The following products are outside and/or specifically excluded from the scope of this investigation: (1) Structural steel beams greater than 400 pounds per linear foot, (2) structural steel beams that have a web or section height (also known as depth) over 40 inches, and (3) structural steel beams that have additional weldments, connectors or attachments to I-sections, H-sections, or pilings; however, if the only additional weldment, connector or attachment on the beam is a shipping brace attached to maintain stability during transportation, the beam is not removed from the scope definition by reason of such additional weldment, connector or attachment.

The merchandise subject to this investigation is classified in the Harmonized Tariff Schedule of the United States (''HTSUS'') at subheadings 7216.32.0000, 7216.33.0030, 7216.33.0060, 7216.33.0090, 7216.50.0000, 7216.61.0000, 7216.69.0000, 7216.91.0000, 7216.99.0000, 7228.70.3040, and 7228.70.6000. Although the HTSUS subheadings are provided for convenience and customs purposes, the written description of the merchandise under investigation is dispositive.

Ministerial-Error Allegation

On December 19, 2001, the Department issued its affirmative preliminary determination in this proceeding. See *Notice of Preliminary Determination of Sales at Less Than Fair Value and Postponement of Final Determination: Structural Steel Beams from Germany,* 66 FR 67190 (December 28, 2001) (*Preliminary Determination*). There are two respondent manufacturers/exporters, SWT and Salzgitter AG, in this investigation.

On January 2, 2002, the Department received timely allegations of a ministerial error (in accordance with section 351.224(c)(2) of the Department's regulations) in the *Preliminary Determination* from SWT. SWT alleged that the Department inadvertently did not convert quantity adjustments for U.S. sales from pounds to metric tons. On January 7, 2002, the Department received timely allegations of ministerial errors (in accordance with 351.224(c)(2)) in the *Preliminary Determination* from the Committee for Fair Beam Imports and its individual members, Northwestern Steel and Wire Company, Nucor Corporation, Nucor-Yamato Steel Company, and TXI-Chaparral Steel Company (''the petitioners''). The petitioners alleged that (1) the Department's language for converting quantities denominated in pounds to metric tons is superfluous

and (2) the Department's calculation of indirect selling expenses is incorrect because, according to the petitioners, the Department attempted to correct for double-counting where none exists.

The Department has reviewed its preliminary calculations and agrees that the error which SWT alleged does constitute a ministerial error within the meaning of 19 CFR 351.224(f). Furthermore, we determine that this is a ministerial error which rises to the level of ''significant errors'' pursuant to 19 CFR 351.224(g)(2), and we are amending the *Preliminary Determination* to reflect the correction of this significant ministerial error made in the margin calculation for SWT in that determination, pursuant to 19 CFR 351.224(e). See the SWT Amended Preliminary Calculation Memorandum dated January 15, 2002.

The Department does not agree that the errors which the petitioners alleged constitute ministerial errors within the meaning of 19 CFR 351.224(f). The first ''error'' alleged by the petitioners does not appear to be an error at all but, rather, simply a suggestion to change the programming language. The petitioners suggested language would have no effect on the margin. The second error is a comment about our methodology for calculating indirect selling expenses. Because the methodology we used (described accurately by the petitioners) was neither inadvertent nor unintentional, this is not a ministerial error. Therefore, we have not changed our preliminary calculations pursuant to either of the petitioners' allegations.

The collection of bonds or cash deposits and suspension of liquidation will be revised accordingly and parties will be notified of this determination, in accordance with section 733(d) and (f) of the Act.

Amended Preliminary Determination

As a result of our correction of the ministerial error, we have determined that the following dumping margins apply. In accordance with section 733(d)(2) of the Act, we are directing the Customs Service to suspend liquidation of all imports of subject merchandise from Germany, except for subject merchandise produced and exported by SWT (which has a *de minimis* weighted-average margin), that are entered, or withdrawn from warehouse, for consumption on or after the date of publication of this notice in the **Federal Register**. We will instruct the Customs Service to require a cash deposit or the posting of a bond equal to the weighted-average amounts as indicated in the chart below. These suspension-of-liquidation instructions will remain in effect until further notice.

Exporter/manufacturer	Weighted-average percentage margin
SWT	0.96
Salzgitter AG	35.75
All Others	18.36

Pursuant to section 733(d)(1)(A) and section 735(c)(5)(A) of the Act, the Department normally may not include zero and *de minimis* weighted-average dumping margins and margins determined entirely under section 776 of the Act in the calculation of the ''all-others'' deposit rate. However, such rates were the only margins available in this determination. Accordingly, the Department may, pursuant to section 735(c)(5)(B) of the Act, use ''any reasonable method'' to calculate the all-others rate. In this case, the Department calculated the all-others rate by using a simple average of the rates applicable to SWT and Salzgitter AG. See *Statement of Administrative Action* accompanying H.R. 5110, H.R. Doc. No. 316, Vol. 1, 103rd Congr. 2d Sess. at 873.

International Trade Commission Notification

In accordance with section 733(f) of the Act, we have notified the ITC of our amended preliminary determination. If our final determination is affirmative, the ITC will determine before the later of 120 days after the date of the preliminary determination or 45 days after our final determination whether the domestic industry in the United States is materially injured, or threatened with material injury, by reason of imports, or sales (or the likelihood of sales) for importation, of the subject merchandise.

Public Comment

Case briefs for this investigation must be submitted to the Department no later than seven days after the date of the final verification report issued in this proceeding. Rebuttal briefs must be filed five days from the deadline date for case briefs. A list of authorities used, a table of contents, and an executive summary of issues should accompany any briefs submitted to the Department. Executive summaries should be limited to five pages total, including footnotes. Section 774 of the Act provides that the Department will hold a public hearing to afford interested parties an opportunity to comment on arguments raised in case or rebuttal briefs, provided that such a hearing is requested by an interested party. If a request for a hearing is made in this investigation, the hearing will tentatively be held two days after the rebuttal-brief deadline date at the U.S. Department of Commerce, 14th Street and Constitution Avenue, NW., Washington, DC 20230. Parties should confirm by telephone the time, date, and place of the hearing 48 hours before the scheduled time.

We will make our final determination no later than May 13, 2001.

This determination is issued and published in accordance with sections 733(f) and 777(i)(1) of the Act and 19 CFR 351.205(c).

Dated: January 24, 2002.

Faryar Shirzad,

Assistant Secretary for Import Administration.

[FR Doc. 02–2413 Filed 1–30–02; 8:45 am]

BILLING CODE 3510–DS–P

DEPARTMENT OF COMMERCE

International Trade Administration

[A–821–814]

Notice of Amended Preliminary Determination of Sales at Less Than Fair Value: Structural Steel Beams From the Russian Federation

AGENCY: Import Administration, International Trade Administration, Department of Commerce.

ACTION: Notice of amended preliminary antidumping duty determination of sales at less than fair value: structural steel beams from the Russian Federation.

EFFECTIVE DATE: January 31, 2002.

FOR FURTHER INFORMATION CONTACT: Hermes Pinilla or Richard Rimlinger, Import Administration, International Trade Administration, U.S. Department of Commerce, 14th Street and Constitution Avenue, NW., Washington, DC 20230; telephone: (202) 482–3477 or (202) 482–4477, respectively.

The Applicable Statute and Regulations

Unless otherwise indicated, all citations to the statute are references to the provisions effective January 1, 1995, the effective date of the amendments made to the Tariff Act of 1930 (the Act) by the Uruguay Round Agreements Act (URTAA). In addition, unless otherwise indicated, all citations to the Department of Commerce's (the Department's) regulations are to the provisions codified at 19 CFR part 351 (April 2001).

Significant Ministerial Error

The Department is amending the preliminary determination of sales at less than fair value in the antidumping duty investigation of structural steel beams from the Russian Federation to reflect the correction of significant ministerial error made in the margin calculations regarding Nizhny Tagil Iron and Steel Works (Tagil), pursuant to 19 CFR 341.224(g)(1) and (g)(2). A ministerial error is defined as an error in addition, subtraction, or other arithmetic function, clerical error resulting from inaccurate copying, duplication, or the like, and any other similar type of unintentional error which the Secretary considers ministerial. See 19 CFR 351.224(f). A significant ministerial error is defined as an error, the correction of which, singly or in combination with other errors, would result in (1) a change of at least five absolute percentage points in, but not less than 25 percent of, the weighted-average dumping margin calculated in the original (erroneous) preliminary determinations or (2) a difference between a weighted-average dumping margin of zero or *de minimis* and a weighted average dumping margin of greater than *de minimis* or vice versa. See 19 CFR 351.224(g). As a result of this amended preliminary determination, we have revised the antidumping rate for Tagil.

Scope of Investigation

The scope of this investigation covers doubly-symmetric shapes, whether hot- or cold- rolled, drawn, extruded, formed or finished, having at least one dimension of at least 80 mm (3.2 inches or more), whether of carbon or alloy (other than stainless) steel, and whether or not drilled, punched, notched, painted, coated, or clad. These structural steel beams include, but are not limited to, wide-flange beams (''W'' shapes), bearing piles (''HP'' shapes), standard beams (''S'' or ''I'' shapes), and M-shapes. All the products that meet the physical and metallurgical descriptions provided above are within the scope of this investigation unless otherwise excluded. The following products are outside and/or specifically excluded from the scope of this investigation: (1) Structural steel beams greater than 400 pounds per linear foot, (2) structural steel beams that have a web or section height (also known as depth) over 40 inches, and (3) structural steel beams that have additional weldments, connectors or attachments to I-sections, H-sections, or pilings; however, if the only additional weldment, connector or attachment on the beam is a shipping brace attached to maintain stability during transportation, the beam is not removed from the scope definition by reason of such additional weldment, connector or attachment.

The merchandise subject to this investigation is classified in the Harmonized Tariff Schedule of the United States (''HTSUS'') at subheadings 7216.32.0000, 7216.33.0030, 7216.33.0060, 7216.33.0090, 7216.50.0000, 7216.61.0000, 7216.69.0000, 7216.91.0000, 7216,99.0000, 7228.70.3040, and 7228.70.6000. Although the HTSUS subheadings are provided for convenience and customs purposes, the written description of the merchandise under investigation is dispositive.

Period of Investigation

The period of investigation (POI) is October 1, 2000, through March 31, 2001.

Ministerial-Error Allegation

On December 19, 2001, the Department issued its affirmative preliminary determination in this proceeding. See *Notice of Preliminary Determination of Sales at Less Than Fair Value and Postponement of Final Determination: Structural Steel Beams from the Russian Federation,* 66 FR 67197 (December 28, 2001) (*Preliminary Determination.*

On January 7, 2002, the Department received a timely allegation of a ministerial error in the *Preliminary Determination* from Tagil. Tagil alleged that because it reported its recovered by-products, scrap, and wastes values as negative values, the Department actually added these values to Tagil's factors of production in the computer program when it attempted to credit them from Tagil's factors of production. Tagil argues that the Department should revise its computer program and add these values to its factors of production so it can properly credit the recovered by-products, scrap, and wastes values. See letter from Tagil alleging a ministerial error in the *Preliminary Determination* (January 7, 2002).

On January 9, 2002, the Department received a timely allegation of ministerial errors in the *Preliminary Determination* from the petitioners. The petitioners alleged two ministerial errors: (1) The Department used the wrong numerator or denominator in calculating the POI inflator for scrap value, and (2) the Department did not include the amount for depreciation in the computer program. According to the petitioners, the Department noted in its preliminary results, that it used a depreciation expense ratio of 11.86 percent in its calculations. The petitioners allege, however, that the Department did not include the depreciation expense ratio in the computer program when calculating normal value. See letter from the petitioners alleging ministerial errors in the *Preliminary Determination* (January 9, 2002).

On January 14, 2002, we received a timely submission from Tagil rebutting the petitioners assertion that the Department's miscalculation of scrap value is a ministerial error as defined in section 351.224(f) of the Department's regulations. Tagil contends that according to section 351.224(f) of the Department's regulations, a ministerial error is limited to an ''error in addition, subtraction, or other arithmetic function, clerical error resulting from inaccurate copying, duplication, or the like, and any other similar type of unintentional error which the Secretary considers ministerial.'' Tagil argues further that the petitioners have offered no basis for their proposed revised Polish inflation rate calculation and that the Department's regulations do not permit the submission of new factual information by parties to amend the preliminary results. Therefore, Tagil requests that the Department reject the petitioners' proposed inflation calculation revision.

We have reviewed our preliminary calculations and agree that the error which Tagil alleged is ministerial within the meaning of 19 CFR 351.224(f) because we unintentionally added Tagil's by-products, scrap, and wastes values to its factors of production when we intended to credit such values from Tagil's factors of production. We also agree that the errors which the petitioners alleged are ministerial errors within the meaning of 19 CFR 351.224(f) because we inadvertently did not include the amount for depreciation in our computer program calculation of normal value and we also inflated the scrap value using an incorrect average consumer price index figure for the POI. Furthermore, we determine these are ministerial errors which rise to the level of ''significant errors'' pursuant to 19 CFR 351.224(g)(1) and (g)(2), because together these ministerial errors result in a change of at least five absolute percentage points in, and not less than 25 percent of, the weighted-average dumping margin calculated in the original (erroneous) preliminary determination. Therefore, we are amending the *Preliminary Determination* to reflect the correction of these significant ministerial errors made in the margin calculations for

Tagil in that determination, pursuant to 19 CFR 351.224(e). See Tagil's Amended Preliminary Calculation Memorandum dated January 28, 2002.

Amended Preliminary Determination

As a result of our correction of the ministerial error, we have determined that the following dumping margin apply. In accordance with section 733(d)(2) of the Act, we are directing the Customs Service to suspend liquidation of all imports of subject merchandise from the Russian Federation, that are entered, or withdrawn from warehouse, for consumption on or after the date of publication of this notice in the **Federal Register**. We will instruct the Customs Service to require a cash deposit or the posting of a bond equal to the weighted-average amount as indicated in the chart below. This suspension-of-liquidation instructions will remain in effect until further notice.

Exporter/manufacturer	Weighted-average percentage margin
Tagil	108.37
Russia-wide rate	108.37

Because Tagil is the sole respondent in this investigation and the sole Russian producer or exporter with sales or shipments of subject merchandise to the United States during the POI, the recalculated margin for Tagil also applies to the Russia-wide rate. As a result of our amendment, the Russia-wide rate has also been amended, and applies to all entries of the subject merchandise except for entries from Tagil.

International Trade Commission Notification

In accordance with section 733(f) of the Act, we have notified the ITC of our amended preliminary determination. If our final determination is affirmative, the ITC will determine before the later of 120 days after the date of the preliminary determination or 45 days after our final determination whether the domestic industry in the United States is materially injured, or threatened with material injury, by reason of imports, or sales (or the likelihood of sales) for importation, of the subject merchandise.

Public Comment

Case briefs for this investigation must be submitted to the Department no later than seven days after the date of the final verification report issued in this proceeding. Rebuttal briefs must be filed five days from the deadline date for case briefs. A list of authorities used, a table of contents, and an executive summary of issues should accompany any briefs submitted to the Department. Executive summaries should be limited to five pages total, including footnotes. Section 774 of the Act provides that the Department will hold a public hearing to afford interested parties an opportunity to comment on arguments raised in case or rebuttal briefs, provided that such a hearing is requested by an interested party. If a request for a hearing is made in this investigation, the hearing will tentatively be held two days after the rebuttal-brief deadline date at the U.S. Department of Commerce, 14th Street and Constitution Avenue, NW., Washington, DC 20230. Parties should confirm by telephone the time, date, and place of the hearing 48 hours before the scheduled time.

Interested parties who wish to request a hearing, or to participate if one is requested, must submit a written request to the Assistant Secretary for Import Administration, U.S. Department of Commerce, Room 1870, within 30 days of the publication of this notice. Requests should contain: (1) The party's name, address, and telephone number; (2) the number of participants; and (3) a list of the issues to be discussed. Oral presentations will be limited to issues raised in the briefs.

We will make our final determination no later than May 13, 2001.

This determination is issued and published in accordance with sections 733(f) and 777(i)(1) of the Act and 19 CFR 351.224(e).

Dated: January 24, 2002.

Faryar Shirzad,

Assistant Secretary for Import Administration.

[FR Doc. 02–2414 Filed 1–30–02; 8:45 am]

BILLING CODE 3510–DS–M

DEPARTMENT OF COMMERCE

National Oceanic and Atmospheric Administration

[I.D. 011402G]

North Pacific Fishery Management Council; Public Meeting

AGENCY: National Marine Fisheries Service (NMFS), National Oceanic and Atmospheric Administration (NOAA), Commerce.

ACTION: Notice of a committee meeting.

SUMMARY: The North Pacific Fishery Management Council's (Council) Halibut Subsistence Committee will meet in Anchorage, AK.

DATES: The meeting will be held on February 26, 2002.

ADDRESSES: The meeting will be held at the RurAL CAP Building, 731 Gambell Street, Anchorage, AK.

Council address: North Pacific Fishery Management Council, 605 W. 4th Ave., Suite 306, Anchorage, AK 99501–2252.

FOR FURTHER INFORMATION CONTACT: Jane DiCosimo, NPFMC, 907–271–2809.

SUPPLEMENTARY INFORMATION: The meeting will begin at 10 a.m. in the Board Room of the RurAL CAP Building, and conclude by 4:30 p.m. The committee has been tasked by the Council to provide recommendations on a proposed regulatory change to the halibut subsistence fishery regulations in Alaska that would allow proxy fishing in the halibut subsistence fishery in certain subsistence fishing areas.

Although non-emergency issues not contained in this agenda may come before this group for discussion, those issues may not be the subject of formal action during this meeting. Action will be restricted to those issues specifically identified in this notice and any issues arising after publication of this notice that require emergency action under section 305(c) of the Magnuson-Stevens Fishery Conservation and Management Act, provided the public has been notified of the Council's intent to take final action to address the emergency.

Special Accommodations

This meeting is physically accessible to people with disabilities. Requests for sign language interpretation or other auxiliary aids should be directed to Helen Allen, 907–271–2809, at least 5 working days prior to the meeting date.

Dated: January 28, 2002.

Richard W. Surdi,

Acting Director, Office of Sustainable Fisheries, National Marine Fisheries Service.

[FR Doc. 02–2406 Filed 1–30–02; 8:45 am]

BILLING CODE 3510–22–S

DEPARTMENT OF ENERGY

Federal Energy Regulatory Commission

[Docket No. EL02–55–000]

Notice of Filing

January 25, 2002.

Cogen Lyondell, Inc.
Oyster Creek Limited
Dynegy Power Corp
Baytown Energy Center, L.P.
Channel Energy Center, L.P.
Clear Lake Cogeneration, L.P.
Corpus Christi Cogeneration, L.P.

Pasadena Cogeneration, L.P.
Texas City Cogeneration, L.P.
Calpine Corporation, and Gregory Power Partners, L.P.

Take notice that on January 23, 2002, Cogen Lyondell, Inc. Oyster Creek Limited, Dynegy Power Corp., Baytown Energy Center, L.P. Channel Energy Center, L.P., Clear Lake Cogeneration, L.P., Corpus Christi Cogeneration, L.P., Pasadena Cogeneration, L.P., Texas City Cogeneration, L.P., Calpine Corporation, and Gregory Power Partners, L.P. (Texas QF's or Petitioners) tendered for filing with the Federal Energy Regulatory Commission (Commission) a petition for enforcement of PURPA against the Public Utility Commission of Texas (PUCT), American Electric Power/Central and Southwest Corporation, Texas Utilities, and Reliant, Inc.

Any person desiring to intervene or to protest this filing should file with the Federal Energy Regulatory Commission, 888 First Street, NE., Washington, DC 20426, in accordance with Rules 211 and 214 of the Commission's Rules of Practice and Procedure (18 CFR 385.211 and 385.214). Protests will be considered by the Commission in determining the appropriate action to be taken, but will not serve to make protestants parties to the proceeding. Any person wishing to become a party must file a motion to intervene. All such motions or protests should be filed on or before the comment date, and, to the extent applicable, must be served on the applicant and on any other person designated on the official service list. This filing is available for review at the Commission or may be viewed on the Commission's Web site at *http://www.ferc.gov* using the ''RIMS'' link, select ''Docket #'' and follow the instructions (call 202–208–2222 for assistance). Protests and interventions may be filed electronically via the Internet in lieu of paper; *see* 18 CFR 385.2001(a)(1)(iii) and the instructions on the Commission's Web site under the ''e-Filing'' link.

Comment Date: February 4, 2002.

C.B. Spencer,

Acting Secretary.

[FR Doc. 02–2368 Filed 1–30–02; 8:45 am]

BILLING CODE 6717–01–M

DEPARTMENT OF ENERGY

Federal Energy Regulatory Commission

[Docket No. ER02–510–000]

TPS Dell, LLC; Notice of Issuance of Order

January 25, 2002.

TPS Dell, LLC (TPS Dell) submitted for filing a tariff that provides for the sales of capacity, energy, and ancillary services at market-based rates and for the reassignment of transmission capacity. TPS Dell also requested waiver of various Commission regulations. In particular, TPS Dell requested that the Commission grant blanket approval under 18 CFR part 34 of all future issuances of securities and assumptions of liability by TPS Dell.

On January 22, 2002, pursuant to delegated authority, the Director, Office of Markets, Tariffs and Rates-Central, granted requests for blanket approval under Part 34, subject to the following:

Any person desiring to be heard or to protest the blanket approval of issuances of securities or assumptions of liability by TPS Dell should file a motion to intervene or protest with the Federal Energy Regulatory Commission, 888 First Street, NE., Washington, DC 20426, in accordance with rules 211 and 214 of the Commission's rules of practice and procedure (18 CFR 385.211 and 385.214).

Absent a request to be heard in opposition within this period, TPS Dell is authorized to issue securities and assume obligations or liabilities as a guarantor, indorser, surety, or otherwise in respect of any security of another person; provided that such issuance or assumption is for some lawful object within the corporate purposes of TPS Dell, compatible with the public interest, and is reasonably necessary or appropriate for such purposes.

The Commission reserves the right to require a further showing that neither public nor private interests will be adversely affected by continued approval of TPS Dell's issuances of securities or assumptions of liability.

Notice is hereby given that the deadline for filing motions to intervene or protests, as set forth above, is February 21, 2002.

Copies of the full text of the Order are available from the Commission's Public Reference Branch, 888 First Street, NE., Washington, DC 20426. The Order may also be viewed on the Internet at *http://www.ferc.fed.us/online/rims.htm* (call 202–208–2222 for assistance). Comments, protests, and interventions may be filed electronically via the internet in lieu of paper. See, 18 CFR 385.2001(a)(1)(iii) and the instructions on the Commission's web site at *http://www.ferc.fed.us/efi/doorbell.htm.*

C.B. Spencer,

Acting Secretary.

[FR Doc. 02–2290 Filed 1–30–02; 8:45 am]

BILLING CODE 6717–01–P

DEPARTMENT OF ENERGY

Federal Energy Regulatory Commission

[Docket No. ER02–501–000]

Great Northern Paper, Inc.; Notice of Issuance of Order

January 25, 2002.

Great Northern Paper, Inc. (Great Northern) submitted for filing a rate schedule that provides for the sale of capacity, energy, and/or ancillary services at market-based rates and for the reassignment of transmission capacity. Great Northern also requested waiver of various Commission regulations. In particular, Great Northern requested that the Commission grant blanket approval under 18 CFR Part 34 of all future issuances of securities and assumptions of liability by Great Northern.

On January 22, 2002, pursuant to delegated authority, the Director, Office of Markets, Tariffs and Rates-Central, granted requests for blanket approval under Part 34, subject to the following:

Any person desiring to be heard or to protest the blanket approval of issuances of securities or assumptions of liability by Great Northern should file a motion to intervene or protest with the Federal Energy Regulatory Commission, 888 First Street, N.E., Washington, D.C. 20426, in accordance with Rules 211 and 214 of the Commission's Rules of Practice and Procedure (18 CFR 385.211 and 385.214).

Absent a request to be heard in opposition within this period, Great Northern is authorized to issue securities and assume obligations or liabilities as a guarantor, indorser, surety, or otherwise in respect of any security of another person; provided that such issuance or assumption is for some lawful object within the corporate purposes of Great Northern, compatible with the public interest, and is reasonably necessary or appropriate for such purposes.

The Commission reserves the right to require a further showing that neither public nor private interests will be adversely affected by continued

approval of Great Northern's issuances of securities or assumptions of liability.

Notice is hereby given that the deadline for filing motions to intervene or protests, as set forth above, is February 21, 2002.

Copies of the full text of the Order are available from the Commission's Public Reference Branch, 888 First Street, N.E., Washington, D.C. 20426. The Order may also be viewed on the Internet at *http://www.ferc.fed.us/online/rims.htm* (call 202–208–2222 for assistance). Comments, protests, and interventions may be filed electronically via the internet in lieu of paper. See, 18 CFR 385.2001(a)(1)(iii) and the instructions on the Commission's web site at *http://www.ferc.fed.us/efi/doorbell.htm.*

C.B. Spencer,

Acting Secretary.

[FR Doc. 02–2289 Filed 1–30–02; 8:45 am]

BILLING CODE 6717–01–P

DEPARTMENT OF ENERGY

Federal Energy Regulatory Commission

[Project No. 184–065 California]

El Dorado Irrigation District; Notice of Public Meetings

January 25, 2002.

The Federal Energy Regulatory Commission (Commission) is reviewing the application for a new license for the El Dorado Project (FERC No. 184), which was filed on February 22, 2000. The El Dorado Project, licensed to the El Dorado Irrigation District (EID), is located on the South Fork American River, in El Dorado, Alpine, and Amador Counties, California. The project occupies lands of the Eldorado National Forest.

The EID, several state and federal agencies, and several non-governmental agencies have asked the Commission for time to work collaboratively with a facilitator to resolve certain issues relevant to this proceeding. These meetings are a part of that collaborative process. On Monday, February 11, there will be a meeting of the aquatics-hydrology workgroup. On Tuesday, February 12, the recreation-socioeconomics-visual resources workgroup will meet. The meetings will focus on further defining interests and the development of strategies to meet objectives. We invite the participation of all interested governmental agencies, non-governmental organizations, and the general public in this meeting.

Both meetings will be held from 9 am until 4 pm in the Sacramento Marriott, located at 11211 Point East Drive, Rancho Cordova, California.

For further information, please contact Elizabeth Molloy at (202) 208–0771 or John Mudre at (202) 219–1208.

C.B. Spencer,

Acting Secretary.

[FR Doc. 02–2291 Filed 1–30–02; 8:45 am]

BILLING CODE 6717–01–P

DEPARTMENT OF ENERGY

Federal Energy Regulatory Commission

[Docket No. EL01–122–001, et al.]

PJM Interconnection, L.L.C., et al.; Electric Rate and Corporate Regulation Filings

January 25, 2002.

Take notice that the following filings have been made with the Commission. Any comments should be submitted in accordance with Standard Paragraph E at the end of this notice.

1. PJM Interconnection, L.L.C.

[Docket No. EL01–122–001]

Take notice that on January 22, 2002, PJM Interconnection, L.L.C. (PJM) tendered for filing, pursuant to the Commission's December 20, 2001 ''Order Requiring the Filing of New Oversight Measures and Terminating Investigation'' and section 206 of the Federal Power Act, revisions to the PJM Open Access Transmission Tariff, the Amended and Restated Operating Agreement of PJM Interconnection, L.L.C., and the PJM Transmission Owners Agreement to implement the transmission oversight procedures and practices described by PJM in its November 2, 2001 transmission oversight report in Docket No. EL01–122–000.

Copies of this filing have been served on all PJM Members and the state electric regulatory commissions in the PJM control area.

Comment Date: February 12, 2002.

2. International Transmission Company

[Docket Nos. ER01–3000–003, RT01–101–003 and, EC01–146–003]

Take notice that on January 22, 2002, International Transmission Company (International Transmission) and DTE Energy Company tendered a filing in compliance with an order of the Federal Energy Regulatory Commission (Commission) issued on December 20, 2001, in the above-referenced dockets. The December 20 Order directs Applicants to submit a final updated list of all jurisdictional facilities, together with information about their customers, and any contracts, tariffs, and service agreements.

Comment Date: February 12, 2002.

3. Duke Energy Washington, LLC

[Docket No. ER02–795–000]

Take notice that on January 18, 2002, Duke Energy Washington, LLC (Duke Washington) tendered for filing pursuant to section 205 of the Federal Power Act its proposed FERC Electric Tariff No. 1.

Duke Washington seeks authority to sell energy and capacity, as well as ancillary services, at market-based rates, together with certain waivers and preapprovals. Duke Washington also seeks authority to sell, assign, or transfer transmission rights that it may acquire in the course of its marketing activities. Duke Washington seeks an effective date 60 days from the date of filing for its proposed rate schedules.

Comment Date: February 8, 2002.

4. California Independent System Operator Corporation

[Docket No. ER02–798–000]

Take notice that the California Independent System Operator Corporation, (ISO) on January 18, 2002, tendered for filing a Participating Generator Agreement between the ISO and Gilroy Energy Center, LLC for acceptance by the Commission.

The ISO states that this filing has been served on Gilroy Energy Center, LLC and the California Public Utilities Commission. The ISO is requesting waiver of the 60-day notice requirement to allow the Participating Generator Agreement to be made effective September 7, 2001.

Comment Date: February 8, 2002.

5. Occidental Energy Marketing, Inc.

[Docket No. ER02–799–000]

Take notice that on January 18, 2002, Occidental Energy Marketing, Inc. (OEMI) petitioned the Federal Energy Regulatory Commission (Commission) for acceptance of Occidental Energy Marketing, Inc. FERC Electric Rate Schedule No. 1; the issuance of certain blanket authorizations, and an authorization to sell electric capacity and energy at market-based rates; and the waiver of certain Commission regulations.

OEMI intends to engage in wholesale electric capacity and energy purchases and sales as an electric power marketer. OEMI is not in the business of electric power generation or transmission. OEMI is affiliated, however, with four ''qualifying facilities'' under PURPA and proposes to market some affiliate-

generated electric power. OEMI is a wholly owned subsidiary of Occidental Petroleum Corporation, which, through affiliates, explores for, develops, produces and markets crude oil and natural gas and manufactures and markets a variety of basic chemicals as well as specialty chemicals.

Comment Date: February 8, 2002.

6. Michigan Electric Transmission Company and Consumers Energy Company

[Docket No. ER02–800–000]

Take notice that on January 18, 2002, Consumers Energy Company (Consumers) and Michigan Electric Transmission Company (Michigan Transco) tendered for filing a Second Supplemental Notice of Succession and a Revised Rate Schedule for Consumers related to the transfer of transmission assets from Consumers to Michigan Transco. The Second Supplemental Notice of Succession, and Revised Rate Schedule are to become effective April 1, 2001.

A full copy of the filing was served upon the Michigan Public Service Commission, and Customers Michigan South Central Power Authority, Michigan Public Power Authority and Wolverine Power Supply Cooperative were sent the Notice of Succession and related materials.

Comment Date: February 8, 2002.

7. Maclaren Energy Inc.

[Docket No. ER02–801–000]

Take notice that on January 18, 2002, Maclaren Energy Inc. (Maclaren) submitted for filing with the Federal Energy Regulatory Commission (Commission) a letter approving its membership with the Western Systems Power Pool (WSPP). Maclaren requests that the Commission allow its membership in the WSPP to become effective on January 21, 2002.

Maclaren states that a copy of this filing has been provided to the WSPP Executive Committee, the General Counsel, and the members of the WSPP.

Comment Date: February 8, 2002.

8. Commonwealth Edison Company

[Docket No. ER02–802–000]

Take notice that on January 18, 2002, Commonwealth Edison Company (ComEd) submitted for filing an executed Dynamic Scheduling Agreement (DSA) with Alliant Energy (Alliant) under the terms of ComEd's Open Access Transmission Tariff (OATT). The DSA provides the necessary arrangements for Dynamic Scheduling under a Service Agreement for firm point-to-point transmission service from ComEd to Alliant for the period January 1, 2002 to April 1, 2003.

ComEd requests an effective date of January 1, 2002, and accordingly seeks waiver of the Commission's notice requirements. A copy of this filing was served on Alliant.

Comment Date: February 8, 2002.

9. Southwest Power Pool, Inc.

[Docket No. ER02–803–000]

Take notice that on January 18, 2002 Southwest Power Pool, Inc. (SPP) submitted for filing four executed service agreements for Firm Point-to-point Transmission Service with Southwestern Public Service Company d.b.a. Xcel Energy (Transmission Customer), as Service Agreements No. 598 through 601.

SPP seeks an effective date of March 1, 2002 for Service Agreement 598, and an effective date of January 1, 2002 for Service Agreement Nos. 599 through 601. A copy of this filing was served on the Transmission Customer.

Comment Date: February 8, 2002.

10. Wisconsin Power and Light Company

[Docket No. ER02–804–000]

Take notice that on January 18, 2002, Wisconsin Power and Light Company (WPL), tendered for filing a Service Agreement with WPPI and request to terminate Service Agreement No. 39 under FERC Electric Tariff, Original Volume No. 5. WPL indicates that copies of the filing have been provided to WPPI, Prairie du Sac and the Public Service Commission of Wisconsin.

Comment Date: February 8, 2002.

11. Wisconsin Electric Power Company

[Docket No. ER02–805–000]

Take notice that on January 18, 2002, Wisconsin Electric Power Company (Wisconsin Electric) tendered for filing a fully executed Master Power Purchase and Sale Agreement (Master Agreement), designated as FERC Electric Rate Schedule No. 109, between Wisconsin Electric and Ameren Energy Marketing Company. The Master Agreement sets forth the general terms and conditions pursuant to which Wisconsin Electric and Ameren Energy Marketing Company will enter into transactions for the purchase and sale of electric capacity, energy, or other product related thereto. Wisconsin Electric requests that this Master Agreement become effective immediately.

Comment Date: February 8, 2002.

12. Wisconsin Electric Power Company

[Docket No. ER02–806–000]

Take notice that on January 18, 2002, Wisconsin Electric Power Company (Wisconsin Electric) tendered for filing a fully executed Master Power Purchase and Sale Agreement (Master Agreement), designated as FERC Electric Rate Schedule No. 108, between Wisconsin Electric and Ameren Energy Inc., as agent for and on behalf of Union Electric Company d/b/a Amerenue, and Ameren Energy Generating Company (Ameren). The Master Agreement sets forth the general terms and conditions pursuant to which Wisconsin Electric and Ameren will enter into transactions for the purchase and sale of electric capacity, energy, or other product related thereto. Wisconsin Electric requests that this Master Agreement become effective immediately.

Comment Date: February 8, 2002.

13. California Independent System Operator Corporation

[Docket No. ER02–807–000]

Take notice that on January 18, 2002, the California Independent System Operator Corporation, (ISO) tendered for filing with the Federal Energy Regulatory Commission (Commission) a Meter Service Agreement for ISO Metered Entities between the ISO and Gilroy Energy Center, LLC for acceptance by the Commission.

The ISO states that this filing has been served on Gilroy Energy Center, LLC and the California Public Utilities Commission. The ISO is requesting waiver of the 60-day notice requirement to allow the Meter Service Agreement for ISO Metered Entities to be made effective September 7, 2001.

Comment Date: February 8, 2002.

14. Northern States Power Company, (Minnesota) and Northern States Power Company (Wisconsin)

[Docket No. ER02–808–000]

Take notice that on January 22, 2002, Northern States Power Company and Northern States Power Company (Wisconsin) jointly tendered for filing revised tariffs sheets to NSP Electric Rate Schedule FERC No. 2, contained in Xcel Energy Operating Companies FERC Electric Tariff, Original Volume Number 3. The revised tariff sheets provide the annual update to Exhibits VII, VIII, and IX of the ''Restated Agreement to Coordinate Planning and Operations and Interchange Power and Energy between Northern States Power Company (Minnesota) and Northern States Power Company (Wisconsin),'' accepted for filing in Docket No. ER01–1014–000.

The NSP Companies request an effective date of January 1, 2002, without suspension. The NSP Companies state that a copy of the filing has been served upon the State Commissions of Michigan, Minnesota, North Dakota, South Dakota and Wisconsin.

Comment Date: February 12, 2002.

15. Pacific Gas and Electric Company

[Docket No. ER02–810–000]

Take notice that on January 22, 2002, Pacific Gas and Electric Company (PG&E) tendered for filing an amendment letter agreement (Amendment) to the Generator Special Facilities and Interconnection Agreements between Geysers Power Company, LLC and PG&E (collectively, Parties). The Amendment extends the term of the Agreements. The filing does not modify any rate levels.

The Agreements were originally accepted for filing by the Commission in FERC Docket No. ER00–3294–001 and designated as Service Agreement No. 1 under FERC PG&E Electric Tariff, Sixth Revised Volume No. 5.

Copies of this filing were served upon Geysers Power Company, LLC, the California Independent System Operator Corporation, and the California Public Utilities Commission.

Comment Date: February 12, 2002.

16. Renewable Energy Resources, LLC

[Docket No. ER02–809–000]

Take notice that on January 22, 2002, Renewable Energy Resources, LLC, a Michigan limited liability company, (Applicant) petitioned the Federal Energy Regulatory Commission (Commission) for acceptance of Renewable Energy Resources, LLC's FERC Electric Rate Schedule No. 1; the granting of certain blanket authorizations, including the authority to sell electric energy and capacity to wholesalers at market-based rates; and the waiver of certain Commission regulations.

Applicant intents to engage in wholesale electric power and energy purchases and sales as a marketer. Applicant is not in the business of generating or transmitting electric power. Applicant neither owns or controls any transmission or operating generational facilities, or has a franchised service area for the sale of electricity to captive customers. Applicant is a privately owned company, and is not engaged in any other businesses.

Applicant does not currently sell power to any person pursuant to the proposed Rate Schedule. A copy of its filing, however, has been served on the Michigan Public Service Commission as a courtesy.

Comment Date: February 12, 2002.

17. Kansas Gas and Electric Company

[Docket No. ER02–811–000]

Take notice that on January 22, 2002, Western Resources, Inc. (d.b.a. Westar Energy), on behalf of its wholly-owned subsidiary Kansas Gas and Electric Company (KGE) (d.b.a. Westar Energy), submitted for filing an Order 614 compliant version of KGE's Unit Participation Power Agreement with Midwest Energy, Inc. (MWE), FERC No. 184, dated November 17, 1993. The purpose of this filing is to amend the previously signed Agreement between the parties to allow certain transactions to be priced at rates below those established by the Agreement as mutually agreed by the parties. This agreement is proposed to be effective January 1, 2002.

Copies of the filing were served upon MWE and the Kansas Corporation Commission.

Comment Date: February 12, 2002.

18. New England Power Company

[Docket No. ER02–812–000]

Take notice that on January 22, 2002, New England Power Company (NEP) submitted Original Service Agreement No. 210 for Firm Local Generation Delivery Service between NEP and Wheelabrator North Andover Inc. under NEP's open access transmission tariff—FERC Electric Tariff, Second Revised Volume No. 9.

Comment Date: February 12, 2002.

19. Wolverine Power Supply Cooperative, Inc.

[Docket No. ER02–813–000]

Take notice that on January 22, 2002, Wolverine Power Supply Cooperative, Inc., submitted for filing proposed changes to its First Revised Rate Schedule FERC No. 4—Wholesale Service to Member Distribution Cooperatives. The proposed change consists of a First Revised Page No. 14.00, Rider ''SB'', to replace the Original Page No. 14.00, Rider ''SB.'' Wolverine requests an effective date of February 1, 2002, for this First Revised Page No. 14.00.

Wolverine states that a copy of this filing has been served upon its member cooperatives: Cherryland Electric Cooperative, Great Lakes Energy, Presque Isle Electric & Gas Co-op, HomeWorks Tri-County Electric Cooperative, Wolverine Power Marketing Cooperative, and the Michigan Public Service Commission.

Comment Date: February 12, 2002.

20. Southwest Power Pool, Inc.

[Docket No. ER02–796–000]

Take notice that on January 22, 2002, Southwest Power Pool, Inc. (SPP) submitted for filing an executed service agreement for Firm Point-to-Point transmission Service with UtiliCorp United, Inc. (Transmission Customer).

SPP seeks an effective date of January 1, 2002 for this service agreement. A copy of this filing was served on the Transmission Customer.

Comment Date: February 12, 2002.

21. Astoria Energy LLC

[Docket No. ER01–3103–001]

Take notice that on January 22, 2002, Astoria Energy LLC (Astoria Energy) filed with the Federal Energy Regulatory Commission (Commission) an Amendment (Amendment) to its Petition for Acceptance of Initial Rate Schedule, Waivers & Blanket Authority, Docket No. ER01–3103–000. Astoria Energy's Amendment is filed pursuant to section 205 of the Federal Power Act and Rules 205 and 207 of the Commission's rules of Practice.

Comment Date: February 12, 2002.

Standard Paragraph

E. Any person desiring to be heard or to protest such filing should file a motion to intervene or protest with the Federal Energy Regulatory Commission, 888 First Street, NE, Washington, DC 20426, in accordance with Rules 211 and 214 of the Commission's Rules of Practice and Procedure (18 CFR 385.211 and 385.214). All such motions or protests should be filed on or before the comment date. Protests will be considered by the Commission in determining the appropriate action to be taken, but will not serve to make protestants parties to the proceeding. Any person wishing to become a party must file a motion to intervene. Copies of this filing are on file with the Commission and are available for public inspection. This filing may also be viewed on the Web at *http://www.ferc.gov* using the ''RIMS'' link, select ''Docket#'' and follow the instructions (call 202–208–2222 for assistance). Comments, protests and interventions may be filed electronically via the Internet in lieu of paper. *See*, 18 CFR 385.2001(a)(1)(iii) and the instructions on the Commission's Web site under the ''e-Filing'' link.

C.B. Spencer,

Acting Secretary.

[FR Doc. 02–2367 Filed 1–30–02; 8:45 am]

BILLING CODE 6717–01–P

DEPARTMENT OF ENERGY

Federal Energy Regulatory Commission

[Docket No. CP02–45–000]

Texas Eastern Transmission. L.P.; Notice of Intent To Prepare an Environmental Assessment for the Proposed Hanging Rock Lateral Project and Request for Comments on Environmental Issues

January 25, 2002.

The staff of the Federal Energy Regulatory Commission (FERC or Commission) will prepare an environmental assessment (EA) that will discuss the environmental impacts of the Hanging Rock Lateral Project involving construction and operation of facilities by Texas Eastern Transmission, L.P. (Texas Eastern) in (Scioto and Lawrence Counties, Ohio).[1] These facilities would consist of about 9.6 miles of 24-inch-diameter pipeline. This EA will be used by the Commission in its decision-making process to determine whether the project is in the public convenience and necessity.

If you are a landowner receiving this notice, you may be contacted by a pipeline company representative about the acquisition of an easement to construct, operate, and maintain the proposed facilities. The pipeline company would seek to negotiate a mutually acceptable agreement. However, if the project is approved by the Commission, that approval conveys with it the right of eminent domain. Therefore, if easement negotiations fail to produce an agreement, the pipeline company could initiate condemnation proceedings in accordance with state law.

A fact sheet prepared by the FERC entitled ''An Interstate Natural Gas Facility On My Land? What Do I Need To Know?'' was attached to the project notice Texas Eastern provided to landowners. This fact sheet addresses a number of typically asked questions, including the use of eminent domain and how to participate in the Commission's proceedings. It is available for viewing on the FERC Internet website (*www.ferc.gov*).

Summary of the Proposed Project

Texas Eastern wants to construct a pipeline lateral to provide service to the Hanging Rock Power Plant, a 1,240 megawatt gas-fired electric power plant (Hanging Rock Plant) which will be constructed in Lawrence County, Ohio, by Duke Energy Hanging Rock, L.L.C. The pipeline facilities would allow Texas Eastern to provide a total of 250,000 dekatherms per day (dth/d) of transportation service to the Hanging Rock Plant. Texas Eastern proposes to have these facilities in service by November 1, 2002. Texas Eastern seeks authority to construct and operate:

- 9.6 miles of 24-inch-diameter pipeline extending from milepost (MP) 562.18 on Texas Eastern's 30-inch-diameter Line Nos. 10 and 15 (the Texas Eastern Interconnect) in Scioto County, Ohio, to the Hanging Rock Plant in Lawrence County, Ohio;
- 150 feet of 20-inch-diameter pipeline at the Texas Eastern Interconnect;
- 150 feet of 12-inch-diameter pipeline at MP 2.1 on the Hanging Rock Lateral to interconnect with the existing Tennessee Gas Pipeline Company (Tennessee) pipeline Scioto County, Ohio;
- 2 new metering and regulating (M&R) stations (the Tennessee Interconnect) at MP 2.1 in Scioto County, Ohio, where the Hanging Rock Lateral and the Tennessee pipeline cross;
- the Hanging Rock Plant M&R station on the Hanging Rock Plant property at MP 9.6 in Lawrence County, Ohio; and
- appurtenant facilities.

The location of the project facilities is shown in appendix 2.[2]

Land Requirements for Construction

Construction of the proposed facilities would require about 146.9 acres of land including the construction right-of-way, extra work spaces, access roads, and pipeyards. Following construction, about 0.86 acre would be maintained as new aboveground facility sites. The remaining 146.04 acres of land would be restored and allowed to revert to its former use. About 57.8 acres of this total would be within the permanent pipeline right-of-way.

The EA Process

The National Environmental Policy Act (NEPA) requires the Commission to take into account the environmental impacts that could result from an action whenever it considers the issuance of a Certificate of Public Convenience and Necessity. NEPA also requires us[3] to discover and address concerns the public may have about proposals. We call this ''scoping''. The main goal of the scoping process is to focus the analysis in the EA on the important environmental issues. By this Notice of Intent, the Commission requests public comments on the scope of the issues it will address in the EA. All comments received are considered during the preparation of the EA. State and local government representatives are encouraged to notify their constituents of this proposed action and encourage them to comment on their areas of concern.

The EA will discuss impacts that could occur as a result of the construction and operation of the proposed project under these general headings:

- geology and soils
- water resources, fisheries, and wetlands
- vegetation and wildlife
- endangered and threatened species
- public safety
- land use
- cultural resources
- air quality and noise
- hazardous waste

We will also evaluate possible alternatives to the proposed project or portions of the project, and make recommendations on how to lessen or avoid impacts on the various resource areas. Alternatives routes that may be evaluated include moving segments of the project to the east side of the Norfolk & Western Railroad tracks.

Our independent analysis of the issues will be in the EA. Depending on the comments received during the scoping process, the EA may be published and mailed to Federal, state, and local agencies, public interest groups, interested individuals, affected landowners, newspapers, libraries, and the Commission's official service list for this proceeding. A comment period will be allotted for review if the EA is published. We will consider all comments on the EA before we make our recommendations to the Commission.

- To ensure your comments are considered, please carefully follow the instructions in the public participation section beginning on page 5.

[1] Texas Eastern's application was filed with the Commission under Section 7 of the Natural Gas Act and Part 157 of the Commission's regulations.

[2] The appendices referenced in this notice are not being printed in the **Federal Register**. Copies are available on the Commission's website at the ''RIMS'' link or from the Commission's Public Reference and Files Maintenance Branch, 888 First Street, N.E., Washington, D.C. 20426, or call (202) 208–1371. For instructions on connecting to RIMS refer to the last page of this notice. Copies of the appendices were sent to all those receiving this notice in the mail.

[3] ''We'', ''us'', and ''our'' refer to the environmental staff of the Office of Energy Projects (OEP).

Currently Identified Environmental Issues

We have already identified several issues that we think deserve attention based on a preliminary review of the proposed facilities and the environmental information provided by Texas Eastern. This preliminary list of issues may be changed based on your comments and our analysis.

- Six perennial and 8 intermittent waterbodies would be crossed by open cut.
- About 4.53 acres of wetlands, including about 2.47 acres of forested wetlands, would be crossed.
- About 7.23 acres of upland forest would be cleared.
- Three federally listed endangered or threatened species may occur in the proposed project area.
- About 117.7 acres of prime agricultural land would be affected, including a total of about 0.86 acre of prime farmland soils that would convert to industrial use.
- About 3.9 acres of residential property would be affected.
- A total of 16 residences are within 50 feet of the construction work area and 8 of these are within 10 feet.
- A total of 2 businesses are within 40 feet of the construction right-of-way and 1 business is within 10 feet.

Also, we have made a preliminary decision to not address the impacts of the nonjurisdictional facilities. We will briefly describe their location and status in the EA.

Public Participation

You can make a difference by providing us with your specific comments or concerns about the project. By becoming a commentor, your concerns will be addressed in the EA and considered by the Commission. You should focus on the potential environmental effects of the proposal, alternatives to the proposal (including alternative locations/routes), and measures to avoid or lessen environmental impact. The more specific your comments, the more useful they will be. Please carefully follow these instructions to ensure that your comments are received in time and properly recorded:

- Send an original and two copies of your letter to: Linwood A. Watson, Jr., Acting Secretary, Federal Energy Regulatory Commission, 888 First St., N.E., Room 1A, Washington, DC 20426
- Label one copy of the comments for the attention of Gas 2.
- Reference Docket No. CP02–045–000.
- Mail your comments so that they will be received in Washington, DC on or before (February 25, 2002).

Comments may also be filed electronically via the Internet in lieu of paper. See 18 CFR 385.2001(a)(1)(iii) and the instructions on the Commission's web site at *http://www.ferc.gov* under the ''e-Filing'' link and the link to the User's Guide. Before you can file comments you will need to create an account which can be created by clicking on ''Login to File'' and then ''New User Account.''

We may mail the EA for comment. If you are interested in receiving it, please return the Information Request (appendix 3). If you do not return the Information Request, you will be taken off the mailing list.

Becoming an Intervenor

In addition to involvement in the EA scoping process, you may want to become an official party to the proceeding known as an ''intervenor''. Intervenors play a more formal role in the process. Among other things, intervenors have the right to receive copies of case-related Commission documents and filings by other intervenors. Likewise, each intervenor must provide 14 copies of its filings to the Secretary of the Commission and must send a copy of its filings to all other parties on the Commission's service list for this proceeding. If you want to become an intervenor you must file a motion to intervene according to Rule 214 of the Commission's Rules of Practice and Procedure (18 CFR 385.214) (see appendix 2).[4] Only intervenors have the right to seek rehearing of the Commission's decision.

Affected landowners and parties with environmental concerns may be granted intervenor status upon showing good cause by stating that they have a clear and direct interest in this proceeding which would not be adequately represented by any other parties. You do not need intervenor status to have your environmental comments considered.

Additional information about the proposed project is available from the Commission's Office of External Affairs at (202) 208–1088 or on the FERC website (www.ferc.gov) using the ''RIMS'' link to information in this docket number. Click on the ''RIMS'' link, select ''Docket#'' from the RIMS Menu, and follow the instructions. For assistance with access to RIMS, the RIMS helpline can be reached at (202) 208–2222.

[4] Interventions may also be filed electronically via the Internet in lieu of paper. See the previous discussion on filing comments electronically.

Similarly, the ''CIPS'' link on the FERC Internet website provides access to the texts of formal documents issued by the Commission, such as orders, notices, and rulemakings. From the FERC Internet website, click on the ''CIPS'' link, select ''Docket #'' from the CIPS menu, and follow the instructions. For assistance with access to CIPS, the CIPS helpline can be reached at (202) 208–2474.

C.B. Spencer,

Acting Secretary.

[FR Doc. 02–2288 Filed 1–30–02; 8:45 am]

BILLING CODE 6717–01–P

DEPARTMENT OF ENERGY

Federal Energy Regulatory Commission

Notice of Intent To File Application for a New License

January 25, 2002.

Take notice that the following notice of intent has been filed with the Commission and is available for public inspection:

a. *Type of filing:* Notice of Intent to File an Application for New License.

b. *Project No:* 2100.

c. *Date filed:* January 11, 2002.

d. *Submitted By:* California Department of Water Resources.

e. *Name of Project:* Feather River.

f. *Location:* The Oroville Division, State Water Facilities are located on the Feather River, near the City of Oroville, in Butte County, California.

g. *Filed Pursuant to:* Section 15 of the Federal Power Act, 18 CFR 16.6.

h. Pursuant to Section 16.19 of the Commission's regulations, the licensee is required to make available the information described in section 16.7 of the regulations. Such information is available from the licensee at The California Department of Water Resources, 1416 Ninth Street, Room 742, Sacramento, California 94236–0001.

i. *FERC Contact:* James Fargo, 202–219–2848, *James.Fargo@Ferc.Gov.*

j. *Expiration Date of Current License:* January 31, 2007.

k. *Project Description:* The Oroville facilities consist of the existing Oroville Dam and Reservoir, the Edward Hyatt Powerplant, Thermalito Powerplant, Thermalito Diversion Dam Powerplant, Thermalito Forebay and Afterbay, and associated recreational and fish and wildlife facilities. The project has a total installed capacity of 762,000 kilowatts.

l. The licensee states its unequivocal intent to submit an application for a new license for Project No. 2100.

Pursuant to 18 CFR 16.9(b)(1) each application for a new license and any competing license applications must be filed with the Commission at least 24 months prior to the expiration of the existing license. All applications for license for this project must be filed by January 31, 2005.

A copy of the notice of intent is available for inspection and reproduction at the Commission's Public Reference Room, located at 888 First Street, NE, Room 2A, Washington, DC 20426, or by calling (202) 208–1371. The notice may be viewed on *http://www.ferc.fed.us/online/rims.htm* (call (202) 208–2222 for assistance). A copy is also available for inspection and reproduction at the address in item h above.

C.B. Spencer,

Acting Secretary.

[FR Doc. 02–2292 Filed 1–30–02; 8:45 am]

BILLING CODE 6717–01–P

DEPARTMENT OF ENERGY

Federal Energy Regulatory Commission

Notice of Non-Project Use of Project Lands and Soliciting Comments, Motions To Intervene, and Protests

January 25, 2002.

Take notice that the following hydroelectric application has been filed with the Commission and is available for public inspection:

a. *Application Type:* Non-Project Use of Project Lands.

b. *Project No.:* P–1494–224.

c. *Date Filed:* February 7, 2001.

d. *Applicant:* Grand River Dam Authority.

e. *Name of Project:* Pensacola Project.

f. *Location:* The project is located on the Grand (Neosho) River in Craig, Delaware, Mayes, and Ottawa Counties, Oklahoma. This project does not utilize Federal or Tribal lands.

g. *Filed Pursuant to:* Federal Power Act, 16 U.S.C. 791(a)–825(r).

h. *Applicant Contact:* Bob Sullivan, Grand River Dam Authority, P.O. Box 409, Vinita, OK 74301, (918) 256–5545.

i. *FERC Contact:* James Martin at *james.martin@ferc.gov,* or telephone (202) 208–1046.

j. *Deadline for filing comments, motions, or protests:* March 4, 2002.

All documents (original and eight copies) should be filed with: Magalie Roman Salas, Secretary, Federal Energy Regulatory Commission, 888 First Street, NE, Washington, DC 20426. Comments, protests and interventions may be filed electronically via the Internet in lieu of paper. *See,* 18 CFR 385.2001(a)(1)(iii) and the instructions on the Commission's Web site under the ''e-Filing'' link. Please include the project number (P–1494–224) on any comments or motions filed.

k. *Description of Project:* Grand River Dam Authority, licensee for the Pensacola Project, requests approval to grant permission to Southwinds Marina to install two new docks with 51 slips. The modifications would result in a total facility configuration of 6 docks with 144 slips. The proposed project is on Grand Lake in Section 35, Township 25 North, Range 22 East, Delaware County.

l. *Locations of the application:* A copy of the application is available for inspection and reproduction at the Commission's Public Reference Room, located at 888 First Street, NE, Room 2A, Washington, DC 20426, or by calling (202) 208–1371. The application may be viewed on the Web at *www.ferc.gov.* Call (202) 208–2222 for assistance. A copy is also available for inspection and reproduction at the address in item h above.

m. Individuals desiring to be included on the Commission's mailing list should so indicate by writing to the Secretary of the Commission.

n. *Comments, Protests, or Motions to Intervene*—Anyone may submit comments, a protest, or a motion to intervene in accordance with the requirements of Rules of Practice and Procedure, 18 CFR 385.210, .211, .214. In determining the appropriate action to take, the Commission will consider all protests or other comments filed, but only those who file a motion to intervene in accordance with the Commission's Rules may become a party to the proceeding. Any comments, protests, or motions to intervene must be received on or before the specified comment date for the particular application.

o. *Agency Comments*—Federal, state, and local agencies are invited to file comments on the described application. A copy of the application may be obtained by agencies directly from the Applicant. If an agency does not file comments within the time specified for filing comments, it will be presumed to have no comments. One copy of an agency's comments must also be sent to the Applicant's representatives.

C.B. Spencer,

Acting Secretary.

[FR Doc. 02–2293 Filed 1–30–02; 8:45 am]

BILLING CODE 6717–01–P

DEPARTMENT OF ENERGY

Federal Energy Regulatory Commission

[Docket Nos. RM01–12–000 et al.]

Electricity Market Design and Structure; Notice of Technical Conference

January 24, 2002.

In the matter of RT01–2–001, RT01–10–000, RT01–15–000, RT01–34–000, RT01–35–000, RT01–67–000, RT01–74–000, RT01–75–000, RT01–77–000, RT01–85–000, RT01–86–000, RT01–87–000, RT01–88–000, RT01–94–000, RT01–95–000, RT01–98–000, RT01–99–000, RT01–100–000, RT02–1–000, EL02–9–000, PJM Interconnection, L.L.C., Allegheny Electric Cooperative, Inc., Atlantic City Electric Company, Baltimore Gas & Electric Company, Delmarva Power & Light Company, Jersey Central Power & Light Company, Metropolitan Edison Company, PECO Energy Company, Pennsylvania Electric Company, PPL Electric Utilities Corporation, Potomac Electric Power Company, Public Service Electric & Gas Company, UGI Utilities Inc., Allegheny Power, Avista Corporation, Montana Power Company, Nevada Power Company, Portland General Electric Company, Puget Sound Energy, Inc., Sierra Pacific Power Company, Southwest Power Pool, Inc., Avista Corporation, Bonneville Power Administration, Idaho Power Company, Montana Power Company, Nevada Power Company, PacifiCorp, Portland General Electric Company, Puget Sound Energy, Inc., Sierra Pacific Power Company, GridFlorida LLC, Florida Power & Light Company, Florida Power Corporation, Tampa Electric Company, Carolina Power & Light Company, Duke Energy Corporation, South Carolina Electric & Gas Company, GridSouth Transco, LLC, Entergy Services, Inc., Southern Company Services, Inc., California Independent System Operator, Corporation, Bangor Hydro-Electric Company, Central Maine Power Company, National Grid USA, Northeast Utilities Service Company, The United Illuminating Company, Vermont Electric Power Company, ISO New England Inc., Midwest Independent System Operator, Alliance Companies, NSTAR Services Company, New York Independent System Operator, Inc., Central Hudson Gas & Electric Corporation, Consolidated Edison Company of New York, Inc., Niagara Mohawk Power Corporation, New York State Electric & Gas Corporation, Orange & Rockland Utilities, Inc., Rochester Gas & Electric Corporation, PJM Interconnection, L.L.C., Regional Transmission Organizations, Regional Transmission Organizations, Arizona Public Service Company, El Paso Electric Company, Public Service Company of New Mexico, Tucson Electric Power Company, WestConnect RTO, LLC

Take notice that the Staff of the Commission is convening a technical conference on February 5–7, 2002, to discuss the technical issues relating to the Commission's consideration of a

standard market design for wholesale electric power markets. The conference will feature panel discussions on: (1) Energy Markets and Operating Reserves; (2) Generation Adequacy; (3) Market Power Mitigation; (4) Transmission Rights and Financial Rights; (5) Transmission Tariff Transition; and (6) Minimizing Implementation Costs. This conference is intended to continue the discussions, begun at the public conference on January 22 and 23, 2002. Additional details about the conference will be provided in a subsequent notice and posted on the Commission's Web site under RTO Activities.

Members of the Commission may attend the conference and participate in the discussions. All interested persons may attend.

The conference will be held from approximately 9:30 a.m. to 5:00 p.m. each day, in a room to be designated at the offices of the Federal Energy Regulatory Commission, 888 First Street, NE, Washington, DC. The Commission is inviting selected panelists on these topics to participate in these workshops; it is not at this time entertaining requests to make presentations. There will be an opportunity for non-panelists to submit comments in the above dockets. For additional information about the conference, please contact Connie Caldwell at (202) 208–2027.

C.B. Spencer,

Acting Secretary.

[FR Doc. 02–2294 Filed 1–29–02; 8:45 am]

BILLING CODE 6717–01–P

DEPARTMENT OF ENERGY

Federal Energy Regulatory Commission

[Docket No. PA02–1–000]

Operational Audit of the California Independent System Operator; Notice of Filing and Request for Comments

January 25, 2002.

Take notice that on January 25, 2002, Vantage Consulting, Inc. filed a report entitled Operational Audit of the California Independent System Operator (Audit Report). The filing is in response to a Commission request for a proposal, dated October 9, 2001, to perform an operational audit of the California Independent System Operator Corporation (ISO). The Audit Report makes recommendations to the Commission with respect to prospective improvements in California markets, including what improvements could help the ISO in effectively performing its increasing responsibilities. The Audit Report states that the list of recommendations contained in Section I.C. of the Audit Report is comprehensive and that it would be almost impossible to simultaneously implement all the recommendations over the same time frame. Copies of the Audit Report are available for public inspection at the Commission in the above-docketed proceeding. The Audit Report is also available on the Internet at *ww.ferc.gov/electric/bulkpower.htm.*

We invite written comments on the Audit Report's list of specific recommendations set forth in Section I.C. Commenters are to state which of the recommendations, if any, they believe should be adopted and to prioritize those specific recommendations. Commenters also are to discuss an appropriate time frame for implementation of those recommendations that they believe should be adopted.

Comments are to be filed on two dates. The ISO is to file its comments on or before February 15, 2002. All other comments are to be filed on or before March 1, 2002. The latter may respond to the ISO's comments, in addition to commenting on the Audit Report as specified in the preceding paragraph.

Comments must contain an executive summary and must be no longer than 20 pages. To the extent possible, comments should be jointly filed by entities sharing similar views. Comments may be filed on paper or electronically via the Internet. Those filing electronically do not need to make a paper filing. For paper filings, the original and 14 copies of such comments should be submitted to the Office of the Secretary, Federal Energy Regulatory Commission, 888 First Street, NE, Washington DC 20426 and should refer to Docket No. PA02–1–000.

Comments filed via the Internet must be prepared in WordPerfect, MS Word, Portable Document Format, or ASCII format. To file the document, access the Commission's Web site at *www.ferc.gov* and click on ''e-Filing,'' and then follow the instructions. First time users will have to establish a user name and password. The Commission will send an automatic acknowledgment to the sender's e-Mail address upon receipt of comments.

User assistance for electronic filing is available at 202–208–0258 or by e-Mail to *efiling@ferc.gov.* Comments should not be submitted to the e-Mail address. All comments will be placed in the Commission's public files and will be available for inspection in the Commission's Public Reference Room at 888 First Street, NE, Washington DC 20426, during regular business hours. Additionally, all comments may be viewed, printed, or downloaded remotely via the Internet through FERC's home page using the RIMS link. User assistance for RIMS is available at 202–208–2222, or by e-mail to *RimsMaster@ferc.gov.*

C.B. Spencer,

Acting Secretary.

[FR Doc. 02–2369 Filed 1–30–02; 8:45 am]

BILLING CODE 6717–01–P

ENVIRONMENTAL PROTECTION AGENCY

[OPP–34239B; FRL–6819–8]

Lindane; Availability of Revised Risk Assessments

AGENCY: Environmental Protection Agency (EPA).

ACTION: Notice.

SUMMARY: This notice announces the availability of the revised risk assessments, which include some new information not available at the time of the preliminary risk assessment, and related documents for the organochlorine pesticide, lindane. In addition, this notice starts a 60–day public participation period during which the public is encouraged to submit comments on the new information not available previously in the preliminary risk assessments, and risk management ideas or proposals for lindane.. This action is in response to a joint initiative between EPA and the U.S. Department of Agriculture (USDA) to increase transparency in the tolerance reassessment process for organophosphate and certain other, non-organophosphate pesticides.

DATES: Comments, identified by docket control number OPP– 34239B, must be received by EPA on or before April 1, 2002.

ADDRESSES: Comments may be submitted by mail, electronically, or in person. Please follow the detailed instructions for each method as provided in Unit III. of the **SUPPLEMENTARY INFORMATION**. To ensure proper receipt by EPA, it is imperative that you identify docket control number OPP–34239B in the subject line on the first page of your response.

FOR FURTHER INFORMATION CONTACT: Mark T. Howard, Special Review and Reregistration Division (7508C), Office of Pesticide Programs, Environmental Protection Agency, 1200 Pennsylvania Ave., NW., Washington, DC 20460; telephone number: (703) 308–8172; e-mail address: howard.markt@epa.gov.

SUPPLEMENTARY INFORMATION:

I. Does this Action Apply to Me?

This action is directed to the public in general, nevertheless, a wide range of stakeholders will be interested in obtaining the revised risk assessments and submitting risk management comments on lindane including environmental, human health, and agricultural advocates; the chemical industry; pesticide users; and members of the public interested in the use of pesticides on food. As such, the Agency has not attempted to specifically describe all the entities potentially affected by this action. If you have any questions regarding the applicability of this action to a particular entity, consult the person listed under **FOR FURTHER INFORMATION CONTACT**.

II. How Can I Get Additional Information, Including Copies of this Document or Other Related Documents?

1. *Electronically*. You may obtain electronic copies of this document and other related documents from the EPA Internet Home Page at http://www.epa.gov/. To access this document, on the Home Page select ''Laws and Regulations,'' ''Regulations and Proposed Rules,'' and then look up the entry for this document under the ''**Federal Register**—Environmental Documents.'' You can also go directly to the **Federal Register** listings at http://www.epa.gov/fedrgstr/.

To access information about this pesticide and obtain electronic copies of the revised risk assessments and related documents mentioned in this notice, you can also go directly to the Home Page for the Office of Pesticide Programs (OPP) at http://www.epa.gov/pesticides/reregistration/lindane.

2. *In person*. The Agency has established an official record for this action under docket control number OPP–34239B. The official record consists of the documents specifically referenced in this action, any public comments received during an applicable comment period, and other information related to this action, including any information claimed as CBI. This official record includes the documents that are physically located in the docket, as well as the documents that are referenced in those documents. The public version of the official record does not include any information claimed as CBI. The public version of the official record, which includes printed, paper versions of any electronic comments submitted during an applicable comment period, is available for inspection in Rm. 119, Crystal Mall #2, 1921 Jefferson Davis Hwy., Arlington, VA, from 8:30 a.m. to 4 p.m., Monday through Friday, excluding legal holidays. The PIRIB telephone number is (703) 305–5805.

III. How Can I Respond to this Action?

A. How and to Whom Do I Submit Comments?

You may submit comments through the mail, in person, or electronically.To ensure proper receipt by EPA, it is imperative that you identify docket control number OPP–34239B in the subject line on the first page of your response.

1. *By mail*. Submit comments to: Public Information and Records Integrity Branch, Information Resources and Services Division (7502C), Office of Pesticide Programs, Environmental Protection Agency, 1200 Pennsylvania Ave., NW., Washington, DC 20460.

2. *In person or by courier*. Deliver comments to: Public Information and Records Integrity Branch, Information Resources and Services Division, Office of Pesticide Programs, Environmental Protection Agency, Rm. 119, Crystal Mall #2, 1921 Jefferson Davis Hwy., Arlington, VA. The PIRIB is open from 8:30 a.m. to 4 p.m., Monday through Friday, excluding legal holidays. The PIRIB telephone number is (703) 305–5805.

3. *Electronically*. Submit electronic comments by e-mail to: opp-docket@epa.gov, or you can submit a computer disk as described in this unit. Do not submit any information electronically that you consider to be CBI. Electronic comments must be submitted as an ASCII file, avoiding the use of special characters and any form of encryption. Comments and data will also be accepted on standard computer disks in WordPerfect 6.1/8.0 or ASCII file format. All comments in electronic form must be identified by the docket control number OPP–34239B. Electronic comments may also be filed online at many Federal Depository Libraries.

B. How Should I Handle CBI Information that I Want to Submit to the Agency?

Do not submit any information electronically that you consider to be CBI. You may claim information that you submit to EPA in response to this document as CBI by marking any part or all of that information as CBI. Information so marked will not be disclosed except in accordance with procedures set forth in 40 CFR part 2. In addition to one complete version of the comment that includes any information claimed as CBI, a copy of the comment that does not contain the information claimed as CBI must be submitted for inclusion in the public version of the official record. Information not marked confidential will be included in the public version of the official record without prior notice. If you have any questions about CBI or the procedures for claiming CBI, please consult the person listed under **FOR FURTHER INFORMATION CONTACT**.

IV. What Action is EPA Taking in this Notice?

EPA is making available for public viewing the revised risk assessments, which include some new information not available at the time of the preliminary risk assessments, and related documents for the organochlorine pesticide, lindane. These documents have been developed as part of the pilot public participation process that EPA and USDA are now using for involving the public in the reassessment of pesticide tolerances under the Food Quality Protection Act (FQPA), and the reregistration of individual pesticides under the Federal Insecticide, Fungicide, and Rodenticide Act (FIFRA). The pilot public participation process was developed as part of the EPA–USDA Tolerance Reassessment Advisory Committee (TRAC), which was established in April 1998, as a subcommittee under the auspices of EPA's National Advisory Council for Environmental Policy and Technology. A goal of the pilot public participation process is to find a more effective way for the public to participate at critical junctures in the Agency's development of organophosphate and certain other non-organophosphate pesticide risk assessments and risk management decisions. EPA and USDA began implementing this pilot process in August 1998, to increase transparency and opportunities for stakeholder consultation. The documents being released to the public through this notice provide some new information on the human health effects of lindane, and information on the revisions that were made to the lindane preliminary risk assessments, which where released to the public August 29, 2001 (66 FR 45677) (FRL–6783–8), through a notice in the **Federal Register**.

In addition, this notice starts a 60–day public participation period during which the public is encouraged to submit comments on the new information not available previously during the earlier public comment period for the lindane preliminary risk assessment, and risk management proposals or other comments on risk management for lindane. The Agency is providing an opportunity, through this

notice, for interested parties to provide written comments on the new lindane health effects information as well as risk management proposals or ideas on lindane. Such comments and proposals could address ideas about how to manage dietary, occupational, or ecological risks on specific lindane use sites or crops across the United States or in a particular geographic region of the country. To address dietary risk, for example, commenters may choose to discuss the feasibility of lower application rates, increasing the time interval between application and harvest (''pre–harvest intervals''), modifications in use, or suggest alternative measures to reduce residues contributing to dietary exposure. For occupational risks, commenters may suggest personal protective equipment or technologies to reduce exposure to workers and pesticide handlers. For ecological risks, commenters may suggest ways to reduce environmental exposure, e.g., exposure to birds, fish, mammals, and other non-target organisms. All comments and proposals must be received by EPA on or before April 1, 2002 at the addresses given under Unit III.A. Comments and proposals will become part of the Agency record for the pesticide specified in this notice.

List of Subjects

Environmental protection, Chemicals, Pesticides and pests.

Dated: January 17, 2002.

Lois A. Rossi,

Director, Special Review and Reregistration Division, Office of Pesticide Programs.

[FR Doc. 02–2382 Filed 1–30–02; 8:45 am]

BILLING CODE 6560–50–S

FEDERAL COMMUNICATIONS COMMISSION

[WT Docket No. 01–287; DA 01–2365]

Great Western Aviation, Inc. and Utah Jet Center, LLC

AGENCY: Federal Communications Commission.

ACTION: Notice.

SUMMARY: In this document, the FCC consolidates the proceeding of Great Western Aviation and Utah Jet Center LLC., application for renewal of aeronautical advisory (unicom).station KQA7 in Logan, Utah. This consolidation allows both parties to have a comparative hearing. This gives the commission an opportunity to determine which applicant would provide the public with better unicom service.

ADDRESSES: Please file notifications of availability with the Secretary, of the Federal Communications Commission, Room 1–C804, 445 Twelfth Street, SW., Washington, DC 20554.

FOR FURTHER INFORMATION CONTACT: Roberto Mussendenn., Wireless Telecommunications Bureau, at (202) 418–1428.

SUPPLEMENTARY INFORMATION: This is a summary of the Federal Communications Commission's Hearing Designator Order, DA 01–2365, adopted on October 11, 2001 and released on October 12, 2001. The full text is available for inspection and copying during normal business hours in the FCC Reference Center, Room CY–A257, 445 12th Street, SW., Washington, DC 20554. The complete text may be purchased from the Commission's copy contractor, Qualex International, 445 12th Street, SW., Room CY–B402, Washington, DC 20554. The full text may also be downloaded at: www.fcc.gov. Alternative formats are available to persons with disabilities by contacting Martha Contee at (202) 418–0260 or TTY (202) 418–2555.

On November 24, 2000, Great Western Aviation, Inc. (Great Western) filed an application for renewal of aeronautical advisory (unicom) station KQA7 in Logan, Utah. Unicom stations provide information concerning flying conditions, weather, availability of ground services, and other information to promote the safe and expeditious operation of aircraft. On December 7, 2000, Utah Jet Center, LLC (Utah Jet Center) filed an application for a new unicom station at the same location. Both applicants propose to provide service at Logan-Cache Airport, where there is no control tower or FAA flight service station. Under § 87.215(b) of the Commission's rules, only one unicom station may be licensed at such airports. Accordingly, these applications are mutually exclusive and must therefore be designated for comparative hearing.

A. Ordering Clauses

1. Accordingly, *it is ordered* that, pursuant to section 309(e) of the Communications Act of 1934, as amended, 47 U.S.C. 309(e), and § 1.221(a) of the Commission's Rules, 47 CFR 1.221(a), the parties' applications are designated for hearing in a consolidated proceeding to resolve the issues.

2. *It is further ordered* that the burden of proceeding with the introduction of evidence with respect to all the issues listed here shall be upon Great Western and Utah Jet Center with respect to their applications.

3. *It is further ordered* that, to avail themselves of the opportunity to be heard, the applicants, Great Western and Utah Jet, must each file with the Commission, within 20 days of the mailing of this Hearing Designation Order, a written notice of appearance in triplicate, accompanied by a processing fee of $9,020.00, stating their intentions to appear on the date fixed for the hearing and to present evidence on the issues specified in this Order, in accordance 47 CFR. 1.221(c), (f) and (g).

4. The Commission's Reference Information Center SHALL SEND a copy of this Order, via Certified Mail—Return Receipt Requested, to Great Western Aviation, 900 West 2500 North, Logan, Utah 84321, and to Utah Jet Center, LLC, P.O. Box 705, Logan, Utah 84321.

5. The Secretary of the Commission shall cause to have this *Hearing Designation Order* or a summary thereof published in the **Federal Register**.

6. The time and place of the comparative hearing will be specified in a subsequent Order, issued by the Enforcement Bureau.

Federal Communications Commission.

William F. Caton,

Deputy Secretary.

[FR Doc. 02–2283 Filed 1–30–02; 8:45 am]

BILLING CODE 6712–01–P

FEDERAL COMMUNICATIONS COMMISSION

[DA 01–2435]

Implementation of the International Telecommunication Union Charges for Satellite Network Filings

AGENCY: Federal Communications Commission.

ACTION: Notice.

SUMMARY: In this document, the Commission establishes the information that U.S. satellite operators must file with the Commission for compliance with the International Telecommunication Union (ITU) satellite cost recovery program, as modified by the recent meeting of the ITU Council. Specifically, the Commission requires licensees and applicants for certain satellite network applications and filings to provide specific information regarding the contact persons for such charges. Contact information must accompany all relevant future filings. This Notice will help U.S. satellite operators meet the requirements of the ITU as the ITU implements its recently adopted cost recovery-based charging process.

DATES: Satellite operators with pending filings subject to ITU fees must submit the required information March 4, 2002.

ADDRESSES: Send contact information to Oleg Efrimov, Satellite Engineering Branch, International Bureau, c/o Office of the Secretary, Federal Communications Commission, Washington, DC 20554.

FOR FURTHER INFORMATION CONTACT: Jacqueline Spindler, 202 418 1479, *jspindle@fcc.gov*.

SUPPLEMENTARY INFORMATION: This is a summary of the Public Notice—International Bureau Information, DA 01–2435, adopted October 19, 2001, and released October 19, 2001. The complete text of this Notice is available for inspection and copying during normal business hours in the FCC Reference Information Center, Courtyard Level, 445 12th Street, SW., Washington, DC 20554 and also may be purchased from the Commission's copy contractor, Qualex International, Portals II, 445 12th Street, SW., Room CY–B402, Washington, DC 20554.

1. The Commission establishes the information that U.S. satellite operators must file with the Commission for compliance with the International Telecommunication Union (ITU) satellite cost recovery program, as modified by the recent meeting of the ITU Council.

2. The information to be provided is as follows: (1) Name of contact, (2) name of company and office, (3) address, (4) e-mail address, (5) telephone number, and (6) fax number.

3. The point of contact may be a party other than the applicant or licensee, acting pursuant to an agreement between the applicant or licensee and the third party in which the third party assumes responsibility for payment of these fees.

4. Satellite filings subject to ITU cost recovery charges include certain advance publication submissions, requests for coordination or agreement (Articles S9 and S11 of the Radio Regulations), and requests for modification of the space service plans contained in Appendices S30, S30A, and S30B of the Radio Regulations that were received by the ITU after November 7, 1998. Advance publication filings not subject to coordination procedures (generally non-geosynchronous orbit (NGSO) systems) that were received by the ITU after November 7, 1998 are also subject to cost recovery.

Federal Communications Commission.

John V. Giusti,

Chief, International Spectrum and Communications Policy Branch, International Bureau.

[FR Doc. 02–2362 Filed 1–30–02; 8:45 am]

BILLING CODE 6712–01–P

FEDERAL MARITIME COMMISSION

Notice of Agreement(s) Filed

The Commission hereby gives notice of the filing of the following agreement(s) under the Shipping Act of 1984. Interested parties can review or obtain copies of agreements at the Washington, DC offices of the Commission, 800 North Capitol Street, NW., Room 940. Interested parties may submit comments on an agreement to the Secretary, Federal Maritime Commission, Washington, DC 20573, within 10 days of the date this notice appears in the **Federal Register**.

Agreement No.: 011788.
Title: Green/Seatrade Cooperative Working Agreement.
Parties:
Green Chartering AS
Seatrade Group N.V.
Synopsis: The proposed agreement establishes a vessel-sharing agreement for the transportation of refrigerated cargoes from United States East and Gulf ports to ports in Northern Europe.

Agreement No.: 201072–003.
Title: New Orleans-Americana Ships Group Crane Lease Agreement.
Parties:
Board of Commissioners of the Port of New Orleans
Americana Ships and Affiliates.
Synopsis: The amendment revises crane usage payments and extends the agreement through December 31, 2002.

Agreement No.: 201073–003.
Title: New Orleans/Cosco-K Line-Yang Ming Crane Rental Agreement.
Parties:
Board of Commissioners of the Port of New Orleans,
Cosco North America, Inc.,
''K'' Line America, Inc.,
Yang Ming Line.
Synopsis: The amendment revises crane usage payments and extends the agreement through December 31, 2002.

Dated: January 25, 2002.

By Order of the Federal Maritime Commission.

Bryant L. VanBrakle,

Secretary.

[FR Doc. 02–2274 Filed 1–30–02; 8:45 am]

BILLING CODE 6730–01–P

FEDERAL MARITIME COMMISSION

Sunshine Act Meeting

AGENCY HOLDING THE MEETING: Federal Maritime Commission.

FEDERAL REGISTER CITATION OF PREVIOUS ANNOUNCEMENT: 67 FR 3708.

PREVIOUSLY ANNOUNCED TIME AND DATE OF THE MEETING: 10 a.m.—January 30, 2002.

CHANGE IN THE MEETING: Addition of item in the CLOSED portion of the meeting.

Item 2—Application of the Delta Queen Steamboat Co. to Approve a Section 3, Pub. L. 89–777 Escrow Agreement and issue certificates for the vessels DELTA QUEEN and MISSISSIPPI QUEEN.

CONTACT PERSON FOR MORE INFORMATION: Bryant L. VanBrakle, Secretary, (202) 523–5725.

Bryant L. Van Brakle,

Secretary.

[FR Doc. 02–2504 Filed 1–29–02; 12:45 pm]

BILLING CODE 6730–01–M

FEDERAL MARITIME COMMISSION

Ocean Transportation Intermediary License; Revocations

The Federal Maritime Commission hereby gives notice that the following Ocean Transportation Intermediary licenses have been revoked pursuant to section 19 of the Shipping Act of 1984 (46 U.S.C. app. 1718) and the regulations of the Commission pertaining to the licensing of Ocean Transportation Intermediaries, effective on the corresponding date shown below:

License Number: 3754F.
Name: AFS Logistics, Inc.
Address: 8585 Business Park Drive, Shreveport, LA 71105.
Date Revoked: January 11, 2002.
Reason: Failed to maintain a valid bond.

License Number: 13339N.
Name: Box Consolidators (USA) L.L.C.
Address: 20 Corporation Row, Edison, NJ 08817.
Date Revoked: December 8, 2001.
Reason: Failed to maintain a valid bond.

License Number: 4256F.
Name: Brixton Management, Inc.
Address: 13560 Berlin Station Road, Berlin Center, OH 44401.
Date Revoked: January 10, 2002.
Reason: Failed to maintain a valid bond.

License Number: 1171NF.
Name: Caribbean Freight Forwarders, Inc.
Address: 4715 NW 72nd Avenue, Miami, FL 33166.
Date Revoked: January 2, 2002.
Reason: Failed to maintain a valid bond.

License Number: 16848N.
Name: eKKa Forwarding Inc.
Address: 223 Bergen Turnpike, Bldg. 3, Ridgefield Park, NJ 07660.
Date Revoked: December 15, 2001.
Reason: Failed to maintain a valid bond.

License Number: 4098F.
Name: Gaeli, Inc.
Address: 10050 NW 116th Way, Ste. 15, Medley, FL 33178.
Date Revoked: January 10, 2002.
Reason: Failed to maintain a valid bond.

License Number: 3656NF.
Name: Gulfstream Freight Services, Inc. dba Gulfstream Logistics.
Address: 11919 SW 130th Street, Miami, FL 33186.
Date Revoked: December 6, 2001.
Reason: Failed to maintain valid bonds.

License Number: 17090N.
Name: Inter-Connect Transportation, Inc.
Address: 8901 S. La Cienega Blvd., Ste. 210, Inglewood, CA 90301.
Date Revoked: December 8, 2001.
Reason: Failed to maintain a valid bond.

License Number: 3690NF.
Name: Inter-Freight Logistics, Inc.
Address: 5401 W. Kennedy Boulevard, Ste. 999, Tampa, FL 33609.
Date Revoked: December 28, 2001.
Reason: Surrendered license voluntarily.

License Number: 4335N.
Name: International Services, Inc.
Address: 2907 Empress Ct., Valrico, FL 33594.
Date Revoked: December 5, 2001.
Reason: Failed to maintain a valid bond.

License Number: 15712N.
Name: J.H.K. Transportation System, Inc.
Address: 5210 12th Street East, Ste. B, Fife, WA 98424.
Date Revoked: December 30, 2001.
Reason: Failed to maintain a valid bond.

License Number: 12473N.
Name: Jupiter Express, Inc.
Address: 156–19 76th Street, Howard Beach, NY 11414.
Date Revoked: December 8, 2001.
Reason: Failed to maintain a valid bond.

License Number: 4637F.
Name: Lion Cargo Brokers, Inc. dba Polaris Ocean Line.
Address: 8055 NW 77th Court, Ste. 3, Medley, FL 33166.
Date Revoked: January 2, 2002.
Reason: Failed to maintain a valid bond.

License Number: 4215F.
Name: Logistics Management International, Inc.
Address: 816 Thorndale Avenue, Bensenville, IL 60106.
Date Revoked November 7, 2001.
Reason: Failed to maintain a valid bond.

License Number: 4066N.
Name: Maracargo Inc.
Address: 7700 NW 79th Place, Ste. 1, Miami, FL 33166.
Date Revoked: November 4, 2001.
Reason: Failed to maintain a valid bond.

License Number: 3326N.
Name: Modern Cargo Services Inc.
Address: 11265 NW 131st Street, Medley, FL 33178.
Date Revoked: November 1, 2001.
Reason: Failed to maintain a valid bond.

License Number: 16462N.
Name: Multi Transport Inc.
Address: 8422 NW 66th Street, Miami, FL 33166.
Date Revoked: December 29, 2001.
Reason: Failed to maintain a valid bond.

License Number: 4592N.
Name: Natasha International Freight, Inc.
Address: 12912 SW 133 Court, Ste. A, Miami, FL 33186.
Date Revoked: December 8, 2001.
Reason: Failed to maintain a valid bond.

License Number: 12459N.
Name: PSD International, Inc.
Address: 220 W. Ivy Avenue, Inglewood, CA 90302.
Date Revoked: December 15, 2001.
Reason: Failed to maintain a valid bond.

License Number: 16083F.
Name: Palmetto Freight Forwarding Group.
Address: 9695 NW 79th Avenue, Bay 16, Hialeah, FL 33016.
Date Revoked: December 6, 2001.
Reason: Failed to maintain a valid bond.

License Number: 0690F.
Name: Robert E. Landweer & Co., Inc.
Address: 911 Western Avenue, Ste. 208, Seattle, WA 98104.
Date Revoked: December 16 2001.
Reason: Failed to maintain a valid bond.

License Number: 15682N.
Name: S/J Americas Service, LLC dba S/J Americas Service.
Address: 11821 I–H 10 East, Ste. 630, Houston, TX 77029.
Date Revoked: December 5, 2001.
Reason: Failed to maintain a valid bond.

License Number: 3406N.
Name: Simmons International Express, Inc.
Address: 101 E. Clarendon Street, Prospect Heights, IL 60070.
Date Revoked: January 4, 2002.
Reason: Failed to maintain a valid bond.

License Number: 4587NF.
Name: Toriello Passarelli, Inc. dba Toriello Freight International.
Address: 8611 NW 72nd Street, Miami, FL 33166.
Date Revoked: August 10, 2001.
Reason: Failed to maintain valid bonds.

License Number: 4511F.
Name: Total Logistic Control, LLC.
Address: 8300 Logistics Drive, Zeeland, MI 49464.
Date Revoked: January 6, 2002.
Reason: Failed to maintain a valid bond.

License Number: 4551F.
Name: Washington World Trading Corp. dba Washington World International Freight Forwarders.
Address: 10411 NW 28th Street, Ste. C–103, Miami, FL 33172.
Date Revoked: December 26, 2001.
Reason: Failed to maintain a valid bond.

Sandra L. Kusumoto,
Director, Bureau of Consumer Complaints and Licensing.

[FR Doc. 02–2273 Filed 1–30–02; 8:45 am]
BILLING CODE 6730–01–P

FEDERAL MARITIME COMMISSION

Ocean Transportation Intermediary License Reissuance

Notice is hereby given that the following Ocean Transportation Intermediary license has been reissued by the Federal Maritime Commission pursuant to section 19 of the Shipping Act of 1984, as amended by the Ocean Shipping Reform Act of 1998 (46 U.S.C. app. 1718) and the regulations of the Commission pertaining to the licensing of Ocean Transportation Intermediaries, 46 CFR 515.

License No.	Name/Address	Date reissuance
16838N	Webtrans Logistics, Inc. dba ANC International, 21136 S. Wilmington Avenue, #110, Carson, CA 90810.	December 19, 2001.

Sandra L. Kusumoto,

Director, Bureau of Consumer Complaints and Licensing.

[FR Doc. 02–2271 Filed 1–30–02; 8:45 am]

BILLING CODE 6730–01–P

FEDERAL MARITIME COMMISSION

Ocean Transportation Intermediary License; Applicant

Notice is hereby given that the following applicant has filed with the Federal Maritime Commission an application for license as Non-Vessel Operating Common Carrier and Ocean Freight Forwarder—Ocean Transportation Intermediary pursuant to section 19 of the Shipping Act of 1984 as amended (46 U.S.C. app. 1718 and 46 CFR 515).

Persons knowing of any reason why the following applicant should not receive a license are requested to contact the Office of Transportation Intermediaries, Federal Maritime Commission, Washington, DC 20573.

Non-Vessel Operating Common Carrier Ocean Transportation Intermediary Applicant:

Security Storage Company of Washington, 1701 Florida Avenue, NW., Washingnton, DC 20009–1697, Officers: Larry DePace, Senior Vice President (Qualifying Individual), Charles R. Lawrence, President/CEO.

Dated: January 25, 2002.

Bryant L. VanBrakle,

Secretary.

[FR Doc. 02–2272 Filed 1–30–02; 8:45 am]

BILLING CODE 6730–01–P

DEPARTMENT OF HEALTH AND HUMAN SERVICES

Food and Drug Administration

[Docket No. 01D–0584]

Draft ''Guidance for Industry: Use of Nucleic Acid Tests on Pooled Samples From Source Plasma Donors to Adequately and Appropriately Reduce the Risk of Transmission of HIV–1 and HCV''; Availability

AGENCY: Food and Drug Administration, HHS.

ACTION: Notice.

SUMMARY: The Food and Drug Administration (FDA) is announcing the availability of a draft document entitled ''Guidance for Industry: Use of Nucleic Acid Tests on Pooled Samples From Source Plasma Donors to Adequately and Appropriately Reduce the Risk of Transmission of HIV–1 and HCV'' dated December 2001. The draft guidance document, when finalized, would inform all establishments that manufacture Source Plasma that FDA has approved nucleic acid tests (NAT) to identify human immunodeficiency virus type 1 (HIV–1) and hepatitis C virus (HCV) in Source Plasma donations. The draft document recommends that manufacturers submit a prior approval supplement to a biologics license application (BLA) to implement HIV–1 and HCV NAT by a specified date.

DATES: Submit written or electronic comments on the draft guidance to ensure their adequate consideration in preparation of the final document by May 1, 2002. General comments on agency guidance documents are welcome at any time.

ADDRESSES: Submit written requests for single copies of the draft guidance to the Office of Communication, Training, and Manufacturers Assistance (HFM–40), Center for Biologics Evaluation and Research (CBER), Food and Drug Administration, 1401 Rockville Pike, Rockville, MD 20852–1448. Send one self-addressed adhesive label to assist the office in processing your requests. The document may also be obtained by mail by calling the CBER Voice Information System at 1–800–835–4709 or 301–827–1800, or by fax by calling the FAX Information System at 1–888–CBER–FAX or 301–827–3844. See the **SUPPLEMENTARY INFORMATION** section for electronic access to the draft guidance document.

Submit written comments on the document to the Dockets Management Branch (HFA–305), Food and Drug Administration, 5630 Fishers Lane, rm. 1061, Rockville, MD 20852. Submit electronic comments to http://www.fda.gov/dockets/ecomments.

FOR FURTHER INFORMATION CONTACT: Nathaniel L. Geary, Center for Biologics Evaluation and Research (HFM–17), Food and Drug Administration, 1401 Rockville Pike, Rockville, MD 20852–1448, 301–827–6210.

SUPPLEMENTARY INFORMATION:

I. Background

FDA is announcing the availability of a draft document entitled ''Guidance for Industry: Use of Nucleic Acid Tests on Pooled Samples From Source Plasma Donors to Adequately and Appropriately Reduce the Risk of Transmission of HIV–1 and HCV'' dated December 2001. FDA's final rule (66 FR 31146, June 11, 2001) entitled ''Requirements for Testing Human Blood Donors for Evidence of Infection Due to Communicable Diseases'' became effective on December 10, 2001. The provision in 21 CFR 610.40(b) of the rule provides that manufacturers ''must perform one or more screening tests to adequately and appropriately reduce the risk of transmission of communicable disease agents'' (66 FR 31146 at 31162). As we noted in the preamble to the final rule, the standard for adequate and appropriate testing will change as new testing technology is approved by FDA. We explained, ''we intend to regularly issue guidance describing those tests that we believe would adequately and appropriately reduce the risk of transmission of communicable disease agents'' (66 FR 31146 at 31149).

The availability of NAT to identify HIV–1 and HCV will change the testing protocol that should be used to adequately and appropriately reduce the risk of transmission of those diseases. The draft document recommends that manufacturers submit a prior approval supplement to a BLA to implement HIV–1 and HCV NAT by a specified date.

This draft guidance is being issued consistent with FDA's good guidance practices regulation (21 CFR 10.115). This draft guidance document represents the agency's current thinking on this topic. It does not create or confer any rights for or on any person and does not operate to bind FDA or the public. An alternative approach may be used if such approach satisfies the requirement of the applicable statutes and regulations.

II. Comments

This draft document is being distributed for comment purposes only and is not intended for implementation at this time. Interested persons may submit to the Dockets Management Branch (address above) written or electronic comments regarding this draft guidance document. Submit written or electronic comments to ensure adequate consideration in preparation of the final document by May 1, 2002. Two copies of any comments are to be submitted, except individuals may submit one copy. Comments should be identified with the docket number found in the brackets in the heading of this document. A copy of the document and received comments are available for public examination in the Dockets Management Branch between 9 a.m. and 4 p.m., Monday through Friday.

III. Electronic Access

Persons with access to the Internet may obtain the document at either http://www.fda.gov/cber/guidelines.htm or http://www.fda.gov/ohrms/dockets/default.htm.

Dated: January 23, 2002.

Margaret M. Dotzel,

Associate Commissioner for Policy.

[FR Doc. 02–2321 Filed 1–30–02; 8:45 am]

BILLING CODE 4160–01–S

DEPARTMENT OF HEALTH AND HUMAN SERVICES

Health Resources and Services Administration

Agency Information Collection Activities: Proposed Collection: Comment Request

In compliance with the requirement for opportunity for public comment on proposed data collection projects (section 3506(c)(2)(A) of Title 44, United States Code, as amended by the Paperwork Reduction Act of 1995, Pub. L. 104–13), the Health Resources and Services Administration (HRSA) publishes periodic summaries of proposed projects being developed for submission to the Office of Management and Budget under the Paperwork Reduction Act of 1995. To request more information on the proposed project or to obtain a copy of the data collection plans and draft instruments, call the HRSA Reports Clearance Officer on (301) 443–1129.

Comments are invited on: (a) Whether the proposed collection of information is necessary for the proper performance of the functions of the Agency, including whether the information shall have practical utility; (b) the accuracy of the Agency's estimate of the burden of the proposed collection of information; (c) ways to enhance the quality, utility, and clarity of the information to be collected; and (d) ways to minimize the burden of the collection of information on respondents, including the use of automated collection techniques or other forms of information technology.

Proposed Project: The National Health Service Corps (NHSC), Professional Training and Information Questionnaire (PTIQ), (OMB No. 0915–0208)—Revision

The National Health Service Corps (NHSC) of the HRSA's Bureau of Health Professions (BHPr), is committed to improving the health of the Nation's underserved by uniting communities in need with caring health professionals and by supporting communities' efforts to build better systems of care.

The National Health Service Corps (authorized by the Public Health Services Act, section 331) collects data on its programs to ensure compliance with legislative mandates and to report to Congress and policymakers on program accomplishments. To meet these objectives, the NHSC requires a core set of information collected annually that is appropriate for monitoring and evaluating performance and reporting on annual trends.

The PTIQ is used to collect data related to professional issues from NHSC obligated Scholarship Program Recipients including physicians, physician assistants (PAs), nurse practioners (NPs), certified nurse midwives (CNMs), and other disciplines in the current year's placement cycle. This data is used to match an individual health care professional with the most appropriate clinical practice setting.

The PTIQ will be mailed twelve months in advance of the intended service availability date. Estimates of annualized reporting burden are as follows:

Type of respondent	Number of respondents	Responses per respondent	Hours per response (minutes)	Total burden hours
Health Care Professionals	311	1	5	26

Send comments to Susan G. Queen, Ph.D., HRSA Reports Clearance Officer, Room 11–05, Parklawn Building, 5600 Fishers Lane, Rockville, MD 20857. Written comments should be received within 60 days of this notice.

Dated: January 25, 2002.

Jane M. Harrison,

Director, Division of Policy Review and Coordination.

[FR Doc. 02–2296 Filed 1–31–02; 8:45 am]

BILLING CODE 4165–15–P

DEPARTMENT OF HEALTH AND HUMAN SERVICES

Health Resources and Services Administration

Agency Information Collection Activities: Proposed Collection: Comment Request

In compliance with the requirement for opportunity for public comment on proposed data collection projects (section 3506(c)(2)(A) of Title 44, United States Code, as amended by the Paperwork Reduction Act of 1995, Pub. L. 104–13), the Health Resources and Services Administration (HRSA) publishes periodic summaries of proposed projects being developed for submission to the Office of Management and Budget under the Paperwork Reduction Act of 1995. To request more information on the proposed project or to obtain a copy of the data collection plans and draft instruments, call the HRSA Reports Clearance Officer on (301) 443–1129.

Comments are invited on: (a) Whether the proposed collection of information is necessary for the proper performance of the functions of the Agency, including whether the information shall have practical utility; (b) the accuracy of the Agency's estimate of the burden of the proposed collection of information; (c) ways to enhance the quality, utility, and clarity of the information to be collected; and (d) ways to minimize the burden of the collection of information on respondents, including the use of automated collection techniques or other forms of information technology.

Proposed Project: National Practitioner Data Bank for Adverse Information on Physicians and Other Health Care Practitioners: Regulations and Forms (OMB No. 0915–0126)—Revision

The National Practitioner Data Bank (NPDB) was established through Title IV of Public Law 99–660, the Health Care Quality Improvement Act of 1986, as amended. Final regulations governing the NPDB are codified at 45 CFR part 60. Responsibility for NPDB implementation and operation resides in the Bureau of Health Professions, Health Resources and Services Administration, U.S. Department of Health and Human Services (DHHS). The NPDB began operation on September 1, 1990.

The intent of Title IV of Public Law 99–660 is to improve the quality of health care by encouraging hospitals, State licensing boards, professional societies, and other entities providing health care services, to identify and discipline those who engage in unprofessional behavior; and to restrict the ability of incompetent physicians, dentists, and other health care practitioners to move from State to State

without disclosure of practitioner previous damaging or incompetent performance.

The NPDB acts primarily as a flagging system; its principal purpose is to facilitate comprehensive review of practitioners' professional credentials and background. Information on medical malpractice payments, adverse licensure actions adverse clinical privileging actions, adverse professional society actions, and Medicare/Medicaid exclusions is collected from, and disseminated to, eligible entities. It is intended that NPDB information should be considered with other relevant information in evaluating a practitioner's credentials.

This request is for a revision of reporting and querying forms previously approved on April 30, 1999. The reporting forms and the request for information forms (query forms) must be accessed, completed, and submitted to the NPDB electronically through the NPDB website at *www.npdb-hipdb.com.* All reporting and querying is performed through this secure website.

This request also includes changes to the NPDB forms as a result of the potential implementation of section 1921 of the Social Security Act (section 1921), which is now being considered. Section 1921 expands the scope of the NPDB by permitting additional entities such as agencies administering Federal health care programs, State Medicaid fraud control units, utilization and quality control peer review organizations, and certain law enforcement officials to query the NPDB for adverse licensure actions and other negative actions or findings on health care practitioners and entities licensed or otherwise authorized by a State (or a political subdivision) to provide health care services. Therefore, beginning with section 60.9, sections have been renumbered based on the possible implementation of section 1921. Additionally, due to overlap in requirements for the Healthcare Integrity and Protection Data Bank (HIPDB), some of the NPDB's burden has been subsumed under the HIPDB.

Estimates of burden are as follows:

Regulation citation	Number of respondents	Responses per respondent	Hours per response (minutes)	Total burden hours
Reports				
60.6(a) Errors & Omissions	450	4.22	15	475
60.6(b) Revisions to Actions	110	1.45	30	80
60.7(b) Medical Malpractice Payment Reports	660	28.03	45	13,875
60.8(b) Adverse Action Reports—Licensure Actions by Boards of Medical Examiners	[1] 0	0	0	0
60.9(b) Adverse Action Reports—Licensure Actions: Submission by State Licensing Boards Reporting by State Licensing Authorities	[2] 0	0	0	0
60.10 Adverse Action Reports—Negative Actions or Findings: Submission by Peer Review Organization/Accreditation Entity	58	8.62	45	375
Reporting by State Licensing Authorities	50	10	15	125
60.11(a) Adverse Action Reports—Clinical Privileges & Professional Society	1,000	1.2	45	900
60.11(c) Requests for Hearings by Entities	1	1	480	8
Access to Data (Queries and Self Queries)				
60.12(a)(1) Queries by Hospital-Practitioner Applications	6,000	40	5	20,000
60.12(a)(2) Queries by Hospitals—Two Yr. Cycle	6,000	160	5	80,000
60.13(a)(1)(i) Disclosures to Hospitals	[3] 0	0	0	0
60.13(a)(1)(ii) Disclosure to Practitioners (Self Queries)	[4] 0	0	0	0
60.13(a)(1)(iii) Queries by Practitioner Licensure Boards	125	120	5	1,250
60.13(a)(1)(iv) Queries by Non-Hospital Health Care Entities	4,000	550	5	183,333
60.13(a)(1)(v) Queries by Plaintiffs' Attorneys	5	1	30	3
60.13(a)(1)(vi) Queries by Non-Hospital Health Care Entities-Peer Review	[5] 0	0	0	0
60.13(a)(1)(vii) Requests by Researchers for Aggregate Data	100	1	30	50
60.13(a)(2)(i) through (vi) Queries by section 1921—only Eligible Entities	[6] 425	276.47	5	9,792
60.13(a)(2)(vii) Queries by Hospitals and other Health Care Entities	[7] 0	0	0	0
60.13(a)(2)(viii) Self Queries by Health Care Practitioners and Entities	[8] 0	0	0	0
60.13(a)(2)(ix) Requests by Researchers for Aggregate Data	[9] 0	0	0	0
Disputed Reports/Secretarial Reviews				
60.16(b) Practitioner Places a Report in Disputed Status	1,050	1	15	263
60.16(b) Practitioner Requests for Secretarial Review	115	1	480	920
60.16(b) Practitioner Statement	2,400	1	60	2,400
Access and Admin. Forms				
60.3 Entity Registration—Initial	2,000	1	60	2,000
60.3 Entity Registration-Update	1,225	1	5	102
60.13(a) Authorized Agent Designation—Initial	500	1	15	125
60.13(a) Authorized Agent Designation—Update	50	1	5	4
60.14(c) Account Discrepancy Report	300	1	15	75
60.14(c) Electronic Transfer of Funds Authorization	400	1	15	100
60.3 Entity Registration— Reactivation	100	1	60	100
Total				316,355

[1] Included in estimate for reporting of adverse licensure actions to the HIPDB in 45 CFR part 61.
[2] Included in estimate for reporting of adverse licensure actions to the HIPDB in 45 CFR part 61.
[3] Included in estimate for 60.12(a)(1).
[4] Included in estimate for self queries in the HIPDB in 45 CFR part 61.
[5] Included in estimate for non-hospital health care entity queries under § 60.13(a)(1).
[6] Estimate for queries of section 1921 information by boards that license health care practitioners is included in estimate for practitioner licensure boards under § 60.13(a)(1).

[7] Estimate for queries of section 1921 information by hospitals and other health care entities is included in estimates for queries by hospitals under 60.12(a)(1) and non-hospital health care entities under 60.13(a)(1)(iv).

[8] Estimate for self queries by health care practitioners and health care entities is included in estimate for self queries in the HIPDB in 45 CFR part 61.

[9] Included in estimate for 60.13(a)(1)(vii).

Send comments to Susan Queen, Ph.D., HRSA Reports Clearance Officer, Room 11–05, Parklawn Building, 5600 Fishers Lane, Rockville, Maryland 20852, (301) 443–1129. Written comments should be received within 60 days of this notice.

Dated: January 24, 2002.

James J. Corrigan,

Associate Administrator for Operations and Management.

[FR Doc. 02–2297 Filed 1–30–02; 8:45 am]

BILLING CODE 4165–15–P

DEPARTMENT OF HEALTH AND HUMAN SERVICES

National Institutes of Health

Proposed Collection; Comment Request; Special Volunteer and Guest Researcher Assignment

SUMMARY: In compliance with the requirement of section 3506(c)(2)(A) of the Paperwork Reduction Act of 1995, for opportunity for public comment on proposed data collection projects, the Office of the Director, National Institutes of Health (NIH) will publish periodic summaries of proposed projects to be submitted to the Office of Management and Budget (OMB) for review and approval.

Proposed Collection: *Title:* Special Volunteer and Guest Researcher Assignment. *Type of Information Collection Request:* Extension of OMB No. 0925–0177; 07/31/02. *Need and Use of Information Collection:* Form NIH–590 records, names, address, employer, education, and other information on prospective Special Volunteers and Guest Researchers, and is used by the responsible NIH approving official to determine the individual's qualifications and eligibility for such assignments. The form is the only official record of approved assignments. *Frequency of Response:* On occasion. *Affected Public:* Individuals or households. *Type of Respondents:* Special Volunteer and Guest Researcher candidates. *Estimated Number of Respondents:* 1560. *Estimated Number of Responses Per Respondent:* 1. *Average Burden Hours Per Response:* .08. *Estimated Total Annual Burden Hours Requested:* 125.

There are no Capital Costs, Operating Costs, and/or Maintenance Costs to report.

Type of respondents	Estimated number of respondents	Estimated number of responses per respondent	Average burden hours per response	Estimated total annual burden hours requested
Guest Researcher	370	1	.08	29.6
Special Volunteer	1190	1	.08	95.2
Total	1560	1	.08	124.8

Request for Comments: Written comments and/or suggestions from the public and affected agencies are invited on one or more of the following points: (1) Whether the proposed collection of information will have practical utility; (2) The accuracy of the agency's estimate of the proposed collection of information, including the validity of the methodology and assumptions used; (3) Ways to enhance the quality, utility, and the clarity of information to be collected; and (4) Ways to minimize the burden of the collection of information on those who are to respond, including the use of appropriate automated, electronic, mechanical, or other technological collection techniques or other forms of information technology.

FOR FURTHER INFORMATION CONTACT: To request more information on the proposed project or to obtain a copy of the data collection plans and instruments, contact: Edie Bishop, HR Consultant, Office of Human Resource Management, Senior and Scientific Employment Division, Building 31, Room B3C07, 31 Center Drive MSC 2203, Bethesda, MD 20892.

Comments Due Date: Comments regarding this information collection are best assured of having their full effect if received on or before April 1, 2002.

Dated: January 28, 2002.

Stephen C. Benowitz,

Director, Office of Human Resource Management.

[FR Doc. 02–2400 Filed 1–30–02; 8:45 am]

BILLING CODE 4140–01–M

DEPARTMENT OF HEALTH AND HUMAN SERVICES

National Institutes of Health

Submission for OMB Review: Comment Request; National Institutes of Health Construction Grants

SUMMARY: Under the provisions of section 3507(a)(1)(D) of the Paperwork Reduction Act of 1995, the Office of Extramural Research (OER), Office of Extramural Programs (OEP), the National Institutes of Health (NIH) has submitted to the Office of Management and Budget (OMB) a request for review and approval of a revision of the information collection listed below. This proposed revision was previously published in the **Federal Register** on August 7, 2001 (pages 41251–41252) and allowed 60 days for public comment. No public comments were received. The purpose of this notice is to allow an additional 30 days for public comment. The National Institutes of Health may not conduct or sponsor, and the respondent is not required to respond to, an information collection that has been extended, revised, or implemented on or after October 1, 1995, unless it displays a currently valid OMB control number.

Proposed Collection: Title: National Institutes of Health Construction Grants—42 CFR part 52b (Final Rule). *Type of Information Collection Request:* Revision of No. 0925–0424, expiration date 02/28/2002. *Need and Use of the Information Collection:* This request is

for OMB review and approval of a revision of the information collection and recordkeeping requirements contained in the regulation codified at 42 CFR part 52b. The purpose of the regulation is to govern the awarding and administration of grants awarded by NIH and its components for construction of new buildings and the alteration, renovation, remodeling, improvement, expansion, and repair of existing buildings, including the provision of equipment necessary to make the buildings (or applicable part of the buildings) suitable for the purpose for which it was constructed. The NIH is revising the estimated annual reporting and recordkeeping burden previously approved by OMB is to reflect the increase in the number of construction grants being awarded and administered by NIH. In terms of reporting requirements:

Section 52b.9(b) of the regulation requires the transferor of a facility which is sold or transferred, or owner of a facility, the use of which has changed, to provide written notice of the sale, transfer or change within 30 days. Section 52b.10(f) requires a grantee to submit an approved copy of the construction schedule prior to the start of construction. Section 52b.10(g) requires a grantee to provide daily construction logs and monthly status reports upon request at the job site. Section 52b.11(b) requires applicants for a project involving the acquisition of existing facilities to provide the estimated cost of the project, cost of the acquisition of existing facilities, and cost of remodeling, renovating, or altering facilities to serve the purposes for which they are acquired.

In terms of recordkeeping requirements: Section 52b.10(g) requires grantees to maintain daily construction logs and monthly status reports at the job site. *Frequency of Response:* On occasion. *Affected Public:* Not-for-profit institutions. *Type of respondents:* Grantees. The annual reporting burden is as follows:

ESTIMATED ANNUAL REPORTING AND RECORDKEEPING BURDEN

Applicable section of 42 CFR 52b	Estimated annual number of respondents	Estimated number of responses per respondent	Average burden hours per response	Estimated total annual burden hours
Reporting:				
52b.9(b)	1	1	0.5	0.5
52b.10(f)	(60)	1	1	60
52b.10(g)	(60)	12	1	720
52b.11(b)	100	1	1	100
Recordkeeping:				
52b.10(g)	(60)	260	1	15,600
Total	101			16,481

The annualized cost to the public, based on an average of 60 active grants in the construction phase, is estimated at: $576,835 (or $35 x16,481). There are no Capital Costs to report, and there are no operating or Maintenance Costs to report.

Request for Comments: Written comments and/or suggestions from the public and affected agencies should address one or more of the following points: (1) Evaluate whether the proposed collection of information and recordkeeping are necessary for the proper performance of the function of the agency, including whether the information will have practical utility; (2) Evaluate the accuracy of the agency's estimate of the burden of the proposed collection of information and recordkeeping, including the methodology and assumptions used; (3) Enhance the quality, utility, and clarity of the information to be collected and the recordkeeping information to be maintained; and (4) Minimize the burden of the collection of information on those who are to respond, including the use of appropriate automated, electronic, mechanical, or other technological collection and recordkeeping techniques of other forms of information technology.

Direct Comments to OMB: Written comments and/or suggestions regarding the item(s) contained in this notice, especially regarding the estimated public burden and associated response time, should be directed to the: Office of Management and Budget, Office of Regulatory Affairs, New Executive Office Building, room 10235, Washington, DC 20503, Attention: Desk Officer for NIH.

FOR FURTHER INFORMATION CONTACT: Jerry Moore, NIH Regulations Officer, Office of Management Assessment, Division of Management Support, National Institutes of Health, 6011 Executive Boulevard, Room 601, MSC 7669, Rockville, Maryland 20852; call 301–496–4607 (this is not a toll-free number) or e-mail your request to *jm40z@nih.gov*.

Comments Due Date: Comments regarding this information collection are best assured of having full effect if received on or before March 4, 2002.

Dated: January 28, 2002.

Jerry Moore,

Regulations Officer, National Institutes of Health.

[FR Doc. 02–2401 Filed 1–30–02; 8:45 am]

BILLING CODE 4140–01–P

DEPARTMENT OF HEALTH AND HUMAN SERVICES

National Institutes of Health

Fogarty International Center; Notice of Meeting

Pursuant to section 10(d) of the Federal Advisory Committee Act, as amended (5 U.S.C. Appendix 2), notice is hereby given of a meeting of the Fogarty International Center Advisory Board.

The meeting will be open to the public as indicated below, with attendance limited to space available. Individuals who plan to attend and need special assistance, such as sign language interpretation or other reasonable accommodations, should notify the Contact Person listed below in advance of the meeting.

The meeting will be closed to the public in accordance with the provisions set forth in sections 552b(c)(4) and 552b(c)(6), Title 5 U.S.C., as amended. The grant applications and/or contract proposals and the discussions could disclose confidential trade secrets or commercial property such as patentable material, and personal information concerning individuals associated with the grant

applications and/or contract proposals, the disclosure of which would constitute a clearly unwarranted invasion of personal privacy.

Name of Committee: Fogarty International Center Advisory Board.

Date: February 5, 2002.

Agenda: Report of the Director on updates and an overview of new FIC programs and initiatives. In addition, a discussion of CDC plans, present and future, for international programs and global health concerns.

Place: Lawton Chiles International House, 16 Center Drive (Building 16), Bethesda, MD 20892.

Closed: 1 pm to Adjournment.

Agenda: To review and evaluate grant applications.

Place: Lawton Chiles International House, 16 Center Drive (Building 16), Bethesda, MD 20892.

Contact Person: Irene W. Edwards, Information Officer, Fogarty International Center, National Institutes of Health, Building 31, Room B2C08, 31 Center Drive MSC 2220, Bethesda, MD 20892, 301–496–2075.

This notice is being published less than 15 days prior to the meeting due to the timing limitations imposed by the review and funding cycle.

Information is also available on the Institute's/Center's home page: *www.nih.gov/fic/about/advisory.html,* where an agenda and any additional information for the meeting will be posted when available.

(Catalogue of Federal Domestic Assistance Program Nos. 93.106, Minority International Research Training Grant in the Biomedical and Behavioral Sciences; 93.154, Special International Postdoctoral Research Program in Acquired Immunodeficiency Syndrome; 93.168, International Cooperative Biodiversity Groups Program; 93.934, Fogart International Research Collaboration Award; 93.989, Senior International Fellowship Awards Program, National Institutes of Health, HHS)

Dated: January 25, 2002.

LaVerne Y. Stringfield,

Director, Office of Federal Advisory Committee Policy.

[FR Doc. 02–2393 Filed 1–30–02; 8:45 am]

BILLING CODE 4140–01–M

DEPARTMENT OF HEALTH AND HUMAN SERVICES

National Institutes of Health

National Center for Research Resources; Amended Notice of Meeting

Notice is hereby given of a change in the meeting of the General Clinical Research Centers Review Committee, February 12, 2002, 8 a.m. to February 14, 2002, 6 p.m., Holiday Inn—Chevy Chase, 5520 Wisconsin Avenue, Chevy Chase, MD 20815, which was published in the **Federal Register** on January 3, 2002, 67 FR 336–337.

The meeting has been changed to Feb. 12–13, 2002; the location remains the same. The meeting is partially closed to the public.

Dated: January 25, 2002.

LaVerne Y. Stringfield,

Director, Office of Federal Advisory Committee Policy.

[FR Doc. 02–2383 Filed 1–30–02; 8:45 am]

BILLING CODE 4140–01–M

DEPARTMENT OF HEALTH AND HUMAN SERVICES

National Institutes of Health

National Center for Research Resources; Notice of Closed Meeting

Pursuant to section 10(d) of the Federal Advisory Committee Act, as amended (5 U.S.C. Appendix 2), notice is hereby given of the following meeting.

The meeting will be closed to the public in accordance with the provisions set forth in sections 552b(c)(4) and 552b(c)(6), Title 5 U.S.C., as amended. The grant applications and the discussions could disclose confidential trade secrets or commercial property such as patentable material, and personal information concerning individuals associated with the grant applications, the disclosure of which would constitute a clearly unwarranted invasion of personal privacy.

Name of Committee: National Center for Research Resources Special Emphasis Panel, General Clinical Research Centers.

Date: February 11, 2002.

Time: 9 am to Adjournment.

Agenda: To review and evaluate grant applications.

Place: Office of Review, National Center for Research Resources, 6705 Rockledge Drive, Bethesda, MD 20892, (Telephone Conference Call).

Contact Person: Sheryl K. Brining, PhD, Scientific Review Administrator, Office of Review, National Center for Research Resources, National Institutes of Health, One Rockledge Center, MSC 7965, 6705 Rockledge Drive, Suite 6018, Bethesda, MD 20892–7965, 301–435–0809, *brinings@ncrr.nih.gov*.

This notice is being published less than 15 days prior to the meeting due to the timing limitations imposed by the review and funding cycle.

(Catalogue of Federal Domestic Assistance Program Nos. 93.306, Comparative Medicine, 93.306; 93.333, Clinical Research, 93.333; 93.371, Biomedical Technology; 93.389, Research Infrastructure, National Institutes of Health, HHS)

Dated: January 25, 2002.

LaVerne Y. Stringfield,

Director, Office of Federal Advisory Committee Policy.

[FR Doc. 02–2388 Filed 1–30–02; 8:45 am]

BILLING CODE 4140–01–M

DEPARTMENT OF HEALTH AND HUMAN SERVICES

National Institutes of Health

National Eye Institute; Notice of Closed Meeting

Pursuant to section 10(d) of the Federal Advisory Committee Act, as amended (5 U.S.C. Appendix 2), notice is hereby given of the following meeting.

The meeting will be closed to the public in accordance with the provisions set forth in sections 552b(c)(4) and 552b(c)(6), Title 5 U.S.C., as amended. The grant applications and the discussions could disclose confidential trade secrets or commercial property such as patentable material, and personal information concerning individuals associated with the grant applications, the disclosure of which would constitute a clearly unwarranted invasion of personal privacy.

Name of Committee: National Eye Institute Special Emphasis Panel.

Date: January 30, 2002.

Time: 11 am to 12:30 pm.

Agenda: To review and evaluate grant applications.

Place: 6120 Executive Blvd. Suite 350, Rockville, MD 20892. (Telephone Conference Call)

Contact Person: Samuel Rawlings, PhD, Chief, Scientific Review Branch, Division of Extramural Research, National Eye Institute, Bethesda, MD 20892, 301–496–5561.

This notice is being published less than 15 days prior to the meeting due to the timing limitations imposed by the review and funding cycle.

(Catalogue of Federal Domestic Assistance Program Nos. 93.867, Vision Research, National Institutes of Health, HHS)

Dated: January 25, 2002.

LaVerne Y. Stringfield,

Director, Office of Federal Advisory Committee Policy.

[FR Doc. 02–2391 Filed 1–30–02; 8:45 am]

BILLING CODE 4140–01–M

DEPARTMENT OF HEALTH AND HUMAN SERVICES

National Institutes of Health

National Institute of Mental Health; Notice of Closed Meeting

Pursuant to section 10(d) of the Federal Advisory Committee Act, as amended (5 U.S.C. Appendix 2), notice is hereby given of the following meeting.

The meeting will be closed to the public in accordance with the provisions set forth in sections 552b(c)(4) and 552b(c)(6), Title 5 U.S.C., as amended. The grant applications and the discussions could disclose confidential trade secrets or commercial property such as patentable material, and personal information concerning individuals associated with the grant applications, the disclosure of which would constitute a clearly unwarranted invasion of personal privacy.

Name of Committee: National Institute of Mental Health Special Emphasis Panel.

Date: February 5, 2002.

Time: 1 P.M. to 3 P.M.

Agenda: To review and evaluate grant applications.

Place: Neuroscience Center, National Institutes of Health, 6001 Executive Blvd., Bethesda, MD 20892, (Telephone Conference Call).

Contact Person: Richard E. Weise, PhD, Scientific Review Administrator, Division of Extramural Activities, National Institute of Mental Health, NIH, Neuroscience Center, 6001 Executive Boulevard, Room 6140, MSC9606, Bethesda, MD 20892–9606, 301–443–1225, *rweise@mail.nih.gov.*

This notice is being published less than 15 days prior to the meeting due to the timing limitations imposed by the review and funding cycle.

(Catalogue of Federal Domestic Assistance Program Nos. 93.242, Mental Health Research Grants; 93.281, Scientist Development Award, Scientist Development Award for Clinicians, and Research Scientist Award; 93.282, Mental Health National Research Service Awards for Research Training, National Institutes of Health, HHS)

Dated: January 25, 2002.

LaVerne Y. Stringfield,

Director, Office of Federal Advisory Committee Policy.

[FR Doc. 02–2384 Filed 1–30–02; 8:45 am]

BILLING CODE 4140–01–M

DEPARTMENT OF HEALTH AND HUMAN SERVICES

National Institutes of Health

National Institute on Alcohol Abuse and Alcoholism; Notice of Closed Meeting

Pursuant to section 10(d) of the Federal Advisory Committee Act, as amended (5 U.S.C. Appendix 2), notice is hereby given of the following meeting.

The meeting will be closed to the public in accordance with the provisions set forth in sections 552b(c)(4) and 552b(c)(6), Title 5 U.S.C., as amended. The grant applications and the discussions could disclose confidential trade secrets or commercial property such as patentable material, and personal information concerning individuals associated with the grant applications, the disclosure of which would constitute a clearly unwarranted invasion of personal privacy.

Name of Committee: National Institute on Alcohol Abuse and Alcoholism Special Emphasis Panel.

Date: February 14, 2002.

Time: 4 PM to 5:30 PM.

Agenda: To review and evaluate grant applications.

Place: Bethesda Marriott Hotel, 5151 Pooks Hill Road, Bethesda, MD 20814.

Contact Person: L Tony Beck, PhD, Scientific Review Administrator, National Institute on Alcohol Abuse and Alcoholism, National Institutes of Health, Suite 409, 6000 Executive Blvd., MSC 7003, Bethesda, MD 20892–7003, 301–443–0913, *lbeck@mail.nih.gov.*

(Catalogue of Federal Domestic Assistance Program Nos. 93.271, Alcohol Research Career Development Awards for Scientists and Clinicians; 93.272, Alcohol National Research Service Awards for Research Training; 93.273, Alcohol Research Programs; 93.893, Alcohol Research Center Grants, National Institutes of Health, HHS)

Dated: January 25, 2002.

LaVerne Y. Stringfield,

Director, Office of Federal Advisory Committee Policy.

[FR Doc. 02–2387 Filed 1–30–02; 8:45 am]

BILLING CODE 4140–01–M

DEPARTMENT OF HEALTH AND HUMAN SERVICES

National Institutes of Health

National Institute of Dental and Craniofacial Research; Notice of Closed Meetings

Pursuant to section 10(d) of the Federal Advisory Committee Act, as amended (5 U.S.C. Appendix 2), notice is hereby given of the following meetings.

The meetings will be closed to the public in accordance with the provisions set forth in sections 552b(c)(4) and 552b(c)(6), Title 5 U.S.C., as amended. The grant applications and the discussions could disclose confidential trade secrets or commercial property such as patentable material, and personal information concerning individuals associated with the grant applications, the disclosure of which would constitute a clearly unwarranted invasion of personal privacy.

Name of Committee: National Institute of Dental and Craniofacial Research Special Emphasis Panel, 02–43, Review of R13 Grants.

Date: February 25, 2002.

Time: 12 PM to 2 PM.

Agenda: To review and evaluate grant applications.

Place: 45 Center Drive, Bethesda, MD 20892, (Telephone Conference Call).

Contact Person: H. George Hausch, PhD. Acting Director, 45 Center Drive, Natcher Building, Rm. 4AN44F, National Institutes of Health, Bethesda, MD 20892, (301) 594–2372.

Name of Committee: National Institute of Dental and Craniofacial Research Special Emphasis Panel, 02–58, Review of R44 Grants.

Date: March 4, 2002.

Time: 10 AM to 12:30 PM.

Agenda: To review and evaluate grant applications.

Place: 45 Center Drive, Natcher Building, Conference Room E1/2, Bethesda, MD 20892, (Telephone Conference Call).

Contact Person: Philip Washko, PhD, DMD, Scientific Review Administrator, 45 Center Drive, Natcher Building, Rm. 4AN44F, National Institutes of Health, Bethesda, MD 20892, (301) 594–2372.

Name of Committee: National Institute of Dental and Craniofacial Research Special Emphasis Panel, 02–59, Review of R44 Grants.

Date: March 4, 2002.

Time: 1:30 PM to 3 PM.

Agenda: To review and evaluate grant applications.

Place: 45 Center Drive, Bethesda, MD 20892, (Telephone Conference Call).

Contact Person: Philip Washko, PhD, DMD, Scientific Review Administrator, 45 Center Drive, Natcher Building, Rm. 4AN44F, National Institutes of Health, Bethesda, MD 20892, (301) 594–2372.

(Catalogue of Federal Domestic Assistance Program Nos. 93.121, Oral Diseases and Disorders Research, National Institutes of Health, HHS)

Dated: January 25, 2002.

LaVerne Y. Stringfield,

Director, Office of Federal Advisory Committee Policy.

[FR Doc. 02–2389 Filed 1–30–02; 8:45 am]

BILLING CODE 4140–01–M

DEPARTMENT OF HEALTH AND HUMAN SERVICES

National Institutes of Health

National Institute of Environmental Health Sciences; Notice of Closed Meetings

Pursuant to section 10(d) of the Federal Advisory Committee Act, as amended (5 U.S.C. Appendix 2), notice is hereby given of the following meetings.

The meetings will be closed to the public in accordance with the provisions set forth in sections 552b(c)(4) and 552b(c)(6), Title 5 U.S.C., as amended. The grant applications and/or contract proposals and the discussions could disclose confidential trade secrets or commercial property such as patentable material, and personal information concerning individuals associated with the grant applications and/or contract proposals, the disclosure of which would constitute a clearly unwarranted invasion of personal privacy.

Name of Committee: National Institute of Environmental Health Sciences Special Emphasis Panel, Review of P01 Grant Applications.

Date: February 26, 2002.

Time: 8:30 am to 5 pm.

Agenda: To review and evaluate grant applications.

Place: Hawthorn Suites Hotel, 300 Meredith Drive, Durham, NC 27713.

Contact Person: Ethel B. Jackson, DDS, Chief, Scientific Review Branch, Office of Program Operations, Division of Extramural Research and Training, Nat. Institute of Environmental Health Sciences, P.O. Box 12233, MD EC–30, Research Triangle Park, NC 27709, 919/514–7846, jackson4@niehs.nih.gov.

Name of Committee: National Institute of Environmental Health Sciences Special Emphasis Panel, RFP 01–18–National Center for Toxicogenomics (NCT) Microarray Resource.

Date: March 4, 2002.

Time: 8:30 am to 5 pm.

Agenda: To review and evaluate contract proposals.

Place: Hawthorn Suites Hotel, 300 Meredith Drive, Durham, NC 27713.

Contact Person: RoseAnne M. McGee, BS, Associate Scientific Review Administrator, Scientific Review Branch, Office of Program Operations, Division of Extramural Research and Training, Nat. Inst. of Environmental Health Sciences, Research Triangle Park, NC 27709, 919/541–0752.

(Catalogue of Federal Domestic Assistance Program Nos. 93.113, Biological Response to Environmental Health Hazards; 93.114, Applied Toxicological Research and Testing; 93.115, Biometry and Risk Estimation—Health Risks from Environmental Exposures; 93.142, NIEHS Hazardous Waste Worker Health and Safety Training; 93.143, NIEHS Superfund Hazardous Substances—Basic Research and Education; 93.894, Resources and Manpower Development in the Environmental Health Sciences, National Institutes of Health, HHS)

Dated: January 25, 2002.

LaVerne Y. Stringfield,

Director, Office of Federal Advisory Committee Policy.

[FR Doc. 02–2390 Filed 1–30–02; 8:45 am]

BILLING CODE 4140–01–M

DEPARTMENT OF HEALTH AND HUMAN SERVICES

National Institutes of Health

National Institute of Allergy and Infectious Diseases; Notice of Closed Meeting

Pursuant to section 10(d) of the Federal Advisory Committee Act, as amended (5 U.S.C. Appendix 2), notice is hereby given of the following meeting.

The meeting will be closed to the public in accordance with the provisions set forth in sections 552b(c)(4) and 552b(c)(6), Title 5 U.S.C., as amended. The grant applications and the discussions could disclose confidential trade secrets or commercial property such as patentable material, and personal information concerning individuals associated with the grant applications, the disclosure of which would constitute a clearly unwarranted invasion of personal privacy.

Name of Committee: National Institute of Allergy and Infectious Diseases Special Emphasis Panel.

Date: February 14, 2002.

Time: 12:30 pm to 3:30 pm.

Agenda: To review and evaluate grant applications.

Place: 6700–B Rockledge Drive, Room 2224, Bethesda, MD 20892. (Telephone Conference Call)

Contact Person: Gregory P. Jarosik, PhD, Scientific Review Administrator, Scientific Review Program, Division of Extramural Activities, NIAID, 6700B Rockledge Drive, MSC–7616, Bethesda, MD 20892, 301–496–2550, *gjarosik@niaid,nih.gov.*

(Catalogue of Federal Domestic Assistance Program Nos. 93.855, Allergy, Immunology, and Transplantation Research; 93.856, Microbiology and Infectious Diseases Research, National Institutes of Health, HHS)

Dated: January 25, 2002.

LaVerne Y. Stringfield,

Director, Office of Federal Advisory Committee Policy.

[FR Doc. 02–2392 Filed 1–30–02; 8:45 am]

BILLING CODE 4140–01–M

DEPARTMENT OF HEALTH AND HUMAN SERVICES

National Institutes of Health

National Institute on Drug Abuse; Notice of Closed Meetings

Pursuant to section 10(d) of the Federal Advisory Committee Act, as amended (5 U.S.C. Appendix 2), notice is hereby given of the following meetings.

The meetings will be closed to the public in accordance with the provisions set forth in sections 552b(c)(4) and 552b(c)(6), Title 5 U.S.C., as amended. The grant applications and the discussions could disclose confidential trade secrets or commercial property such as patentable material, and personal information concerning individuals associated with the grant applications, the disclosure of which would constitute a clearly unwarranted invasion of personal privacy.

Name of Committee: National Institute on Drug Abuse Special Emphasis Panel, Medication Development.

Date: February 26, 2002.

Time: 10 am to 10:45 am.

Agenda: To review and evaluate grant applications.

Place: The Westin Grand Hotel, 2350 M Street, NW., Washington, DC 20037.

Contact Person: Mark Swieter, PhD, Health Scientist Administrator, Office of Extramural Affairs, National Institute on Drug Abuse, National Institutes of Health, DHHS, 6001 Executive Boulevard, Room 3158, MSC 9547, Bethesda, MD 20892–9547, (301) 435–1389.

Name of Committee: National Institute on Drug Abuse Special Emphasis Panel, Medication Development.

Date: February 26, 2002.

Time: 10:45 am to 11:30 am.

Agenda: To review and evaluate grant applications.

Place: The Westin Grand Hotel, 2350 M Street, NW., Washington, DC 20037.

Contact Person: Mark Swieter, PhD, Health Scientist Administrator, Office of Extramural Affairs, National Institute on Drug Abuse, National Institutes of Health, DHHS, 6001 Executive Boulevard, Room 3158, MSC 9547, Bethesda, MD 20892–9547, (301) 435–1389.

Name of Committee: National Institute on Drug Abuse Special Emphasis Panel, Treatment Research.

Date: February 26, 2002.

Time: 2 pm to 5 pm.

Agenda: To review and evaluate grant applications.

Place: Swissotel Washington, The Watergate, 2650 Virginia Ave., NW., Washington, DC 20037.

Contact Person: Mark R. Green, PhD, Chief, CEASRB, Office of Extramural Affairs, National Institute on Drug Abuse, National Institutes of Health, DHHS, Suite 3158, 6001 Executive Boulevard, Bethesda, MD 20892–9547, (301) 435–1431.

(Catalogue of Federal Domestic Assistance Program Nos. 93.277, Drug Abuse Scientist Development Award for Clinicians, Scientist Development Awards, and Research Scientist Awards; 93.278, Drug Abuse National Research Service Awards for Research Training; 93.279, Drug Abuse Research Programs, National Institutes of Health, HHS)

Dated: January 25, 2002.

LaVerne Y. Stringfield,

Director, Office of Federal Advisory Committee Policy.

[FR Doc. 02–2394 Filed 1–30–02; 8:45 am]

BILLING CODE 4140–01–M

DEPARTMENT OF HEALTH AND HUMAN SERVICES

National Institutes of Health

National Institute on Drug Abuse; Notice of Closed Meeting

Pursuant to section 10(d) of the Federal Advisory Committee Act, as amended (5 U.S.C. Appendix 2), notice is hereby given of the following meetings.

The meetings will be closed to the public in accordance with the provisions set forth in sections 552b(c)(4) and 552b(c)(6), Title 5 U.S.C., as amended. The contract proposals and the discussions could disclose confidential trade secrets or commercial property such as patentable material, and personal information concerning individuals associated with the contract proposals, the disclosure of which would constitute a clearly unwarranted invasion of personal privacy.

Name of Committee: National Institute on Drug Abuse Special Emphasis Panel, ''Develop Prevention Services Analytic Tools for Improved Substance Abuse Prevention Delivery''.

Date: January 31, 2002.

Time: 9:30 am to 11:30 pm.

Agenda: To review and evaluate contract proposals.

Place: Neuroscience Center, National Institutes of Health, 6001 Executive Blvd., Rockville, MD 20852. (Telephone Conference Call)

Contact Person: Lyle Furr, Contract Review Specialist, Office of Extramural Affairs, National Institute on Drug Abuse, National Institutes of Health, DHHS, 6001 Executive Boulevard, Room 3158, MSC 9547, Bethesda, MD 20892–9547, (301) 435–1439.

This notice is being published less than 15 days prior to the meeting due to the timing limitations imposed by the review and funding cycle.

Name of Committee: National Institute on Drug Abuse Special Emphasis Panel, ''Develop and Maintain Substance Abuse Prevention Methodological Software''.

Date: February 7, 2002.

Time: 9:30 am to 5 pm.

Agenda: To review and evaluate contract proposals.

Place: Bethesda Marriott Hotel, 5151 Pooks Hill Road, Bethesda, MD 20814.

Contact Person: Lyle Furr, Contract Review Specialist, Office of Extramural Affairs, National Institute on Drug Abuse, National Institutes of Health, DHHS, 6001 Executive Boulevard, Room 3158, MSC 9547, Bethesda, MD 20892–9547, (301) 435–1439.

This notice is being published less than 15 days prior to the meeting due to the timing limitations imposed by the review and funding cycle.

(Catalogue of Federal Domestic Assistance Program Nos. 93.277, Drug Abuse Scientist Development Award for Clinicians, Scientist Development Awards, and Research Scientist Awards; 93.278, Drug Abuse National Research Service Awards for Research Training; 93.279, Drug Abuse Research Programs, National Institutes of Health, HHS)

Dated: January 25, 2002.

LaVerne Y. Stringfield,

Director, Office of Federal Advisory Committee Policy.

[FR Doc. 02–2395 Filed 1–30–02; 8:45 am]

BILLING CODE 4140–01–M

DEPARTMENT OF HEALTH AND HUMAN SERVICES

National Institutes of Health

National Institute on Drug Abuse; Notice of Closed Meetings

Pursuant to section 10(d) of the Federal Advisory Committee Act, as amended (5 U.S.C. Appendix 2), notice is hereby given of the following meetings.

The meetings will be closed to the public in accordance with the provisions set forth in sections 552b(c)(4) and 552b(c)(6), Title 5 U.S.C., as amended. The contract proposals and the discussions could disclose confidential trade secrets or commercial property such as patentable material, and personal information concerning individuals associated with the contract proposals, the disclosure of which would constitute a clearly unwarranted invasion of personal privacy.

Name of Committee: National Institute on Drug Abuse Special Emphasis Panel, ''Prevention Training''.

Date: February 13, 2002.

Time: 9:30 am to 11:30 pm.

Agenda: To review and evaluate contract proposals.

Place: Neuroscience Center, National Institutes of Health, 6001 Executive Blvd. Rockville, MD 20852. (Telephone conference Call)

Contact Person: Lyle Furr, Contract Review Specialist, Office of Extramural Affairs, National Institute on Drug Abuse, National Institutes of Health, DHHS, 6001 Executive Boulevard, Room 3158, MSC 9547, Bethesda, MD 20892–9547, (301) 435–1439.

This notice is being published less than 15 days prior to the meeting due to the timing limitations imposed by the review and funding cycle.

Name of Committee: National Institute on Drug Abuse Special Emphasis Panel, ''Virtual Reality for Treatment of Pain''.

Date: February 13, 2002.

Time: 1:30 pm to 3:30 pm.

Agenda: To review and evaluate contract proposals.

Place: Neuroscience Center, National Institutes of Health, 6001 Executive Blvd. Rockville, MD 20852. (Telephone conference Call)

Contact Person: Eric Zatman, Contract Review Specialist, Office of Extramural Affairs, National Institute on Drug Abuse, National Institutes of Health, DHHS, 6001 Executive Boulevard, Room 3158, MSC 9547, Bethesda, MD 20892–9547, (301) 435–1438.

This notice is being published less than 15 days prior to the meeting due to the timing limitations imposed by the review and funding cycle.

Name of Committee: National Institute on Drug Abuse Special Emphasis Panel, ''Administrative and Meeting Support for the Clinical Trials Network''.

Date: March 5–6, 2002.

Time: 9 am to 5 pm.

Agenda: To review and evaluate contract proposals.

Place: Bethesda Marriott Hotel, 5151 Pooks Hill Road, Bethesda, MD 20814.

Contact Person: Eric Zatman, Contract Review Specialist, Office of Extramural Affairs, National Institute on Drug Abuse, National Institutes of Health, DHHS, 6001 Executive Boulevard, Room 3158, MSC 9547, Bethesda, MD 20892–9547, (301) 435–1438.

(Catalogue of Federal Domestic Assistance Program Nos. 93.277, Drug Abuse Scientist Development Award for Clinicians, Scientist Development Awards, and Research Scientist Awards; 93.278, Drug Abuse National Research Service Awards for Research Training; 93.279, Drug Abuse Research Programs, National Institutes of Health, HHS)

Dated: January 25, 2002.

LaVerne Y. Stringfield,

Director, Office of Federal Advisory Committee Policy.

[FR Doc. 02–2396 Filed 1–30–02; 8:45 am]

BILLING CODE 4140–01–M

DEPARTMENT OF HEALTH AND HUMAN SERVICES

National Institutes of Health

National Institute on Deafness and Other Communication Disorders; Notice of Closed Meeting

Pursuant to section 10(d) of the Federal Advisory Committee Act, as amended (5 U.S.C. Appendix 2), notice is hereby given of the following meeting.

The meeting will be closed tot he public in accordance with the provisions set forth in sections 552b(c)(4) and 552b(c)(6), Title 5 U.S.C.,

as amended. The grant applications and the discussions could disclose confidential trade secrets or commercial property such as patentable material, and personal information concerning individuals associated with the grant applications, the disclosure of which would constitute a clearly unwarranted invasion of personal privacy.

Name of Committee: National Institute of Deafness and Other Communications Special Emphasis Panel.

Date: February 28, 2002.

Time: 9 a.m. to 2 p.m.

Agenda: To review and evaluate grant applications.

Place: St. Gregory Hotel & Suites, 2033 M Street, NW., Washington, DC 20036.

Contact Person: Melissa Stick, PhD, MPH, Scientific Review Administrator, Scientific Review Branch, Division of Extramural Research, NIDCD/NIH, 6120 Executive Blvd., Bethesda, MD 20892, 301–496–8683.

(Catalogue of Federal Domestic Assistance Program Nos. 93.173, Biological Research Related to Deafness and Communicative Disorders, National Institutes of Health, HHS)

Dated: January 25, 2002.

LaVerne Y. Stringfield,

Director, Office of Federal Advisory Committee Policy.

[FR Doc. 02–2397 Filed 1–30–02; 8:45 am]

BILLING CODE 4140–01–M

DEPARTMENT OF HEALTH AND HUMAN SERVICES

National Institutes of Health

National Institute of Environmental Health Sciences; Notice of Closed Meeting

Pursuant to section 10(d) of the Federal Advisory Committee Act as amended (5 U.S.C. Appendix 2), notice is hereby given of the following meeting.

The meeting will be closed to the public in accordance with the provisions set forth in sections 552b(c)(4) and 552b(c)(6), Title 5 U.S.C., as amended. The grant applications and the discussions could disclose confidential trade secrets or commercial property such as patentable material, and personal information concerning individuals associated with the grant applications, the disclosure of which would constitute a clearly unwarranted invasion of personal privacy.

Name of Committee: National Institute of Environmental Health Sciences Special Emphasis Panel, Review of Conference Grant (R13) Applications.

Date: February 26, 2002.

Time: 1 pm to 1:30 pm.

Agenda: To review and evaluate grant applications.

Place: NIEHS—East Campus, 79 TW Alexander Drive, Building 4401, Room 3446, Research Triangle Park, NC 27709 (Telephone Conference Call).

Contact Person: RoseAnne M McGee, BS, Associate Scientific Review Administrator, Scientific Review Branch, Office of Program Operations, Division of Extramural Research and Training, Nat. Inst. of Environmental Health Sciences, Research Triangle Park, NC 27709, 919/541–0752.

(Catalogue of Federal Domestic Assistance Program Nos. 93.113, Biological Response to Environmental Health Hazards; 93.114, Applied Toxicological Research and Testing; 93.115, Biometry and Risk Estimation—Health Risks from Environmental Exposures; 93.142, NIEHS Hazardous Waste Worker Health and Safety Training; 93.143, NIEHS Superfund Hazardous Substances—Basic Research and Education; 93.894, Resources and Manpower Development in the Environmental Health Sciences, National Institutes of Health, HHS)

Dated: January 25, 2002.

LaVerne Y. Stringfield,

Director, Office of Federal Advisory Committee Policy.

[FR Doc. 02–2398 Filed 1–30–02; 8:45 am]

BILLING CODE 4140–01–M

DEPARTMENT OF HEALTH AND HUMAN SERVICES

National Institutes of Health

National Library of Medicine; Notice of Closed Meeting

Pursuant to section 10(d) of the Federal Advisory Committee Act, as amended (5 U.S.C. Appendix 2), notice is hereby given of the following meeting.

The meeting will be closed to the public in accordance with the provisions set forth in sections 552b(c)(4) and 552b(c)(6), Title 5 U.S.C., as amended. The contract proposals and the discussions could disclose confidential trade secrets or commercial property such as patentable material, and personal information concerning individuals associated with the contract proposals, the disclosure of which would constitute a clearly unwarranted invasion of personal privacy.

Name of Committee: National Library of Medicine Special Emphasis Panel.

Date: February 27, 2002.

Time: 10:30 am to 11:30 am.

Agenda: To review and evaluate contract proposals.

Place: National Library of Medicine, Building 38A, HPCC Conference Room B1N30Q, 8600 Rockville Pike, Bethesda, MD 20894. (Telephone Conference Call)

Contact Person: Susan Sparks, PhD, Senior Education Specialist, National Library of Medicine, Extramural Programs, Rockledge One, 6705 Rockledge Drive, Suite 301, Bethesda, MD 20892.

(Catalogue of Federal Domestic Assistance Program Nos. 93.879, Medical Library Assistance, National Institutes of Health, HHS)

Dated: January 25, 2002.

LaVerne Y. Stringfield,

Director, Office of Federal Advisory Committee Policy.

[FR Doc. 02–2399 Filed 1–30–02; 8:45 am]

BILLING CODE 4140–01–M

DEPARTMENT OF HEALTH AND HUMAN SERVICES

National Institutes of Health

Center for Scientific Review; Notice of Closed Meetings

Pursuant to section 10(d) of the Federal Advisory Committee Act, as amended (5 U.S.C. Appendix 2), notice is hereby given of the following meetings.

The meetings will be closed to the public in accordance with the provisions set forth in sections 552b(c)(4) and 552b(c)(6), Title 5 U.S.C., as amended. The grant applications and the discussions could disclose confidential trade secrets or commercial property such as patentable material, and personal information concerning individuals associated with the grant applications, the disclosure of which would constitute a clearly unwarranted invasion of personal privacy.

Name of Committee: Center for Scientific Review Special Emphasis Panel.

Date: February 7–8, 2002.

Time: 8:30 AM to 3 PM.

Agenda: To review and evaluate grant applications.

Place: Georgetown Suites, 1000 29th St., NW, Washington, DC 20007.

Contact Person: Marcia Steinberg, PhD, Scientific Review Administrator, Center for Scientific Review, National Institutes of Health, 6701 Rockledge Drive, Room 5140, MSC 7840, Bethesda, MD 20892, (301) 435–1023, *steinberm@csr.nih.gov.*

This notice is being published less than 15 days prior to the meeting due to the timing limitations imposed by the review and funding cycle.

Name of Committee: Endocrinology and Reproductive Sciences Integrated Review Group, Reproduction Biology Study Section.

Date: February 11–12, 2002.

Time: 8 AM to 3 PM.

Agenda: To review and evaluate grant applications.

Place: The Hyatt Regency Hotel, One Bethesda Metro Center, Bethesda, MD 20814.

Contact Person: Dennis Leszczynski, PhD, Scientific Review Administrator, Center for Scientific Review, National Institutes of Health, 6701 Rockledge Drive, Room 6170, MSC 7892, Bethesda, MD 20892, (301) 435–1044.

Name of Committee: Endocrinology and Reproductive Sciences Integrated Review

Group, Biochemical Endocrinology Study Section.

Date: February 11–12, 2002.

Time: 8 AM to 5 PM.

Agenda: To review and evaluate grant applications.

Place: Embassy Suites Hotel, The Chevy Chase Pavilion, 4300 Military Road NW, Wisconsin at Western Avenue, Washington, DC 20015.

Contact Person: Michael Knecht, PhD, Scientific Review Administrator, Center for Scientific Review, National Institutes of Health, 6701 Rockledge Drive, Room 6176, MSC 7892, Bethesda, MD 20892, (301) 435–1046.

Name of Committee: Endocrinology and Reproductive Sciences Integrated Review Group, Reproductive Endocrinology Study Section.

Date: February 11–12, 2002.

Time: 8 AM to 3 PM.

Agenda: To review and evaluate grant applications.

Place: Courtyard By Marriott, 805 Russell Avenue, Gaithersburg, MD 20879.

Contact Person: Abubakar A. Shaikh, DVM, PHD, Scientific Review Administrator, Center for Scientific Review, National Institutes of Health, 6701 Rockledge Drive, Room 6166, MSC 7892, Bethesda, MD 20892, (301) 435–1042.

Name of Committee: Nutritional and Metabolic Sciences Integrated Review Group, Nutrition Study Section.

Date: February 11–12, 2002.

Time: 8:30 AM to 4 PM.

Agenda: To review and evaluate grant applications.

Place: Hyatt Regency Hotel, One Bethesda Metro Center, Bethesda, MD 20814.

Contact Person: Sooja K. Kim, PHD, RD, Scientific Review Administrator, Center for Scientific Review, National Institutes of Health, 6701 Rockledge Drive, Room 6178, MSC 7892, Bethesda, MD 20892, (301) 435–1780.

Name of Committee: Oncological Sciences Integrated Review Group, Experimental Therapeutics Subcommittee 2.

Date: February 11–13, 2002.

Time: 8:30 AM to 5 PM.

Agenda: To review and evaluate grant applications.

Place: Embassy Suites Hotel, The Chevy Chase Pavilion, 4300 Military Road NW., Wisconsin at Western Avenue, Washington, DC 20015.

Contact Person: Marcia Litwack, PHD, Scientific Review Administrator, Center for Scientific Review, National Institutes of Health, 6701 Rockledge Drive, Room 4150, MSC 7804, Bethesda, MD 20892, (301) 435–1719.

Name of Committee: Biobehavioral and Behavioral Process Initial Review Group, Biobehavioral and Behavioral Processes 2.

Date: February 11–12, 2002.

Time: 9 AM to 5 PM.

Agenda: To review and evaluate grant applications.

Place: The Melrose Hotel, 2430 Pennsylvania Ave., NW., Washington, DC 20037.

Contact Person: Thomas A. Tatham, PHD, Scientific Review Administrator, Center for Scientific Review, National Institutes of Health, 6701 Rockledge Drive, Room 3188, MSC 7848, Bethesda, MD 20892, (301) 435–0692. *tathamt@csr.nih.gov.*

Name of Committee: Center for Scientific Review Special Emphasis Panel.

Date: February 11, 2002.

Time: 9 AM to 5 PM.

Agenda: To review and evaluate grant applications.

Place: Hyatt Regency Bethesda, One Bethesda Metro Center, Bethesda, MD 20814.

Contact Person: Richard Marcus, PHD, Scientific Review Administrator, Center for Scientific Review, National Institutes of Health, 6701 Rockledge Drive, Room 5168, MSC 7844, Bethesda, MD 20892, (301) 435–1245, *richard.marcus@nih.gov.*

Name of Committee: Immunological Sciences Integrated Review Group, Immunobiology Study Section.

Date: February 12–13, 2002.

Time: 8:30 AM to 3 PM.

Agenda: To review and evaluate grant applications.

Place: Holiday Inn, 5520 Wisconsin Avenue, Chevy Chase, MD 20815.

Contact Person: Betty Hayden, PHD, Scientific Review Administrator, Center for Scientific Review, National Institutes of Health, 6701 Rockledge Drive, Room 4206, MSC 7812, Bethesda, MD 20892, (301) 435–1223.

Name of Committee: Integrative, Functional and Cognitive Neuroscience Integrated Review Group, Visual Sciences B Study Section.

Date: February 12–13, 2002.

Time: 8:30 AM to 4 PM.

Agenda: To review and evaluate grant applications.

Place: Georgetown Holiday Inn, 2101 Wisconsin Avenue, NW, Washington, DC 20007.

Contact Person: Christine Melchior, PHD, Scientific Review Administrator, Center for Scientific Review, National Institutes of Health, 6701 Rockledge Drive, Room 5176 MSC 7844, Bethesda, MD 20892, (301) 435–1713, *melchioc@csr.nih.gov.*

Name of Committee: Center for Scientific Review Special Emphasis Panel.

Date: February 12, 2002.

Time: 9 AM to 5 PM.

Agenda: To review and evaluate grant applications.

Place: Embassy Suites Hotel, The Chevy Chase Pavilion, 4300 Military Road NW, Wisconsin at Western Avenue, Washington, DC 20015.

Contact Person: Weijia Ni, PHD, Scientific Review Administrator, Center for Scientific Review, National Institutes of Health, 6701 Rockledge Drive, Room 3190 MSC 7848, Bethesda, MD 20892, (301) 435–1507, *niw@csr.nih.gov.*

Name of Committee: Social Sciences, Nursing, Epidemiology and Methods Integrated Review Group, Epidemiology and Disease Control Subcommittee 1.

Date: February 14–15, 2002.

Time: 8 AM to 5 PM.

Agenda: To review and evaluate grant applications.

Place: Holiday Inn, 8120 Wisconsin Avenue, Bethesda, MD 20814.

Contact Person: J. Scott Osborne, PhD, MPH, Scientific Review Administrator, Center for Scientific Review, National Institutes of Health, 6701 Rockledge Drive, Room 4114 MSC 7816, Bethesda, MD 20892, (301) 435–1782.

Name of Committee: Cardiovascular Sciences Integrated Review Group, Hematology Subcommittee 1.

Date: February 14–15, 2002.

Time: 8 AM to 5 PM.

Agenda: To review and evaluate grant applications.

Place: Bethesda Holiday Inn, Versailles Ill, 8120 Wisconsin Avenue, Bethesda, MD 20814.

Contact Person: Robert Su, PhD, Scientific Review Administrator, Center for Scientific Review, National Institutes of Health, 6701 Rockledge Drive, Room 4134 MSC 7802, Bethesda, MD 20892, (301) 435–1195.

Name of Committee: Endocrinology and Reproductive Sciences Integrated Review Group, Endocrinology Study Section.

Date: February 14–15, 2002.

Time: 8 AM to 5 PM.

Agenda: To review and evaluate grant applications.

Place: Holiday Inn, 8120 Wisconsin Avenue, Bethesda, MD 20814.

Contact Person: Syed M. Amir, PhD, Scientific Review Administrator, Center for Scientific Review, National Institutes of Health, 6701 Rockledge Drive, Room 6168, MSC 7892, Bethesda, MD 20892, (301) 435–1043, *amirs@csr.nih.gov.*

Name of Committee: Center for Scientific Review Special Emphasis Panel.

Date: February 14–15, 2002.

Time: 8 AM to 5 PM.

Agenda: To review and evaluate grant applications.

Place: Embassy Suites, Chevy Chase Pavilion, 4300 Military Rd., Wisconsin at Western Ave., Washington, DC 20015.

Contact Person: Anne E Schaffner, PHD, Scientific Review Administrator, Center for Scientific Review, National Institutes of Health, 6701 Rockledge Drive, Room 5214, MSC 7850, Bethesda, MD 20892, (301) 435–1239, *schaffna@csr.nih.gov.*

Name of Committee: Center for Scientific Review Special Emphasis Panel.

Date: February 14–15, 2002.

Time: 8:30 AM to 6 PM.

Agenda: To review and evaluate grant applications.

Place: Savoy Suites Georgetown, 2505 Wisconsin Avenue, NW., Washington, DC 20007.

Contact Person: Lee S. Mann, PHD, JD, Scientific Review Administrator, Center for Scientific Review, National Institutes of Health, 6701 Rockledge Drive, Room 3186, MSC 7848, Bethesda, MD 20892, (301) 435–0677.

Name of Committee: Oncological Sciences Intergrated Review Group, Experimental Therapeutics Subcommittee 1.

Date: February 14–15, 2002.

Time: 8:30 AM to 5 PM.

Agenda: To review and evaluate grant applications.

Place: Arlington Hyatt, 1325 Wilson Boulevard, Arlington, VA 22209.

Contact Person: Philip Perkins, PHD, Scientific Review Administrator, Center for Scientific Review, National Institutes of Health, 6701 Rockledge Drive, Room 4148, MSC 7804, Bethesda, MD 20892, (301) 435–1718, *perkins@csr.nih.gov.*

Name of Committee: Genetic Sciences Integrated Review Group, Mammalian Genetics Study Section.

Date: February 14–15, 2002.

Time: 8:30 AM to 2:30 PM.

Agenda: To review and evaluate grant applications.

Place: Marriott Key Bridge, 1401 Lee Highway, Arlington, VA 22209.

Contact Person: Camilla Day, PHD, Scientific Review Administrator, Center for Scientific Review, National Institutes of Health, 6701 Rockledge Drive, Room 2208, MSC 7890, Bethesda, MD 20892, (301) 435–1037, *dayc@csr.nih.gov.*

Name of Committee: Biochemical Sciences Integrated Review Group, Medical Biochemistry Study Section.

Date: February 14–15, 2002.

Time: 8:30 AM to 3 PM.

Agenda: To review and evaluate grant applications.

Place: Governor's House, 1615 Rhode Island Avenue, NW., Washington, DC 20036.

Contact Person: Alexander S. Liacouras, PHD, Scientific Review Administrator, Center for Scientific Review, National Institutes of Health, 6701 Rockledge Drive, Room 5154, MSC 7842, Bethesda, MD 20892, (301) 435–1740.

Name of Committee: Immunological Sciences Integrated Review Group, Experimental Immunology Study Section.

Date: February 14–15, 2002.

Time: 8:30 AM to 4 PM.

Agenda: To review and evaluate grant applications.

Place: Holiday Inn—Chevy Chase, 5520 Wisconsin Avenue, Chevy Chase, MD 20815.

Contact Person: Cathleen L. Cooper, PHD, Scientific Review Administrator, Center for Scientific Review, National Institutes of Health, 6701 Rockledge Drive, Room 4208, MSC 7812, Bethesda, MD 30892, (301) 435–3566, *cooperc@csr.nih.gov.*

Name of Committee: Integrative, Function and Cognitive Neuroscience Integrated Review Group, Integrative, Functional and Cognitive Neuroscience 7.

Date: February 14–15, 2002.

Time: 8:30 AM to 5 PM.

Agenda: To review and evaluate grants applications.

Place: George Washington University Inn, 824 New Hampshire Ave., NW., Washington, DC 20037.

Contact Person: Bernard F. Driscoll, PHD, Scientific Review Administrator, Center for Scientific Review, National Institutes of Health, 6701 Rockledge Drive, Room 5158, MSC 7844, Bethesda, MD 20892, (301) 435–1242.

Name of Committee: Genetic Sciences Integrated Review Group, Genetics Study Section.

Date: February 14–16, 2002.

Time: 9 AM to 4 PM.

Agenda: To review and evaluate grants applications.

Place: The River Inn, 924 Twenty-Fifth Street, NW., Washington, DC 20037.

Contact Person: David J. Remondini, PHD, Scientific Review Administrator, Center for Scientific Review, National Institutes of Health, 6701 Rockledge Drive, Room 6154, MSC 7890, Bethesda, MD 20892, (301) 435–1038, *remondid@csr.nih.gov.*

Name of Committee: Center for scientific Review Special Emphasis Panel.

Date: February 15, 2002.

Time: 8:30 AM to 12:30 PM.

Agenda: To review and evaluate grants applications.

Place: Monarch Hotel, 2400 M Street, NW., Washington, DC 20037.

Contact Person: Randolph Addison, PHD, Scientific Review Administrator, Center for Scientific Review, National Institutes of Health, 6701 Rockledge Drive, Room 5144, MSC 7840, Bethesda, MD 20892, (301) 435–1025, *addisonr@csr.nih.gov.*

Name of Committee: Center for Scientific Review Special Emphasis Panel.

Date: February 15, 2002.

Time: 1:30 PM to 5:30 PM.

Agenda: To review and evaluate grants applications.

Place: Monarch Hotel, 2400 M Street, NW., Washington, DC 20037.

Contact Person: Randolph Addison, PHD, Scientific Review Administrator, Center for Scientific Review, National Institutes of Health, 6701 Rockledge Drive, Room 5144, MSC 7840, Bethesda, MD 20892, (301) 435–1025, *addisonr@csr.nih.gov.*

(Catalogue of Federal Domestic Assistance Program Nos. 93.306, Comparative Medicine, 93.306; 93.333, Clinical Research, 93.333, 93.337, 93.393–93.396, 93.837–93.844, 93.846–93.878, 93.892–93.893, National Institutes of Health, HHS)

Dated: January 25, 2002.

LaVerne Y. Stringfield,

Director, Office of Federal Advisory Committee Policy.

[FR Doc. 02–2385 Filed 1–30–02; 8:45 am]

BILLING CODE 4140–01–M

DEPARTMENT OF HEALTH AND HUMAN SERVICES

National Institutes of Health

Center for Scientific Review; Cancellation of Meeting

Notice is hereby given of the cancellation of the Cell Development and Function 4, February 7, 2002, 8:30 AM to February 8, 2002, 12:00 PM, Georgetown Suites, 1000 29th Street, NW., Washington, DC, 20007 which was published in the **Federal Register** on January 23, 2002, 67 FR 3221–3223.

The meeting is cancelled due to a quorum problem.

Dated: January 25, 2002.

LaVerne Y. Stringfield,

Director, Office of Federal Advisory Committee Policy.

[FR Doc. 02–2386 Filed 1–31–02; 8:45 am]

BILLING CODE 4140–01–M

DEPARTMENT OF THE INTERIOR

Office of the Secretary

Bureau of Indian Affairs

Office of Special Trustee for American Indians

Office of Indian Trust Transition

Tribal Consultation on Indian Trust Asset Management

AGENCIES: Office of the Secretary, Bureau of Indian Affairs, Office of the Special Trustee for American Indians, Office of Indian Trust Transition, Interior.

ACTION: Notice of tribal consultation meeting.

SUMMARY: The Office of the Secretary, along with the Bureau of Indian Affairs, the Office of Special Trustee for American Indians, and the Office of Indian Trust Transition, will conduct an additional meeting to discuss a proposed reorganization of the Department's trust responsibility functions to improve the management of Indian trust assets. Any tribe, band, nation or individual is encouraged to attend this meeting and to submit written comments. This meeting is in addition to those identified in a prior **Federal Register** notice of December 11, 2001 (66 FR 64054).

DATES: The date and city location of the consultation meeting is as follows:

- February 14, 2002—Portland, Oregon.

ADDRESSES: The address for the consultation meeting, which will begin promptly at 9 a.m., is as follows:

- Sheraton Hotel, 8235 NE Airport Way, Portland, Oregon 97220.

FOR FURTHER INFORMATION CONTACT: Wayne R. Smith, Deputy Assistant Secretary—Indian Affairs, 1849 C Street, NW., MS 4140 MIB, Washington, DC 20240 (202/208–7163).

SUPPLEMENTARY INFORMATION: The purpose of this meeting is to involve affected and interested parties in the process of organizing the Department's trust asset management responsibility functions. The Department has determined that there is a need for dramatic change in the management of

Indian trust assets. This need has been made apparent in several ways. An independent consultant has analyzed important components of the Department's trust reform activities and made several recommendations, including the recommendation that the Department consolidate trust functions under a single entity. Concerns have also been raised in the *Cobell* v. *Norton* case, which is currently pending in the Federal District Court for the District of Columbia. Internal review has also supported reorganization. Additionally, a recent report commissioned by the Department of the Interior has supported reorganization. A new office in the Department, the Office of Indian Trust Transition, has been created to plan and support reorganization. While preliminary actions have been taken by the Department, the plan for reorganization is still in the early stages of development.

Written comments may be submitted at the meeting location or may be mailed to the address indicated under the heading **FOR FURTHER INFORMATION CONTACT.** Interested persons may examine written comments during regular business hours (7:45 a.m. to 4:15 p.m. EST) as arranged by the Assistant Secretary—Indian Affairs, Washington, DC, Monday through Friday, except for Federal holidays. Commenters who wish to remain anonymous must clearly state this preference at the beginning of their written comments. The Department will honor requests for anonymity to the extent allowable by law.

This meeting supports administrative policy on tribal consultation by encouraging maximum direct participation of representatives of tribal governments, tribal organizations and other interested persons in important Departmental processes.

Dated: January 25, 2002.

J. Steven Griles,

Deputy Secretary.

[FR Doc. 02–2303 Filed 1–30–02; 8:45 am]

BILLING CODE 4310–02–M

DEPARTMENT OF THE INTERIOR

Minerals Management Service

Agency Information Collection Activities: Submitted for Office of Management and Budget (OMB) Review; Comment Request

AGENCY: Minerals Management Service (MMS), Interior.

ACTION: Notice of a revision of a currently approved information collection (OMB Control Number 1010–0095).

SUMMARY: To comply with the Paperwork Reduction Act (PRA) of 1995, we are submitting to OMB for review and approval an information collection request (ICR) titled ''Request to Exceed Regulatory Allowance Limitation.'' We are also soliciting comments from the public on this ICR.

DATES: Submit written comments on or before March 4, 2002.

ADDRESSES: Submit written comments to the Office of Information and Regulatory Affairs, OMB, Attention: Desk Officer for the Department of the Interior (OMB Control Number 1010–0095), 725 17th Street, NW, Washington, DC 20503. Also, submit copies of your written comments to Carol Shelby, Regulatory Specialist, Minerals Management Service, MS 320B2, P.O. Box 25165, Denver, Colorado 80225. If you use an overnight courier service, MMS's courier address is Building 85, Room A–614, Denver Federal Center, Denver, Colorado 80225.

FOR FURTHER INFORMATION CONTACT: Carol Shelby, Regulatory Specialist, phone (303) 231–3151 or FAX (303) 231–3385.

SUPPLEMENTARY INFORMATION:

Title: Request to Exceed Regulatory Allowance Limitation.

OMB Control Number: 1010–0095.

Bureau Form Number: Form MMS–4393.

Abstract: The Department of the Interior (DOI) is responsible for matters relevant to mineral resource development on Federal and Indian lands and the Outer Continental Shelf (OCS). The Secretary of the Interior (Secretary) is responsible for managing the production of minerals from Federal and Indian lands and the OCS, collecting royalties from lessees who produce minerals, and distributing the funds collected in accordance with applicable laws. The Secretary also has an Indian trust responsibility to manage Indian lands and seek advice and information from Indian beneficiaries. MMS performs the royalty management functions for the Secretary.

Under certain circumstances, lessees are authorized to deduct from royalty payments the reasonable actual costs of transporting the royalty portion of produced oil and gas from the lease to a processing or sales point not in the immediate lease area. When gas is processed for the recovery of gas plant products, lessees may claim a processing allowance. Transportation and processing allowances are a part of the product valuation process that MMS uses to determine if the lessee is reporting and paying the proper royalty amount.

Regulations at 30 CFR 206.54(b)(1), 206.109(c)(1), 206.156(c)(1), and 206.177(c)(1) establish the limit on transportation allowance deductions for oil and gas at 50 percent of the value of the oil or gas at the point of sale. Regulations at 30 CFR 206.54(b)(2), 206.109(c)(2), 206.156(c)(3), and 206.177(c)(2)–(3) provide that MMS may approve a transportation allowance in excess of 50 percent upon proper application from the royalty payor.

Similar regulations at 30 CFR 206.158(c)(2) establish 66⅔ percent of the value of each gas plant product as the limit on the allowable gas processing deduction. Regulations at 30 CFR 206.158(c)(3) provide for the approval of a gas processing allowance in excess of 66⅔ percent when properly requested by a Federal gas royalty payor. Effective January 2000, Indian gas regulations do not contain any provisions to exceed the 66⅔ percent processing allowance limit.

To request permission to exceed an allowance limit, royalty payors must write a letter to MMS providing the reasons why a higher allowance limit is necessary. MMS developed Form MMS–4393 to be included with the payor's request because in previous unstructured requests some necessary information was frequently omitted.

MMS is seeking approval to revise Form MMS–4393. These revisions are necessary to make Form MMS–4393 compatible with other recently revised forms such as the Form MMS–2014, Report of Sales and Royalty Remittance (OMB control number 1010–0140). These revisions are the result of a major reengineering of MMS's financial and compliance processes and the procurement of a new computer system. For example, during the reengineering process, MMS decided to eliminate the reporting of an accounting identification (AID) number and selling arrangement number on all existing forms. In their place, MMS is requiring a combination of lease and agreement numbers and sales type codes. Since the existing Form MMS–4393 contains columns for AID and selling arrangement numbers, these columns must be removed and new columns for lease and agreement numbers must be added. The revised form requires similar types of information to be provided by the payor so we do not anticipate any changes in burden hours. The revised form will become effective and replace the existing form when our new financial and compliance system is fully operational.

Responses to this information collection are required to obtain or retain a benefit. Proprietary information is requested and protected, and there are no questions of a sensitive nature involved in this collection of information.

Frequency: Annually.

Estimated Number and Description of Respondents: 75 royalty payors.

Estimated Annual Reporting and Recordkeeping ''Hour'' Burden:

37 hours. See the following chart for a breakdown of the burden estimate by CFR section and paragraph.

30 CFR section	Reporting requirement	Burden hours per response	Annual number of responses	Annual burden hours
206.54(b)(2), 206.109(c)(2), 206.156(c)(3), 206.158(c)(3), 206.177(c)(3).	An application for exception (using Form MMS–4393 . . .) shall contain all relevant and supporting documentation necessary for MMS to make a determination.	.5	75	37

Estimated Annual Reporting and Recordkeeping ''Non-hour'' Burden: We have identified no ''non-hour cost'' burden.

Comments: Section 3506(c)(2)(A) of the PRA (44 U.S.C. 3501, *et seq.*) requires each agency ''* * * to provide notice * * * and otherwise consult with members of the public and affected agencies concerning each proposed collection of information * * *.'' Agencies must specifically solicit comments to (a) evaluate whether the proposed collection of information is necessary for the agency to perform its duties, including whether the information is useful; (b) evaluate the accuracy of the agency's estimate of the burden of the proposed collection of information; (c) enhance the quality, usefulness, and clarity of the information to be collected; and (d) minimize the burden on the respondents, including the use of automated collection techniques or other forms of information technology.

To comply with the public consultation process, on August 15, 2001, we published a **Federal Register** notice (66 FR 42875) with the required 60-day comment period announcing that we would submit this ICR to OMB for approval. We received comments from one company. We responded to the comments in our ICR submission for OMB approval. We will provide a copy of the ICR to you without charge upon request.

If you wish to comment in response to this notice, please send your comments directly to the offices listed under the **ADDRESSES** section of this notice. OMB has up to 60 days to approve or disapprove the information collection but may respond after 30 days. Therefore, to ensure maximum consideration, OMB should receive your comments by March 4, 2002. The PRA provides that an agency may not conduct or sponsor, and a person is not required to respond to, a collection of information unless it displays a currently valid OMB control number.

Public Comment Policy: We will make copies of these comments, including names and home addresses of respondents, available for public review during regular business hours at our offices in Lakewood, Colorado.

Individual respondents may request that we withhold their home address from the record, which we will honor to the extent allowable by law. There may be circumstances in which we would withhold from the record a respondent's identity, as allowable by the law. If you wish us to withhold your name and/or address, you must state this prominently at the beginning of your comments. However, we will not consider anonymous comments. We will make all submissions from organizations or businesses, and from individuals identifying themselves as representatives or officials of organizations or businesses, available for public inspection in their entirety.

MMS Information Collection Clearance Officer: Jo Ann Lauterbach, telephone (202) 208–7744

Dated: January 15, 2002.

Milton K. Dial,

Acting Associate Director for Minerals Revenue Management.

[FR Doc. 02–2270 Filed 1–30–02; 8:45 am]

BILLING CODE 4310–MR–P

DEPARTMENT OF THE INTERIOR

National Park Service

Record of Decision/Statement of Findings: Issuance of Permits, Which Would Allow for Safety Improvements at the Provincetown Municipal Airport, Provincetown, MA

ACTION: Notice of approval of Record of Decision.

SUMMARY: Pursuant to subsection 102(2) of the National Environmental Policy Act of 1969, and the regulations promulgated by the Council on Environmental Quality (40 CFR 1505.2), the National Park Service, U.S. Department of the Interior has prepared a Record of Decision and Statement of Findings for Executive Orders 11988 (''Floodplain Management'') and 11990 (''Protection of Wetlands'').

DATES: The Record of Decision was recommended by the Superintendent of Cape Cod National Seashore, and approved by the Director of the Northeast Region on November 28, 2001. The Statement of Findings was also recommended by the Superintendent of Cape Cod National Seashore, certified for technical adequacy and servicewide consistency by both the Chief of the Water Resources Division and the Northeast Region Compliance Officer and approved by the Director of the Northeast Region on November 28, 2001.

ADDRESSES: Inquires regarding the Record of Decision or the Statement of Findings should be submitted to the Superintendent, Cape Cod National Seashore, 99 Marconi Site Road, Wellfleet, Massachusetts 02667. Telephone (508) 349–3785 or e-mail to *CACO_Superintendent@NPS.Gov.*

SUPPLEMENTARY INFORMATION: The summary of the Record of Decision/Statement of Findings follows:

The Department of the Interior, National Park Service (NPS) has prepared this Record of Decision (ROD)/Statement of Findings (SOF) concerning the issuance of special use permits, which would allow for safety improvements at the Provincetown Municipal Airport, Provincetown, Massachusetts. This ROD/SOF responds to and references the Final Environmental Impact Statement (FEIS), of April 7, 2000, for the Provincetown Municipal Airport, Provincetown, Massachusetts, and Department of Transportation Section 4(F) Statement as prepared by the Federal Aviation Administration (FAA). This ROD provides a statement of the decision made; a summary description of the alternatives analyzed by FAA in their

FEIS; the decision rationale; identification of the environmentally preferable alternative; a description of mitigation measures; and a discussion of impairment.

The U.S. Department of the Interior owns the land under the airport. Two twenty-year Special Use Permits have been issued and/or updated to the Town of Provincetown, as of 6/01/98 and 6/19/98, to operate a municipal airport within a prescribed permit area boundary indicated in the NPS permit(s) for aviation operations. One covers the runway area and operational facilities and the other relates to navigational lighting and instrumentation facilities. Section 4(f) of the Department of Transportation Act of 1966 (recodified at 49 U.S.C. 303) requires ''that the Secretary shall not approve any program or project which requires the use of any public park, recreation area, or wildlife and waterfowl refuge of national, state, or local significance as determined by the officials having jurisdiction thereof unless there is no feasible and prudent alternative to the use of such land and such program or project includes all possible planning to minimize harm resulting from the use.'' The pending issuance of permits covered by this ROD for safety improvements necessitated an impact analysis of 4(f) land, as parkland beyond that currently permitted for the various airport purposes was requested by FAA. A Statement of Findings on wetland protection was also prepared to address wetland and floodplain impacts.

The FEIS for the Provincetown Municipal Airport was prepared by the FAA to cover their actions related to implementing the airport Master Plan. The NPS cooperated in the development of the FEIS by providing technical input and review/commentary on impact analysis. The Airport Master Plan is basic to FAA's procedures to develop an Airport Layout Plan that guides physical airport development and improvement such as alterations to runway safety areas, the apron area, and replacement of an approach light system.

A runway extension was evaluated in the FEIS on the basis of current development interests and currently feasible alternative considerations; however, funding for the project is not being approved at this time and further evaluation of this action will be pursued according to conditions outlined in a General Agreement prepared by the FAA and NPS, the essential text of which is presented in the FEIS. The inclusion of the runway extension in the FEIS and the Airport Layout Plan was for planning consideration only. Basically, the agreement between NPS and FAA states that when the FAA detects a need to further consider runway extension, the FAA will fully document the need and initiate re-evaluation of the several factors that affect the Federal decision making process for identifying and selecting the runway extension alternatives and the adequacy of the FAA ROD, by way of an Environmental Assessment (EA). Section 4(f) and Executive Order 11990 compliance for runway extension will be duly accomplished at that time. NPS decision-making on the runway extension is also deferred to that time.

Decision (Selected Action)

The National Park Service will adjust the parkland area permitted for airport use based only on the proposed actions related to the Runway Safety Area, parking aprons, and lighting system as described for safety improvements in the FEIS for the Provincetown Municipal Airport issued in April 2000 and the FAA's ROD, signed November 21, 2000. This will involve exchange and re-designation of the airport land use footprint, by returning two acres of previously permitted land, back to parkland use, and permitting 0.96 acres (incorrectly described in the FAA FEIS and FAA ROD as 0.69 acres) of parklands needed to serve navigational localizer relocation and its associated critical area use. The two acres of previously permitted parklands are being relinquished by FAA to revert to parkland uses, in compensation for the new acreage provided for the localizer. These two acres are located in a surficially undisturbed dune area which possess greater ecological value than the portion of land being exchanged, located between the eastern end of the runway and Race Point Road.

Dated: November 28, 2001.

Marie Rust,

Northeast Regional Director, National Park Service.

[FR Doc. 02–2286 Filed 1–30–02; 8:45 am]

BILLING CODE 4310–76–P

DEPARTMENT OF THE INTERIOR

National Park Service

Notice of Intent; Fire Management Plan, Environmental Impact Statement, Chiricahua National Monument, Arizona

AGENCY: National Park Service, Department of the Interior.

ACTION: Notice of intent to prepare an environmental impact statement for the Fire Management Plan for Chiricahua National Monument.

SUMMARY: Under the provisions of the National Environmental Policy Act of 1969, the National Park Service is preparing an environmental impact statement for the Fire Management Plan for Chiricahua National Monument. This effort will result in a new wildland fire management plan that meets current policies, provides a framework for making fire-related decisions, and serves as an operational manual. Development of a new fire plan is compatible with the broader goals and objectives derived from the park purpose that governs resources management. Alternatives are based on internal scoping done by National Park Service staff on October 17 and 18, 2001. Besides the No-action alternative, preliminary alternatives include the proposed Corridor Plan alternative and Landscape Plan alternative. The No-action alternative maintains the current 1992 fire management plan strategy of suppression, prescribed natural fire, and prescribed burning. The proposed alternative Corridor Plan alternative would allow natural fires and prescribed fires that meet management objectives except in the narrow corridor of developments. This area of the park would be subject to suppression and selective prescribed burning and mechanical thinning to reduce fuel hazards. The Landscape Plan alternative would call for the National Park Service and adjacent US Forest Service to jointly formulate a fire management plan that covers the entire landscape of the Chiricahua Mountains or a more naturally-bound portion of the range.

Major issues are environmental effects of the FMP that are potential problems and include reduction of plant and wildlife populations, disturbance of unique sites, increased erosion or debris flow, increased air pollution, hazards to life and property, visitor inconvenience, reduced tourism, and damage to cultural resources

A scoping brochure has been prepared describing the issues identified to date. Copies of the brochures may be obtained from Superintendent, Chiricahua National Monument, 13063 E. Bonita Canyon Road, Willcox, AZ 85643–9737. The scoping period will be 30 days from the date this notice is published in the **Federal Register**.

Comments

If you wish to comment on the scoping brochure, you may submit your comments by any one of several methods. You may mail comments to Superintendent, Chiricahua National

Monument, 13063 E. Bonita Canyon Road, Willcox, AZ 85643–9737. You may also comment via the Internet to CHIR_Superintendent@nps.gov. Please submit Internet comments as an ASCII file avoiding the use of special characters and any form of encryption. Please also include ''Attn: Chiricahua Fire Management Plan'' and your name and return address in your Internet message. If you do not receive a confirmation from the system that we have received your Internet message, contact us directly at Resources Management 520–824–3560 x120. Finally, you may hand-deliver comments to the above address or at the two public meetings that will be held in Portal, Arizona, and a location near the monument. Notification of the public meetings will be given in a brochure describing the fire planning process, which will be mailed to the addresses generated for the monument's recently approved general management plan. The brochure will be mailed once we are notified of the date that this Notice of Intent is published in the **Federal Register**. If you are not on the monument's mailing list and would like a copy of the brochure, please contact the Superintendent.

Our practice is to make comments, including names and home addresses of respondents, available for public review during regular business hours. Individual respondents may request that we withhold their home address from the record, which we will honor to the extent allowable by law. There also may be circumstances in which we would withhold from the record a respondent's identity, as allowable by law. If you wish us to withhold your name and/or address, you must state this prominently at the beginning of your comment. We will make all submissions from organizations or businesses, and from individuals identifying themselves as representatives or officials of organizations or businesses, available for public inspection in their entirety.

FOR FURTHER INFORMATION CONTACT: Superintendent, Chiricahua National Monument, 520–824–3560 x105.

Dated: December 20, 2001.

Michael D. Snyder,

Acting Director, Intermountain Region, National Park Service.

[FR Doc. 02–2308 Filed 1–30–02; 8:45 am]

BILLING CODE 4310–70–P

DEPARTMENT OF THE INTERIOR

National Park Service

Notice of Intent To Prepare an Environmental Impact Statement for the Schuylkill River Valley National Heritage, Management Plan Update

AGENCY: National Park Service, Department of the Interior.

ACTION: Notice of intent to prepare an Environmental Impact Statement for the Schuylkill River Valley National Heritage Management Plan Update.

SUMMARY: Under the provisions of the National Environmental Policy Act of 1969, the National Park Service is preparing an environmental impact statement (EIS) for the Management Plan for the Schuylkill River Valley National Heritage Area. The Schuylkill River Valley National Heritage Act of 2000 requires the Schuylkill River Greenway Association, with guidance from the National Park Service, to prepare an update of their 1995 Schuylkill Heritage Corridor Management Action Plan. The Management Plan Update is expected to include: (A) actions to be undertaken by units of government and private organizations to protect the resources of the Heritage Area; (B) an inventory of the resources contained in the Heritage Area, including an list of any property in the Heritage Area that is related to the themes of the Heritage Area and that should be preserved, restored, managed, developed, or maintained because of its natural, cultural, historical, recreational, or scenic significance; (C) a recommendation of policies for resource management that considers and details application of appropriate land and water management techniques, including the development of intergovernmental cooperative agreements to protect the historical, cultural, recreational, and natural resources of the Heritage Area in a manner consistent with supporting appropriate and compatible economic viability; (D) a program for implementation of the management plan by the management entity; (E) an analysis of ways in which local, State, and Federal programs may best be coordinated to promote the purposes of this title; and (F) an interpretation plan for the Heritage Area.

The study area, designated as the Schuylkill River Valley National Heritage, includes parts of the counties of: Schuykill, Berks, Chester, Montgomery and Philadelphia in southeastern Pennsylvania as associated with the Schuylkill River corridor.

The National Park Service (NPS) maintains two parks sites within the region: Valley Forge National Historical Park and the Hopewell Furnace National Historic Site. Otherwise the majority of land is non-federal and the NPS assumes a management role only within their park units. Instead, conservation, interpretation and other activities are managed by partnerships among federal, state, and local governments and private nonprofit organizations. The Schuylkill River Greenway Association manages the national heritage area. The National Park Service has been authorized by Congress to provide technical and financial assistance for a limited period (up to 10 years from the time of the designation in 2000).

The EIS will address a range of alternatives—they include a no-action alternative and other action alternatives. The impacts of the alternatives will be assessed through the EIS process.

A scoping meeting will be scheduled and notice will be made of the meeting through a broad public mailing and publication in the local newspapers.

FOR FURTHER INFORMATION CONTACT: Peter Samuel, Project Leader, Philadelphia Support Office, National Park Service, US Custom House, 200 Chestnut Street, Philadelphia, PA 19106, *peter_samuel@nps.gov*, 215–597–1848.

If you correspond using the internet, please include your name and return address in your e-mail message. Our practice is to make comments, including names and home addresses of respondents, available for public review. Individual respondents may request that we withhold their home address from the record, which we will honor or the extent allowable by law. There also may be circumstances in which we would withhold from the record a respondent's identify, as allowable by law. If you wish us to withhold your name and/or address, you must state this prominently at the beginning of your comment. However, we will not consider anonymous comments. We will make all submissions from organizations or businesses, and from individuals identifying themselves as representatives or officials or organizations or businesses, available for public inspection in their entirety.

Dated: December 18, 2001.

Dale Ditmanson,

Associate Regional Director, Park Operations and Education, Northeast Region.

[FR Doc. 02–2306 Filed 1–30–02; 8:45 am]

BILLING CODE 4310–70–M

DEPARTMENT OF THE INTERIOR

National Park Service

Golden Gate National Recreational Area and Point Reyes National Seashore Advisory Commission; Notice of Meeting Cancellation

Notice is hereby given in accordance with the Federal Advisory Committee Act that the meeting of the Golden Gate National Recreational Area and Point Reyes National Seashore Advisory Commission previously scheduled for Saturday, February 2, 2002 in Point Reyes Station, California will be cancelled.

The Advisory Commission was established by Public Law 92–589 to provide for the free exchange of ideas between the National Park Service and the public and to facilitate the solicitation of advice and other counsel from members of the public on problems pertinent to the National Park Service systems in Marin, San Francisco and San Mateo Counties. Members of the Commission are as follows:

Mr. Richard Bartke, Chairman
Ms. Susan Giacomini Allan
Mr. Michael Alexander
Ms. Lennie Roberts
Mr. Fred Rodriquez
Mr. Redmond Kernan
Mr. Gordon Bennett
Mr. John J. Spring
Mr. Doug Nadeau
Ms. Amy Meyer, Vice Chair
Mr. Douglas Siden
Mr. Dennis J. Rodoni
Ms. Yvonne Lee
Mr. Trent Orr
Ms. Betsey Cutler
Ms. Anna-Marie Booth
Dr. Edgar Wayburn
Mr. Paul Jones

Dated: January 11, 2002.

Don L. Neubacher,

Superintendent, Point Reyes National Seashore.

[FR Doc. 02–2307 Filed 1–30–02; 8:45 am]

BILLING CODE 4310–70–M

DEPARTMENT OF THE INTERIOR

National Park Service

National Register of Historic Places; Notification of Pending Nominations

Nominations for the following properties being considered for listing in the National Register were received by the National Park Service before January 19, 2002. Pursuant to § 60.13 of 36 CFR part 60 written comments concerning the significance of these properties under the National Register criteria for evaluation may be forwarded by United States Postal Service, to the National Register of Historic Places, National Park Service, 1849 C St. NW, NC400, Washington, DC 20240; by all other carriers, National Register of Historic Places, National Park Service, 800 N. Capitol St.NW, Suite 400, Washington DC 20002; or by fax, 202–343–1836 . Written or faxed comments should be submitted by February 15, 2002.

Carol D. Shull,

Keeper of the National Register Of Historic Places.

COLORADO

Denver County

Kerr House, 1900 E. 7th Ave. Pkwy, Denver, 02000125

Pueblo County

St. John's Greek Orthodox Church, 1000–1010 Spruce St., Pueblo, 02000123

GEORGIA

Madison County

Paoli Historic District, Jct. of Cty Rd. 334 amd Cty Rd. 331, Paoli, 02000094

Morgan County

Buckhead Historic District, Roughly bounded by Main St. and Parks Mill, Seven Islands and Baldwin Dairy Rds., Buckhead, 02000097

Washington County

Sanderville Commercial and Industrial District, (Georgia County Courthouses TR) Roughly Jernigan, Gilmore, North Smith, East Haynes, W. Haynes, and Warthen Sts., Sandersville, 02000120

ILLINOIS

Adams County

Ursa Town Hall, 109 S. Warsaw St., Ursa, 02000095
Woodland Cemetery, 1020 S. Fifth St., Quincy, 02000096

Coles County

Illinois Central Railroad Depot, 1718 Broadway Ave., Mattoon, 02000098

Cook County

Aquitania, The, 5000 Marine Dr., Chicago, 02000099
Gunderson Historic District, Roughly bounded by Madison St., Harrison St. Gunderson St., and S. Ridgeland Ave., Oak Park, 02000100

LOUISIANA

Natchitoches Parish

Jones, Jerry, House, LA 484, Melrose, 02000124

MARYLAND

Calvert County

JEFFERSONIAN Gunboats NUMBER 137 and NUMBER 138 (Shipwreck), Address Restricted, St. Leonard, 02000122

MISSOURI

Maries County

Maries County Jail and Sheriff's House, Jct. of Fifth and Mill Sts., Vienna, 02000101

Osage County

Zewicki, Dr. Enoch T. and Amy, House, 402 E. Main St., Linn, 02000121

St. Louis Independent City

Delany Building, 1000–06 Loust St., St. Louis (Independent City), 02000102

MONTANA

Madison County

Byam, Dr. Don L., House, Main St., Nevada City, 02000103
Finney House, Jct. of Main and California Sts., Nevada City, 02000104

Yellowstone County

Electric Building, 113–115 Broadway, Billings, 02000105

NEVADA

Clark County

Sloan Petroglyph Site (Boundary Increase), Address Restricted, Las Vegas, 02000114

NEW JERSEY

Atlantic County

Doughty, John, House, 40 North Shore Rd., Absecon City, 02000107

Middlesex County

Roosevelt Hospital, 1 Roosevelt Dr., Edison, 02000109

Morris County

United States Army Steam Locomotice No. 4039, 1 Railroad Plaza, 10 West and Whippany Rd., Hanover Township, 02000108

Union County

Grace Episcopal Church, 600 Cleveland Ave., Plainfield City, 02000106

NORTH CAROLINA

Burke County

Sloan—Throneburg Farm, NC 1429, 0.3 mi. W of jct. with NC 1450, Chesterfield, 02000110

Lee County

Farish—Lambeth House, (Lee County MPS) 6308 Deep River Rd., Sanford, 02000111

Mitchell County

Gunter Building, 288 Oak Ave., Spruce Pine, 02000112

Surry County

Hauser Farm, 308 Horne Creek Farm Rd., Pinnacle, 02000113

SOUTH CAROLINA

Greenwood County

Old Greenwood Cemetery, 503 E. Cambridge Ave., Greenwood, 02000115

TEXAS

Brazos County

Bryan Municipal Building, (Bryan MRA) 111 E. 27th St., Bryan, 02000116

Harris County

Boulevard Oaks Historic District, Roughly bounded by North Blvd., South Blvd., Hazard and Mandell Sts., Houston, 02000117

VERMONT

Franklin County

Swanton School, (Educational Resources of Vermont MPS) 53 Church St., Swanton, 02000118

Windsor County

Atherton Farmstead, 31 Greenbush Rd., Cavendish, 02000119

A request for REMOVAL has been made for the following resources:

SOUTH DAKOTA

Jones County

Van Metre Bridge (Historic Bridges in South Dakota MPS) Local Rd. over the Bad R. Murdo vicinity, 93001296

WISCONSIN

Waukesha County

Waukesha County Airport Hangar 24151 W. Bluemound Rd., Waukesha, 98001596

[FR Doc. 02–2287 Filed 1–30–02; 8:45 am]

BILLING CODE 4310–70–P

DEPARTMENT OF THE INTERIOR

National Park Service

Notice of Inventory Completion for Native American Human Remains and Associated Funerary Objects in the Possession of the University of Denver Department of Anthropology and Museum of Anthropology, Denver, CO

AGENCY: National Park Service, Interior.

ACTION: Notice.

Notice is hereby given in accordance with provisions of the Native American Graves Protection and Repatriation Act (NAGPRA), 43 CFR 10.9, of the completion of an inventory of human remains and associated funerary objects in the possession of the University of Denver Department of Anthropology and Museum of Anthropology, Denver, CO.

This notice is published as part of the National Park Service's administrative responsibilities under NAGPRA, 43 CFR 10.2 (c). The determinations within this notice are the sole responsibility of the museum, institution, or Federal agency that has control of these Native American human remains and associated funerary objects. The National Park Service is not responsible for the determinations within this notice.

A detailed assessment of the human remains was made by University of Denver Department of Anthropology and Museum of Anthropology professional staff and a contract physical anthropologist in consultation with representatives of the Big Pine Band of Owens Valley Paiute Shoshone Indians of the Big Pine Reservation, California; Death Valley Timbi-Sha Shoshone Band of California; Duckwater Shoshone Tribe of the Duckwater Reservation, Nevada; Ely Shoshone Tribe of Nevada; Fort McDermitt Paiute and Shoshone Tribes of the Fort McDermitt Indian Reservation, Nevada and Oregon; Northwestern Band of Shoshoni Nation of Utah (Washakie); Paiute-Shoshone Indians of the Bishop Community of the Bishop Colony, California; Paiute-Shoshone Indians of the Lone Pine Community of the Lone Pine Reservation, California; Paiute-Shoshone Tribe of the Fallon Reservation and Colony, Nevada; Shoshone Tribe of the Wind River Reservation, Wyoming; Shoshone-Bannock Tribes of the Fort Hall Reservation of Idaho; Shoshone-Paiute Tribes of the Duck Valley Reservation, Nevada; Te-Moak Tribes of Western Shoshone Indians of Nevada (four constituent bands: Battle Mountain Band, Elko Band, South Fork Band, and Wells Band); and the Yomba Shoshone Tribe of the Yomba Reservation, Nevada.

Around 1940, human remains representing two individuals were collected from the area of Big Sandy, Sublette County, WY, by Scott Peterson (Crow) and Alice Peterson (Shoshone). At an unknown date, the Petersons gave the remains to Theodore Sowers. Mr. Sowers was a graduate of the University of Denver and, in 1995, his daughters donated the remains to the University of Denver so that they could be repatriated. No known individuals were identified. No associated funerary objects are present.

The statements of the collectors and the donor indicate that these remains are Native American, which are supported by the osteological and geographical evidence. Linguistic and ethnographic evidence indicates that the ancestors of the Eastern Shoshone arrived in the Wind River region by A.D. 1000, and perhaps much earlier. The condition of the remains suggests that they are probably younger than 1000 years old. The Eastern Shoshone are currently represented by the Big Pine Band of Owens Valley Paiute Shoshone Indians of the Big Pine Reservation, California; Death Valley Timbi-Sha Shoshone Band of California; Duckwater Shoshone Tribe of the Duckwater Reservation, Nevada; Ely Shoshone Tribe of Nevada; Fort McDermitt Paiute and Shoshone Tribes of the Fort McDermitt Indian Reservation, Nevada and Oregon; Northwestern Band of Shoshoni Nation of Utah (Washakie); Paiute-Shoshone Indians of the Bishop Community of the Bishop Colony, California; Paiute-Shoshone Indians of the Lone Pine Community of the Lone Pine Reservation, California; Paiute-Shoshone Tribe of the Fallon Reservation and Colony, Nevada; Shoshone Tribe of the Wind River Reservation, Wyoming; Shoshone-Bannock Tribes of the Fort Hall Reservation of Idaho; Shoshone-Paiute Tribes of the Duck Valley Reservation, Nevada; Te-Moak Tribes of Western Shoshone Indians of Nevada (four constituent bands: Battle Mountain Band, Elko Band, South Fork Band, and Wells Band); and the Yomba Shoshone Tribe of the Yomba Reservation, Nevada.

Based on the above-mentioned information, officials of the University of Denver Department of Anthropology and Museum of Anthropology have determined that, pursuant to 43 CFR 10.2 (d)(1), the human remains listed above represent the physical remains of two individuals of Native American ancestry. Also, officials of the University of Denver Department of Anthropology and Museum of Anthropology have determined that, pursuant to 43 CFR 10.2 (e), there is a relationship of shared group identity that can be reasonably traced between these Native American human remains and the Big Pine Band of Owens Valley Paiute Shoshone Indians of the Big Pine Reservation, California; Death Valley Timbi-Sha Shoshone Band of California; Duckwater Shoshone Tribe of the Duckwater Reservation, Nevada; Ely Shoshone Tribe of Nevada; Fort McDermitt Paiute and Shoshone Tribes of the Fort McDermitt Indian Reservation, Nevada and Oregon; Northwestern Band of Shoshoni Nation of Utah (Washakie); Paiute-Shoshone Indians of the Bishop Community of the Bishop Colony, California; Paiute-Shoshone Indians of the Lone Pine Community of the Lone Pine Reservation, California; Paiute-Shoshone Tribe of the Fallon Reservation and Colony, Nevada; Shoshone Tribe of the Wind River Reservation, Wyoming; Shoshone-Bannock Tribes of the Fort Hall Reservation of Idaho; Shoshone-Paiute Tribes of the Duck Valley Reservation, Nevada; Te-Moak Tribes of Western

Shoshone Indians of Nevada (four constituent bands: Battle Mountain Band, Elko Band, South Fork Band, and Wells Band); and the Yomba Shoshone Tribe of the Yomba Reservation, Nevada.

This notice has been sent to officials of the Big Pine Band of Owens Valley Paiute Shoshone Indians of the Big Pine Reservation, California; Death Valley Timbi-Sha Shoshone Band of California; Duckwater Shoshone Tribe of the Duckwater Reservation, Nevada; Ely Shoshone Tribe of Nevada; Fort McDermitt Paiute and Shoshone Tribes of the Fort McDermitt Indian Reservation, Nevada and Oregon; Northwestern Band of Shoshoni Nation of Utah (Washakie); Paiute-Shoshone Indians of the Bishop Community of the Bishop Colony, California; Paiute-Shoshone Indians of the Lone Pine Community of the Lone Pine Reservation, California; Paiute-Shoshone Tribe of the Fallon Reservation and Colony, Nevada; Shoshone Tribe of the Wind River Reservation, Wyoming; Shoshone-Bannock Tribes of the Fort Hall Reservation of Idaho; Shoshone-Paiute Tribes of the Duck Valley Reservation, Nevada; Te-Moak Tribes of Western Shoshone Indians of Nevada (four constituent bands: Battle Mountain Band, Elko Band, South Fork Band, and Wells Band); and the Yomba Shoshone Tribe of the Yomba Reservation, Nevada. Representatives of any other Indian tribe that believes itself to be culturally affiliated with these human remains should contact Jan I. Bernstein, Collections Manager and NAGPRA Coordinator at the University of Denver Department of Anthropology and Museum of Anthropology, 2000 Asbury, Sturm Hall S-146, Denver, CO 80208-2406, email jbernste@du.edu, telephone (303) 871-2543, before March 4, 2002. Repatriation of the human remains to the Big Pine Band of Owens Valley Paiute Shoshone Indians of the Big Pine Reservation, California; Death Valley Timbi-Sha Shoshone Band of California; Duckwater Shoshone Tribe of the Duckwater Reservation, Nevada; Ely Shoshone Tribe of Nevada; Fort McDermitt Paiute and Shoshone Tribes of the Fort McDermitt Indian Reservation, Nevada and Oregon; Northwestern Band of Shoshoni Nation of Utah (Washakie); Paiute-Shoshone Indians of the Bishop Community of the Bishop Colony, California; Paiute-Shoshone Indians of the Lone Pine Community of the Lone Pine Reservation, California; Paiute-Shoshone Tribe of the Fallon Reservation and Colony, Nevada; Shoshone Tribe of the Wind River Reservation, Wyoming; Shoshone-Bannock Tribes of the Fort Hall Reservation of Idaho; Shoshone-Paiute Tribes of the Duck Valley Reservation, Nevada; Te-Moak Tribes of Western Shoshone Indians of Nevada (four constituent bands: Battle Mountain Band, Elko Band, South Fork Band, and Wells Band); and the Yomba Shoshone Tribe of the Yomba Reservation, Nevada, may begin after that date if no additional claimants come forward.

Dated: January 14, 2002.

Robert Stearns,

Manager, National NAGPRA Program.

[FR Doc. 02–2309 Filed 1–30–02; 8:45 am]

BILLING CODE 4310–70–S

DEPARTMENT OF THE INTERIOR

Bureau of Reclamation

Quarterly Status Report of Water Service, Repayment, and Other Water-Related Contract Negotiations

AGENCY: Bureau of Reclamation, Interior.

ACTION: Notice.

SUMMARY: Notice is hereby given of proposed contractual actions pending through December 31, 2001, and contract actions that have been completed or discontinued since the last publication of this notice on October 25, 2001. From the date of this publication, future quarterly notices during this calendar year will be limited to new, modified, discontinued, or completed contract actions. This annual notice should be used as a point of reference to identify changes in future notices. This notice is one of a variety of means used to inform the public about proposed contractual actions for capital recovery and management of project resources and facilities. Additional Bureau of Reclamation (Reclamation) announcements of individual contract actions may be published in the **Federal Register** and in newspapers of general circulation in the areas determined by Reclamation to be affected by the proposed action. Announcements may be in the form of news releases, legal notices, official letters, memorandums, or other forms of written material. Meetings, workshops, and/or hearings may also be used, as appropriate, to provide local publicity. The public participation procedures do not apply to proposed contracts for sale of surplus or interim irrigation water for a term of 1 year or less. Either of the contracting parties may invite the public to observe contract proceedings. All public participation procedures will be coordinated with those involved in complying with the National Environmental Policy Act.

ADDRESSES: The identity of the approving officer and other information pertaining to a specific contract proposal may be obtained by calling or writing the appropriate regional office at the address and telephone number given for each region in the supplementary information.

FOR FURTHER INFORMATION CONTACT: Sandra L. Simons, Manager, Water Contracts and Repayment Office, Bureau of Reclamation, PO Box 25007, Denver, Colorado 80225–0007; telephone 303–445–2902.

SUPPLEMENTARY INFORMATION: Pursuant to section 226 of the Reclamation Reform Act of 1982 (96 Stat. 1273) and 43 CFR 426.20 of the rules and regulations published in 52 FR 11954, Apr. 13, 1987, Reclamation will publish notice of the proposed or amendatory contract actions for any contract for the delivery of project water for authorized uses in newspapers of general circulation in the affected area at least 60 days prior to contract execution. Pursuant to the ''Final Revised Public Participation Procedures'' for water resource-related contract negotiations, published in 47 FR 7763, Feb. 22, 1982, a tabulation is provided of all proposed contractual actions in each of the five Reclamation regions. Each proposed action is, or is expected to be, in some stage of the contract negotiation process in 2002. When contract negotiations are completed, and prior to execution, each proposed contract form must be approved by the Secretary of the Interior, or pursuant to delegated or redelegated authority, the Commissioner of Reclamation or one of the regional directors. In some instances, congressional review and approval of a report, water rate, or other terms and conditions of the contract may be involved.

Public participation in and receipt of comments on contract proposals will be facilitated by adherence to the following procedures:

1. Only persons authorized to act on behalf of the contracting entities may negotiate the terms and conditions of a specific contract proposal.

2. Advance notice of meetings or hearings will be furnished to those parties that have made a timely written request for such notice to the appropriate regional or project office of Reclamation.

3. Written correspondence regarding proposed contracts may be made available to the general public pursuant

to the terms and procedures of the Freedom of Information Act (80 Stat. 383), as amended.

4. Written comments on a proposed contract or contract action must be submitted to the appropriate regional officials at the locations and within the time limits set forth in the advance public notices.

5. All written comments received and testimony presented at any public hearings will be reviewed and summarized by the appropriate regional office for use by the contract approving authority.

6. Copies of specific proposed contracts may be obtained from the appropriate regional director or his designated public contact as they become available for review and comment.

7. In the event modifications are made in the form of a proposed contract, the appropriate regional director shall determine whether republication of the notice and/or extension of the comment period is necessary.

Factors considered in making such a determination shall include, but are not limited to: (i) the significance of the modification, and (ii) the degree of public interest which has been expressed over the course of the negotiations. As a minimum, the regional director shall furnish revised contracts to all parties who requested the contract in response to the initial public notice.

Acronym Definitions Used Herein

BON Basis of Negotiation
BCP Boulder Canyon Project
Reclamation Bureau of Reclamation
CAP Central Arizona Project
CUP Central Utah Project
CVP Central Valley Project
CRSP Colorado River Storage Project
D&MC Drainage and Minor Construction
FR Federal Register
IDD Irrigation and Drainage District
ID Irrigation District
M&I Municipal and Industrial
NEPA National Environmental Policy Act
O&M Operation and Maintenance
P–SMBP Pick-Sloan Missouri Basin Program
PPR Present Perfected Right
RRA Reclamation Reform Act
R&B Rehabilitation and Betterment
SOD Safety of Dams
SRPA Small Reclamation Projects Act
WCUA Water Conservation and Utilization Act
WD Water District

Pacific Northwest Region: Bureau of Reclamation, 1150 North Curtis Road, Suite 100, Boise, Idaho 83706–1234, telephone 208–378–5223.

1. Irrigation, M&I, and miscellaneous water users; Idaho, Oregon, Washington, Montana, and Wyoming: Temporary or interim water service contracts for irrigation, M&I, or miscellaneous use to provide up to 10,000 acre-feet of water annually for terms up to 5 years; long-term contracts for similar service for up to 1,000 acre-feet of water annually.

2. Rogue River Basin Water Users, Rogue River Basin Project, Oregon: Water service contracts; $8 per acre-foot per annum.

3. Willamette Basin Water Users, Willamette Basin Project, Oregon: Water service contracts; $8 per acre-foot per annum.

4. Pioneer Ditch Company, Boise Project, Idaho; Clark and Edwards Canal and Irrigation Company, Enterprise Canal Company, Ltd., Fremont-Madison ID, Lenroot Canal Company, Liberty Park Canal Company, Parsons Ditch Company, Poplar ID, Wearyrick Ditch Company, all in the Minidoka Project, Idaho; Juniper Flat District Improvement Company, Wapinitia Project, Oregon; and Gem, Ridgeview, and Owyhee IDs, Owyhee Project, Oregon: Amendatory repayment and water service contracts; purpose is to conform to the RRA (Public Law 97–293).

5. Bridgeport ID, Chief Joseph Dam Project, Washington: Warren Act contract for the use of an irrigation outlet in Chief Joseph Dam.

6. Palmer Creek Water District Improvement Company, Willamette Basin Project, Oregon: Irrigation water service contract for approximately 13,000 acre-feet.

7. U. S. Fish and Wildlife Service and Boise-Kuna ID, Boise Project, Idaho: Memorandum of agreement for the use of approximately 400 acre-feet of storage space annually in Anderson Ranch Reservoir. Water to be used for wildlife mitigation purposes (ponds and wetlands).

8. North Unit ID and/or city of Madras, Deschutes Project, Oregon: Long-term municipal water service contract for provision of approximately 125 acre-feet annually from the project water supply to the city of Madras.

9. North Unit ID, Deschutes Project, Oregon: Warren Act contract with cost of service charge to allow for use of project facilities to convey nonproject water.

10. Baker Valley ID, Baker Project, Oregon: Warren Act contract with cost of service charge to allow for use of project facilities to store nonproject water.

11. Trendwest Resorts, Yakima Project, Washington: Long-term water exchange contract for assignment of Teanaway River and Big Creek water rights to Reclamation for instream flow use in exchange for annual use of up to 3,500 acre-feet of water from Cle Elum Reservoir for a proposed resort development.

12. City of Cle Elum, Yakima Project, Washington: Contract for up to 2,170 acre-feet of water for municipal use.

13. Burley ID, Minidoka Project, Idaho-Wyoming: Supplemental and amendatory contract providing for the transfer of O&M of the headworks of the Main South Side Canal and works incidental thereto.

14. Minidoka ID, Minidoka Project, Idaho-Wyoming: Supplemental and amendatory contract providing for the transfer of O&M of the headworks of the Main North Side Canal and works incidental thereto.

15. Fremont-Madison ID, Minidoka Project, Idaho-Wyoming: Repayment contract for reimbursable cost of SOD modifications to Grassy Lake Dam.

16. Twenty-two irrigation districts of the Storage Division, Yakima Project, Washington: Repayment agreements for the reimbursable cost of SOD modifications to Keechelus Dam.

17. Wenatchee Heights Reclamation District, Washington: Deferment contract for the deferment of the District's annual installments due in 2001 and 2002 under a Drought Act loan contract.

18. Individual irrigation water user, Rogue River Basin Project, Oregon: Water service contract to provide 1,029 acre-feet of stored water from Lost Creek Reservoir (a Corps of Engineers' project) for the purpose of irrigation.

19. Roza ID, Yakima Project, Washington: Deferment contract for the deferment of the District's 2001 construction obligation under the Drought Act of 1959.

20. Queener Irrigation Improvement District, Willamette Basin Project, Oregon: Renewal of long-term water service contract to provide up to 2,150 acre-feet of stored water from the Willamette Basin Project (a Corps of Engineers' project) for the purpose of irrigation within the District's service area.

21. Vale and Warm Springs IDs, Vale Project, Oregon: Repayment contract for reimbursable cost of SOD modifications to Warm Springs Dam.

22. Hermiston, Stanfield, and West Extension IDs, Umatilla Project, Oregon: Amendatory repayment contracts for long-term boundary expansions to include lands outside of federally recognized district boundaries.

The following contract action has been completed since the last

publication of this notice on October 25, 2001.

1. (14) Farmer's and Buck and Jones Ditch Associations or the Applegate Irrigation Corporation, Rogue River Basin Project, Oregon: Long-term irrigation water service contract for provision of up to 4,475 acre-feet of stored water from Applegate Reservoir (a Corps of Engineers' project) in exchange for the assignment of Little Applegate River natural flow rights to Reclamation for instream flow use. Contract was executed on October 1, 2001.

Mid-Pacific Region: Bureau of Reclamation, 2800 Cottage Way, Sacramento, California 95825–1898, telephone 916–978–5250.

1. Irrigation water districts, individual irrigators, M&I and miscellaneous water users, Mid-Pacific Region projects other than CVP: Temporary (interim) water service contracts for available project water for irrigation, M&I, or fish and wildlife purposes providing up to 10,000 acre-feet of water annually for terms up to 5 years; temporary Warren Act contracts for use of project facilities for terms up to 1 year; temporary conveyance agreements with the State of California for various purposes; long-term contracts for similar service for up to 1,000 acre-feet annually.

Note: Upon written request, copies of the standard forms of temporary water service contracts for the various types of service are available from the Regional Director at the address shown above.

2. Contractors from the American River Division, Cross Valley Canal, Delta Division, Friant Division, Sacramento River Division, San Felipe Division, Shasta Division, Trinity River Division, and West San Joaquin Division, CVP, California: Early renewal of existing long-term contracts; long-term renewal of the interim renewal water service contracts expiring in 2002; water quantities for these contracts total in excess of 3.4M acre-feet. These contract actions will be accomplished through long-term renewal contracts pursuant to Public Law 102–575. Prior to completion of negotiation of long-term renewal contracts, existing interim renewal water service contracts may be renewed through successive interim renewal of contracts.

3. Redwood Valley County WD, SRPA, California: Restructuring the repayment schedule pursuant to Public Law 100–516.

4. El Dorado County Water Agency, CVP, California: M&I water service contract to supplement existing water supply: 15,000 acre-feet for El Dorado County Water Agency authorized by Public Law 101–514.

5. Sutter Extension and Biggs-West Gridley WDs, Buena Vista Water Storage District, and the State of California Department of Water Resources, CVP, California: Pursuant to Public Law 102–575, conveyance agreements for the purpose of wheeling refuge water supplies and funding District facility improvements and exchange agreements to provide water for refuge and private wetlands.

6. Mountain Gate Community Services District, CVP, California: Amendment of existing long-term water service contract to include right to renew. This amendment will also conform the contract to current Reclamation law, including Public Law 102–575.

7. Cachuma Operation and Maintenance Board, Cachuma Project, California: Repayment contract for SOD work on Bradbury Dam.

8. CVP Service Area, California: Temporary water purchase agreements for acquisition of 20,000 to 200,000 acre-feet of water for fish and wildlife purposes as authorized by the Central Valley Project Improvement Act for terms of up to 3 years.

9. City of Roseville, CVP, California: Execution of long-term Warren Act contract for conveyance of nonproject water provided from the Placer County Water Agency. This contract will allow CVP facilities to be used to deliver nonproject water to the City of Roseville for use within their service area.

10. Sacramento Municipal Utility District, CVP, California: Amendment of existing water service contract to allow for additional points of diversion and assignment of up to 30,000 acre-feet of project water to the Sacramento County Water Agency. The amended contract will conform to current Reclamation law.

11. Mercy Springs WD, CVP, California: Partial assignment of about 7,000 acre-feet of Mercy Springs WD's water service contract to Westlands WD for agricultural use.

12. Cachuma Operations and Maintenance Board, Cachuma Project, California: Temporary interim contract (not to exceed 1 year) to transfer responsibility of certain Cachuma Project facilities to member units.

13. M&T, Inc., Sacramento River Water Rights Contractors, CVP, California: A proposed exchange agreement with M&T, Inc., to take Butte Creek water rights water from the Sacramento River in exchange for CVP water to facilitate habitat restoration.

14. El Dorado ID, CVP, California: Execution of long-term Warren Act contract for conveyance of nonproject water. This contract will allow CVP facilities to be used to deliver nonproject water to the El Dorado ID for use within their service area.

15. Placer County Water Agency, CVP, California: Amendment of existing water service contract to allow for additional points of diversion and adjustment to CVP water quantities. The amended contract will conform to current Reclamation law.

16. Horsefly, Klamath, Langell Valley, and Tulelake IDs, Klamath Project, Oregon: Repayment contract for SOD work on Clear Lake Dam.

17. Casitas Municipal WD, Ventura Project, California: Repayment contract for SOD work on Casistas Dam.

18. Warren Act Contracts, CVP, California: Execution of long-term Warren Act contracts (up to 25 years) with various entities for conveyance of nonproject water in the Delta-Mendota Canal and the Friant Division facilities.

19. Tuolumne Utilities District (formerly Tuolumne Regional WD), CVP, California: Long-term water service contract for up to 9,000 acre-feet from New Melones Reservoir, and possibly long-term contract for storage of nonproject water in New Melones Reservoir.

20. Banta Carbona ID, CVP, California: Long-term Warren Act contract for conveyance of nonproject water in the Delta-Mendota Canal.

21. Plain View WD, CVP, California: Long-term Warren Act contract for conveyance of nonproject water in the Delta-Mendota Canal.

22. City of Redding, CVP, California: Amend water service contract, No. 14–06–200–5272A, for the purpose of renegotiating the provisions of contract Article 15, ''Water Shortage and Apportionment,'' to conform to current CVP M&I water shortage policy.

23. Byron-Bethany ID, CVP, California: Long-term Warren Act contract for conveyance of nonproject water in the Delta-Mendota Canal.

24. Resource Renewal Institute, CVP, California: Proposed water purchase agreement with Resource Renewal Institute for the permanent purchase of water rights on Butte Creek for instream flow purposes.

25. Sacramento Area Flood Control Agency, CVP, California: Execution of a long-term operations agreement for flood control operations of Folsom Dam and Reservoir to allow for recovery of costs associated with operating a variable flood control pool of 400,000 to 670,000 acre-feet of water during the flood control season. This agreement is to conform to Federal law.

26. Lower Tule River, Porterville, and Vandalia IDs; and Pioneer Water Company, Success Project, California:

Repayment contract for the SOD costs assigned to the irrigation purpose of Success Dam.

27. Colusa County WD, CVP, California: Proposed long-term Warren Act contract for conveyance of up to 4,500 acre-feet of ground water through the Tehama-Colusa Canal.

28. Friant Water Users Authority and San Luis and Delta-Mendota Water Authority, CVP, California: Amendments to the Operation, Maintenance, and Replacement and Certain Financial and Administrative Activities' Agreements to implement certain changes to the Direct Funding provisions to comply with applicable Federal law.

29. Madera-Chowchilla Water and Power Authority, CVP, California: Agreement to transfer the operation, maintenance, and replacement and certain financial and administrative activities related to the Madera Canal and associated works.

30. El Dorado ID, CVP, California: Title transfer agreement for conveyance of CVP facilities. This agreement will allow transfer of title for Sly Park Dam, Jenkinson Lake, and appurtenant facilities from the CVP to El Dorado ID.

31. Foresthill Public Utility District, CVP, California: Title transfer agreement for conveyance of CVP facilities. This agreement will allow transfer of title for Sugar Pine Dam and appurtenant facilities from the CVP to Foresthill Public Utility District.

32. Carpinteria WD, Cachuma Project, California: Contract to transfer title of distribution system to the District. Title transfer subject to Congressional ratification.

33. Montecito WD, Cachuma Project, California: Contract to transfer title of distribution system to the District. Title transfer subject to Congressional ratification.

34. City of Vallejo, Solano Project, California: Execution of long-term Warren Act contract for conveyance of nonproject water. This contract will allow Solano Project facilities to be used to deliver nonproject water to the City of Vallejo for use within their service area.

35. Northridge WD, CVP, California: Execution of long-term Warren Act contract for conveyance of nonproject water. This contract will allow CVP facilities to be used to deliver nonproject water to the Northridge WD for use within their service area.

36. Sierra Pacific Power Company, Town of Fernley, State of California, City of Reno, City of Sparks, Washoe County, State of Nevada, Truckee-Carson ID, and any other local interest or Native American Tribal Interest, who may have negotiated rights under Public Law 101–618; Nevada and California: Contract for the storage of non-Federal water in Truckee River reservoirs as authorized by Public Law 101–618 and the Preliminary Settlement Agreement. The contracts shall be consistent with the Truckee River Water Quality Settlement Agreement and the terms and conditions of the proposed Truckee River Operating Agreement.

37. Contra Costa WD, CVP, California: Amend water service contract No. I75r–3401A to extend the date for renegotiation of the provisions of contract Article 12 ''Water Shortage and Apportionment.''

38. Cachuma Operation and Maintenance Board, Cachuma Project, California: Contract to transfer responsibility for O&M and O&M funding of certain Cachuma Project facilities to the member units.

The following contract action has been discontinued since the last publication of this notice on October 25, 2001.

1. (45) Delano-Earlimart, Exeter, Ivanhoe, Lindmore, Lindsay-Strathmore, Madera, Shafter-Wasco, and Stone Corral IDs; South San Joaquin Municipal Utilities District; and Tea Pot Dome WD; Friant Unit, CVP, California: Contract to transfer title of 11 distribution systems to the respective districts. All title transfers subject to Congressional ratification. This item is discontinued because the districts are reviewing the feasibility of the proposal to transfer the distribution systems.

The following contract action has been completed since the last publication of this notice on October 25, 2001.

1. (28) Tehama-Colusa Canal Authority, CVP, California: Amendment of existing long-term O&M agreement to also include the O&M of the Red Bluff Diversion Dam and related facilities and to implement certain changes to the Direct Funding provisions of the O&M Agreement to comply with applicable Federal law. Amendatory contract executed December 13, 2001.

Lower Colorado Region: Bureau of Reclamation, PO Box 61470 (Nevada Highway and Park Street), Boulder City, Nevada 89006–1470, telephone 702–293–8536.

1. Milton and Jean Phillips, Cameron Brothers Construction Co., Ogram Farms, John J. Peach, Sunkist Growers, Inc., BCP, Arizona: Colorado River water delivery contracts, as recommended by the Arizona Department of Water Resources, with agricultural entities located near the Colorado River for up to 3,168 acre-feet per year total.

2. Brooke Water Co., BCP, Arizona: Amend contract for an additional 120 acre-feet per year of Colorado River water for domestic uses as recommended by the Arizona Department of Water Resources.

3. National Park Service for Lake Mead National Recreation Area, Supreme Court Decree in *Arizona* v. *California,* and BCP in Arizona and Nevada: Agreement for delivery of Colorado River water for the National Park Service's Federal Establishment PPR for diversion of 500 acre-feet annually and the National Park Service's Federal Establishment PPR pursuant to Executive Order No. 5125 (April 25, 1930).

4. Miscellaneous PPR entitlement holders, BCP, Arizona and California: New contracts for entitlement to Colorado River water as decreed by the U.S. Supreme Court in *Arizona* v. *California,* as supplemented or amended, and as required by section 5 of the Boulder Canyon Project Act. Miscellaneous PPRs holders are listed in the January 9, 1979, Supreme Court Supplemental Decree in *Arizona* v. *California et al.*

5. Miscellaneous PPR No. 11, BCP, Arizona: Assign a portion of the PPR from Holpal to McNulty et al.

6. Curtis Family Trust et al., BCP, Arizona: Contract for 2,100 acre-feet per year of Colorado River water for irrigation.

7. Beattie Farms SW, BCP, Arizona: Contract for 1,890 acre-feet per year of unused Arizona entitlement of Colorado River water for irrigation.

8. U.S. Fish and Wildlife Service, Lower Colorado River Refuge Complex, BCP, Arizona: Agreement to administer the Colorado River water entitlement for refuge lands located in Arizona to resolve water rights coordination issues and to provide for an additional entitlement for non-consumptive use of flow through water.

9. Maricopa-Stanfield IDD, CAP, Arizona: Amend distribution system repayment contract No. 4–07–30–W0047 to reschedule repayment pursuant to June 28, 1996, agreement.

10. Indian and non-Indian agricultural and M&I water users, CAP, Arizona: New and amendatory contracts for repayment of Federal expenditures for construction of distribution systems.

11. San Tan ID, CAP, Arizona: Amend distribution system repayment contract No. 6–07–30–W0120 to increase the repayment obligation by approximately $168,000.

12. Central Arizona Drainage and ID, CAP, Arizona: Amend distribution system repayment contract No. 4–07–30–W0048 to modify repayment terms

pursuant to final order issued by U.S. Bankruptcy Court, District of Arizona.

13. City of Needles, Lower Colorado Water Supply Project, California: Amend contract No. 2–07–30–W0280 to extend the City's water service subcontracting authority to the Counties of Imperial and Riverside.

14. Imperial ID/Coachella Valley WD and/or The Metropolitan WD of Southern California, BCP, California: Contract to fund the Department of the Interior's expenses to conserve All-American Canal seepage water in accordance with Title II of the San Luis Rey Indian Water Rights Settlement Act dated November 17, 1988.

15. Coachella Valley WD and/or The Metropolitan WD of Southern California, BCP, California: Contract to fund the Department of the Interior's expenses to conserve seepage water from the Coachella Branch of the All-American Canal in accordance with Title II of the San Luis Rey Indian Water Rights Settlement Act, dated November 17, 1988.

16. Salt River Pima-Maricopa Indian Community, CAP, Arizona: O&M contract for its CAP water distribution system.

17. Arizona State Land Department, BCP, Arizona: Colorado River water delivery contract for 1,535 acre-feet per year for domestic use.

18. Miscellaneous PPR No. 38, BCP, California: Assign Schroeder's portion of the PPR to Murphy Broadcasting.

19. Berneil Water Co., CAP, Arizona: Water service contracts associated with partial assignment of water service to the Cave Creek Water Company.

20. Tohono O'odham Nation, CAP, Arizona: Repayment contract for a portion of the construction costs associated with water distribution system for Central Arizona IDD.

21. Tohono O'odham Nation, CAP, Arizona: Contracts for Schuk Toak and San Xavier Districts for repayment of Federal expenditures for construction of distribution systems.

22. Canyon Forest Village II Corporation, BCP, Arizona: Colorado River water delivery contract for up to 400 acre-feet per year of unused Arizona apportionment or surplus apportionment for domestic use.

23. Gila Project Works, Gila Project, Arizona: Title transfer of facilities and certain lands in the Wellton-Mohawk Division from the United States to the Wellton-Mohawk IDD.

24. ASARCO Inc., CAP, Arizona: Amendment of subcontract to extend the deadline until December 31, 2002, for giving notice of termination on exchange.

25. Cyprus Miami Mining Corporation, CAP, Arizona: Amendment of subcontract to extend the deadline until December 31, 2002, for giving notice of termination on exchange.

26. Gila River Indian Community, CAP, Arizona: Amend CAP water delivery contract and distribution system repayment and operation, maintenance, and replacement contract pursuant to anticipated Gila River Indian Community Water Rights Settlement Agreement.

27. California Water Districts, BCP, California: Incorporate into the water delivery contracts with several water districts (Coachella Valley WD, Imperial ID, Palo Verde ID, and The Metropolitan WD of Southern California), through new contracts, contract amendments, contract approvals, or other appropriate means, the agreement to be reached with those water districts to (i) quantify the Colorado River water entitlements for Coachella Valley WD and Imperial ID and (ii) provide a basis for water transfers among California water districts.

28. Coachella Valley WD, BCP, California: Amend contract No. 14–20–650–631 with Coachella Valley WD to include additional lands on the Torres Martinez Indian Reservation that are located within the District's Improvement District No. 1 which were reclassified and determined to be arable.

29. North Gila Valley IDD, Yuma ID, and Yuma Mesa IDD, Yuma Mesa Division, Gila Project, Arizona: Administrative action to amend each district's Colorado River water delivery contract to effectuate a change from a ''pooled'' water entitlement for the Division to a quantified entitlement for each district.

30. Indian and/or non-Indian M&I users, CAP, Arizona: New or amendatory water service contracts or subcontracts in accordance with an anticipated final record of decision for reallocation of CAP water, as discussed in the Secretary of the Interior's notice published on page 41456 of the FR on July 30, 1999.

31. San Carlos Apache Tribe, CAP, Arizona: Agreement among the San Carlos Apache Tribe, the Salt River Project, and the United States, for exchange of up to 14,000 acre-feet of Black River water for CAP water.

32. San Carlos Apache Tribe, Arizona: Agreement among the San Carlos-Apache Tribe, the United States, and the Phelps Dodge Corporation for the lease of CAP water.

33. Arizona Water Banking Authority and Southern Nevada Water Authority, BCP, Arizona and Nevada: Contract to provide for the interstate contractual distribution of Colorado River water through the offstream storage of Colorado River water in Arizona, the development by the Arizona Water Banking Authority of intentionally created unused apportionment, and the release of this intentionally created unused apportionment by the Secretary of the Interior to Southern Nevada Water Authority.

34. Gila River Farms, Arizona: Amendment of SRPA contract to restructure the repayment schedule.

35. Litchfield Park Service Company, CAP, Arizona: Proposed assignments of 5,580 acre-feet of CAP M&I water to the Central Arizona Groundwater Replenishment District and to the cities of Avondale, Carefree, and Goodyear.

36. Shepard Water Company, Inc., Arizona: Contract for the delivery of 50 acre-feet of domestic water.

37. The United States International Boundary and Water Commission, The Metropolitan WD of Southern California, San Diego County Water Authority, and Otay WD, Mexican Treaty Waters: Agreement for the temporary emergency delivery of a portion of the Mexican Treaty waters of the Colorado River to the International Boundary in the vicinity of Tijuana, Baja California, Mexico.

38. Arizona State Land Department, CAP, Arizona: Proposed assignment of 1,000 acre-feet of the Department's CAP M&I water entitlement to the City of Peoria.

39. Gila River Indian Community, Arizona: Operation, maintenance, and replacement contract for an archeological repository named the Huhugam Heritage Center.

40. Sonny Gowan, BCP, California: Approval to lease up to 175 acre-feet of his PPR water to Moabi Regional Park.

41. Jessen Family Limited Partnership, BCP, Arizona: Partial contract assignment of agricultural water from Arlin Dulin to Jessen Family Limited Partnership.

42. Robson Communities, Southern Arizona Water Rights Settlement Act, Arizona: United States contract with Robson Communities for the sale of 1,618 acre-feet of long-term water storage credits accrued in Tucson during calendar year 2000.

43. Cities of Chandler and Mesa, CAP, Arizona: Amendments to the CAP M&I water service subcontracts of the cities of Chandler and Mesa to remove the language stating that direct effluent exchange agreements with Indian Communities are subject to the ''pooling concept.''

44. City of Somerton, BCP, Arizona: Contract for the delivery of up to 750

acre-feet of Colorado River water for domestic use.

45. Various Irrigation Districts, CAP, Arizona: Amend distribution system repayment contracts to provide for partial assumption of debt by the Central Arizona Water Conservation District and the United States upon enactment of Federal legislation providing for resolution of CAP issues.

46. Mohave County Water Authority, BCP, Arizona: Amendatory Colorado River water delivery contract to include the delivery of 3,500 acre-feet per year of fourth priority water and to delete the delivery of 3,500 acre-feet per year of fifth or sixth priority water.

The following contract actions have been discontinued since the last publication of this notice on October 25, 2001.

1. (2) Armon Curtis, Arlin Dulin, Jack Rayner, Glen Curtis, Jamar Produce Corporation, and Ansel T. Hall, BCP, Arizona: Amendatory Colorado River water delivery contracts to exempt each referenced contractor from the acreage limitation and full cost pricing provisions of the RRA.

2. (5) Mohave Valley IDD, BCP, Arizona: Amendment of current contract for additional Colorado River water, change in service area, diversion points, RRA exemption and PPRs.

3. (8) Federal Establishment PPRs entitlement holders, BCP: Individual contracts for administration of Colorado River water entitlement of the Colorado River, Fort Mojave, Quechan, Chemehuevi, and Cocopah Indian Tribes.

4. (9) United States facilities, BCP, California: Reservation of Colorado River water for use at existing Federal facilities and lands administered by Reclamation.

5. (10) Bureau of Land Management, BCP, Arizona: Contract for 1,176 acre-feet per year, for irrigation use, of Arizona's Colorado River water that is not used by higher priority Arizona entitlement holders.

6. (14) Hillander C ID, Colorado River Basin Salinity Control Project, Arizona: Colorado River water delivery contract for 4,500 acre-feet per year.

7. (17) Tohono O'odham Nation, SRPA, Arizona: Repayment contract for a $7.3 million loan for the Schuk Toak District.

8. (36) Agricultural and M&I water users, CAP, Arizona: Water service subcontracts for percentages of available supply reallocated in 1992 for irrigation entities and up to 640,000 acre-feet per year allocated in 1983 for M&I use.

9. (38) Hohokam IDD, CAP, Arizona: Amend water distribution system repayment contract to reflect final project costs.

10. (40) Basic Management, Inc., Salinity Project, Nevada: Title transfer of the Pitman Wash Bypass Demonstration Project Facilities and all interests in acquired lands and easements associated with an obligation to continue bypassing the water in Pitman Wash.

The following contract actions have been completed since the last publication of this notice on October 25, 2001.

1. (25) U.S. Army Proving Ground, BCP, Arizona: Amend agreement to add additional points of diversion for Colorado River water.

2. (58) Golden Shores Water Conservation District, BCP, Arizona: Amendment of water delivery contract to recognize that some private lands outside the district but within its exterior boundaries have been included within the district's boundaries.

Upper Colorado Region: Bureau of Reclamation, 125 South State Street, Room 6107, Salt Lake City, Utah 84138–1102, telephone 801–524–4419.

1. Individual irrigators, M&I, and miscellaneous water users, Initial Units, CRSP; Utah, Wyoming, Colorado, and New Mexico: Temporary (interim) water service contracts for surplus project water for irrigation or M&I use to provide up to 10,000 acre-feet of water annually for terms up to 10 years; long-term contracts for similar service for up to 1,000 acre-feet of water annually.

(a) Harrison F. and Patricia E. Russell: Aspinall Unit, CRSP; Colorado: Contract for 1 acre-foot to support an augmentation plan, Case No. 97CW39, Water Division Court No. 4, State of Colorado, to provide for a single-family residential well, including home lawn and livestock watering (non-commercial).

(b) Walter Daniel Stephens: Aspinall Unit, CRSP; Colorado: Contract for 2 acre-feet to support an augmentation plan, Case No. 97CW49, Water Division Court No. 4, State of Colorado, to provide for pond evaporative depletions during the non-irrigation season.

(c) Larry Allen: Aspinall Unit, CRSP; Colorado: Contract for 1 acre-foot to support an augmentation plan, Case No. 01CW26, Water Division Court No. 4, State of Colorado, to provide for a single-family residential well, including home lawn and livestock watering (non-commercial).

(d) Karl Hipp: Aspinall Unit, CRSP; Colorado: Contract for 1 acre-foot to support an augmentation plan, Case No. 01CW27, Water Division Court No. 4, State of Colorado, to provide for a single-family residential well, including home lawn and livestock watering (non-commercial).

(e) Oliver Woods: Aspinall Unit, CRSP; Colorado: Contract for 1 acre-foot to support an augmentation plan, Case No. 01CW14, Water Division Court No. 4, State of Colorado, to provide for a single-family residential well, including home lawn and livestock watering (non-commercial).

2. Taos Area, San Juan-Chama Project, New Mexico: The Taos area Acequias and the Town and County of Taos are forming a joint powers agreement to form an organization to enter into a repayment contract for up to 2,990 acre-feet of project water to be used for irrigation and M&I in the Taos, New Mexico area.

3. Water Service Contractors, San Juan-Chama Project, New Mexico: Conversion of water service contracts to repayment contracts for the following entities: City of Santa Fe, County of Los Alamos, City of Espanola, Town of Taos, Village of Los Lunas, and Village of Taos Ski Valley.

4. Various Contractors, San Juan-Chama Project, New Mexico: Three potential contracts among the United States, Middle Rio Grande Conservancy District, and the City of Albuquerque to implement terms of Agreed Order Resolving Plaintiff's Motion for Preliminary Injunction, dated August 2, 2000, and the Supplement dated October 5, 2000.

5. Various Contractors, San Juan-Chama Project, New Mexico: The United States proposes to purchase lease water from various contractors to stabilize flows in a critical reach of the Rio Grande in order to meet the needs of irrigators and preserve habitat for the silvery minnow.

6. Provo River Water Users, Provo River Project, Utah: Contract to provide for repayment of reimbursable portion of construction costs of SOD modification to Deer Creek Dam.

7. Upper Gunnison River Water Conservancy District, Wayne N. Aspinall Unit, CRSP, Colorado: A long-term water service contract for up to 25,000 acre-feet for irrigation use.

8. Uncompahgre Valley Water Users Association, Upper Gunnison River Water Conservancy District, and Colorado River Water Conservation District; Uncompahgre Project, Colorado: Water management agreement for water stored at Taylor Park Reservoir and the Wayne N. Aspinall Storage Units to improve water management.

9. Southern Ute Indian Tribe, Florida Project, Colorado: Supplement to contract No. 14–06–400–3038, dated May 7, 1963, for an additional 181 acre-feet of project water, plus 563 acre-feet

of water pursuant to the 1986 Colorado Ute Indian Water Rights Final Settlement Agreement.

10. Grand Valley Water Users Association, Orchard Mesa ID, and Public Service Company of Colorado, Grand Valley Project, Colorado: Water service contract for the utilization of project water for cooling purposes for a steam electric generation plant.

11. Sanpete County Water Conservancy District, Narrows Project, Utah: Application for a SRPA loan and grant to construct a dam, reservoir, and pipeline to annually supply approximately 5,000 acre-feet of water through a transmountain diversion from upper Gooseberry Creek in the Price River drainage (Colorado River Basin) to the San Pitch—Savor River (Great Basin).

12. Individual irrigators, Carlsbad Project, New Mexico: The United States proposes to enter into long-term forbearance lease agreements with individuals who have privately held water rights to divert nonproject water either directly from the Pecos River or from shallow/artesian wells in the Pecos River Watershed. This action will result in additional water in the Pecos River to make up for the water depletions caused by changes in operations at Sumner Dam which were made to improve conditions for a threatened species, the Pecos bluntnose shiner.

13. Dolores Water Conservancy District, Dolores Project, Colorado: Amendment to an existing carriage contract to extend the term of the contract from 25 years to a total of 50 years.

14. Ogden River Water Users Association and Weber Basin Water Conservancy District, Ogden River and Weber Basin Projects, Utah: Contract to provide for repayment of water users portion of construction contract due to SOD investigations recommendations at Pineview Dam.

15. Mancos Water Conservancy District, Mancos Project, Colorado: Various carriage contracts with individual irrigators and the District to allow the carriage of up to 1,000 acre-feet of nonproject irrigation water in project facilities under the authority of Public Law 106–549 for the Mancos Project.

16. San Juan Water Commission, New Mexico, Animas-La Plata Project, Colorado and New Mexico: Cost sharing/repayment contract for up to 20,800 acre-feet per year of M&I water; contract terms to be consistent with the Colorado Ute Settlement Act Amendments of 2000 (Title III of Pub. L. 106–554).

17. La Plata Conservancy District, New Mexico, Animas-La Plata Project, Colorado and New Mexico: Cost-sharing/repayment contract for up to 1,560 acre-feet per year of M&I water; contract terms to be consistent with the Colorado Ute Settlement Act Amendments of 2000 (Title III of Pub. L. 106–554).

The following contract actions have been discontinued since the last publication of this notice on October 25, 2001.

1. (1)(b) City of Page Arizona, Glen Canyon Unit, CRSP, Arizona: Long-term contract for 1,000 acre-feet of water for municipal purposes.

2. (1)(c) LeChee Chapter of the Navajo Nation, Glen Canyon Unit, CRSP, Arizona: Long-term contract for 1,000 acre-feet of water for municipal purposes.

3. (10) Public Service Company of New Mexico, CRSP, Navajo Unit, New Mexico: New water service contract for a depletion of 16,200 acre-feet of project water for cooling purposes for a steam electric generation plant.

4. (21) State of Colorado, Animas-La Plata Project, Colorado and New Mexico: Cost-sharing/repayment contract for up to 10,460 acre-feet per year of M&I water; contract terms to be consistent with the Colorado Ute Settlement Act Amendments of 2000 (Title III of Public Law 106–554).

5. (22) Animas-La Plata Water Conservancy District, Colorado, Animas-La Plata Project, Colorado and New Mexico: Cost-sharing/repayment contract for up to 5,200 acre-feet per year of M&I water; contract terms to be consistent with the Colorado Ute Settlement Act Amendments of 2000 (Title III of Public Law 106–554).

The following contract action has been completed since the last publication of this notice on October 25, 2001.

1. (13) Dolores Water Conservancy District, Dolores Project, Colorado: Carriage contract with the District to carry up to 8,000 acre-feet of nonproject water in project facilities under the authority of the Warren Act of 1911. Contract was executed on October 19, 2001.

Great Plains Region: Bureau of Reclamation, PO Box 36900, Federal Building, 316 North 26th Street, Billings, Montana 59107–6900, telephone 406–247–7730.

1. Individual irrigators, M&I, and miscellaneous water users: Colorado, Kansas, Montana, Nebraska, North Dakota, Oklahoma, South Dakota, Texas, and Wyoming: Temporary (interim) water service contracts for the sale, conveyance, storage, and exchange of surplus project water and nonproject water for irrigation or M&I use to provide up to 10,000 acre-feet of water annually for a term up to 1 year.

2. Green Mountain Reservoir, Colorado-Big Thompson Project, Colorado: Water service contracts for irrigation and M&I; contracts for sale of water from the marketable yield to water users within the Colorado River Basin of western Colorado.

3. Ruedi Reservoir, Fryingpan-Arkansas Project, Colorado: Second round water sales from the regulatory capacity of Ruedi Reservoir. Water service and repayment contracts for up to 17,000 acre-feet annually for M&I use; contract with Colorado Water Conservation Board and the U.S. Fish and Wildlife Service for 10,825 acre-feet for endangered fishes.

4. Garrison Diversion Unit, P–SMBP, North Dakota: Renegotiation of the master repayment contract with Garrison Diversion Conservancy District to conform with the Garrison Diversion Unit Reformulation Act of 1986; negotiation of repayment contracts with irrigators and M&I users.

5. City of Rapid City, Rapid Valley Unit, P–SMBP, South Dakota: Contract renewal for storage capacity in Pactola Reservoir. A temporary (1 year not to exceed 10,000 AF) water service contract will be executed with the City of Rapid City, Rapid Valley Unit, for use of water from Pactola Reservoir. A long-term storage contract is being negotiated for water stored in Pactola Reservoir.

6. Pathfinder ID, North Platte Project, Nebraska: Negotiation of contract regarding SOD program modification of Lake Alice Dam No. 1 Filter/Drain.

7. Mid-Dakota Rural Water System, Inc., South Dakota: Pursuant to the Reclamation Projects Authorization and Adjustment Act of 1992, the Secretary of the Interior is authorized to make grants and loans to Mid-Dakota Rural Water System, Inc., a non-profit corporation for the planning and construction of a rural water supply system.

8. Angostura ID, Angostura Unit, P–SMBP, South Dakota: Another interim 3-year contract was executed on June 9, 2000, to provide for a continuing water supply and allow adequate time for completion of the Environmental Impact Statement for long-term contract renewal. A BON for a long-term contract renewal has been approved by the Commissioner's Office.

9. City of Berthoud, Colorado, Colorado-Big Thompson Project, Colorado: Long-term contract for conveyance of nonproject M&I water through Colorado-Big Thompson Project facilities.

10. Northwest Area Water Supply, North Dakota: Long-term contract for water supply from Garrison Diversion Unit facilities. The BON has been approved by the Commissioner. Negotiations are pending.

11. P–SMBP, Kansas: Existing water service contracts with the Kirwin and Webster IDs in the Solomon River Basin in Kansas were extended for a period of 4 years in accordance with Public Law 104–326. These contracts will be renewed prior to their expiration on December 31, 2003 (Kirwin ID), and December 31, 2005 (Webster ID). Reclamation has prepared a draft environmental assessment (DEA) for the conversion of long-term water service contracts to repayment contracts. On December 10, 2001, the DEA became available for a 30-day review and comment period. Public comments will be accepted until January 9, 2002. Written comments should be directed to Jill Manring, Team Leader, Bureau of Reclamation, PO Box 1607, Grand Island, NE 68802.

12. City of Cheyenne, Kendrick Project, Wyoming: Negotiation of a contract to renew for an additional term of 5 years. Contract for up to 10,000 acre-feet of storage space for replacement water on a yearly basis in Seminoe Reservoir. A temporary contract has been issued pending negotiation of the long-term contract.

13. Highland-Hanover ID, P–SMBP, Hanover-Bluff Unit, Wyoming: Renegotiation of long-term water service contract; includes provisions for repayment of construction costs.

14. Upper Bluff ID, P–SMBP, Hanover-Bluff Unit, Wyoming: Renegotiation of long-term water service contract; includes provisions for repayment of construction cost.

15. Fort Clark ID, P–SMBP, North Dakota: Negotiation of water service contract to continue delivery of project water to the District.

16. Western Heart River ID, P–SMBP, Heart Butte Unit, North Dakota: Negotiation of water service contract to continue delivery of project water to the District.

17. Lower Marias Unit, P–SMBP, Montana: Water service contract expired in July 1998. Initiating long-term contract for the use of up to 600 acre-feet of storage water from Tiber Reservoir to irrigate 220 acres. Temporary/interim contracts are being issued to allow continued delivery of water and the time necessary to complete required actions for the long-term contract process.

18. Lower Marias Unit, P–SMBP, Montana: Initiating renewal of long-term water service contract for the use of up to 750 acre-feet of storage water from Tiber Reservoir to irrigate 250 acres. Temporary/interim contracts are being issued to allow continued delivery of water and the time necessary to complete required actions for the long-term contract process.

19. Lower Marias Unit, P–SMBP, Montana: Water service contract expired May 1998. Initiating long-term contract for the use of up to 6,855 acre-feet of storage water from Tiber Reservoir to irrigate 2,285 acres. Temporary/interim contracts are being issued to allow continued delivery of water and the time necessary to complete required actions for the long-term contract process.

20. Dickinson-Heart River Mutual Aid Corporation, P–SMBP, Dickinson Unit, North Dakota: Negotiate renewal of water service contract for irrigation of lands below Dickinson Dam in western North Dakota.

21. Savage ID, P–SMBP, Montana: The District is currently seeking title transfer. The contract is subject to renewal on an annual basis pending outcome of the title transfer process. Interim contracts are being issued to allow continued delivery of water. The District has requested information concerning renewal of the long-term contract.

22. City of Fort Collins, Colorado-Big Thompson Project, Colorado: Long-term contracts for conveyance and storage of nonproject M&I water through Colorado-Big Thompson Project facilities.

23. Standing Rock Sioux Tribe, P–SMBP, North Dakota: Negotiate a long-term water service contract with the Standing Rock Sioux Tribe in North Dakota for irrigation of up to 2,380 acres of land within the reservation.

24. Glendo Unit, P–SMBP, Wyoming: Contract renewal for long-term water service contracts with Burbank Ditch, New Grattan Ditch Company, Torrington ID, Lucerne Canal and Power Company, and Wright and Murphy Ditch Company.

25. Glendo Unit, P–SMBP, Nebraska: Contract renewal for long-term water service contracts with Bridgeport, Enterprise, and Mitchell IDs, and Central Nebraska Public Power and ID.

26. Belle Fourche ID, Belle Fourche Project, South Dakota: Belle Fourche ID has requested a $25,000 reduction in construction repayment. Negotiations are pending resolution of contract language.

27. Helena Valley Unit, P–SMBP, Montana: Initiating negotiations for renewal of Part A of the A/B contract with Helena Valley ID which expires in 2004.

28. Crow Creek Unit, P–SMBP, Montana: Initiating negotiations for renewal of Part A of the A/B contract with Toston ID which expires in 2004.

29. Louis F. Polk, Jr. (Individual), Shoshone Project, Buffalo Bill Dam, Wyoming: Renewal of exchange water service contract not to exceed 500 acre-feet of water to service 249 acres.

30. Milk River Project, Montana: City of Harlem water service contract expires July of 2002. Initiating negotiation for renewal of a water service contract for an annual supply of raw water for domestic use from the Milk River not to exceed 500 acre-feet. An interim contract may be issued to continue delivery of water until the necessary actions can be completed to renew the long-term contract.

31. Lower Marias Unit, P–SMBP, Montana: City of Chester water service contract expires December of 2002. Initiating negotiation for renewal of a long-term water service contract for an annual supply of raw water for domestic use from Tiber Reservoir not to exceed 500 acre-feet. An interim contract may be issued to continue delivery of water until the necessary actions can be completed to renew the long-term contract.

32. City of Dickinson, P–SMBP, Dickinson Unit, North Dakota: Negotiate a long-term water service contract with the City of Dickinson or Park Board, for minor amounts of water from Dickinson Dam.

33. Clark Canyon Water Supply Company, East Bench Unit, Montana: Initiating renewal of contract No. 14–06–600–3592 which expires December 31, 2005.

34. East Bench ID, East Bench Unit, Montana: Initiating renewal of contract No. 14–06–600–3593 which expires December 31, 2005.

35. Pueblo Board of Water Works, Fryingpan-Arkansas Project, Colorado: Water conveyance contract expires in October of 2002. Initiating negotiation for renewal of a water conveyance contract for annual conveyance of up to 750 acre-feet of nonproject water through the Nast and Boustead Tunnel System.

36. City of Dickinson, P–SMBP, North Dakota: In accordance with Public Law 106–566, a BON has been prepared to amend contract No. 9–07–60–W0384 which will allow the City to pay a lump-sum payment in lieu of its remaining repayment obligation for construction costs associated with the bascule gate. The BON has been approved by the Commissioner.

37. Lower Marias Unit, P–SMBP, Montana: Initiating long-term water service contract for up to 910 acre-feet

of storage from Tiber Reservoir to irrigate 303.2 acres. Temporary/interim contracts are being issued to allow continued delivery of water and the time necessary to complete required actions for the long-term contract process.

38. Tom Green County Water Control and Improvement District No. 1, San Angelo Project, Texas: The District has requested deferment of its 2002 repayment obligation. A BON has been prepared to amend contract No. 14–06–500–369.

39. La Feria ID, Lower Rio Grande Rehabilitation Project, LaFeria Division, Texas: The District has repaid the repayment obligation and title to all project works, lands, or interests in lands originally conveyed by the District to the United States shall now be transferred back to the District in accordance with the authorizing legislation, Public Law 86–357 dated September 22, 1959, and the contract shall be terminated.

40. Northern Colorado Water Conservancy District, Colorado-Big Thompson Project, Colorado: Acting by and through the Pleasant Valley Pipeline Project Water Activity Enterprise, beginning discussions and draft BON for a long-term contract for conveyance of nonproject water through Colorado-Big Thompson Project facilities.

Dated: January 4, 2002.

Elizabeth Cordova-Harrison,

Deputy Director, Office of Policy.

[FR Doc. 02–2316 Filed 1–30–02; 8:45 am]

BILLING CODE 4310–MN–P

INTERNATIONAL TRADE COMMISSION

[Investigation No. 731–TA–917 (Final)]

Stainless Steel Bar From Taiwan

AGENCY: United States International Trade Commission.

ACTION: Termination of investigation.

SUMMARY: On January 23, 2002, the Department of Commerce published notice in the **Federal Register** (67 FR 3152) of a negative final determination of sales at less than fair value in connection with the subject investigation. Accordingly, pursuant to § 207.40(a) of the Commission's Rules of Practice and Procedure (19 CFR 207.40(a)), the antidumping investigation concerning stainless steel bar from Taiwan (investigation No. 731–TA–917 (Final)) is terminated.

EFFECTIVE DATE: January 23, 2002.

FOR FURTHER INFORMATION CONTACT: Larry Reavis (202–205–3185), Office of Investigations, U.S. International Trade Commission, 500 E Street SW., Washington, DC 20436. Hearing-impaired individuals are advised that information on this matter can be obtained by contacting the Commission's TDD terminal on 202–205–1810. Persons with mobility impairments who will need special assistance in gaining access to the Commission should contact the Office of the Secretary at 202–205–2000. General information concerning the Commission may also be obtained by accessing its Internet server, *http://www.usitc.gov*. The public record for this investigation may be viewed on the Commission's electronic docket (EDIS-ON-LINE) at *http://dockets.usitc.gov/eol/public*.

Authority: This investigation is being terminated under authority of title VII of the Tariff Act of 1930; this notice is published pursuant to section 201.10 of the Commission's rules (19 CFR 201.10).

By order of the Commission.

Issued: January 25, 2002.

Marilyn R. Abbott,

Acting Secretary.

[FR Doc. 02–2304 Filed 1–30–02; 8:45 am]

BILLING CODE 7020–02–P

DEPARTMENT OF JUSTICE

Immigration and Naturalization Service

Agency Information Collection Activities: Proposed Collection; Comments Requested

ACTION: 30-Day notice of collection under review: Extension of request for the return of original document(s).

The Department of Justice (DOJ), Immigration and Naturalization Service has submitted the following information collection request to the Office of Management and Budget (OMB) for review and approval in accordance with the Paperwork Reduction Act of 1995. The proposed information collection is published to obtain comments from the public and affected agencies. This proposed information collection was previously published in the **Federal Register** (Volume 66, Number 159, page 43029) on 08/16/01, allowing for a 60-day comment period.

The purpose of this notice is to allow for an additional 30 days for public comment until March 4, 2002. This process is conducted in accordance with 5 CFR 1320.10. Written comments and/or suggestions regarding the items contained in this notice, especially the estimated public burden and associated response time, should be directed to The Office of Management and Budget, Office of Information and Regulatory Affairs, Attention Department of Justice Desk Officer, 725–17th Street, NW., Suite 10102, Washington, DC 20503. Additionally, comments may be submitted to OMB via facsimile to (202)–395–5806.

Written comments and suggestions from the public and affected agencies concerning the proposed collection of information are encouraged. Your comments should address one or more of the following four points:

(1) Evaluate whether the proposed collection of information is necessary for the proper performance of the functions of the agency, including whether the information will have practical utility;

(2) Evaluate the accuracy of the agencies estimate of the burden of the proposed collection of information, including the validity of the methodology and assumptions used;

(3) Enhance the quality, utility, and clarity of the information to be collected; and

(4) Minimize the burden of the collection of information on those who are to respond, including through the use of appropriate automated, electronic, mechanical, or other technological collection techniques or other forms of information technology, e.g., permitting electronic submission of responses.

Overview of This Information Collection

(1) *Type of Information Collection:* Extension.

(2) *Type of the Form/Collection:* Request for the Return of Original Document(s).

(3) *Agency form number, if any, and the applicable component of the Department of Justice sponsoring the collection:* Form G–884, Immigration and Naturalization Service, Department of Justice.

(4) *Affected public who will be asked or required to respond, as well as a brief abstract:* Individuals or households.

(5) *An estimate of the total number of respondents and the amount of time estimated for an average respondent to respond:* There are 2,500 respondents. The amount of estimated time required for the average respondent to respond is: 15 minutes (.25 hours).

(6) *An estimate of the total public burden (in hours) associated with the collection:* 625 hours annually.

If you have additional comments, suggestions, or need a copy of the proposed information collection

instrument with instructions, or additional information, please contact Richard A. Sloan, Director, Policy Directives and Instructions Branch, Immigration and Naturalization Service, U.S. Department of Justice, 425 I Street, NW., Room 4034, Washington, DC 20536; (202) 514–3291. Comments and suggestions regarding items contained in this notice, especially regarding the estimated public burden and associated response time may also be directed to Richard A. Sloan.

If additional information is required contact: Robert B. Briggs, Department Clearance Officer, Information Management and Security Staff, Justice Management Division, United States Department of Justice, 601 D Street NW., Patrick Henry Building, Suite 1600, NW., Washington, DC 20530.

Dated: January 25, 2002.

Richard A. Sloan,

Department Clearance Officer, Department of Justice, Immigration and Naturalization Service.

[FR Doc. 02–2350 Filed 1–30–02; 8:45 am]

BILLING CODE 4410–10–M

DEPARTMENT OF JUSTICE

Immigration and Naturalization Service

Agency Information Collection Activities: Proposed Collection; Comment Request

ACTION: Notice of information collection under review: Contacts Concerning Project Speak Out!

The Department of Justice, Immigration and Naturalization Service (INS) has submitted the following information collection request to the Office of Management and Budget (OMB) for review and clearance in accordance with the Paperwork Reduction Act of 1995. The information collection was previously published in the **Federal Register** on November 15, 2001 at 66 FR 57486, allowing for a 60-day public comment period. No public comment was received on this information collection.

The purpose of this notice is to allow an additional 30 days for public comments. Comments are encouraged and will be accepted until March 4, 2002. This process is conducted in accordance with 5 CFR 1320.10.

Written comments and/or suggestions regarding the items contained in this notice, especially regarding the estimated public burden and associated response time, should be directed to the Office of Management and Budget, Office of Information and Regulatory Affairs, Attention: Department of Justice Desk Officer, 725—17th Street, NW., Room 10235, Washington, DC 20530.

Written comments and suggestions from the public and affected agencies concerning the proposed collection of information should address one or more of the following four points:

(1) Evaluate whether the proposed collection of information is necessary for the proper performance of the functions of the agency, including whether the information will have practical utility;

(2) Evaluate the accuracy of the agency's estimate of the burden of the proposed collection of information, including the validity of the methodology and assumptions used;

(3) Enhance the quality, utility, and clarity of the information to be collected; and

(4) Minimize the burden of the collection of information on those who are to respond, including through the use of appropriate automated, electronic, mechanical, or other technological collection techniques or other forms of information technology, e.g., permitting electronic submission of responses.

Overview of this information collection:

(1) *Type of Information Collection:* New information collection.

(2) *Title of the Form/Collection:* Contacts Concerning Project Speak Out!

(3) *Agency form number, if any, and the applicable component of the Department of Justice sponsoring the collection:* Form G–1046, Office of Policy and Planning, Immigration and Naturalization Service.

(4) *Affected public who will be asked or required to respond, as well as a brief abstract:* Primary: Individuals or Households. This form provides a standardized way of recording the number of individuals contacting the Community Based Organizations concerning the practitioner fraud pilot program. The INS will use the information collected on the form to determine how many persons are served by the program and if its public outreach efforts are successful.

(5) *An estimate of the total number of respondents and the amount of time estimated for an average respondent to respond:* 60,000 responses at 52 minutes (0.866 hours) per response.

(6) *An estimate of the total public burden (in hours) associated with the collection:* 51,960 annual burden hours.

If you have additional comments, suggestions, or need a copy of the proposed information collection instrument with instructions, or additional information, please contact Richard A. Sloan 202–514–3291, Director, Policy Directives and Instructions Branch, Immigration and Naturalization Service, U.S. Department of Justice, 425 I Street, NW., Room 4034, Washington, DC 20536. Additionally, comments and/or suggestions regarding the item(s) contained in this notice, especially regarding the estimated public burden and associated response time may also be directed to Mr. Richard Sloan.

If additional information is required contact: Mr. Robert B. Briggs, Clearance Officer, United States Department of Justice, Information Management and Security Staff, Justice Management Division, Patrick Henry Building, 601 D Street, NW., Suite 1600, Washington, DC 20530.

Dated: January 25, 2002.

Richard A. Sloan,

Department Clearance Officer, Immigration and Naturalization Service, Department of Justice.

[FR Doc. 02–2351 Filed 1–30–02; 8:45 am]

BILLING CODE 4410–10–M

DEPARTMENT OF LABOR

Office of the Assistant Secretary for Administration and Management

Agency Information Collection Activities: Proposed Collection; Comment Request; Applicant Background Questionnaire

AGENCY: Office of the Assistant Secretary for Administration and Management (OASAM), Department of Labor.

ACTION: Notice.

SUMMARY: The Department of Labor, as part of its continuing effort to reduce paperwork and respondent burden conducts a preclearance consultation program to provide the general public and Federal agencies with an opportunity to comment on proposed and/or continuing collection of information in accordance with the Paperwork Reduction Act of 1995 (PRA95) [44 U.S.C. 3506(c)(2)(A)]. This program helps to ensure that requested data can be provided in the desired format, reporting burden (time and financial resources) is minimized, collection requirements are clearly understood, and the impact of collection requirements on respondents can be properly assessed. Currently, the Department of Labor is soliciting comments concerning the proposed extension of the ''Applicant Background Questionnaire''.

A copy of the proposed information collection request (ICR) can be obtained by contacting the office listed above in the **ADDRESSES** section of this notice.

DATES: Written comments must be submitted to the office listed in the **ADDRESSES** section below on or before April 1, 2002.

ADDRESSES: Anderson Glasgow, U.S. Department of Labor, Human Resource Policy and Accountability Center, 200 Constitution Ave. NW., Room N–5470, Washington, DC 20210; Phone: (202) 693–7738; Written comments limited to 10 pages or fewer may also be transmitted by facsimile to: (202) 693–7631; Internet; *glasgow-william@dol.gov.*

SUPPLEMENTARY INFORMATION:

I. Background

The Department of Labor, as part of its obligation to provide equal employment opportunities, is charged with ensuring that qualified individuals in groups that are underrepresented in various occupations, are included in applicant pools for the Department's positions. See 5 U.S.C. 7201(c); 29 U.S.C. 791; 29 U.S.C. 2000e–16; 5 CFR 720.204; 29 CFR 1614.101(a). To achieve this goal, DOL employment offices have conducted targeted outreach to a variety of sources, including educational institutions, professional organizations, newspapers and magazines. DOL has also participated in career fairs and conferences that reach high concentrations of Hispanics, African Americans, Native Americans, Asians, and persons with disabilities.

Without the data provided by this collection, DOL does not have the ability to evaluate the effectiveness of any of these targeted recruiting strategies because collection of racial and national origin information only occurs at the point of hiring. DOL needs to collect data on the pools of applicants which result from the various targeted recruitment strategies listed above. After the certification and selection process has been completed, it is necessary to cross-reference the data collected with the outcome of the qualifications review in order to evaluate the quality of applicants from various recruitment sources. With the information from this collection, DOL can adjust and redirect its targeted recruitment to achieve the best result. DOL will also be able to respond to requests for information received from the Office of Personnel Management (OPM) in the course of OPM's evaluation and oversight activities.

II. Desired Focus of the Comments

The Department of Labor is particularly interested in comments which:

- Evaluate whether the proposed collection of information is necessary for the proper performance of the functions of the agency, including whether the information will have practical utility;
- Enhance the quality, utility, and clarity of the information to be collected; and
- Evaluate the accuracy of the agency's estimate of the burden of the proposed collection of information, including the validity of the methodology and assumptions used;
- Minimize the burden of the collection of information on those who are to respond, including through the use of appropriate automated, electronic, mechanical, or other technological collection techniques or other forms of information technology, e.g., permitting electronic submissions of responses.

III. Current Actions

This notice requests an extension of the current Office of Management and Budget approval of the Applicant Background Questionnaire. Extension is necessary to continue to evaluate the effectiveness of agency recruitment programs in attracting applicants from underrepresented sectors of the population.

Type of Review: Extension of a currently approved collection Agency: U.S. Department of Labor, Office of the Assistant Secretary for Administration and Management.

Title: Applicant Background Questionnaire.

OMB Number: 1225–0072.

Affected Public: Applicants for positions recruited in the Department of Labor.

Total Respondents: 3,000.

Frequency: one time per respondent.

Total Responses: 3,000.

Average Time per Response: 5 minutes.

Estimated Total Burden Hours: 250 hours.

Total Burden Cost (capital/startup): $0.

Total Burden Cost (operating/maintaining): $0.

Comments submitted in response to this notice will be summarized and/or included in the request for Office of Management and Budget approval of the information collection request; they will also become a matter of public record.

Dated: January 18, 2002.

Tali R. Stepp,

Director of Human Resources.

[FR Doc. 02–2322 Filed 1–30–02; 8:45 am]

BILLING CODE 4510–23–M

DEPARTMENT OF LABOR

Employment and Training Administration

[TA–W–39,449A and NAFTA–04955A and TA–W–39,437A and NAFTA–04954]

Agere Systems Optoelectronics Division, Reading and Breinigsville, PA; Notice of Negative Determination Regarding Application for Reconsideration

By application of October 5, 2001 and October 8, 2001, the International Brotherhood of Electrical Workers, Local 1560 and the International Brotherhood of Electrical Workers, Local 1898, respectively requested administrative reconsideration of the Department's negative determination regarding eligibility for workers and former workers of the subject firm to apply for Trade Adjustment Assistance (TAA) under petition TA–W–39,449A and North American Free Trade Agreement-Transitional Adjustment Assistance (NAFTA–TAA) under petition NAFTA–4955A and Trade Adjustment Assistance (TAA) under petition TA–W–39,437A and North American Free Trade Agreement-Transitional Adjustment Assistance (NAFTA–TAA) under petition NAFTA–4954, respectively. The denial notices applicable to workers of Agere Systems, Optoelectronics Division, Breinigsville, Pennsylvania, were signed on August 29, 2001 (TA–W–4937A and TA–W–39,449A), and August 23, 2001 (NAFTA–4955A and NAFTA–4954) and published in the **Federal Register** on September 11, 2001 (66 FR 47241) and (66 FR 47243), respectively.

Pursuant to 29 CFR 90.18(c) reconsideration may be granted under the following circumstances:

(1) If it appears on the basis of facts not previously considered that the determination complained of was erroneous;

(2) if it appears that the determination complained of was based on a mistake in the determination of facts not previously considered; or

(3) if in the opinion of the Certifying Officer, a misinterpretation of facts or of the law justified reconsideration of the decision.

The TAA petitions, filed on behalf of workers at Agere Systems, Optoelectronics Division, Breinigsville,

Pennsylvania, and Agere Systems, Optoelectronics Division, Reading, Pennsylvania producing optoelectronics, were denied because the ''contributed importantly'' group eligibility requirement of section 222(3) of the Trade Act of 1974, as amended, was not met. The ''contributed importantly'' test is generally demonstrated through a survey of the workers' firm's customers. The survey revealed no increased customer imports of optoelectronics during the relevant period. The investigation further revealed that imports of optoelectronics by the company were negligible.

The NAFTA–TAA petitions for the same worker groups were denied because criteria (3) and (4) of the group eligibility requirements in paragraph (a)(1) of section 250 of the Trade Act, as amended, were not met. A survey was conducted and revealed that customers did not increase their imports of optoelectronics from Mexico or Canada during the relevant period. The subject firm did not import optoelectronics from Mexico or Canada, nor was production of optoelectronics shifted from the workers' firm to Mexico or Canada.

The petitioners allege that plant production is being shifted to Asia and Mexico and that the products will be imported back to the United States.

The petitioners supplied information concerning the company's manufacturing strategy concerning the transfer of plant production to Asia, in conjunction with various other factors that are scheduled to occur. The planned transfer and potential imports are beyond the relevant period of the initial investigation and thus could not be considered during the investigation.

The petitioners further allege that certain products produced by the subject plant were being outsourced to Canada and/or Mexico.

Based on data supplied by the company, only negligible amounts of products produced by the subject plant were being outsourced to foreign sources.

The petitioners also indicated that some modulators, similar to those produced by the subject plant, are scheduled to be made in Singapore.

The shift in production to Singapore does not meet the ''contributed importantly'' test unless the product was imported back to the United States during the investigation period.

The majority of the information recently provided by the petitioners concerns a time period following the initial decision. The petitioner with their request for reconsideration, attached new TAA and NAFTA–TAA petitions for the Breiningsville, Pennsylvania plant. Those petitions will be instituted shortly. The Department based on the information provided during reconsideration is also initiating new TAA and NAFTA–TAA investigations for the Reading, Pennsylvania location.

Conclusion

After review of the application and investigative findings, I conclude that there has been no error or misinterpretation of the law or of the facts which would justify reconsideration of the Department of Labor's prior decisions. Accordingly, the application is denied.

Signed at Washington, DC, this 15th day of January, 2002.

Edward A. Tomchick,

Director, Division of Trade Adjustment Assistance.

[FR Doc. 02–2341 Filed 1–30–02; 8:45 am]

BILLING CODE 4510–30–M

DEPARTMENT OF LABOR

Employment and Training Administration

[TA–W–38,893 and NAFTA–04613]

The Budd Company Stamping and Frame Division Philadelphia, PA; Notice of Negative Determination of Reconsideration

On November 30, 2001, the Department issued an Affirmative Determination Regarding Application for Reconsideration for the workers and former workers of the subject firm. The notice was published in the **Federal Register** on December 26, 2001 (66 FR 66467).

The Department initially denied TAA to workers of The Budd Company, Stamping and Frame Division, Philadelphia, Pennsylvania because the ''contributed importantly'' group eligibility requirement of section 222(3) of the Trade Act of 1974, as amended, was not met. None of the respondents increased their import purchases of automotive stampings and assemblies, while reducing their purchases from the subject firm.

The Department denied NAFTA–TAA because the ''contributed importantly'' group eligibility requirement of section 250 was not met and because there was no shift in production to either Mexico or Canada. None of the customers increased their import purchases of automotive stampings and assemblies from Canada or Mexico, while reducing their purchases from the subject firm during the relevant period.

The workers at the subject firm were engaged in employment related to the production of automotive stampings and assemblies.

The petitioner indicated that the subject firm opened a new stamping plant in Silao, Mexico during the fall of 2000. The petitioner further stated that the opening of the Mexican plant resulted in a significant shift in plant production to Mexico.

On reconsideration, the Department contacted the company for an explanation of the alleged shift in plant production to Mexico. The company indicated that no work performed at The Budd Company, Stamping and Frame Division, Philadelphia, Pennsylvania was shifted to their joint venture facility located in Mexico. The company further indicated that they did not import products like and directly competitive with what the subject plant produced back to the United States during the relevant period.

Conclusion

After reconsideration, I affirm the original notice of negative determinations regarding eligibility to apply for worker adjustment assistance and NAFTA-Transitional Adjustment Assistance for workers and former workers of The Budd Company. Stamping and Frame Division, Philadelphia, Pennsylvania.

Dated: Signed at Washington, DC, this 2nd day of January 2002.

Edward A. Tomchick,

Director, Division of Trade Adjustment Assistance.

[FR Doc. 02–2335 Filed 1–30–02; 8:45 am]

BILLING CODE 4510–30–M

DEPARTMENT OF LABOR

Employment and Training Administration

[TA–W–38,424 and NAFTA–4441]

Georgia Pacific Chip and Saw Plant, Baileyville, ME; Notice of Revised Determination on Reconsideration

By letter dated April 12, 2001, the Paper, Allied-Industrial, Chemical and Energy Workers International Union, Local 1–1367 (PACE), requested administrative reconsideration of the Department's denial of TAA and NAFTA–TAA for workers of the subject firm. Workers at Georgia Pacific Corporation, Chip-and-Saw, Baileyville, Maine, are engaged in the production of softwood dimensional lumber.

On March 14, 2001 and March 13, 2001, the Department of Labor issued Negative Determination Regarding Eligibility to apply for Trade Adjustment Assistance (TAA) and NAFTA–Transitional Adjustment Assistance (NAFTA–TAA), respectively, applicable to workers and former workers of the subject firm. The TAA and NAFTA–TAA decisions were published in the Federal Register on April 16, 2001 (66 FR 19520) and (66 FR 169522), respectively.

The TAA petition was denied because the ''contributed importantly'' group eligibility requirement of section 222(3) of the Trade Act of 1974, as amended, was not met. The ''contributed importantly'' test is generally demonstrated through a survey of the workers' firm's customers. The investigation revealed that none of the subject firm customers reported increased import purchases of softwood lumber (dimensional).

The NAFTA–TAA petition for the same worker group was denied because criteria (3) and (4) of the group eligibility requirements in paragraph (a)(1) of section 250 of the Trade Act, as amended, were not met. There was no shift of production from the subject firm to Canada or Mexico, nor did the company import softwood lumber from Canada or Mexico. The Department conducted a survey of major customers of the subject firm regarding purchases of softwood lumber (dimensional). The survey revealed that the customers did not significantly increase import purchases of softwood lumber from Canada or Mexico.

In the request for reconsideration, PACE asserts that there was a contradiction in the TAA and NAFTA–TAA decisions, inasmuch as in the TAA petition denial, the finding that import purchases by the subject company of softwood dimensional lumber declined during the relevant time periods, while the NAFTA–TAA petition denial found the subject firm does not import softwood lumber.

The Department concurs with the PACE on this issue. On reconsideration, the Department conducted further import analysis. The analysis revealed that Georgia Pacific maintained a reliance on imports of softwood lumber from Canada and other sources, while reducing production and employment at the Chip and Saw Plant located in Baileyville, Maine.

From 1999 to 2000, U.S. imports of softwood lumber from Canada increased absolutely and relative to domestic production and consumption.

Conclusion

After careful review of the application and investigative findings on reconsideration, I conclude that increased imports, including those from Canada of articles like or directly competitive with softwood lumber, contributed importantly to the decline in sales or production and to the total or partial separation of workers of the subject firm. In accordance with the provisions of the Trade Act, I make the following certification:

All workers of Georgia Pacific, Chip and Saw Plant, Baileyville, Maine, engaged in employment related to the production of softwood lumber, who became totally or partially separated from employment on or after December 2, 1999, through two years from issuance of the revised determination, are eligible to apply for adjustment assistance under section 223 of the Trade Act of 1974; and

All workers of Georgia Pacific, Chip and Saw Plant, Baileyville, Maine, engaged in employment related to the production of softwood lumber, who became totally or partially separated from employment on or after January 2, 2000, through two years from the issuance of this revised determination, are eligible to apply for NAFTA–TAA under section 250 of the Trade Act of 1974.

Signed in Washington, DC, this 9th day of January 2002.

Edward A. Tomchick,

Director, Division of Trade Adjustment Assistance.

[FR Doc. 02–2344 Filed 1–30–02; 8:45 am]

BILLING CODE 4510–30–M

DEPARTMENT OF LABOR

Employment and Training Administration

Notice of Determinations Regarding Eligibility To Apply for Worker Adjustment Assistance and NAFTA Transitional Adjustment Assistance

In accordance with Section 223 of the Trade Act of 1974, as amended, the Department of Labor herein presents summaries of determinations regarding eligibility to apply for trade adjustment assistance for workers (TA–W) issued during the period of January, 2002.

In order for an affirmative determination to be made and a certification of eligibility to apply for worker adjustment assistance to be issued, each of the group eligibility requirements of Section 222 of the Act must be met.

(1) that a significant number or proportion of the workers in the workers' firm, or an appropriate subdivision thereof, have become totally or partially separated,

(2) that sales or production, or both, of the firm or subdivision have decreased absolutely, and

(3) that increases of imports of imports of articles like or directly competitive with articles produced by the firm or appropriate subdivision have contributed importantly to the separations, or threat thereof, and to the absolute decline in sales or production.

Negative Determinations for worker Adjustment Assistance

In each of the following cases the investigation revealed that criterion (3) has not been met. A survey of customers indicated that increased imports did not contribute importantly to worker separations at the firm.

TA–W–40,358; Pennsylvania Tool and Gages, Inc., Meadville, PA

TA–W–39,522; JLG Industries, Inc., Bedford, PA

TA–W–39,302; Honeywell Aircraft Landing Systems, South Bend, IN

TA–W–40,564; Texfi Industries, New York, NY

TA–W–40,314 & A; Trout Lake Farm LLC, Trout Lake, WA and Moses Lake, WA

TA–W–40,451; Modern Prototype, Troy, MI

TA–W–39,907; Alcoa Fujikura Ltd, Optical Fiber Systems, Houston, TX

In the following cases, the investigation revealed that the criteria for eligibility have not been met for the reasons specified.

Increased imports did not contribute importantly to worker separations at the firm.

TA–W–39,056; Peerless Pattern Works, Portland, OR

TA–W–39,433; The Penn Companies, St. Peters, MO

TA–W–40,071; PTC Alliance, Darlington, OH

TA–W–40,275; Tyco Electronics, Fiber Optics Div., Glen Rock, PA

TA–W–40,435; Telaxis Communications, South Deerfield, MA

The workers firm does not produce an article as required for certification under Section 222 of the Trade Act of 1974.

TA–W–40,560; DataMark, Inc., El Paso, TX

TA–W–40,479; Gate Gourmet International, Unit 498, Charlotte, NC

TA–W–40,441; Road Machinery Co., Bayard, NM

TA–W–40,562; Lake Superior and Ishpiming Railroad Co., Marquette, MI

TA–W–39,919; Antec/Keptel, Tinton Falls, NJ

Affirmative Determinations for Worker Adjustment Assistance

The following certifications have been issued; the date following the company name and location of each determination references the impact date for all workers of such determination.

TA–W–40,125; Arrow/SI, Winsted, CT: September 13, 2000.
TA–W–40,123; Crown Pacific Limited Partnership, Coeur D'Alene, ID: August 30, 2000.
TA–W–40,028; Story and Clark Piano Co., A Div. of QRS Music Rolls, Seneca, PA: August 30, 2000.
TA–W–39,939; Willamette Industries, Inc., Korpine Particleboard Div., Bend, OR: August 17, 2000.
TA–W–39,539; Mission Valley Fabrics, New Braunfels, TX: June 14, 2000.
TA–W–39,191; NVN Corp., Clifton, NJ: April 3, 2000.
TA–W–40,258; Superior Uniform Service Group, Inc., McGehee Industries, McGehee, AR: October 2, 2000.
TA–W–40,249; Liebert Corp., Irvine California Operations, Irvine, CA: September 27, 2000.
TA–W–40,243; Paulson Wire Rope Corp., Sunbury, PA: October 4, 2000.
TA–W–40,225; Atotech USA, State College, PA: October 4, 2000.
TA–W–40,198; Scion Valley, Inc., Meridian, TX: September 27, 2000.
TA–W–40,078; Guilford Mills, Pine Grove, PA: September 10, 2000.
TA–W–40,276; Dorel Juvenile Group, Inc., Formerly Cosco, Inc., Ft. Smith, AR: October 8, 2000.
TA–W–39,964 & A; NACCO Industries, Inc., Materials Handling Group, Assembly Building, Danville, IL and Parts Distribution Center, Danville, IL: June 26, 2000.
TA–W–40,520 & A; Hoskins Manufacturing Co., Mio, MI and Lewiston, MI: November 27, 2000.
TA–W–40,510; Applied Concepts, Inc., Warrendale, PA: November 14, 2000.
TA–W–40,491 & A; Wesley Industries, Inc., Bloomfield Hills, MI and New Haven Foundry, New Haven, MI: November 20, 2000.
TA–W–40,408; Carrier Corp., Conway Refrigeration Operations, Conway, AR: October 19, 2000.
TA–W–40,393; Stylemaster Apparel, Inc., Union, MO: November 27, 2000.
TA–W–40,329; D. K. Mold and Engineering, Inc., Wyoming, MI: October 23, 2000.
TA–W–39,356; Kendall Healthcare, Chatsworth, CA: May 16, 2000.
TA–W–39,584; Laco Sportswear, Inc., Chattanooga, TN: June 25, 2000.
TA–W–39,670 & A; Lamb-Grays Harbor Co., Hoquiam, WA and Meridian, MS: July 9, 2000.
TA–W–40,099; Shasta Paper Co., Anderson, CA: September 4, 2000.
TA–W–40,178; Corning Cable Systems, Optical Assemblies Plant, Hickory, NC: September 20, 2000.
TA–W–40,180; Skinner Engine Co., Erie, PA: September 27, 2000.
TA–W–40,261; Capitol Manufacturing, Harsco Corp. Gas and Fluid Control Group, Lansing, OH: October 4, 2000.
TA–W–40,404; Fender Musical Instruments, Westerly. RI: November 27, 2000.
TA–W–40,420 & A; International Wire Group, Inc., Bare Wire Div., Plant #4, Pine Bluff, AR and Shunt Plant, Pine Bluff, AR: October 19, 2000.
TA–W–40,462; Vishay Vitramon, Roanoke, VA: December 12, 2000.
TA–W–40,466; Precision Cable Assemblies, Logansport, IN: December 14, 2000.
TA–W–40,532; Rich Products Manufacturing Corp., Appleton Div., Appleton, WI: November 1, 2000.

Also, pursuant to Title V of the North American Free Trade Agreement Implementation Act (P.L. 103–182) concerning transitional adjustment assistance hereinafter called (NAFTA–TAA) and in accordance with Section 250(a), Subchapter D, Chapter 2, Title II, of the Trade Act as amended, the Department of Labor presents summaries of determinations regarding eligibility to apply for NAFTA–TAA issued during the month of January, 2002.

In order for an affirmative determination to be made and a certification of eligibility to apply for NAFTA–TAA the following group eligibility requirements of Section 250 of the Trade Act must be met:

(1) that a significant number or proportion of the workers in the workers' firm, or an appropriate subdivision thereof, (including workers in any agricultural firm or appropriate subdivision thereof) have become totally or partially separated from employment and either—

(2) that sales or production, or both, of such firm or subdivision have decreased absolutely,

(3) that imports from Mexico or Canada of articles like or directly competitive with articles produced by such firm or subdivision have increased, and that the increases imports contributed importantly to such workers' separations or threat of separation and to the decline in sales or production of such firm or subdivision; or

(4) that there has been a shift in production by such workers' firm or subdivision to Mexico or Canada of articles like or directly competitive with articles which are produced by the firm or subdivision.

Negative Determinations NAFTA–TAA

In each of the following cases the investigation revealed that criteria (3) and (4) were not met. Imports from Canada or Mexico did not contribute importantly to workers' separations. There was no shift in production from the subject firm to Canada or Mexico during the relevant period.

NAFTA–TAA–05067 & A; Lamb-Grays Harbor Co., Hoquiam, WA and Meridian, MS.
NAFTA–TAA–05392 & A; International Wire Group, Inc., Bare Ware Div., Plant #4, Pine Bluff, AR and Bare Wire Div., Shunt Plant, Pine Bluff, AR.
NAFTA–TAA–05573; Metalloy Corp., Hudson, MI.
NAFTA–TAA–05638; Scientific Molding Corp. Ltd., SMC Texas Div., Brownsville, TX.
NAFTA–TAA–04773; PSC Scanning, Eugene, OR.
NAFTA–TAA–04966; The Penn Companies, St. Peters, MO.
NAFTA–TAA–05288; Curtron Manufacturing, Inc., Travelers Rest, SC.
NAFTA–TAA–05424; Paulson Wire Rope Corp., Sunbury, PA.
NAFTA–TAA–05524; Tresco Tool, Inc., Guys Milles, PA.
NAFTA–TAA–05584; Carrier Corp., Conway Refrigeration Operation, Conway, AR.
NAFTA–TAA–05590; Hoskins Manufacturing Co., Mio, MI.
NAFTA–TAA–05591; Hoskins Manufacturing Co., Lewiston, MI.
NAFTA–TAA–05611; Stylemaster Apparel, Inc., Union, MO.
NAFTA–TAA–05665; JBI LP, Osseo, WI.
NAFTA–TAA–04732; Peerless Pattern Works, Portland, OR.

The workers firm does not produce an article as required for certification under Section 250(a), Subchapter D, Chapter 2, Title II, the Trade Act of 1974, as amended.

NAFTA–TAA–05162; NACCO Industries, Inc., Materials Handling Group, Parts Distribution Center, Danville, IL

Affirmative Determinations NAFTA–TAA

NAFTA–TAA–04956; Kendall Healthcare, Chatsworth, CA: May 16, 2000.
NAFTA–TAA–05050; Laco Sportswear, Inc., Chattanooga, TN: June 28, 2000.
NAFTA–TAA–05429; Capitol Manufacturing, Harsco Corp. Gas and Fluid Control Group, Lansing, OH: October 9, 2000.
NAFTA–TAA–05438; United For Excellence, River Falls, WI: September 13, 2000.
NAFTA–TAA–05555; The Gillette Co., Oral-B Laboratories, Iowa City, IA: November 13, 2000.
NAFTA–TAA–05585 & A; VF Jeanswear Limited Partnership, Andrews, NC

and Greensboro, NC: November 20, 2000.

NAFTA–TAA–05682; Parallax Power Components LLC, Goodland, IN: December 14, 2000.

NAFTA–TAA–05692; Emerson Electric Co., Alco Controls Div., Hazlehurst, GA: December 17, 2000.

NAFTA–TAA–05618; Cherry Electrical Products, Div. of Cherry Corp., Pleasant Prairie, WI: December 3, 2000.

NAFTA–TAA–05621; Biltwell Clothing Co., Rector Sportswear, Rector, AR: November 9, 2000.

NAFTA–TAA–05628; Cooper Bussmann, Goldsboro, NC: November 27, 2000.

NAFTA–TAA–05633; Evergreen Wholesale Florist, Design Department, Seattle, WA: December 10, 2000.

NAFTA–TAA–05646; Smiley Hats, Inc., Sparks, NV.

NAFTA–TAA–05553; Guilford Mills, Inc., Pine Grove, PA: November 8, 2000.

NAFTA–TAA–05546; Storm Copper Components, Decatur, TN: November 13, 2000.

NAFTA–TAA–05499; Prime Tanning Corp., St. Joseph Plant, St. Joseph, MO: October 24, 2000.

NAFTA–TAA–05460; Summitville Tiles, Inc., Summitville Carolina Div., Morgaton, NC: October 16, 2000.

NAFTA–TAA–05423; Wabash National Corp., Wabash National, LP, Huntsville, TN: September 25, 2000.

NAFTA–TAA–05414; Bobs Candies, Inc., Including Workers of Kelly Temporary Services, Albany, GA: October 9, 2000.

NAFTA–TAA–05359; Crown Pacific Limited Partnership, Coeur D'Alene, ID: August 30, 2000.

I hereby certify that the aforementioned determinations were issued during the month of January, 2002. Copies of these determinations are available for inspection in Room C–5311, U.S. Department of Labor, 200 Constitution Avenue, NW., Washington, D.C. 20210 during normal business hours or will be mailed to persons who write to the above address.

Dated: January 22, 2002.

Edward A. Tomchick,

Director, Division of Trade Adjustment Assistance.

[FR Doc. 02–2327 Filed 1–30–02; 8:45 am]

BILLING CODE 4510–30–M

DEPARTMENT OF LABOR

Employment and Training Administration

[TA–W–38,791 and NAFTA–04630]

Sierra Pacific Industries Loyalton, CA; Notice of Negative Determination Regarding Application for Reconsideration

By application of May 31, 2001, the United Brotherhood of Carpenters & Joiners of America, Western Council of Industrial Workers, Local Union 3074 requested administrative reconsideration of the Department's negative determination regarding eligibility for workers and former workers of the subject firm to apply for Trade Adjustment Assistance (TAA) under petition TA–W–38,791 and North American Free Trade Agreement-Transitional Adjustment Assistance (NAFTA–TAA) under petition NAFTA–4630. The denial notices applicable to workers of Sierra Pacific Industries, Loyalton, California, were signed on April 24, 2001 (TA–W–38,791), and April 30, 2001 (NAFTA–4630) and published in the **Federal Register** on May 9, 2001 (66 FR 23733) and May 18, 2001 (66 FR 27691), respectively.

Pursuant to 29 CFR 90.18(c) reconsideration may be granted under the following circumstances:

(1) If it appears on the basis of facts not previously considered that the determination complained of was erroneous;

(2) If it appears that the determination complained of was based on a mistake in the determination of facts not previously considered; or

(3) If in the opinion of the Certifying Officer, a misinterpretation of facts or of the law justified reconsideration of the decision.

The TAA petition, filed on behalf of workers at Sierra Pacific Industries, Loyalton, California, producing softwood dimensional lumber, was denied because the ''contributed importantly'' group eligibility requirement of section 222(3) of the Trade Act of 1974, as amended, was not met. The ''contributed importantly'' test is generally demonstrated through a survey of the workers' firm's customers. The survey revealed no increase customer imports of softwood dimensional lumber during the relevant period.

The NAFTA–TAA petition for the same worker group was denied because criteria (3) and (4) of the group eligibility requirements in paragraph (a)(1) of Section 250 of the Trade Act, as amended, were not met. A survey was conducted and revealed that customers did not increase their imports of softwood dimensional lumber from Canada or Mexico during the relevant period. The subject firm did not import softwood dimensional lumber, nor was production of softwood dimensional lumber shifted from the workers' firm to Mexico or Canada.

The petitioner alleges that the company in their closure notice indicated that the subject facility has been impacted by imports of softwood lumber from Canada. The petitioner supports this statement by indicating that the United States International Trade Commission, (USITC Publication No. 3426, May 2001) in the conclusion statement ''for the foregoing reasons, we determine there is a reasonable indication that an industry in the United States is threatened with material injury by reason of imports of softwood lumber from Canada are allegedly subsidized by the Government of Canada and sold in the United States at less than fair value.'' The USITC preliminary decision was established after the original TAA and NAFTA–TAA investigations were completed. The Department does examine current USITC decisions during TAA and NAFTA–TAA investigations for import trends as appropriate. An examination of the USITC investigation revealed that Canadian and aggregate U.S. imports of softwood lumber remained relatively stable in the year 2000 over the corresponding 1999 period. Any increases in imports are relatively small and not a major contributing factor to the ''contributed importantly'' criterion of worker group's eligibility requirements of section 222 of the Trade Act.''

The USITC softwood lumber imports statistics provided in the USITC investigation are basket categories and not specific to softwood dimensional lumber and thus not specific to the products produced at the subject firm.

The USITC preliminary decision focuses on the fact that there is reasonable indication that the softwood lumber industry is threatened with material injury by reason of subject imports of softwood lumber from Canada that are allegedly subsidized and sold at less than fair value. A foreign company subsidizing and selling at less than fair value is also not a relevant factor relating to the ''contributed importantly'' criterion of worker group's eligibility requirements of section 222 of the Trade Act.

The petitioner further alleges that high log prices contributed to Sierra Pacific Industries' decision to close their Loyalton facility.

The price of logs is not relevant to the TAA or NAFTA–TAA investigations that were filed on behalf of workers producing softwood dimensional lumber.

Conclusion

After review of the application and investigative findings, I conclude that there has been no error or misinterpretation of the law or of the facts which would justify reconsideration of the Department of Labor's prior decisions. Accordingly, the application is denied.

Signed at Washington, DC, this 14th day of January, 2002.

Edward A. Tomchick,

Director, Division of Trade Adjustment Assistant.

[FR Doc. 02–2339 Filed 1–30–02; 8:45 am]

BILLING CODE 4510–30–M

DEPARTMENT OF LABOR

Employment and Training Administration

[TA–W–38,809]

Blue Mountain Products, LLC Pendleton, OR; Notice of Negative Determination on Reconsideration

On December 11, 2001, the Department issued an Affirmative Determination Regarding Application for Reconsideration for the workers and former workers of the subject firm. The notice will soon be published in the **Federal Register**.

The Department initially denied TAA to workers of Blue Mountain Products, LLC, Pendleton, Oregon based on criterion (3) of the group eligibility requirements of section 222 of the Trade Act of 1974, as amended, not being met. Increased imports did not contribute importantly to worker separations at the subject firm. The workers at the subject firm were engaged in employment related to the production of softwood dimensional lumber.

The petitioner feels that the survey responses may have been filled out incorrectly and that some customers did not respond.

The Department upon the request of the petitioner, examined the survey results and contracted a major customer requesting clarification of their survey response.

The clarification of the respondent's survey revealed that the customer significantly decreased its imports of softwood dimensional lumber, while decreasing its purchases from the subject firm.

Also, upon reexamination, the responses of the initial survey fairly represented customer purchases of dimensional lumber during the relevant period. A review of the survey responses revealed that declining customers significantly decreased their imports of dimensional lumber, while decreasing their purchases from the Blue Mountain Products, LLC during the relevant period.

Conclusion

After consideration, I affirm the original notice of negative determination of eligibility to apply for worker adjustment assistance for workers and former workers of Blue Mountain Products, LLC, Pendleton, Oregon.

Signed at Washington, DC, this 2nd day of January 2002.

Edward A. Tomchick,

Director, Division of Trade Adjustment Assistance.

[FR Doc. 02–2336 Filed 1–30–02; 8:45 am]

BILLING CODE 4510–30–M

DEPARTMENT OF LABOR

Employment and Training Administration

[TA–W–39,619]

Converse, Inc. Currently Known as CVEO Corp. Charlotte, NC; Amended Certification Regarding Eligibility To Apply for Worker Adjustment Assistance

In accordance with section 223 of the Trade Act of 1974 (19 USC 2273) the Department of Labor issued a Certification of Eligibility to Apply for Worker Adjustment Assistance on November 28, 2001, applicable to workers of converse, Inc., Charlotte, North Carolina. The notice was published in the **Federal Register** on December 18, 2001 (66 FR 65220).

At the request of the company, the Department reviewed the certification for workers of the subject firm. The workers are engaged in employment related to the distribution of canvas and rubber athletic footwear.

New information received from the company shows that in May, 2001, Converse, Inc. became known as CVEO Corp. Information also shows that some workers separated from employment at Converse, Inc. had their wages reported under a separate unemployment insurance (UI) tax account for CVEO Corp.

Accordingly, the Department is amending the certification to properly reflect this matter.

The amended notice applicable to TA–W–39, 619 is hereby issued as follows:

All workers Converse, Inc., currently known as CVEO Corp. Charlotte, North Carolina who became totally or partially separated from employment on or after June 25, 2000, through November 28, 2003 are eligible to apply for adjustment assistance under section 223 of the Trade Act of 1974.

Signed at Washington, DC, this 8th day of January, 2002.

Linda G. Poole,

Certifying Officer, Division of Trade Adjustment Assistance.

[FR Doc. 02–2349 Filed 1–30–02; 8:45 am]

BILLING CODE 4510–30–M

DEPARTMENT OF LABOR

Employment and Training Administration

[TA–W–40,422]

Crown Marking Equipment Co. Warrington, PA; Notice of Termination of Investigation

Pursuant to Section 221 of the Trade Act of 1974, an investigation was initiated on December 10, 2001, in response to a petition filed by a company official on behalf of workers at Crown Marking Equipment Company, Warrington, Pennsylvania.

The company official submitting the petition has requested that the petition be withdrawn. Consequently, further investigation in this case would serve no purpose, and the investigation has been terminated.

Signed in Washington, DC, this 16th day of January, 2002.

Linda G. Poole,

Certifying Officer, Division of Trade Adjustment Assistance.

[FR Doc. 02–2326 Filed 1–30–02; 8:45 am]

BILLING CODE 4510–30–M

DEPARTMENT OF LABOR

Employment and Training Administration

[TA–W–38,646]

CSC Ltd Warren, OH; Including an Employee of CSC Ltd, Warren, OH Located in Franklin Park, IL; Amended Certification Regarding Eligibility To Apply for Worker Adjustment Assistance

In accordance with section 223 of the Trade Act of 1974 (19 U.S.C. 2273) the Department of Labor issued a Certification of Eligibility to Apply for

Worker Adjustment Assistance on April 12, 2001, applicable to workers of CSC Ltd, Warren, Ohio. The notice was published in the **Federal Register** on May 2, 2001 (66 FR 22007).

At the request of a petitioner, the Department reviewed the certification for workers of the subject firm. New information shows that a worker separation occurred involving an employee of the CSC Ltd, Warren, Ohio facility located in Franklin Park, Illinois. This employee was engaged in employment related to the production of SBQ steel bar at the Warren, Ohio location of the subject firm.

Based on these findings, the Department is amending this certification to include an employee of the CSC Ltd, Warren, Ohio located in Franklin Park, Illinois.

The intent of the Department's certification is to include all workers of CSC Ltd. adversely affected by increased imports.

The amended notice applicable to TA–W–38,646 is hereby issued as follows:

All workers of CSC Ltd., Warren, Ohio, including a worker CSC, Ltd., Warren, Ohio located in Franklin Park, Illinois, who became totally or partially separated from employment on or after January 22, 2000, through April 12, 2003, are eligible to apply for adjustment assistance under section 223 of the Trade Act of 1974.

Signed at Washington, DC, this 8th day of January, 2002.

Linda G. Poole,

Certifying Officer, Division of Trade Adjustment Assistance.

[FR Doc. 02–2348 Filed 1–30–02; 8:45 am]

BILLING CODE 4510–30–M

DEPARTMENT OF LABOR

Employment and Training Administration

[TA–W–39,112]

DuCoa, L.P., Verona, MO; Notice of Revised Determination on Reconsideration

By letter of August 21, 2001, the company requested administrative reconsideration regarding the Department's Negative Determination Regarding Eligibility to Apply for Worker Adjustment Assistance, applicable to the workers of the subject firm.

The initial investigation resulted in a negative determination issued on July 16, 2001, based on the finding that imports of calcium propionate, sodium propionate and calcium acetate did not contribute importantly to worker separations at the subject plant. The denial notice was published in the **Federal Register** on August 6, 2001 (66 FR 41052).

To support the request for reconsideration, the company supplied additional information. The company indicated that plant production was shifted to an affiliated plant located in the Netherlands and that the foreign plant imported the propionates and acetate back to the United States to serve the subject firm's domestic customer base during the relevant period.

The company also indicated that the overwhelming majority of their customer base was directed toward the U.S. market and that the products sold were not for the export market as indicated in the initial decision.

Conclusion

After careful review of the additional facts obtained on reconsideration, I conclude that increased imports of articles like or directly competitive with those produced at DuCoa, L.P., Verona, Missouri contributed importantly to the declines in sales or production and to the total or partial separation of workers at the subject firm. In accordance with the provisions of the Act, I make the following certification:

All workers of DuCoa, L.P., Verona, Missouri, who became totally or partially separated from employment on or after April 11, 2000 through two years from the date of this certification, are eligible to apply for adjustment assistance under Section 223 of the Trade Act of 1974.

Signed in Washington, DC, this 26th day of December 2001.

Edward A. Tomchick,

Director, Division of Trade Adjustment Assistance.

[FR Doc. 02–2342 Filed 1–30–02; 8:45 am]

BILLING CODE 4510–30–M

DEPARTMENT OF LABOR

Employment and Training Administration

[TA–W–39,365]

Eagle Affiliates Harrison, NJ; Notice of Negative Determination Regarding Application for Reconsideration

By application of August 23, 2001, a petitioner requested administrative reconsideration of the Department's negative determination regarding eligibility for workers and former workers of the subject firm to apply for Trade Adjustment Assistance (TAA). The denial notice applicable to workers of Eagle Affiliates, Harrison, New Jersey was issued on July 23, 2001, and was published in the **Federal Register** on August 15, 2001 (66 FR 42879).

Pursuant to 29 CFR 90.18(c) reconsideration may be granted under the following circumstances:

(1) If it appears on the basis of facts not previously considered that the determination complained of was erroneous;

(2) If it appears that the determination complained of was based on a mistake in the determination of facts not previously considered; or

(3) If in the Opinion of the Certifying Officer, a misinterpretation of facts or of the law justified reconsideration of the decision.

The investigation findings revealed that criterion (3) of the group eligibility requirements of section 222 of the Trade Act of 1974 was not met. Increased imports did not contribute importantly to worker separations at the subject firm. Company imports are of products that are not and can not be made by the subject firm. Imports by the company are for the primary purpose to expand the subject firm's product line and not displace or replace the existing product line.

The request for reconsideration claims that the company imported products like and directly competitive with what the subject plant produced.The petitioner provided examples of products that are like and directly competitive with products produced at the subject firm.

The review of data supplied during the initial investigation shows that a meaningful portion of the company's sales consists of imported products. However, most of these products are hobby/craft related and stand alone items. They are new and unique and do not replace the overwhelming majority of products the company produces and do not provide an alternative to any products the company sells. In summary, company imports of hobby/craft items like and directly competitive with what the subject plant produces are negligible.

The company further indicated that a small portion of houseware sales consists of imports, but are negligible in relation to the products produced by the subject firm.

The preponderance in the declines in employment at the subject plant is related to plant products being outsourced to another domestic firm.

The survey results conducted during the initial investigation revealed that none of the customers increased their imports of products like and directly competitive with what the subject plant produced during the relevant period.

Conclusion

After review of the application and investigative finding, I conclude that there has been no error or misinterpretation of the law or of the facts which would justify reconsideration of the Department of Labor's prior decision. Accordingly, the applicant is denied.

Dated: Signed at Washington, DC, this 3rd day of January 2002.

Edward A. Tomchick,

Director, Division of Trade Adjustment Assistance.

[FR Doc. 02–2337 Filed 1–30–02; 8:45 am]

BILLING CODE 4510–30–M

DEPARTMENT OF LABOR

Employment and Training Administration

[TA–W–39,703]

Echo Bay Minerals Co., Battle Mountain, NV; Notice of Revised Determination on Reopening

On December 14, 2001, the Department on it's own motion reopened the Department's Negative Determination Regarding Eligibility to Apply for Worker Adjustment Assistance, applicable to the workers of the subject firm.

The initial investigation resulted in a negative determination issued on December 5, 2001, based on the finding that imports of gold dore did not contribute importantly to worker separations at the subject plant. The denial notice was published in the **Federal Register** on December 26, 2001 (66 FR 66428).

The company supplied additional information to help clarify the products produced at the subject site. The company provided data showing that the dominant product produced at the subject site was silver. The silver production accounted for over half of the subject plant's revenues during the relevant period.

An examination of aggregate U.S. imports of silver revealed that silver imports increased significantly during the relevant period. The U.S. import to U.S. shipment ratio for silver was greater than 100 percent during the relevant period.

The workers at Echo Bay Minerals Co., Battle Mountain, Nevada were under an existing trade adjustment assistance certification (TA–W–36,557) through August 5, 2001.

Conclusion

After careful review of the additional facts obtained on reconsideration, I conclude that increased imports of articles like or directly competitive with those produced at Echo Bay Minerals Co., Battle Mountain, Nevada, contributed importantly to the declines in sales or production and to the total or partial separation of workers at the subject firm. In accordance with the provisions of the Act, I make the following certification:

All workers of Echo Bay Minerals Co., Battler Mountain, Nevada who became totally or partially separated from employment on or after August 6, 2001, through two years from the date of this certification, are eligible to apply for adjustment assistance under section 223 of the Trade Act of 1974.

Signed in Washington, DC, this 14th day of Janaury 2002.

Edward A. Tomchick,

Director, Division of Trade Adjustment Assistance.

[FR Doc. 02–2343 Filed 1–29–02; 8:45 am]

BILLING CODE 4510–30–M

DEPARTMENT OF LABOR

Employment and Training Administration

[TRA–W–37,964 and TA–W–37,964B]

Hampton Industries Kinston, NC and New York, NY; Amended Certification Regarding Eligibility To Apply for Worker Adjustment Assistance

In accordance with section 223 of the Trade Act of 1974 (19 U.S.C. 2273) the Department of Labor issued a Notice of Certification Regarding Eligibility to Apply for Worker Adjustment Assistance on October 11, 2000, applicable to workers of Hampton Industries, Kinston, North Carolina. The notice was published in the **Federal Register** on November 1, 2000 (65 FR 65330).

At the request of the petitioners, the Department reviewed the certification for workers of the subject firm. The company reports that worker separations occurred at the New York, New York location of the subject firm. The New York, New York location provided administrative services supporting the production of men's and boy's woven and knit shirts at the Kinston, North Carolina facility of the subject firm.

Based on these findings, the Department is amending the certification to include workers of Hampton Industries, New York, New York.

The intent of the Department's certification is to include all workers of Hampton Industries who were adversely affected by increased imports of men's and boy's woven and knit shirts.

The amended notice applicable to TA–W–37,964 is hereby issued as follows:

All workers of Hampton Industries, Kinston, North Carolina (TA–W–37,964) and Hampton Industries, New York, New York (TA–W–37,964B) who became totally or partially separated from employment on or after July 20, 1999, through October 11, 2002, are eligible to apply for adjustment assistance under Section 223 of the Trade Act of 1974.

Signed at Washington, DC, this 21st day of December, 2001.

Linda G. Poole,

Certifying Officer, Division of Trade Adjustment Assistance.

[FR Doc. 02–2345 Filed 1–30–02; 8:45 am]

BILLING CODE 4510–30–M

DEPARTMENT OF LABOR

Employment and Training Administration

[TA–W–39,826]

Henry Manufacturing, Los Angeles, CA; Notice of Termination of Investigation

Pursuant to Section 221 of the Trade Act of 1974, an investigation was initiated on August 13, 2001, in response to a petition filed on behalf of workers at Henry Manufacturing, Los Angeles, California.

This case is being terminated on the basis that the U.S. Department of Labor was unable to locate an official of the company to obtain the information necessary to render a decision.

Consequently, it would serve no purpose to continue the investigation and the investigation has been terminated.

Signed in Washington, DC, this 16th day of January, 2002.

Linda G. Poole,

Certifying Officer, Division of Trade Adjustment Assistance.

[FR Doc. 02–2325 Filed 1–30–02; 8:45 am]

BILLING CODE 4510–30–M

DEPARTMENT OF LABOR

Employment and Training Administration

Investigations Regarding Certifications of Eligibility To Apply for Worker Adjustment Assistance

Petitions have been filed with the Secretary of labor under section 221(a) of the Trade Act of 1974 (''the Act'') and are identified in the Appendix to this

notice. Upon receipt of these petitions, the Director of the Division of Trade Adjustment Assistance, Employment and Training Administration, has instituted investigations pursuant to section 221(a) of the Act.

The purpose of each of the investigations is to determine whether the workers are eligible to apply for adjustment assistance under Title II, Chapter 2, of the Act. The investigations will further relate, as appropriate, to the determination of the date on which total or partial separations began or threatened to begin and the subdivision of the firm involved.

The petitioners or any other persons showing a substantial interest in the subject matter of the investigations may request a public hearing, provided such request is filed in writing with the Director, Division of Trade Adjustment Assistance, at the address shown below, not later than February 11, 2002.

Interested persons are invited to submit written comments regarding the subject matter of the investigations to the Director, Division of Trade Adjustment Assistance, at the address shown below, not later than February 11, 2002.

The petitions filed in this case are available for inspection at the Office of the Director, Division of Trade Adjustment Assistance, Employment and Training Administration, U.S. Department of Labor, Room C–5311, 200 Constitution Avenue, NW., Washington, DC 20210.

Signed at Washington, DC, this 7th day of January, 2002.

Edward A. Tomchick,

Director, Division of Trade Adjustment Assistance.

APPENDIX

[Petitions Instituted On 01/07/2002]

TA–W	Subject firm (petitioners)	Location	Date of petition	Product(s)
40,526	HMG Intermark Worldwide (Co.)	Reading, PA	10/23/2001	Plastic, Wood and Metal Parts.
40,527	Clearwater Forest (Co.)	Kooskia, ID	11/07/2001	Dimensional Lumber.
40,528	Syst-A-Matic Tool (Co.)	Meadville, PA	10/19/2001	Connector Holders Automobiles.
40,529	L–S Electro-Galvanizing (USWA)	Cleveland, OH	12/03/2001	Electrogalvanizing Steel Coils.
40,530	Adcap-Dunn Manufacturing (Wrks)	Camp Hill, AL	10/29/2001	Advertising Caps.
40,531	Price Pfister (Wrks)	Pacoima, CA	11/09/2001	Machinery Parts to Make Faucets.
40,532	Rich Products (BCTGM)	Appleton, WI	11/01/2001	Spiral and Refrigeration Coils.
40,533	Froedtert Malt (UAW)	Milwaukee, WI	11/14/2001	Supply Malt to Breweries.
40,534	Littleford Day, Inc. (PACE)	Florence, KY	12/24/2001	Mixing Machinery for Food & Chemicals.
40,535	Phoenix Gold Int'l (Wrks)	Portland, OR	12/06/2001	Circuit Boards for Loudspeakers.

[FR Doc. 02–2333 Filed 1–30–02; 8:45 am]

BILLING CODE 4510–30–M

DEPARTMENT OF LABOR

Employment and Training Administration

[TA–W–39,456]

Huck Fasteners, Altoona, PA; Notice of Negative Determination Regarding Application for Reconsideration

By application of August 12, 2001 the Laborers' International Union of North America (L.I.U.N.A.), Local 734 requested administrative reconsideration of the Department's negative determination regarding eligibility for workers and former workers of the subject firm to apply for Trade Adjustment Assistance (TAA). The denial notice was signed on June 29, 2001, and published in the **Federal Register** on July 20, 2001 (66 FR 38026).

Pursuant to 29 CFR 90.18(c) reconsideration may be granted under the following circumstances:

(1) If it appears on the basis of facts not previously considered that the determination complained of was erroneous;

(2) If it appears that the determination complained of was based on a mistake in the determination of facts not previously considered; or

(3) If in the opinion of the Certifying Officer, a misinterpretation of facts or of the law justified reconsideration of the decision.

The petition, filed on behalf of workers at Huck Fasteners, Altoona, Pennsylvania producing cold headed, threaded fasteners, was denied because the ''contributed importantly'' group eligibility requirement of section 222(3) of the Trade Act of 1974, as amended, was not met. The preponderance in the declines in employment at the subject plant is the direct result of all production being transferred to another domestic location. The shift in plant production is attributed to a decision by the company to gain increased profitability through manufacturing efficiency. The investigation further revealed that any fluctuations in plant sales are the direct result of the trend in the production of automobiles for which the subject plant product is produced. The investigation also revealed that the subject company did not import cold headed, threaded fasteners during the relevant period.

The petitioner alleges that the loss of a significant and highly profitable segment of the company's business is due to customers purchasing certain product lines from foreign sources.

An examination of the initial investigation revealed that the firm's fluctuations in sales are minor in relation to the deep layoffs that occurred at the subject plant. Any sales fluctuations are related to reduced demand from the subject firm's major customer base, the automobile industry, which had declining automobile sales during the relevant period. Therefore, imports of products like and directly competitive with that which the subject plant produced did not contribute importantly to the separations at the subject plant.

Based on information acquired from the company during the initial investigation, the preponderance in the declines in employment is related to a decision by the company during the early part of 2001 to shift plant production to an affiliated plant located in Medina, Ohio. The Medina facility produced the same type of products as the Altoona plant. The Altoona plant was a much older facility that lacked expansion potential. The Medina plant had a neighboring building that had significant unused capacity and was well suited for the subject plant's production.

During the initial investigation, management indicated that the shift in production could substantially improve manufacturing efficiency by integrating

the Altoona facility into the Medina, Ohio plant. The company further indicated that the products were similar at both locations, the requisite skills of employees are the same and that it is more efficient to run one larger plant than two smaller plants.

Conclusion

After review of the application and investigative findings, I conclude that there has been no error or misinterpretation of the law or of the facts which would justify reconsideration of the Department of Labor's prior decisions. Accordingly, the application is denied.

Dated: Signed at Washington, DC, this 2nd day of January, 2002.

Edward A. Tomchick,

Director, Division of Trade Adjustment Assistance.

[FR Doc. 02–2340 Filed 1–30–02; 8:45 am]

BILLING CODE 4510–30–M

DEPARTMENT OF LABOR

Employment and Training Administration

[TA–W–39,265 and TA–W–39,265A]

McGinley Mills, Inc., Phillipsburg and Easton, PA; Amended Certification Regarding Eligibility To Apply for Worker Adjustment Assistance

In accordance with section 223 of the Trade Act of 1974 (19 USC 2273) the Department of Labor issued a Notice of Certification Regarding Eligibility to Apply for Worker Adjustment Assistance on September 4, 2001, applicable to workers of McGinley Mills, Inc., Easton, Pennsylvania. The notice was published in the **Federal Register** on September 21, 2001, (66 FR 48707).

At the request of the company, the Department reviewed the certification for workers of the subject firm. The company reports that worker separations occurred at the Phillipsburg, New Jersey location of McGinley Mills, Inc. The Phillipsburg, New Jersey location produces woven greige goods needed for the production of ribbons and ribbon products at the Easton, Pennsylvania location of the subject firm.

Based on these findings, the Department is amending the certification to include workers of the Phillipsburg, New Jersey location of McGinley Mills, Inc.

The intent of the Department's certification is to include all workers of McGinley Mills, Inc. who were adversely affected by increased imports.

The amended notice applicable to TA–W–39,265 is hereby issued as follows:

All workers of McGinley Mills, Inc., Easton, Pennsylvania (TA–W–39,265) and McGinley Mills, Inc., Phillipsburg, New Jersey (TA–W–39,265A) who became totally or partially separated from employment on or after April 26, 2000, through September 4, 2003, are eligible to apply for adjustment assistance under section 223 of the Trade Act of 1974.

Signed at Washington, DC, this 17th day of January, 2002.

Linda G. Poole,

Certifying Officer, Division of Trade Adjustment Assistance.

[FR Doc. 02–2347 Filed 1–30–02; 8:45 am]

BILLING CODE 4510–30–M

DEPARTMENT OF LABOR

Employment and Training Administration

[TA–W–39,380]

Spinnaker Coating Maine Incorporated Westbrook, ME; Notice of Negative Determination Regarding Application for Reconsideration

By application dated September 28, 2001, the PACE International Union, Local 1069 requested administrative reconsideration of the Department's negative determination regarding eligibility to apply for Trade Adjustment Assistance (TAA), applicable to workers and former workers of the subject firm. The denial notice was signed on August 23, 2001, and published in the **Federal Register** on September 11, 2001 (66 FR 47242).

Pursuant to 29 CFR 90.18(c) reconsideration may be granted under the following circumstances:

(1) If it appears on the basis of facts not previously considered that the determination complained of was erroneous;

(2) If it appears that the determination complained of was based on a mistake in the determination of facts not previously considered; or

(3) If in the opinion of the Certifying Officer, a misinterpretation of facts or of the law justified reconsideration of the decision.

The petition for the workers of Spinnaker Coating Maine Co., Westbrook, Maine was denied because the ''contributed importantly'' group eligibility requirement of section 222(3) of the Trade Act of 1974, as amended, was not met. The ''contributed importantly'' test is generally demonstrated through a survey of customers of the workers' firm. The survey revealed that none of the respondents increased their purchases of imported pressure sensitive paper (including EDP, thermal transfer, semi gloss etc.), while decreasing their purchases from the subject firm during the relevant period.

The petitioner believes that the Labor Department looked at the wrong product made by Spinnaker Coating Maine Incorporated.

The Department's decision was based on the correct product (pressure sensitive paper). The Department inadvertently referenced the wrong U.S. import category, pressure sensitive labels (HTS–4821902000). The correct product produced at the company plant is classified under the category pressure sensitive papers (HTS–4811210000). The Department uses import statistics as an indicator, but relies primarily on customer surveys to determine if imports ''contributed importantly'' to the declines in sales and/or production and employment at the subject firm. The Department examined the new data supplied (pressure sensitive paper), but based on other data collected during the initial investigation does not consider the import data as contributing importantly to the workers layoffs, due to the survey responses showing an overwhelming reliance on domestic customer purchases of pressure sensitive papers (including EDP, thermal transfer, semi gloss etc) during the relevant period.

The petitioner also feels that the time period considered in the investigation is not correct.

The Department examined the pertinent time periods of 1999, 2000 and the January through June 2001 over the corresponding 2000 period.

The petitioner further indicates that the Department failed to survey the major customers properly and that a specific customer switched from buying from the subject firm in favor of buying imported thermal transfer pressure sensitive paper (a product similar to what was purchased from the subject firm). That customer stopped buying thermal transfer pressure sensitive paper from the subject firm during February 1999, which is beyond the relevant impact period for this petition and investigation.

The survey, as already indicated, revealed that none of the respondents increased their purchases of imported pressure sensitive papers, (including EDP, thermal transfer, semi gloss etc.) importantly, while decreasing their purchases from the subject firm during the relevant period. The survey further revealed that the overwhelming majority of lost company business was due to customers purchasing products that are

like and directly competitive with what the subject plant produced from other domestic sources and only small amounts of imports (and declining) were purchased during the relevant period.

The petitioner further alleges that they feel declining price is a factor in the company sales declines. Price is not a factor that is considered in meeting the ''contributed importantly'' group eligibility requirement of section 222(3) of the Trade Act of 1974, as amended.

The petitioner also indicates that a foreign producer of products that are like and directly competitive with what the subject firm produces is importing at a lower price and indicates that this is the reason for the plant's problems. Based on the survey results, as already indicated, this is not a major factor contributing to the company's declines in sales, production and employment.

Conclusion

After review of the application and investigative findings, I conclude that there has been no error or misinterpretation of the law or of the facts which would justify reconsideration of the Department of Labor's prior decision. Accordingly, the application is denied.

Signed at Washington, DC, this 26th day of December 2001.

Edward A. Tomchick,

Director, Division of Trade Adjustment Assistance.

[FR Doc. 02–2338 Filed 1–30–02; 8:45 am]

BILLING CODE 4510–30–M

DEPARTMENT OF LABOR

Employment and Training Administration

Investigations Regarding Certifications of Eligibility To Apply for Worker Adjustment Assistance

Petitions have been filed with the Secretary of Labor under section 221(a) of the Trade Act of 1974 (''the Act'') and are identified in the Appendix to this notice. Upon receipt of these petitions, the Director of the Division of Trade Adjustment Assistance, Employment and Training Administration, has instituted investigations pursuant to section 221(a) of the Act.

The purpose of each of the investigations is to determine whether the workers are eligible to apply for adjustment assistance under Title II, Chapter 2, of the Act. The investigations will further relate, as appropriate, to the determination of the date on which total or partial separations began or threatened to begin and the subdivision of the firm involved.

The petitioners or any other persons showing a substantial interest in the subject matter of the investigations may request a public hearing, provided such request is filed in writing with the Director, Division of Trade Adjustment Assistance, at the address shown below, not later than February 11, 2002.

Interested persons are invited to submit written comments regarding the subject matter of the investigations to the Director, Division of Trade Adjustment Assistance, at the address shown below, not later than February 11, 2002.

The petitions filed in this case are available for inspection at the Office of the Director, Division of Trade Adjustment Assistance, Employment and Training Administration, U.S. Department of Labor, Room C–5311, 200 Constitution Avenue, NW., Washington, DC 20210.

Signed at Washington, DC, this 31st day of December, 2001.

Edward A. Tomchick,

Director, Division of Trade Adjustment Assistance.

APPENDIX

[Petitions Instituted on 12/31/2001]

TA–W	Subject firm (petitioners)	Location	Date of petition	Product(s)
40,496	Stanley Furniture Co. (Co.)	West End, NC	12/20/2001	Wood Furniture.
40,497	Lundeen's, Inc. (Wkrs)	North Platte, NE	12/19/2001	Platinum and Palladium.
40,498	Precision Twist Drill (USWA)	Rhinelander, WI	11/20/2001	Twist Drill Bits.
40,499	Swift Spinning Mills (Co.)	Columbus, GA	12/19/2001	Ring Spun Cotton.
40,500	Marubeni Denim (Co.)	Columbus, GA	12/19/2001	Denim Fabric.
40,501	Motorola, Inc. (Wkrs)	Schaumburg, IL	10/31/2001	Telecommunication System Harware.
40,502	Midcom (Co.)	Watertown, SD	12/03/2001	Transformers.
40,503	International Paper (Wkrs)	Menasha, WI	11/13/2001	Silicone Coated Substrate.
40,504	LTV Steel Corp (Wkrs)	East Chicago, IN	12/19/2001	Sheet Steel.
40,505	Tee Tease LLC (Wkrs)	Commerce, CA	10/31/2001	Print T-Shirts.
40,506	Sunrise Medical (Co.)	Oshkosh, WI	10/29/2001	Mobile Lifting Devices.
40,507	Dresser Piping (IAMAW)	Bradford, PA	09/24/2001	Pipeline Products.
40,508	Lexington Home Brands (Co.)	Spruce Pines, NC	10/23/2001	Furniture.
40,509	Tmerys Kaolin (Co.)	Dry Branch, GA	10/24/2001	Kaolin Clay.
40,510	Applied Concepts (Wkrs)	Warrendale, PA	11/14/2001	Hand Tools.
40,511	Lea Wayne Knitting Mills (Wkrs)	Morristown, TN	11/09/2001	Socks/Hosiery.
40,512	Robert Mitchell-Douglas (Co.)	Portland, ME	12/14/2001	Stainless Steel Pipe and Fittings.
40,513	American Power Conversion (Wkrs)	West Warwick, RI	12/12/2001	Power Supplies.
40,514	Senco Products, Inc (Wkrs)	Cincinnati, OH	10/24/2001	Staplers, Nailers, Fasteners.
40,515	IEC Electronics (Wkrs)	Newark, NY	10/04/2001	Assemble Electronic Equipment.
40,516	Bayer Clothing Group (UNITE)	Clearfield, PA	12/04/2001	Men's Tailored Suits.
40,517	Artex International, Inc. (Co.)	Boiling Springs, NC	11/23/2001	Cloth Table Skirting and Napkins.
40,518	Marconi (Wkrs)	Milwaukee, WI	11/06/2001	Telecommunication Cabinets.
40,519	Agilent Technologies (Wkrs)	Liberty Lake, WA	12/03/2001	Electronic Test Equipment.
40,520A	Hoskins Manufacturing Co. (Co.)	Lewiston, MI	11/19/2001	Specialty Alloy Wires.
40,520	Hoskins Manufacturing (Co.)	Mio, MI	11/19/2001	Specialty Alloy Wires.
40,521	Republic Technologies (USWA)	Akron, OH	11/19/2001	Steel Bar.
40,522	Johnson Controls Retail (Wkrs)	Reynoldsburg, OH	11/08/2001	Temperature and Lighting Controls.
40,523	Parallax Power Components (Co.)	Goodland, IN	12/17/2001	Transformers.
40,524	Intermetro Industries (Co.)	Douglas, GA	11/19/2001	Wire Steel Shelving.
40,525	Boeing Company (The) (IAMAW)	Renton, WA	12/18/2001	Commercial Aircraft.

[FR Doc. 02–2334 Filed 1–30–02; 8:45 am]

BILLING CODE 4510–30–M

DEPARTMENT OF LABOR

Employment and Training Administration

[TA–W–39,565C]

Thomaston Mills, Inc. Corporation Office, Thomaston, GA, Including an Employee of Thomaston Mills, Inc. Corporate Office, Thomaston, GA Located in Arlington Heights, IL; Amended Certification Regarding Eligibility To Apply for Worker in Adjustment Assistance

In accordance with Section 223 of the Trade Act of 1974 (19 U.S.C. 2273) the Department of labor issued a Certification of Eligibility to Apply for Worker Adjustment Assistance on November 15, 2001, applicable to workers of Thomaston Mills, Inc., Corporate Office, Thomaston, Georgia. The notice was published in the **Federal Register** on November 30, 2001 (66 FR 59817).

At the request of a petitioner, the Department reviewed the certification for workers of the subject firm. New information shows that a worker separation occurred involving an employee of the Corporate Office, Thomaston, Georgia facility of Thomaston Mills, Inc., located in Arlington Heights, Illinois. This employee was engaged in employment related to the production of sheets, pillowcases and comforters and related accessories at the Corporation Office, Thomaston, Georgia location of the subject firm.

Based on these findings, the Department is amending this certification to include an employee of the Corporate Office of Thomaston Mills, Inc., Thomaston, Georgia, located in Arlington Heights, Illinois.

The intent of the Department's certification is to include all workers of Thomaston Mills, Inc. adversely affected by increased imports.

The amended notice applicable to TA–W–39,565C is hereby issued as follows:

All workers of Thomaston Mills, Inc., Corporate Office, Thomaston, Georgia, including a worker the Corporate Office, Thomaston, Georgia, located in Arlington Heights, Illinois, engaged in employment related to the production of sheets, pillowcases and comforters and related accessories who became totally or partially separated from employment on or after June 20, 2000, through November 15, 2003, are eligible to apply for adjustment assistance under Section 223 of the Trade Act of 1974.

Signed at Washington, DC, this 4th day of January, 2002.

Linda G. Poole,

Certifying Officer, Division of Trade Adjustment Assistance.

[FR Doc. 02–2346 Filed 1–30–02; 8:45 am]

BILLING CODE 4510–30–M

DEPARTMENT OF LABOR

Employment and Training Administration

[NAFTA–5567]

Akers National Roll Hyde Park Foundry Division Hyde Park, PA; Notice of Termination of Investigation

Pursuant to Title V of the North American Free Trade Agreement Implementation Act (Pub. L. 103–182) concerning transitional adjustment assistance, hereinafter called NAFTA–TAA and in accordance with section 250(a), Subchapter 2, Title II, of the Trade Act of 1974, as amended (19 USC 2331), an investigation was initiated on November 20, 2001, in response to a petition filed by a company official on behalf of workers at Akers National Roll, Hyde Park Foundry Division, Hyde Park, Pennsylvania.

The petitioner has requested that the petition be withdrawn. Consequently, further investigation in this case would serve no purpose, and the investigation has been terminated.

Signed in Washington, DC, this 16th day of January, 2002.

Linda G. Poole,

Certifying Officer, Division of Trade Adjustment Assistance.

[FR Doc. 02–2329 Filed 1–30–02; 8:45 am]

BILLING CODE 4510–30–M

DEPARTMENT OF LABOR

Employment and Training Administration

[NAFTA–05323]

Armada, Inc. Leland, NC; Amended Certification Regarding Eligibility To Apply for Worker Adjustment Assistance

In accordance with Section 250(A), Subchapter D, Chapter 2, Title II, of the Trade Act of 1974 (19 USC 2273) the Department of Labor issued a Certification for NAFTA Transitional Adjustment Assistance on October 16, 2001, applicable to workers of Armada, Inc., Zinc Die Cast Department, Secondary Department, Leland, North Carolina. The notice was published in the **Federal Register** on October 30, 2001 (66 FR 54784).

At the request of the company, the Department reviewed the certification for workers of the subject firm. Findings show that the Department limited its certification coverage to workers of the subject firm's Zinc Die Cast Department, the Secondary Department or engaged in employment in support of those Departments.

New company information shows that worker separations occurred and a shift in the production of plastic parts and aluminum die cast parts to Canada is occurring at the subject firm's other manufacturing departments; the Aluminum and Plastic Parts Departments resulting in the entire plant closing in early 2002.

It is the intent of the Department to include ''all workers'' of Armada, Inc. adversely affected by a shift in production of plastic parts and aluminum die cast parts to Canada.

The Department is amending the certification determination to correctly identify the worker group to read ''all workers.''

The amended notice applicable to NAFTA–05323 is hereby issued as follows:

All workers of Armada, Inc., Leland, North Carolina who became totally or partially separated from employment on after September 12, 2000, through October 16, 2003, are eligible to apply for NAFTA–TAA under Section 250 of the Trade Act of 1974.

Signed at Washington, DC, this 17th day of January 2002.

Linda G. Poole,

Certifying Officer, Division of Trade Adjustment Assistance.

[FR Doc. 02–2323 Filed 1–30–02; 8:45 am]

BILLING CODE 4510–30–M

DEPARTMENT OF LABOR

Employment and Training Administration

[NAFTA–05705]

Denso Sales California, Inc., Long Beach, CA; Notice of Termination of Investigation

Pursuant to Title V of the North American Free Trade Agreement Implementation Act (Pub. L. 103–182) concerning transitional adjustment assistance, hereinafter called (NAFTA–TAA), and in accordance with section 250(a), Subchapter D, Chapter 2, Title II, of the Trade Act of 1974, as amended (19 USC 2273), an investigation was initiated on November 10, 2001, in response to a petition filed by a

company official on behalf of workers at Denso Sales California, Inc., Long Beach, California.

The petitioner has requested that the petition be withdrawn. Consequently, further investigation in this case would serve no purpose, and the investigation has been terminated.

Signed at Washington, DC, this 16th day of January, 2002.

Linda G. Poole,

Certifying Officer, Division of Trade Adjustment Assistance.

[FR Doc. 02–2328 Filed 1–30–02; 8:45 am]

BILLING CODE 4510–30–M

DEPARTMENT OF LABOR

Employment and Training Administration

[NAFTA—5694]

King Press Corporation, Joplin, Missouri; Notice of Termination of Investigation

Pursuant to Title V of the North American Free Trade Agreement Implementation Act (Pub. L. 103–182) concerning transitional adjustment assistance, hereinafter called NAFTA–TAA and in accordance with section 350(a), subchapter D, Chapter 2, Title II, of the Trade Act of 1974, as amended (19 USC 2331), an investigation was initiated on December 28, 2001, in response to a worker petition which was filed by the company on behalf of workers at King Press Corporation, Joplin, Missouri.

The petitioner has requested that the petition be withdrawn. Consequently further investigation in this case would serve no purpose, and the investigation has been terminated.

Signed in Washington, DC, this 18th day of January, 2002.

Linda G. Poole,

Certifying Officer, Division of Trade Adjustment Assistance.

[FR Doc. 02–2332 Filed 1–30–02; 8:45 am]

BILLING CODE 4510–30–M

DEPARTMENT OF LABOR

Employment and Training Administration

[NAFTA–04818 and NAFTA–04818A]

McGinley Mills, Inc., Easton, PA and McGinley Mills, Inc., Phillipsburg, NJ; Amended Certification Regarding Eligibility To Apply for NAFTA-Transitional Adjustment Assistance

In accordance with section 250(a), Subchapter D, Chapter 2, Title II, of the Trade Act of 1974, as amended (19 U.S.C. 2273), the Department of Labor issued a Certification of Eligibility to Apply for NAFTA Transitional Adjustment Assistance on September 4, 2001, applicable to workers of McGinley Mills, Inc., Easton, Pennsylvania. The notice was published in the **Federal Register** on September 21, 2001 (66 FR 48707).

At the request of the company, the Department reviewed the certification for workers of the subject firm. The company reports that worker separations occurred at the Phillipsburg, New Jersey location of McGinley Mills, Inc. The Phillipsburg, New Jersey location produces woven greige goods needed for the production of ribbons and ribbon products at the Easton, Pennsylvania location of the subject firm.

Based on these findings, the Department is amending the certification to include workers of the Phillipsburg, New Jersey location of McGinley Mills, Inc.

The intent of the Department's certification is to include all workers of Wesley Industries, Inc. affected by increased imports of ribbons and ribbon products from Mexico.

The amended notice applicable to NAFTA–04818 is hereby issued as follows:

All workers of McGinley Mills, Inc., Easton, Pennsylvania (NAFTA–04818) and McGinley Mills, Inc., Phillipsburg, New Jersey (NAFTA–04818A) who became totally or partially separated from employment on or after April 26, 2000, through September 4, 2003, are eligible to apply for NAFTA–TAA under section 250 of the Trade Act of 1974.

Signed in Washington, DC, this 17th day of January, 2002.

Linda G. Poole,

Certifying Officer, Division of Trade Adjustment Assistance.

[FR Doc. 02–2330 Filed 1–30–02; 8:45 am]

BILLING CODE 4510–30–M

DEPARTMENT OF LABOR

Employment and Training and Administration

[NAFTA–5658]

Perceptron Incorporated, Plymouth, MI; Notice of Termination of Investigation

Pursuant to section 221 of the Trade Act of 1974, an investigation was initiated on December 11, 2001, in response to a worker petition which was filed by a company official on behalf of workers at Perceptron, Incorporated, Plymouth, Michigan.

The petitioner has requested that the petition be withdrawn. Consequently, further investigation in this case would serve no purpose, and the investigation has been terminated.

Signed in Washington, DC, this 18th day of January, 2002.

Linda G. Poole,

Certifying Officer, Division of Trade Adjustment Assistance.

[FR Doc. 02–2331 Filed 1–30–02; 8:45 am]

BILLING CODE 4510–30–M

DEPARTMENT OF LABOR

Employment and Training Administration

[NAFTA–05571 and NAFTA–05571A]

Wesley Industries, Inc. Bloomfield Hills, MI; Wesley Industries, Inc. New Haven Foundry, New Haven, MI; Amended Certification Regarding Eligibility To Apply for NAFTA-Transitional Adjustment Assistance

In accordance with Section 250(a), Subchapter D, Chapter 2, Title II, of the Trade Act of 1974, as amended (19 U.S.C. 2273), the Department of Labor issued a Certification of Eligibility to Apply for NAFTA Transitional Adjustment Assistance on December 31, 2001, applicable to workers of Wesley Industries, Inc., Bloomfield Hills, Michigan. The notice will be published soon in the **Federal Register**.

At the request of the petitioner, the Department reviewed the certification for workers of the subject firm. The company reports that worker separations occurred at the New Haven Foundry, New Haven, Michigan facility of Wesley Industries, Inc. The workers were engaged in the production of automotive engine components: cylinder heads.

The intent of the Department's certification is to include all workers of Wesley Industries, Inc. affected by increased imports of cylinder heads from Canada and Mexico.

Accordingly, the Department is amending the certification to include workers of Wesley Industries, Inc., New Haven Foundry, New Haven, Michigan.

The amended notice applicable to NAFTA–05571 is hereby issued as follows:

All workers of Wesley Industries, Inc., Bloomfield Hills, Michigan (NAFTA–5571) and Wesley Industries, New Haven Foundry, New Haven, Michigan (NAFTA–5571A) who became totally or partially separated from employment on or after November 20, 2000, through December 31, 2003, are eligible to apply for NAFTA–TAA under Section 250 of the Trade Act of 1974.

Signed in Washington, DC this 14th day of January 2002.

Linda G. Poole,

Certifying Officer, Division of Trade Adjustment Assistance.

[FR Doc. 02–2324 Filed 1–30–02; 8:45 am]

BILLING CODE 4510–30–M

LEGAL SERVICES CORPORATION

Notice of Intent To Award—Grant Awards for the Provision of Civil Legal Services to Eligible Low-Income Clients Beginning March 1, 2002

AGENCY: Legal Services Corporation.

ACTION: Announcement of intention to make FY 2002 Competitive Grant Awards.

SUMMARY: The Legal Services Corporation (LSC) hereby announces its intention to award grants and contracts to provide economical and effective delivery of high quality civil legal services to eligible low-income clients, beginning March 1, 2002.

DATES: All comments and recommendations must be received on or before the close of business on March 4, 2002.

ADDRESSES: Legal Services Corporation—Competitive Grants, Legal Services Corporation, 750 First Street NE, 10th Floor, Washington, DC 20002–4250.

FOR FURTHER INFORMATION CONTACT: Reginald Haley, Office of Program Performance, (202) 336–8827.

SUPPLEMENTARY INFORMATION: Pursuant to LSC's announcement of funding availability on Thursday, December 6, 2001, LSC will award funds to one or more of the following organizations to provide civil legal services in the indicated service areas. The grant amounts shown below are based on FY 2002 funding levels and reflect a ten month funding period beginning March 1, 2002 and ending December 31, 2002.

Service area	Applicant name	FY 2002 award
LA–1	Capital Area Legal Services Corporation.	$1,246,370
LA–4	New Orleans Legal Assistance Corporation.	1,740,090
LA–8	Southeast Louisiana Legal Services Corporation.	530,650

These grants and contracts will be awarded under the authority conferred on LSC by the Legal Services Corporation Act, as amended (42 U.S.C. 2996e(a)(1)). Awards will be made so that each service area indicated above is served, although none of the listed organizations are guaranteed an award or contract. This public notice is issued pursuant to the LSC Act (42 U.S.C. 2996f(f)), with a request for comments and recommendations concerning the potential grantees within a period of thirty (30) days from the date of publication of this notice. Grants will become effective and grant funds will be distributed on or about March 1, 2002.

Dated: January 28, 2002.

Michael A. Genz,

Director, Office of Program Performance.

[FR Doc. 02–2410 Filed 1–30–02; 8:45 am]

BILLING CODE 7050–01–P

MORRIS K. UDALL SCHOLARSHIP AND EXCELLENCE IN NATIONAL ENVIRONMENTAL POLICY FOUNDATION

The United States Institute for Environmental Conflict Resolution; Agency Information Collection Activities: Submission for OMB Review; Comment Request; U.S. Institute for Environmental Conflict Resolution Application for Support from the Environmental Conflict Resolution Participation Program

AGENCY: Morris K. Udall Scholarship and Excellence in National Environmental Policy Foundation, U.S. Institute for Environmental Conflict Resolution.

ACTION: Notice.

SUMMARY: In compliance with the Paperwork Reduction Act (44 U.S.C. 3501 *et seq.*) and supporting regulations, this document announces that the U.S. Institute for Environmental Conflict Resolution (the U.S. Institute), part of the Morris K. Udall Foundation, is submitting the following Information Collection Request (ICR) to the Office of Management and Budget (OMB): Application for Support from the Environmental Conflict Resolution Participation Program. The ICR describes the nature of the information collection and its expected burden and cost. This document provides information on the need for the ECR Participation Program, information to be provided by applicants in the application form, and estimates the public burden associated with applying for and documenting activities conducted under the ECR Participation Program. Applications will not be accepted by the U.S. Institute until all Paperwork Reduction Act requirements are fulfilled.

DATES: Comments must be submitted on or before March 4, 2002.

ADDRESSES: Send comments referencing ''ECR-Participation Program'' to the following addresses: David P. Bernard, Associate Director, U.S. Institute for Environmental Conflict Resolution, 110 South Church Avenue, Suite 3350, Tucson, Arizona 85701, and Amy Farrell, Office of Management and Budget, 725 17th Street, N.W., Washington, DC 20503.

FOR FURTHER INFORMATION CONTACT: Please direct comments and requests for information, including copies of the ICR, to: David P. Bernard, Associate Director, U.S. Institute for Environmental Conflict Resolution, 110 South Church Avenue, Suite 3350, Tucson, Arizona 85701, Fax: 520–670–5530; Phone: 520–670–5299; E-mail: *bernard@ecr.gov.*

SUPPLEMENTARY INFORMATION:

A. Title for the Collection of Information

Application for Support from the Environmental Conflict Resolution Participation Program

B. Potentially Affected Persons

State and local governments and agencies, tribes, and non-governmental organizations who may apply to the U.S. Institute for support to initiate multi-party, neutral-led conflict resolution processes on environmental and natural resource issues involving federal agencies or interests.

C. Questions To Consider in Making Comments

The Office of Management and Budget (OMB) requests your comments and responses to any of the following questions related to collecting information as part of the Application for Support from the Environmental Conflict Resolution Participation Program.

1. Is the proposed application process (''collection of information'') necessary for the proper performance of the functions of the agency, including whether the information will have practical utility?

2. Is the agency's estimate of the time spent completing the application (''burden of the proposed collection of information'') accurate, including the validity of the methodology and assumptions used?

3. Can you suggest ways to enhance the quality, utility, and clarity of the information collected?

4. Can you suggest ways to minimize the burden of the information collection on those who are to respond, including through the use of appropriate automated electronic, mechanical, or other technological collection techniques or other forms of information technology?

D. Abstract

The U.S. Institute for Environmental Conflict Resolution plans to collect information in an application form to be submitted by entities and organizations for the purpose of documenting the need for U.S. Institute support, both technical and financial, for specific conflict resolution projects. Through the Environmental Conflict Resolution (ECR) Participation Program, the U.S. Institute will help provide neutral facilitation and convening services, and related participation support, for initiation of agreement-focused environmental conflict resolution processes. State and local governments and agencies, tribes, and non-governmental organizations, may apply for support when needed to create balanced stakeholder involvement processes involving federal agencies or interests.

Responses to the collection of information (the application) are voluntary, but are required to obtain a benefit (financial or technical support from the U.S. Institute.) The U.S. Institute may not conduct or sponsor, and a person is not required to respond to, a collection of information unless it displays a currently valid OMB control number.

Background Information: U.S. Institute for Environmental Conflict Resolution. The U.S. Institute for Environmental Conflict Resolution was created in 1998 by the Environmental Policy and Conflict Resolution Act (P.L. 105–156). The U.S. Institute is located in Tucson, Arizona and is part of the Morris K. Udall Foundation, an independent agency of the executive branch of the federal government. The U.S. Institute's primary purpose is to provide impartial, non-partisan assistance to parties in conflicts involving environmental, natural resources, and public lands issues involving a federal interest. The U.S. Institute provides assistance in seeking agreement or resolving disputes through use of mediation and other collaborative, non-adversarial means.

The Need for and Proposed Use of the Information Collected in the Application for the ECR Participation Program: The ECR Participation Program is designed to achieve several objectives, consistent with the U.S. Institute's mission of promoting resolution of environmental disputes involving federal agencies. The specific objectives for this program are:

- To further the U.S. Institute goal of increasing the use of ECR in environmental, natural resource, and public lands conflicts that involve federal agencies.
- To encourage high quality dispute resolution processes by supporting appropriate use of ECR strategies and appropriate balance among interests involved in the processes.
- To support the ability of all affected parties to participate effectively in ECR processes.

The U.S. Institute conducted an assessment of the need for support to foster participation by all essential parties in ECR efforts early in 2001. The U.S. Institute consulted with representatives of constituencies who would be potential users of this program to ascertain their views of the need for ECR participation support. Representatives of environmental groups, natural resource users, tribes, local and state governments, and ECR practitioners provided information about the specific needs for such a fund and about criteria for eligibility.

The consultative contacts identified the following needs for participation support.

- Many opportunities exist to build consensus on environmental and natural resource issues, but the parties are often unable to do so without neutral, third party assistance.
- State, local, non-governmental, and tribal entities often lack the technical and financial resources to obtain neutral feasibility assessments, ECR process design and facilitation.
- Third party assistance is often required to ensure balanced representation, or a level playing field, for non-governmental, state and local groups, and others who are not paid to participate in environmental negotiations and collaborative processes.
- There is also a need to provide training in interest-based negotiations for those working to overcome serious differences on environmental and natural resource issues.
- A participation support program should be easy to use and accessible to all types of applicants involved in ECR processes, but particularly to groups and situations that would be less likely than others to succeed without it.

Draft Guideline and Sample Application Form

The U.S. Institute has developed guidelines and an application form to gather information about ECR processes for which support was requested. This provides the U.S. Institute with a mechanism for determining if the applicants meet the criteria for receiving support and for targeting support to the most promising ECR efforts (i.e. those likely to produce implementable results through collaboration.) The proposed Guidelines and sample Application form are located on the U.S. Institute's website, at *www.ecr.gov/new.htm#ecr*. It is expected that the ECR Participation Program will be open for applications through March, 31, 2004, roughly two years from approval of the information collection request.

ICR Process

The first Federal Register notice was published on July 24, 2001, (66 (142): 38434–38440). No formal written comments were received. However, several organizations wrote to the U.S. Institute indicating an interest in the program, and asking to be notified when the program begins accepting funding applications.

E. Burden Statement

The annual public reporting and record keeping burden for this collection of information is estimated to average eight hours per response. As used here, burden means the total time, effort, or financial resources expended by persons to generate, maintain, retain, or disclose or provide information to or for a Federal agency. This includes the time needed to review instructions; develop, acquire, install, and utilize technology and systems for the purpose of collecting, validating, and verifying information, processing and maintaining information, and disclosing and providing information and transmitting information.

The Application Form will be available both in hard copy and through the U.S. Institute's web site. It is a two-page list of questions about the proposed ECR effort and the activities that require support. The application includes suggested budget formats, and is designed to allow applicants to attach existing documents and, where possible, reduce the time required for completion of the application. An application can be submitted electronically, through e-mail, and/or in hard copy via fax or mail. The required quarterly progress report form is also included in the application form attached to this submittal.

The Burden calculation includes time for applicants to complete the application form and the time required for the submittal of quarterly reports. It assumes a pool of 15 applicants per

year, and assumes that 10 of the applications will be approved. Quarterly reports would be required only for those ten funded projects. It further assumes an average of four quarterly project reports per project.

Respondent Pool: State agency staff, local government staff, non-governmental organizations, tribal governments, and natural resource user group association staff or members.

Estimated Number of Respondents (per year): 15.

Proposed Frequency of Response: One response per application, plus up to four quarterly progress reports per year.

Respondent Time Burden Estimates:

Time per Response for Initial Application: Eight hours.

Time per Responder for Quarterly Reports: 4 hours per year (1 hour per report).

Total Burden Per Year for Applications: 120 hours for 15 applicants.

Total Burden Per Year for Quarterly Reports: 40 hours for ten projects.

Respondent Cost Burden Estimates (managerial level salary at $55 per hour):

Capital or start-up costs	$0
Cost per Respondent per application	440
Cost per Project for Quarterly Reports	220
Total Annual Cost Burden for 15 Applications	6,600
Total Annual Cost Burden for Quarterly Reports	2,200
Total Annual Cost Burden	8,800
Total Cost Burden, Two Years	17,600

Send comments on the Agency's need for this information, the accuracy of the provided burden estimates, and any suggested methods for minimizing respondent burden, including through use of automated collection techniques to the addresses listed above. Please refer to ECR Participation Program in any correspondence.

(Authority: 20 USC Sec. 5601–5609).

Dated the 25th day of January 2002.

Christopher L. Helms,

Executive Director, Morris K. Udall Foundation.

[FR Doc. 02–2317 Filed 1–30–02; 8:45 am]

BILLING CODE 6820–FN–P

NATIONAL SCIENCE FOUNDATION

Notice of Intent To Seek Approval To Extend and Revise a Current Information Collection

AGENCY: National Science Foundation.

ACTION: Notice and request for comments.

SUMMARY: The National Science Foundation (NSF) is announcing plans to request renewal of this collection. In accordance with the requirement of section 3505(c)(2)(A) of the Paperwork Reduction Act of 1995 (Pub. L. 104–13), we are providing opportunity for public comment on this action. After obtaining and considering public comment, NSF will prepare the submission requesting that OMB approve clearance of this collection for no longer than 3 years.

DATES: Written comments on this notice must be received by April 1, 2002, to be assured of consideration. Comments received after that date will be considered to the extent practicable.

For Additional Information or Comments: Contact Suzanne H. Plimpton, Reports Clearance Officer, National Science Foundation, 4201 Wilson Boulevard, Suite 295, Arlington, Virginia 22230; telephone 703—292—7556; or send email to splimpto@nsf.gov. Individuals who use a telecommunications device for the deaf (TDD) may call the Federal Information Relay Service (FIRS) at 1–800–877–8339 between 8 a.m. and 8 p.m., Eastern time, Monday through Friday. You also may obtain a copy of the date collection instrument and instructions from Ms. Plimpton.

SUPPLEMENTARY INFORMATION:

Title of Collection: Survey of Graduate Students and Postdoctorates in Science and Engineering.

OMB Approval Number: 3145–0062.

Expiration Date of Approval: September 30, 2002.

Type of Request: Intent to seek approval to extend with revision an information collection for three years.

Proposed Project: Graduate students in science, engineering, and health fields in U.S. colleges and universities, by source and mechanism of support and by demographic characteristics. An electronic/mail survey, the Survey of Graduate Students and Postdoctorates in Science and Engineering originated in 1966 and has been conducted annually since 1972. The survey is the academic graduate enrollment component of the NSF statistical program that seeks to ''provide'' a central clearinghouse for the collection, interpretation, and analysis of data on the availability of, and the current and projected need for, scientific and technical resources in the United States, and to provide a source of information for policy formulation by other agencies of the Federal government'' as mandated in the National Science Foundation Act of 1950.

The proposed project will continue the current survey cycle for three to five years. The annual Fall surveys for 2002 through 2006 will survey the universe of approximately 725 reporting units at approximately 600 institutions offering accredited graduate programs in science, engineering, or health. The survey has provided continuity of statistics on graduate school enrollment and support for graduate students in all science & engineering (S&E) and health fields, with separate data requested on demographic characteristics (race/ethnicity and gender by full-time and part-time enrollment status). Statistics from the survey are published in NSF's annual publication series *Graduate Students and Postdoctorates in Science and Engineering, in NSF publication Science and Engineering Indicators, Women, Minorities, and Persons with Disability in Science and Engineering,* and are available electronically on the World Wide Web.

The survey will be sent primarily to the administrators at the Institutional Research Offices. To minimize burden, NSF instituted a Web-based survey in 1998 through which institutions can enter data directly or upload preformatted files. The Web-based survey includes a complete program for editing and trend checking and allows institutions to receive their previous year's data for comparison. Respondents will be encouraged to participate in this Web-based survey should they so wish. Traditional paper questionnaires will also be available, with editing and trend checking performed as part of the survey processing. Overall burden is expected to be reduced from 2002 to 2004 due to expanded use by institutions of the Web-based data collection system.

In Fall 2000, the survey achieved a total response rate of 99.4 percent for institutions and 99.0 percent for departments.

Estimate of Burden: Burden estimates are as follows:

	Total number of institutions	Department	Burden hours
FY 1998	722	11,718	1.83
FY 1999	720	11,833	2.53
FY 2000	717	11,899	2.42

Respondents: Individuals.

Estimated Number of Responses: 11,899 (from the 2000 collection).

Estimated Total Annual Burden on Respondents: 28,796 hours (from the 2000 collection).

Frequency of Responses: Annually.

Comments: Comments are invited on (a) whether the proposed collection of information is necessary for the proper performance of the functions of the Agency, including whether the information shall have practical utility; (b) the accuracy of the Agency's estimate of the burden of the proposed collection of information; (c) ways to enhance the quality, utility, and clarity of the information on respondents; and (d) ways to minimize the burden of the collection of information on those who are to respond, including through the use of appropriate automated, electronic, mechanical, or other technological collection techniques or other forms of information technology.

Dated: January 28, 2002.

Suzanne H. Plimpton,

Reports Clearance Officer, National Science Foundation.

[FR Doc. 02–2416 Filed 1–30–02; 8:45 am]

BILLING CODE 7555–01–M

NUCLEAR REGULATORY COMMISSION

[Docket NO. 50–346]

Firstenergy Nuclear Operating Company, Davis-Besse Nuclear Power Station, Unit 1; Environmental Assessment and Finding of No Significant Impact

The U.S. Nuclear Regulatory Commission (NRC) is considering issuance of an amendment to an existing exemption from title 10 of the Code of Federal Regulations (10 CFR) part 50, section III.G, appendix R, for Facility Operating License No. NPF–3, issued to FirstEnergy Nuclear Operating Company (the licensee), for operation of the Davis-Besse Nuclear Power Station (DBNPS), Unit 1, located in Ottawa County, Ohio. Therefore, as required by 10 CFR 51.21, the NRC is issuing this environmental assessment and finding of no significant impact.

Environmental Assessment

Identification of the Proposed Action

The proposed action would amend an existing exemption concerning certain requirements of Section III.G of Appendix R, ''Fire Protection Program for Nuclear Power Facilities Operating Prior to January 1, 1979.'' Specifically, this amendment to the existing exemption applies to requirements for the DBNPS Component Cooling Water (CCW) Heat Exchanger and Pump Room (Room 328).

The proposed action is in accordance with the licensee's application dated December 21, 2000.

The Need for the Proposed Action

The proposed action is needed because an underlying basis for the existing exemption, namely, the use of fire protection wrap for certain equipment, is no longer necessary due to plant modifications. Section III.G of Appendix R requires, in part, 20 feet of separation between redundant trains of systems necessary for hot shutdown in the same fire area, with no intervening combustibles. Contrary to this requirement, all three CCW pumps for the DBNPS are located at one end of Room 328, and although the redundant CCW pumps are more than 20 feet apart, the third pump, a ''swing'' component, is located between the redundant pumps. The centerline of the swing pump is approximately 11 feet from the centerline of each of the other two pumps. Only one CCW pump is needed for safe shutdown. In order to maintain the remainder of the room in compliance with Appendix R requirements, certain electrical conduits and valves in Room 328 associated with the CCW system were, at the time of the request for the existing exemption, protected against fire to ensure that a fire would not lead to the inoperability of both CCW pumps. Since the issuance of the existing exemption, the necessity of protecting these conduits and valves from fire has evolved to the point where their fire protection wrapping is no longer required in order to ensure safe shutdown.

Environmental Impacts of the Proposed Action

The NRC has completed its evaluation of the proposed action and concludes that the proposed exemption does not involve radioactive wastes, release of radioactive material into the atmosphere, solid radioactive waste, or liquid effluents released to the environment.

The Davis-Besse Nuclear Power Station systems were evaluated in the Final Environmental Statement (FES) dated October 1975 (NUREG 75/097). The proposed exemption will not involve any change in the waste treatment systems described in the FES.

The proposed action will not significantly increase the probability or consequences of accidents, no changes are being made in the types of effluents that may be released off site, and there is no significant increase in occupational or public radiation exposure. Therefore, there are no significant radiological environmental impacts associated with the proposed action.

With regard to potential non-radiological impacts, the proposed action does not have a potential to affect any historic sites. It does not affect non-radiological plant effluents and has no other environmental impact. Therefore, there are no significant non-radiological environmental impacts associated with the proposed action.

Accordingly, the NRC concludes that there are no significant environmental impacts associated with the proposed action.

Environmental Impacts of the Alternatives to the Proposed Action

As an alternative to the proposed action, the staff considered denial of the proposed action (i.e., the ''no-action'' alternative). Denial of the application would result in no change in current environmental impacts. The environmental impacts of the proposed action and the alternative action are similar.

Alternative Use of Resources

The action does not involve the use of any different resource than those previously considered in the Final Environmental Statement for the DBNPS, dated October 1975.

Agencies and Persons Consulted

In accordance with its stated policy, on January 16, 2002, the NRC staff consulted with Ohio State official, C.

O'Claire, Chief, Radiological Branch, Ohio Emergency Management Agency, regarding the environmental impact of the proposed action. The state official had no comments.

Finding of No Significant Impact

On the basis of the environmental assessment, the NRC concludes that the proposed action will not have a significant effect on the quality of the human environment. Accordingly, the NRC has determined not to prepare an environmental impact statement for the proposed action.

For further details with respect to the proposed action, see the licensee's letter dated December 21, 2000. Documents may be examined, and/or copied for a fee, at the NRC's Public Document Room (PDR), located at One White Flint North, 11555 Rockville Pike (first floor), Rockville, Maryland. Publicly available records will be accessible electronically from the ADAMS Public Library component on the NRC Web site, *http://www.nrc.gov* (the Public Electronic Reading Room). Persons who do not have access to ADAMS or who encounter problems in accessing the documents located in ADAMS, should contact the NRC PDR Reference staff by telephone at 1–800–397–4209, or 301–415–4737, or by e-mail at *pdr@nrc.gov.*

Dated at Rockville, Maryland, this 25th day of January 2002.

For the Nuclear Regulatory Commission.

Anthony J. Mendiola,

Chief, Section 2, Project Directorate III, Division of Licensing Project Management, Office of Nuclear Reactor Regulation.

[FR Doc. 02–2375 Filed 1–30–02; 8:45 am]

BILLING CODE 7590–01–P

NUCLEAR REGULATORY COMMISSION

Advisory Committee on Reactor Safeguards; Meeting of the Subcommittee on Plant License Renewal; Notice of Meeting

The ACRS Subcommittee on Plant License Renewal will hold a meeting on March 13, 2002, City Hall, 404 West Palm Drive, Florida City, Florida.

The entire meeting will be open to public attendance.

The agenda for the subject meeting shall be as follows: *Wednesday, March 13, 2002—1:30 p.m. until the conclusion of business.*

The Subcommittee will review the NRC staff's final Safety Evaluation Report related to the license renewal of Turkey Point Nuclear Power Plant Units 3 and 4. The purpose of this meeting is to gather information, analyze relevant issues and facts, and to formulate proposed positions and actions, as appropriate, for deliberation by the full Committee.

Oral statements may be presented by members of the public with the concurrence of the Subcommittee Chairman; written statements will be accepted and made available to the Committee. Electronic recordings will be permitted only during those portions of the meeting that are open to the public, and questions may be asked only by members of the Subcommittee, its consultants, and staff. Persons desiring to make oral statements should notify the Designated Federal Official named below five days prior to the meeting, if possible, so that appropriate arrangements can be made.

During the initial portion of the meeting, the Subcommittee, along with any of its consultants who may be present, may exchange preliminary views regarding matters to be considered during the balance of the meeting.

The Subcommittee will then hear presentations by and hold discussions with representatives of the NRC staff and other interested persons regarding this review.

Further information regarding topics to be discussed, whether the meeting has been canceled or rescheduled, and the Chairman's ruling on requests for the opportunity to present oral statements and the time allotted therefor, can be obtained by contacting the Designated Federal Official, Mr. Noel F. Dudley (telephone 301/415–6888) between 7:30 a.m. and 4:15 p.m. (EST). Persons planning to attend this meeting are urged to contact the above named individual one or two working days prior to the meeting to be advised of any potential changes to the agenda, etc., that may have occurred.

Dated: January 24, 2002.

Sam Duraiswamy,

Acting Associate Director for Technical Support, ACRS/ACNW.

[FR Doc. 02–2374 Filed 1–30–02; 8:45 am]

BILLING CODE 7590–01–P

NUCLEAR REGULATORY COMMISSION

Updated and Consolidated Decommissioning Policy and Guidance of the Nuclear Regulatory Commission's Office of Nuclear Material Safety and Safeguards; Notice of Availability

AGENCY: Nuclear Regulatory Commission.

ACTION: Notice of availability and request for public comment.

SUMMARY: The Nuclear Regulatory Commission's (NRC) Office of Nuclear Material Safety and Safeguards (NMSS) is announcing the availability of a draft document ''Consolidated NMSS Decommissioning Guidance: Decommissioning Process'' (NUREG–1757, Vol. 1), for public comment. This document provides guidance for the planning and implementation of the termination of licenses issued through NMSS's licensing programs. The guidance is intended for NRC staff, licensees, and the public and is being developed in response to the NMSS performance goals, in the NRC's Strategic Plan, of: Making NRC activities and decisions more effective, efficient, and realistic; and reducing unnecessary regulatory burden on stakeholders. NRC is seeking public comment in order to receive feedback from the widest range of interested parties and to ensure that all information relevant to developing the document is available to the NRC staff. This draft document is being issued for comment only and is not intended for interim use. The NRC will review public comments received on the draft document. Suggested changes will be incorporated, where appropriate, in response to those comments, and a final document will be issued for use.

DATES: Comments on this draft document should be submitted by May 1, 2002. Comments received after that date will be considered to the extent practicable.

ADDRESSES: NUREG–1757 is available for inspection and copying for a fee at the Commission's Public Document Room, U.S. NRC's Headquarters Building, 11555 Rockville Pike (First Floor), Rockville, Maryland, and electronically from the ADAMS Electronic Reading Room on the NRC Web site at, *http://www.nrc.gov/reading-rm/adams.html.* NUREG–1757 is also available on the NRC web site at: *http://www.nrc.gov/reading-rm/doc-collections/nuregs/staff* or *http://www.nrc.gov/materials/decommissioning/regs-guides-comm.html.*

A free single copy of NUREG–1757 will be available to interested parties until the supply is exhausted. Such copies may be requested by writing to the U.S. Nuclear Regulatory Commission, Distribution Services, Washington, DC 20555–0001 or submitting e-mail to *distribution@nrc.gov.*

Members of the public are invited and encouraged to submit written comments to: Jack D. Parrott, Project Scientist, Office of Nuclear Material Safety and Safeguards, Mail Stop T–7F27, U.S. Nuclear Regulatory Commission, Washington, DC 20555–0001. Hand-deliver comments to: 11555 Rockville Pike, Rockville, MD, between 7:30 a.m. and 4:15 p.m., Federal workdays. Comments may also be sent electronically to *decomcomments@nrc.gov.* Copies of comments received may be examined at the ADAMS Electronic Reading Room on the NRC Web site, and the NRC Public Document Room, 11555 Rockville Pike, Room O–1F21, Rockville, MD 20852. The NRC Public Document Room is open from 7:45 a.m. to 4:15 p.m., Monday through Friday, except on Federal holidays.

FOR FURTHER INFORMATION CONTACT: Jack D. Parrott, Mail Stop T–7F27, U.S. Nuclear Regulatory Commission, Washington, DC 20555–0001. Telephone: (301) 415–6700; Internet: *jdp1@nrc.gov.*

SUPPLEMENTARY INFORMATION: As part of its redesign of the materials license program, the NRC's Office of Nuclear Material Safety and Safeguards (NMSS) is consolidating and updating numerous decommissioning guidance documents into a three-volume NUREG. The three volumes are as follows: (1) The General Materials Decommissioning Process; (2) Characterization, Survey, and Determination of Radiological Criteria; and (3) Financial Assurance, Recordkeeping, and Timeliness. Volume 1 of this NUREG series, entitled ''Consolidated NMSS Decommissioning Guidance: Decommissioning Process,'' is the first of these three volumes and is intended for use by licensees and NRC staff.

The approaches to license termination described in this NUREG will help to identify the information (subject matter and level of detail) needed to terminate a license by considering the specific circumstances of the wide range of radioactive materials users licensed by NRC. This guidance takes a risk-informed, performance-based approach to the information needed to support an application for the termination of a materials license. When published as a final report, this guidance should be used by licensees in preparing license amendment requests. NRC staff will use the final guidance in reviewing these amendment requests.

Draft NUREG–1757, Volume 1, ''Consolidated NMSS Decommissioning Guidance: Decommissioning Process,'' is the first of three volumes on decommissioning guidance. When final, it is intended for use by applicants, licensees, NRC license reviewers, and other NRC personnel. This document updates and builds upon the risk-informed approach in, and in whole or in part incorporates the NMSS Decommissioning Handbook (NUREG/BR–0241, ''NMSS Handbook for Decommissioning Fuel Cycle and Materials Facilities,'' March 1997). This draft NUREG also incorporates the parts of the ''NMSS Decommissioning Standard Review Plan,'' NUREG–1727, September 2000, that provide guidance for developing those parts of a decommissioning plan addressing general site description and current radiological conditions; decommissioning activities, management, and quality assurance; and modifications to decommissioning programs and procedures.

The policies and procedures discussed in draft NUREG–1757, Volume 1, will be used by NRC staff overseeing the decommissioning program at licensed fuel cycle, fuel storage, and materials sites to evaluate a licensee's decommissioning actions. This draft NUREG also describes, and make available to the public, methods acceptable to the NRC staff in implementing specific parts of the Commission's regulations, to delineate techniques and criteria used by the staff in evaluating decommissioning actions, and to provide guidance to licensees responsible for decommissioning NRC-licensed sites. This NUREG will not substitute for regulations, and compliance with it will not be required. Methods and solutions different from those in this NUREG will be acceptable, if they provide a basis for concluding that the decommissioning actions are in compliance with the Commission's regulations. Other NRC licensees, e.g. nuclear reactors or uranium recovery facilities, may find this information useful, but they are not the subject of this NUREG.

Further information on the overall decommissioning guidance consolidation and updating project can be found in the **Federal Register** Notice publishing the plan for the project (66 FR 21793).

Commentors are encouraged to submit their written comments to the addresses listed above. To ensure efficient and complete comment resolution, commentors are requested to reference the page number and the line number of the document to which the comment applies if possible.

Dated at Rockville, MD, this 23rd day of January, 2002.

For the Nuclear Regulatory Commission.

Larry W. Camper,

Chief, Decommissioning Branch, Division of Waste Management, Office of Nuclear Material Safety and Safeguards.

[FR Doc. 02–2376 Filed 1–30–02; 8:45 am]

BILLING CODE 7590–01–P

SECURITIES AND EXCHANGE COMMISSION

[Release No. IC–25401]

Notice of Applications for Deregistration Under Section 8(f) of the Investment Company Act of 1940

January 25, 2002.

The following is a notice of applications for deregistration under section 8(f) of the Investment Company Act of 1940 for the month of January, 2002. A copy of each application may be obtained for a fee at the SEC's Public Reference Branch, 450 Fifth St., NW, Washington, DC 20549–0102 (tel. 202–942–8090). An order granting each application will be issued unless the SEC orders a hearing. Interested persons may request a hearing on any application by writing to the SEC's Secretary at the address below and serving the relevant applicant with a copy of the request, personally or by mail. Hearing requests should be received by the SEC by 5:30 p.m. on February 19, 2002, and should be accompanied by proof of service on the applicant, in the form of an affidavit or, for lawyers, a certificate of service. Hearing requests should state the nature of the writer's interest, the reason for the request, and the issues contested. Persons who wish to be notified of a hearing may request notification by writing to the Secretary, SEC, 450 Fifth Street, NW, Washington, DC 20549–0609. For Further Information Contact: Diane L. Titus, at (202) 942–0564, SEC, Division of Investment Management, Office of Investment Company Regulation, 450 Fifth Street, NW, Washington, DC 20549–0506.

PaineWebber Mutual Fund Trust [File No. 811–4312]

Summary: Applicant seeks an order declaring that it has ceased to be an investment company. On February 23, 2001, applicant's series, PaineWebber National Tax-Free Income Fund, transferred its assets to PACE Municipal Fixed Income Investments, a series of PACE Select Advisors Trust, based on net asset value. On March 9, 2001, applicant's remaining series, PaineWebber California Tax-Free Income Fund, transferred its assets to

MFS California Municipal Bond Fund, a series of MFS Municipal Series Trust, based on net asset value. Expenses of $214,588 incurred in connection with the reorganization were paid by Brinson Advisors, Inc., applicant's investment adviser.

Filing Date: The application was filed on January 7, 2002.

Applicant's Address: 51 West 52nd St., New York, NY 10019–6114.

PaineWebber Municipal Series [File No. 811–5014]

Summary: Applicant seeks an order declaring that it has ceased to be an investment company. On March 9, 2001, applicant transferred its assets to MFS Municipal Bond Fund, a series of MFS Municipal Series Trust, and MFS Municipal High Income Fund, a series of MFS Series Trust III, based on net asset value. Expenses of $82,287 incurred in connection with the reorganization were paid by Brinson Advisors, Inc., applicant's investment adviser.

Filing Date: The application was filed on January 7, 2002.

Applicant's Address: 51 West 52nd Street, New York, NY 10019–6114.

MaxFund Trust [File No. 811–8499]

Summary: Applicant seeks an order declaring that it has ceased to be an investment company. On August 13, 2001, one of applicant's portfolios, Fifth Third/Maxus Aggressive Value Fund, transferred its assets to Fifth Third Microcap Value Fund, a portfolio of Fifth Third Funds, based on net asset value. On October 1, 2001, applicant's remaining portfolio, Fifth Third/Maxus Ohio Heartland Fund made a liquidating distribution to its shareholders based on net asset value. Applicant incurred no expenses in connection with either the reorganization or liquidation.

Filing Date: The application was filed on December 4, 2001.

Applicant's Address: 1404 East Ninth St., Fifth Floor, Cleveland, OH 44114.

Fifth Third/Maxus Income Fund [File No. 811–4144]

Fifth Third/Maxus Equity Fund [File No. 811–5865]

Fifth Third/Maxus Laureate Fund [File No. 811–7516]

Summary: Each applicant seeks an order declaring that it has ceased to be an investment company. By October 23, 2001, each applicant transferred its assets to a portfolio of Fifth Third Funds, based on net asset value. Fifth Third Bank, an affiliate of applicants' investment adviser, paid all expenses incurred in connection with the reorganizations.

Filing Date: The applications were filed on December 4, 2001. Fifth Third/Maxus Income Fund filed an amended application on December 10, 2001.

Applicants' Address: 1404 East Ninth St., Fifth Floor, Cleveland, OH 44114.

Arrow Funds [File No. 811–7041]

Summary: Applicant seeks an order declaring that it has ceased to be an investment company. On November 14, 1997, applicant transferred its assets to The Arch Funds, Inc., based on net asset value. Expenses of approximately $20,000 incurred in connection with the reorganization were paid by applicant and the acquiring fund.

Filing Date: The application was filed on January 2, 2002.

Applicant's Address: 1001 Liberty Ave., Pittsburgh, PA 15222.

COUNTRY Growth Fund, Inc. [File No. 811–1338]

COUNTRY Tax Exempt Bond Fund, Inc. [File No. 811–2840]

COUNTRY Taxable Fixed Income Series Fund, Inc. [File No. 811–3186]

Summary: Each applicant seeks an order declaring that it has ceased to be an investment company. On October 31, 2001, each applicant transferred its assets to COUNTRY Mutual Funds Trust based on net asset value. Expenses of $26,261, $9,481 and $7,810, respectively, incurred in connection with the reorganizations were paid by COUNTRY Trust Bank, investment adviser to each applicant.

Filing Date: The applications were filed on December 21, 2001.

Applicants' Address: 808 IAA Dr., Bloomington, IL 61702–2901.

PaineWebber America Fund [File No. 811–3502]

PaineWebber Olympus Fund [File No. 811–4180]

PaineWebber Managed Assets Trust [File No. 811–6376]

PaineWebber Securities Trust [File No. 811–7473]

PaineWebber Investment Trust II [File No. 811–7104]

Summary: Each applicant seeks an order declaring that it has ceased to be an investment company. By February 23, 2001, each applicant had transferred its assets to a corresponding series of PaineWebber PACE Select Advisors Trust based on net asset value. Expenses of $243,347, $171,183, $130,421, $253,868 and $90,272, respectively, incurred in connection with the reorganizations were paid by Brinson Advisors, Inc., investment adviser to each applicant.

Filing Dates: The applications were filed on December 19, 2001, except PaineWebber Investment Trust II, which was filed on December 21, 2001.

Applicants' Address: 51 West 52nd St., New York, NY 10019–6114.

Nationwide Asset Allocation Trust [File No. 811–7805]

Summary: Applicant seeks an order declaring that it has ceased to be an investment company. On July 20, 2001, applicant made a liquidating distribution to its shareholders based on net asset value. Expenses of $2,901 incurred in connection with the liquidation were paid by Villanova SA Capital Trust, applicant's investment adviser.

Filing Date: The application was filed on December 11, 2001.

Applicant's Address: Three Nationwide Plaza, Columbus, OH 43215.

Bonfiglio & Reed Options Fund [File No. 811–9905]

Summary: Applicant seeks an order declaring that it has ceased to be an investment company. On January 29, 2001, applicant made a final liquidating distribution to its shareholders based on net asset value. Expenses of $50 incurred in connection with the liquidation were paid by Bonfiglio & Reed LLC, applicant's investment adviser.

Filing Dates: The application was filed on September 26, 2001, and amended on January 7, 2002.

Applicant's Address: P.O.Box 2256, Tempe, AZ 82580–2256.

Credit Suisse Asset Management Strategic Global Income Fund, Inc. [File No. 811–5458]

Summary: Applicant, a closed-end investment company, seeks an order declaring that it has ceased to be an investment company. On May 14, 2001, applicant transferred its assets to Credit Suisse Asset Management Income Fund, Inc. based on net asset value. Expenses of $694,820 incurred in connection with the reorganization were shared equally between applicant and the acquiring fund.

Filing Dates: The application was filed on June 22, 2001, and amended on December 28, 2001.

Applicant's Address: 466 Lexington Ave., 16th Floor, New York, NY 10017.

For the Commission, by the Division of Investment Management, pursuant to delegated authority.

J. Lynn Taylor,

Assistant Secretary.

[FR Doc. 02–2372 Filed 1–30–02; 8:45 am]

BILLING CODE 8010–01–P

SECURITIES AND EXCHANGE COMMISSION

[Release No. 34–45334; File No. SR–Amex–2001–111]

Self-Regulatory Organizations; Notice of Filing and Immediate Effectiveness of Proposed Rule Change by the American Stock Exchange LLC Regarding Off-Exchange Trading in Exchange Listed Options

January 25, 2002.

Pursuant to section 19(b)(1) of the Securities Exchange Act of 1934 (''Act''),[1] and Rule 19b–4 [2] thereunder, notice is hereby given that on December 26, 2001, the American Stock Exchange LLC (''Amex'' or ''Exchange'') filed with the Securities and Exchange Commission (''Commission'') the proposed rule change as described in Items I, II, and III below, which Items have been prepared by the Exchange. The Commission is publishing this notice to solicit comments on the proposed rule change from interested persons.

I. Self-Regulatory Organization's Statement of the Terms of Substance of the Proposed Rule Change

The Exchange proposes to amend Exchange Rule 959 to reinstate text inadvertently deleted that allows certain trading in Exchange listed options contracts to occur off the Exchange.

The text of the proposed rule change appears below. New text is in italics; deletions are in brackets.

Rule 959. Accommodation Transactions

(a) No Change.

(b) *Any member, member organization or other person who is a non-member broker or dealer and who directly or indirectly controls, is controlled by, or is under common control with, a member, member organization (any such other person referred to as an affiliated person) may effect any transaction as principal in the over-the-counter market in any class of option contracts listed on the Exchange for a premium not in excess of $1.00 per contract.*

Commentary.....

For each transaction executed by a member organization or affiliated person pursuant to paragraph (b), a record of such transaction shall be maintained by the member or member organization and shall be available for inspection by the Exchange for a period of three years. Such record shall include the circumstances under which the transaction was executed in conformity with this rule.

II. Self-Regulatory Organization's Statement of the Purpose of, and Statutory Basis for, the Proposed Rule Change

In its filing with the Commission, the Exchange included statements concerning the purpose of and basis for the proposed rule change and discussed any comments it received on the proposed rule change. The text of these statements may be examined at the places specified in Item IV below. The Exchange has prepared summaries, set forth in sections A, B, and C below, of the most significant aspects of such statements.

A. Self-Regulatory Organization's Statement of the Purpose of, and Statutory Basis for, the Proposed Rule Change

(1) Purpose

On February 1, 2000, the Exchange filed with the Commission pursuant to Rule 19b–4 of the Act,[3] a proposed rule change to rescind its off-board trading rules (Exchange Rules 5 and 6) and to make conforming changes to Rules 25, 317, 900 and 959.[4] The Commission subsequently approved the proposed rule change on June 1, 2000.[5] According to the Exchange, rather than simply deleting the reference to Exchange Rule 5 in paragraph (b) of Rule 959, paragraph (b) was inadvertently deleted in its entirety. Exchange Rule 959(b) concerned the ability of Exchange members to effect transactions in the over-the-counter market in options. The provision required that options premiums not exceed $1.00 per contract for any class of options listed on the Exchange.

Rule 19c–3(a) of the Act [6] prohibits a national securities exchange from imposing off-board trading restrictions on equity securities listed after April 26, 1979. In 2000, the New York Stock Exchange Inc. proposed the elimination of its off-board equity trading restrictions by filing with the Commission to rescind NYSE Rule 390. Amex and the other national securities exchanges then filed proposed rule changes with the Commission to eliminate off-board trading restrictions by their members. The Commission approved these proposals to eliminate off-board trading restrictions. However, as indicated in Rule 19c–3(a) of the Act, off-board trading restrictions by members of the national securities exchanges may still apply to options contracts issued by the Options Clearing Corporation (''OCC''). Therefore, because listed options issued and cleared by OCC are required to be transacted on an Exchange,[7] the elimination of Exchange Rule 959(b) to allow limited over-the-counter transaction in the market by members was not proper. Exchange Rule 959(b) will allow members to effect transactions in options contracts as principals in the over-the-counter market for a premium not in excess of $1.00 per contract. The Commentary to Exchange Rule 959 will require that for each over-the-counter transaction, the member, member organization, or affiliated person, maintain a record of such transaction and keep such records available for Exchange inspection for three years.

Other options exchanges, such as the Chicago Board Options Exchange, Inc. (''CBOE''), the Pacific Stock Exchange, Inc. (''PCX'') and the Philadelphia Stock Exchange, Inc. (''Phlx'') permit transactions in the over-the-counter market under the same restrictions.[8] At the time when off-board trading restrictions for equity securities were lifted in June 2000, the other options exchanges did not similarly revise their rules to delete reference to over-the-counter transactions.

(2) Statutory Basis

The Exchange believes that the proposed rule change is consistent with section 6(b) of the Act [9] in general and furthers the objectives of Section 6(b)(5) [10] in particular in that it is designed to prevent fraudulent and manipulative acts and practices, to promote just and equitable principles of trade, to foster cooperation and coordination with persons engaged in facilitating transactions in securities, to remove impediments to and perfect the mechanism of a free and open market

[1] 15 U.S.C. 78s(b)(1).

[2] 17 CFR 240.19b–4.

[3] 17 CFR 240.19b–4.

[4] *See* Securities Exchange Act Release No. 42460 (February 25, 2000), 65 FR 11618 (March 3, 2000).

[5] Securities Exchange Act Release No. 42888 (June 1, 2000), 65 FR 36855 (June 12, 2000).

[6] 17 CFR 240.19c(3)(a).

[7] *See* OCC By-Laws Article VI Section 1.

[8] *See* CBOE Rule 6.49, PCX Rule 6.78, and Phlx Rule 1059.

[9] 15 U.S.C. 78f(b).

[10] 15 U.S.C. 78f(b)(5).

and a national market system, to protect investors and the public interest, and is not designed to permit unfair discrimination between customers, issuers, brokers and dealers.

B. Self-Regulatory Organization's Statement on Burden on Competition

The Exchange believes that the proposed rule change will impose no burden on competition.

C. Self-Regulatory Organization's Statement on Comments on the Proposed Rule Change Received From Members, Participants, or Others

No written comments were solicited or received with respect to the proposed rule change.

III. Date of Effectiveness of the Proposed Rule Change and Timing for Commission Action

The foregoing rule change has become effective pursuant to section 19(b)(3)(A)(iii) of the Act [11] and Rule 19b–4(f)(3) [12] thereunder because the Exchange has designated it as concerned solely with the administration of the Exchange. At any time within 60 days of the filing of such proposed rule change, the Commission may summarily abrogate such rule change if it appears to the Commission that such action is necessary or appropriate in the public interest, for the protection of investors, or otherwise in furtherance of the purposes of the Act.

IV. Solicitation of Comments

Interested persons are invited to submit written data, views and arguments concerning the foregoing, including whether the proposed rule change is consistent with the Act. Persons making written submissions should file six copies thereof with the Secretary, Securities and Exchange Commission, 450 Fifth Street, NW., Washington, DC 20549–0609. Copies of the submission, all subsequent amendments, all written statements with respect to the proposed rule change that are filed with the Commission, and all written communications relating to the proposed rule change between the Commission and any person, other than those that may be withheld from the public in accordance with the provisions of 5 U.S.C. 552, will be available for inspection and copying in the Commission's Public Reference Room. Copies of such filing will also be available for inspection and copying at the principal office of the Amex. All submissions should refer to File No. SR–Amex–2001–111 and should be submitted by February 21, 2002.

For the Commission, by the Division of Market Regulation, pursuant to delegated authority.[13]

Margaret H. McFarland,

Deputy Secretary.

[FR Doc. 02–2370 Filed 1–30–02; 8:45 am]

BILLING CODE 8010–01–P

[11] 15 U.S.C. 78s(b)(3)(A)(iii).

[12] 17 CFR 240.19–4(f)(3).

[13] 17 CFR 200.30–3(a)(12).

SECURITIES AND EXCHANGE COMMISSION

[Release No. 34–45335; File No. SR–GSCC–2001–03]

Self-Regulatory Organizations; Government Securities Clearing Corporation; Order Approving Proposed Rule Change Relating to Establishment of a Cross-Margining Agreement With the Board of Trade Clearing Corporation

January 25, 2002.

I. Introduction

On April 4, 2001, the Government Securities Clearing Corporation (''GSCC'') filed with the Securities and Exchange Commission (''Commission'') proposed rule change SR–GSCC–2001–03 pursuant to section 19(b)(1) of the Securities Exchange Act of 1934 (''Act'').[1] Notice of the proposal was published in the **Federal Register** on September 11, 2001.[2] No comment letters were received. For the reasons discussed below, the Commission is approving the proposed rule change.

II. Description [3]

On August 19, 1999, the Commission approved GSCC's proposed rule filing to establish a cross-margining program with other clearing organizations and to begin its program with the New York Clearing Corporation (''NYCC'').[4] More recently, the Commission approved GSCC's proposed rule filing to establish a similar cross-margining program with the Chicago Mercantile Exchange (''CME'').[5] GSCC is now establishing a similar cross-margining arrangement with the Board of Trade Clearing Corporation.[6]

This development is significant because the Chicago Board of Trade, for which BOTCC clears, is by far the largest Treasury futures exchange market, and certain of its products, such as the 10-Year Note futures contract, which will be cross-margined with GSCC products, continue to experience growth in volume. Thus, establishing the cross-margining program between GSCC and BOTCC has the potential to provide significant collateral savings to the industry in general and to GSCC's and BOTCC's common members in particular. From each clearing organization's perspective, the cross-margining program will provide important risk management benefits. These benefits include such things as providing the clearing organizations with more information concerning members' intermarket positions to enable the clearing organizations to make more accurate decisions regarding the true risk of the positions to the clearing organizations and encouraging coordinated liquidation processes for a joint participant, or a participant and its affiliate, in the event of an insolvency.[7]

A. GSCC's Cross-Margining Program

GSCC believes that the most efficient and appropriate approach for establishing cross-margining programs for fixed-income and other interest rate products is to do so on a multilateral basis with GSCC as the ''hub.'' Each clearing organization that participates in a cross-margining program with GSCC, such as NYCC, CME, and now BOTCC, (hereinafter ''Participating CO'') enters into a separate cross-margining agreement between itself and GSCC. Each of the agreements will have similar terms and no preference will be given by GSCC to one Participating CO over another.

Cross-margining is available to any GSCC netting member (with the exception of inter-dealer broker netting

[1] 15 U.S.C. 78s(b)(1).

[2] Securities Exchange Act Release No. 44766 (September 5, 2001), 66 FR 47251.

[3] The description of GSCC's cross-margining program is drawn largely from representations made by GSCC.

[4] Securities Exchange Act Release No. 41766 (August 19, 1999), 64 FR 46737 (August 26, 1999) [File No. SR–GSCC–98–04]. The requisite rule changes necessary for GSCC to engage in cross-margining programs with other clearing organizations were made in the NYCC cross-margining rule filing.

[5] Securities Exchange Act Release No. 44301 (May 11, 2001), 66 FR 28207 (May 22, 2001) [File No. SR–GSCC–00–13]. In addition to approving GSCC's cross-margining program with the CME, the order granted approval to change GSCC Rule 22, Section 4, to clarify that before GSCC credits an insolvent member for any profit realized on the liquidation of the member's final net settlement positions, GSCC will fulfill its obligations with respect to that member under cross-margining agreements.

[6] BOTCC is a Delaware corporation that acts as the clearing organization for certain futures contracts and options on futures contracts that are traded on the Chicago Board of Trade and that are regulated by the Commodity Futures Trading Commission.

[7] The GSCC–BOTCC cross-margining agreement requires ownership of 50 percent or more of the common stock of an entity to indicate control of the entity for purposes of the definition of ''affiliate.''

members) that is, or that has an affiliate that is, a member of a Participating CO. Any such member (or pair of affiliated members) may elect to have its margin requirements at both clearing organizations calculated based upon the net risk of its cash and repo positions at GSCC and of its offsetting and correlated positions in related contracts carried at the Participating CO. Cross-margining is intended to lower the cross-margining participant's (or pair of affiliated members') overall margin requirement. The GSCC member (and its affiliate, if applicable) will sign an agreement under which it (or they) agree to be bound by the cross-margining agreement between GSCC and the Participating CO and which allows GSCC or the Participating CO to apply the member's (or its affiliate's) margin collateral to satisfy any obligation of GSCC to the Participating CO (or vice versa) that results from a default of the member (or its affiliate).

Margining based on the net combined risk of correlated positions is based on an arrangement under which GSCC and each Participating CO agree to accept the correlated positions in lieu of supporting collateral. Under this arrangement, each clearing organization holds and manages its own positions and collateral and independently determines the amount of margin that it will make available for cross-margining, referred to as the ''residual margin amount.''

GSCC computes the amount by which the cross-margining participant's margin requirement can be reduced at each clearing organization by comparing the participant's positions and the related margin requirements at GSCC as against those at each Participating CO. GSCC offsets each cross-margining participant's residual margin amount at GSCC against the offsetting residual margin amounts of the participant (or its affiliate) at each Participating CO.[8] If, within a given pair of offset classes, the margin that GSCC has available for a participant is greater than the combined margin submitted by the Participating COs, GSCC will allocate a portion of its margin equal to the combined margin at the Participating COs. If, within a given pair of offset classes, the combined margin submitted by the Participating COs is greater than the margin that GSCC has available for that participant, GSCC will first allocate its margin to the Participating CO with the most highly correlated position. If, within a given pair of offset classes, the positions are equally correlated, GSCC will allocate pro rata based upon the residual margin amount available at each Participating CO. GSCC and each Participating CO may then reduce the amount of collateral that they collect to reflect the offsets between the cross-margining participant's positions at GSCC and its (or its affiliate's) positions at the Participating CO.[9] In the event of the default and liquidation of a cross-margining participant, the loss sharing between GSCC and each of the Participating COs will be based upon the foregoing allocations and the cross-margin reduction.

GSCC will guarantee the cross-margining participant's (or its affiliate's) performance to each Participating CO up to a specified maximum amount based on the loss sharing formula contained in the Cross-Margining Agreement. Each Participating CO will provide the same guaranty to GSCC. The amount of the guarantee is the lowest of: (1) The cross-margin loss of the worse off party; (2) the higher of the cross-margin reduction or the cross-margin gain of the better off party; (3) the amount required to equalize the parties' cross-margin results; or (4) the amount by which the cross-margining reduction exceeds the better off party's cross-margin loss if both parties have cross-margin losses.

B. Information Specific to the Current Agreement Between GSCC and BOTCC

1. *Participation in the cross-margining program*: Any netting member of GSCC other than an inter-dealer broker will be eligible to participate.[10] Any clearing member of BOTCC will be eligible to participate.

2. *Products subject to cross-margining*: The products that will be eligible for the GSCC–BOTCC cross-margining arrangement are the Treasury securities with certain remaining maturities that fall into GSCC's Offset Classes C, E, F, and G as defined in GSCC's Rules that are cleared by GSCC and the 2-Year Note, 5-Year Note, 10-Year Note, and U.S. Treasury Bond futures contracts and options on these futures contracts that are cleared by BOTCC.[11] All eligible positions maintained by a cross-margining participant in its account at GSCC and in its (or its affiliate's) proprietary account at BOTCC will be eligible for cross-margining.[12] Initially, as a conservative measure, residual margin amounts will be applied only within the same offset class (*e.g.*, the 2-Year Note against the 2-Year Note future). An appropriate disallowance factor[13] based on correlation studies and a minimum margin factor[14] will be applied.[15]

3. *Margin Rates*: GSCC and BOTCC currently use different margin rates to establish margin requirements for their respective products. Margin reductions in the GSCC–BOTCC cross-margining arrangement will always be computed based on the lower of the applicable margin rates. This methodology results in a potentially lesser benefit to the participant but ensures a more conservative result (*i.e.*, more collateral held at the clearing organization) for both GSCC and the Participating COs.

4. *Daily Procedures*: On each business day, it is expected that BOTCC will inform GSCC of the residual margin amounts it is making available for cross-margining by approximately 11 p.m. New York time. GSCC will inform BOTCC by approximately 1 a.m. New York time how much of these residual margin amounts it will use. Reductions as computed will be reflected in the daily clearing fund calculation.

C. Benefits of Cross-Margining

GSCC believes that its cross-margining program enhances the safety

[8] The residual margin amount is the long margin amount or the short margin amount in each offset class that is available for cross-margining after all internal offsets are conducted within and between offset classes at a particular clearing organization.

[9] GSCC and each Participating CO unilaterally have the right not to reduce a participant's margin requirement by the cross-margin reduction or to reduce it by less than the cross-margin reduction. However, the clearing organizations may not reduce a participant's margin requirement by more than the cross-margin reduction.

[10] Because inter-dealer brokers should not and generally do not have positions at GSCC at the end of the day, they should have no margin requirement to be reduced.

[11] Non-mortgage backed agency securities will be added at a later date. GCF Repo products will not be included in the arrangement. GSCC will notify the Commission when additional securities and futures are added to the cross-margining program.

[12] The GSCC–BOTCC cross-margining arrangement will be applicable on the futures side only to positions in a proprietary account of a cross-margining participant at BOTCC. The arrangement will not apply to positions in a customer account at BOTCC that would be subject to segregation requirements under the Commodity Exchange Act. This is also the case with respect to the arrangements with NYCC and the CME.

[13] The disallowance factor is the haircut reflective of the correlation analysis done by GSCC for each offset class.

[14] The minimum margin factor is the contractually agreed upon cap on the amount of the margin reduction that the clearing organizations will allow. (In some of the documents submitted by GSCC, the minimum margin factor is referred to as the minimum disallowance factor.) Initially, the GSCC–BOTCC cross-margining program will employ a 50% minimum margin factor. Should GSCC decide to change the minimum factor, it will submit a proposed rule filing under Section 19(b) of the Act.

[15] GSCC will review the cross-margining parameters on a yearly basis unless market events dictate the need for more frequent reviews. Letter from Jeffrey F. Ingber, Managing Director, General Counsel, and Secretary, GSCC (November 6, 2001).

and soundness of the settlement process for the Government securities marketplace by: (1) Providing clearing organizations with more information concerning members' intermarket positions (which is especially valuable during stressed market conditions) to enable them to make more accurate decisions regarding the true risk of such positions to the clearing organizations; (2) allowing for enhanced sharing of collateral resources; and (3) encouraging coordinated liquidation processes for a joint participant, or a participant and its affiliate, in the event of an insolvency. GSCC further believes that cross-margining benefits participating clearing members by providing members with the opportunity to more efficiently use their collateral. More important from a regulatory perspective, however, is that cross-margining programs have long been recognized as enhancing the safety and soundness of the clearing system itself. Studies of the October 1987 market break gave support to the concept of cross-margining. For example, The Report of the President's Task Force on Market Mechanisms (January 1988) noted that the absence of a cross-margining system for futures and securities options markets contributed to payment strains in October 1987. The Interim Report of the President's Working Group on Financial Markets (May 1988) also recommended that the SEC and the Commodity Futures Trading Commission facilitate cross-margining programs among clearing organizations. This resulted in the first cross-margining arrangement between clearing organizations which was approved in 1988.[16]

III. Discussion

Section 19(b) of the Act directs the Commission to approve a proposed rule change of a self-regulatory organization if it finds that such proposed rule change is consistent with the requirements of the Act and the rules and regulations thereunder applicable to such organization. In section 17A(a)(2)(A)(ii) of the Act, Congress directs the Commission having due regard for, among other things, the public interest, the protection of investors, the safeguarding of securities and funds, to use its authority under the Act to facilitate the establishment of linked or coordinated facilities for clearance and settlement of transactions in securities, securities options, contracts of sale for future delivery and options thereon, and commodity options.[17] Section 17A(b)(3)(F) of the Act requires that the rules of a clearing agency be designed to assure the safeguarding of securities and funds which are in the custody or control of the clearing agency for which it is responsible.[18] The Commission finds that the approval of GSCC's proposed rule change is consistent with these Sections.

First, the Commission's approval of GSCC's proposed rule change to establish a cross-margining arrangement with BOTCC and to extend its hub and spoke approach to cross-margining to include BOTCC along with CME and NYCC is in line with the Congressional directive to the Commission to facilitate linked and coordinated facilities for the clearance and settlement of securities and futures.[19] Second, approval of GSCC's proposal should result in increased and better information sharing between GSCC and Participating COs regarding the portfolios and financial conditions of participating joint and affiliated members. As a result, GSCC and participating COs will be in a better position to monitor and assess the potential risks of participating joint or affiliated members and will be in a better position to handle the potential losses presented by the insolvency of any joint or affiliated member. Therefore, GSCC's proposal should help GSCC better safeguard the securities and funds in its possession or control or for which it is responsible. While cross-margining should provide benefits and efficiencies to common participants in GSCC and BOTCC, GSCC has determined to adopt a conservative approach in introducing its cross-margining program with BOTCC. We believe that that is a prudent approach consistent with maintaining the safety and soundness of the national system for prompt and accurate clearance and settlement of transactions in securities.

IV. Conclusion

On the basis of the foregoing, the Commission finds that the proposed rule change is consistent with the requirements of the Act and in particular section 17A of the Act and the rules and regulations thereunder.

It Is Therefore Ordered, pursuant to section 19(b)(2) of the Act, that the proposed rule change (File No. SR–GSCC–2001–03) be and hereby is approved.

For the Commission by the Division of Market Regulation, pursuant to delegated authority.[20]

Margaret H. McFarland,

Deputy Secretary.

[FR Doc. 02–2371 Filed 1–30–02; 8:45 am]

BILLING CODE 8010–01–P

[16] Securities Exchange Act Release No. 26153 (October 3, 1988), 53 FR 39567 (October 7, 1988) [File No. SR–OCC–86–17] (order approving cross-margining program between OCC and The Intermarket Clearing Corporation).

[17] 15 U.S.C. 78q–1(a)(2)(A)(ii).

[18] 15 U.S.C. 78q-1(b)(3)(F).

[19] 15 U.S.C. 78q-1(a)(2)(A)(ii).

[20] 17 CFR 200.30–3(a)(12).

DEPARTMENT OF STATE

[Public Notice 3901]

Bureau of Educational and Cultural Affairs Request for Grant Proposals: International Sports Programming Initiative

SUMMARY: The Office of Citizen Exchanges of the Bureau of Educational and Cultural Affairs announces an open competition for International Sports Programming Initiative. Public and private non-profit organizations meeting the provisions described in Internal Revenue Code 26 U.S.C. 501(c)(3) may submit proposals to discuss approaches designed to enhance and improve the infrastructure of youth sports programs in selected countries in Africa, South Asia, Central Asia, South East Asia and the Near East.

Program Information:

Overview

The Office of Citizen Exchanges welcomes proposals that directly respond to the following thematic areas. Given budgetary limitations, projects for other themes will not be eligible for consideration under the FY–2002 Sports Program Initiative.

Training Sports Coaches

The World Summit on Physical Education (Berlin, 1999) stated that a ''quality physical education helps children to develop the patterns of interest in physical activity, which are essential for healthy development and which lay the foundation for healthy, adult lifestyles.'' Coaches are critical to the accomplishment of this goal. A coach not only needs to be qualified to provide the technical assistance required by young athletes to improve, but must also understand how to aid a young person to discover how success in athletics can be translated into achievement in the development of life skills and in the classroom. Projects submitted in response to this theme would be aimed at aiding youth, secondary school and university coaches in the target countries in the development and implementation of appropriate training methodologies,

through seminars and outreach. The goal is to ensure the optimal technical proficiency among the coaches participating in the program while also emphasizing the role sports can play in the long-term economic well being of youth.

Youth Sports Management Exchange

Exchanges funded under this theme would help American and foreign youth sport coaches, adult sponsors, and sports associations officials share their experience in managing and organizing youth sports activities, particularly in financially challenging circumstances, and would contribute to better understanding of role of sports as an significant factor in educational success. Americans are in a good position to convey to the foreign counterparts the importance of linking success in sports to educational achievement and how these two factors can contribute to short-term and long-term economic prospects.

Youth With Disability

Exchanges supported by this theme are designed to promote and sponsor sports, recreation, fitness and leisure events for children and adults with physical disabilities. Project goals include improving the quality of life for people with disabilities by providing affordable inclusive sports and recreational experiences that build self-esteem and confidence, enhancing active participation in community life and making a significant contribution to the physical and psychological health of people with disabilities. Physically and developmentally challenged individuals will be fully included in the sports and recreation opportunities in our communities.

Sports and Health

Projects funded under this category will focus on effective and practical ways to use sport personalities and sports health professionals to increase awareness among young people of the importance of following a healthy life style to reduce illness, prevent injuries and speed the rehabilitation and recovery. Emphasis will be on the responsibility of the broader community to support healthy behavior. The project goals are to promote and integrate scientific research, education, and practical applications of sports medicine and exercise science to maintain and enhance physical performance, fitness, health, and quality of life. (Actual medical training and dispensing of medications are outside the purview of this theme.)

Guidelines

The Office seeks proposals that provide professional experience and exposure to American life and culture through internships, workshops and other learning-sharing experiences hosted by local institutions. The experiences also will provide Americans the opportunity to learn about culture and the social and economic challenges young athletes face today. Travel under these grants should provide for a two-way exchange. Projects should not simply focus on athletic training; they should be designed to provide practical, hands-on experience in U.S. public/private sector settings that may be adapted to an individual's institution upon return home. Proposals may combine elements of professional enrichment, job shadowing and internships appropriate to the language ability and interests of the participants.

Applicants must identify the local organizations and/or individuals in the counterpart country with whom they are proposing to collaborate and describe in detail previous cooperative programming and/or contacts. Specific information about the counterpart organizations' activities and accomplishments should be included in the section on Institutional Capacity.

Exchanges and training programs supported by the institutional grants from the Bureau should operate at two levels: they should enhance institutional partnerships, and they should offer practical information to individuals and groups to assist them with their professional responsibilities. Strong proposals usually have the following characteristics: A strong existing partnership between a U.S. organization and an in-country institution or the potential to develop such a linkage; a proven track record of working in the proposed field; cost-sharing from U.S. and/or in-country sources; experienced staff with language facility; a clear, convincing plan showing how permanent results will be accomplished as a result of the activity funded by the grant; and a follow-on plan beyond the scope of the Bureau grant. The Bureau would like to see tangible forms of time and money contributed to the project by the prospective grantee institution, as well as funding from third party sources.

Programs must comply with J–1 visa regulations. Please refer to Solicitation Package for further information.

Selection of Participants

All grant proposals should clearly describe the type of persons who will participate in the program as well as the process by which participants will be selected. It is recommended that programs in support of U.S. internships include letters tentatively committing host institutions to support the internships. In the selection of foreign participants, the Bureau and U.S. Embassies abroad retain the right to review all participant nominations and to accept or deny participants recommended by grantee institutions. However, grantee institutions should describe in detail the recruitment and selection process they recommend. The grantee institution will also provide the names of American participants and brief (two pages) biographical data on each American participant to the Office of Citizen Exchanges for information purposes. Priority will be given to foreign participants who have not previously traveled to the United States.

Budget Guidelines

The Bureau has an overall budget of $400,000 for this competition. Grants awarded to eligible organizations with less than four years of experience in conducting international exchange programs will be limited to $60,000. The Bureau has set a ceiling of $135,000 for proposals funded under this competition. The Bureau encourages applicants to provide maximum levels of cost sharing and funding from private sources in support of its programs.

Applicants must submit a comprehensive budget for the entire program. Grant awards may not exceed $135,000. There must be a summary budget as well as breakdowns reflecting both administrative and program budgets. Applicants may provide separate sub-budgets for each program component, phase, location, or activity to provide clarification.

Allowable costs for the program include the following:

(1) All Participant Expenses (foreign and American).

(2) Other Program Expenses as needed and justified.

(3) Administrative Expenses including indirect costs.

Please refer to the Solicitation Package for complete budget guidelines and formatting instructions.

Announcement Title and Number

All correspondence with the Bureau concerning this RFGP should reference the above title ''Sports Programming Initiative'' and reference number ECA/PE/C–02–55.

FOR FURTHER INFORMATION CONTACT: Please contact the Office of Citizen Exchanges, Room 224, U.S. Department of State, 301 4th Street, SW.,

Washington, DC 20547, telephone number 202/619–5326, fax number 202/260–0440, or *pmidgett@pd.state.gov* to request a Solicitation Package. The Solicitation Package contains detailed award criteria, required application forms, specific budget instructions, and standard guidelines for proposal preparation. Please specify Bureau Program Raymond H. Harvey on all other inquiries and correspondence.

Please read the complete **Federal Register** announcement before sending inquiries or submitting proposals. Once the RFGP deadline has passed, Bureau staff may not discuss this competition with applicants until the proposal review process has been completed.

To Download a Solicitation Package Via Internet

The entire Solicitation Package may be downloaded from the Bureau's Web site at *http://exchanges.state.gov/education/RFGPs.* Please read all information before downloading.

Deadline for Proposals

All proposal copies must be received at the Bureau of Educational and Cultural Affairs by 5 p.m. Washington, DC time on Friday, April 19, 2002. Faxed documents will not be accepted at any time. Documents postmarked the due date but received on a later date will not be accepted. Each applicant must ensure that the proposals are received by the above deadline.

Applicants must follow all instructions in the Solicitation Package. The original and ten copies of the application should be sent to: U.S. Department of State, SA–44, Bureau of Educational and Cultural Affairs, Ref.: ECA/PE/C–02–55, Program Management, ECA/EX/PM, Room 534, 301 4th Street, SW, Washington, DC 20547.

Applicants must also submit the ''Executive Summary'' and ''Proposal Narrative'' sections of the proposal on a 3.5'' diskette, formatted for DOS. These documents must be provided in ASCII text (DOS) format with a maximum line length of 65 characters. The Bureau will transmit these files electronically to the Public Affairs section at the US Embassy for its review, with the goal of reducing the time it takes to get embassy comments for the Bureau's grants review process.

Diversity, Freedom and Democracy Guidelines

Pursuant to the Bureau's authorizing legislation, programs must maintain a non-political character and should be balanced and representative of the diversity of American political, social, and cultural life. ''Diversity'' should be interpreted in the broadest sense and encompass differences including, but not limited to ethnicity, race, gender, religion, geographic location, socio-economic status, and physical challenges. Applicants are strongly encouraged to adhere to the advancement of this principle both in program administration and in program content. Please refer to the review criteria under the ''Support for Diversity'' section for specific suggestions on incorporating diversity into the total proposal. Public Law 104–319 provides that ''in carrying out programs of educational and cultural exchange in countries whose people do not fully enjoy freedom and democracy,'' the Bureau ''shall take appropriate steps to provide opportunities for participation in such programs to human rights and democracy leaders of such countries.'' Public Law 106–113 requires that the governments of the countries described above do not have inappropriate influence in the selection process. Proposals should reflect advancement of these goals in their program contents, to the full extent deemed feasible.

Review Process

The Bureau will acknowledge receipt of all proposals and will review them for technical eligibility. Proposals will be deemed ineligible if they do not fully adhere to the guidelines stated herein and in the Solicitation Package. The Program Office and the Public Diplomacy section overseas will review all eligible proposals. Eligible proposals will be subject to compliance with Federal and Bureau regulations and guidelines and forwarded to Bureau grant panels for advisory review. Proposals may also be reviewed by the Office of the Legal Adviser or by other Department elements. Final funding decisions are at the discretion of the Department of State's Assistant Secretary for Educational and Cultural Affairs. Final technical authority for assistance awards resides with the Bureau's Grants Officer.

Review Criteria

Technically eligible applications will be competitively reviewed according to the criteria stated below. These criteria are not rank ordered and all carry equal weight in the proposal evaluation:

1. *Quality of the program idea:* Proposals should exhibit originality, substance, precision, and relevance to the Bureau's mission.

2. *Program planning:* Detailed agenda and relevant work plan should demonstrate substantive undertakings and logistical capacity. Agenda and plan should adhere to the program overview and guidelines described above.

3. *Ability to achieve program objectives:* Objectives should be reasonable, feasible, and flexible. Proposals should clearly demonstrate how the institution will meet the program's objectives and plan.

4. *Multiplier effect/impact:* Proposed programs should strengthen long-term mutual understanding, including maximum sharing of information and establishment of long-term institutional and individual linkages.

5. *Support of Diversity:* Proposals should demonstrate substantive support of the Bureau's policy on diversity. Achievable and relevant features should be cited in both program administration (selection of participants, program venue and program evaluation) and program content (orientation and wrap-up sessions, program meetings, resource materials and follow-up activities).

6. *Institutional Capacity:* Proposed personnel and institutional resources should be adequate and appropriate to achieve the program or project's goals.

7. *Institution's Record/Ability:* Proposals should demonstrate an institutional record of successful exchange programs, including responsible fiscal management and full compliance with all reporting requirements for past Bureau grants as determined by Bureau Grant Staff. The Bureau will consider the past performance of prior recipients and the demonstrated potential of new applicants.

8. *Follow-on Activities:* Proposals should provide a plan for continued follow-on activity (without Bureau support) ensuring that Bureau supported programs are not isolated events.

9. *Project Evaluation:* Proposals should include a plan to evaluate the activity's success, both as the activities unfold and at the end of the program. A draft survey questionnaire or other technique plus description of a methodology to be used to link outcomes to original project objectives is recommended. Intermediate reports after each project phase or quarterly reports are required.

10. *Cost-effectiveness/Cost-sharing:* The overhead and administrative components of the proposal, including salaries and honoraria, should be kept as low as possible. All other items should be necessary and appropriate. Proposals should maximize cost sharing through other private sector support as well as institutional direct funding contributions.

11. *Value to U.S.-Partner Country Relations:* Proposed projects should receive positive assessments by the U.S. Department of State's geographic area desk and overseas officers of program need, potential impact, and significance in the partner country(ies).

Authority: Overall grant making authority for this program is contained in the Mutual Educational and Cultural Exchange Act of 1961, Pub. L. 87–256, as amended, also known as the Fulbright-Hays Act. The purpose of the Act is ''to enable the Government of the United States to increase mutual understanding between the people of the United States and the people of other countries * * * to strengthen the ties which unite us with other nations by demonstrating the educational and cultural interests, developments, and achievements of the people of the United States and other nations * * * and thus to assist in the development of friendly, sympathetic and peaceful relations between the United States and the other countries of the world.'' The funding authority for the program above is provided through legislation.

Notice

The terms and conditions published in this RFGP are binding and may not be modified by any Bureau representative. Explanatory information provided by the Bureau that contradicts published language will not be binding. Issuance of the RFGP does not constitute an award commitment on the part of the Government. The Bureau reserves the right to reduce, revise, or increase proposal budgets in accordance with the needs of the program and the availability of funds. Awards made will be subject to periodic reporting and evaluation requirements.

Notification

Final awards cannot be made until funds have been appropriated by Congress, allocated and committed through internal Bureau procedures.

Dated: January 25, 2002.

Patricia S. Harrison,

Assistant Secretary for Educational and Cultural Affairs, U.S. Department of State.

[FR Doc. 02–2420 Filed 1–23–02; 8:45 am]

BILLING CODE 4710–05–P

DEPARTMENT OF STATE

[Public Notice 3900]

Office of International Energy and Commodities Policy; Notice of Receipt of Application for a Presidential Permit for Pipeline Facilities To Be Constructed and Maintained on the Border of the United States

AGENCY: Department of State.

Notice is hereby given that the Department of State has received an application from Reef International, L.L.C. (Reef) for a Presidential permit, pursuant to Executive Order 11423 of August 16, 1968, as amended by Executive Order 12847 of May 17, 1993, authorizing the construction, connection, operation, and maintenance at the U.S.-Mexican border at Eagle Pass, Texas of a liquid pipeline carrying liquefied petroleum gas, including propane and butane, and related facilities.

Reef is a limited liability corporation organized and existing under the laws of the State of Texas and with its principal office located in Corpus Christi, Texas. The proposed new 6-inch diameter pipeline would originate at a proposed new transfer and blending station in Eagle Pass, Texas and cover approximately 5 miles, crossing under the Rio Grande River and terminating at a proposed new storage and unloading station in Coahuila, Mexico approximately 1,000 feet from the International Boundary. It is anticipated that initial deliveries of the propane/butane mixture will be approximately 500,000 GPD, increasing to approximately 2,000,000 GPD in two years.

As required by E.O. 11423, the Department of State is circulating this application to concerned agencies for comment.

DATES: Interested parties are invited to submit, in duplicate, comments relative to this proposal on or before March 4, 2002, to James Dudley, Office of International Energy and Commodities Policy, Department of State, Washington, DC 20520. The application and related documents that are part of the record to be considered by the Department of State in connection with this application are available for inspection in the Office of International Energy and Commodities Policy during normal business hours.

FOR FURTHER INFORMATION CONTACT: James Dudley, Office of International Energy and Commodities Policy, Department of State, Washington, DC 20520; or by telephone at (202) 647–2857; or by fax at (202) 647–4037.

Dated: January 25, 2002.

Stephen J. Gallogly,

Director, Office of International Energy and Commodities Policy.

[FR Doc. 02–2419 Filed 1–30–02; 8:45 am]

BILLING CODE 4710–07–P

DEPARTMENT OF TRANSPORTATION

Office of the Secretary

Aviation Proceedings, Agreements Filed During the Week Ending January 18, 2002

The following Agreements were filed with the Department of Transportation under provisions of 49 U.S.C. Sections 412 and 414. Answers may be filed within 21 days after the filing of the application.

Docket Number: OST–2002–11336.
Date Filed: January 16, 2002.
Parties: Members of the International Air Transport Association.
Subject: PTC COMP 0891 dated 18 January 2002, Mail Vote 192—Resolution 024d, Amend rounding units for the Romanian Leu, Intended effective date: 1 February 2002.

Docket Number: OST–2002–11357.
Date Filed: January 17, 2002.
Parties: Members of the International Air Transport Association.
Subject: PTC123 0172 dated 18 January 2002, Mail Vote 193—Resolution 010v, Special Amending Resolution—Korea (Rep. of), Intended effective date: 1 February 2002.

Dorothy Y. Beard,

Federal Register Liaison.

[FR Doc. 02–2355 Filed 1–30–02; 8:45 am]

BILLING CODE 4910–62–P

DEPARTMENT OF TRANSPORTATION

Office of the Secretary

Notice of Applications for Certificates of Public Convenience and Necessity and Foreign Air Carrier Permits Filed Under Subpart B (formerly Subpart Q) During the Week Ending January 18, 2002

The following Applications for Certificates of Public Convenience and Necessity and Foreign Air Carrier Permits were filed under Subpart B (formerly Subpart Q) of the Department of Transportation's Procedural Regulations (See 14 CFR 301.201 *et seq.*). The due date for Answers, Conforming Applications, or Motions to Modify Scope are set forth below for each application. Following the Answer period, DOT may process the application by expedited procedures. Such procedures may consist of the adoption of a show-cause order, a tentative order, or in appropriate cases a final order without further proceedings.

Docket Number: OST–2002–11335.
Date Filed: January 15, 2002.

Due Date for Answers, Conforming Applications, or Motion to Modify Scope: February 5, 2002.

Description: Application of Piedmont Aviation Services, Inc., d/b/a Pace Airlines (PASI), requesting the Department to disclaim jurisdiction and reissue its certificates in the name of Pace Airlines, Inc. (PACE). In the alternative, PASI requests that the Department approve the transfer of PASI's certificates of public convenience and necessity and other operating authority to PACE with an effective date of no later than January 25, 2002.

Dorothy Y. Beard,

Federal Register Liaison.

[FR Doc. 02–2354 Filed 1–30–02; 8:45 am]

BILLING CODE 4910–62–P

DEPARTMENT OF TRANSPORTATION

Federal Aviation Administration

Proposed Revisions to Advisory Circular—Flight Test Guide for Certification of Transport Category Airplanes

AGENCY: Federal Aviation Administration, DOT.

ACTION: Notice of proposed advisory circular revision and request for comments.

SUMMARY: This notice requests comments regarding proposed revisions to Advisory Circular (AC) 25–7A, ''Flight Test Guide for Certification of Transport Category Airplanes.'' This AC provides guidance on acceptable means, but not the only means, of demonstrating compliance with certain airworthiness standards for transport category airplanes. The proposed revisions to the AC complement proposed revisions to the airworthiness standards for transport category airplanes, published by separate document in the **Federal Register** on January 14, 2002 (67 FR 1846). This notice provides interested persons an opportunity to comment on the proposed revisions to the AC concurrently with the proposed rulemaking. Like all ACs, it is not mandatory, but is to provide guidance for applicants in demonstrating compliance with the objective safety standards set forth in the related rule.

DATES: Comments must be received by April 1, 2002.

ADDRESSES: Send all comments on the proposed AC revisions to the Federal Aviation Administration, Attention: Don Stimson, Airplane and Flight Crew Interface Branch, ANM–111, Transport Airplane Directorate, Aircraft Certification Service, 1601 Lind Ave. SW., Renton, WA 98055–4056. Comments may be examined at the above address between 7:30 a.m. and 4 p.m. weekdays, except Federal holidays.

FOR FURTHER INFORMATION CONTACT: Susan Boylon, Program Management Branch, ANM–114, at the above address, telephone (425) 227–1152, or facsimile (425) 227–1320.

SUPPLEMENTARY INFORMATION:

Comments Invited

Interested persons are invited to comment on the proposed revisions to the AC by submitting such written data, views, or arguments, as they may desire. Commenters must identify the title of the AC and submit comments in duplicate to the address specified above. All comments received on or before the closing date for comments will be considered by the Transport Airplane Directorate before issuing the revised AC.

Discussion

In a separate document published in the **Federal Register** on January 14, 2002 (67 FR 1846), the FAA proposes to amend the airworthiness standards for transport category airplanes concerning miscellaneous flight requirements. We initiated the proposal under the ''Fast Track Harmonization Program'' November 26, 1999 (64 FR 66522). Adopting that proposal would eliminate regulatory differences between the airworthiness standards of the U.S. and the Joint Aviation Requirements of Europe, without affecting current industry design practices.

In addition to the amendments proposed in Notice 02–01, the FAA also proposes to revise Advisory Circular (AC) 25–7A, ''Flight Test Guide for Certification of Transport Category Airplanes,'' to provide additional guidance concerning takeoff path, lateral control, trim (longitudinal), trim (airplanes with four or more engines), and demonstration of static longitudinal stability. This proposed revision to AC 25–7A should not be confused with other proposed revisions of AC 25–7A on which the FAA is currently seeking comments. This revision only addresses guidance material associated with these specific airworthiness requirements. Issuance of a revised AC based on this proposal is contingent on adoption of the revisions to part 25 in Notice 02–01.

Proposed Revisions to AC 25–7A

1. *Add a new paragraph, 12a(1)(iii) to read as follows:*

(iii) The height references in § 25.111 should be interpreted as geometrical heights.

2. *Revise paragraph 12e(2) to read as follows:*

(2) Procedures. The time between liftoff and the initiation of gear retraction during takeoff distance demonstrations should not be less than that necessary to establish an indicated positive rate of climb plus one second. For the purposes of flight manual expansion, the average demonstrated time delay between liftoff and initiation of gear retraction may be assumed; however, this value should not be less than 3 seconds.

3. *Revise paragraph 22a(2) to read as follows:*

(2) Sections 25.147(c) and (e) require an airplane to be easily controllable with the critical engine(s) inoperative. Section 25.147(d) further requires that lateral control be sufficient to provide a roll rate necessary for safety, without excessive control forces or travel, at the speeds likely to be used with one engine inoperative. Compliance can normally be demonstrated in the takeoff configuration at V_2 speed, because this condition is usually the most critical. Normal operation of a yaw stability augmentation system (SAS) should be considered in accordance with normal operating procedures. Roll response, § 25.147(e), should be satisfactory for takeoff, approach, landing, and high speed configurations. Any permissible configuration that could affect roll response should be evaluated.

4. *Revise paragraph 22b as follows:*

b. Procedures. The following test procedures outline an acceptable means for demonstrating compliance with § 25.147.

5. *Revise paragraph 22b(4) to read as follows:*

(4) *Lateral Control—Roll Capability, § 25.147(d).*

(i) Configuration:

(A) Maximum takeoff weight.

(B) Most aft c.g. position.

(C) Wing flaps in the most critical takeoff position.

(D) Landing gear retracted.

(E) Yaw SAS on, and off, if applicable.

(F) Operating engine(s) at maximum takeoff power.

(G) The inoperative engine that would be most critical for controllability, with the propeller feathered, if applicable.

(ii) Test Procedure: With the airplane in trim, or as nearly as possible in trim, for straight flight at V_2, establish a steady 30 degree banked turn. It should be demonstrated that the airplane can be rolled to a 30 degree bank angle in the other direction in not more than 11 seconds. In this demonstration, the

rudder may be used to the extent necessary to minimize sideslip. The demonstration should be made in the most adverse direction. The maneuver may be unchecked. Care should be taken to prevent excessive sideslip and bank angle during the recovery.

6. *Revise paragraph 22b(4) by renumbering it as paragraph 22b(5) as follows:*

(5) *Lateral Control—Four or More Engines, § 25.147(e).*

7. *Revise paragraph 22b(5) by renumbering it as paragraph 22b(6) as follows:*

(6) *Lateral Control—All Engines Operating, § 25.147(f).*

Issued in Renton, Washington, on December 19, 2001.

Ali Bahrami,

Acting Manager, Transport Airplane Directorate, Aircraft Certification Service.

[FR Doc. 02–1003 Filed 1–30–02; 8:45 am]

BILLING CODE 4910–13–P

DEPARTMENT OF TRANSPORTATION

Federal Aviation Administration

Notice of Intent To Request Renewal From the Office of Management and Budget (OMB) of Five Current Public Collections of Information

AGENCY: Federal Aviation Administration (FAA), DOT.

ACTION: Notice.

SUMMARY: In compliance with the Paperwork Reduction Act (44 U.S.C. 3501 et seq.), the FAA invites public comment on five currently approved public information collections which will be submitted to OMB for renewal.

DATES: Comments must be received on or before April 1, 2002.

ADDRESSES: Comments may be mailed or delivered to the FAA at the following address: Ms. Judy Street, Room 613, Federal Aviation Administration, Standards and Information Division, APF–100, 800 Independence Ave., SW., Washington, DC 20591.

FOR FURTHER INFORMATION CONTACT: Ms. Judy Street at the above address or on (202) 267–9895.

SUPPLEMENTARY INFORMATION: In accordance with the Paperwork Reduction Act of 1995, an agency may not conduct or sponsor, and a person is not required to respond to a collection of information unless it displays a currently valid OMB control number. Therefore, the FAA solicits comments on the following current collections of information in order to evaluate the necessity of the collection, the accuracy of the agency's estimate of the burden, the quality, utility, and clarity of the information to be collected, and possible ways to minimize the burden of the collection in preparation for submission to renew the clearances of the following information collections.

1. *2120–0003, Malfunction or Defect Report.* Collection of this information permits the FAA to evaluate its certification standards, maintenance programs, and regulatory requirements since their effectiveness is reflected in the number of equipment failures or the lack thereof. It is also the basis for issuance of Airworthiness Directives designed to prevent unsafe conditions or accidents. The affected public includes aircraft and repair station operators. The current estimated annual reporting burden is 6,935 hours.

2. *2120–0027, Application for Certificate of Waiver or Authorization.* Part A of Subtitle VII of the Revised Title 49 United States Code authorizes the issuance of regulations governing the use of navigable airspace. 14 CFR 91, 101, and 105 prescribe regulations governing the general operation and flight of aircraft, moored balloons, kites, unmanned rockets, unmanned free balloons, and parachute jumping. Applicants are individual airmen, state and local governments, and businesses who have a need to deviate from the provisions of these regulations. The current estimated annual reporting burden is 12,202 hours.

3. *2120–0507, Special Federal Aviation Regulation (SFAR) 36, Development of Major Repair Data.* SFAR 36 (to part 121) relieves qualifying applicants (Aircraft Maintenance, Commercial Aviation, Aircraft Repair Stations, Air Carriers, Air Taxi, and Commercial Operators) of the burden to obtain FAA approval of data developed by them for major repairs on a case-by-case basis, and provides for one-time approvals. The current estimated annual reporting burden is 530 hours.

4. *2120–0574, Aviation Safety Counselor of the Year Competition.* The form is used to select nominees for recognition of their volunteer services to the FAA. The agency will use the information on the form to select nine regional winners and one national winner among private citizens involved in aviation. The current estimated annual reporting burden is 180 hours.

5. *2120–0644, License Requirements for Operation of a Launch Site.* The information to be collected includes data required for performing launch site location analyses. This data is necessary in order to demonstrate to the Associate Administrator for Space Transportation/FAA that the proposed activity meets applicable public safety, national security, and foreign policy interests of the United States. A launch site is valid for a period of five years. Respondents are licensees authorized to operate sites. The current estimated annual reporting burden is 1592 hours.

Issued in Washington, DC, on January 24, 2002.

Steve Hopkins,

Manager, Standards and Information Division, APF–100.

[FR Doc. 02–2282 Filed 1–30–02; 8:45 am]

BILLING CODE 4910–13–M

DEPARTMENT OF TRANSPORTATION

Federal Aviation Administration

Third Party War Risk Liability Insurance

AGENCY: Federal Aviation Administration, DOT.

ACTION: Notice of extension.

SUMMARY: This notice contains the text of a memo from the Secretary of Transportation to the President regarding the extension of the provision of aviation insurance coverage for U.S. flag commercial air carrier service in domestic and international operations.

DATES: Dates of extension from January 20, 2002 through March 20, 2002.

FOR FURTHER INFORMATION CONTACT: Helen Kish, Program Analyst, APO–3, or Eric Nelson, Program Analyst, APO–3, Federal Aviation Administration, 800 Independence Ave., SW., Washington, DC 20591, telephone 202–267–9943 or 202–267–3090. Or online at *FAA Insurance Website: http://api.hq.faa.gov/911policies/inscover.html.*

SUPPLEMENTARY INFORMATION: On January 4, 2002, the Secretary of Transportation authorized a 60-day extension of aviation insurance provided by the Federal Aviation Administration as follows:

Memorandum to the President

''Pursuant to the authority delegated to me in paragraph (3) of Presidential Determination No. 01–29 of September 23, 2001, I have extended that determination to allow for the provision of aviation insurance and reinsurance coverage for U.S. Flag commercial air service in domestic and international operations for an additional 60 days.

Pursuant to section 44306(c) of chapter 443 of 49 U.S.C.—Aviation Insurance, the period for provision of insurance shall be extended from January 20, 2002, through March 20, 2002.''

/s/Norman Y. Mineta

Affected Public: Air Carriers who currently have Third Party War-Risk Liability Insurance with the Federal Administration.

Issued in Washington, DC, on January 24, 2002.

Nan Shellabarger,

Deputy Director, Office of Aviation Policy and Plans.

[FR Doc. 02–2279 Filed 1–30–02; 8:45 am]

BILLING CODE 4910–13–M

DEPARTMENT OF TRANSPORTATION

Federal Aviation Administration

RTCA Special Committee 187: Mode Select Beacon and Data Link System

AGENCY: Federal Aviation Administration (FAA), DOT.

ACTION: Notice of RTCA Special Committee 187 meeting.

SUMMARY: The FAA is issuing this notice to advise the public of a meeting of RTCA Special Committee 187: Mode Select Beacon and Data Link System.

DATES: The meeting will be held February 19–20, 2002, from 9 a.m. to 5 p.m.

ADDRESSES: The meeting will be held at RTCA, 1828 L Street, NW., Suite 805, Washington, DC 20036.

FOR FURTHER INFORMATION CONTACT: RTCA Secretariat, 1828 L Street, NW., Washington, DC 20036; telephone (202) 833–9339; fax (202) 833–9434; Web site *http://www.rtca.org*.

SUPPLEMENTARY INFORMATION: Pursuant to section 10(a)(2) of the Federal Advisory Committee Act (Pub. L. 92–463, 5 U.S.C., Appendix 2), notice is hereby given for a Special Committee 187 meeting. The agenda will include:

- February 19–20:
- Opening Session (Chairman's Introductory Remarks, Review and Approve Agenda, Approve Previous Meeting Minutes).
- Review Revision C—Proposed Change 1 to RTCA DO–181C, RTCA Paper No. 016–02/SC187–047, *Addition of Hijack Mode Operations*.
- Closing Session (Other Business, Date and Time of Next Meeting, Adjourn).

Attendance is open to the interested public but limited to space availability. With the approval of the chairmen, members of the public may present oral statements at the meeting. Persons wishing to present statements or obtain information should contact the person listed in the **FOR FURTHER INFORMATION CONTACT** section. Members of the public may present a written statement to the committee at any time.

Issued in Washington, DC, on January 23, 2002.

Janice L. Peters,

FAA Special Assistant, RTCA Advisory Committee.

[FR Doc. 02–2409 Filed 1–30–02; 8:45 am]

BILLING CODE 4910–13–M

DEPARTMENT OF TRANSPORTATION

Federal Aviation Administration

Notice of Intent To Rule on Application 02–05–C–00–CAK To Impose and Use the Revenue From a Passenger Facility Charge (PFC) at Akron-Canton Regional Airport, North Canton, Ohio

AGENCY: Federal Aviation Administration (FAA), DOT.

ACTION: Notice of intent to rule on application.

SUMMARY: The FAA proposes to rule and invites public comment on the application to impose and use the revenue from a PFC at Akron-Canton Regional Airport under the provisions of the 49 U.S.C. 40117 and Part 158 of the Federal Aviation Regulations (14 CFR Part 158).

DATES: Comments must be received on or before March 4, 2002.

ADDRESSES: Comments on this application may be mailed or delivered in triplicate to the FAA at the following address:

Federal Aviation Administration, Detroit Airports District Office, Willow Run Airport, East, 8820 Beck Road, Belleville, Michigan 48111. The application may be reviewed in person at this location.

In addition, one copy of any comments submitted to the FAA must be mailed or delivered to Mr. Richard B. McQueen, Akron-Canton Regional Airport at the following address: Akron-Canton Regional Airport, 5400 Lauby Road, #9, North Canton, Ohio 44720.

Air carriers and foreign air carriers may submit copies of written comments previously provided to the Akron-Canton Regional Airport Authority under section 158.23 of Part 158.

FOR FURTHER INFORMATION CONTACT: Ms. Arlene B. Draper, Program Manager, Federal Aviation Administration, Detroit Airports District Office, Willow Run Airport, East, 8820 Beck Road, Belleville, Michigan 48111 (734–487–7282). The application may be reviewed in person at this same location.

SUPPLEMENTARY INFORMATION: The FAA proposes to rule and invites public comment on the application to impose and use the revenue from a PFC at Akron-Canton Regional Airport under the provisions of the 49 U.S.C. 40117 and Parts 158 of the Federal Aviation Regulations (14 CFR Part 158).

On December 21, 2001, the FAA determined that the application to impose and use the revenue from a PFC submitted by Akron-Canton Regional Airport Authority was substantially complete within the requirements of section 158.25 of Part 158. The FAA will approve or disapprove the application, in whole or in part, not later than April 9, 2002.

The following is a brief overview of the application.

Proposed charge effective date: September 1, 2002.

Proposed charge expiration date: November 1, 2007.

Level of the proposed PFC: $4.50.

Total estimated PFC revenue: $8,277,000.

Brief description of proposed projects: Impose and Use: Property Acquisition—Nickison, Lockhart, Tucker, Peters, Snow Removal Equipment, Passenger Loading Bridge, Engine Generator-Back-up Power, Runway 5/23 Overlay, Entrance Road Rehabilitation, Terminal Baggage Claim Expansion, Terminal Expansion/Rehabilitation, Shift/Extension Runway 1/19 Phase II, Airport Access Improvement—Shuffel Road Interchange.

Use Only: Relocate Mount Pleasant and Frank Roads, Runway 1 Extension, Runway 19 Runway Safety Area Improvements. Class or classes of air carriers which the public agency has requested to be required to collect PFCs: air taxi/commercial operators.

Any person may inspect the application in person at the FAA office listed above under **FOR FURTHER INFORMATION CONTACT.**

In addition, any person may, upon request, inspect the application, notice and other documents germane to the application in person at the Akron-Canton Regional Airport, 5400 Lauby Road, #9, North Canton, Ohio 44720.

Issued in Des Plaines, Illinois, on January 18, 2002.

Mark A. McClardy,

Acting Manager, Planning/Programming Branch, Airports Division, Great Lakes Region.

[FR Doc. 02–2280 Filed 1–30–02; 8:45 am]

BILLING CODE 4910–13–M

DEPARTMENT OF TRANSPORTATION

Federal Aviation Administration

Intent To Rule on Application 02–13–U–00–ORD To Use the Revenue From a Passenger Facility Charge (PFC) at Chicago O'Hare International Airport, Chicago, Illinois

AGENCY: Federal Aviation Administration (FAA), DOT.

ACTION: Notice of Intent to Rule on application.

SUMMARY: The FAA proposes to rule and invites public comment on the application to use the revenue from a PFC at Chicago O'Hare International Airport under the provisions of the 49 U.S.C. 40117 and Part 158 of the Federal Aviation Regulations (14 CFR Part 158)

DATES: Comments must be received on or before March 4, 2002.

ADDRESSES: Comments on this application may be mailed or delivered in triplicate to the FAA at the following address:

Federal Aviation Administration, Chicago Airports District Office, 2300 East Devon Avenue, Room 320, Des Plaines, IL 60018.

In addition, one copy of any comments submitted to the FAA must be mailed or delivered to Mr. Thomas R. Walker, Commissioner of the City of Chicago Department of Aviation at the following address: Chicago O'Hare International Airport, P.O. Box 66142, Chicago, IL 60666.

Air carriers and foreign air carriers may submit copies of written comments previously provided to the City of Chicago Department of Aviation under section 158.23 of Part 158.

FOR FURTHER INFORMATION CONTACT: Mr. Philip M. Smithmeyer, Manager, Chicago Airports District Office, 2300 East Devon Avenue, Room 320, Des Plaines, IL 60018, (847) 294–7335. The application may be reviewed in person at this same location.

SUPPLEMENTARY INFORMATION: The FAA proposes to rule and invites public comment on the application to use the revenue from a PFC at Chicago O'Hare International Airport under the provisions of the 49 U.S.C. 40117 and Part 158 of the Federal Aviation Regulations (14 CFR Part 158).

On December 26, 2001, the FAA determined that the application to use the revenue from a PFC submitted by the City of Chicago Department of Aviation was substantially complete within the requirements of § 158.25 of Part 158. The FAA will approve or disapprove the application, in whole or in part, no later than April 4, 2002.

The following is a brief overview of the application.

Actual charge effective date: May 1, 2008.

Revised estimated charge expiration date: October 1, 2016.

Level of proposed PFC: $4.50.

Total estimated PFC revenue: $53,000,000.

Brief description of proposed project: Construct Touhy Avenue Reservoir, a 700 acre-feet stormwater reservoir on airport property directly north of Touhy Avenue and west of Mount Prospect Road.

Class or classes of air carriers which the public agency has requested not be required to collect PFCs: Air taxi operators.

Any person may inspect the application in person at the FAA office listed above under **FOR FURTHER INFORMATION CONTACT**.

In addition, any person may, upon request, inspect the application, notice and other documents germane to the application in person at the City of Chicago Department of Aviation.

Issued in Des Plaines, Illinois on January 18, 2002.

Mark A. McClardy,

Acting Manager, Planning/Programming Branch, Airports Division, Great Lakes Region.

[FR Doc. 02–2281 Filed 1–30–02; 8:45 am]

BILLING CODE 4910–13–M

DEPARTMENT OF TRANSPORTATION

Research and Special Programs Administration

Office of Hazardous Materials Safety; Notice of Applications for Exemptions

AGENCY: Research and Special Programs Administration, DOT.

ACTION: List of applicants for exemptions.

SUMMARY: In accordance with the procedures governing the application for, and the processing of, exemptions from the Department of Transportation's Hazardous Materials Regulations (49 CFR part 107, subpart B), notice is hereby given that the Office of Hazardous Materials Safety has received the applications described herein. Each mode of transportation for which a particular exemption is requested is indicated by a number in the ''Nature of Application'' portion of the table below as follows: 1—Motor vehicle, 2—Rail freight, 3—Cargo vessel, 4—Cargo aircraft only, 5—Passenger-carrying aircraft.

DATES: Comments must be received on or before March 4, 2002.

ADDRESSES: Records Center, Research and Special Programs, Administration, U.S. Department of Transportation, Washington, DC 20590.

Comments should refer to the application number and be submitted in triplicate. If confirmation of receipt of comments is desired, include a self-addressed stamped postcard showing the exemption application number.

FOR FURTHER INFORMATION CONTACT: Copies of the applications (See Docket Number) are available for inspection at the New Docket Management Facility, PL–401, at the U.S. Department of Transportation, Nassif Building, 400 7th Street, SW., Washington, DC 20590 or at *http://dms.dot.gov.*

This notice of receipt of applications for new exemptions is published in accordance with part 107 of the Federal hazardous materials transportation law (49 U.S.C. 5117(b); 49 CFR 1.53(b)).

Issued in Washington, DC, on January 25, 2002.

R. Ryan Posten,

Exemptions Program Officer, Office of Hazardous Materials, Exemptions and Approvals.

NEW EXEMPTIONS

Application No.	Docket No.	Applicant	Regulation(s) affected	Nature of exemption thereof
12897–N	RSPA–02–11397	ATK Thiokol Propulsion, Brigham City, UT.	49 CFR 173.242	To authorize the transportation in commerce of ammonium perchlorate, Division 5.1, in DOT 53 portable tanks not presently authorized. (Modes 1, 2.)

NEW EXEMPTIONS—Continued

Application No.	Docket No.	Applicant	Regulation(s) affected	Nature of exemption thereof
12898–N	RSPA–02–11398	SWS Environmental First Response, Panama City Beach, FL.	49 CFR 173.302, 173.304, 173.34	To authorize the manufacturing, marking, sale and use of a non-DOT specification salvage cylinder for overpacking damage or leaking cylinders of pressurized and non-pressurized hazardous materials for transportation in commerce. (Mode 1.)
12899–N	RSPA–02–11387	Pencor Reservoir Fluid Specialists, Broussard, LA.	49 CFR 173.201(c), 173.202(c), 173.203(c), 173.302(c), 173.302(a), 173.304(a) & (b), 175.3, 178.35(e) & (f), 178.36(a) & (b), (j), (1).	To authorize the manufacture, mark, sale and use of non-DOT specification cylinders comparable to DOT Specification 3A cylinders for use in transporting Division 2.1, 2.2 and Class 3 material. (Modes 1, 2, 3, 4.)
12902–N	RSPA–02–11389	C&S Railroad Corp., Jim Thrope, PA.	49 CFR 174.85(a)	To authorize the transportation in commerce of rail cars with alternative spacing between the locomotive and cars carrying hazardous materials. (Mode 2.)
12903–N	RSPA–02–11390	Cargill Inc., Minneapolis, MN	49 CFR 179.13	To authorize the transportation in commerce of Class 3 material in DOT Specification 111A100W1 tank cars having a maximum gross weight of 286,000 pounds. (Mode 2.)
12904–N	RSPA–02–11388	Chemex Corp., San Juan, PR	49 CFR 179.13	To authorize the transportation in commerce of Class 3 material in DOT Specification 111A100W1 tank cars having a maximum gross weight of 286,000 pounds. (Mode 2.)
12905–N	RSPA–02–11384	Railway Progress Institute, Inc. Alexandria, VA.	49 CFR 172.203(a), 172.302(c), 173.22a(a) & (b), 179.100–20(a), 179.200–24(a) & (b), 179.201–10(a), 179.220–25.	To authorize the transportation in commerce of various hazardous materials on rail cars without the required head stamping and without the exemption number on the rail car or the shipping paper. (Mode 2.)

[FR Doc. 02–2352 Filed 1–30–02; 8:45 am]
BILLING CODE 4910–60–M

DEPARTMENT OF TRANSPORTATION

Research and Special Programs Administration

Office of Hazardous Materials Safety; Notice of Applications for Modification of Exemption

AGENCY: Research and Special Programs Administration, DOT.

ACTION: List of applications for modification of exemptions.

SUMMARY: In accordance with the procedures governing the application for, and the processing of, exemptions from the Department of Transportation's Hazardous Materials Regulations (49 CFR part 107, subpart B), notice is hereby given that the Office of Hazardous Materials Safety has received the applications described herein. This notice is abbreviated to expedite docketing and public notice. Because the sections affected, modes of transportation, and the nature of application have been shown in earlier **Federal Register** publications, they are not repeated here. Requests for modifications of exemptions (e.g. to provide for additional hazardous materials, packaging design changes, additional mode of transportation, etc.) are described in footnotes to the application number. Application numbers with the suffix ''M'' denote a modification request. These applications have been separated from the new applications for exemptions to facilitate processing.

DATES: Comments must be received on or before February 15, 2002.

ADDRESSES COMMENTS TO: Records Center, Research and Special Programs, Administration, U.S. Department of Transportation, Washington, DC 20590.

Comments should refer to the application number and be submitted in triplicate. If confirmation of receipt of comments is desired, include a self-addressed stamped postcard showing the exemption number.

FOR FURTHER INFORMATION: Copies of the applications are available for inspection in the Records Center, Nassif Building, 400 7th Street SW., Washington, DC or at *http://dms.dot.gov*.

This notice of receipt of applications for modification of exemptions is published in accordance with part 107 of the Federal hazardous materials transportation law (49 U.S.C. 5117(b); 49 CFR 1.53(b)).

Issued in Washington, DC, on January 25, 2002.

R. Ryan Posten,

Exemptions Program Officer, Office of Hazardous Materials, Exemptions and Approvals.

Application No.	Docket No.	Applicant	Modification of Exemption
7657–M		Welker Engineering Company, SugarLand, TX (see Footnote 1)	7657
9221–M		Applied Companies, Valencia, CA (See Footnote 2)	9221
9880–M		GE Reuter-Stokes, Twinsburg, OH (See Footnote 3)	9880
9940–M		GE Reuter-Stokes, Twinsburg, OH (See Footnote 4)	9940
11316–M		TRW Automotive Occupant Safety Systems, Queen Creek, AZ (See Footnote 5)	11316
11803–M		Chart, Inc. (Storage Systems Div.), Plaistow, NH (See Footnote 6)	11803
12339–M	RSPA–99–6201	Air Products and Chemicals, Inc., Allentown, PA (See Footnote 7)	12339
12866–M	RSPA–01–11096	Delta Air Lines (Technical Operations Center), Atlanta, GA (See Footnote 8)	12866
12885–M	RSPA–01–11209	United States Dept. of Agriculture, Missoula, MT (See Footnote 9)	12885

(1) To modify the exemption to authorize the transportation of an additional Division 2.3 material in non-DOT specification cylinders.

(2) To modify the exemption to authorize cargo vessels as an additional mode for transporting Division 2.2 materials in non-DOT specification stainless steel cylinders.

(3) To modify the exemption to authorize the transportation of an additional Division 2.2 material in non-DOT specification containers described as hermetically sealed electron tube devices.

(4) To modify the exemptions to authorize the transportation of an additional 2.2 materials in non-DOT specification containers described as hermetically sealed electron tube devices.

(5) To modify the exemption to authorize the transportation of a Division 1.4G and additional 1.4S material for shipment to additional TRW facilities and to increase quantity of power devices or igniters per tray from 16 to 36.

(6) To modify the exemption to authorize an increase of the maximum gross weight on rail from 263,000 lbs. to 286,000 lbs. for the transportation of Division 2.2 materials in DOT Specification tank cars.

(7) To modify the exemption to authorize the transportation of an additional Division 2.3 material in DOT Specification 3AL aluminum cylinders via cargo vessel.

(8) To reissue the exemption orginally issued on an emergency basis and to remove certain special provisions/requirements for the non-DOT specification cylinders containing Division 2.2 materials that have inadvertently been mis-marked.

(9) To reissue the exemption orginally issued on an emergency basis for the transportation of gasoline in a non-DOT specification steel drum with a pump installed mounted in a helitorch frame.

[FR Doc. 02–2353 Filed 1–30–02; 8:45 am]

BILLING CODE 4910–60–M

DEPARTMENT OF THE TREASURY

Internal Revenue Service

[REG–242282–97]

Proposed Collection: Comment Request for Regulation Project

AGENCY: Internal Revenue Service (IRS), Treasury.

ACTION: Notice and request for comments.

SUMMARY: The Department of the Treasury, as part of its continuing effort to reduce paperwork and respondent burden, invites the general public and other Federal agencies to take this opportunity to comment on proposed and/or continuing information collections, as required by the Paperwork Reduction Act of 1995, Public Law 104–13(44 U.S.C. 3506(c)(2)(A)). Currently, the IRS is soliciting comments concerning an existing final regulation, REG–242282–97 (TD 8734), General Revision of Regulations Relating to Withholding of Tax On Certain U.S. Source Income Paid to Foreign Persons and Related Collection, Refunds and Credits; Revision of Information Reporting and Backup Withholding Regulations; and Removal of Regulations Under Part 35a and of Certain Regulations Under Income Tax Treaties (1.1441–1(e), 1.1441–4(a)(2), 1.1441–4(b)(1) and (2), 1.1441–4(c), (d), and (e), 1.1441–5(b)(2)(ii), 1.1441–5(c)(1), 1.1441–6(b) and (c), 1.1441–8(b), 1.1441–9(b), 1.1461–1(b) and (c), 301.6114–1, 301.6402–3(e), and 31.3401(a)(6)–1(e)).

DATES: Written comments should be received on or before April 1, 2002, to be assured of consideration.

ADDRESSES: Direct all written comments to George Freeland, Internal Revenue Service, room 5244, 1111 Constitution Avenue, NW., Washington, DC 20224.

FOR FURTHER INFORMATION CONTACT: Requests for additional information or copies of the regulation should be directed to Larnice Mack, (202) 622–3179, or through the internet (*Larnice.Mack@irs.gov*), Internal Revenue Service, room 5244, 1111 Constitution Avenue, NW., Washington, DC 20224.

SUPPLEMENTARY INFORMATION:

Title: General Revision of Regulations Relating to Withholding of Tax on Certain U.S. Source Income Paid to Foreign Persons and Related Collection, Refunds and Credits; Revision of Information Reporting and Backup Withholding Regulations; and Removal of Regulations Under Part 35a and of Certain Regulations Under Income Tax Treaties.

OMB Number: 1545–1484.

Regulation Project Number: REG–242282–97 (formerly INTL–62–90; INTL–32–93; INTL–52–86; INTL–52–94).

Abstract: This regulation prescribes collections of information for foreign persons that received payments subject to withholding under sections 1441, 1442, 1443, or 6114 of the Internal Revenue Code. This information is used to claim foreign person status and, in appropriate cases, to claim residence in a country with which the United States has an income tax treaty in effect, so that withholding at a reduced rate of tax may be obtained at source. The regulation also prescribes collections of information for withholding agents. This information is used by withholding agents to report to the IRS income paid to a foreign person that is subject to withholding under Code sections 1441, 1442, and 1443. The regulation also requires that a foreign taxpayer claiming a reduced amount of withholding tax under the provisions of an income tax treaty must disclose its reliance upon a treaty provision by filing Form 8833 with its U.S. income tax return.

Current Actions: There is no change to this existing regulation.

Type of Review: Extension of a currently approved collection.

Affected Public: Business or other for-profit organizations, individuals or households, not-for-profit institutions, farms, and Federal, state, local or tribal governments.

The burden for the reporting requirements is reflected in the burden of Forms W–8BEN, W08ECI, W–8EXP,

W–8IMY, 1042, 1042S, 8233, 8833, and the income tax return of a foreign person filed for purposes of claiming a refund of tax.

An agency may not conduct or sponsor, and a person is not required to respond to, a collection of information unless the collection of information displays a valid OMB control number. Books or records relating to a collection of information must be retained as long as their contents may become material in the administration of any internal revenue law. Generally, tax returns and tax return information are confidential, as required by 26 U.S.C. 6103.

Request for Comments: Comments submitted in response to this notice will be summarized and/or included in the request for OMB approval. All comments will become a matter of public record. Comments are invited on: (a) Whether the collection of information is necessary for the proper performance of the functions of the agency, including whether the information shall have practical utility; (b) the accuracy of the agency's estimate of the burden of the collection of information; (c) ways to enhance the quality, utility, and clarity of the information to be collected; (d) ways to minimize the burden of the collection of information on respondents, including through the use of automated collection techniques or other forms of information technology; and (e) estimates of capital or start-up costs and costs of operation, maintenance, and purchase of services to provide information.

Approved: January 24, 2002.

George Freeland,

IRS Reports Clearance Officer.

[FR Doc. 02–2418 Filed 1–30–02; 8:45 am]

BILLING CODE 4830–01–P

DEPARTMENT OF THE TREASURY

Office of Thrift Supervision

Submission for OMB Review; Comment Request

AGENCY: Office of Thrift Supervision (OTS), Treasury.

ACTION: Notice and request for comment.

SUMMARY: The proposed information collection requirement described below has been submitted to the Office of Management and Budget (OMB) for review, as required by the Paperwork Reduction Act of 1995. OTS is soliciting public comments on the proposal.

DATES: Submit written comments on or before March 4, 2002.

ADDRESSES: Send comments, referring to the collection by title of the proposal or by OMB approval number, to OMB and OTS at these addresses: Alexander Hunt, Office of Information and Regulatory Affairs, Office of Management and Budget, Room 10202, New Executive Office Building, Washington, DC 20503, or e-mail to *ahunt@omb.eop.gov;* and Information Collection Comments, Chief Counsel's Office, Office of Thrift Supervision, 1700 G Street, NW., Washington, DC 20552, fax to (202) 906–6518, or e-mail to *infocollection.comments@ots.treas.gov.* OTS will post comments and the related index on the OTS Internet Site at *www.ots.treas.gov.* In addition, interested persons may inspect comments at the Public Reading Room, 1700 G Street, NW., by appointment. To make an appointment, call (202) 906–5922, send an e-mail to *publicinfo@ots.treas.gov*, or send a facsimile transmission to (202) 906–7755.

FOR FURTHER INFORMATION CONTACT: To obtain a copy of the submission to OMB, contact Sally W. Watts at *sally.watts@ots.treas.gov*, (202) 906–7380, or facsimile number (202) 906–6518, Regulations and Legislation Division, Chief Counsel's Office, Office of Thrift Supervision, 1700 G Street, NW., Washington, DC 20552.

SUPPLEMENTARY INFORMATION: OTS may not conduct or sponsor an information collection, and respondents are not required to respond to an information collection, unless the information collection displays a currently valid OMB control number. As part of the approval process, we invite comments on the following information collection.

Title of Proposal: Minority Thrift Certification Form.

OMB Number: 1550–0096.

Form Number: OTS Form 1661.

Description: This information is needed to help OTS remain a reliable source of information regarding the universe of minority-owned thrifts, in accordance with our responsibilities under Section 308 of the Financial Information Reform, Recovery and Enforcement Act of 1989 (12 U.S.C. 1463 note).

Type of Review: Renewal.

Affected Public: Savings Associations.

Estimated Number of Respondents: 32.

Estimated Frequency of Response: Annually.

Estimated Burden Hours per Response: .5 hours.

Estimated Total Burden: 16 hours.

Clearance Officer: Sally W. Watts, (202) 906–7380, Office of Thrift Supervision, 1700 G Street, NW., Washington, DC 20552.

OMB Reviewer: Alexander Hunt, (202) 395–7860, Office of Management and Budget, Room 10202, New Executive Office Building, Washington, DC 20503.

Dated: January 24, 2002.

Deborah Dakin,

Deputy Chief Counsel, Regulations and Legislation Division.

[FR Doc. 02–2320 Filed 1–30–02; 8:45 am]

BILLING CODE 6720–01–P

DEPARTMENT OF VETERANS AFFAIRS

Means Test Thresholds

AGENCY: Department of Veterans Affairs.

ACTION: Notice.

SUMMARY: As required by law, the Department of Veterans Affairs (VA) is hereby giving notice of cost-of-living adjustments (COLA) for means test income limitations. These adjustments are based on the rise in the Consumer Price Index (CPI) during the one-year period ending September 30, 2001.

DATES: These rates are effective January 1, 2002.

FOR FURTHER INFORMATION CONTACT: Roscoe Butler, Chief Policy and Operations, Health Administration Service, (10C3), Veterans Health Administration, VA, 810 Vermont Avenue, NW., Washington, DC 20420, (202) 273–8302. (This is not a toll-free number.)

SUPPLEMENTARY INFORMATION: On January 1 of each year, the Secretary is authorized under Title 38 United States Code, section 1722 to increase the means test income threshold levels by the same percentage the maximum rates of pension benefits were increased under section 5312(a) during the preceding calendar year. The means test income thresholds are used by the Veterans Health Administration (VHA) to determine whether a veteran must agree to pay a copayment for hospital and outpatient medical care services. Based on a 2.6 percent increase in Pension Benefits effective December 1, 2001, and in accordance with 38 CFR 3.29, the following income limitations for the Means Test Thresholds will be effective January 1, 2002.

Table 1—Means Test Thresholds

(1) Veterans with no dependents:
(a) Below Means Test Threshold: $24,304
(a) Above Means Test Threshold: $24,305
(2) Veterans with 1 dependent:
(a) Below Means Test Threshold: $29,168
(a) Above Means Test Threshold: $29,169
(3) Veterans with 2 dependents:
(a) Below Means Test Threshold: $30,798
(a) Above Means Test Threshold: $30,799

(4) Veterans with 3 dependents:
(a) Below Means Test Threshold: $32,428
(a) Above Means Test Threshold: $32,429
(5) Veterans with 4 dependents:
(a) Above Means Test Threshold: $34,058
(a) Below Means Test Threshold: $34,059
(6) Veterans with 5 dependents:
(a) Above Means Test Threshold: $35,688
(a) Below Means Test Threshold: $35,689
(7) Child Income Exclusion is: $7,450
(8) The Medicare deductible is $812
(9) Maximum annual Rate of Pension effective 12/1/2001 are:
(a) The base rate is $9,556
(b) The base rate with one dependent is $12,516
(c) Add $1,630 for each additional dependent above 5

Below the Means Test Threshold is defined as those veterans whose attributable income and net worth is such that they are unable to defray the expenses of care and therefore are not subject to copay charges for hospital and outpatient medical services.

Above the Means Test Threshold is defined as those veterans whose attributable income and net worth is such that they are able to defray the expenses of care and must agree to pay a copayment for hospital care and outpatient medical services.

Dated: January 23, 2002.

Anthony J. Principi,

Secretary of Veterans Affairs.

[FR Doc. 02–2365 Filed 1–30–02; 8:45 am]

BILLING CODE 8320–01–P

Federal Register

Thursday,
January 31, 2002

Part II

Department of Justice

Immigration and Naturalization Service

8 CFR Part 103, et al.

New Classification for Victims of Severe Forms of Trafficking in Persons; Eligibility for "T" Nonimmigrant Status; Final Rule

DEPARTMENT OF JUSTICE

Immigration and Naturalization Service

8 CFR Parts 103, 212, 214, 274a and 299

INS No. 2132–01; AG Order No. 2554–2002

RIN 1115–AG19

New Classification for Victims of Severe Forms of Trafficking in Persons; Eligibility for ''T'' Nonimmigrant Status

AGENCY: Immigration and Naturalization Service, Department of Justice.

ACTION: Interim rule with request for comments.

SUMMARY: This rule is intended to assist all concerned Federal officials, including, but not limited to, officials of the Immigration and Naturalization Service (Service), and eligible applicants, in implementing provisions of section 107(e) of the Trafficking Victims Protection Act of 2000 (TVPA). The T nonimmigrant status is available to eligible victims of severe forms of trafficking in persons who have complied with any reasonable request for assistance in the investigation or prosecution of acts of trafficking in persons, and who can demonstrate that they would suffer extreme hardship involving unusual and severe harm if they were removed from the United States. This rule addresses: the essential elements that must be demonstrated for classification as a T nonimmigrant alien; the procedures to be followed by applicants to apply for T nonimmigrant status; and evidentiary guidance to assist in the application process. The Service will promulgate separate regulations concerning the process for adjusting from T nonimmigrant status to lawful permanent resident status.

DATES: *Effective date*: This interim rule is effective March 4, 2002.

Comment date: Written comments must be submitted on or before April 1, 2002.

ADDRESSES: Please submit written comments to the Immigration and Naturalization Service, Policy Directive and Instructions Branch, Attention: TVPA Implementation Team, 425 I Street, NW., Room 4034, Washington, DC 20536 by mail or email your comments to the VTVPA Implementation Team at *insregs@usdoj.gov.* When submitting comments electronically, please include ''INS No. 2132–01'' in the subject box.

To ensure proper handling, please reference INS No. 2132–01 on your correspondence or e-mail. Comments will be available for public inspection at the above address by calling (202) 514–3048 to arrange for an appointment.

FOR FURTHER INFORMATION CONTACT: Anne Veysey, Office of Programs, Immigration and Naturalization Service, 425 I Street, NW., Room 1000, Washington, DC 20536, telephone: (202) 514–3479.

SUPPLEMENTARY INFORMATION:

Background and Legislative Authority

The Victims of Trafficking and Violence Protection Act of 2000 (VTVPA), Pub. L. 106–386, was signed into law on October 28, 2000. The VTVPA is divided into three sections: Division A, the Trafficking Victims Protection Act (TVPA); Division B, the Violence Against Women Act of 2000 (VAWA); and Division C, Miscellaneous Provisions. In passing this legislation, Congress intended to create a broad range of tools necessary for the Federal government to address the particular concerns associated with the problem of trafficking in persons.

In the TVPA, Congress found that ''(a)t least 700,000 persons annually, primarily women and children, are trafficked within or across international borders. Approximately 50,000 women and children are trafficked into the United States each year.'' Section 102(b)(1), TVPA. Congress further found that ''(t)raffickers often transport victims from their home communities to unfamiliar destinations, including foreign countries away from family and friends, religious institutions, and other sources of protection and support(.)'' *Id.* at section 102(b)(5). In trafficking in persons situations, perpetrators often target individuals who are likely to be particularly vulnerable and unfamiliar with their surroundings. Congress's intentions in passing the TVPA were to further the humanitarian interests of the United States and to strengthen the ability of government officials to investigate and prosecute trafficking in persons crimes by providing temporary immigration benefits to victims.

In the TVPA, Congress provided a variety of means to combat trafficking in persons by ensuring just and effective punishment of traffickers and by protecting the victims of trafficking in persons. These means include providing immigration benefits to eligible aliens who have been victims of severe forms of trafficking in persons and, in the case of persons aged 15 and older, who comply with any reasonable request to assist law enforcement agencies in the investigation and prosecution of their traffickers. The TVPA addresses the effect of severe forms of trafficking in persons on victims, including many who may not have legal status and are reluctant to cooperate.

In order to develop a comprehensive Federal approach to identifying victims of severe forms of trafficking in persons, to provide them with benefits and services, and to enhance the Department of Justice's ability to prosecute traffickers and prevent trafficking in persons in the first place, the Service conducted a series of stakeholders' meetings with representatives from key Federal agencies; national, state, and local law enforcement associations; non-profit, community-based victim rights organizations; and other groups. Suggestions from these stakeholders were used in the drafting of this regulation. Additionally, the Department established an internal working group to oversee implementation of the new law.

In a variety of ways, the Department has attempted to protect potential victims of severe forms of trafficking in persons by encouraging witnesses to cooperate in the investigation and prosecution of traffickers. Through vigorous investigation and prosecution of severe forms of trafficking in persons, the Department hopes to dismantle trafficking in persons rings and dramatically reduce the number of trafficking victims.

The U.S. Government has already taken a number of actions to implement section 107 of the TVPA. A key initial response under the TVPA was to improve the ability of law enforcement agencies to identify victims of severe forms of trafficking in persons and to provide appropriate information and assistance to them pursuant to section 107(c) of the TVPA. The Attorney General and the Secretary of State already have issued regulations implementing the requirements for assistance to victims of severe forms of trafficking in persons under section 107(c). See 66 FR 38514 (July 24, 2001) (codified at 28 CFR part 1100).

Section 107(c) permits the Service, in cooperation with other law enforcement agencies, to arrange for the ''continued presence'' of aliens who have been the victims of severe forms of trafficking in persons and are potential witnesses to that trafficking, so that they will be available to assist with the investigation and prosecution of the traffickers. As provided in 28 CFR 1100.35, the Service will arrange for ''continued presence'' of such victims, at the request of appropriate law enforcement agencies, during the time that their presence in the United States is needed for law enforcement purposes. In most of those cases, the Service (whether through

parole or other means) will be able to grant the victims temporary work authorization during the time they remain in the United States to assist with these law enforcement efforts.

Section 107(b) of the TVPA also provides that aliens who are victims of severe forms of trafficking in persons who have been granted continued presence, or who have filed a *bona fide* application for T nonimmigrant status, also are eligible to receive certain kinds of public assistance to the same extent as refugees.

Finally, in another part of the same Act that enacted the provisions of the TVPA for victims of trafficking in persons, Congress also provided for a new U nonimmigrant status for victims of certain kinds of crimes, including crimes involving trafficking in persons. VAWA section 1513. The Department will be publishing regulations to implement the U nonimmigrant status in a separate rulemaking action.

T Nonimmigrant Status

This rule implements one aspect of these new protections for victims of severe forms of trafficking in persons, the T nonimmigrant status. Congress established this new classification, in section 107(e) of the TVPA, to create a safe haven for certain eligible victims of severe forms of trafficking in persons who are assisting law enforcement authorities in investigating and prosecuting the perpetrators of these crimes. Children who have not yet attained the age of 15 at the time of application are exempt from the requirement to comply with law enforcement requests for assistance in order to establish eligibility.

T nonimmigrant status is applicable to victims of severe forms of trafficking in persons who are physically present in the United States, American Samoa, or the Commonwealth of the Northern Mariana Islands, or at a port-of-entry thereto, on account of such trafficking in persons. Applicants for this status must demonstrate that they would suffer extreme hardship involving unusual and severe harm if they were removed from the United States and that they have complied with any reasonable request for assistance in the investigation or prosecution of acts of trafficking in persons.

Principal aliens eligible for T nonimmigrant status may be granted T–1 status, which the TVPA limits to no more than 5,000 each fiscal year. In some circumstances, immediate family members of victims of severe forms of trafficking in persons also may receive a T nonimmigrant visa to accompany or to join the victim. When the Service approves a T nonimmigrant status application, it will provide a list of nongovernmental organizations to which the alien can refer regarding the alien's options while in the United States and resources available to the alien.

T nonimmigrant status allows eligible aliens to remain in the United States and grants specific nonimmigrant benefits. The T status is separate and distinct from the provision for ''continued presence'' pursuant to 28 CFR 1100.35, which is only temporary and requires that the alien depart the United States once his or her presence for purposes of the criminal investigation or prosecution is no longer required, unless the alien has some other immigration status. Those acquiring T–1 nonimmigrant status will be able to remain in the United States for a period of three years, whether or not they were granted ''continued presence.''

Unlike other provisions of section 107 of the TVPA, T–1 nonimmigrant status is limited to victims of severe forms of trafficking in persons who are physically present on account of the trafficking and can establish that they would suffer ''extreme hardship involving unusual and severe harm'' if they were removed from the United States. In view of the annual limitation imposed by Congress for T–1 status, and the standard of extreme hardship involving unusual and severe harm, the Service acknowledges that the T–1 status will not be an appropriate response with respect to many cases involving aliens who are victims of severe forms of trafficking in persons.

To best meet these goals, the Service has determined that applicants may apply individually for T–1 nonimmigrant status without requiring third party sponsorship from a law enforcement agency, as is the case for the existing S nonimmigrant status for alien witnesses and informants. See 8 CFR 214.2(t). Recognizing the importance of providing assistance to law enforcement investigations and prosecutions, however, this interim rule provides a standard form for law enforcement agencies to use to provide sufficient background information to document that the alien is a victim of a severe form of trafficking in persons and has cooperated with reasonable requests for assistance to law enforcement. Although a law enforcement endorsement will not be required, and an alien will be able to submit secondary evidence to establish these statutory requirements, the submission of this endorsement form will serve as primary evidence to satisfy these two elements and is strongly encouraged.

Aliens who have been granted T–1 status also will be able to seek derivative T status for their immediate family members who are accompanying or following to join them, if they can demonstrate that the removal of those family members from the United States (or the failure to admit the family members to the United States if they are currently abroad) would result in extreme hardship. Eligible immediate family members of the T–1 principal may receive derivative T–2 (spouse) or T–3 (child) status, and, in the case of a T–1 principal alien under the age of 21, T–4 (parent) status. The statutory numerical limitations do not apply to immediate family members classified as T nonimmigrant aliens. The Service notes that such immediate family members also may qualify for protection in appropriate cases under the regulations adopted to implement section 107(c) of the TVPA. See 28 CFR 1100.31.

Eligible victims who are granted T–1 nonimmigrant status will be issued employment authorization to assist them in finding safe, legal employment while they attempt to retake control of their lives. Aliens with derivative T–2, T–3, or T–4 status also may apply for employment authorization.

The TVPA also provides for the adjustment of status, at the Attorney General's discretion, from T nonimmigrant status to lawful permanent resident status for T nonimmigrants who: (1) Are admissible; (2) have been physically present in the United States for a continuous period of at least 3 years since the date of admission with T–1 nonimmigrant status; (3) throughout such period have been persons of good moral character; and (4) establish either (i) that during such period they have complied with any reasonable request for assistance in the investigation or prosecution of acts of trafficking in persons, or (ii) that they would suffer extreme hardship involving unusual and severe harm upon removal from the United States. The provisions concerning adjustment of status will be the subject of a separate rulemaking.

The Interim Rule

To qualify for T–1 nonimmigrant status, a person must demonstrate: (1) That he or she is a victim of a severe form of trafficking in persons; (2) that he or she is physically present in the United States, American Samoa, or the Commonwealth of the Northern Mariana Islands, or at a port of entry thereto, on account of such trafficking in persons;

(3) that, if 15 years of age or older, he or she has complied with any reasonable request for assistance in the investigation or prosecution of acts of trafficking in persons; and (4) that he or she would suffer extreme hardship involving unusual and severe harm if removed from the United States. The alien also must be admissible to the United States or obtain a waiver of inadmissibility from the Service. This rule addresses what the alien must show to meet each element necessary to qualify for the T nonimmigrant classification. The Service has created a new Form I–914, *Application for the T Nonimmigrant Status,* for this purpose. Form I–914 is composed of three sections: *Application for the T Nonimmigrant Status* (required); Supplement A, *Application for Immediate Family Member of T–1 Recipient;* and Supplement B, *Declaration of a Law Enforcement Officer for Victim of Trafficking in Persons.*

How Is a Victim of a Severe Form of Trafficking in Persons Defined?

Section 103 of the TVPA defines the term ''victim of a severe form of trafficking in persons.'' To be a ''victim of a severe form of trafficking in persons,'' an individual must

- Have been recruited, harbored, transported, provided, or obtained for labor or services, or the purposes of a commercial sex act; and
- There must have been some force, fraud, or coercion involved to make the victim engage in the labor or services or the commercial sex act (except that there need not be any force, fraud, or coercion in cases of commercial sex acts where the victim is under 18); and
- For situations involving labor or services, the use of force, fraud, or coercion must be for the purpose of subjecting the victim to involuntary servitude, peonage, debt bondage, or slavery.

This legislation provided the first definition under Federal law of a victim of a severe form of trafficking in persons. It builds upon the Constitutional prohibition on slavery, the existing criminal law provisions on slavery and peonage (Chapter 77 of title 18, U.S. Code, sections 1581 *et seq.*), on the case law interpreting the Constitution and these statutes (specifically *United States* v. *Kozminski,* 487 U.S. 931, 952 (1988)), and on the new criminal law prohibitions contained in the TVPA.

In order to make potential applicants for T–1 nonimmigrant status aware of the types of violations that must exist in order to meet the statutory definition of severe forms of trafficking in persons, the Service makes reference to the text of the 12 Federal criminal civil rights statutes contained within Chapter 77 of title 18 of the U.S. Code, beginning with section 1581. This set of statutes contains both preexisting and newly created trafficking in persons laws, many of which appear to constitute the crimes that Congress intended to cover in its statutory definition of severe forms of trafficking in persons. Accordingly, the definitions contained in section 214.11 reference the scope of those criminal provisions as an appropriate guide in applying the definitions of ''severe forms of trafficking in persons'' and its related terms for purposes of the T nonimmigrant status.

The statutory definition of involuntary servitude reflects the new Federal crime of ''forced labor'' contained in section 103(5) of the TVPA, and expands the definition of involuntary servitude contained in *Kozminski.* In crafting the definition in the TVPA, Congress intended to broaden the types of criminal conduct that could be labeled ''involuntary servitude.''

The legislative history of the new ''forced labor'' crime (18 U.S.C. 1589) provides helpful guidance on what types of conduct Congress intended to cover in its statutory definitions of severe trafficking in persons and, in particular, involuntary servitude:

> ''Section 1589 is intended to address the increasingly subtle methods of traffickers who place their victims in modern-day slavery, such as where traffickers threaten harm to third persons, restrain their victims without physical violence or injury, or threaten dire consequences by means other than overt violence * * * Because provisions within section 1589 only require a showing of a threat of ''serious harm,'' or of a scheme, plan, or pattern intended to cause a person to believe that such harm would occur, federal prosecutors will not have to demonstrate physical harm or threats of force against victims. The term ''serious harm'' * * * refers to a broad array of harms, including both physical and nonphysical, and section 1589's terms and provisions are intended to be construed with respect to the individual circumstances of victims that are relevant in determining whether a particular type or certain degree of harm or coercion is sufficient to maintain or obtain a victim's labor or services, including the age and background of the victims.'' 146 Cong. Rec. H8881 (daily ed. Oct. 5, 2000).

The only term within the statutory definition in section 103 of the TVPA that is not covered by Chapter 77 of title 18, U.S. Code, is the term ''debt bondage.'' According to the TVPA, ''the term ''debt bondage'' means the status or condition of a debtor arising from a pledge by the debtor of his or her personal services or of those of a person under his or her control as a security for debt, if the value of those services as reasonably assessed is not applied toward the liquidation of the debt or the length and nature of those services are not respectively limited and defined.'' TVPA, section 103(4).

The Service also notes that the definitions in section 103 of the TVPA are applicable not only for purposes of the T nonimmigrant status, but also for many other purposes as well under the TVPA. For example, the same definitions of ''severe forms of trafficking in persons'' and its related terms are used for purposes of:

- The provisions of section 107(c) of the TVPA and in the implementing regulations on Protection and Assistance for Victims of Trafficking adopted by the Attorney General and the Secretary of State at 66 FR 38514 (July 24, 2001) (to be codified at 28 CFR part 1100);
- The provisions for eligibility for benefits and services under section 107(b) of the TVPA;
- The annual country reports on human rights practices prepared by the Department of State under the Foreign Assistance Act of 1961, as amended by section 104 of the TVPA; and
- The minimum standards for the elimination of severe forms of trafficking in persons and the provisions to promote compliance with those minimum standards, as provided in sections 108 through 111 of the TVPA.

In providing for the new T nonimmigrant status, Congress directed the Attorney General to apply the definition of a ''victim of a severe form of trafficking in persons'' as it is defined in section 103 of the TVPA. Section 103 of the TVPA provides a common definition of the key statutory terms that are used in several different contexts in Title I of the TVPA. In view of the common usage of these definitions in section 103 for many purposes under the TVPA, the Service will interpret and apply those terms for purposes of the T nonimmigrant status with due regard for the definitions and application of these terms in 28 CFR part 1100 and the provisions of chapter 77 of title 18, United States Code.

In determining whether an applicant is a victim of a severe form of trafficking in persons, the Service will consider all credible and relevant evidence. Except in instances of sex trafficking involving minors, severe forms of trafficking in persons must involve both a particular means (force, fraud, or coercion) and a particular end (sex trafficking,

involuntary servitude, peonage, debt bondage, or slavery). It is the applicant's burden to demonstrate both elements of a severe form of trafficking in persons. For example, an adult involved in commercial sexual activity that is not induced by force, fraud, or coercion will not be considered a victim of a severe form of trafficking in persons.

When Is an Alien Physically Present in the United States on Account of Such Trafficking?

A victim of a severe form of trafficking in persons must be ''physically present in the United States, American Samoa, or the Commonwealth of the Northern Mariana Islands, or at a port of entry thereto, on account of such trafficking.'' TVPA, section 107(e)(1)(T)(i)(II). Some traffickers arrange for entry of their victims into these jurisdictions as part of the trafficking scheme, while other traffickers prey upon aliens who are already in the United States. These aliens may have entered lawfully for a certain purpose, for instance in a student status under section 101(a)(15)(F) of the Immigration and Nationality Act (INA), or they may have entered without being admitted or paroled and are unlawfully present. The Service is interpreting the statute in light of Congressional intent to reach those aliens who are physically present under each of these circumstances if they are or were victims of severe forms of trafficking in persons occurring within those jurisdictions. The Service will take into account the circumstances relating to the alien's arrival and current presence in these jurisdictions.

As a result of this broad range of aliens who may be victims of severe forms of trafficking in persons, the Service interprets the physical presence requirement to reach those aliens who: (1) Are present because they are being held in some sort of severe form of trafficking in persons situation; (2) were recently liberated from a severe form of trafficking in persons; or (3) were subject to severe forms of trafficking in persons at some point in the past and remain present in the United States for reasons directly related to the original trafficking in persons.

If such aliens have escaped their traffickers before law enforcement became involved in the matter, they must show that they did not have a clear chance to leave the United States in the interim. The Service will consider whether an applicant had a clear chance to leave in light of the individual applicant's circumstances. Information relevant to this determination may include, but is not limited to, circumstances attributable to the trafficking in persons situation. This determination may reach both those who entered the United States lawfully and those who entered without being admitted or paroled.

The Service will consider all evidence available to determine physical presence, including requiring the alien to explain in a narrative submitted as part of Form I–914, *Application for the T Nonimmigrant Status.* This information will help Service adjudicators determine whether the alien had a clear chance to leave the United States after escaping from the trafficker, in order to determine whether an alien is present on account of trafficking.

Aliens who have traveled out of the United States and then returned will be presumed not to be here on account of trafficking in persons and will have to show that their presence here is the result of continued victimization at the hands of the traffickers or a new incident of a severe form of trafficking in persons.

It is important to note that aliens who are present in the United States without having been admitted or paroled are inadmissible, and accordingly they will have to obtain a waiver of inadmissibility in order to be eligible for T nonimmigrant status.

What Is the Difference Between Alien Smuggling and Severe Forms of Trafficking in Persons?

Federal law makes a distinction between alien smuggling—in which the smuggler arranges for an alien to enter the country illegally for any reason, including where the alien has voluntarily contracted to be smuggled—and severe forms of trafficking in persons. Unlike alien smuggling, severe forms of trafficking in persons must involve both a particular means such as the use of force, fraud, or coercion, and a particular end such as involuntary servitude or a commercial sex act (with regard to a commercial sex act, however, the use of force, fraud, or coercion is not necessary if the person induced to perform a commercial sex act is under the age of 18). Pursuant to the TVPA, victims of a severe form of trafficking in persons are persons who are recruited, harbored, transported, provided, or obtained for: (1) Labor or services, through the use of force, fraud, or coercion for the purpose of subjection to involuntary servitude, peonage, debt bondage, or slavery; or (2) the purpose of a commercial sex act in which such act is induced by force, fraud, or coercion, or in which the person induced to perform such act has not attained 18 years of age.

In most cases, aliens who are voluntarily smuggled into the United States will not be considered victims of a severe form of trafficking in persons. However, individuals who are voluntarily smuggled into the United States in order to be used for labor or services may become victims of a severe form of trafficking in persons if, for example, after arrival the smuggler uses threats of serious harm or physical restraint to force the individual into involuntary servitude, peonage, debt bondage, or slavery. Federal law prohibits forced labor regardless of the victim's initial consent to work. This distinction between alien smuggling and severe forms of trafficking in persons is consistent with the separate treatment of trafficking in persons and alien smuggling internationally.

Aliens who can establish that they are or have been a victim of a severe form of trafficking in persons, regardless of the circumstances of their arrival in the United States, may be eligible to receive various forms of assistance under sections 107(b) or (c) of the TVPA. In addition, a Federal law enforcement agency may request the Service to arrange for the alien's ''continued presence'' as provided in 28 CFR 1100.35 for purposes of the investigation and prosecution of trafficking in persons crimes.

How Is Continued Presence, Issued Under Section 107(c) of the TVPA, Related to Obtaining T–1 Status?

One of the elements an applicant for T–1 nonimmigrant status must prove is that he or she is a victim of a severe form of trafficking in persons. Documentation from the Service granting the applicant ''continued presence'' in accordance with section 107(c) of the TVPA and 28 CFR 1100.35 shall be considered as establishing victim status. Continued presence documentation shall not be valid for purposes of establishing victim status, however, if the continued presence has been revoked based on a determination that the applicant is not a victim of a severe form of trafficking in persons.

What Is a Reasonable Request for Assistance From Law Enforcement in the Investigation or Prosecution of Acts of Trafficking?

To be eligible for T nonimmigrant status, a victim of a severe form of trafficking in persons must comply with any reasonable request for assistance in the investigation or prosecution of acts of trafficking in persons (unless the victim is under the age of 15). When the

applicant submits a Law Enforcement Agency (LEA) endorsement as part of his or her application package, the LEA who requested cooperation will make the initial determination as to the cooperation of the applicant. The Service will only challenge this assertion when there is evidence that the LEA's conclusion is incorrect.

The Service interprets a ''reasonable request for assistance'' to be one made to a victim of a severe form of trafficking in persons to assist law enforcement authorities in the investigation or prosecution of acts of trafficking in persons. The Service's evaluation of the reasonableness of a request will be based on the totality of the circumstances, taking into account general law enforcement, prosecutorial, and judicial practices, the nature of the victimization, and the specific circumstances of the victim, including fear, severe traumatization (both mental and physical), and the age and maturity of young victims. Absent exceptional circumstances, it is reasonable for a law enforcement agency to ask of a victim of a severe form of trafficking in persons similar things it asks of other comparably-situated crime victims. The Service welcomes comments on how it should evaluate the reasonableness of a request for assistance from law enforcement, particularly with respect to requests made to victims who are under the age of 18.

In view of the statutory requirement for a victim of a severe form of trafficking in persons to comply with reasonable requests made by an LEA investigating or prosecuting severe forms of trafficking in persons, the victim must have had contact with a law enforcement agency regarding the incident, either by reporting the crime or by responding to inquiries from an LEA.

On the form filled out by the LEA investigator or prosecutor, Supplement B, *Declaration of Law Enforcement Officer for Victim of Trafficking in Persons*, of Form I–914, *Application for T Nonimmigrant Status*, the Service will ask for information about the victim's cooperation with that LEA. The Service also will ask the alien to provide information about his or her cooperation on Form I–914. In determining whether an alien meets this element of T–1 nonimmigrant status eligibility, the Service will look at the totality of the circumstances surrounding the alien's involvement with the law enforcement or prosecuting agency.

The alien may provide any credible evidence to meet this prong of eligibility or any other prong of eligibility. A non-exhaustive list of suggested forms of secondary evidence includes trial transcripts, court documents, police reports, news articles, and copies of reimbursement forms for travel to and from court. Under 8 CFR 103.2, affidavits are not considered primary or secondary evidence. They are another form of evidence, nonetheless. Applicants may provide their own affidavits and those from other witnesses.

If the Service has reason to believe that there is a question about the reasonableness of a request for assistance by an LEA or the applicant's compliance, and the resolution of this question is necessary for the proper adjudication of the application, the Service will contact the LEA. The Service will take all practical steps to reach an acceptable resolution with the LEA. The determination of what is a reasonable request shall be within the sole discretion of the Service.

From Whom May the Request for Law Enforcement Assistance Come?

This rule provides that any appropriate LEA with jurisdiction in the investigation or prosecution of acts of trafficking in persons may make a request for law enforcement assistance. An LEA is a Federal law enforcement or prosecuting agency, including, but not limited to, the Federal Bureau of Investigation (FBI), the Service, the United States Attorneys' Offices, the Department of Justice's Civil Rights and Criminal Divisions, the United States Marshals Service, and the Department of State's Diplomatic Security Service. While States and localities may investigate or prosecute crimes of ''trafficking in persons,'' for purposes of this rule the only agencies authorized to investigate or prosecute crimes that meet the definition under the TVPA of ''severe forms of trafficking in persons'' are those that investigate violations of the Federal offenses detailed in the TVPA. If state or local investigative or prosecuting agencies believe they have encountered a victim of a severe form of trafficking in persons, they should contact an LEA to report the crime. In this way, aliens who have only received requests to assist in the criminal investigations or prosecutions of state or local crimes also may have the opportunity to assist Federal law enforcement or prosecuting agencies and therefore meet the requirements for eligibility for T–1 nonimmigrant status under this section and the Act.

What Is the Law Enforcement Agency Endorsement?

The LEA endorsement is Supplement B, *Declaration of a Law Enforcement Officer for Victim of Trafficking in Persons*, of Form I–914, *Application for T Nonimmigrant Status*. It is issued by the authorities conducting an investigation or prosecution when they believe an individual is or has been a victim of a severe form of trafficking in persons and the victim has cooperated with any reasonable law enforcement requests. The Service has interpreted the statutory language to mean that only Federal law enforcement agencies investigating or prosecuting acts of trafficking in persons will be allowed to fill out the LEA endorsement. The Service has chosen this interpretation because severe forms of trafficking in persons are Federal crimes under the TVPA. If a state law enforcement agency believes it has encountered a victim of a severe form of trafficking in persons who would be eligible for T–1 nonimmigrant status, the state law enforcement agency or the alien should contact the local office of an LEA or the Civil Rights Division's Criminal Section. Potential victims who have not yet reported crimes to an LEA ought to contact the nearest local FBI, Service, or U.S. Attorney's office to report the trafficking in persons crime. Alternatively, the victim may contact the Department of Justice, Civil Rights Division, Trafficking in Persons and Worker Exploitation Task Force complaint line at 1–888–428–7581 to report crimes and to obtain information about LEA endorsements. It is important to recognize that an LEA, if it so desires, may only fill out an endorsement when, after a full assessment, it determines that the individual is a victim of a severe form of trafficking in persons and has complied with any reasonable request the LEA has made.

An LEA endorsement is not a mandatory part of a T–1 nonimmigrant status application. All T–1 applicants, however, are strongly encouraged to provide such an endorsement if possible. The LEA endorsement serves as primary evidence that the alien is a victim of a severe form of trafficking in persons, and has not unreasonably refused to assist in the investigation or prosecution of trafficking in persons. If the applicant chooses not to include an LEA endorsement, the Service will make an independent assessment of any credible evidence presented, in accordance with this rule, to determine if the applicant meets the cooperation with law enforcement requirement.

When Will the Service Provide Information From the Form I–914, Application for the T Nonimmigrant Status, to Other Agencies?

A victim's confidentiality and his or her safety, to the extent the law allows, will be considered when releasing information to Federal investigative agencies and/or defendants. In accordance with 42 U.S.C. 10606, Department of Justice employees will use their best efforts to see that victims of Federal crimes are accorded the rights due such victims, including the right to be treated with fairness and with respect for their dignity and privacy, and the right to be reasonably protected from accused offenders.

However, the Service may provide the information about any Federal crimes detailed to Federal investigative agencies, such as the FBI, U.S. Attorney's office, or the Department's Civil Rights or Criminal Divisions, or to the Service's Investigations unit. These contacts may be for the purpose of assessing whether an alien has complied with any reasonable request for assistance, or to promote enforcement of the Federal laws against trafficking in persons.

In addition, under established legal standards, the Department of Justice has an obligation to provide statements by witnesses and certain other documents to defendants in pending criminal proceedings. These obligations stem from constitutional, statutory, and other legal requirements that pertain to the government's duty to disclose information, including exculpatory evidence or impeachment material, to the defendant in order to prepare his or her defense. Accordingly, in any case where the Department is prosecuting a person for trafficking in persons offenses involving that victim, the Service will make appropriate arrangements with the Department of Justice component responsible for prosecution to ensure that information in the victim's application for T nonimmigrant status and other documents that fall within the scope of the Department's legal obligations will be made available on a timely basis to the Federal prosecutors.

What Happens if an Applicant Is Inadmissible Under One of the Grounds in Section 212(a) of the Immigration and Nationality Act?

A principal or derivative applicant who is or becomes inadmissible under section 212(a) of the INA will not be eligible for T nonimmigrant status unless the ground of inadmissibility is waived by the Service. If the ground of inadmissibility is one that can be waived, the alien should apply for a waiver of the grounds of inadmissibility from the Service on Form I–192, *Application for Advance Permission to Enter as Nonimmigrant (Pursuant to Section 212(d)(3) of the Immigration and Nationality Act*). Section 212(d)(3)(B) provides general authority for the Service to waive many grounds of inadmissibility for nonimmigrants. These waivers are not automatic, but may be granted in the exercise of its discretion. Form I–192 should be filed at the time of filing Form I–914.

In the TVPA, Congress recognized that victims of a severe form of trafficking in persons might need this specific relief from inadmissibility. Section 107(e)(3) of the TVPA creates additional authority for the waiver of inadmissibility, at the discretion of the Attorney General, in the case of victims of a severe form of trafficking in persons if the Attorney General considers it to be in the national interest to do so. Under new section 212(d)(13) of the INA, such victims may receive a waiver on health-related grounds (section 212(a)(1)) or on public charge grounds (section 212(a)(4)). Section 212(d)(13) of the INA also authorizes the Attorney General to waive the criminal grounds of inadmissibility in section 212(a)(2) of the INA and certain other grounds if the activities rendering the alien inadmissible were caused by or were incident to the alien's victimization.

The reference to waiver of the public charge ground should be understood in light of another section of the TVPA—section 107(b)(1)(A) and (E)—which provides that victims of severe forms of trafficking in persons who are over 18 years of age may be certified by the Department of Health and Human Services (HHS) to receive certain benefits and services ''to the same extent as an alien who is admitted to the United States as a refugee.'' Victims of a severe form of trafficking in persons under age 18 also are eligible for services to the same extent as refugees, but they do not have to be certified by HHS. Under this provision, victims may receive certain benefits and services as if they were refugees, which might include cash assistance. Refugees are provided with special humanitarian benefits because of their vulnerable circumstances, and are exempt from virtually every aspect of the public charge determination. For the purposes of receipt of public benefits, Congress has recognized that victims of severe forms of trafficking are in much the same position as refugees, and therefore has provided specific authority for the Service to exempt them from the ground of inadmissibility for aliens who are likely to become a public charge.

How Does a Victim of a Severe Form of Trafficking in Persons Apply for T–1 Nonimmigrant Status?

A victim of a severe form of trafficking in persons may apply directly to the Service for T–1 nonimmigrant status. The application requires submission of a Form I–914, a $200 filing fee (plus $50 per immediate family member) or an application for a fee waiver, a fingerprinting fee, three current identical color photographs, and evidence establishing each eligibility requirement. All necessary materials should be compiled into one application package and submitted to the Director, Vermont Service Center, 75 Lower Welden Street, St. Albans, Vermont 05479–0001.

All applicants for T nonimmigrant status must be fingerprinted for the purpose of conducting a criminal background check as part of the application process. The Service recognizes the importance of making timely determinations of *bona fide* applications in order for victims of severe forms of trafficking to receive critical health and other social services as soon as possible. After submitting an application with fee to the Service, the applicant will be notified of the proper time and location to appear for fingerprinting. In 1997, Congress created a new program that required the Service to have direct oversight of the fingerprint process and enabled the Service to add new technology for exchanging data with the FBI. As a result, the Service created the Application Support Center (ASC) program, which is currently composed of 133 offices located across the country. In addition, state-of-the-art technology and customized software have been employed at these ASCs, permitting live-scan capture of fingerprints and automated transmission of fingerprints to the FBI's Integrated Automated Fingerprint Identification System (IAFIS) electronically. As a result of these process and systems enhancements, the Service has been able to reduce the rate at which the FBI rejected these fingerprint cards from 40 percent to 3 percent, and reduced the overall FBI response time from approximately nine months to, in most cases, less than one day. The Service will continue to review fingerprint processing operational performance and build upon ongoing enhancements in applicant scheduling, live-scan biometrics capture, and automated data exchange to ensure the overall efficiency and timeliness of fingerprint

processing. As part of the forthcoming final rulemaking, the Service will consider whether any systemic issues have arisen regarding the timeliness of background checks related to the administration of this program, and consider whether any improvements need to be made by the Service to ensure timely determinations of whether an applicant has submitted a *bona fide* application.

What Are the Stages Involved With the Application Process for T Nonimmigrant Status?

There are several stages involved in the T nonimmigrant status application process: (1) The submission of an application for T–1 nonimmigrant status (which may be accompanied by applications for derivative T nonimmigrant status for immediate family members); (2) the Service's determination of whether an application for T nonimmigrant status is *bona fide*; and (3) the adjudication of the application for T nonimmigrant status. The Service will approve an application for T–1 nonimmigrant status when room is available under the cap for each fiscal year, or place the alien on the waiting list (which will be carried over to subsequent years) for the grant of a T–1 nonimmigrant status application if the cap has been reached. The cap is not affected by applications for derivative T nonimmigrant status.

Submission of an application for T–1 nonimmigrant status. In the first stage of the process, the alien submits an application for T–1 nonimmigrant status. At this stage, the victim of a severe form of trafficking in persons provides evidence sufficient to demonstrate each required element necessary for the Service to issue T–1 nonimmigrant status.

A complete application includes Form I–914, *Application for the T Nonimmigrant Status*; three identical color photographs; applicable fees or applications for fee waivers; and all evidence to fully support his or her claims to the four eligibility elements. An application also may include Supplement A, *Supplemental Application of Immediate Family Members for T–1 Recipient*, and Supplement B, *Declaration of a Law Enforcement Officer for Victim of Trafficking in Persons* of Form I–914, *Application for T Nonimmigrant Status*, and Form I–192, *Application for Advance Permission to Enter as Nonimmigrant*, for a waiver of a ground of inadmissibility, if necessary.

An Employment Authorization Document will be generated from the I–914 information. The applicant does not need to file Form I–765, *Application for Employment Authorization*, with the application package.

Determination of a bona fide application for T nonimmigrant status. The Service will review the submitted information to ensure that the application is complete and ready for adjudication, which includes that the fingerprinting and criminal background checks are completed and that the submitted information presents *prima facie* evidence for each eligibility requirement. This determination of whether there is *prima facie* evidence will be made for T–1 applications, according to the eligibility standards for that status. If the application is sufficient, the application will be determined to be a *bona fide* application for T–1 nonimmigrant status. However, if the alien is inadmissible, the Service will not consider the application to be *bona fide* unless the ground of inadmissibility is one under the circumstances described in section 212(d)(13) of the INA, as added by section 107(e) of the TVPA, or unless the Service already has granted a waiver of inadmissibility with respect to any other ground. All waivers are discretionary and require a request for a waiver. Under section 212(d)(13), however, an application can be *bona fide* before the waiver is granted. This is not the case under other grounds of inadmissibility.

The Service will not consider an application that is incomplete to be *bona fide* until the applicant submits the necessary additional evidence to establish *prima facie* eligibility for each required element of the T–1 nonimmigrant status. The Service will notify the applicant regarding the additional evidence that needs to be submitted in those circumstances, as provided in 8 CFR 103.2(b)(8).

Once an application is determined to be a *bona fide* application for T nonimmigrant status, the Service will provide written confirmation to the applicant. The Service will use various means to prevent the removal of individuals who have filed *bona fide* applications, such as deferred action, parole, and stay of removal, until the Service issues a final decision on the application. (Some victims of a severe form of trafficking in persons, however, already may have been granted ''continued presence'' as provided in section 107(c) of the TVPA and the regulation implementing it. See 66 FR 38514 (July 24, 2001) (codified at 28 CFR 1100.35).) Individuals granted deferred action, parole, or stay of removal may be granted employment authorization by filing Form I–765, *Application for Employment Authorization*, in accordance with Service policies and procedures.

Once an application for T–1 nonimmigrant status is determined to be *bona fide* by the Service, an applicant age 18 or older may apply to HHS to be certified to receive certain benefits and services to the same extent as refugees, as provided in section 107(b) of the TVPA. In order for the victim of a severe form of trafficking in persons to be eligible, HHS must certify him or her to receive such benefits and services, unless the victim is under the age of 18. The Service notes that victims under age 18 do not need to be certified, nor do they need to submit a *bona fide* application for T nonimmigrant status, in order to receive such benefits and services. To be considered a victim and therefore eligible for these benefits and services, those under 18 must be determined to have been subjected to a severe form of trafficking in persons. The Service also notes that individuals who have received ''continued presence'' under section 107(c) of the TVPA may apply to HHS to be certified.

Adjudication of applications for T nonimmigrant status. The Service has centralized the adjudication process at its Vermont Service Center. This centralization will allow adjudicators to develop expertise in handling these cases and provide for uniformity in the adjudication of these applications. If the Service finds that the alien has satisfied the requirements for T nonimmigrant status, it will either grant T nonimmigrant status or (in the case of T–1 applicants who are subject to the annual cap) place the alien on a waiting list, as discussed below.

In any case in which the Service denies an application for T nonimmigrant status, the applicant can appeal to the Administrative Appeals Office (AAO) under procedures outlined in 8 CFR 103.3.

Approval of T–1 nonimmigrant status or placement on the waiting list for the grant of T–1 nonimmigrant status. If the Service determines that there are sufficient grounds to grant T–1 nonimmigrant status, the Service will send a notice of approval to the applicant only if a T–1 nonimmigrant status number is available. When the Service grants an application for T–1 status, it will simultaneously grant employment authorization (if not already obtained).

In the event a number is not available, the Service will send the applicant a notice of placement on the waiting list.

What Will Happen if There Are More Eligible T–1 Applicants Than the Number Available for the Year?

According to the TVPA, there is a 5,000-person limit to the number of individuals who can be granted T–1 status per fiscal year (from October 1 through September 30). Once the numerical limit has been reached in a particular fiscal year, all pending and subsequently submitted applications will continue to be reviewed in the normal process to determine eligibility, but the Service will not grant T–1 nonimmigrant status prior to the beginning of the next fiscal year. Eligible applicants who are not granted T–1 status due solely to the numerical limit shall be placed on a waiting list to be maintained by the Service. In the event a number is not available, the Service will send the applicant a notice of placement on the waiting list. Applicants on the waiting list will be given priority the following fiscal year based on the date the application was properly filed. Each year, as new numbers for the T–1 nonimmigrant status become available, the Service will grant them to applicants on the waiting list.

Eligible applicants on the waiting list must be admissible at the time status is granted. Eligible applicants on the waiting list may be asked to resubmit fingerprints (and pay the appropriate fee) and photographs because of the passage of time between their submission and the date a nonimmigrant status becomes available. After the Service has granted T–1 status to applicants on the waiting list, the Service will continue to grant applications, up to the annual limit, to new applicants in the order in which each application was properly filed.

Will T–1 Applicants Be Removed From the United States While on the Waiting List?

The Service will use various means to prevent the removal of T–1 applicants on the waiting list, and their family members who are eligible for derivative T status, including its existing authority to grant deferred action, parole, and stay of removal. However, an applicant may be removed, and his or her application denied, for conduct that occurs while an alien is on the waiting list or for not disclosing relevant information at the time of filing. During this time, applicants for T status who are granted deferred action or stay of removal will not accrue unlawful presence under section 212(a)(6) or (9) of the INA. Applicants also will be able to renew their work authorization documents, as needed.

While on the waiting list, the T–1 applicant will remain in his or her current immigration status (deferred action, parole, stay of removal, or other immigration status) and will retain eligibility for employment authorization, subject to any conditions placed on that authorization, until new numbers for T–1 nonimmigrant status become available in a subsequent fiscal year.

How Will the Revocation of a T–1 Status Affect the Annual Cap?

The revocation of a T–1 status will have no effect on the annual cap. Once a T–1 status is granted, it will be deemed to have been used and cannot be used again. The Service considered re-using the T–1 status but determined it would be infeasible to track, especially if the T–1 status were granted several years ago and the individual were waiting for adjustment to lawful permanent resident status. The Service concluded that tracking when T–1 classifications are granted and then trying to backfill the numbers with additional grants or provide grants above the annual cap would put undue burden on the Service.

When Can a T–1 Nonimmigrant Apply for Derivative Status for Family Members?

An applicant for T–1 status may apply for derivative T nonimmigrant status, at the time of the original T–1 application, for his or her spouse (T–2) or child (T–3), or in the case of a child who is applying for T–1 status, the child's parents (T–4). An applicant for T–1 status or an alien who has been granted T–1 nonimmigrant status also may apply at a later date by filing a separate Form I–914 and attachments. Applications for derivative status must be accompanied by the required attachments, such as fingerprints, photographs, and fees.

How Will the Service Adjudicate Applications for Derivative Status of Family Members of a Victim of a Severe Form of Trafficking in Persons?

The annual limitation does not apply to immediate family members who are granted derivative T–2, T–3, or T–4 status. However, the Service will not grant an application for derivative T status until the principal alien has been granted T–1 status. Once the principal alien is granted T–1 nonimmigrant status, eligible family members who receive a derivative status can apply for employment authorization on Form I–765, and, if granted, receive work authorization.

What Is the Duration of the T Nonimmigrant Status?

T nonimmigrant status will be granted for 3 years. This period of stay is timed to coordinate with the separate statutory authority for adjustment of status. An alien in T nonimmigrant status is eligible to apply for adjustment of status to that of a legal permanent resident under the criteria listed in section 107(f) of the TVPA and forthcoming Service regulations. Should an alien with T nonimmigrant status leave the United States during the 3 years prior to applying for lawful permanent residence, he or she must file a Form I–131, *Application for Travel Document*, before departing the United States to obtain advanced parole in order to return to the United States. This requirement is true for T–1 principal aliens as well as family members in derivative T–2, T–3, or T–4 status.

The T nonimmigrant status is not renewable. If the alien properly files for adjustment of status to that of a person admitted for permanent residence within the 90-day period immediately preceding the third anniversary of the date of the approval of the alien's Form I–914, the alien shall continue to be in a T nonimmigrant status with all the rights, privileges, and responsibilities provided to a person possessing such status, including employment authorization, until such time as a final decision is rendered on the alien's adjustment of status. At the time an alien is approved for T nonimmigrant status, the Service shall notify the alien that his or her nonimmigrant status will expire in 3 years from the date of the approval of the alien's Form I–914, and that if the alien wishes to apply to adjust status, the alien must apply within the 90-day period immediately preceding the expiration of T nonimmigrant status.

What Is the Fee for an Application for T Nonimmigrant Status?

In the Departments of Commerce, Justice, and State, the Judiciary, and Related Agencies Appropriation Act, 1989, Pub. L. 100–459, Sec. 209, 102 Stat. 2186, 2203 (1988), Congress mandated that the Service prescribe and collect fees to recover the cost of providing certain immigration and naturalization benefits. Congress has not provided appropriated funds to pay for nonimmigrant classification programs.

The Service has determined that the fee for filing Form I–914, *Application for the T Nonimmigrant Status*, is $200. An applicant for T–1 status also will be

able to request derivative T nonimmigrant status for eligible family members for an additional fee of $50 for each person included in the same application, up to a maximum amount of $400.

Applications for immediate family members filed subsequent to the T–1 principal's application will be considered a new filing and will require the full fee of $200 for the first family member and $50 for each additional family member, up to a maximum amount of $400.

Are Fee Waivers Available?

The Service recognizes that many applicants for T nonimmigrant status may be unable to pay the full application fee. Applicants who are financially unable to pay the application fee may submit an application for a fee waiver, as outlined in 28 CFR 103.7(c). The granting of a fee waiver will be at the sole discretion of the Service. Further guidance on fee waivers can be found on the INS Web site currently at *http://www.ins.gov/graphics/formsfee/forms/index.htm#waiver.*

In addition to the filing fee for the Form I–914, applicants will have to submit the established fee for fingerprinting services for each person between the ages of 14 and 79 years inclusive with each application. This fee is currently $25 per person, and is not subject to a fee waiver. The Service has published a final rule to increase this amount to $50 per person, which takes effect February 19, 2002. See 66 FR 65811 (Dec. 21, 2001) (final rule adjusting fees for the Immigration Examinations Fee Account).

How Did the Service Arrive at the Fee Amount?

The Service arrived at the fee amount by comparing the process requirements of the new I–914 with existing adjudication procedures. The adjudication of the I–914 will be very similar to that of the I–360, *Petition for a Special Immigrant.* The application also will be used to generate an Employment Authorization Document (EAD), taking the place of a separate I–765, *Application for Employment Authorization.* The fee for the I–360 is $110, and the fee for the I–765 is $100. These fees are scheduled to be increased to $130 and $120 respectively on February 19, 2002. The sum of the two fees ($250) is reduced to $240 to reflect that only one form needs handling and tracking. Furthermore, there is no separate adjudication required for employment authorization for T principals, who are authorized to work incident to status. As a result, this fee has been further reduced to reflect saved adjudication expenses and to take into account that only the T principal's EAD is incident to status. Based on these calculations, the Service set the fee at $200. The addition of $50 for each additional person included on the form was based on a comparison of the I–914 process to the processing of Form I–687, *Application for Status as Temporary Resident,* which also requires an additional fee of $50 per additional person on the application. The Service conducts evaluations of the required fees every two years to ensure that they are fair and accurate. The fee charged for the Form I–914 will be reviewed periodically and adjusted, as appropriate.

May T–1 Applicants and Applicants for T Derivative Status Apply From a Foreign Country?

Applicants for T–1 status must be physically present in the United States at the time of application. However, the T–1 principal alien may apply to the Service for derivative T nonimmigrant status on behalf of immediate family members who are following to join the T–1 principal. The Service may approve applications for T–2, T–3, or T–4 status for eligible immediate family members if they are admissible to the United States and can meet the requirement to demonstrate extreme hardship. If the Service grants the application for derivative T nonimmigrant status for aliens who are currently abroad, the Service will notify the appropriate consular office and make arrangements for the issuance of the necessary visas for admission of those eligible family members.

Can Victims of a Severe Form of Trafficking in Persons That Occurred Prior to the Enactment of the TVPA Apply for a T Nonimmigrant Classification?

Yes. Victims of a severe form of trafficking in persons whose victimization occurred prior to enactment of the TVPA on October 28, 2000, may file a completed application. The Service recommends that victims file applications as soon as possible because delays could result in difficulty in establishing statutory eligibility requirements. Section 214.11(d)(4) of this rule provides that, if the victimization occurred prior to the enactment of the TVPA, the alien must file the application for T–1 status within one year of the effective date of this rule, except in exceptional circumstances or within one year after the victim reaches his or her 21st birthday, whichever comes later.

Does Applying for T Nonimmigrant Status Prevent the Applicant From Applying for Other Types of Immigration Benefits?

No. An alien may apply for any and all immigration benefits for which the alien may be eligible. However, an alien may not hold more than one nonimmigrant status at a time. Nothing in this regulation or in the TVPA limits a qualified applicant from seeking other immigration benefits while pursuing T status. In addition, aliens granted continued presence may be eligible to receive certain benefits and services authorized by section 107(b)(1) of the TVPA.

Can a Victim Who Is in Exclusion, Deportation, or Removal Proceedings Before an Immigration Judge or the Board of Immigration Appeals (Board) Apply for T Nonimmigrant Status?

Jurisdiction over all applications for T nonimmigrant status rests with the Service. However, a victim of a severe form of trafficking in persons who is currently in proceedings before an immigration judge or the Board may request Service counsel to consent to having the proceedings administratively closed (or that a motion to reopen or motion to reconsider be indefinitely continued) in order to allow the alien to pursue an application for T nonimmigrant status with the Service.

As noted above, in order to be eligible for T nonimmigrant status, the alien must demonstrate that he or she is admissible to the United States, or must obtain a waiver of inadmissibility from the Service. An application from an alien who is inadmissible on grounds other than under the circumstances specified in section 212(d)(13) of the INA will not be considered to be *bona fide* unless the Service has granted a waiver of those other grounds. Accordingly, the Service will consider consenting to the administrative closure of the immigration proceedings for the purpose of filing an application for T nonimmigrant status only if there is a good reason to believe that the alien will be able to satisfy the eligibility requirements for the T status, including admissibility. (The Service notes, however, that it may arrange for the continued presence in the United States of a victim of a severe form of trafficking in persons, pursuant to 28 CFR 1100.35, during such time as an LEA has requested the alien's presence in the United States for purposes of investigating and prosecuting acts of severe forms of trafficking in persons. The Service will not act to remove an alien from the United States until the

law enforcement need for the alien's continued presence has come to an end or the alien has violated the terms of the continued presence.)

The Service also acknowledges that, in some cases, an alien who is in immigration proceedings may be able to file a *bona fide* application for T nonimmigrant status. With respect to the medical and public charge grounds of inadmissibility, and certain other grounds of inadmissibility that were caused by or are incident to the alien's victimization, section 212(d)(13) of the INA provides additional authority for the waiver of these grounds in the case of applicants for T nonimmigrant status. For example, a victim of a severe form of trafficking in persons who had been forced into prostitution may well be able to make a *bona fide* application for T–1 status even though the alien has been placed into removal proceedings on grounds relating to those prostitution activities.

With the concurrence of Service counsel, if the alien appears eligible for T nonimmigrant status, the immigration judge or the Board, whichever has jurisdiction, may administratively close the proceeding or continue a motion to reopen or motion to reconsider indefinitely. In the event the Service subsequently denies the alien's application for T nonimmigrant status, the Service will recommence proceedings that have been administratively closed by filing a motion to re-calendar with the Immigration Court or a motion to reinstate with the Board.

Can a Victim of Trafficking in Persons With a Final Order of Exclusion, Deportation, or Removal Apply for T Nonimmigrant Status?

An alien who is the subject of a final order is not precluded from filing an application for T nonimmigrant status directly with the Service. In order to be eligible, an applicant for T nonimmigrant status must be admissible to the United States, and the Service notes that few aliens who are the subject of a final order of exclusion, deportation or removal will be able to satisfy that requirement. Thus, in general, the filing of an application for T nonimmigrant status will have no effect on the status of an alien who is subject to a final order.

In those cases where the only basis for the final order of removal is one of the grounds of inadmissibility described in section 212(d)(13) of the INA, the alien may be able to file a meritorious application for T nonimmigrant status. If the Service determines, as provided in this rule, that an alien's application for T status meets the requirements for a *bona fide* application, the Service will automatically stay execution of the final order of deportation, exclusion, or removal. Such a stay remains in effect until a final decision is made on the T application. If the T application is denied, the stay of the final order is deemed lifted as of the date of such a denial, without regard to whether the alien appeals the denial. However, the alien may apply for a discretionary stay of removal from the Service as provided in § 241.6(a).

If the application for T nonimmigrant status is granted, the final order shall be deemed canceled by operation of law as of the date of the approval.

What Happens to Victims of Severe Forms of Trafficking in Persons Arriving at a Port of Entry Who Are Subject to Expedited Removal?

Expedited removal applies to an ''arriving alien'', as defined in 8 CFR 1.1(q), when the alien is inadmissible pursuant to section 212(a)(6)(C) or 212(a)(7) of the INA. Current Service procedures protect and provide services to victims of a severe form of trafficking in persons when Federal law enforcement officials encounter such victims, including those aliens arriving at ports of entry. 28 CFR 1100.31. In addition, the Service is developing screening procedures to ensure that arriving aliens who are subject to the statutory provisions for expedited removal at ports of entry will, when applicable, be considered for T nonimmigrant status. An alien subject to expedited removal who expresses that he or she is a victim of a severe form of trafficking in persons will be interviewed by a Service officer immediately to determine whether there is reason to believe the individual is such a victim. Following such a determination, the victim will be referred to a District Office and will be interviewed by a Service officer responsible for investigating trafficking in persons within 7 days of arrival to determine whether the individual has a credible claim to victimization. The Service may inform an LEA that also investigates or prosecutes trafficking in persons about the individual's claim. If the alien has a credible claim to victimization, he or she will be given the opportunity to submit an application for T status pursuant to section 101(a)(15)(T) of the INA and any other benefit or protection for which they may be eligible. An arriving alien determined not to have a credible claim to being a victim of a severe form of trafficking in persons in the United States will be subject to expedited removal in accordance with Service policy.

Regulatory Procedures

Good Cause Exception

This interim rule is effective 30 days from the date of publication. The Service invites post-promulgation comments and will address any such comments in a final rule. The Department finds that good cause exists for adopting this rule without the prior notice and comment period ordinarily required by 5 U.S.C. 553(b), because, in light of the public safety implications of the rule, giving prior notice and opportunity for comment would be contrary to the public interest.

In passing the TVPA, Congress intended to create a broad range of tools to be used by the Federal government to combat the serious and immediate problem of trafficking in persons. The provisions of the TVPA address the effect of severe forms of trafficking in persons on victims, including many who may not have legal status and are reluctant to cooperate. In trafficking in persons situations, perpetrators often target individuals who are likely to be particularly vulnerable and unfamiliar with their surroundings. The TVPA strengthens the ability of government officials to investigate and prosecute trafficking in persons crimes by providing for temporary immigration benefits to victims of severe forms of trafficking in persons. This interim rule implements a legal nonimmigrant immigration status for eligible victims who have not refused any reasonable request to assist in the investigation or prosecution of a crime and can demonstrate that they would suffer extreme hardship involving severe and unusual harm if removed from the United States. Under section 107(b) of the TVPA, the filing of a *bona fide* application for T nonimmigrant status provides a basis to seek certification of the alien for purposes of eligibility for certain public benefits. In addition, this regulation provides certain victims with work authorization so that they may seek lawful employment. Without the prompt promulgation of this rule, victims of severe forms of trafficking in persons might continue to be victimized for fear of coming forward, thus hindering the ability of law enforcement to investigate and prosecute cases and preventing victims from obtaining critical assistance and benefits.

The issuance of these regulations as an interim rule effective 30 days after publication will allow victims to receive needed benefits and assistance as soon as possible. The 30-day delay in the

effective date will provide a brief interim period in which forms, informational brochures, and other guidance will be made available to Federal, state, tribal and local law enforcement officers and officials as well as non-profit victims rights and services groups. Because prior notice and comment with respect to this interim rule is contrary to the public interest, given the public safety implications of this rule, there is ''good cause'' under 5 U.S.C. 553 to make this rule effective March 4, 2002.

Regulatory Flexibility Act

In accordance with the Regulatory Flexibility Act (5 U.S.C. 605(b)), the Attorney General, by approving this regulation, certifies that this rule will not have a significant economic impact on a substantial number of small entities. The Attorney General has reviewed this regulation in light of its potential impact on small businesses. The businesses that would be most significantly affected by this rule would be those in which the illegal act of trafficking in persons contributed to, or composed the majority of, their workforce. The human rights and criminal issues associated with such trafficking in persons are seen as more significant than the impact on small businesses that are dependent on illegal or coerced labor in violation of United States law.

Unfunded Mandates Reform Act of 1995

This rule will not result in the expenditure by state, local and tribal governments, in the aggregate, or by the private sector, of $100 million or more in one year, and it will not significantly or uniquely affect small governments. Therefore, no actions were deemed necessary under the provisions of the Unfunded Mandates Reform Act of 1995.

Small Business Regulatory Enforcement Fairness Act of 1996

This rule is not a major rule as defined by section 251 of the Small Business Regulatory Enforcement Act of 1996. 5 U.S.C. 804. This rule will not result in an annual effect on the economy of $100 million or more; a major increase in costs or prices; or significant adverse effects on competition, employment, investment, productivity, innovation, or on the ability of United States-based companies to compete with foreign-based companies in domestic and export markets.

Executive Order 12866

This rule is considered by the Department of Justice to be a significant regulatory action under Executive Order 12866, section 3(f), Regulatory Planning and Review. Accordingly, this regulation has been submitted to the Office of Management and Budget for review.

Paperwork Reduction Act

The information collection requirements contained in this rule have been cleared by the Office of Management and Budget (OMB) under the provisions of the Paperwork Reduction Act. Clearance numbers for these collections are contained in 8 CFR 299.5, Display Control Numbers, and are noted herein. Form I–131, *Application for Travel Document*, OMB Control Number 1115–0062; Form I–192, *Application for Advance Permission to Enter as Nonimmigrant*, OMB Control Number 1115–0028; Form I–765, *Application for Employment Authorization*, OMB Control Number 1115–0163. In addition, one new Service form, Form I–914, *Application for T Nonimmigrant Status*, has received clearance from OMB and was assigned OMB Control Number 1115–0246.

Executive Order 13132

This rule will not have a substantial direct effect on the States, on the relationship between the National Government and the States, or on the distribution of power and responsibilities among the various levels of government. Therefore, in accordance with section 6 of Executive Order 13132, it is determined that this rule does not have sufficient Federalism implications to warrant the preparation of a Federalism summary impact statement.

Executive Order 12988 Civil Justice Reform

This final rule meets the applicable standards set forth in sections 3(a) and 3(b)(2) of Executive Order 12988.

List of Subjects

8 CFR Part 103

Administrative practice and procedure, Authority delegations (Government agencies), Freedom of information, Privacy, Reporting and recordkeeping requirements, Surety bonds.

8 CFR Part 212

Administrative practice and procedure, Aliens, Immigration, Passports and visas, Reporting and recordkeeping requirements.

8 CFR Part 214

Administrative practice and procedure, Aliens, Cultural exchange programs, Employment, Foreign officials, Health professions, Reporting and recordkeeping requirements, Students, Victims.

8 CFR Part 274a

Administrative practice and procedure, Aliens, Employment, Penalties, Reporting and recordkeeping requirements.

8 CFR Part 299

Immigration, Reporting and recordkeeping requirements.

Accordingly, chapter I of title 8 of the Code of Federal Regulations is amended as follows:

PART 103—POWERS AND DUTIES OF SERVICE OFFICERS; AVAILABILITY OF SERVICE RECORDS

1. The authority citation for part 103 continues to read as follows:

Authority: 5 U.S.C. 552, 552a; 8 U.S.C. 1101, 1103, 1304, 1356; 31 U.S.C. 9701; E.O 12356, 47 FR 14874, 15557, 3 CFR, 1982 Comp., p. 166; 8 CFR part 2.

2. Section 103.1 is amended by:

a. Revising paragraph (f)(3))(iii)(W);

b. Removing the word ''and'' at the end of paragraph (f)(3)(iii)(MM);

c. Removing the period at the end of paragraph (f)(3)(iii)(NN) and adding ''; and'' in its place; and by

d. Adding a new paragraph (f)(3)(iii)(OO) to read as follows:

§ 103.1 Delegation of authority.

* * * * *

(f) * * *

(3) * * *

(iii) * * *

(W) Revoking approval of certain applications, as provided in §§ 214.2, 214.6, and 214.11 of this chapter;

* * * * *

(OO) Applications for T nonimmigrant status under § 214.11 of this chapter.

* * * * *

3. Section 103.7(b)(1) is amended by adding, in proper alpha/numeric sequence, a new Form ''I–914,'' to read as follows:

§ 103.7 Fees.

* * * * *

(b) * * *

(1) * * *

Form I–914. For filing an application to classify an alien as a nonimmigrant under section 101(a)(15)(T) of the Act (victims of a severe form of trafficking in persons and their immediate family

members)—$200. For each immediate family member included on the same application, an additional fee of $50 per person, up to a maximum amount payable per application of $400.

* * * * *

PART 212—DOCUMENTARY REQUIREMENTS: NONIMMIGRANTS; WAIVERS; ADMISSION OF CERTAIN INADMISSIBLE ALIENS; PAROLE

4. The authority citation for part 212 continues to read as follows:

Authority: 8 U.S.C. 1101, 1102, 1103, 1182, 1184, 1187, 1225, 1226, 1227; 8 CFR part 2.

5. Section 212.1 is amended by revising paragraph (g) and adding a new paragraph (o), to read as follows:

§ 212.1 Documentary requirements for nonimmigrants.

* * * * *

(g) *Unforeseen emergency.* A nonimmigrant seeking admission to the United States must present an unexpired visa and a passport valid for the amount of time set forth in section 212(a)(7)(B) of the Act, or a valid border crossing identification card at the time of application for admission, unless the nonimmigrant satisfies the requirements described in one or more of the paragraphs (a) through (f), (i), or (o) of this section. Upon a nonimmigrant's application on Form I–193, a district director at a port of entry may, in the exercise of his or her discretion, on a case-by-case basis, waive the documentary requirements, if satisfied that the nonimmigrant cannot present the required documents because of an unforeseen emergency. The district director or the Deputy Commissioner may at any time revoke a waiver previously authorized pursuant to this paragraph and notify the nonimmigrant in writing to that effect.

* * * * *

(o) *Alien in T–2 through T–4 classification.* Individuals seeking T–2 through T–4 nonimmigrant status may avail themselves of the provisions of paragraph (g) of this section, except that the authority to waive documentary requirements resides with the Service Center.

6. Section 212.16 is added, to read as follows:

§ 212.16 Applications for exercise of discretion relating to T nonimmigrant status.

(a) *Filing the waiver application.* An alien applying for the exercise of discretion under section 212(d)(13) or (d)(3)(B) of the Act (waivers of inadmissibility) in connection with an application for T nonimmigrant status shall submit Form I–192, with the appropriate fee in accordance with § 103.7(b)(1) of this chapter or an application for a fee waiver, to the Service with the completed Form I–914 application package for status under section 101(a)(15)(T)(i) of the Act.

(b) *Treatment of waiver application.* (1) The Service shall determine whether a ground of inadmissibility exists with respect to the alien applying for T nonimmigrant status. If a ground of inadmissibility is found, the Service shall determine if it is in the national interest to exercise discretion to waive the ground of inadmissibility, except for grounds of inadmissibility based upon sections 212(a)(3), 212(a)(10)(C) and 212(a)(10)(E) of the Act, which the Commissioner may not waive. Special consideration will be given to the granting of a waiver of a ground of inadmissibility where the activities rendering the alien inadmissible were caused by or incident to the victimization described under section 101(a)(15)(T)(i) of the Act.

(2) In the case of applicants inadmissible on criminal and related grounds under section 212(a)(2) of the Act, the Service will only exercise its discretion in exceptional cases unless the criminal activities rendering the alien inadmissible were caused by or were incident to the victimization described under section 101(a)(15)(T)(i) of the Act.

(3) An application for waiver of a ground of inadmissibility for T nonimmigrant status (other than under section 212(a)(6) of the Act) will be granted only in exceptional cases when the ground of inadmissibility would prevent or limit the ability of the applicant to adjust to permanent resident status after the conclusion of 3 years.

(4) The Service shall have sole discretion to grant or deny a waiver, and there shall be no appeal of a decision to deny a waiver. However, nothing in this paragraph (b) is intended to prevent an applicant from re-filing a request for a waiver of a ground of inadmissibility in appropriate cases.

(c) *Incident to victimization.* When an applicant for status under section 101(a)(15)(T) of the Act seeks a waiver of a ground of inadmissibility under section 212(d)(13) of the Act on grounds other than those described in sections 212(a)(1) and (a)(4) of the Act, the applicant must establish that the activities rendering him or her inadmissible were caused by, or were incident to, the victimization described in section 101(a)(15)(T)(i)(I) of the Act.

(d) *Revocation.* The Commissioner may at any time revoke a waiver previously authorized under section 212(d) of the Act. Under no circumstances shall the alien or any party acting on his or her behalf have a right to appeal from a decision to revoke a waiver.

PART 214—NONIMMIGRANT CLASSES

7. The authority citation for part 214 is revised to read as follows:

Authority: 8 U.S.C. 1101, 1101 note, 1103, 1182, 1184, 1186a, 1187, 1221, 1281, 1282; Section 643 of Pub. L. 104–208, 110 Stat. 3009–708; Pub. L. 106–386, 114 Stat. 1477–1480; Section 141 of the Compacts of Free Association with the Federated States of Micronesia and the Republic of the Marshall Islands, and with the Government of Palau, 48 U.S.C. 1901 note, and 1931 note, respectively; 8 CFR part 2.

8. Section 214.1 is amended by:

a. Removing the ''and'' at the end of paragraph (a)(1)(vi);

b. Removing the period at the end of paragraph (a)(1)(vii) and adding '';'' in its place;

c. Adding paragraph (a)(1)(viii); and by

d. Adding in proper numeric/alphabetical sequence in paragraph (a)(2) the classification designations, to read as follows:

§ 214.1 Requirements for admission, extension, and maintenance of status.

(a) * * *

(1) * * *

(viii) Section 101(a)(15)(T)(ii) is divided into (T)(ii), (T)(iii) and (T)(iv) for the spouse, child, and parent, respectively, of a nonimmigrant classified under section 101(a)(15)(T)(i); and

(2) * * *

* * * * *

101(a)(15)(T)(i)—T–1
101(a)(15)(T)(ii)—T–2
101(a)(15)(T)(iii)—T–3
101(a)(15)(T)(iv)—T–4

* * * * *

9. A new § 214.11 is added to read as follows:

§ 214.11 Alien victims of severe forms of trafficking in persons.

(a) *Definitions.* The Service shall apply the following definitions as provided in sections 103 and 107(e) of the Trafficking Victims Protection Act (TVPA) with due regard for the definitions and application of these terms in 28 CFR part 1100 and the provisions of chapter 77 of title 18, United States Code:

Bona fide application means an application for T–1 nonimmigrant status

as to which, after initial review, the Service has determined that there appears to be no instance of fraud in the application, the application is complete, properly filed, contains an LEA endorsement or credible secondary evidence, includes completed fingerprint and background checks, and presents *prima facie* evidence to show eligibility for T nonimmigrant status, including admissibility.

Child means a person described as such in section 101(b)(1) of the Act.

Coercion means threats of serious harm to or physical restraint against any person; any scheme, plan, or pattern intended to cause a person to believe that failure to perform an act would result in serious harm to or physical restraint against any person; or the abuse or threatened abuse of the legal process.

Commercial sex act means any sex act on account of which anything of value is given to or received by any person.

Debt bondage means the status or condition of a debtor arising from a pledge by the debtor of his or her personal services or of those of a person under his or her control as a security for debt, if the value of those services as reasonably assessed is not applied toward the liquidation of the debt or the length and nature of those services are not respectively limited and defined.

Immediate family member means the spouse or a child of a victim of a severe form of trafficking in persons, and, in the case of a victim of a severe form of trafficking in persons who is under 21 years of age, a parent of the victim.

Involuntary servitude means a condition of servitude induced by means of any scheme, plan, or pattern intended to cause a person to believe that, if the person did not enter into or continue in such condition, that person or another person would suffer serious harm or physical restraint; or the abuse or threatened abuse of legal process. Accordingly, involuntary servitude includes ''a condition of servitude in which the victim is forced to work for the defendant by the use or threat of physical restraint or physical injury, or by the use or threat of coercion through law or the legal process. This definition encompasses those cases in which the defendant holds the victim in servitude by placing the victim in fear of such physical restraint or injury or legal coercion.'' (*United States* v. *Kozminski,* 487 U.S. 931, 952 (1988)).

Law Enforcement Agency (LEA) means any Federal law enforcement agency that has the responsibility and authority for the detection, investigation, or prosecution of severe forms of trafficking in persons. LEAs include the following components of the Department of Justice: the United States Attorneys' Offices, the Civil Rights and Criminal Divisions, the Federal Bureau of Investigation (FBI), the Immigration and Naturalization Service (Service), and the United States Marshals Service. The Diplomatic Security Service, Department of State, also is an LEA.

Law Enforcement Agency (LEA) endorsement means Supplement B, *Declaration of Law Enforcement Officer for Victim of Trafficking in Persons* of Form I–914, *Application for T Nonimmigrant Status.*

Peonage means a status or condition of involuntary servitude based upon real or alleged indebtedness.

Reasonable request for assistance means a reasonable request made by a law enforcement officer or prosecutor to a victim of a severe form of trafficking in persons to assist law enforcement authorities in the investigation or prosecution of the acts of trafficking in persons. The ''reasonableness'' of the request depends on the totality of the circumstances taking into account general law enforcement and prosecutorial practices, the nature of the victimization, and the specific circumstances of the victim, including fear, severe traumatization (both mental and physical), and the age and maturity of young victims.

Severe forms of trafficking in persons means sex trafficking in which a commercial sex act is induced by force, fraud, or coercion, or in which the person induced to perform such act has not attained 18 years of age; or the recruitment, harboring, transportation, provision, or obtaining of a person for labor or services, through the use of force, fraud, or coercion for the purpose of subjection to involuntary servitude, peonage, debt bondage, or slavery.

Sex trafficking means the recruitment, harboring, transportation, provision, or obtaining of a person for the purpose of a commercial sex act.

TVPA means the Trafficking Victims Protection Act of 2000, Division A of the VTVPA, Pub. L. 106–386.

United States means the continental United States, Alaska, Hawaii, Puerto Rico, Guam, and the United States Virgin Islands.

Victim of a severe form of trafficking in persons means an alien who is or has been subject to a severe form of trafficking in persons, as defined in section 103 of the VTVPA and in this section.

VTVPA means the Victims of Trafficking and Violence Protection Act of 2000, Pub. L. 106–386.

(b) *Eligibility.* Under section 101(a)(15)(T)(i) of the Act, and subject to section 214(n) of the Act, the Service may classify an alien, if otherwise admissible, as a T–1 nonimmigrant if the alien demonstrates that he or she:

(1) Is or has been a victim of a severe form of trafficking in persons;

(2) Is physically present in the United States, American Samoa, or the Commonwealth of the Northern Mariana Islands, or at a port-of-entry thereto, on account of such trafficking in persons;

(3) Either:

(i) Has complied with any reasonable request for assistance in the investigation or prosecution of acts of such trafficking in persons, or

(ii) Is less than 15 years of age; and

(4) Would suffer extreme hardship involving unusual and severe harm upon removal, as described in paragraph (i) of this section.

(c) *Aliens ineligible for T nonimmigrant status.* No alien, otherwise admissible, shall be eligible to receive a T nonimmigrant status under section 101(a)(15)(T) of the Act if there is substantial reason to believe that the alien has committed an act of a severe form of trafficking in persons.

(d) *Application procedures for T status.*

(1) *Filing an application.* An applicant seeking T nonimmigrant status shall submit, by mail, a complete application package containing Form I–914, *Application for T Nonimmigrant Status,* along with all necessary supporting documentation, to the Service.

(2) *Contents of the application package.* In addition to Form I–914, an application package must include the following:

(i) The proper fee for Form I–914 as provided in § 103.7(b)(1) of this chapter, or an application for a fee waiver as provided in § 103.7(c) of this chapter;

(ii) Three current photographs;

(iii) The fingerprint fee as provided in § 103.7(b)(1) of this chapter;

(iv) Evidence demonstrating that the applicant is a victim of a severe form of trafficking in persons as set forth in paragraph (f) of this section;

(v) Evidence that the alien is physically present in the United States on account of a severe form of trafficking in persons as set forth in paragraph (g) of this section;

(vi) Evidence that the applicant has complied with any reasonable request for assistance in the investigation or prosecution of acts of severe forms of trafficking in persons, as set forth in paragraph (h) of this section, or has not attained 15 years of age; and

(vii) Evidence that the applicant would suffer extreme hardship involving unusual and severe harm if he

or she were removed from the United States, as set forth in paragraph (i) of this section.

(3) *Evidentiary standards.* The applicant may submit any credible evidence relevant to the essential elements of the T nonimmigrant status. Original documents or copies may be submitted as set forth in § 103.2(b)(4) and (b)(5) of this chapter. Any document containing text in a foreign language shall be submitted in accordance with § 103.2(b)(3) of this chapter.

(4) *Filing deadline in cases in which victimization occurred prior to October 28, 2000.* Victims of a severe form of trafficking in persons whose victimization occurred prior to October 28, 2000 must file a completed application within one (1) year of January 31, 2002 in order to be eligible to receive T–1 nonimmigrant status. If the victimization occurred prior to October 28, 2000, an alien who was a child at the time he or she was a victim of a severe form of trafficking in persons must file a T status application within one (1) year of his or her 21st birthday, or one (1) year of January 31, 2002, whichever is later. For purposes of determining the filing deadline, an act of severe form of trafficking in persons will be deemed to have occurred on the last day in which an act constituting an element of a severe form of trafficking in persons, as defined in paragraph (a) of this section, occurred. If the applicant misses the deadline, he or she must show that exceptional circumstances prevented him or her from filing in a timely manner. Exceptional circumstances may include severe trauma, either psychological or physical, that prevented the victim from applying within the allotted time.

(5) *Fingerprint procedure.* All applicants for T nonimmigrant status must be fingerprinted for the purpose of conducting a criminal background check in accordance with the process and procedures described in § 103.2(e) of this chapter. After submitting an application with fee to the Service, the applicant will be notified of the proper time and location to appear for fingerprinting.

(6) *Personal interview.* After the filing of an application for T nonimmigrant status, the Service may require an applicant to participate in a personal interview. The necessity of an interview is to be determined solely by the Service. All interviews will be conducted in person at a Service-designated location. Every effort will be made to schedule the interview in a location convenient to the applicant.

(7) *Failure to appear for an interview or failure to follow fingerprinting requirements.*

(i) Failure to appear for a scheduled interview without prior authorization or to comply with fingerprint processing requirements may result in the denial of the application.

(ii) Failure to appear shall be excused if the notice of the interview or fingerprint appointment was not mailed to the applicant's current address and such address had been provided to the Service unless the Service determines that the applicant received reasonable notice of the appointment. The applicant must notify the Service of any change of address in accordance with § 265.1 of this chapter prior to the date on which the notice of the interview or fingerprint appointment was mailed to the applicant.

(iii) Failure to appear at the interview or fingerprint appointment may be excused, at the discretion of the Service, if the applicant promptly contacts the Service and demonstrates that such failure to appear was the result of exceptional circumstances.

(8) *Aliens in pending immigration proceedings.* Individuals who believe they are victims of severe forms of trafficking in persons and who are in pending immigration proceedings must inform the Service if they intend to apply for T nonimmigrant status under this section. With the concurrence of Service counsel, a victim of a severe form of trafficking in persons in proceedings before an immigration judge or the Board of Immigration Appeals (Board) may request that the proceedings be administratively closed (or that a motion to reopen or motion to reconsider be indefinitely continued) in order to allow the alien to pursue an application for T nonimmigrant status with the Service. If the alien appears eligible for T nonimmigrant status, the immigration judge or the Board, whichever has jurisdiction, may grant such a request to administratively close the proceeding or continue a motion to reopen or motion to reconsider indefinitely. In the event the Service finds an alien ineligible for T–1 nonimmigrant status, the Service may recommence proceedings that have been administratively closed by filing a motion to re-calendar with the immigration court or a motion to reinstate with the Board. If the alien is in Service custody pending the completion of immigration proceedings, the Service may continue to detain the alien until a decision has been rendered on the application. An alien who is in custody and requests bond or a bond redetermination will be governed by the provisions of part 236 of this chapter.

(9) *T applicants with final orders of exclusion, deportation or removal.* An alien who is the subject of a final order is not precluded from filing an application for T–1 nonimmigrant status directly with the Service. The filing of an application for T nonimmigrant status has no effect on the Service's execution of a final order, although the alien may file a request for stay of removal pursuant to § 241.6(a) of this chapter. However, if the Service subsequently determines, under the procedures of this section, that the application is *bona fide,* the Service will automatically stay execution of the final order of deportation, exclusion, or removal, and the stay will remain in effect until a final decision is made on the T–1 application. The time during which such a stay is in effect shall not be counted in determining the reasonableness of the duration of the alien's continued detention under the standards of § 241.4 of this chapter. If the T–1 application is denied, the stay of the final order is deemed lifted as of the date of such denial, without regard to whether the alien appeals the decision. If the Service grants an application for T nonimmigrant status, the final order shall be deemed canceled by operation of law as of the date of the approval.

(e) *Dissemination of information.* In appropriate cases, and in accordance with Department of Justice policies, the Service shall make information from applications for T–1 nonimmigrant status available to other Law Enforcement Agencies (LEAs) with the authority to detect, investigate, or prosecute severe forms of trafficking in persons. The Service shall coordinate with the appropriate Department of Justice component responsible for prosecution in all cases where there is a current or impending prosecution of any defendants who may be charged with severe forms of trafficking in persons crimes in connection with the victimization of the applicant to ensure that the Department of Justice component responsible for prosecution has access to all witness statements provided by the applicant in connection with the application for T–1 nonimmigrant status, and any other documents needed to facilitate investigation or prosecution of such severe forms of trafficking in persons offenses.

(f) *Evidence demonstrating that the applicant is a victim of a severe form of trafficking in persons.* The applicant must submit evidence that fully establishes eligibility for each element

of the T nonimmigrant status to the satisfaction of the Attorney General. First, an alien must demonstrate that he or she is a victim of a severe form of trafficking in persons. The applicant may satisfy this requirement either by submitting an LEA endorsement, by demonstrating that the Service previously has arranged for the alien's continued presence under 28 CFR 1100.35, or by submitting sufficient credible secondary evidence, describing the nature and scope of any force, fraud, or coercion used against the victim (this showing is not necessary if the person induced to perform a commercial sex act is under the age of 18). An application must contain a statement by the applicant describing the facts of his or her victimization. In determining whether an applicant is a victim of a severe form of trafficking in persons, the Service will consider all credible and relevant evidence.

(1) *Law Enforcement Agency endorsement.* An LEA endorsement is not required. However, if provided, it must be submitted by an appropriate law enforcement official on Supplement B, *Declaration of Law Enforcement Officer for Victim of Trafficking in Persons,* of Form I–914. The LEA endorsement must be filled out completely in accordance with the instructions contained on the form and must attach the results of any name or database inquiry performed. In order to provide persuasive evidence, the LEA endorsement must contain a description of the victimization upon which the application is based (including the dates the severe forms of trafficking in persons and victimization occurred), and be signed by a supervising official responsible for the investigation or prosecution of severe forms of trafficking in persons. The LEA endorsement must address whether the victim had been recruited, harbored, transported, provided, or obtained specifically for either labor or services, or for the purposes of a commercial sex act. The traffickers must have used force, fraud, or coercion to make the victim engage in the intended labor or services, or (for those 18 or older) the intended commercial sex act. The situations involving labor or services must rise to the level of involuntary servitude, peonage, debt bondage, or slavery. The decision of whether or not to complete an LEA endorsement for an applicant shall be at the discretion of the LEA.

(2) *Primary evidence of victim status.* The Service will consider an LEA endorsement as primary evidence that the applicant has been the victim of a severe form of trafficking in persons provided that the details contained in the endorsement meet the definition of a severe form of trafficking in persons under this section. In the alternative, documentation from the Service granting the applicant continued presence in accordance with 28 CFR 1100.35 will be considered as primary evidence that the applicant has been the victim of a severe form of trafficking in persons, unless the Service has revoked the continued presence based on a determination that the applicant is not a victim of a severe form of trafficking in persons.

(3) *Secondary evidence of victim status; Affidavits.* Credible secondary evidence and affidavits may be submitted to explain the nonexistence or unavailability of the primary evidence and to otherwise establish the requirement that the applicant be a victim of a severe form of trafficking in persons. The secondary evidence must include an original statement by the applicant indicating that he or she is a victim of a severe form of trafficking in persons; credible evidence of victimization and cooperation, describing what the alien has done to report the crime to an LEA; and a statement indicating whether similar records for the time and place of the crime are available. The statement or evidence should demonstrate that good faith attempts were made to obtain the LEA endorsement, including what efforts the applicant undertook to accomplish these attempts. Applicants are encouraged to provide and document all credible evidence, because there is no guarantee that a particular piece of evidence will result in a finding that the applicant was a victim of a severe form of trafficking in persons. If the applicant does not submit an LEA endorsement, the Service will proceed with the adjudication based on the secondary evidence and affidavits submitted. A non-exhaustive list of secondary evidence includes trial transcripts, court documents, police reports, news articles, and copies of reimbursement forms for travel to and from court. In addition, applicants may also submit their own affidavit and the affidavits of other witnesses. The determination of what evidence is credible and the weight to be given that evidence shall be within the sole discretion of the Service.

(4) *Obtaining an LEA endorsement.* A victim of a severe form of trafficking in persons who does not have an LEA endorsement should contact the LEA to which the alien has provided assistance to request an endorsement. If the applicant has not had contact with an LEA regarding the acts of severe forms of trafficking in persons, the applicant should promptly contact the nearest Service or Federal Bureau of Investigation (FBI) field office or U.S. Attorneys' Office to file a complaint, assist in the investigation or prosecution of acts of severe forms of trafficking in persons, and request an LEA endorsement. If the applicant was recently liberated from the trafficking in persons situation, the applicant should ask the LEA for an endorsement. Alternatively, the applicant may contact the Department of Justice, Civil Rights Division, Trafficking in Persons and Worker Exploitation Task Force complaint hotline at 1–888–428–7581 to file a complaint and be referred to an LEA.

(g) *Physical presence on account of trafficking in persons.* The applicant must establish that he or she is physically present in the United States, American Samoa, or the Commonwealth of the Northern Mariana Islands, or at a port-of-entry thereto on account of such trafficking, and that he or she is a victim of a severe form of trafficking in persons that forms the basis for the application. Specifically, the physical presence requirement reaches an alien who: is present because he or she is being subjected to a severe form of trafficking in persons; was recently liberated from a severe form of trafficking in persons; or was subject to severe forms of trafficking in persons at some point in the past and whose continuing presence in the United States is directly related to the original trafficking in persons.

(1) *In general.* The evidence and statements included with the application must state the date and place (if known) and the manner and purpose (if known) for which the applicant entered the United States, American Samoa, or the Commonwealth of the Northern Mariana Islands, or a port-of-entry thereto, and demonstrate that the applicant is present now on account of the applicant's victimization as described in paragraph (f) of this section and section 101(a)(15)(T)(i)(I) of the Act.

(2) *Opportunity to depart.* If the alien has escaped the traffickers before law enforcement became involved in the matter, he or she must show that he or she did not have a clear chance to leave the United States in the interim. The Service will consider whether an applicant had a clear chance to leave in light of the individual applicant's circumstances. Information relevant to this determination may include, but is not limited to, circumstances attributable to the trafficking in persons situation, such as trauma, injury, lack of resources, or travel documents that have

been seized by the traffickers. This determination may reach both those who entered the United States lawfully and those who entered without being admitted or paroled. The Service will consider all evidence presented to determine the physical presence requirement, including asking the alien to answer questions on Form I–914, about when he or she escaped from the trafficker, what activities he or she has undertaken since that time, including the steps he or she may have taken to deal with the consequences of having been trafficked, and the applicant's ability to leave the United States.

(3) *Departure from the United States.* An alien who has voluntarily left (or has been removed from) the United States at any time after the act of a severe form of trafficking in persons shall be deemed not to be present in the United States as a result of such trafficking in persons unless the alien's reentry into the United States was the result of the continued victimization of the alien or a new incident of a severe form of trafficking in persons described in section 101(a)(15)(T)(i)(I) of the Act.

(h) *Compliance with reasonable requests from a law enforcement agency for assistance in the investigation or prosecution.* Except as provided in paragraph (h)(3) of this section, the applicant must submit evidence that fully establishes that he or she has complied with any reasonable request for assistance in the investigation or prosecution of acts of severe forms of trafficking in persons. As provided in paragraph (h)(3) of this section, if the victim of a severe form of trafficking in persons is under age 15, he or she is not required to comply with any reasonable request for assistance in order to be eligible for T nonimmigrant status, but may cooperate at his or her discretion.

(1) *Primary evidence of compliance with law enforcement requests.* An LEA endorsement describing the assistance provided by the applicant is not required evidence. However, if an LEA endorsement is provided as set forth in paragraph (f)(1) of this section, it will be considered primary evidence that the applicant has complied with any reasonable request in the investigation or prosecution of the severe form of trafficking in persons of which the applicant was a victim. If the Service has reason to believe that the applicant has not complied with any reasonable request for assistance by the endorsing LEA or other LEAs, the Service will contact the LEA and both the Service and the LEA will take all practical steps to reach a resolution acceptable to both agencies. The Service may, at its discretion, interview the alien regarding the evidence for and against the compliance, and allow the alien to submit additional evidence of such compliance. If the Service determines that the alien has not complied with any reasonable request for assistance, then the application will be denied, and any approved application based on the LEA endorsement will be revoked pursuant to this section.

(2) *Secondary evidence of compliance with law enforcement requests; Affidavits.* Credible secondary evidence and affidavits may be submitted to show the nonexistence or unavailability of the primary evidence and to otherwise establish the requirement that the applicant comply with any reasonable request for assistance in the investigation or prosecution of that severe form of trafficking in persons. The secondary evidence must include an original statement by the applicant that indicates the reason the LEA endorsement does not exist or is unavailable, and whether similar records documenting any assistance provided by the applicant are available. The statement or evidence must show that an LEA that has responsibility and authority for the detection, investigation, or prosecution of severe forms of trafficking in persons has information about such trafficking in persons, that the victim has complied with any reasonable request for assistance in the investigation or prosecution of such acts of trafficking, and, if the victim did not report the crime at the time, why the crime was not previously reported. The statement or evidence should demonstrate that good faith attempts were made to obtain the LEA endorsement, including what efforts the applicant undertook to accomplish these attempts. In addition, applicants may also submit their own affidavit and the affidavits of other witnesses. The determination of what evidence is credible and the weight to be given that evidence shall be within the sole discretion of the Service. Applicants are encouraged to describe and document all applicable factors, since there is no guarantee that a particular reason will result in a finding that the applicant has complied with reasonable requests. An applicant who never has had contact with an LEA regarding the acts of severe forms of trafficking in persons will not be eligible for T–1 nonimmigrant status.

(3) *Exception for applicants under the age of 15.* Applicants under the age of 15 are not required to demonstrate compliance with the requirement of any reasonable request for assistance in the investigation and prosecution of acts of severe forms of trafficking in persons. Applicants under the age of 15 must provide evidence of their age. Primary evidence that a victim of a severe form of trafficking in persons has not yet reached the age of 15 would be an official copy of the alien's birth certificate, a passport, or a certified medical opinion. Secondary evidence regarding the age of the applicant also may be submitted in accordance with § 103.2(b)(2)(i) of this chapter. An applicant under the age of 15 still must provide evidence demonstrating that he or she satisfies the other necessary requirements, including that he or she is the victim of a severe form of trafficking in persons and faces extreme hardship involving unusual and severe harm if removed from the United States.

(i) *Evidence of extreme hardship involving unusual and severe harm upon removal.* To be eligible for T–1 nonimmigrant status under section 101(a)(15)(T)(i) of the Act, an applicant must demonstrate that removal from the United States would subject the applicant to extreme hardship involving unusual and severe harm.

(1) *Standard.* Extreme hardship involving unusual and severe harm is a higher standard than that of extreme hardship as described in § 240.58 of this chapter. A finding of extreme hardship involving unusual and severe harm may not be based upon current or future economic detriment, or the lack of, or disruption to, social or economic opportunities. Factors that may be considered in evaluating whether removal would result in extreme hardship involving unusual and severe harm should take into account both traditional extreme hardship factors and those factors associated with having been a victim of a severe form of trafficking in persons. These factors include, but are not limited to, the following:

(i) The age and personal circumstances of the applicant;

(ii) Serious physical or mental illness of the applicant that necessitates medical or psychological attention not reasonably available in the foreign country;

(iii) The nature and extent of the physical and psychological consequences of severe forms of trafficking in persons;

(iv) The impact of the loss of access to the United States courts and the criminal justice system for purposes relating to the incident of severe forms of trafficking in persons or other crimes perpetrated against the applicant, including criminal and civil redress for acts of trafficking in persons, criminal prosecution, restitution, and protection;

(v) The reasonable expectation that the existence of laws, social practices, or customs in the foreign country to which the applicant would be returned would penalize the applicant severely for having been the victim of a severe form of trafficking in persons;

(vi) The likelihood of re-victimization and the need, ability, or willingness of foreign authorities to protect the applicant;

(vii) The likelihood that the trafficker in persons or others acting on behalf of the trafficker in the foreign country would severely harm the applicant; and

(viii) The likelihood that the applicant's individual safety would be seriously threatened by the existence of civil unrest or armed conflict as demonstrated by the designation of Temporary Protected Status, under section 244 of the Act, or the granting of other relevant protections.

(2) *Evidence.* An applicant is encouraged to describe and document all factors that may be relevant to his or her case, since there is no guarantee that a particular reason or reasons will result in a finding that removal would cause extreme hardship involving unusual and severe harm to the applicant. Hardship to persons other than the alien victim of a severe form of trafficking in persons cannot be considered in determining whether an applicant would suffer extreme hardship involving unusual and severe harm.

(3) *Evaluation.* The Service will evaluate on a case-by-case basis, after a review of the evidence, whether the applicant has demonstrated extreme hardship involving unusual or severe harm. The Service will consider all credible evidence submitted regarding the nature and scope of the hardship should the applicant be removed from the United States, including evidence of hardship arising from circumstances surrounding the victimization as described in section 101(a)(15)(T)(i)(I) of the Act and any other circumstances. In appropriate cases, the Service may consider evidence from relevant country condition reports and any other public or private sources of information. The determination that extreme hardship involving unusual or severe harm to the alien exists is to be made solely by the Service.

(j) *Waiver of grounds of inadmissibility.* An application for a waiver of inadmissibility under section 212(d)(13) or section 212(d)(3) of the Act must be filed in accordance with § 212.16 of this chapter, and submitted to the Service with the completed application package.

(k) *Bona fide application for T–1 nonimmigrant status.*—(1) Criteria. Once an application is submitted to the Service, the Service will conduct an initial review to determine if the application is a *bona fide* application for T nonimmigrant status. An application shall be determined to be *bona fide* if, after initial review, it is properly filed, there appears to be no instance of fraud in the application, the application is complete (including the LEA endorsement or other secondary evidence), the application presents *prima facie* evidence of each element to show eligibility for T–1 nonimmigrant status, and the Service has completed the necessary fingerprinting and criminal background checks. If an alien is inadmissible under section 212(a) of the Act, the application will not be deemed to be *bona fide* unless the only grounds of inadmissibility are those under the circumstances described in section 212(d)(13) of the Act, or unless the Service has granted a waiver of inadmissibility on any other grounds. All waivers are discretionary and require a request for a waiver. Under section 212(d)(13), an application can be *bona fide* before the waiver is granted. This is not the case under other grounds of inadmissibility.

(2) *Determination by the Service.* An application for T–1 status under this section will not be treated as a *bona fide* application until the Service has provided the notice described in paragraph (k)(3) of this section. In the event that an application is incomplete, the Service will request the additional information as provided in § 103.2(b)(8) of this chapter. If the application is complete, but does not present sufficient evidence to establish *prima facie* eligibility for each required element of T nonimmigrant status, the Service will adjudicate the application on the basis of the evidence presented, in accordance with the procedures of this section.

(3) *Notice to alien.* Once an application is determined to be a *bona fide* application for a T–1 nonimmigrant status, the Service will provide written confirmation to the applicant.

(4) *Stay of final order of exclusion, deportation, or removal.* A determination by the Service that an application for T–1 nonimmigrant status is *bona fide* automatically stays the execution of any final order of exclusion, deportation, or removal. This stay shall remain in effect until there is a final decision on the T application. The filing of an application for T nonimmigrant status does not stay the execution of a final order unless the Service has determined that the application is *bona fide*. Neither an immigration judge nor the Board of Immigration Appeals (Board) has jurisdiction to adjudicate an application for a stay of execution, deportation, or removal order, on the basis of the filing of an application for T nonimmigrant status.

(l) *Review and decision on applications.*—(1) *De novo review.* The Service shall conduct a de novo review of all evidence submitted and is not bound by its previous factual determinations as to any essential elements of the T nonimmigrant status application. Evidence previously submitted for this and other immigration benefits or relief may be used by the Service in evaluating the eligibility of an applicant for T nonimmigrant status. However, the Service will not be bound by its previous factual determinations as to any essential elements of the T classification. The Service will determine, in its sole discretion, the evidentiary value of previously or concurrently submitted evidence.

(2) *Burden of proof.* At all stages of the processing of an application for any benefits under T nonimmigrant status, the burden shall be on the applicant to present to the Service evidence that fully establishes eligibility for the desired benefit.

(3) *Decision.* After completing its review of the application, the Service shall issue a written decision granting or denying the application. If the Service determines that the applicant has met the requirements for T–1 nonimmigrant status, the Service shall grant the application, subject to the annual limitation as provided in paragraph (m) of this section. Along with the approval, the Service will include a list of nongovernmental organizations to which the applicant can refer regarding the alien's options while in the United States and resources available to the alien.

(4) *Work authorization.* When the Service grants an application for T–1 nonimmigrant status, the Service will provide the alien with an Employment Authorization Document incident to that status, which shall extend concurrently with the duration of the alien's T–1 nonimmigrant status.

(m) *Annual cap.* In accordance with section 214(n)(2) of the Act, the total number of principal aliens issued T–1 nonimmigrant status may not exceed 5,000 in any fiscal year.

(1) *Issuance of T–1 nonimmigrant status.* Once the cap is reached in any fiscal year, the Service will continue to review and consider applications in the order they are received. The Service will determine if the applicants are eligible for T–1 nonimmigrant status, but will

not issue T–1 nonimmigrant status at that time. The revocation of an alien's T–1 status will have no effect on the annual cap.

(2) *Waiting list.* All eligible applicants who, due solely to the cap, are not granted T–1 nonimmigrant status shall be placed on a waiting list and will receive notice of such placement. While on the waiting list, the applicant shall maintain his or her current means to prevent removal (deferred action, parole, or stay of removal) and any employment authorization, subject to any limits imposed on that authorization. Priority on the waiting list is determined by the date the application was properly filed, with the oldest applications receiving the highest priority. As new classifications become available in subsequent years, the Service will issue them to applicants on the waiting list, in the order in which the applications were properly filed, providing the applicant remains admissible. The Service may require new fingerprint and criminal history checks before issuing an approval. After T–1 nonimmigrant status has been issued to qualifying applicants on the waiting list, any remaining T–1 nonimmigrant numbers will be issued to new qualifying applicants in the order that the applications were properly filed.

(n) [Reserved]

(o) *Admission of the T–1 applicant's immediate family members.*—(1) *Eligibility.* Subject to section 214(n) of the Act, an alien who has applied for or been granted T–1 nonimmigrant status may apply for admission of an immediate family member, who is otherwise admissible to the United States, in a T–2 (spouse) or T–3 (child) derivative status (and, in the case of a T–1 principal applicant who is a child, a T–4 (parent) derivative status), if accompanying or following to join the principal alien. The applicant must submit evidence sufficient to demonstrate that:

(i) The alien for whom T–2, T–3, or T–4 status is being sought is an immediate family member of a T–1 nonimmigrant, as defined in paragraph (a) of this section, and is otherwise eligible for that status; and

(ii) The immediate family member or the T–1 principal would suffer extreme hardship, as described in paragraph (o)(5) of this section, if the immediate family member was not allowed to accompany or follow to join the principal T–1 nonimmigrant.

(2) *Filing procedures.* A T–1 principal may apply for T–2, T–3, or T–4 nonimmigrant status for an immediate family member by submitting Form I–914 and all necessary documentation by mail, including Supplement A, to the Service. The application for derivative T nonimmigrant status for eligible family members can be filed on the same application as the T–1 application, or in a separate application filed at a subsequent time.

(3) *Contents of the application package for an immediate family member.* In addition to Form I–914, an application for T–2, T–3, or T–4 nonimmigrant status must include the following:

(i) The proper fee for Form I–914 as provided in § 103.7(b)(1) of this chapter, or an application for a fee waiver as provided in § 103.7(c) of this chapter;

(ii) Three current photographs;

(iii) The fingerprint fee as provided in § 103.2(e) of this chapter for each immediate family member;

(iv) Evidence demonstrating the relationship of an immediate family member, as provided in paragraph (o)(4) of this section; and

(v) Evidence demonstrating extreme hardship as provided in paragraph (o)(5) of this section.

(4) *Relationship.* The relationship must exist at the time the application for the T–1 nonimmigrant status was filed, and must continue to exist at the time of the application for T–2, T–3, or T–4 status and at the time of the immediate family member's subsequent admission to the United States. If the T–1 principal alien proves that he or she became the parent of a child after the T–1 nonimmigrant status was filed, the child shall be eligible to accompany or follow to join the T–1 principal.

(5) *Evidence demonstrating extreme hardship for immediate family members.* The application must demonstrate that each alien for whom T–2, T–3, or T–4 status is being sought, or the principal T–1 applicant, would suffer extreme hardship if the immediate family member was not admitted to the United States or was removed from the United States (if already present). When the immediate family members are following to join the principal, the extreme hardship must be substantially different than the hardship generally experienced by other residents of their country of origin who are not victims of a severe form of trafficking in persons. The Service will consider all credible evidence of extreme hardship to the T–1 recipient or the individual immediate family members. The determination of the extreme hardship claim will be evaluated on a case-by-case basis, in accordance with the factors outlined in § 240.58 of this chapter. Applicants are encouraged to raise and document all applicable factors, since there is no guarantee that a particular reason or reasons will result in a finding of extreme hardship if the applicant is not allowed to enter or remain in the United States. In addition to these factors, other factors that may be considered in evaluating extreme hardship include, but are not limited to, the following:

(i) The need to provide financial support to the principal alien;

(ii) The need for family support for a principal alien; or

(iii) The risk of serious harm, particularly bodily harm, to an immediate family member from the perpetrators of the severe forms of trafficking in persons.

(6) *Fingerprinting; interviews.* The provisions for fingerprinting and interviews in paragraphs (c)(5) through (c)(7) of this section also are applicable to applications for immediate family members.

(7) *Admissibility.* If an alien is inadmissible, an application for a waiver of inadmissibility under section 212(d)(13) or section 212(d)(3) of the Act must be filed in accordance with § 212.16 of this chapter, and submitted to the Service with the completed application package.

(8) *Review and decision.* After reviewing the application under the standards of paragraph (l) of this section, the Service shall issue a written decision granting or denying the application for T–2, T–3, or T–4 status.

(9) *Derivative grants.* Individuals who are granted T–2, T–3, or T–4 nonimmigrant status are not subject to an annual cap. Applications for T–2, T–3, or T–4 nonimmigrant status will not be granted until a T–1 status has been issued to the related principal alien.

(10) *Employment authorization.* An alien granted T–2, T–3, or T–4 nonimmigrant status may apply for employment authorization by filing Form I–765, *Application for Employment Authorization,* with the appropriate fee or an application for fee waiver, in accordance with the instructions on, or attached to, that form. For derivatives in the United States, the Form I–765 may be filed concurrently with the filing of the application for T–2, T–3, or T–4 status or at any time thereafter. If the application for employment authorization is approved, the T–2, T–3, or T–4 alien will be granted employment authorization pursuant to § 274a.12(c)(25) of this chapter. Employment authorization will last for the length of the duration of the T–1 nonimmigrant status.

(11) *Aliens outside the United States.* When the Service approves an

application for a qualifying immediate family member who is outside the United States, the Service will notify the T–1 principal alien of such approval on Form I–797, *Notice of Action.* Form I–914, Supplement A, *Supplemental Application for Immediate Family Members of T–1 Recipient,* must be forwarded to the Department of State for delivery to the American Embassy or Consulate having jurisdiction over the area in which the T–1 recipient's qualifying immediate family member is located. The supplemental form may be used by a consular officer in determining the alien's eligibility for a T–2, T–3, or T–4 visa, as appropriate.

(p) *Duration of T nonimmigrant status.*—(1) *In general.* An approved T nonimmigrant status shall expire after 3 years from the date of approval. The status is not renewable. At the time an alien is approved for T nonimmigrant status, the Service shall notify the alien that his or her nonimmigrant status will expire in 3 years from the date of the approval of the alien's Form I–914. The applicant shall immediately notify the Service of any changes in the applicant's circumstances that may affect eligibility under section 101(a)(15)(T)(i) of the Act and this section.

(2) *Information pertaining to adjustment of status.* The Service shall further notify the alien of the requirement that the T alien apply for adjustment of status within the 90 days immediately preceding the third anniversary of the alien's having been approved such nonimmigrant status, and that the failure to apply for adjustment of status as set forth in section 245(l) of the Act will result in termination of the alien's T nonimmigrant status in the United States at the end of the 3-year period. If the alien properly files for adjustment of status to that of a person admitted for permanent residence within the 90-day period immediately preceding the third anniversary of the date of the approval of the alien's Form I–914, the alien shall continue to be in a T nonimmigrant status with all the rights, privileges, and responsibilities, including employment authorization, provided to a person possessing such status until such time as a final decision is rendered on the alien's application for adjustment of status.

(q) *De novo review.* The Service shall conduct a *de novo* review of all evidence submitted at all stages in the adjudication of an application for T nonimmigrant status. Evidence previously submitted for this and other immigration benefits or relief may be used by the Service in evaluating the eligibility of an applicant for T nonimmigrant status. However, the Service will not be bound by its previous factual determinations as to any essential elements of the T classification. The Service will determine, in its sole discretion, the evidentiary value of previously or concurrently submitted evidence.

(r) *Denial of application.* Upon denial of any T application, the Service shall notify the applicant, any LEA providing an LEA endorsement, and the Department of Health and Human Service's Office of Refugee Resettlement in writing of the decision and the reasons for the denial in accordance with § 103.3 of this chapter. Upon denial of an application for T nonimmigrant status, any benefits derived as a result of having filed a *bona fide* application will automatically be revoked when the denial becomes final. If an applicant chooses to appeal the denial pursuant to the provisions of § 103.3 of this chapter, the denial will not become final until the appeal is adjudicated.

(s) *Revocation of approved T nonimmigrant status.* The alien shall immediately notify the Service of any changes in the terms and conditions of an alien's circumstances that may affect eligibility under section 101(a)(15)(T) of the Act and this section.

(1) *Grounds for notice of intent to revoke.* The Service shall send to the T nonimmigrant a notice of intent to revoke the status in relevant part if it is determined that:

(i) The T nonimmigrant violated the requirements of section 101(a)(15)(T) of the Act or this section;

(ii) The approval of the application violated this section or involved error in preparation procedure or adjudication that affects the outcome;

(iii) In the case of a T–2 spouse, the alien's divorce from the T–1 principal alien has become final;

(iv) In the case of a T–1 principal alien, an LEA with jurisdiction to detect or investigate the acts of severe forms of trafficking in persons by which the alien was victimized notifies the Service that the alien has unreasonably refused to cooperate with the investigation or prosecution of the trafficking in persons and provides the Service with a detailed explanation of its assertions in writing; or

(v) The LEA providing the LEA endorsement withdraws its endorsement or disavows the statements made therein and notifies the Service with a detailed explanation of its assertions in writing.

(2) *Notice of intent to revoke and consideration of evidence.* A district director may revoke the approval of a T nonimmigrant status at any time, even after the validity of the status has expired. The notice of intent to revoke shall be in writing and shall contain a detailed statement of the grounds for the revocation and the time period allowed for the T nonimmigrant's rebuttal. The alien may submit evidence in rebuttal within 30 days of the date of the notice. The director shall consider all relevant evidence presented in deciding whether to revoke approval of the T nonimmigrant status. The determination of what is relevant evidence and the weight to be given to that evidence shall be within the sole discretion of the director.

(3) *Revocation of T nonimmigrant status.* If, upon reconsideration, the approval previously granted is revoked, the director shall provide the alien with a written notification of the decision that explains the specific reasons for the revocation. The director also shall notify the LEA that supplied an endorsement to the alien, any consular officer having jurisdiction over the applicant, and HHS's Office of Refugee Resettlement.

(4) *Appeal of a revocation of approval.* The alien may appeal the decision to revoke the approval within 15 days after the service of notice of the revocation. All appeals of a revocation of approval will be processed and adjudicated in accordance with § 103.3 of this chapter.

(5) *Effect of revocation of T–1 status.* In the event that a principal alien's T–1 nonimmigrant status is revoked, all T nonimmigrant status holders deriving status from the revoked status automatically shall have that status revoked. In the case where a T–2, T–3, or T–4 application is still awaiting adjudication, it shall be denied. The revocation of an alien's T–1 status will have no effect on the annual cap as described in paragraph (m) of this section.

(t) *Removal proceedings without revocation.* Nothing in this section shall prohibit the Service from instituting removal proceedings under section 240 of the Act for conduct committed after admission, or for conduct or a condition that was not disclosed to the Service prior to the granting of nonimmigrant status under section 101(a)(15)(T) of the Act, including the misrepresentation of material facts in the applicant's application for T nonimmigrant status.

(u) [Reserved]

(v) *Service officer referral.* Any Service officer who receives a request from an alien seeking protection as a victim of a severe form of trafficking in persons or seeking information regarding T nonimmigrant status shall

follow the procedures for protecting and providing services to victims of severe forms of trafficking outlined in 28 CFR 1100.31. Aliens believed to be victims of a severe form of trafficking in persons shall be referred to the local Service office with responsibility for investigations relating to victims of severe forms of trafficking in persons for a consultation within 7 days. The local Service office may, in turn, refer the victim to another LEA with responsibility for investigating or prosecuting severe forms of trafficking in persons. If the alien has a credible claim to victimization, he or she will be given the opportunity to submit an application for T status pursuant to section 101(a)(15)(T) of the Act and any other benefit or protection for which he or she may be eligible. An alien determined not to have a credible claim to being a victim of a severe form of trafficking in persons and who is subject to removal will be removed in accordance with Service policy.

PART 274a—CONTROL OF EMPLOYMENT OF ALIENS

10. The authority citation for section 274a continues to read as follows:

Authority: 8 U.S.C. 1101, 1103, 1324a; 8 CFR part 2.

11. Section 274a.12 is amended by:

a. Revising the reference citation to ''(a)(15)'' to read ''(a)(16)'' in the second sentence in paragraph (a) introductory text;

b. Adding a new paragraph (a)(16); and by

c. Adding a new paragraph (c)(25), to read as follows:

§ 274a.12 Classes of aliens authorized to accept employment.

(a) * * *

(16) An alien authorized to be admitted to or remain in the United States as a nonimmigrant alien victim of a severe form of trafficking in persons under section 101(a)(15)(T)(i) of the Act. Employment authorization granted under this paragraph shall expire upon the expiration of the underlying T–1 nonimmigrant status granted by the Service.

* * * * *

(c) * * *

(25) An immediate family member of a T–1 victim of a severe form of trafficking in persons designated as a T–2, T–3 or T–4 nonimmigrant pursuant to § 214.11 of this chapter. Aliens in this status shall only be authorized to work for the duration of their T nonimmigrant status.

* * * * *

PART 299—IMMIGRATION FORMS

12. The authority citation for part 299 continues to read as follows:

Authority: 8 U.S.C. 1101, 1103; 8 CFR part 2.

13. Section 299.1 is amended by adding Form ''I–914'' to the table, in the proper alpha/numeric sequence; to read as follows:

§ 299.1 Prescribed forms.

* * * * *

Form No.	Edition date	Title
I–914	1–22–02	Application for T Nonimmigrant Status.
*	*	*

14. Section 299.5 is amended in the table by adding Form ''I–914'' to the table, in proper alpha/numeric sequence, to read as follows:

§ 299.5 Display of control numbers.

* * * * *

INS form No.	INS form title	Currently assigned OMB control No.
I–914	Application for T Nonimmigrant Status.	1115–0246
*	*	*

Dated: January 24, 2002.

John Ashcroft,

Attorney General.

Note: Form I–914 is published for informational purposes only and will not be codified in Title 8 of the Code of Federal Regulations.

BILLING CODE 4410–10–P

U.S. Department of Justice
Immigration and Naturalization Service

OMB No. 1115-0246; Expires 05/31/02

Application for T Nonimmigrant Status

(Filing Instructions for Application for T Nonimmigrant Status (Form I-914); Application for Immediate Family Member of T-1 Recipient (Form I-914, Supplement A); and Declaration of Law Enforcement Officer for Victim of Trafficking in Persons (Form I-914, Supplement B).

Index

Sections	Page No.
1. Purpose	1
2. General Filing Instructions	1
3. Required Documentation for Each Application	2
4. Completing Each Application	3
5. Fee	6
6. Where to File	6
7. Certification Instructions	6
8. Other Information	6

Section 1. Purpose

Form I-914, Application for T Nonimmigrant

The purpose of the Form I-914 is to provide temporary immigration benefits to aliens who are victims of severe forms of trafficking in persons, and to their immediate family members, as appropriate. Form I-914 shall be filed initially by the victims themselves, who may also include eligible family members on their application at that time. The form may also be filed to petition for eligible family members whom the victim did not include in the original application, but for whom the victim subsequently wishes to file.

Form I-914, Supplement A, Application for Immediate Family Member of T-1 Recipient

The purpose of the Form I-914, Supplement A, is to allow principal T nonimmigrant status holders and applicants to apply for derivative benefits for their immediate family members. The Principal Applicant shall complete and file one Form I-914, Supplement A, for each family member for whom the Principal Applicant is now seeking derivative status.

An alien granted **T-2, T-3,** or **T-4** nonimmigrant status may apply for employment authorization by filing an Application for Employment Authorization (Form I-765), with the appropriate fee or an application for fee waiver.

The Form I-765 may be filed concurrently with the filing of the application for **T-2, T-3,** or **T-4** status, or at any time thereafter.

If employment authorization is approved, the **T-2, T-3,** or **T-4** alien will be given an eligibility classification of **C25** in accordance with section 274a.12(c)(25). Employment authorization will last for the length of the duration of the T nonimmigrant status (3 years maximum).

The validity period of the initial EAD will be for twelve (12) months. Extensions may be granted in twelve-month increments, up to the expiration date of the T nonimmigrant status (3 years maximum).

Note: An Employment Authorization Document (EAD) cannot be issued to an alien (derivative family member) that is presently residing outside the United States. The principal alien will be notified of this fact.

Form I-914, Supplement B, Declaration of Law Enforcement Officer for Victim of Trafficking in Persons

The Form I-914, Supplement B, is used by Federal Law Enforcement Officers to certify that the applicant is a victim of a severe form of trafficking in persons.

Section 2. General Filing Instructions

As a result of situations leading to your filing of this application, you may not feel secure receiving correspondence regarding this application at the address where you live. The Safe Mailing Address may, but need not be, the mailing address for the place where you live. It may be a post office box, the address of a friend, a community based organization that is helping you, your attorney, or any other address at which you can receive correspondence safely and punctually.

How to File

Form I-914

In addition to the Form I-914 application and the requisite evidence in support of the applicant's claim, as described in Section 3 below, a complete application package shall include the filing fee and three identical photographs of the applicant.

The photographs must have been taken within six months of filing the application, and be unmounted and unretouched. The photographs shall be three-quarter views of the right side of the applicant's face, showing the applicant's entire face, including the right ear and left eye. The photographs shall be 1 1/2 X 1 1/2 inches. The applicant's head shall not make up less than 3/4 of the photographs. The background must be consistent and light in color. The applicant's name and A#, if known, shall be lightly printed on the back of each photograph with a pencil.

A principal or derivative applicant who is or becomes inadmissible under section 212(a) of the Immigration and Nationality Act (the Act) will not be eligible for T nonimmigrant status unless the ground of inadmissibility is waived by the Service. If the ground of inadmissibility is one that can be waived, the alien should apply for a waiver of the grounds of inadmissibility from the Service on Form I-192, Application for Advance Permission to Enter as Nonimmigrant (Pursuant to Section 212(d)(3) of the Immigration and Nationality Act). Section 212(d)(3)(B) provides general authority for the Service to waive many grounds of inadmissibility for nonimmigrants. These waivers are not automatic, but may be granted in the exercise of discretion. Form I-192 should be filed at the time of filing Form I-914.

Form I-914, Supplement A

If, in addition to the Form I-914, the applicant also files one or more Forms I-914, Supplement A, Application for Immediate Family Member of T-1 Recipient, each must be accompanied by all of the appropriate documentation and evidence, the appropriate fees, and three photographs of the Derivative Applicant. The photographs of the derivative must comply with the same requirements as the photographs of the Principal Applicant, described above. If you are requesting employment authorization for the Derivative Applicant, a Form I-765, Application for Employment Authorization, must also accompany the Form I-914, Supplement A.

A Form I-914, Supplement A, Application for Immediate Family Member of T-1 Recipient, may be filed concurrently with the initial application of the Principal Applicant, or at any time thereafter. Any Form I-914, Supplement A, submitted subsequently to the Principal Applicant's initial filing, however, must be accompanied by a new Form I-914 with the appropriate boxes checked in Part A, and **original signature**, with the appropriate fee. Evidence supporting the original application, however, is not required to be resubmitted with the new Form I-914. No Form I-914, Supplement A, will be accepted without a copy of the original Form I-914.

Fingerprinting and Interview Appointments

All applicants between the ages of 14 and 79 inclusive must be fingerprinted to facilitate a criminal background check. In addition, the Immigration and Naturalization Service (Service) may require the applicant to appear for a personal interview. The applicant will be notified of the proper time and location to appear for an interview, if the Service so requires, and for fingerprinting. Failure to appear for a scheduled interview without prior authorization, or failure to comply with fingerprint processing requirements, may result in denial of the application.

Section 3. Required Documentation for Each Application

Evidence

Form I-914

Application must be filed with evidence sufficient to demonstrate that each of the eligibility requirements is satisfied.

Principal Applicant for T Nonimmigrant (T-1) Status:

To qualify for T-1 nonimmigrant status, an applicant must demonstrate that he or she:

- Is physically present in the United States, American Samoa or the Commonwealth of the Northern Mariana Islands as a result of trafficking;
- Is a victim of a severe form of trafficking in persons;
- Would suffer extreme hardship involving unusual and severe harm upon removal; and
- Has complied with any reasonable request for assistance in the investigation and prosecution of acts of trafficking in persons, unless the applicant is less than 15 years old.

To establish that he or she is a victim of a severe form of trafficking in persons, the applicant must demonstrate that he or she was brought to the United States either:

(1) For the purpose of a commercial sex act, which act was either induced by force, fraud or coercion, or occurred when the applicant had not reached 18 years of age, or

(2) For the purpose of labor or services induced by force, fraud, or coercion for the purpose of subjecting the applicant to involuntary servitude, peonage, debt bondage, or slavery.

An applicant is encouraged to raise all arguments and to document all elements of his or her claim, including allegations of extreme hardship, in his or her initial application.

Form I-914, Supplement A

The Form I-914, Supplement A, must be filed with evidence sufficient to demonstrate that each of the eligibility requirements is satisfied.

Qualifications for T Derivative Applicants for Nonimmigrant Status

An applicant for T derivative status must be:

- The spouse or child of the T nonimmigrant principal applicant or the T nonimmigrant status holder, if the principal applicant or status holder is over the age of 21;

- The spouse, child or parent, if the principal applicant or status holder is under the age of 21.

Applicants for derivative status, as family members of an applicant for T-1 nonimmigrant status, or of a person granted T-1 nonimmigrant status, must submit credible documentary evidence of the relationship of the Derivative Applicant to the Principal Applicant. Documents that will be considered for this purpose are described below. If the Principal Applicant is over the age of 21, the Derivative Applicant must be the spouse or child of the Principal Applicant. If the Principal Applicant is under the age of 21, the Derivative Applicant may be the spouse, child, or parent of the Principal Applicant. If the Derivative Applicant is applying as the child of the Principal Applicant, the evidence must also establish that the Derivative Applicant is under the age of 21.

In addition, applicants for derivative status must submit evidence to demonstrate that either the principal or the Derivative Applicant will suffer extreme hardship if the Derivative Applicant is not permitted to join the Principal Applicant. An applicant is encouraged to raise all arguments and to document all elements of his or her claim, including allegations of extreme hardship, in his or her initial application.

Form I-914, Supplement B (Declaration of Law Enforcement Officer for Victim of Trafficking in Persons)

The primary evidence of an applicant's claim to be a victim of trafficking shall be a Form I-914, Supplement B, Declaration of Law Enforcement Officer for Victim of Trafficking in Persons. That certification is appended to this form. An applicant for T-1 nonimmigrant status need not necessarily file a Form I-914, Supplement B, to prove the claim. However, the endorsement of a Federal Law Enforcement Officer on the Form I-914, Supplement B, constitutes presumptive proof that the applicant is a victim and has complied with any reasonable request for assistance in the investigation and prosecution. These elements of the applicant's claim may be difficult to establish otherwise, and submission of the Form I-914, Supplement B, is strongly advised. Instructions pertinent to the Form I-914, Supplement B, follow.

If you do not provide a completed Form I-914, Supplement B, however, you must submit an explanation, describing your attempts to obtain the certification and why your request was refused. If you did not attempt to obtain the certification, you must explain why you did not.

Secondary Evidence

If you do not provide a completed Form I-914, Supplement B, Declaration of Law Enforcement Officer for Victim of Trafficking in Persons, in addition to the explanation described above, you must also submit credible secondary evidence to establish your eligibility. Such evidence may include, but is not limited to, police reports, newspaper articles, witness affidavits, or any other form of evidence. Even if you do provide a Form I-914, Supplement B, you may submit additional evidence.

Whether or not you provide a Form I-914, Supplement B, you must provide a personal narrative statement. That statement should describe the trafficking crime of which you were a victim, including:

- How you were induced to enter the United States;
- The purpose for which you were brought to the United States;
- When these events took place;
- Who was responsible;
- How long were you detained by the traffickers;
- How and when you escaped, were rescued, or otherwise became separated from the traffickers;
- What you have been doing since you were separated from the traffickers;
- Why you were unable to leave the United States after you were separated from the traffickers;
- What harm or mistreatment you fear if you are removed from the United States; and
- Why you fear you would be harmed or mistreated.

Attach documents to support your claim. The evidence submitted in support of the application must credibly establish each element of your claim. If you have in your possession, or have access to, a document showing how you entered the United States, you must submit a copy of that document with your application.

Section 4. Completing Each Application

Form I-914

Provide the specific information requested about you and your family. Answer ALL of the questions asked. If any question does not apply to you or you do not know the answer, reply "none," "N/A" (for not applicable), or "unknown," as appropriate. Provide detailed information. Answer the questions as completely as possible. You are strongly encouraged to attach additional written statements and documents that support your claim.

Part A. Purpose for Filing the Application

As was explained above, this form shall be used both for the initial application of a victim of trafficking in persons, and to file subsequently for eligible family members. In this section, you are asked to describe, by checking one or more boxes, your purpose in filing this form.

Part B. General Information about the Applicant

Provide the requested information about yourself.

Part C. Details Related to Nonimmigrant Status

The applicant must answer each question. The Principal Applicant must provide evidence to document that he or she:

(1) Is a victim of a severe form of trafficking in persons;

(2) Is present in the United States, American Samoa, or the Commonwealth of the Northern Mariana Islands, or at a port-of-entry thereto, on account of such trafficking;

(3) Has complied with any reasonable request for assistance in the investigation or prosecution of acts of trafficking (or is not yet 15 years old); and

(4) Would suffer extreme harship involving unusual and severe harm upon removal.

The applicant must explain each of those elements of the claim in detail, and provide evidence of each of those elements of the claim. The evidence must be attached to the application when it is submitted. Failure to demonstrate eligibility credibly will result in denial of the application.

Part D. Processing Information

Answer each of the questions. If you answer "Yes" to any of the questions, you must explain your answer on a separate piece of paper. Label that sheet Form I-914, Part D, reference the number of the question which requires explanation, and attach that sheet to your application. Answering "Yes" does not necessarily mean that your application will be denied.

Part E. Information about Your Family Members

Provide the requested information about each of your family members for whom you now wish to seek immigration benefits. You may also file for a family member at a later date, rather than on your initial application. You must file one Form I-914, Supplement A, Application for Immediate Family Member of T-1 Recipient, with this application for each family member for whom you are now applying.

Part F. Attestation and Release

By signing this form, you declare, under penalty of perjury, that the statements made on the application, and the evidence submitted with it, are true and correct.

By signing this form, you also agree that the Service may release information from the record in order to investigate your claim to determine your eligibility to investigate fraudulent claims, and to assist in the investigation of trafficking in persons and related crimes. The Service requires that you sign the attestation and release so that the Service may investigate your claim to eligibility.

Part G. Preparer and/or Translator Certification

If anyone assisted you in preparing this form, translated the questions to you, or translated your responses to the questions, they must sign this certification, declaring, under penalty of perjury, that they asisted you, and that, to the best of their knowledge, the information on the form is truthful.

Form I-914, Supplement A

Provide the specific information requested about you and your family. Answer ALL of the questions asked. If any question does not apply to you or you do not know the answer, reply "none," "N/A" (for not applicable), or "unknown," as appropriate. Provide detailed information. Answer the questions as completely as possible. You are strongly encouraged to attach additional written statements and documents that support your claim.

Part A. Relationship

State the relationship of the Derivative Applicant family member to you. You must also include documentation of the claimed relationship. Documents acceptable for this purpose are listed below.

If you are filing for your:

- **Husband or wife,** give the Service a copy of your marriage certificate.
- **Child, and you are the mother,** give the child's birth certificate showing your name and the name of your child.
- **Child, and you are the father or stepparent,** give the child's birth certificate, showing both parents' names, and your marriage certificate. Child born out of wedlock and you are the father, give proof that a parent/child relationship exists or existed. For example, the child's birth certificate showing your name and evidence that you have financially supported the child. (A blood test may be necessary.)

- **Mother,** give your birth certificate showing your name and the name of your mother.
- **Father,** give your birth certificate showing your names of both parents, and your parents' marriage certificate.
- **Stepparent,** give your birth certificate showing the name of both natural parents, and the marriage certificate of your parent to your stepparent.
- **Adoptive parent or adopoted child,** give a certified copy of the adoption decree, the legal custody decree if you obtained custody before adoption, and a statement showing the dates and places you have lived together with the adopted parent or child.

In addition, in any case in which a marriage license is required, if either the husband or wife was married before, you must submit documents to show that all previous marriages were legally ended (for example, a divorce decree or death certificate). In cases where the names shown on the supporting documents have changed, give the Service legal documents to show how the name change occurred (for example, a marriage certificate, adoption decree, court order, etc.).

If a required document is unavailable, you may give the Service the following instead. (The Service may require a statement from the appropriate civil authority certifying that the necessary document is unavailable.)

- **Church record:** A certificate under the seal of the church where the baptism, dedication, or comparable rite occurred within two months after birth, showing the date and place of child's birth, date of the religious ceremony, and the names of the child's parents.
- **School record:** A letter from the authorities of the school attended (preferably the first school), showing the date of admission to the school, child's date and place of birth, and the names and birthplaces of both parents, if shown in the school records.
- **Census record:** State or Federal census record showing the names, place of birth, and date of birth or age of the person listed.
- **Affidavits:** Written statements sworn to or affirmed by two persons who were living at the time and who have personal knowledge of the event you are trying to prove; for example, the date and place of birth, marriage, divorce, or death. The persons making the affidavits need not be citizens of the United States. Each affidavit should contain the following information: (1) the relationship, if any, of the affiant to you; (2) full information concerning the event; and (3) complete details concerning how the person acquired knowledge of the event.

Part B. Information about Primary Applicant

Provide the requested information about yourself.

Part C. Information about Derivative Applicant

Provide the requested information about the family member for whom you are applying. Answer each question fully. If necessary, attach additional sheets to completely address the question. Label those sheets "Form I-914, Supplement A, Part C." and reference the questions that require additional explanation.

Part D. Processing Information

Answer each of the questions. If you answer "Yes" to any of the questions, you must explain your answer on a separate sheet of paper. Label that sheet Form I-914, Supplement A, Part D, reference the number of the question that requires additional explanation, and attach the sheet to the application. Answering "Yes" does not necessarily mean that benefits will be denied.

Part E. Attestation and Release

By signing this application, you declare, under penalty of perjury, that the statements made on the application, and the evidence submitted with it, are true and correct. The derivative applicant must also sign, also under the penalty of perjury, if he or she is in the United States.

By signing this application, you also agree that the Service may release information from the record in order to investigate your claim, to determine your eligibility, to assist in the investigation and prosecution of trafficking and related crimes, and to investigate and prosecute false claims. The Service requires that you sign the attestation and release.

Part F. Preparer and/or Translator Certification

If anyone assisted you in preparing this application, translated the questions to you, or translated your responses to the questions, they must sign this certification, declaring, under penalty of perjury, that they assisted you, and that, to the best of their knowledge, that the information on the application is truthful.

Part G. Application Checklist

Please verify that you have complied with each item on this checklist. Be sure that you have complied with all Service requirements pertinent to this form. The Service is not obliged to return your form to you if it is incomplete, is unaccompanied by supporting evidence or the correct fee, or is otherwise

unacceptable. In addition, failure to answer any question on the form, or failure to comply with any other Service requirement, may result in a processing delay, or in denial of the application.

Section 5. Fee

Form I-914

The fee for this application is a base fee of $200, to a maximum amount of $400, plus:

- $50 for each immediate family member filed concurrently on the same application, to a maximum amount payable per application of $400.
- $25 fingerprint charge for each applicant between the ages of 14 and 79.

Pay the fee in the exact amount. Checks and money orders must be payable in U.S. currency. Make check or money order payable to "Immigration and Naturalization Service." If you live in Guam, make your check or money order payable to "Treasurer, Guam." If you live in the U.S. Virgin Islands, make your check or money order payable to "Commissioner of Finance of the Virgin Islands." A charge of $30 will be imposed if a check in payment of a fee is not honored by the bank on which it is drawn. Please do not send cash in the mail.

Section 6. Where to File

An applicant for status as a T nonimmigrant shall submit a complete application package, by mail, to the **USINS, Vermont Service Center, 75 Lower Weldon Street, St. Albans, VT 05479-0001.**

Section 7. Certification Instructions (Form I-914, Supplement B)

Form I-914, Supplement B, is to be completed by Federal Law Enforcement Officers for victims under the Victims of Trafficking and Violence Protection Act, Public Law 106-386. The law enforcement officer must complete the form based upon his or her knowledge of the case, including evidence developed by other law enforcement officers investigating the case.

In order to be granted immigration benefits, the applicant must demonstrate that he or she is present in the United States as a result of being a victim of a severe form of trafficking in persons. Unless the applicant is less than 15 years of age, the applicant must also demonstrate that he or she is cooperating with law enforcement in the investigation and prosecution of the trafficking crime of which he or she was a victim. These elements may be established without submitting a Form I-914, Supplement B, but submission of the Supplement B, is strongly advised.

The Form I-914 applicant may detach Form I-914, Supplement B, and submit it to a Federal law enforcement officer familiar with the case in which he or she was a victim of a severe form of trafficking in persons. After the officer has completed the form, submit it with your application package.

Section 8. Other Information

Confidentiality

Information provided in the application package is confidential. It will be used to determine eligibility, to investigate the fraudulent claims, to enforce penalties for false statements, to assist in the investigation and prosecution of trafficking and related crimes, but for no other purpose. The information provided is subject to verification by the Service. However, the Service will release the information only as necessary to the stated purposes.

Penalties for Perjury

All statements contained in response to questions in this application are declared to be true and correct under penalty of perjury. Title 18, United States Code, Section 1546, provides in part:

> . . . Whoever knowingly makes under oath, or as permitted under penalty of perjury under 1746 of Title 28, United States Code, knowingly subscribes as true, any false statement with respect to a material fact in any application, affidavit, or other document required by the immigration laws or regulations prescribed thereunder, or knowingly presents any such application, affidavit, or other document containing any such false statement shall be fined in accordance with this title or imprisoned not more than five years, or both.

The knowing placement of false information on this application may subject you and/or the preparer of this application to criminal penalties under Title 18 of the United States Code. The knowing placement of false information on this application may also subject you and/or the preparer to civil penalties under Section 274C of the Immigration and Nationality Act (INA), 8 U.S.C. 1324c. Under 8 U.S.C. 1324c, a person subject to a final order for civil document fraud is deportable from the United States and may be subject to fines.

Authority for Collecting this Information

The authority to require you to file Form I-914, Application for T Nonimmigrant Status, when applying for employment authorization is found in Public Law 106-386, Victims of Trafficking and Violence Protection Act. Information you provide on your Form I-914 is used to investigate the veracity of your claim. The information may form the basis for granting the benefit sought, or may form the basis for an investigation of a fraudulent claim. The information may also be provided to law enforcement agencies or prosecutors investigating or prosecuting crimes of trafficking or related crimes.

Failure to provide all information as requested may result in the denial or rejection of this application. The information you provide may also be disclosed to other federal, state, local and foreign law enforcement and regulatory agencies during the course of the INS investigations.

Paperwork Reduction Act

An agency may not conduct or sponsor an information collection and a person is not required to respond to a collection of information unless it displays a currently valid OMB control number. The Immigration and Naturalization Service (INS) tries to create forms and instructions which are accurate and easily understood. Often this is difficult because immigration law can be very complex. The public reporting burden for this form is estimated to average three (3) hours and twenty-five (25) minutes per response, including the time for reviewing instructions, gathering and maintaining the data needed, and completing and reviewing the collection of information. The INS welcomes your comments regarding this burden estimate or any other aspect of this form, including suggestions for reducing this burden to Immigration and Naturalization Service, HQPDI, 425 I Street, N.W., Room 4034, Washington, DC 20536; OMB No. 1115-0246. **DO NOT MAIL YOUR COMPLETED APPLICATION TO THIS ADDRESS.**

U.S. Department of Justice
Immigration and Naturalization Service

OMB No. 1115-0246; Expires 05/31/02

Application for T Nonimmigrant Status

START HERE - Please Type or Print. ***Use black ink. See Instructions for information about eligibility and how to complete and file this application.***

FOR INS USE ONLY

Bar Code

Date Stamp

Remarks

Bona Fide Application

Initials ____ Stamp # ____ Date ____

Conditional Approval

Initials ____ Stamp # ____ Date ____

Action Block

PART A. Purpose for Filing the Application

Check all that apply:

- ☐ I am filing an application for T-1 nonimmigrant status, and have not previously filed for such status.
- ☐ I have a T-1 application pending.
- ☐ I have received T-1 status.
- ☐ I am applying to bring family member(s) to the United States.

PART B. General Information About Applicant

Family Name	Given Name	Middle Name

Other Names Used *(If any)? (Include maiden name and aliases)*

Residence in the U.S. (Street Number and Name)	Apt. No.	Home Phone ( )
City	State	ZIP Code
SAFE Mailing Address in the U.S., if other than above.	Apt. No.	Daytime Phone ( )
City	State	ZIP Code

Sex ☐ Male ☐ Female

Marital Status ☐ Single ☐ Married ☐ Divorced ☐ Widowed

A# *(If any)*	Social Security # *(If any)*	Date of Birth *(MM/DD/YYYY)*
Country of Birth		Country of Citizenship
Passport #	Issue Date *(MM/DD/YYYY)*	Place of Issuance
I-94 #		Date of Last Entry into U.S.
Place of Last Entry into U.S.		Current INS Status

PART C. Details Related to T Nonimmigrant Status

When answering the following questions about your claim you should explain relevant information. You should ***attach documents in support of your claim that you are a victim of a severe form of trafficking in persons*** *and the specific facts on which you are relying to support your claim. If only applying for T derivative status subsequent to the Principal Applicant's initial filing, evidence supporting the original application is not required to be resubmitted with the new Form I-914. (Attach additional sheets of paper as needed, labeling them as Part C and the question number. Refer to Instructions for further information.) Check either Yes or No, as appropriate.*

1. I **am** a victim of a severe form of trafficking in persons. *(Attach evidence to support your claim.)* ☐ Yes ☐ No
2. I **am** submitting a Law Enforcement Agency (LEA) declaration on Form I-914, Supplement B, Declaration of Law Enforcement Officer for Victim of Trafficking in Persons. *(If No, explain why you are not submitting the LEA Certification.)* ☐ Yes ☐ No
3. I **am** physically present in the United States, American Samoa, or the Commonwealth of the Northern Mariana Islands, or at a port of entry, **on account of trafficking.** *(If Yes, explain in detail and attach evidence and documents supporting this claim.)* ☐ Yes ☐ No
4. I fear that I will suffer extreme hardship involving unusual and severe harm upon removal. *(If Yes, explain in detail and attach evidence and documents supporting this claim.)* ☐ Yes ☐ No

PART C. T Nonimmigrant Status *(Continued)*

5. I have reported the crime of which I am claiming to be a victim. *(If Yes, indicate to which law enforcement agency and office you have made the report, the address and phone number of that office, and the case number assigned, if any. If No, please explain the circumstances.)* ☐ Yes ☐ No

Law Enforcement Agency and Office	*Address*	*Phone No.*
		Case No.

6. I am under *the age of 15 years. (If Yes, proceed to question 8.)* ☐ Yes ☐ No

7. I have complied with requests from U.S. government authorities for assistance in the investigation or prosecution of acts of trafficking. *(If No, explain the circumstances. You may add additional pages if necessary, marking them Form I-914, Part C.7.)* ☐ Yes ☐ No

8. This is the first time I have entered the United States. *(If No, list each date, place of entry and under which status you entered the United States for the past 5 years.)* ☐ Yes ☐ No

Date of Entry	*Place of Entry*	*Status*

9. My most recent entry was on account of the trafficking that forms the basis for my claim. *(Explain the circumstances of your most recent arrival.)* ☐ Yes ☐ No

10. I **want** an Employment Authorization Document. ☐ Yes ☐ No

11. I **am** now applying for one or more eligible family members. *(If Yes, complete and include a Form I-914, Supplement A, Application for Immediate Family Member of T-1 Recipient, for each family member for whom you are now applying. You may also apply to bring eligible family members to the United States at a later date.)* ☐ Yes ☐ No

PART D. Processing Information

Please answer the following questions. *(If your answer is "Yes" to any one of these questions, explain on a separate piece of paper. Answering "Yes" does not necessarily mean that you are not entitled to adjust your status or register for permanent residence.)*

1. Have you ever, in or outside the U.S.:
   a. knowingly committed any crime of moral turpitude or a drug-related offense for which you have not been arrested? ☐ Yes ☐ No
   b. been arrested, cited, charged, indicted, fined or imprisoned for breaking or violating any law or ordinance, excluding traffic violations? ☐ Yes ☐ No
   c. been the beneficiary of a pardon, amnesty, rehabilitation decree, other act of clemency or similar action? ☐ Yes ☐ No
   d. exercised diplomatic immunity to avoid prosecution for a criminal offense in the U.S.? ☐ Yes ☐ No

2. Have you ever received public assistance in the U.S. from any source, including the U.S. government or any state, country, city or municipality (other than emergency medical treatment), or are you likely to receive public assistance in the future? ☐ Yes ☐ No

3. Have you ever:
   a. within the past ten years been a prostitute or procured anyone for prostitution, or intend to engage in any such activities in the future? ☐ Yes ☐ No
   b. engaged in any unlawful commercialized vice, including, but not limited to, illegal gambling? ☐ Yes ☐ No
   c. knowingly encouraged, induced, assisted, abetted or aided any alien to try to enter the U.S. illegally? ☐ Yes ☐ No
   d. illicitly trafficked in any controlled substance, firearms, or persons, or knowingly assisted, abetted or colluded in illegal trafficking? ☐ Yes ☐ No

PART D. Processing Information *(Continued)*

4. Have you ever engaged in, conspired to engage in, or do you intend to engage in, sabotage, kidnapping, political assassination, hijacking or any other form of terrorist activity? ☐ Yes ☐ No

5. Have you ever solicited membership or funds for, or have you through any means ever assisted or provided any type of material support to, any person or organization that has engaged or conspired to engage in sabotage, kidnapping, political assassination, hijacking or any other form of terrorist activity? ☐ Yes ☐ No

6. Do you intend to engage in the U.S. in:
   a. espionage? ☐ Yes ☐ No
   b. any activity a purpose of which is opposition to, or the control or overthrow of, the government of the United States, by force, violence or other unlawful means? ☐ Yes ☐ No
   c. any activity to violate or evade any law prohibiting the export from the United States of goods, technology or sensitive information? ☐ Yes ☐ No

7. Have you ever been a member of, or in any way affiliated with, the Communist Party or any other totalitarian party? ☐ Yes ☐ No

8. Did you, during the period from March 23, 1933 to May 8, 1945, in association with either the Nazi Government of Germany or any organization or government associated or allied with the Nazi Government of Germany, ever order, incite, assist or otherwise participate in the persecution of any person because of race, religion, national orgin or political opinion? ☐ Yes ☐ No

9. Have you ever engaged in genocide, or otherwise ordered, incited, assisted or otherwise participated in the killing of any person because of race, religion, nationality, ethnic origin or political opinion? ☐ Yes ☐ No

10. Have you ever been deported from the U.S., or removed from the U.S. at government expense, excluded within the past year, or are you now in exclusion or deportation proceedings? ☐ Yes ☐ No

11. Are you under a final order of civil penalty for violating section 274C of the Immigration and Nationality Act for use of fraudulent documents or have you, by fraud or willful misrepresentation of a material fact, ever sought to procure, or procured, a visa, other documentation, entry into the United States or any immigration benefit? ☐ Yes ☐ No

12. Have you ever left the United States to avoid being drafted into the United States Armed Forces? ☐ Yes ☐ No

13. Have you ever been a J nonimmigrant exchange visitor who was subject to the two-year foreign residence requirement and not yet complied with that requirement or obtained a waiver? ☐ Yes ☐ No

14. Are you now withholding custody of a U.S. citizen child outside the U.S. from a person granted custody of the child? ☐ Yes ☐ No

15. Do you plan to practice polygamy in the U.S.? ☐ Yes ☐ No

PART E. Information about Your Family Members

List information for each family member you are now applying to have join you in the United States.

Name	Family Relationship	Date of Birth *(MM/DD/YYYY)*	Current Location

Complete Form I-914, Supplement A, Application for Immediate Family Member of T-1 Recipient, for each eligible family member listed above and attach it to this application.

PART F. Attestation and Release

After reading the information regarding penalties in the instructions, complete and sign below. If someone helped you prepare this application, he or she must complete Part G.

I have read, or had read to me, this form, the information provided on it, and the evidence provided with it, and I certify, under penalty of perjury under the laws of the United States of America, that all of the information in this entire application package, including the documentary evidence submitted with it, is true and correct.

I authorize the release of any information from my record which the Immigration and Naturalization Service needs to determine eligibility for the benefit I am seeking, to investigate my claim, and to investigate fraudulent claims. I further authorize the Immigration and Naturalization Service to release information to law enforcement agencies and prosecutors investigating or prosecuting crimes of trafficking or related crimes.

Signature of Applicant *(The Person in Part A.)*

[_____] _____

(Sign your name within the brackets) Date *(Month/Day/Year)*

PART G. Preparer and/or Translator Certification

To be completed and signed if form is prepared by a person other than the applicant.

I attest, under penalty of perjury, that I have assisted in the completion of this form and that to the best of my knowledge the information is true and correct.

_____ _____

(Preparer's/Translator's Printed Name) *(Preparer's/Translator's Signature)*

Address _____ Phone Number _____

Date *(Month/Day/Year)* _____ Relationship to the Applicant _____

WARNING: **Applicants who are in the United States illegally are subject to removal if their claims are not granted. Any information provided in completing this application may be used as a basis for the institution of, or as evidence in, removal proceedings even if the application is later withdrawn.**

OMB No. 1115-0246; Expires 05/31/02

U.S. Department of Justice
Immigration and Naturalization Service

Application for Immediate Family Member of T-1 Recipient

START HERE - Please Type or Print. ***Use black ink. See Instructions for information about eligibility and how to complete and file this application.***

The recipient of the T nonimmigrant classification is referred to as the principal applicant. His/her family members are referred to as derivative applicants. The Form I-914, Supplement A, is to be completed by the principal applicant.

PART A. Relationship

The derivative applicant is my: *(Check one)* ☐ Husband/Wife ☐ Child ☐ Parent

PART B. Information about Principal Applicant

Family Name	Given Name	Middle Name	Date of Birth *(MM/DD/YYYY)*	A# *(If any)*

Principal applicant's application has been previously: *(Check One)* ☐ Submitted ☐ Granted Conditional Approval ☐ Found Bona Fide ☐ Approved for T Nonimmigrant Status

PART C. Information about Derivative Applicant

Family Name	Given Name	Middle Name	A # *(If any)*	Social Security # *(If any)*

Other Names Used *(If any)*? *(Include maiden name and aliases)*

Intended Residence in U.S. *(Street Number and Name)*	Apt. No.	City

State	ZIP Code	Home Phone	Daytime Phone
		( )	( )

Mailing Address in the U.S., if other than above.	Apt. No.	City	State	ZIP Code

Sex	Marital Status	Date of Birth *(MM/DD/YYYY)*
☐ Male ☐ Female	☐ Single ☐ Married ☐ Divorced ☐ Widowed	

Names of Prior Husband/Wives *(if any)* and Dates Marriages Ended

Country of Birth	Country of Citizenship	Passport #	Issue Date *(MM/DD/YYYY)*	Place of Issuance

Is the Derivative Applicant currently in the United States? ☐ Yes ☐ No *(If Yes, complete the following.) He or she last arrived as a (visitor, student, stowaway, without inspection, other, please specify.)*

Has the Derivative Applicant previously entered the United States? ☐ Yes ☐ No *(If Yes, list each previous entry during the past five years. Attach additional sheets, if necessary.)*

Date of Entry	*Place of Entry*	*Status*

Arrival/Departure Record (I-94) Number, Date arrived, and Date authorized stay expired, or will expire. *(As shown on Form I-94 or I-95)*

PART C. Information about Derivative Applicant ***(Continued)***

Has family member for whom you are applying ever been under immigration proceedings?

☐ Yes ☐ No If Yes, answer the following: Where: _____ When *(MM/DD/YYYY)*: _____

☐ Exclusion ☐ Deportation ☐ Recission ☐ Judicial Proceeding

List your family member's spouse and children. *(Attach additional sheets of paper, if necessary. If family member is your spouse, list only his or her children.)*

Name	*Relationship*	*Date of Birth (MM/DD/YYYY)*	*Country of Birth*

Are you applying for employment authorization for your family member? ☐ Yes ☐ No *(If Yes, submit a Form I-765, Application for Employment Authorization, for the family member.)*

PART D. Processing Information

Please answer the following questions. *(If your answer is "Yes" to any one of these questions, explain on a separate piece of paper. Answering "Yes" does not necessarily mean that your family member will be denied T nonimmigrant status.)*

1. Has the family member for whom you are applying ever:
   a. knowingly committed any crime of moral turpitude or a drug-related offense for which he or she have not been arrested? ☐ Yes ☐ No
   b. been arrested, cited, charged, indicted, fined or imprisoned for breaking or violating any law or ordinance, excluding traffic violations? ☐ Yes ☐ No
   c. been the beneficiary of a pardon, amnesty, rehabilitation decree, other act of clemency or similar action? ☐ Yes ☐ No
   d. exercised diplomatic immunity to avoid prosecution for a criminal offense in the U.S.? ☐ Yes ☐ No
2. Has the family member for whom you are applying ever received public assistance in the U.S. from any source, including the U.S. government or any state, country, city or municipality (other than emergency medical treatment), or is he or she likely to receive public assistance in the future? ☐ Yes ☐ No
3. Has the family member for whom you are applying:
   a. within the past ten years been a prostitute or procured anyone for prostitution, or does he or she intend to engage in any such activities in the future? ☐ Yes ☐ No
   b. engaged in any unlawful commercialized vice, including, but not limited to, illegal gambling? ☐ Yes ☐ No
   c. knowingly encouraged, induced, assisted, abetted or aided any alien to try to enter the U.S. illegally? ☐ Yes ☐ No
   d. illicitly trafficked in any controlled substance, firearms, or persons, or knowingly assisted, abetted or colluded in illegal trafficking? ☐ Yes ☐ No
4. Has the family member for whom you are applying ever engaged in, conspired to engage in, or does he or she intend to engage in, sabotage, kidnapping, political assassination, hijacking or any other form of terrorist activity? ☐ Yes ☐ No
5. Has the family member for whom you are applying ever solicited membership or funds for, or through any means ever assisted or provided any type of material support to, any person or organization that has engaged or conspired to engage in sabotage, kidnapping, political assassination, hijacking or any other form of terrorist activity? ☐ Yes ☐ No
6. Does the family member for whom you are applying intend to engage in the U.S. in:
   a. espionage? ☐ Yes ☐ No
   b. any activity a purpose of which is opposition to, or the control or overthrow of, the government of the United States, by force, violence or other unlawful means? ☐ Yes ☐ No
   c. any activity to violate or evade any law prohibiting the export from the United States of goods, technology or sensitive information? ☐ Yes ☐ No
7. Has the family member for whom you are applying ever been a member of, or in any way affiliated with, the Communist Party or any other totalitarian party? ☐ Yes ☐ No
8. Did the family member for whom you are applying, during the period from March 23, 1933 to May 8, 1945, in association with either the Nazi Government of Germany or any organization or government associated or allied with the Nazi Government of Germany, ever order, incite, assist or otherwise participate in the persecution of any person because of race, religion, national orgin or political opinion? ☐ Yes ☐ No

PART D. Processing Information *(Continued)*

9. Has the family member for whom you are applying ever engaged in genocide, or otherwise ordered, incited, assisted or otherwise participated in the killing of any person because of race, religion, nationality, ethnic origin or political opinion? ☐ Yes ☐ No

10. Has the family member for whom you are applying ever been deported from the U.S., or removed from the U.S. at government expense, excluded within the past year, or is he or she now in exclusion or deportation proceedings? ☐ Yes ☐ No

11. Is the family member for whom you are applying under a final order of civil penalty for violating section 274C of the Immigration and Nationality Act for use of fraudulent documents or has he or she, by fraud or willful misrepresentation of a material fact, ever sought to procure, or procured, a visa, other documentation, entry into the United States or any immigration benefit? ☐ Yes ☐ No

12. Has the family member for whom you are applying ever left the United States to avoid being drafted into the United States Armed Forces? ☐ Yes ☐ No

13. Has the family member for whom you are applying ever been a J nonimmigrant exchange visitor who was subject to the two-year foreign residence requirement and not yet complied with that requirement or obtained a waiver? ☐ Yes ☐ No

14. Is the family member for whom you are applying now withholding custody of a U.S. citizen child outside the U.S. from a person granted custody of the child? ☐ Yes ☐ No

15. Does the family member for whom you are applying plan to practice polygamy in the U.S.? ☐ Yes ☐ No

PART E. Attestation and Release

The Derivative Applicant, the family member for whom you are applying, must sign below if he or she is presently in the United States. If someone helped you prepare this supplementary application, he or she must complete Part F.

I have read, or had read to me, this form, the information provided on it, and the evidence provided with it, and certify, under penalty of perjury under the laws of the United States of America, that the information on this supplementary application and the evidence submitted with it are true and correct.

I authorize the release of any information from the record which the Immigration and Naturalization Service needs to determine eligibility for the benefit I am seeking for the family member for whom I am applying, to investigate my claim, and to investigate fraudulent claims. I further authorize the Immigration and Naturalization Service to release information to law enforcement agencies and prosecutors investigating or prosecuting crimes of trafficking or related crimes.

[_____] _____

Signature of Derivative Applicant *(The family member for whom you are applying.)* Date *(Month/Day/Year)*

[_____] _____

Signature of Principal *(Sign your name within the brackets)* Date *(Month/Day/Year)*

PART F. Preparer and/or Translator Certification

To be completed and signed if form is prepared by a person other than the applicant.

I attest, under penalty of perjury, that I have assisted in the completion of this form and that to the best of my knowledge the information is true and correct.

_____ _____

(Preparer's/Translator's Printed Name) (Preparer's/Translator's Signature)

Address _____ Phone Number _____

Date *(Month/Day/Year)* _____ Relationship to the Applicant _____

WARNING: **Applicants who are in the United States illegally are subject to removal if their claims are not granted. Any information provided in completing this application may be used as a basis for the institution of, or as evidence in, removal proceedings even if the application is later withdrawn.**

PART G. Checklist

☐ I completely filled out and signed the form.

☐ I have attached evidence that:

- I am a victim of a severe form of trafficking;
- I am physically present in the United States on account of trafficking;
- I am cooperating with the government in the investigation/prosecution of the traffickers (unless under age 15); and
- I would suffer extreme hardship involving unusual and severe harm upon removal from the United States.

☐ I have included three photographs of myself.

☐ I have attached a check or money order for the required fees.

The required fees include:

- the fee for filing this application;
- the fingerprinting fee for the applicant, if the applicant is between the ages of 14 and 79 inclusive, and
- if the applicant is also currently filing for family members, the appliant is responsible for additional charges, as detailed in the instructions to Form I-914, Supplement A.

If I am applying for one or more family members:

☐ I have completed a Form I-914, Supplement A for each member for whom I am now applying and, if he or she is in the United States, each family member has signed that Form I-914, Supplement A.

☐ I have submitted the required evidence, including evidence of:

- my relationship to the family member for whom I am applying;
- my age, if I am applying for my parent;
- my child's age, if I am applying for my child; and
- the extreme hardship that either I or my family member will suffer, if my family member is not permitted to join me in the United States.

☐ I have included three photographs of each family member for whom I am now applying.

☐ I have included a Form I-765 Application for Employment Authorization, if I am requesting employment authorization for my family member.

☐ I have attached a check or money order for the required fees.

The required fees include:

- the fee for filing this supplementary application;
- the fingerprinting fee for the applicant, if the applicant is between 14 and 79; and
- the filing fee for Form I-765, Application for Employment Authorization, if the family member is requesting employment authorization.

NOTE: ***The required fees are posted at the INS website, at*** **http://www.ins.usdoj.gov,** ***and are also available from the INS National Customer Service Center, at 1-800-375-5283.***

OMB No. 1115-0246; Expires 05/31/02

U.S. Department of Justice
Immigration and Naturalization Service

Declaration of Law Enforcement Officer for Victim of Trafficking in Persons

Instructions to Certifying Officer: This applicant is applying for immigration benefits based upon a claim of having been a victim of a severe form of trafficking in persons. Please complete the form below based upon your knowledge of the case, including evidence developed by other law enforcement officers investigating the case.

In order to be granted immigration benefits, the applicant must demonstrate that he or she is present in the United States as a result of being a victim of a severe form of trafficking in persons. Unless the applicant is less than 15 years old, the applicant must also demonstrate that he or she is cooperating with law enforcement in the investigation and prosecution of the trafficking crime of which he or she was a victim.

To be completed by Federal Law Enforcement Officers for victims under the Victims of Trafficking and Violence Protection Act, Public Law 106-386.

PART A. General Information

Name of Government Agency: ☐ Immigration and Naturalization Service, DOJ ☐ Civil Rights Division, DOJ	☐ U.S. Marshall's Service, DOJ ☐ Federal Bureau of Investigation, DOJ ☐ Criminal Division, DOJ	☐ U.S. Attorney's Office ☐ Dept. of State Diplomatic Security ☐ Other _____	Date
Address of Agency/Official		Name and Title of Certifying Officer or Official	
City	State	ZIP Code	Phone No. ( )	Fax No. ( )
Victim's Name	Other Names Used	Sex ☐ Male ☐ Female	Date of Birth *(MM/DD/YYYY)*
Date of Crime	Charges		Case No.
Date Initiated *(MM/DD/YYYY)*	Case Status ☐ On-going ☐ Completed ☐ N/A	Date Completed *(MM/DD/YYYY)*	FBI Identification No., *if any*

PART B. Statement of Claim

1. The applicant is a victim of a severe form of trafficking in persons. Specifically, he or she is a victim of: *(Please check all that apply.)*

   ☐ Sex trafficking in which a commercial sex act was induced by force, fraud or coercion. Sex trafficking means the recruitment, harboring, transportation, provision, or obtaining of a person for the purpose of a commercial sex act.

   ☐ Sex trafficking and the victim is under the age of 18.

   ☐ The recruitment, harboring, transportation, provision, or obtaining of a person for labor or services through the use of force, fraud or coercion for the purpose of subjection to involuntary servitude, peonage, debt bondage, or slavery.

   ☐ Not applicable.

   ☐ Other, please specify on attached additional sheets.

2. Please describe the victimization upon which the applicant's claim is based and identify the relationship between that victimization and the crime under investigation/prosecution. Attach the results of any name or database inquiry performed in the investigation of the case. Please include relevant dates, etc. Has the applicant expressed any fear of retaliation or revenge if removed from the United States? Explain. Attach additional sheets, if necessary.

PART C. Cooperation of Victim *(Attach additional sheets, if necessary.)*

The applicant:

- ☐ Has complied with requests for assistance in the investigation/prosecution of the crime of trafficking. *(Explain below.)*
- ☐ Has failed to comply with requests to assist in the investigation/prosecution of the crime of trafficking. *(Explain below.)*
- ☐ Has not been requested to assist in the investigation/prosecution of any crime of trafficking.
- ☐ Has not yet attained the age of 15.
- ☐ Other, please specify on attached additional sheets.

PART D. Family Members

☐ Yes ☐ No Are any of the applicant's relatives believed to have been involved in his or her trafficking to the United States? If Yes, list the relatives and describe that relative's involvement in the applicant's trafficking.

PART E. Attestation

Based upon investigation of the facts, I certify, under penalty of perjury, that the above noted individual is or has been a victim of a severe form of trafficking in persons as defined by the VTVPA. I certify that the above information is true and correct to the best of my knowledge, and that I have made, and will make, no promises regarding the above victim's ability to obtain a visa from the Immigration and Naturalization Service, based upon this certification.

[_____]
(Signature of Law Enforcement Officer identified in Box A above)

_____
Date *(Month/Day/Year)*

[_____]
(Signature of Supervisor of Certifying Officer)

_____
(Printed Name of Supervisor)

_____
Date *(Month/Day/Year)*

[FR Doc. 02–2186 Filed 1–30–02; 8:45 am]
BILLING CODE 4410–10–C

Federal Register

Thursday,
January 31, 2002

Part II

Department of Justice

Immigration and Naturalization Service

8 CFR Part 103, et al.

New Classification for Victims of Severe Forms of Trafficking in Persons; Eligibility for "T" Nonimmigrant Status; Final Rule

DEPARTMENT OF JUSTICE

Immigration and Naturalization Service

8 CFR Parts 103, 212, 214, 274a and 299

INS No. 2132–01; AG Order No. 2554–2002

RIN 1115–AG19

New Classification for Victims of Severe Forms of Trafficking in Persons; Eligibility for ''T'' Nonimmigrant Status

AGENCY: Immigration and Naturalization Service, Department of Justice.

ACTION: Interim rule with request for comments.

SUMMARY: This rule is intended to assist all concerned Federal officials, including, but not limited to, officials of the Immigration and Naturalization Service (Service), and eligible applicants, in implementing provisions of section 107(e) of the Trafficking Victims Protection Act of 2000 (TVPA). The T nonimmigrant status is available to eligible victims of severe forms of trafficking in persons who have complied with any reasonable request for assistance in the investigation or prosecution of acts of trafficking in persons, and who can demonstrate that they would suffer extreme hardship involving unusual and severe harm if they were removed from the United States. This rule addresses: the essential elements that must be demonstrated for classification as a T nonimmigrant alien; the procedures to be followed by applicants to apply for T nonimmigrant status; and evidentiary guidance to assist in the application process. The Service will promulgate separate regulations concerning the process for adjusting from T nonimmigrant status to lawful permanent resident status.

DATES: *Effective date*: This interim rule is effective March 4, 2002.

Comment date: Written comments must be submitted on or before April 1, 2002.

ADDRESSES: Please submit written comments to the Immigration and Naturalization Service, Policy Directive and Instructions Branch, Attention: TVPA Implementation Team, 425 I Street, NW., Room 4034, Washington, DC 20536 by mail or email your comments to the VTVPA Implementation Team at *insregs@usdoj.gov.* When submitting comments electronically, please include ''INS No. 2132–01'' in the subject box.

To ensure proper handling, please reference INS No. 2132–01 on your correspondence or e-mail. Comments will be available for public inspection at the above address by calling (202) 514–3048 to arrange for an appointment.

FOR FURTHER INFORMATION CONTACT: Anne Veysey, Office of Programs, Immigration and Naturalization Service, 425 I Street, NW., Room 1000, Washington, DC 20536, telephone: (202) 514–3479.

SUPPLEMENTARY INFORMATION:

Background and Legislative Authority

The Victims of Trafficking and Violence Protection Act of 2000 (VTVPA), Pub. L. 106–386, was signed into law on October 28, 2000. The VTVPA is divided into three sections: Division A, the Trafficking Victims Protection Act (TVPA); Division B, the Violence Against Women Act of 2000 (VAWA); and Division C, Miscellaneous Provisions. In passing this legislation, Congress intended to create a broad range of tools necessary for the Federal government to address the particular concerns associated with the problem of trafficking in persons.

In the TVPA, Congress found that ''(a)t least 700,000 persons annually, primarily women and children, are trafficked within or across international borders. Approximately 50,000 women and children are trafficked into the United States each year.'' Section 102(b)(1), TVPA. Congress further found that ''(t)raffickers often transport victims from their home communities to unfamiliar destinations, including foreign countries away from family and friends, religious institutions, and other sources of protection and support(.)'' *Id.* at section 102(b)(5). In trafficking in persons situations, perpetrators often target individuals who are likely to be particularly vulnerable and unfamiliar with their surroundings. Congress's intentions in passing the TVPA were to further the humanitarian interests of the United States and to strengthen the ability of government officials to investigate and prosecute trafficking in persons crimes by providing temporary immigration benefits to victims.

In the TVPA, Congress provided a variety of means to combat trafficking in persons by ensuring just and effective punishment of traffickers and by protecting the victims of trafficking in persons. These means include providing immigration benefits to eligible aliens who have been victims of severe forms of trafficking in persons and, in the case of persons aged 15 and older, who comply with any reasonable request to assist law enforcement agencies in the investigation and prosecution of their traffickers. The TVPA addresses the effect of severe forms of trafficking in persons on victims, including many who may not have legal status and are reluctant to cooperate.

In order to develop a comprehensive Federal approach to identifying victims of severe forms of trafficking in persons, to provide them with benefits and services, and to enhance the Department of Justice's ability to prosecute traffickers and prevent trafficking in persons in the first place, the Service conducted a series of stakeholders' meetings with representatives from key Federal agencies; national, state, and local law enforcement associations; non-profit, community-based victim rights organizations; and other groups. Suggestions from these stakeholders were used in the drafting of this regulation. Additionally, the Department established an internal working group to oversee implementation of the new law.

In a variety of ways, the Department has attempted to protect potential victims of severe forms of trafficking in persons by encouraging witnesses to cooperate in the investigation and prosecution of traffickers. Through vigorous investigation and prosecution of severe forms of trafficking in persons, the Department hopes to dismantle trafficking in persons rings and dramatically reduce the number of trafficking victims.

The U.S. Government has already taken a number of actions to implement section 107 of the TVPA. A key initial response under the TVPA was to improve the ability of law enforcement agencies to identify victims of severe forms of trafficking in persons and to provide appropriate information and assistance to them pursuant to section 107(c) of the TVPA. The Attorney General and the Secretary of State already have issued regulations implementing the requirements for assistance to victims of severe forms of trafficking in persons under section 107(c). See 66 FR 38514 (July 24, 2001) (codified at 28 CFR part 1100).

Section 107(c) permits the Service, in cooperation with other law enforcement agencies, to arrange for the ''continued presence'' of aliens who have been the victims of severe forms of trafficking in persons and are potential witnesses to that trafficking, so that they will be available to assist with the investigation and prosecution of the traffickers. As provided in 28 CFR 1100.35, the Service will arrange for ''continued presence'' of such victims, at the request of appropriate law enforcement agencies, during the time that their presence in the United States is needed for law enforcement purposes. In most of those cases, the Service (whether through

parole or other means) will be able to grant the victims temporary work authorization during the time they remain in the United States to assist with these law enforcement efforts.

Section 107(b) of the TVPA also provides that aliens who are victims of severe forms of trafficking in persons who have been granted continued presence, or who have filed a *bona fide* application for T nonimmigrant status, also are eligible to receive certain kinds of public assistance to the same extent as refugees.

Finally, in another part of the same Act that enacted the provisions of the TVPA for victims of trafficking in persons, Congress also provided for a new U nonimmigrant status for victims of certain kinds of crimes, including crimes involving trafficking in persons. VAWA section 1513. The Department will be publishing regulations to implement the U nonimmigrant status in a separate rulemaking action.

T Nonimmigrant Status

This rule implements one aspect of these new protections for victims of severe forms of trafficking in persons, the T nonimmigrant status. Congress established this new classification, in section 107(e) of the TVPA, to create a safe haven for certain eligible victims of severe forms of trafficking in persons who are assisting law enforcement authorities in investigating and prosecuting the perpetrators of these crimes. Children who have not yet attained the age of 15 at the time of application are exempt from the requirement to comply with law enforcement requests for assistance in order to establish eligibility.

T nonimmigrant status is applicable to victims of severe forms of trafficking in persons who are physically present in the United States, American Samoa, or the Commonwealth of the Northern Mariana Islands, or at a port-of-entry thereto, on account of such trafficking in persons. Applicants for this status must demonstrate that they would suffer extreme hardship involving unusual and severe harm if they were removed from the United States and that they have complied with any reasonable request for assistance in the investigation or prosecution of acts of trafficking in persons.

Principal aliens eligible for T nonimmigrant status may be granted T–1 status, which the TVPA limits to no more than 5,000 each fiscal year. In some circumstances, immediate family members of victims of severe forms of trafficking in persons also may receive a T nonimmigrant visa to accompany or to join the victim. When the Service approves a T nonimmigrant status application, it will provide a list of nongovernmental organizations to which the alien can refer regarding the alien's options while in the United States and resources available to the alien.

T nonimmigrant status allows eligible aliens to remain in the United States and grants specific nonimmigrant benefits. The T status is separate and distinct from the provision for ''continued presence'' pursuant to 28 CFR 1100.35, which is only temporary and requires that the alien depart the United States once his or her presence for purposes of the criminal investigation or prosecution is no longer required, unless the alien has some other immigration status. Those acquiring T–1 nonimmigrant status will be able to remain in the United States for a period of three years, whether or not they were granted ''continued presence.''

Unlike other provisions of section 107 of the TVPA, T–1 nonimmigrant status is limited to victims of severe forms of trafficking in persons who are physically present on account of the trafficking and can establish that they would suffer ''extreme hardship involving unusual and severe harm'' if they were removed from the United States. In view of the annual limitation imposed by Congress for T–1 status, and the standard of extreme hardship involving unusual and severe harm, the Service acknowledges that the T–1 status will not be an appropriate response with respect to many cases involving aliens who are victims of severe forms of trafficking in persons.

To best meet these goals, the Service has determined that applicants may apply individually for T–1 nonimmigrant status without requiring third party sponsorship from a law enforcement agency, as is the case for the existing S nonimmigrant status for alien witnesses and informants. See 8 CFR 214.2(t). Recognizing the importance of providing assistance to law enforcement investigations and prosecutions, however, this interim rule provides a standard form for law enforcement agencies to use to provide sufficient background information to document that the alien is a victim of a severe form of trafficking in persons and has cooperated with reasonable requests for assistance to law enforcement. Although a law enforcement endorsement will not be required, and an alien will be able to submit secondary evidence to establish these statutory requirements, the submission of this endorsement form will serve as primary evidence to satisfy these two elements and is strongly encouraged.

Aliens who have been granted T–1 status also will be able to seek derivative T status for their immediate family members who are accompanying or following to join them, if they can demonstrate that the removal of those family members from the United States (or the failure to admit the family members to the United States if they are currently abroad) would result in extreme hardship. Eligible immediate family members of the T–1 principal may receive derivative T–2 (spouse) or T–3 (child) status, and, in the case of a T–1 principal alien under the age of 21, T–4 (parent) status. The statutory numerical limitations do not apply to immediate family members classified as T nonimmigrant aliens. The Service notes that such immediate family members also may qualify for protection in appropriate cases under the regulations adopted to implement section 107(c) of the TVPA. See 28 CFR 1100.31.

Eligible victims who are granted T–1 nonimmigrant status will be issued employment authorization to assist them in finding safe, legal employment while they attempt to retake control of their lives. Aliens with derivative T–2, T–3, or T–4 status also may apply for employment authorization.

The TVPA also provides for the adjustment of status, at the Attorney General's discretion, from T nonimmigrant status to lawful permanent resident status for T nonimmigrants who: (1) Are admissible; (2) have been physically present in the United States for a continuous period of at least 3 years since the date of admission with T–1 nonimmigrant status; (3) throughout such period have been persons of good moral character; and (4) establish either (i) that during such period they have complied with any reasonable request for assistance in the investigation or prosecution of acts of trafficking in persons, or (ii) that they would suffer extreme hardship involving unusual and severe harm upon removal from the United States. The provisions concerning adjustment of status will be the subject of a separate rulemaking.

The Interim Rule

To qualify for T–1 nonimmigrant status, a person must demonstrate: (1) That he or she is a victim of a severe form of trafficking in persons; (2) that he or she is physically present in the United States, American Samoa, or the Commonwealth of the Northern Mariana Islands, or at a port of entry thereto, on account of such trafficking in persons;

(3) that, if 15 years of age or older, he or she has complied with any reasonable request for assistance in the investigation or prosecution of acts of trafficking in persons; and (4) that he or she would suffer extreme hardship involving unusual and severe harm if removed from the United States. The alien also must be admissible to the United States or obtain a waiver of inadmissibility from the Service. This rule addresses what the alien must show to meet each element necessary to qualify for the T nonimmigrant classification. The Service has created a new Form I–914, *Application for the T Nonimmigrant Status,* for this purpose. Form I–914 is composed of three sections: *Application for the T Nonimmigrant Status* (required); Supplement A, *Application for Immediate Family Member of T–1 Recipient;* and Supplement B, *Declaration of a Law Enforcement Officer for Victim of Trafficking in Persons.*

How Is a Victim of a Severe Form of Trafficking in Persons Defined?

Section 103 of the TVPA defines the term ''victim of a severe form of trafficking in persons.'' To be a ''victim of a severe form of trafficking in persons,'' an individual must

- Have been recruited, harbored, transported, provided, or obtained for labor or services, or the purposes of a commercial sex act; and
- There must have been some force, fraud, or coercion involved to make the victim engage in the labor or services or the commercial sex act (except that there need not be any force, fraud, or coercion in cases of commercial sex acts where the victim is under 18); and
- For situations involving labor or services, the use of force, fraud, or coercion must be for the purpose of subjecting the victim to involuntary servitude, peonage, debt bondage, or slavery.

This legislation provided the first definition under Federal law of a victim of a severe form of trafficking in persons. It builds upon the Constitutional prohibition on slavery, the existing criminal law provisions on slavery and peonage (Chapter 77 of title 18, U.S. Code, sections 1581 *et seq.*), on the case law interpreting the Constitution and these statutes (specifically *United States* v. *Kozminski,* 487 U.S. 931, 952 (1988)), and on the new criminal law prohibitions contained in the TVPA.

In order to make potential applicants for T–1 nonimmigrant status aware of the types of violations that must exist in order to meet the statutory definition of severe forms of trafficking in persons, the Service makes reference to the text of the 12 Federal criminal civil rights statutes contained within Chapter 77 of title 18 of the U.S. Code, beginning with section 1581. This set of statutes contains both preexisting and newly created trafficking in persons laws, many of which appear to constitute the crimes that Congress intended to cover in its statutory definition of severe forms of trafficking in persons. Accordingly, the definitions contained in section 214.11 reference the scope of those criminal provisions as an appropriate guide in applying the definitions of ''severe forms of trafficking in persons'' and its related terms for purposes of the T nonimmigrant status.

The statutory definition of involuntary servitude reflects the new Federal crime of ''forced labor'' contained in section 103(5) of the TVPA, and expands the definition of involuntary servitude contained in *Kozminski.* In crafting the definition in the TVPA, Congress intended to broaden the types of criminal conduct that could be labeled ''involuntary servitude.''

The legislative history of the new ''forced labor'' crime (18 U.S.C. 1589) provides helpful guidance on what types of conduct Congress intended to cover in its statutory definitions of severe trafficking in persons and, in particular, involuntary servitude:

> ''Section 1589 is intended to address the increasingly subtle methods of traffickers who place their victims in modern-day slavery, such as where traffickers threaten harm to third persons, restrain their victims without physical violence or injury, or threaten dire consequences by means other than overt violence * * * Because provisions within section 1589 only require a showing of a threat of ''serious harm,'' or of a scheme, plan, or pattern intended to cause a person to believe that such harm would occur, federal prosecutors will not have to demonstrate physical harm or threats of force against victims. The term ''serious harm'' * * * refers to a broad array of harms, including both physical and nonphysical, and section 1589's terms and provisions are intended to be construed with respect to the individual circumstances of victims that are relevant in determining whether a particular type or certain degree of harm or coercion is sufficient to maintain or obtain a victim's labor or services, including the age and background of the victims.'' 146 Cong. Rec. H8881 (daily ed. Oct. 5, 2000).

The only term within the statutory definition in section 103 of the TVPA that is not covered by Chapter 77 of title 18, U.S. Code, is the term ''debt bondage.'' According to the TVPA, ''the term ''debt bondage'' means the status or condition of a debtor arising from a pledge by the debtor of his or her personal services or of those of a person under his or her control as a security for debt, if the value of those services as reasonably assessed is not applied toward the liquidation of the debt or the length and nature of those services are not respectively limited and defined.'' TVPA, section 103(4).

The Service also notes that the definitions in section 103 of the TVPA are applicable not only for purposes of the T nonimmigrant status, but also for many other purposes as well under the TVPA. For example, the same definitions of ''severe forms of trafficking in persons'' and its related terms are used for purposes of:

- The provisions of section 107(c) of the TVPA and in the implementing regulations on Protection and Assistance for Victims of Trafficking adopted by the Attorney General and the Secretary of State at 66 FR 38514 (July 24, 2001) (to be codified at 28 CFR part 1100);
- The provisions for eligibility for benefits and services under section 107(b) of the TVPA;
- The annual country reports on human rights practices prepared by the Department of State under the Foreign Assistance Act of 1961, as amended by section 104 of the TVPA; and
- The minimum standards for the elimination of severe forms of trafficking in persons and the provisions to promote compliance with those minimum standards, as provided in sections 108 through 111 of the TVPA.

In providing for the new T nonimmigrant status, Congress directed the Attorney General to apply the definition of a ''victim of a severe form of trafficking in persons'' as it is defined in section 103 of the TVPA. Section 103 of the TVPA provides a common definition of the key statutory terms that are used in several different contexts in Title I of the TVPA. In view of the common usage of these definitions in section 103 for many purposes under the TVPA, the Service will interpret and apply those terms for purposes of the T nonimmigrant status with due regard for the definitions and application of these terms in 28 CFR part 1100 and the provisions of chapter 77 of title 18, United States Code.

In determining whether an applicant is a victim of a severe form of trafficking in persons, the Service will consider all credible and relevant evidence. Except in instances of sex trafficking involving minors, severe forms of trafficking in persons must involve both a particular means (force, fraud, or coercion) and a particular end (sex trafficking,

involuntary servitude, peonage, debt bondage, or slavery). It is the applicant's burden to demonstrate both elements of a severe form of trafficking in persons. For example, an adult involved in commercial sexual activity that is not induced by force, fraud, or coercion will not be considered a victim of a severe form of trafficking in persons.

When Is an Alien Physically Present in the United States on Account of Such Trafficking?

A victim of a severe form of trafficking in persons must be ''physically present in the United States, American Samoa, or the Commonwealth of the Northern Mariana Islands, or at a port of entry thereto, on account of such trafficking.'' TVPA, section 107(e)(1)(T)(i)(II). Some traffickers arrange for entry of their victims into these jurisdictions as part of the trafficking scheme, while other traffickers prey upon aliens who are already in the United States. These aliens may have entered lawfully for a certain purpose, for instance in a student status under section 101(a)(15)(F) of the Immigration and Nationality Act (INA), or they may have entered without being admitted or paroled and are unlawfully present. The Service is interpreting the statute in light of Congressional intent to reach those aliens who are physically present under each of these circumstances if they are or were victims of severe forms of trafficking in persons occurring within those jurisdictions. The Service will take into account the circumstances relating to the alien's arrival and current presence in these jurisdictions.

As a result of this broad range of aliens who may be victims of severe forms of trafficking in persons, the Service interprets the physical presence requirement to reach those aliens who: (1) Are present because they are being held in some sort of severe form of trafficking in persons situation; (2) were recently liberated from a severe form of trafficking in persons; or (3) were subject to severe forms of trafficking in persons at some point in the past and remain present in the United States for reasons directly related to the original trafficking in persons.

If such aliens have escaped their traffickers before law enforcement became involved in the matter, they must show that they did not have a clear chance to leave the United States in the interim. The Service will consider whether an applicant had a clear chance to leave in light of the individual applicant's circumstances. Information relevant to this determination may include, but is not limited to, circumstances attributable to the trafficking in persons situation. This determination may reach both those who entered the United States lawfully and those who entered without being admitted or paroled.

The Service will consider all evidence available to determine physical presence, including requiring the alien to explain in a narrative submitted as part of Form I–914, *Application for the T Nonimmigrant Status.* This information will help Service adjudicators determine whether the alien had a clear chance to leave the United States after escaping from the trafficker, in order to determine whether an alien is present on account of trafficking.

Aliens who have traveled out of the United States and then returned will be presumed not to be here on account of trafficking in persons and will have to show that their presence here is the result of continued victimization at the hands of the traffickers or a new incident of a severe form of trafficking in persons.

It is important to note that aliens who are present in the United States without having been admitted or paroled are inadmissible, and accordingly they will have to obtain a waiver of inadmissibility in order to be eligible for T nonimmigrant status.

What Is the Difference Between Alien Smuggling and Severe Forms of Trafficking in Persons?

Federal law makes a distinction between alien smuggling—in which the smuggler arranges for an alien to enter the country illegally for any reason, including where the alien has voluntarily contracted to be smuggled—and severe forms of trafficking in persons. Unlike alien smuggling, severe forms of trafficking in persons must involve both a particular means such as the use of force, fraud, or coercion, and a particular end such as involuntary servitude or a commercial sex act (with regard to a commercial sex act, however, the use of force, fraud, or coercion is not necessary if the person induced to perform a commercial sex act is under the age of 18). Pursuant to the TVPA, victims of a severe form of trafficking in persons are persons who are recruited, harbored, transported, provided, or obtained for: (1) Labor or services, through the use of force, fraud, or coercion for the purpose of subjection to involuntary servitude, peonage, debt bondage, or slavery; or (2) the purpose of a commercial sex act in which such act is induced by force, fraud, or coercion, or in which the person induced to perform such act has not attained 18 years of age.

In most cases, aliens who are voluntarily smuggled into the United States will not be considered victims of a severe form of trafficking in persons. However, individuals who are voluntarily smuggled into the United States in order to be used for labor or services may become victims of a severe form of trafficking in persons if, for example, after arrival the smuggler uses threats of serious harm or physical restraint to force the individual into involuntary servitude, peonage, debt bondage, or slavery. Federal law prohibits forced labor regardless of the victim's initial consent to work. This distinction between alien smuggling and severe forms of trafficking in persons is consistent with the separate treatment of trafficking in persons and alien smuggling internationally.

Aliens who can establish that they are or have been a victim of a severe form of trafficking in persons, regardless of the circumstances of their arrival in the United States, may be eligible to receive various forms of assistance under sections 107(b) or (c) of the TVPA. In addition, a Federal law enforcement agency may request the Service to arrange for the alien's ''continued presence'' as provided in 28 CFR 1100.35 for purposes of the investigation and prosecution of trafficking in persons crimes.

How Is Continued Presence, Issued Under Section 107(c) of the TVPA, Related to Obtaining T–1 Status?

One of the elements an applicant for T–1 nonimmigrant status must prove is that he or she is a victim of a severe form of trafficking in persons. Documentation from the Service granting the applicant ''continued presence'' in accordance with section 107(c) of the TVPA and 28 CFR 1100.35 shall be considered as establishing victim status. Continued presence documentation shall not be valid for purposes of establishing victim status, however, if the continued presence has been revoked based on a determination that the applicant is not a victim of a severe form of trafficking in persons.

What Is a Reasonable Request for Assistance From Law Enforcement in the Investigation or Prosecution of Acts of Trafficking?

To be eligible for T nonimmigrant status, a victim of a severe form of trafficking in persons must comply with any reasonable request for assistance in the investigation or prosecution of acts of trafficking in persons (unless the victim is under the age of 15). When the

applicant submits a Law Enforcement Agency (LEA) endorsement as part of his or her application package, the LEA who requested cooperation will make the initial determination as to the cooperation of the applicant. The Service will only challenge this assertion when there is evidence that the LEA's conclusion is incorrect.

The Service interprets a ''reasonable request for assistance'' to be one made to a victim of a severe form of trafficking in persons to assist law enforcement authorities in the investigation or prosecution of acts of trafficking in persons. The Service's evaluation of the reasonableness of a request will be based on the totality of the circumstances, taking into account general law enforcement, prosecutorial, and judicial practices, the nature of the victimization, and the specific circumstances of the victim, including fear, severe traumatization (both mental and physical), and the age and maturity of young victims. Absent exceptional circumstances, it is reasonable for a law enforcement agency to ask of a victim of a severe form of trafficking in persons similar things it asks of other comparably-situated crime victims. The Service welcomes comments on how it should evaluate the reasonableness of a request for assistance from law enforcement, particularly with respect to requests made to victims who are under the age of 18.

In view of the statutory requirement for a victim of a severe form of trafficking in persons to comply with reasonable requests made by an LEA investigating or prosecuting severe forms of trafficking in persons, the victim must have had contact with a law enforcement agency regarding the incident, either by reporting the crime or by responding to inquiries from an LEA.

On the form filled out by the LEA investigator or prosecutor, Supplement B, *Declaration of Law Enforcement Officer for Victim of Trafficking in Persons*, of Form I–914, *Application for T Nonimmigrant Status*, the Service will ask for information about the victim's cooperation with that LEA. The Service also will ask the alien to provide information about his or her cooperation on Form I–914. In determining whether an alien meets this element of T–1 nonimmigrant status eligibility, the Service will look at the totality of the circumstances surrounding the alien's involvement with the law enforcement or prosecuting agency.

The alien may provide any credible evidence to meet this prong of eligibility or any other prong of eligibility. A non-exhaustive list of suggested forms of secondary evidence includes trial transcripts, court documents, police reports, news articles, and copies of reimbursement forms for travel to and from court. Under 8 CFR 103.2, affidavits are not considered primary or secondary evidence. They are another form of evidence, nonetheless. Applicants may provide their own affidavits and those from other witnesses.

If the Service has reason to believe that there is a question about the reasonableness of a request for assistance by an LEA or the applicant's compliance, and the resolution of this question is necessary for the proper adjudication of the application, the Service will contact the LEA. The Service will take all practical steps to reach an acceptable resolution with the LEA. The determination of what is a reasonable request shall be within the sole discretion of the Service.

From Whom May the Request for Law Enforcement Assistance Come?

This rule provides that any appropriate LEA with jurisdiction in the investigation or prosecution of acts of trafficking in persons may make a request for law enforcement assistance. An LEA is a Federal law enforcement or prosecuting agency, including, but not limited to, the Federal Bureau of Investigation (FBI), the Service, the United States Attorneys' Offices, the Department of Justice's Civil Rights and Criminal Divisions, the United States Marshals Service, and the Department of State's Diplomatic Security Service. While States and localities may investigate or prosecute crimes of ''trafficking in persons,'' for purposes of this rule the only agencies authorized to investigate or prosecute crimes that meet the definition under the TVPA of ''severe forms of trafficking in persons'' are those that investigate violations of the Federal offenses detailed in the TVPA. If state or local investigative or prosecuting agencies believe they have encountered a victim of a severe form of trafficking in persons, they should contact an LEA to report the crime. In this way, aliens who have only received requests to assist in the criminal investigations or prosecutions of state or local crimes also may have the opportunity to assist Federal law enforcement or prosecuting agencies and therefore meet the requirements for eligibility for T–1 nonimmigrant status under this section and the Act.

What Is the Law Enforcement Agency Endorsement?

The LEA endorsement is Supplement B, *Declaration of a Law Enforcement Officer for Victim of Trafficking in Persons*, of Form I–914, *Application for T Nonimmigrant Status*. It is issued by the authorities conducting an investigation or prosecution when they believe an individual is or has been a victim of a severe form of trafficking in persons and the victim has cooperated with any reasonable law enforcement requests. The Service has interpreted the statutory language to mean that only Federal law enforcement agencies investigating or prosecuting acts of trafficking in persons will be allowed to fill out the LEA endorsement. The Service has chosen this interpretation because severe forms of trafficking in persons are Federal crimes under the TVPA. If a state law enforcement agency believes it has encountered a victim of a severe form of trafficking in persons who would be eligible for T–1 nonimmigrant status, the state law enforcement agency or the alien should contact the local office of an LEA or the Civil Rights Division's Criminal Section. Potential victims who have not yet reported crimes to an LEA ought to contact the nearest local FBI, Service, or U.S. Attorney's office to report the trafficking in persons crime. Alternatively, the victim may contact the Department of Justice, Civil Rights Division, Trafficking in Persons and Worker Exploitation Task Force complaint line at 1–888–428–7581 to report crimes and to obtain information about LEA endorsements. It is important to recognize that an LEA, if it so desires, may only fill out an endorsement when, after a full assessment, it determines that the individual is a victim of a severe form of trafficking in persons and has complied with any reasonable request the LEA has made.

An LEA endorsement is not a mandatory part of a T–1 nonimmigrant status application. All T–1 applicants, however, are strongly encouraged to provide such an endorsement if possible. The LEA endorsement serves as primary evidence that the alien is a victim of a severe form of trafficking in persons, and has not unreasonably refused to assist in the investigation or prosecution of trafficking in persons. If the applicant chooses not to include an LEA endorsement, the Service will make an independent assessment of any credible evidence presented, in accordance with this rule, to determine if the applicant meets the cooperation with law enforcement requirement.

When Will the Service Provide Information From the Form I–914, Application for the T Nonimmigrant Status, to Other Agencies?

A victim's confidentiality and his or her safety, to the extent the law allows, will be considered when releasing information to Federal investigative agencies and/or defendants. In accordance with 42 U.S.C. 10606, Department of Justice employees will use their best efforts to see that victims of Federal crimes are accorded the rights due such victims, including the right to be treated with fairness and with respect for their dignity and privacy, and the right to be reasonably protected from accused offenders.

However, the Service may provide the information about any Federal crimes detailed to Federal investigative agencies, such as the FBI, U.S. Attorney's office, or the Department's Civil Rights or Criminal Divisions, or to the Service's Investigations unit. These contacts may be for the purpose of assessing whether an alien has complied with any reasonable request for assistance, or to promote enforcement of the Federal laws against trafficking in persons.

In addition, under established legal standards, the Department of Justice has an obligation to provide statements by witnesses and certain other documents to defendants in pending criminal proceedings. These obligations stem from constitutional, statutory, and other legal requirements that pertain to the government's duty to disclose information, including exculpatory evidence or impeachment material, to the defendant in order to prepare his or her defense. Accordingly, in any case where the Department is prosecuting a person for trafficking in persons offenses involving that victim, the Service will make appropriate arrangements with the Department of Justice component responsible for prosecution to ensure that information in the victim's application for T nonimmigrant status and other documents that fall within the scope of the Department's legal obligations will be made available on a timely basis to the Federal prosecutors.

What Happens if an Applicant Is Inadmissible Under One of the Grounds in Section 212(a) of the Immigration and Nationality Act?

A principal or derivative applicant who is or becomes inadmissible under section 212(a) of the INA will not be eligible for T nonimmigrant status unless the ground of inadmissibility is waived by the Service. If the ground of inadmissibility is one that can be waived, the alien should apply for a waiver of the grounds of inadmissibility from the Service on Form I–192, *Application for Advance Permission to Enter as Nonimmigrant (Pursuant to Section 212(d)(3) of the Immigration and Nationality Act*). Section 212(d)(3)(B) provides general authority for the Service to waive many grounds of inadmissibility for nonimmigrants. These waivers are not automatic, but may be granted in the exercise of its discretion. Form I–192 should be filed at the time of filing Form I–914.

In the TVPA, Congress recognized that victims of a severe form of trafficking in persons might need this specific relief from inadmissibility. Section 107(e)(3) of the TVPA creates additional authority for the waiver of inadmissibility, at the discretion of the Attorney General, in the case of victims of a severe form of trafficking in persons if the Attorney General considers it to be in the national interest to do so. Under new section 212(d)(13) of the INA, such victims may receive a waiver on health-related grounds (section 212(a)(1)) or on public charge grounds (section 212(a)(4)). Section 212(d)(13) of the INA also authorizes the Attorney General to waive the criminal grounds of inadmissibility in section 212(a)(2) of the INA and certain other grounds if the activities rendering the alien inadmissible were caused by or were incident to the alien's victimization.

The reference to waiver of the public charge ground should be understood in light of another section of the TVPA—section 107(b)(1)(A) and (E)—which provides that victims of severe forms of trafficking in persons who are over 18 years of age may be certified by the Department of Health and Human Services (HHS) to receive certain benefits and services ''to the same extent as an alien who is admitted to the United States as a refugee.'' Victims of a severe form of trafficking in persons under age 18 also are eligible for services to the same extent as refugees, but they do not have to be certified by HHS. Under this provision, victims may receive certain benefits and services as if they were refugees, which might include cash assistance. Refugees are provided with special humanitarian benefits because of their vulnerable circumstances, and are exempt from virtually every aspect of the public charge determination. For the purposes of receipt of public benefits, Congress has recognized that victims of severe forms of trafficking are in much the same position as refugees, and therefore has provided specific authority for the Service to exempt them from the ground of inadmissibility for aliens who are likely to become a public charge.

How Does a Victim of a Severe Form of Trafficking in Persons Apply for T–1 Nonimmigrant Status?

A victim of a severe form of trafficking in persons may apply directly to the Service for T–1 nonimmigrant status. The application requires submission of a Form I–914, a $200 filing fee (plus $50 per immediate family member) or an application for a fee waiver, a fingerprinting fee, three current identical color photographs, and evidence establishing each eligibility requirement. All necessary materials should be compiled into one application package and submitted to the Director, Vermont Service Center, 75 Lower Welden Street, St. Albans, Vermont 05479–0001.

All applicants for T nonimmigrant status must be fingerprinted for the purpose of conducting a criminal background check as part of the application process. The Service recognizes the importance of making timely determinations of *bona fide* applications in order for victims of severe forms of trafficking to receive critical health and other social services as soon as possible. After submitting an application with fee to the Service, the applicant will be notified of the proper time and location to appear for fingerprinting. In 1997, Congress created a new program that required the Service to have direct oversight of the fingerprint process and enabled the Service to add new technology for exchanging data with the FBI. As a result, the Service created the Application Support Center (ASC) program, which is currently composed of 133 offices located across the country. In addition, state-of-the-art technology and customized software have been employed at these ASCs, permitting live-scan capture of fingerprints and automated transmission of fingerprints to the FBI's Integrated Automated Fingerprint Identification System (IAFIS) electronically. As a result of these process and systems enhancements, the Service has been able to reduce the rate at which the FBI rejected these fingerprint cards from 40 percent to 3 percent, and reduced the overall FBI response time from approximately nine months to, in most cases, less than one day. The Service will continue to review fingerprint processing operational performance and build upon ongoing enhancements in applicant scheduling, live-scan biometrics capture, and automated data exchange to ensure the overall efficiency and timeliness of fingerprint

processing. As part of the forthcoming final rulemaking, the Service will consider whether any systemic issues have arisen regarding the timeliness of background checks related to the administration of this program, and consider whether any improvements need to be made by the Service to ensure timely determinations of whether an applicant has submitted a *bona fide* application.

What Are the Stages Involved With the Application Process for T Nonimmigrant Status?

There are several stages involved in the T nonimmigrant status application process: (1) The submission of an application for T–1 nonimmigrant status (which may be accompanied by applications for derivative T nonimmigrant status for immediate family members); (2) the Service's determination of whether an application for T nonimmigrant status is *bona fide*; and (3) the adjudication of the application for T nonimmigrant status. The Service will approve an application for T–1 nonimmigrant status when room is available under the cap for each fiscal year, or place the alien on the waiting list (which will be carried over to subsequent years) for the grant of a T–1 nonimmigrant status application if the cap has been reached. The cap is not affected by applications for derivative T nonimmigrant status.

Submission of an application for T–1 nonimmigrant status. In the first stage of the process, the alien submits an application for T–1 nonimmigrant status. At this stage, the victim of a severe form of trafficking in persons provides evidence sufficient to demonstrate each required element necessary for the Service to issue T–1 nonimmigrant status.

A complete application includes Form I–914, *Application for the T Nonimmigrant Status*; three identical color photographs; applicable fees or applications for fee waivers; and all evidence to fully support his or her claims to the four eligibility elements. An application also may include Supplement A, *Supplemental Application of Immediate Family Members for T–1 Recipient*, and Supplement B, *Declaration of a Law Enforcement Officer for Victim of Trafficking in Persons* of Form I–914, *Application for T Nonimmigrant Status*, and Form I–192, *Application for Advance Permission to Enter as Nonimmigrant*, for a waiver of a ground of inadmissibility, if necessary.

An Employment Authorization Document will be generated from the I–914 information. The applicant does not need to file Form I–765, *Application for Employment Authorization*, with the application package.

Determination of a bona fide application for T nonimmigrant status. The Service will review the submitted information to ensure that the application is complete and ready for adjudication, which includes that the fingerprinting and criminal background checks are completed and that the submitted information presents *prima facie* evidence for each eligibility requirement. This determination of whether there is *prima facie* evidence will be made for T–1 applications, according to the eligibility standards for that status. If the application is sufficient, the application will be determined to be a *bona fide* application for T–1 nonimmigrant status. However, if the alien is inadmissible, the Service will not consider the application to be *bona fide* unless the ground of inadmissibility is one under the circumstances described in section 212(d)(13) of the INA, as added by section 107(e) of the TVPA, or unless the Service already has granted a waiver of inadmissibility with respect to any other ground. All waivers are discretionary and require a request for a waiver. Under section 212(d)(13), however, an application can be *bona fide* before the waiver is granted. This is not the case under other grounds of inadmissibility.

The Service will not consider an application that is incomplete to be *bona fide* until the applicant submits the necessary additional evidence to establish *prima facie* eligibility for each required element of the T–1 nonimmigrant status. The Service will notify the applicant regarding the additional evidence that needs to be submitted in those circumstances, as provided in 8 CFR 103.2(b)(8).

Once an application is determined to be a *bona fide* application for T nonimmigrant status, the Service will provide written confirmation to the applicant. The Service will use various means to prevent the removal of individuals who have filed *bona fide* applications, such as deferred action, parole, and stay of removal, until the Service issues a final decision on the application. (Some victims of a severe form of trafficking in persons, however, already may have been granted ''continued presence'' as provided in section 107(c) of the TVPA and the regulation implementing it. See 66 FR 38514 (July 24, 2001) (codified at 28 CFR 1100.35).) Individuals granted deferred action, parole, or stay of removal may be granted employment authorization by filing Form I–765, *Application for Employment Authorization*, in accordance with Service policies and procedures.

Once an application for T–1 nonimmigrant status is determined to be *bona fide* by the Service, an applicant age 18 or older may apply to HHS to be certified to receive certain benefits and services to the same extent as refugees, as provided in section 107(b) of the TVPA. In order for the victim of a severe form of trafficking in persons to be eligible, HHS must certify him or her to receive such benefits and services, unless the victim is under the age of 18. The Service notes that victims under age 18 do not need to be certified, nor do they need to submit a *bona fide* application for T nonimmigrant status, in order to receive such benefits and services. To be considered a victim and therefore eligible for these benefits and services, those under 18 must be determined to have been subjected to a severe form of trafficking in persons. The Service also notes that individuals who have received ''continued presence'' under section 107(c) of the TVPA may apply to HHS to be certified.

Adjudication of applications for T nonimmigrant status. The Service has centralized the adjudication process at its Vermont Service Center. This centralization will allow adjudicators to develop expertise in handling these cases and provide for uniformity in the adjudication of these applications. If the Service finds that the alien has satisfied the requirements for T nonimmigrant status, it will either grant T nonimmigrant status or (in the case of T–1 applicants who are subject to the annual cap) place the alien on a waiting list, as discussed below.

In any case in which the Service denies an application for T nonimmigrant status, the applicant can appeal to the Administrative Appeals Office (AAO) under procedures outlined in 8 CFR 103.3.

Approval of T–1 nonimmigrant status or placement on the waiting list for the grant of T–1 nonimmigrant status. If the Service determines that there are sufficient grounds to grant T–1 nonimmigrant status, the Service will send a notice of approval to the applicant only if a T–1 nonimmigrant status number is available. When the Service grants an application for T–1 status, it will simultaneously grant employment authorization (if not already obtained).

In the event a number is not available, the Service will send the applicant a notice of placement on the waiting list.

What Will Happen if There Are More Eligible T–1 Applicants Than the Number Available for the Year?

According to the TVPA, there is a 5,000-person limit to the number of individuals who can be granted T–1 status per fiscal year (from October 1 through September 30). Once the numerical limit has been reached in a particular fiscal year, all pending and subsequently submitted applications will continue to be reviewed in the normal process to determine eligibility, but the Service will not grant T–1 nonimmigrant status prior to the beginning of the next fiscal year. Eligible applicants who are not granted T–1 status due solely to the numerical limit shall be placed on a waiting list to be maintained by the Service. In the event a number is not available, the Service will send the applicant a notice of placement on the waiting list. Applicants on the waiting list will be given priority the following fiscal year based on the date the application was properly filed. Each year, as new numbers for the T–1 nonimmigrant status become available, the Service will grant them to applicants on the waiting list.

Eligible applicants on the waiting list must be admissible at the time status is granted. Eligible applicants on the waiting list may be asked to resubmit fingerprints (and pay the appropriate fee) and photographs because of the passage of time between their submission and the date a nonimmigrant status becomes available. After the Service has granted T–1 status to applicants on the waiting list, the Service will continue to grant applications, up to the annual limit, to new applicants in the order in which each application was properly filed.

Will T–1 Applicants Be Removed From the United States While on the Waiting List?

The Service will use various means to prevent the removal of T–1 applicants on the waiting list, and their family members who are eligible for derivative T status, including its existing authority to grant deferred action, parole, and stay of removal. However, an applicant may be removed, and his or her application denied, for conduct that occurs while an alien is on the waiting list or for not disclosing relevant information at the time of filing. During this time, applicants for T status who are granted deferred action or stay of removal will not accrue unlawful presence under section 212(a)(6) or (9) of the INA. Applicants also will be able to renew their work authorization documents, as needed.

While on the waiting list, the T–1 applicant will remain in his or her current immigration status (deferred action, parole, stay of removal, or other immigration status) and will retain eligibility for employment authorization, subject to any conditions placed on that authorization, until new numbers for T–1 nonimmigrant status become available in a subsequent fiscal year.

How Will the Revocation of a T–1 Status Affect the Annual Cap?

The revocation of a T–1 status will have no effect on the annual cap. Once a T–1 status is granted, it will be deemed to have been used and cannot be used again. The Service considered re-using the T–1 status but determined it would be infeasible to track, especially if the T–1 status were granted several years ago and the individual were waiting for adjustment to lawful permanent resident status. The Service concluded that tracking when T–1 classifications are granted and then trying to backfill the numbers with additional grants or provide grants above the annual cap would put undue burden on the Service.

When Can a T–1 Nonimmigrant Apply for Derivative Status for Family Members?

An applicant for T–1 status may apply for derivative T nonimmigrant status, at the time of the original T–1 application, for his or her spouse (T–2) or child (T–3), or in the case of a child who is applying for T–1 status, the child's parents (T–4). An applicant for T–1 status or an alien who has been granted T–1 nonimmigrant status also may apply at a later date by filing a separate Form I–914 and attachments. Applications for derivative status must be accompanied by the required attachments, such as fingerprints, photographs, and fees.

How Will the Service Adjudicate Applications for Derivative Status of Family Members of a Victim of a Severe Form of Trafficking in Persons?

The annual limitation does not apply to immediate family members who are granted derivative T–2, T–3, or T–4 status. However, the Service will not grant an application for derivative T status until the principal alien has been granted T–1 status. Once the principal alien is granted T–1 nonimmigrant status, eligible family members who receive a derivative status can apply for employment authorization on Form I–765, and, if granted, receive work authorization.

What Is the Duration of the T Nonimmigrant Status?

T nonimmigrant status will be granted for 3 years. This period of stay is timed to coordinate with the separate statutory authority for adjustment of status. An alien in T nonimmigrant status is eligible to apply for adjustment of status to that of a legal permanent resident under the criteria listed in section 107(f) of the TVPA and forthcoming Service regulations. Should an alien with T nonimmigrant status leave the United States during the 3 years prior to applying for lawful permanent residence, he or she must file a Form I–131, *Application for Travel Document*, before departing the United States to obtain advanced parole in order to return to the United States. This requirement is true for T–1 principal aliens as well as family members in derivative T–2, T–3, or T–4 status.

The T nonimmigrant status is not renewable. If the alien properly files for adjustment of status to that of a person admitted for permanent residence within the 90-day period immediately preceding the third anniversary of the date of the approval of the alien's Form I–914, the alien shall continue to be in a T nonimmigrant status with all the rights, privileges, and responsibilities provided to a person possessing such status, including employment authorization, until such time as a final decision is rendered on the alien's adjustment of status. At the time an alien is approved for T nonimmigrant status, the Service shall notify the alien that his or her nonimmigrant status will expire in 3 years from the date of the approval of the alien's Form I–914, and that if the alien wishes to apply to adjust status, the alien must apply within the 90-day period immediately preceding the expiration of T nonimmigrant status.

What Is the Fee for an Application for T Nonimmigrant Status?

In the Departments of Commerce, Justice, and State, the Judiciary, and Related Agencies Appropriation Act, 1989, Pub. L. 100–459, Sec. 209, 102 Stat. 2186, 2203 (1988), Congress mandated that the Service prescribe and collect fees to recover the cost of providing certain immigration and naturalization benefits. Congress has not provided appropriated funds to pay for nonimmigrant classification programs.

The Service has determined that the fee for filing Form I–914, *Application for the T Nonimmigrant Status*, is $200. An applicant for T–1 status also will be

able to request derivative T nonimmigrant status for eligible family members for an additional fee of $50 for each person included in the same application, up to a maximum amount of $400.

Applications for immediate family members filed subsequent to the T–1 principal's application will be considered a new filing and will require the full fee of $200 for the first family member and $50 for each additional family member, up to a maximum amount of $400.

Are Fee Waivers Available?

The Service recognizes that many applicants for T nonimmigrant status may be unable to pay the full application fee. Applicants who are financially unable to pay the application fee may submit an application for a fee waiver, as outlined in 28 CFR 103.7(c). The granting of a fee waiver will be at the sole discretion of the Service. Further guidance on fee waivers can be found on the INS Web site currently at *http://www.ins.gov/graphics/formsfee/forms/index.htm#waiver.*

In addition to the filing fee for the Form I–914, applicants will have to submit the established fee for fingerprinting services for each person between the ages of 14 and 79 years inclusive with each application. This fee is currently $25 per person, and is not subject to a fee waiver. The Service has published a final rule to increase this amount to $50 per person, which takes effect February 19, 2002. See 66 FR 65811 (Dec. 21, 2001) (final rule adjusting fees for the Immigration Examinations Fee Account).

How Did the Service Arrive at the Fee Amount?

The Service arrived at the fee amount by comparing the process requirements of the new I–914 with existing adjudication procedures. The adjudication of the I–914 will be very similar to that of the I–360, *Petition for a Special Immigrant.* The application also will be used to generate an Employment Authorization Document (EAD), taking the place of a separate I–765, *Application for Employment Authorization.* The fee for the I–360 is $110, and the fee for the I–765 is $100. These fees are scheduled to be increased to $130 and $120 respectively on February 19, 2002. The sum of the two fees ($250) is reduced to $240 to reflect that only one form needs handling and tracking. Furthermore, there is no separate adjudication required for employment authorization for T principals, who are authorized to work incident to status. As a result, this fee has been further reduced to reflect saved adjudication expenses and to take into account that only the T principal's EAD is incident to status. Based on these calculations, the Service set the fee at $200. The addition of $50 for each additional person included on the form was based on a comparison of the I–914 process to the processing of Form I–687, *Application for Status as Temporary Resident,* which also requires an additional fee of $50 per additional person on the application. The Service conducts evaluations of the required fees every two years to ensure that they are fair and accurate. The fee charged for the Form I–914 will be reviewed periodically and adjusted, as appropriate.

May T–1 Applicants and Applicants for T Derivative Status Apply From a Foreign Country?

Applicants for T–1 status must be physically present in the United States at the time of application. However, the T–1 principal alien may apply to the Service for derivative T nonimmigrant status on behalf of immediate family members who are following to join the T–1 principal. The Service may approve applications for T–2, T–3, or T–4 status for eligible immediate family members if they are admissible to the United States and can meet the requirement to demonstrate extreme hardship. If the Service grants the application for derivative T nonimmigrant status for aliens who are currently abroad, the Service will notify the appropriate consular office and make arrangements for the issuance of the necessary visas for admission of those eligible family members.

Can Victims of a Severe Form of Trafficking in Persons That Occurred Prior to the Enactment of the TVPA Apply for a T Nonimmigrant Classification?

Yes. Victims of a severe form of trafficking in persons whose victimization occurred prior to enactment of the TVPA on October 28, 2000, may file a completed application. The Service recommends that victims file applications as soon as possible because delays could result in difficulty in establishing statutory eligibility requirements. Section 214.11(d)(4) of this rule provides that, if the victimization occurred prior to the enactment of the TVPA, the alien must file the application for T–1 status within one year of the effective date of this rule, except in exceptional circumstances or within one year after the victim reaches his or her 21st birthday, whichever comes later.

Does Applying for T Nonimmigrant Status Prevent the Applicant From Applying for Other Types of Immigration Benefits?

No. An alien may apply for any and all immigration benefits for which the alien may be eligible. However, an alien may not hold more than one nonimmigrant status at a time. Nothing in this regulation or in the TVPA limits a qualified applicant from seeking other immigration benefits while pursuing T status. In addition, aliens granted continued presence may be eligible to receive certain benefits and services authorized by section 107(b)(1) of the TVPA.

Can a Victim Who Is in Exclusion, Deportation, or Removal Proceedings Before an Immigration Judge or the Board of Immigration Appeals (Board) Apply for T Nonimmigrant Status?

Jurisdiction over all applications for T nonimmigrant status rests with the Service. However, a victim of a severe form of trafficking in persons who is currently in proceedings before an immigration judge or the Board may request Service counsel to consent to having the proceedings administratively closed (or that a motion to reopen or motion to reconsider be indefinitely continued) in order to allow the alien to pursue an application for T nonimmigrant status with the Service.

As noted above, in order to be eligible for T nonimmigrant status, the alien must demonstrate that he or she is admissible to the United States, or must obtain a waiver of inadmissibility from the Service. An application from an alien who is inadmissible on grounds other than under the circumstances specified in section 212(d)(13) of the INA will not be considered to be *bona fide* unless the Service has granted a waiver of those other grounds. Accordingly, the Service will consider consenting to the administrative closure of the immigration proceedings for the purpose of filing an application for T nonimmigrant status only if there is a good reason to believe that the alien will be able to satisfy the eligibility requirements for the T status, including admissibility. (The Service notes, however, that it may arrange for the continued presence in the United States of a victim of a severe form of trafficking in persons, pursuant to 28 CFR 1100.35, during such time as an LEA has requested the alien's presence in the United States for purposes of investigating and prosecuting acts of severe forms of trafficking in persons. The Service will not act to remove an alien from the United States until the

law enforcement need for the alien's continued presence has come to an end or the alien has violated the terms of the continued presence.)

The Service also acknowledges that, in some cases, an alien who is in immigration proceedings may be able to file a *bona fide* application for T nonimmigrant status. With respect to the medical and public charge grounds of inadmissibility, and certain other grounds of inadmissibility that were caused by or are incident to the alien's victimization, section 212(d)(13) of the INA provides additional authority for the waiver of these grounds in the case of applicants for T nonimmigrant status. For example, a victim of a severe form of trafficking in persons who had been forced into prostitution may well be able to make a *bona fide* application for T–1 status even though the alien has been placed into removal proceedings on grounds relating to those prostitution activities.

With the concurrence of Service counsel, if the alien appears eligible for T nonimmigrant status, the immigration judge or the Board, whichever has jurisdiction, may administratively close the proceeding or continue a motion to reopen or motion to reconsider indefinitely. In the event the Service subsequently denies the alien's application for T nonimmigrant status, the Service will recommence proceedings that have been administratively closed by filing a motion to re-calendar with the Immigration Court or a motion to reinstate with the Board.

Can a Victim of Trafficking in Persons With a Final Order of Exclusion, Deportation, or Removal Apply for T Nonimmigrant Status?

An alien who is the subject of a final order is not precluded from filing an application for T nonimmigrant status directly with the Service. In order to be eligible, an applicant for T nonimmigrant status must be admissible to the United States, and the Service notes that few aliens who are the subject of a final order of exclusion, deportation or removal will be able to satisfy that requirement. Thus, in general, the filing of an application for T nonimmigrant status will have no effect on the status of an alien who is subject to a final order.

In those cases where the only basis for the final order of removal is one of the grounds of inadmissibility described in section 212(d)(13) of the INA, the alien may be able to file a meritorious application for T nonimmigrant status. If the Service determines, as provided in this rule, that an alien's application for T status meets the requirements for a *bona fide* application, the Service will automatically stay execution of the final order of deportation, exclusion, or removal. Such a stay remains in effect until a final decision is made on the T application. If the T application is denied, the stay of the final order is deemed lifted as of the date of such a denial, without regard to whether the alien appeals the denial. However, the alien may apply for a discretionary stay of removal from the Service as provided in § 241.6(a).

If the application for T nonimmigrant status is granted, the final order shall be deemed canceled by operation of law as of the date of the approval.

What Happens to Victims of Severe Forms of Trafficking in Persons Arriving at a Port of Entry Who Are Subject to Expedited Removal?

Expedited removal applies to an ''arriving alien'', as defined in 8 CFR 1.1(q), when the alien is inadmissible pursuant to section 212(a)(6)(C) or 212(a)(7) of the INA. Current Service procedures protect and provide services to victims of a severe form of trafficking in persons when Federal law enforcement officials encounter such victims, including those aliens arriving at ports of entry. 28 CFR 1100.31. In addition, the Service is developing screening procedures to ensure that arriving aliens who are subject to the statutory provisions for expedited removal at ports of entry will, when applicable, be considered for T nonimmigrant status. An alien subject to expedited removal who expresses that he or she is a victim of a severe form of trafficking in persons will be interviewed by a Service officer immediately to determine whether there is reason to believe the individual is such a victim. Following such a determination, the victim will be referred to a District Office and will be interviewed by a Service officer responsible for investigating trafficking in persons within 7 days of arrival to determine whether the individual has a credible claim to victimization. The Service may inform an LEA that also investigates or prosecutes trafficking in persons about the individual's claim. If the alien has a credible claim to victimization, he or she will be given the opportunity to submit an application for T status pursuant to section 101(a)(15)(T) of the INA and any other benefit or protection for which they may be eligible. An arriving alien determined not to have a credible claim to being a victim of a severe form of trafficking in persons in the United States will be subject to expedited removal in accordance with Service policy.

Regulatory Procedures

Good Cause Exception

This interim rule is effective 30 days from the date of publication. The Service invites post-promulgation comments and will address any such comments in a final rule. The Department finds that good cause exists for adopting this rule without the prior notice and comment period ordinarily required by 5 U.S.C. 553(b), because, in light of the public safety implications of the rule, giving prior notice and opportunity for comment would be contrary to the public interest.

In passing the TVPA, Congress intended to create a broad range of tools to be used by the Federal government to combat the serious and immediate problem of trafficking in persons. The provisions of the TVPA address the effect of severe forms of trafficking in persons on victims, including many who may not have legal status and are reluctant to cooperate. In trafficking in persons situations, perpetrators often target individuals who are likely to be particularly vulnerable and unfamiliar with their surroundings. The TVPA strengthens the ability of government officials to investigate and prosecute trafficking in persons crimes by providing for temporary immigration benefits to victims of severe forms of trafficking in persons. This interim rule implements a legal nonimmigrant immigration status for eligible victims who have not refused any reasonable request to assist in the investigation or prosecution of a crime and can demonstrate that they would suffer extreme hardship involving severe and unusual harm if removed from the United States. Under section 107(b) of the TVPA, the filing of a *bona fide* application for T nonimmigrant status provides a basis to seek certification of the alien for purposes of eligibility for certain public benefits. In addition, this regulation provides certain victims with work authorization so that they may seek lawful employment. Without the prompt promulgation of this rule, victims of severe forms of trafficking in persons might continue to be victimized for fear of coming forward, thus hindering the ability of law enforcement to investigate and prosecute cases and preventing victims from obtaining critical assistance and benefits.

The issuance of these regulations as an interim rule effective 30 days after publication will allow victims to receive needed benefits and assistance as soon as possible. The 30-day delay in the

effective date will provide a brief interim period in which forms, informational brochures, and other guidance will be made available to Federal, state, tribal and local law enforcement officers and officials as well as non-profit victims rights and services groups. Because prior notice and comment with respect to this interim rule is contrary to the public interest, given the public safety implications of this rule, there is ''good cause'' under 5 U.S.C. 553 to make this rule effective March 4, 2002.

Regulatory Flexibility Act

In accordance with the Regulatory Flexibility Act (5 U.S.C. 605(b)), the Attorney General, by approving this regulation, certifies that this rule will not have a significant economic impact on a substantial number of small entities. The Attorney General has reviewed this regulation in light of its potential impact on small businesses. The businesses that would be most significantly affected by this rule would be those in which the illegal act of trafficking in persons contributed to, or composed the majority of, their workforce. The human rights and criminal issues associated with such trafficking in persons are seen as more significant than the impact on small businesses that are dependent on illegal or coerced labor in violation of United States law.

Unfunded Mandates Reform Act of 1995

This rule will not result in the expenditure by state, local and tribal governments, in the aggregate, or by the private sector, of $100 million or more in one year, and it will not significantly or uniquely affect small governments. Therefore, no actions were deemed necessary under the provisions of the Unfunded Mandates Reform Act of 1995.

Small Business Regulatory Enforcement Fairness Act of 1996

This rule is not a major rule as defined by section 251 of the Small Business Regulatory Enforcement Act of 1996. 5 U.S.C. 804. This rule will not result in an annual effect on the economy of $100 million or more; a major increase in costs or prices; or significant adverse effects on competition, employment, investment, productivity, innovation, or on the ability of United States-based companies to compete with foreign-based companies in domestic and export markets.

Executive Order 12866

This rule is considered by the Department of Justice to be a significant regulatory action under Executive Order 12866, section 3(f), Regulatory Planning and Review. Accordingly, this regulation has been submitted to the Office of Management and Budget for review.

Paperwork Reduction Act

The information collection requirements contained in this rule have been cleared by the Office of Management and Budget (OMB) under the provisions of the Paperwork Reduction Act. Clearance numbers for these collections are contained in 8 CFR 299.5, Display Control Numbers, and are noted herein. Form I–131, *Application for Travel Document*, OMB Control Number 1115–0062; Form I–192, *Application for Advance Permission to Enter as Nonimmigrant*, OMB Control Number 1115–0028; Form I–765, *Application for Employment Authorization*, OMB Control Number 1115–0163. In addition, one new Service form, Form I–914, *Application for T Nonimmigrant Status*, has received clearance from OMB and was assigned OMB Control Number 1115–0246.

Executive Order 13132

This rule will not have a substantial direct effect on the States, on the relationship between the National Government and the States, or on the distribution of power and responsibilities among the various levels of government. Therefore, in accordance with section 6 of Executive Order 13132, it is determined that this rule does not have sufficient Federalism implications to warrant the preparation of a Federalism summary impact statement.

Executive Order 12988 Civil Justice Reform

This final rule meets the applicable standards set forth in sections 3(a) and 3(b)(2) of Executive Order 12988.

List of Subjects

8 CFR Part 103

Administrative practice and procedure, Authority delegations (Government agencies), Freedom of information, Privacy, Reporting and recordkeeping requirements, Surety bonds.

8 CFR Part 212

Administrative practice and procedure, Aliens, Immigration, Passports and visas, Reporting and recordkeeping requirements.

8 CFR Part 214

Administrative practice and procedure, Aliens, Cultural exchange programs, Employment, Foreign officials, Health professions, Reporting and recordkeeping requirements, Students, Victims.

8 CFR Part 274a

Administrative practice and procedure, Aliens, Employment, Penalties, Reporting and recordkeeping requirements.

8 CFR Part 299

Immigration, Reporting and recordkeeping requirements.

Accordingly, chapter I of title 8 of the Code of Federal Regulations is amended as follows:

PART 103—POWERS AND DUTIES OF SERVICE OFFICERS; AVAILABILITY OF SERVICE RECORDS

1. The authority citation for part 103 continues to read as follows:

Authority: 5 U.S.C. 552, 552a; 8 U.S.C. 1101, 1103, 1304, 1356; 31 U.S.C. 9701; E.O 12356, 47 FR 14874, 15557, 3 CFR, 1982 Comp., p. 166; 8 CFR part 2.

2. Section 103.1 is amended by:

a. Revising paragraph (f)(3))(iii)(W);

b. Removing the word ''and'' at the end of paragraph (f)(3)(iii)(MM);

c. Removing the period at the end of paragraph (f)(3)(iii)(NN) and adding ''; and'' in its place; and by

d. Adding a new paragraph (f)(3)(iii)(OO) to read as follows:

§ 103.1 Delegation of authority.

* * * * *

(f) * * *

(3) * * *

(iii) * * *

(W) Revoking approval of certain applications, as provided in §§ 214.2, 214.6, and 214.11 of this chapter;

* * * * *

(OO) Applications for T nonimmigrant status under § 214.11 of this chapter.

* * * * *

3. Section 103.7(b)(1) is amended by adding, in proper alpha/numeric sequence, a new Form ''I–914,'' to read as follows:

§ 103.7 Fees.

* * * * *

(b) * * *

(1) * * *

Form I–914. For filing an application to classify an alien as a nonimmigrant under section 101(a)(15)(T) of the Act (victims of a severe form of trafficking in persons and their immediate family

members)—$200. For each immediate family member included on the same application, an additional fee of $50 per person, up to a maximum amount payable per application of $400.

* * * * *

PART 212—DOCUMENTARY REQUIREMENTS: NONIMMIGRANTS; WAIVERS; ADMISSION OF CERTAIN INADMISSIBLE ALIENS; PAROLE

4. The authority citation for part 212 continues to read as follows:

Authority: 8 U.S.C. 1101, 1102, 1103, 1182, 1184, 1187, 1225, 1226, 1227; 8 CFR part 2.

5. Section 212.1 is amended by revising paragraph (g) and adding a new paragraph (o), to read as follows:

§ 212.1 Documentary requirements for nonimmigrants.

* * * * *

(g) *Unforeseen emergency.* A nonimmigrant seeking admission to the United States must present an unexpired visa and a passport valid for the amount of time set forth in section 212(a)(7)(B) of the Act, or a valid border crossing identification card at the time of application for admission, unless the nonimmigrant satisfies the requirements described in one or more of the paragraphs (a) through (f), (i), or (o) of this section. Upon a nonimmigrant's application on Form I–193, a district director at a port of entry may, in the exercise of his or her discretion, on a case-by-case basis, waive the documentary requirements, if satisfied that the nonimmigrant cannot present the required documents because of an unforeseen emergency. The district director or the Deputy Commissioner may at any time revoke a waiver previously authorized pursuant to this paragraph and notify the nonimmigrant in writing to that effect.

* * * * *

(o) *Alien in T–2 through T–4 classification.* Individuals seeking T–2 through T–4 nonimmigrant status may avail themselves of the provisions of paragraph (g) of this section, except that the authority to waive documentary requirements resides with the Service Center.

6. Section 212.16 is added, to read as follows:

§ 212.16 Applications for exercise of discretion relating to T nonimmigrant status.

(a) *Filing the waiver application.* An alien applying for the exercise of discretion under section 212(d)(13) or (d)(3)(B) of the Act (waivers of inadmissibility) in connection with an application for T nonimmigrant status shall submit Form I–192, with the appropriate fee in accordance with § 103.7(b)(1) of this chapter or an application for a fee waiver, to the Service with the completed Form I–914 application package for status under section 101(a)(15)(T)(i) of the Act.

(b) *Treatment of waiver application.* (1) The Service shall determine whether a ground of inadmissibility exists with respect to the alien applying for T nonimmigrant status. If a ground of inadmissibility is found, the Service shall determine if it is in the national interest to exercise discretion to waive the ground of inadmissibility, except for grounds of inadmissibility based upon sections 212(a)(3), 212(a)(10)(C) and 212(a)(10)(E) of the Act, which the Commissioner may not waive. Special consideration will be given to the granting of a waiver of a ground of inadmissibility where the activities rendering the alien inadmissible were caused by or incident to the victimization described under section 101(a)(15)(T)(i) of the Act.

(2) In the case of applicants inadmissible on criminal and related grounds under section 212(a)(2) of the Act, the Service will only exercise its discretion in exceptional cases unless the criminal activities rendering the alien inadmissible were caused by or were incident to the victimization described under section 101(a)(15)(T)(i) of the Act.

(3) An application for waiver of a ground of inadmissibility for T nonimmigrant status (other than under section 212(a)(6) of the Act) will be granted only in exceptional cases when the ground of inadmissibility would prevent or limit the ability of the applicant to adjust to permanent resident status after the conclusion of 3 years.

(4) The Service shall have sole discretion to grant or deny a waiver, and there shall be no appeal of a decision to deny a waiver. However, nothing in this paragraph (b) is intended to prevent an applicant from re-filing a request for a waiver of a ground of inadmissibility in appropriate cases.

(c) *Incident to victimization.* When an applicant for status under section 101(a)(15)(T) of the Act seeks a waiver of a ground of inadmissibility under section 212(d)(13) of the Act on grounds other than those described in sections 212(a)(1) and (a)(4) of the Act, the applicant must establish that the activities rendering him or her inadmissible were caused by, or were incident to, the victimization described in section 101(a)(15)(T)(i)(I) of the Act.

(d) *Revocation.* The Commissioner may at any time revoke a waiver previously authorized under section 212(d) of the Act. Under no circumstances shall the alien or any party acting on his or her behalf have a right to appeal from a decision to revoke a waiver.

PART 214—NONIMMIGRANT CLASSES

7. The authority citation for part 214 is revised to read as follows:

Authority: 8 U.S.C. 1101, 1101 note, 1103, 1182, 1184, 1186a, 1187, 1221, 1281, 1282; Section 643 of Pub. L. 104–208, 110 Stat. 3009–708; Pub. L. 106–386, 114 Stat. 1477–1480; Section 141 of the Compacts of Free Association with the Federated States of Micronesia and the Republic of the Marshall Islands, and with the Government of Palau, 48 U.S.C. 1901 note, and 1931 note, respectively; 8 CFR part 2.

8. Section 214.1 is amended by:

a. Removing the ''and'' at the end of paragraph (a)(1)(vi);

b. Removing the period at the end of paragraph (a)(1)(vii) and adding '';'' in its place;

c. Adding paragraph (a)(1)(viii); and by

d. Adding in proper numeric/alphabetical sequence in paragraph (a)(2) the classification designations, to read as follows:

§ 214.1 Requirements for admission, extension, and maintenance of status.

(a) * * *

(1) * * *

(viii) Section 101(a)(15)(T)(ii) is divided into (T)(ii), (T)(iii) and (T)(iv) for the spouse, child, and parent, respectively, of a nonimmigrant classified under section 101(a)(15)(T)(i); and

(2) * * *

* * * * *

101(a)(15)(T)(i)—T–1
101(a)(15)(T)(ii)—T–2
101(a)(15)(T)(iii)—T–3
101(a)(15)(T)(iv)—T–4

* * * * *

9. A new § 214.11 is added to read as follows:

§ 214.11 Alien victims of severe forms of trafficking in persons.

(a) *Definitions.* The Service shall apply the following definitions as provided in sections 103 and 107(e) of the Trafficking Victims Protection Act (TVPA) with due regard for the definitions and application of these terms in 28 CFR part 1100 and the provisions of chapter 77 of title 18, United States Code:

Bona fide application means an application for T–1 nonimmigrant status

as to which, after initial review, the Service has determined that there appears to be no instance of fraud in the application, the application is complete, properly filed, contains an LEA endorsement or credible secondary evidence, includes completed fingerprint and background checks, and presents *prima facie* evidence to show eligibility for T nonimmigrant status, including admissibility.

Child means a person described as such in section 101(b)(1) of the Act.

Coercion means threats of serious harm to or physical restraint against any person; any scheme, plan, or pattern intended to cause a person to believe that failure to perform an act would result in serious harm to or physical restraint against any person; or the abuse or threatened abuse of the legal process.

Commercial sex act means any sex act on account of which anything of value is given to or received by any person.

Debt bondage means the status or condition of a debtor arising from a pledge by the debtor of his or her personal services or of those of a person under his or her control as a security for debt, if the value of those services as reasonably assessed is not applied toward the liquidation of the debt or the length and nature of those services are not respectively limited and defined.

Immediate family member means the spouse or a child of a victim of a severe form of trafficking in persons, and, in the case of a victim of a severe form of trafficking in persons who is under 21 years of age, a parent of the victim.

Involuntary servitude means a condition of servitude induced by means of any scheme, plan, or pattern intended to cause a person to believe that, if the person did not enter into or continue in such condition, that person or another person would suffer serious harm or physical restraint; or the abuse or threatened abuse of legal process. Accordingly, involuntary servitude includes ''a condition of servitude in which the victim is forced to work for the defendant by the use or threat of physical restraint or physical injury, or by the use or threat of coercion through law or the legal process. This definition encompasses those cases in which the defendant holds the victim in servitude by placing the victim in fear of such physical restraint or injury or legal coercion.'' (*United States* v. *Kozminski,* 487 U.S. 931, 952 (1988)).

Law Enforcement Agency (LEA) means any Federal law enforcement agency that has the responsibility and authority for the detection, investigation, or prosecution of severe forms of trafficking in persons. LEAs include the following components of the Department of Justice: the United States Attorneys' Offices, the Civil Rights and Criminal Divisions, the Federal Bureau of Investigation (FBI), the Immigration and Naturalization Service (Service), and the United States Marshals Service. The Diplomatic Security Service, Department of State, also is an LEA.

Law Enforcement Agency (LEA) endorsement means Supplement B, *Declaration of Law Enforcement Officer for Victim of Trafficking in Persons* of Form I–914, *Application for T Nonimmigrant Status.*

Peonage means a status or condition of involuntary servitude based upon real or alleged indebtedness.

Reasonable request for assistance means a reasonable request made by a law enforcement officer or prosecutor to a victim of a severe form of trafficking in persons to assist law enforcement authorities in the investigation or prosecution of the acts of trafficking in persons. The ''reasonableness'' of the request depends on the totality of the circumstances taking into account general law enforcement and prosecutorial practices, the nature of the victimization, and the specific circumstances of the victim, including fear, severe traumatization (both mental and physical), and the age and maturity of young victims.

Severe forms of trafficking in persons means sex trafficking in which a commercial sex act is induced by force, fraud, or coercion, or in which the person induced to perform such act has not attained 18 years of age; or the recruitment, harboring, transportation, provision, or obtaining of a person for labor or services, through the use of force, fraud, or coercion for the purpose of subjection to involuntary servitude, peonage, debt bondage, or slavery.

Sex trafficking means the recruitment, harboring, transportation, provision, or obtaining of a person for the purpose of a commercial sex act.

TVPA means the Trafficking Victims Protection Act of 2000, Division A of the VTVPA, Pub. L. 106–386.

United States means the continental United States, Alaska, Hawaii, Puerto Rico, Guam, and the United States Virgin Islands.

Victim of a severe form of trafficking in persons means an alien who is or has been subject to a severe form of trafficking in persons, as defined in section 103 of the VTVPA and in this section.

VTVPA means the Victims of Trafficking and Violence Protection Act of 2000, Pub. L. 106–386.

(b) *Eligibility.* Under section 101(a)(15)(T)(i) of the Act, and subject to section 214(n) of the Act, the Service may classify an alien, if otherwise admissible, as a T–1 nonimmigrant if the alien demonstrates that he or she:

(1) Is or has been a victim of a severe form of trafficking in persons;

(2) Is physically present in the United States, American Samoa, or the Commonwealth of the Northern Mariana Islands, or at a port-of-entry thereto, on account of such trafficking in persons;

(3) Either:

(i) Has complied with any reasonable request for assistance in the investigation or prosecution of acts of such trafficking in persons, or

(ii) Is less than 15 years of age; and

(4) Would suffer extreme hardship involving unusual and severe harm upon removal, as described in paragraph (i) of this section.

(c) *Aliens ineligible for T nonimmigrant status.* No alien, otherwise admissible, shall be eligible to receive a T nonimmigrant status under section 101(a)(15)(T) of the Act if there is substantial reason to believe that the alien has committed an act of a severe form of trafficking in persons.

(d) *Application procedures for T status.*

(1) *Filing an application.* An applicant seeking T nonimmigrant status shall submit, by mail, a complete application package containing Form I–914, *Application for T Nonimmigrant Status,* along with all necessary supporting documentation, to the Service.

(2) *Contents of the application package.* In addition to Form I–914, an application package must include the following:

(i) The proper fee for Form I–914 as provided in § 103.7(b)(1) of this chapter, or an application for a fee waiver as provided in § 103.7(c) of this chapter;

(ii) Three current photographs;

(iii) The fingerprint fee as provided in § 103.7(b)(1) of this chapter;

(iv) Evidence demonstrating that the applicant is a victim of a severe form of trafficking in persons as set forth in paragraph (f) of this section;

(v) Evidence that the alien is physically present in the United States on account of a severe form of trafficking in persons as set forth in paragraph (g) of this section;

(vi) Evidence that the applicant has complied with any reasonable request for assistance in the investigation or prosecution of acts of severe forms of trafficking in persons, as set forth in paragraph (h) of this section, or has not attained 15 years of age; and

(vii) Evidence that the applicant would suffer extreme hardship involving unusual and severe harm if he

or she were removed from the United States, as set forth in paragraph (i) of this section.

(3) *Evidentiary standards.* The applicant may submit any credible evidence relevant to the essential elements of the T nonimmigrant status. Original documents or copies may be submitted as set forth in § 103.2(b)(4) and (b)(5) of this chapter. Any document containing text in a foreign language shall be submitted in accordance with § 103.2(b)(3) of this chapter.

(4) *Filing deadline in cases in which victimization occurred prior to October 28, 2000.* Victims of a severe form of trafficking in persons whose victimization occurred prior to October 28, 2000 must file a completed application within one (1) year of January 31, 2002 in order to be eligible to receive T–1 nonimmigrant status. If the victimization occurred prior to October 28, 2000, an alien who was a child at the time he or she was a victim of a severe form of trafficking in persons must file a T status application within one (1) year of his or her 21st birthday, or one (1) year of January 31, 2002, whichever is later. For purposes of determining the filing deadline, an act of severe form of trafficking in persons will be deemed to have occurred on the last day in which an act constituting an element of a severe form of trafficking in persons, as defined in paragraph (a) of this section, occurred. If the applicant misses the deadline, he or she must show that exceptional circumstances prevented him or her from filing in a timely manner. Exceptional circumstances may include severe trauma, either psychological or physical, that prevented the victim from applying within the allotted time.

(5) *Fingerprint procedure.* All applicants for T nonimmigrant status must be fingerprinted for the purpose of conducting a criminal background check in accordance with the process and procedures described in § 103.2(e) of this chapter. After submitting an application with fee to the Service, the applicant will be notified of the proper time and location to appear for fingerprinting.

(6) *Personal interview.* After the filing of an application for T nonimmigrant status, the Service may require an applicant to participate in a personal interview. The necessity of an interview is to be determined solely by the Service. All interviews will be conducted in person at a Service-designated location. Every effort will be made to schedule the interview in a location convenient to the applicant.

(7) *Failure to appear for an interview or failure to follow fingerprinting requirements.*

(i) Failure to appear for a scheduled interview without prior authorization or to comply with fingerprint processing requirements may result in the denial of the application.

(ii) Failure to appear shall be excused if the notice of the interview or fingerprint appointment was not mailed to the applicant's current address and such address had been provided to the Service unless the Service determines that the applicant received reasonable notice of the appointment. The applicant must notify the Service of any change of address in accordance with § 265.1 of this chapter prior to the date on which the notice of the interview or fingerprint appointment was mailed to the applicant.

(iii) Failure to appear at the interview or fingerprint appointment may be excused, at the discretion of the Service, if the applicant promptly contacts the Service and demonstrates that such failure to appear was the result of exceptional circumstances.

(8) *Aliens in pending immigration proceedings.* Individuals who believe they are victims of severe forms of trafficking in persons and who are in pending immigration proceedings must inform the Service if they intend to apply for T nonimmigrant status under this section. With the concurrence of Service counsel, a victim of a severe form of trafficking in persons in proceedings before an immigration judge or the Board of Immigration Appeals (Board) may request that the proceedings be administratively closed (or that a motion to reopen or motion to reconsider be indefinitely continued) in order to allow the alien to pursue an application for T nonimmigrant status with the Service. If the alien appears eligible for T nonimmigrant status, the immigration judge or the Board, whichever has jurisdiction, may grant such a request to administratively close the proceeding or continue a motion to reopen or motion to reconsider indefinitely. In the event the Service finds an alien ineligible for T–1 nonimmigrant status, the Service may recommence proceedings that have been administratively closed by filing a motion to re-calendar with the immigration court or a motion to reinstate with the Board. If the alien is in Service custody pending the completion of immigration proceedings, the Service may continue to detain the alien until a decision has been rendered on the application. An alien who is in custody and requests bond or a bond redetermination will be governed by the provisions of part 236 of this chapter.

(9) *T applicants with final orders of exclusion, deportation or removal.* An alien who is the subject of a final order is not precluded from filing an application for T–1 nonimmigrant status directly with the Service. The filing of an application for T nonimmigrant status has no effect on the Service's execution of a final order, although the alien may file a request for stay of removal pursuant to § 241.6(a) of this chapter. However, if the Service subsequently determines, under the procedures of this section, that the application is *bona fide,* the Service will automatically stay execution of the final order of deportation, exclusion, or removal, and the stay will remain in effect until a final decision is made on the T–1 application. The time during which such a stay is in effect shall not be counted in determining the reasonableness of the duration of the alien's continued detention under the standards of § 241.4 of this chapter. If the T–1 application is denied, the stay of the final order is deemed lifted as of the date of such denial, without regard to whether the alien appeals the decision. If the Service grants an application for T nonimmigrant status, the final order shall be deemed canceled by operation of law as of the date of the approval.

(e) *Dissemination of information.* In appropriate cases, and in accordance with Department of Justice policies, the Service shall make information from applications for T–1 nonimmigrant status available to other Law Enforcement Agencies (LEAs) with the authority to detect, investigate, or prosecute severe forms of trafficking in persons. The Service shall coordinate with the appropriate Department of Justice component responsible for prosecution in all cases where there is a current or impending prosecution of any defendants who may be charged with severe forms of trafficking in persons crimes in connection with the victimization of the applicant to ensure that the Department of Justice component responsible for prosecution has access to all witness statements provided by the applicant in connection with the application for T–1 nonimmigrant status, and any other documents needed to facilitate investigation or prosecution of such severe forms of trafficking in persons offenses.

(f) *Evidence demonstrating that the applicant is a victim of a severe form of trafficking in persons.* The applicant must submit evidence that fully establishes eligibility for each element

of the T nonimmigrant status to the satisfaction of the Attorney General. First, an alien must demonstrate that he or she is a victim of a severe form of trafficking in persons. The applicant may satisfy this requirement either by submitting an LEA endorsement, by demonstrating that the Service previously has arranged for the alien's continued presence under 28 CFR 1100.35, or by submitting sufficient credible secondary evidence, describing the nature and scope of any force, fraud, or coercion used against the victim (this showing is not necessary if the person induced to perform a commercial sex act is under the age of 18). An application must contain a statement by the applicant describing the facts of his or her victimization. In determining whether an applicant is a victim of a severe form of trafficking in persons, the Service will consider all credible and relevant evidence.

(1) *Law Enforcement Agency endorsement.* An LEA endorsement is not required. However, if provided, it must be submitted by an appropriate law enforcement official on Supplement B, *Declaration of Law Enforcement Officer for Victim of Trafficking in Persons,* of Form I–914. The LEA endorsement must be filled out completely in accordance with the instructions contained on the form and must attach the results of any name or database inquiry performed. In order to provide persuasive evidence, the LEA endorsement must contain a description of the victimization upon which the application is based (including the dates the severe forms of trafficking in persons and victimization occurred), and be signed by a supervising official responsible for the investigation or prosecution of severe forms of trafficking in persons. The LEA endorsement must address whether the victim had been recruited, harbored, transported, provided, or obtained specifically for either labor or services, or for the purposes of a commercial sex act. The traffickers must have used force, fraud, or coercion to make the victim engage in the intended labor or services, or (for those 18 or older) the intended commercial sex act. The situations involving labor or services must rise to the level of involuntary servitude, peonage, debt bondage, or slavery. The decision of whether or not to complete an LEA endorsement for an applicant shall be at the discretion of the LEA.

(2) *Primary evidence of victim status.* The Service will consider an LEA endorsement as primary evidence that the applicant has been the victim of a severe form of trafficking in persons provided that the details contained in the endorsement meet the definition of a severe form of trafficking in persons under this section. In the alternative, documentation from the Service granting the applicant continued presence in accordance with 28 CFR 1100.35 will be considered as primary evidence that the applicant has been the victim of a severe form of trafficking in persons, unless the Service has revoked the continued presence based on a determination that the applicant is not a victim of a severe form of trafficking in persons.

(3) *Secondary evidence of victim status; Affidavits.* Credible secondary evidence and affidavits may be submitted to explain the nonexistence or unavailability of the primary evidence and to otherwise establish the requirement that the applicant be a victim of a severe form of trafficking in persons. The secondary evidence must include an original statement by the applicant indicating that he or she is a victim of a severe form of trafficking in persons; credible evidence of victimization and cooperation, describing what the alien has done to report the crime to an LEA; and a statement indicating whether similar records for the time and place of the crime are available. The statement or evidence should demonstrate that good faith attempts were made to obtain the LEA endorsement, including what efforts the applicant undertook to accomplish these attempts. Applicants are encouraged to provide and document all credible evidence, because there is no guarantee that a particular piece of evidence will result in a finding that the applicant was a victim of a severe form of trafficking in persons. If the applicant does not submit an LEA endorsement, the Service will proceed with the adjudication based on the secondary evidence and affidavits submitted. A non-exhaustive list of secondary evidence includes trial transcripts, court documents, police reports, news articles, and copies of reimbursement forms for travel to and from court. In addition, applicants may also submit their own affidavit and the affidavits of other witnesses. The determination of what evidence is credible and the weight to be given that evidence shall be within the sole discretion of the Service.

(4) *Obtaining an LEA endorsement.* A victim of a severe form of trafficking in persons who does not have an LEA endorsement should contact the LEA to which the alien has provided assistance to request an endorsement. If the applicant has not had contact with an LEA regarding the acts of severe forms of trafficking in persons, the applicant should promptly contact the nearest Service or Federal Bureau of Investigation (FBI) field office or U.S. Attorneys' Office to file a complaint, assist in the investigation or prosecution of acts of severe forms of trafficking in persons, and request an LEA endorsement. If the applicant was recently liberated from the trafficking in persons situation, the applicant should ask the LEA for an endorsement. Alternatively, the applicant may contact the Department of Justice, Civil Rights Division, Trafficking in Persons and Worker Exploitation Task Force complaint hotline at 1–888–428–7581 to file a complaint and be referred to an LEA.

(g) *Physical presence on account of trafficking in persons.* The applicant must establish that he or she is physically present in the United States, American Samoa, or the Commonwealth of the Northern Mariana Islands, or at a port-of-entry thereto on account of such trafficking, and that he or she is a victim of a severe form of trafficking in persons that forms the basis for the application. Specifically, the physical presence requirement reaches an alien who: is present because he or she is being subjected to a severe form of trafficking in persons; was recently liberated from a severe form of trafficking in persons; or was subject to severe forms of trafficking in persons at some point in the past and whose continuing presence in the United States is directly related to the original trafficking in persons.

(1) *In general.* The evidence and statements included with the application must state the date and place (if known) and the manner and purpose (if known) for which the applicant entered the United States, American Samoa, or the Commonwealth of the Northern Mariana Islands, or a port-of-entry thereto, and demonstrate that the applicant is present now on account of the applicant's victimization as described in paragraph (f) of this section and section 101(a)(15)(T)(i)(I) of the Act.

(2) *Opportunity to depart.* If the alien has escaped the traffickers before law enforcement became involved in the matter, he or she must show that he or she did not have a clear chance to leave the United States in the interim. The Service will consider whether an applicant had a clear chance to leave in light of the individual applicant's circumstances. Information relevant to this determination may include, but is not limited to, circumstances attributable to the trafficking in persons situation, such as trauma, injury, lack of resources, or travel documents that have

been seized by the traffickers. This determination may reach both those who entered the United States lawfully and those who entered without being admitted or paroled. The Service will consider all evidence presented to determine the physical presence requirement, including asking the alien to answer questions on Form I–914, about when he or she escaped from the trafficker, what activities he or she has undertaken since that time, including the steps he or she may have taken to deal with the consequences of having been trafficked, and the applicant's ability to leave the United States.

(3) *Departure from the United States.* An alien who has voluntarily left (or has been removed from) the United States at any time after the act of a severe form of trafficking in persons shall be deemed not to be present in the United States as a result of such trafficking in persons unless the alien's reentry into the United States was the result of the continued victimization of the alien or a new incident of a severe form of trafficking in persons described in section 101(a)(15)(T)(i)(I) of the Act.

(h) *Compliance with reasonable requests from a law enforcement agency for assistance in the investigation or prosecution.* Except as provided in paragraph (h)(3) of this section, the applicant must submit evidence that fully establishes that he or she has complied with any reasonable request for assistance in the investigation or prosecution of acts of severe forms of trafficking in persons. As provided in paragraph (h)(3) of this section, if the victim of a severe form of trafficking in persons is under age 15, he or she is not required to comply with any reasonable request for assistance in order to be eligible for T nonimmigrant status, but may cooperate at his or her discretion.

(1) *Primary evidence of compliance with law enforcement requests.* An LEA endorsement describing the assistance provided by the applicant is not required evidence. However, if an LEA endorsement is provided as set forth in paragraph (f)(1) of this section, it will be considered primary evidence that the applicant has complied with any reasonable request in the investigation or prosecution of the severe form of trafficking in persons of which the applicant was a victim. If the Service has reason to believe that the applicant has not complied with any reasonable request for assistance by the endorsing LEA or other LEAs, the Service will contact the LEA and both the Service and the LEA will take all practical steps to reach a resolution acceptable to both agencies. The Service may, at its discretion, interview the alien regarding the evidence for and against the compliance, and allow the alien to submit additional evidence of such compliance. If the Service determines that the alien has not complied with any reasonable request for assistance, then the application will be denied, and any approved application based on the LEA endorsement will be revoked pursuant to this section.

(2) *Secondary evidence of compliance with law enforcement requests; Affidavits.* Credible secondary evidence and affidavits may be submitted to show the nonexistence or unavailability of the primary evidence and to otherwise establish the requirement that the applicant comply with any reasonable request for assistance in the investigation or prosecution of that severe form of trafficking in persons. The secondary evidence must include an original statement by the applicant that indicates the reason the LEA endorsement does not exist or is unavailable, and whether similar records documenting any assistance provided by the applicant are available. The statement or evidence must show that an LEA that has responsibility and authority for the detection, investigation, or prosecution of severe forms of trafficking in persons has information about such trafficking in persons, that the victim has complied with any reasonable request for assistance in the investigation or prosecution of such acts of trafficking, and, if the victim did not report the crime at the time, why the crime was not previously reported. The statement or evidence should demonstrate that good faith attempts were made to obtain the LEA endorsement, including what efforts the applicant undertook to accomplish these attempts. In addition, applicants may also submit their own affidavit and the affidavits of other witnesses. The determination of what evidence is credible and the weight to be given that evidence shall be within the sole discretion of the Service. Applicants are encouraged to describe and document all applicable factors, since there is no guarantee that a particular reason will result in a finding that the applicant has complied with reasonable requests. An applicant who never has had contact with an LEA regarding the acts of severe forms of trafficking in persons will not be eligible for T–1 nonimmigrant status.

(3) *Exception for applicants under the age of 15.* Applicants under the age of 15 are not required to demonstrate compliance with the requirement of any reasonable request for assistance in the investigation and prosecution of acts of severe forms of trafficking in persons. Applicants under the age of 15 must provide evidence of their age. Primary evidence that a victim of a severe form of trafficking in persons has not yet reached the age of 15 would be an official copy of the alien's birth certificate, a passport, or a certified medical opinion. Secondary evidence regarding the age of the applicant also may be submitted in accordance with § 103.2(b)(2)(i) of this chapter. An applicant under the age of 15 still must provide evidence demonstrating that he or she satisfies the other necessary requirements, including that he or she is the victim of a severe form of trafficking in persons and faces extreme hardship involving unusual and severe harm if removed from the United States.

(i) *Evidence of extreme hardship involving unusual and severe harm upon removal.* To be eligible for T–1 nonimmigrant status under section 101(a)(15)(T)(i) of the Act, an applicant must demonstrate that removal from the United States would subject the applicant to extreme hardship involving unusual and severe harm.

(1) *Standard.* Extreme hardship involving unusual and severe harm is a higher standard than that of extreme hardship as described in § 240.58 of this chapter. A finding of extreme hardship involving unusual and severe harm may not be based upon current or future economic detriment, or the lack of, or disruption to, social or economic opportunities. Factors that may be considered in evaluating whether removal would result in extreme hardship involving unusual and severe harm should take into account both traditional extreme hardship factors and those factors associated with having been a victim of a severe form of trafficking in persons. These factors include, but are not limited to, the following:

(i) The age and personal circumstances of the applicant;

(ii) Serious physical or mental illness of the applicant that necessitates medical or psychological attention not reasonably available in the foreign country;

(iii) The nature and extent of the physical and psychological consequences of severe forms of trafficking in persons;

(iv) The impact of the loss of access to the United States courts and the criminal justice system for purposes relating to the incident of severe forms of trafficking in persons or other crimes perpetrated against the applicant, including criminal and civil redress for acts of trafficking in persons, criminal prosecution, restitution, and protection;

(v) The reasonable expectation that the existence of laws, social practices, or customs in the foreign country to which the applicant would be returned would penalize the applicant severely for having been the victim of a severe form of trafficking in persons;

(vi) The likelihood of re-victimization and the need, ability, or willingness of foreign authorities to protect the applicant;

(vii) The likelihood that the trafficker in persons or others acting on behalf of the trafficker in the foreign country would severely harm the applicant; and

(viii) The likelihood that the applicant's individual safety would be seriously threatened by the existence of civil unrest or armed conflict as demonstrated by the designation of Temporary Protected Status, under section 244 of the Act, or the granting of other relevant protections.

(2) *Evidence.* An applicant is encouraged to describe and document all factors that may be relevant to his or her case, since there is no guarantee that a particular reason or reasons will result in a finding that removal would cause extreme hardship involving unusual and severe harm to the applicant. Hardship to persons other than the alien victim of a severe form of trafficking in persons cannot be considered in determining whether an applicant would suffer extreme hardship involving unusual and severe harm.

(3) *Evaluation.* The Service will evaluate on a case-by-case basis, after a review of the evidence, whether the applicant has demonstrated extreme hardship involving unusual or severe harm. The Service will consider all credible evidence submitted regarding the nature and scope of the hardship should the applicant be removed from the United States, including evidence of hardship arising from circumstances surrounding the victimization as described in section 101(a)(15)(T)(i)(I) of the Act and any other circumstances. In appropriate cases, the Service may consider evidence from relevant country condition reports and any other public or private sources of information. The determination that extreme hardship involving unusual or severe harm to the alien exists is to be made solely by the Service.

(j) *Waiver of grounds of inadmissibility.* An application for a waiver of inadmissibility under section 212(d)(13) or section 212(d)(3) of the Act must be filed in accordance with § 212.16 of this chapter, and submitted to the Service with the completed application package.

(k) *Bona fide application for T–1 nonimmigrant status.*—(1) Criteria. Once an application is submitted to the Service, the Service will conduct an initial review to determine if the application is a *bona fide* application for T nonimmigrant status. An application shall be determined to be *bona fide* if, after initial review, it is properly filed, there appears to be no instance of fraud in the application, the application is complete (including the LEA endorsement or other secondary evidence), the application presents *prima facie* evidence of each element to show eligibility for T–1 nonimmigrant status, and the Service has completed the necessary fingerprinting and criminal background checks. If an alien is inadmissible under section 212(a) of the Act, the application will not be deemed to be *bona fide* unless the only grounds of inadmissibility are those under the circumstances described in section 212(d)(13) of the Act, or unless the Service has granted a waiver of inadmissibility on any other grounds. All waivers are discretionary and require a request for a waiver. Under section 212(d)(13), an application can be *bona fide* before the waiver is granted. This is not the case under other grounds of inadmissibility.

(2) *Determination by the Service.* An application for T–1 status under this section will not be treated as a *bona fide* application until the Service has provided the notice described in paragraph (k)(3) of this section. In the event that an application is incomplete, the Service will request the additional information as provided in § 103.2(b)(8) of this chapter. If the application is complete, but does not present sufficient evidence to establish *prima facie* eligibility for each required element of T nonimmigrant status, the Service will adjudicate the application on the basis of the evidence presented, in accordance with the procedures of this section.

(3) *Notice to alien.* Once an application is determined to be a *bona fide* application for a T–1 nonimmigrant status, the Service will provide written confirmation to the applicant.

(4) *Stay of final order of exclusion, deportation, or removal.* A determination by the Service that an application for T–1 nonimmigrant status is *bona fide* automatically stays the execution of any final order of exclusion, deportation, or removal. This stay shall remain in effect until there is a final decision on the T application. The filing of an application for T nonimmigrant status does not stay the execution of a final order unless the Service has determined that the application is *bona fide*. Neither an immigration judge nor the Board of Immigration Appeals (Board) has jurisdiction to adjudicate an application for a stay of execution, deportation, or removal order, on the basis of the filing of an application for T nonimmigrant status.

(l) *Review and decision on applications.*—(1) *De novo review.* The Service shall conduct a de novo review of all evidence submitted and is not bound by its previous factual determinations as to any essential elements of the T nonimmigrant status application. Evidence previously submitted for this and other immigration benefits or relief may be used by the Service in evaluating the eligibility of an applicant for T nonimmigrant status. However, the Service will not be bound by its previous factual determinations as to any essential elements of the T classification. The Service will determine, in its sole discretion, the evidentiary value of previously or concurrently submitted evidence.

(2) *Burden of proof.* At all stages of the processing of an application for any benefits under T nonimmigrant status, the burden shall be on the applicant to present to the Service evidence that fully establishes eligibility for the desired benefit.

(3) *Decision.* After completing its review of the application, the Service shall issue a written decision granting or denying the application. If the Service determines that the applicant has met the requirements for T–1 nonimmigrant status, the Service shall grant the application, subject to the annual limitation as provided in paragraph (m) of this section. Along with the approval, the Service will include a list of nongovernmental organizations to which the applicant can refer regarding the alien's options while in the United States and resources available to the alien.

(4) *Work authorization.* When the Service grants an application for T–1 nonimmigrant status, the Service will provide the alien with an Employment Authorization Document incident to that status, which shall extend concurrently with the duration of the alien's T–1 nonimmigrant status.

(m) *Annual cap.* In accordance with section 214(n)(2) of the Act, the total number of principal aliens issued T–1 nonimmigrant status may not exceed 5,000 in any fiscal year.

(1) *Issuance of T–1 nonimmigrant status.* Once the cap is reached in any fiscal year, the Service will continue to review and consider applications in the order they are received. The Service will determine if the applicants are eligible for T–1 nonimmigrant status, but will

not issue T–1 nonimmigrant status at that time. The revocation of an alien's T–1 status will have no effect on the annual cap.

(2) *Waiting list.* All eligible applicants who, due solely to the cap, are not granted T–1 nonimmigrant status shall be placed on a waiting list and will receive notice of such placement. While on the waiting list, the applicant shall maintain his or her current means to prevent removal (deferred action, parole, or stay of removal) and any employment authorization, subject to any limits imposed on that authorization. Priority on the waiting list is determined by the date the application was properly filed, with the oldest applications receiving the highest priority. As new classifications become available in subsequent years, the Service will issue them to applicants on the waiting list, in the order in which the applications were properly filed, providing the applicant remains admissible. The Service may require new fingerprint and criminal history checks before issuing an approval. After T–1 nonimmigrant status has been issued to qualifying applicants on the waiting list, any remaining T–1 nonimmigrant numbers will be issued to new qualifying applicants in the order that the applications were properly filed.

(n) [Reserved]

(o) *Admission of the T–1 applicant's immediate family members.*—(1) *Eligibility.* Subject to section 214(n) of the Act, an alien who has applied for or been granted T–1 nonimmigrant status may apply for admission of an immediate family member, who is otherwise admissible to the United States, in a T–2 (spouse) or T–3 (child) derivative status (and, in the case of a T–1 principal applicant who is a child, a T–4 (parent) derivative status), if accompanying or following to join the principal alien. The applicant must submit evidence sufficient to demonstrate that:

(i) The alien for whom T–2, T–3, or T–4 status is being sought is an immediate family member of a T–1 nonimmigrant, as defined in paragraph (a) of this section, and is otherwise eligible for that status; and

(ii) The immediate family member or the T–1 principal would suffer extreme hardship, as described in paragraph (o)(5) of this section, if the immediate family member was not allowed to accompany or follow to join the principal T–1 nonimmigrant.

(2) *Filing procedures.* A T–1 principal may apply for T–2, T–3, or T–4 nonimmigrant status for an immediate family member by submitting Form I–914 and all necessary documentation by mail, including Supplement A, to the Service. The application for derivative T nonimmigrant status for eligible family members can be filed on the same application as the T–1 application, or in a separate application filed at a subsequent time.

(3) *Contents of the application package for an immediate family member.* In addition to Form I–914, an application for T–2, T–3, or T–4 nonimmigrant status must include the following:

(i) The proper fee for Form I–914 as provided in § 103.7(b)(1) of this chapter, or an application for a fee waiver as provided in § 103.7(c) of this chapter;

(ii) Three current photographs;

(iii) The fingerprint fee as provided in § 103.2(e) of this chapter for each immediate family member;

(iv) Evidence demonstrating the relationship of an immediate family member, as provided in paragraph (o)(4) of this section; and

(v) Evidence demonstrating extreme hardship as provided in paragraph (o)(5) of this section.

(4) *Relationship.* The relationship must exist at the time the application for the T–1 nonimmigrant status was filed, and must continue to exist at the time of the application for T–2, T–3, or T–4 status and at the time of the immediate family member's subsequent admission to the United States. If the T–1 principal alien proves that he or she became the parent of a child after the T–1 nonimmigrant status was filed, the child shall be eligible to accompany or follow to join the T–1 principal.

(5) *Evidence demonstrating extreme hardship for immediate family members.* The application must demonstrate that each alien for whom T–2, T–3, or T–4 status is being sought, or the principal T–1 applicant, would suffer extreme hardship if the immediate family member was not admitted to the United States or was removed from the United States (if already present). When the immediate family members are following to join the principal, the extreme hardship must be substantially different than the hardship generally experienced by other residents of their country of origin who are not victims of a severe form of trafficking in persons. The Service will consider all credible evidence of extreme hardship to the T–1 recipient or the individual immediate family members. The determination of the extreme hardship claim will be evaluated on a case-by-case basis, in accordance with the factors outlined in § 240.58 of this chapter. Applicants are encouraged to raise and document all applicable factors, since there is no guarantee that a particular reason or reasons will result in a finding of extreme hardship if the applicant is not allowed to enter or remain in the United States. In addition to these factors, other factors that may be considered in evaluating extreme hardship include, but are not limited to, the following:

(i) The need to provide financial support to the principal alien;

(ii) The need for family support for a principal alien; or

(iii) The risk of serious harm, particularly bodily harm, to an immediate family member from the perpetrators of the severe forms of trafficking in persons.

(6) *Fingerprinting; interviews.* The provisions for fingerprinting and interviews in paragraphs (c)(5) through (c)(7) of this section also are applicable to applications for immediate family members.

(7) *Admissibility.* If an alien is inadmissible, an application for a waiver of inadmissibility under section 212(d)(13) or section 212(d)(3) of the Act must be filed in accordance with § 212.16 of this chapter, and submitted to the Service with the completed application package.

(8) *Review and decision.* After reviewing the application under the standards of paragraph (l) of this section, the Service shall issue a written decision granting or denying the application for T–2, T–3, or T–4 status.

(9) *Derivative grants.* Individuals who are granted T–2, T–3, or T–4 nonimmigrant status are not subject to an annual cap. Applications for T–2, T–3, or T–4 nonimmigrant status will not be granted until a T–1 status has been issued to the related principal alien.

(10) *Employment authorization.* An alien granted T–2, T–3, or T–4 nonimmigrant status may apply for employment authorization by filing Form I–765, *Application for Employment Authorization,* with the appropriate fee or an application for fee waiver, in accordance with the instructions on, or attached to, that form. For derivatives in the United States, the Form I–765 may be filed concurrently with the filing of the application for T–2, T–3, or T–4 status or at any time thereafter. If the application for employment authorization is approved, the T–2, T–3, or T–4 alien will be granted employment authorization pursuant to § 274a.12(c)(25) of this chapter. Employment authorization will last for the length of the duration of the T–1 nonimmigrant status.

(11) *Aliens outside the United States.* When the Service approves an

application for a qualifying immediate family member who is outside the United States, the Service will notify the T–1 principal alien of such approval on Form I–797, *Notice of Action.* Form I–914, Supplement A, *Supplemental Application for Immediate Family Members of T–1 Recipient,* must be forwarded to the Department of State for delivery to the American Embassy or Consulate having jurisdiction over the area in which the T–1 recipient's qualifying immediate family member is located. The supplemental form may be used by a consular officer in determining the alien's eligibility for a T–2, T–3, or T–4 visa, as appropriate.

(p) *Duration of T nonimmigrant status.*—(1) *In general.* An approved T nonimmigrant status shall expire after 3 years from the date of approval. The status is not renewable. At the time an alien is approved for T nonimmigrant status, the Service shall notify the alien that his or her nonimmigrant status will expire in 3 years from the date of the approval of the alien's Form I–914. The applicant shall immediately notify the Service of any changes in the applicant's circumstances that may affect eligibility under section 101(a)(15)(T)(i) of the Act and this section.

(2) *Information pertaining to adjustment of status.* The Service shall further notify the alien of the requirement that the T alien apply for adjustment of status within the 90 days immediately preceding the third anniversary of the alien's having been approved such nonimmigrant status, and that the failure to apply for adjustment of status as set forth in section 245(l) of the Act will result in termination of the alien's T nonimmigrant status in the United States at the end of the 3-year period. If the alien properly files for adjustment of status to that of a person admitted for permanent residence within the 90-day period immediately preceding the third anniversary of the date of the approval of the alien's Form I–914, the alien shall continue to be in a T nonimmigrant status with all the rights, privileges, and responsibilities, including employment authorization, provided to a person possessing such status until such time as a final decision is rendered on the alien's application for adjustment of status.

(q) *De novo review.* The Service shall conduct a *de novo* review of all evidence submitted at all stages in the adjudication of an application for T nonimmigrant status. Evidence previously submitted for this and other immigration benefits or relief may be used by the Service in evaluating the eligibility of an applicant for T nonimmigrant status. However, the Service will not be bound by its previous factual determinations as to any essential elements of the T classification. The Service will determine, in its sole discretion, the evidentiary value of previously or concurrently submitted evidence.

(r) *Denial of application.* Upon denial of any T application, the Service shall notify the applicant, any LEA providing an LEA endorsement, and the Department of Health and Human Service's Office of Refugee Resettlement in writing of the decision and the reasons for the denial in accordance with § 103.3 of this chapter. Upon denial of an application for T nonimmigrant status, any benefits derived as a result of having filed a *bona fide* application will automatically be revoked when the denial becomes final. If an applicant chooses to appeal the denial pursuant to the provisions of § 103.3 of this chapter, the denial will not become final until the appeal is adjudicated.

(s) *Revocation of approved T nonimmigrant status.* The alien shall immediately notify the Service of any changes in the terms and conditions of an alien's circumstances that may affect eligibility under section 101(a)(15)(T) of the Act and this section.

(1) *Grounds for notice of intent to revoke.* The Service shall send to the T nonimmigrant a notice of intent to revoke the status in relevant part if it is determined that:

(i) The T nonimmigrant violated the requirements of section 101(a)(15)(T) of the Act or this section;

(ii) The approval of the application violated this section or involved error in preparation procedure or adjudication that affects the outcome;

(iii) In the case of a T–2 spouse, the alien's divorce from the T–1 principal alien has become final;

(iv) In the case of a T–1 principal alien, an LEA with jurisdiction to detect or investigate the acts of severe forms of trafficking in persons by which the alien was victimized notifies the Service that the alien has unreasonably refused to cooperate with the investigation or prosecution of the trafficking in persons and provides the Service with a detailed explanation of its assertions in writing; or

(v) The LEA providing the LEA endorsement withdraws its endorsement or disavows the statements made therein and notifies the Service with a detailed explanation of its assertions in writing.

(2) *Notice of intent to revoke and consideration of evidence.* A district director may revoke the approval of a T nonimmigrant status at any time, even after the validity of the status has expired. The notice of intent to revoke shall be in writing and shall contain a detailed statement of the grounds for the revocation and the time period allowed for the T nonimmigrant's rebuttal. The alien may submit evidence in rebuttal within 30 days of the date of the notice. The director shall consider all relevant evidence presented in deciding whether to revoke approval of the T nonimmigrant status. The determination of what is relevant evidence and the weight to be given to that evidence shall be within the sole discretion of the director.

(3) *Revocation of T nonimmigrant status.* If, upon reconsideration, the approval previously granted is revoked, the director shall provide the alien with a written notification of the decision that explains the specific reasons for the revocation. The director also shall notify the LEA that supplied an endorsement to the alien, any consular officer having jurisdiction over the applicant, and HHS's Office of Refugee Resettlement.

(4) *Appeal of a revocation of approval.* The alien may appeal the decision to revoke the approval within 15 days after the service of notice of the revocation. All appeals of a revocation of approval will be processed and adjudicated in accordance with § 103.3 of this chapter.

(5) *Effect of revocation of T–1 status.* In the event that a principal alien's T–1 nonimmigrant status is revoked, all T nonimmigrant status holders deriving status from the revoked status automatically shall have that status revoked. In the case where a T–2, T–3, or T–4 application is still awaiting adjudication, it shall be denied. The revocation of an alien's T–1 status will have no effect on the annual cap as described in paragraph (m) of this section.

(t) *Removal proceedings without revocation.* Nothing in this section shall prohibit the Service from instituting removal proceedings under section 240 of the Act for conduct committed after admission, or for conduct or a condition that was not disclosed to the Service prior to the granting of nonimmigrant status under section 101(a)(15)(T) of the Act, including the misrepresentation of material facts in the applicant's application for T nonimmigrant status.

(u) [Reserved]

(v) *Service officer referral.* Any Service officer who receives a request from an alien seeking protection as a victim of a severe form of trafficking in persons or seeking information regarding T nonimmigrant status shall

follow the procedures for protecting and providing services to victims of severe forms of trafficking outlined in 28 CFR 1100.31. Aliens believed to be victims of a severe form of trafficking in persons shall be referred to the local Service office with responsibility for investigations relating to victims of severe forms of trafficking in persons for a consultation within 7 days. The local Service office may, in turn, refer the victim to another LEA with responsibility for investigating or prosecuting severe forms of trafficking in persons. If the alien has a credible claim to victimization, he or she will be given the opportunity to submit an application for T status pursuant to section 101(a)(15)(T) of the Act and any other benefit or protection for which he or she may be eligible. An alien determined not to have a credible claim to being a victim of a severe form of trafficking in persons and who is subject to removal will be removed in accordance with Service policy.

PART 274a—CONTROL OF EMPLOYMENT OF ALIENS

10. The authority citation for section 274a continues to read as follows:

Authority: 8 U.S.C. 1101, 1103, 1324a; 8 CFR part 2.

11. Section 274a.12 is amended by:

a. Revising the reference citation to ''(a)(15)'' to read ''(a)(16)'' in the second sentence in paragraph (a) introductory text;

b. Adding a new paragraph (a)(16); and by

c. Adding a new paragraph (c)(25), to read as follows:

§ 274a.12 Classes of aliens authorized to accept employment.

(a) * * *

(16) An alien authorized to be admitted to or remain in the United States as a nonimmigrant alien victim of a severe form of trafficking in persons under section 101(a)(15)(T)(i) of the Act. Employment authorization granted under this paragraph shall expire upon the expiration of the underlying T–1 nonimmigrant status granted by the Service.

* * * * *

(c) * * *

(25) An immediate family member of a T–1 victim of a severe form of trafficking in persons designated as a T–2, T–3 or T–4 nonimmigrant pursuant to § 214.11 of this chapter. Aliens in this status shall only be authorized to work for the duration of their T nonimmigrant status.

* * * * *

PART 299—IMMIGRATION FORMS

12. The authority citation for part 299 continues to read as follows:

Authority: 8 U.S.C. 1101, 1103; 8 CFR part 2.

13. Section 299.1 is amended by adding Form ''I–914'' to the table, in the proper alpha/numeric sequence; to read as follows:

§ 299.1 Prescribed forms.

* * * * *

Form No.	Edition date	Title
I–914	1–22–02	Application for T Nonimmigrant Status.
*	*	*

14. Section 299.5 is amended in the table by adding Form ''I–914'' to the table, in proper alpha/numeric sequence, to read as follows:

§ 299.5 Display of control numbers.

* * * * *

INS form No.	INS form title	Currently assigned OMB control No.
I–914	Application for T Nonimmigrant Status.	1115–0246
*	*	*

Dated: January 24, 2002.

John Ashcroft,

Attorney General.

Note: Form I–914 is published for informational purposes only and will not be codified in Title 8 of the Code of Federal Regulations.

BILLING CODE 4410–10–P

U.S. Department of Justice
Immigration and Naturalization Service

OMB No. 1115-0246; Expires 05/31/02

Application for T Nonimmigrant Status

(Filing Instructions for Application for T Nonimmigrant Status (Form I-914); Application for Immediate Family Member of T-1 Recipient (Form I-914, Supplement A); and Declaration of Law Enforcement Officer for Victim of Trafficking in Persons (Form I-914, Supplement B).

Index

Sections	Page No.
1. Purpose	1
2. General Filing Instructions	1
3. Required Documentation for Each Application	2
4. Completing Each Application	3
5. Fee	6
6. Where to File	6
7. Certification Instructions	6
8. Other Information	6

Section 1. Purpose

Form I-914, Application for T Nonimmigrant

The purpose of the Form I-914 is to provide temporary immigration benefits to aliens who are victims of severe forms of trafficking in persons, and to their immediate family members, as appropriate. Form I-914 shall be filed initially by the victims themselves, who may also include eligible family members on their application at that time. The form may also be filed to petition for eligible family members whom the victim did not include in the original application, but for whom the victim subsequently wishes to file.

Form I-914, Supplement A, Application for Immediate Family Member of T-1 Recipient

The purpose of the Form I-914, Supplement A, is to allow principal T nonimmigrant status holders and applicants to apply for derivative benefits for their immediate family members. The Principal Applicant shall complete and file one Form I-914, Supplement A, for each family member for whom the Principal Applicant is now seeking derivative status.

An alien granted **T-2, T-3,** or **T-4** nonimmigrant status may apply for employment authorization by filing an Application for Employment Authorization (Form I-765), with the appropriate fee or an application for fee waiver.

The Form I-765 may be filed concurrently with the filing of the application for **T-2, T-3,** or **T-4** status, or at any time thereafter.

If employment authorization is approved, the **T-2, T-3,** or **T-4** alien will be given an eligibility classification of **C25** in accordance with section 274a.12(c)(25). Employment authorization will last for the length of the duration of the T nonimmigrant status (3 years maximum).

The validity period of the initial EAD will be for twelve (12) months. Extensions may be granted in twelve-month increments, up to the expiration date of the T nonimmigrant status (3 years maximum).

Note: An Employment Authorization Document (EAD) cannot be issued to an alien (derivative family member) that is presently residing outside the United States. The principal alien will be notified of this fact.

Form I-914, Supplement B, Declaration of Law Enforcement Officer for Victim of Trafficking in Persons

The Form I-914, Supplement B, is used by Federal Law Enforcement Officers to certify that the applicant is a victim of a severe form of trafficking in persons.

Section 2. General Filing Instructions

As a result of situations leading to your filing of this application, you may not feel secure receiving correspondence regarding this application at the address where you live. The Safe Mailing Address may, but need not be, the mailing address for the place where you live. It may be a post office box, the address of a friend, a community based organization that is helping you, your attorney, or any other address at which you can receive correspondence safely and punctually.

How to File

Form I-914

In addition to the Form I-914 application and the requisite evidence in support of the applicant's claim, as described in Section 3 below, a complete application package shall include the filing fee and three identical photographs of the applicant.

The photographs must have been taken within six months of filing the application, and be unmounted and unretouched. The photographs shall be three-quarter views of the right side of the applicant's face, showing the applicant's entire face, including the right ear and left eye. The photographs shall be 1 1/2 X 1 1/2 inches. The applicant's head shall not make up less than 3/4 of the photographs. The background must be consistent and light in color. The applicant's name and A#, if known, shall be lightly printed on the back of each photograph with a pencil.

A principal or derivative applicant who is or becomes inadmissible under section 212(a) of the Immigration and Nationality Act (the Act) will not be eligible for T nonimmigrant status unless the ground of inadmissibility is waived by the Service. If the ground of inadmissibility is one that can be waived, the alien should apply for a waiver of the grounds of inadmissibility from the Service on Form I-192, Application for Advance Permission to Enter as Nonimmigrant (Pursuant to Section 212(d)(3) of the Immigration and Nationality Act). Section 212(d)(3)(B) provides general authority for the Service to waive many grounds of inadmissibility for nonimmigrants. These waivers are not automatic, but may be granted in the exercise of discretion. Form I-192 should be filed at the time of filing Form I-914.

Form I-914, Supplement A

If, in addition to the Form I-914, the applicant also files one or more Forms I-914, Supplement A, Application for Immediate Family Member of T-1 Recipient, each must be accompanied by all of the appropriate documentation and evidence, the appropriate fees, and three photographs of the Derivative Applicant. The photographs of the derivative must comply with the same requirements as the photographs of the Principal Applicant, described above. If you are requesting employment authorization for the Derivative Applicant, a Form I-765, Application for Employment Authorization, must also accompany the Form I-914, Supplement A.

A Form I-914, Supplement A, Application for Immediate Family Member of T-1 Recipient, may be filed concurrently with the initial application of the Principal Applicant, or at any time thereafter. Any Form I-914, Supplement A, submitted subsequently to the Principal Applicant's initial filing, however, must be accompanied by a new Form I-914 with the appropriate boxes checked in Part A, and **original signature**, with the appropriate fee. Evidence supporting the original application, however, is not required to be resubmitted with the new Form I-914. No Form I-914, Supplement A, will be accepted without a copy of the original Form I-914.

Fingerprinting and Interview Appointments

All applicants between the ages of 14 and 79 inclusive must be fingerprinted to facilitate a criminal background check. In addition, the Immigration and Naturalization Service (Service) may require the applicant to appear for a personal interview. The applicant will be notified of the proper time and location to appear for an interview, if the Service so requires, and for fingerprinting. Failure to appear for a scheduled interview without prior authorization, or failure to comply with fingerprint processing requirements, may result in denial of the application.

Section 3. Required Documentation for Each Application

Evidence

Form I-914

Application must be filed with evidence sufficient to demonstrate that each of the eligibility requirements is satisfied.

Principal Applicant for T Nonimmigrant (T-1) Status:

To qualify for T-1 nonimmigrant status, an applicant must demonstrate that he or she:

- Is physically present in the United States, American Samoa or the Commonwealth of the Northern Mariana Islands as a result of trafficking;
- Is a victim of a severe form of trafficking in persons;
- Would suffer extreme hardship involving unusual and severe harm upon removal; and
- Has complied with any reasonable request for assistance in the investigation and prosecution of acts of trafficking in persons, unless the applicant is less than 15 years old.

To establish that he or she is a victim of a severe form of trafficking in persons, the applicant must demonstrate that he or she was brought to the United States either:

(1) For the purpose of a commercial sex act, which act was either induced by force, fraud or coercion, or occurred when the applicant had not reached 18 years of age, or

(2) For the purpose of labor or services induced by force, fraud, or coercion for the purpose of subjecting the applicant to involuntary servitude, peonage, debt bondage, or slavery.

An applicant is encouraged to raise all arguments and to document all elements of his or her claim, including allegations of extreme hardship, in his or her initial application.

Form I-914, Supplement A

The Form I-914, Supplement A, must be filed with evidence sufficient to demonstrate that each of the eligibility requirements is satisfied.

Qualifications for T Derivative Applicants for Nonimmigrant Status

An applicant for T derivative status must be:

- The spouse or child of the T nonimmigrant principal applicant or the T nonimmigrant status holder, if the principal applicant or status holder is over the age of 21;

- The spouse, child or parent, if the principal applicant or status holder is under the age of 21.

Applicants for derivative status, as family members of an applicant for T-1 nonimmigrant status, or of a person granted T-1 nonimmigrant status, must submit credible documentary evidence of the relationship of the Derivative Applicant to the Principal Applicant. Documents that will be considered for this purpose are described below. If the Principal Applicant is over the age of 21, the Derivative Applicant must be the spouse or child of the Principal Applicant. If the Principal Applicant is under the age of 21, the Derivative Applicant may be the spouse, child, or parent of the Principal Applicant. If the Derivative Applicant is applying as the child of the Principal Applicant, the evidence must also establish that the Derivative Applicant is under the age of 21.

In addition, applicants for derivative status must submit evidence to demonstrate that either the principal or the Derivative Applicant will suffer extreme hardship if the Derivative Applicant is not permitted to join the Principal Applicant. An applicant is encouraged to raise all arguments and to document all elements of his or her claim, including allegations of extreme hardship, in his or her initial application.

Form I-914, Supplement B (Declaration of Law Enforcement Officer for Victim of Trafficking in Persons)

The primary evidence of an applicant's claim to be a victim of trafficking shall be a Form I-914, Supplement B, Declaration of Law Enforcement Officer for Victim of Trafficking in Persons. That certification is appended to this form. An applicant for T-1 nonimmigrant status need not necessarily file a Form I-914, Supplement B, to prove the claim. However, the endorsement of a Federal Law Enforcement Officer on the Form I-914, Supplement B, constitutes presumptive proof that the applicant is a victim and has complied with any reasonable request for assistance in the investigation and prosecution. These elements of the applicant's claim may be difficult to establish otherwise, and submission of the Form I-914, Supplement B, is strongly advised. Instructions pertinent to the Form I-914, Supplement B, follow.

If you do not provide a completed Form I-914, Supplement B, however, you must submit an explanation, describing your attempts to obtain the certification and why your request was refused. If you did not attempt to obtain the certification, you must explain why you did not.

Secondary Evidence

If you do not provide a completed Form I-914, Supplement B, Declaration of Law Enforcement Officer for Victim of Trafficking in Persons, in addition to the explanation described above, you must also submit credible secondary evidence to establish your eligibility. Such evidence may include, but is not limited to, police reports, newspaper articles, witness affidavits, or any other form of evidence. Even if you do provide a Form I-914, Supplement B, you may submit additional evidence.

Whether or not you provide a Form I-914, Supplement B, you must provide a personal narrative statement. That statement should describe the trafficking crime of which you were a victim, including:

- How you were induced to enter the United States;
- The purpose for which you were brought to the United States;
- When these events took place;
- Who was responsible;
- How long were you detained by the traffickers;
- How and when you escaped, were rescued, or otherwise became separated from the traffickers;
- What you have been doing since you were separated from the traffickers;
- Why you were unable to leave the United States after you were separated from the traffickers;
- What harm or mistreatment you fear if you are removed from the United States; and
- Why you fear you would be harmed or mistreated.

Attach documents to support your claim. The evidence submitted in support of the application must credibly establish each element of your claim. If you have in your possession, or have access to, a document showing how you entered the United States, you must submit a copy of that document with your application.

Section 4. Completing Each Application

Form I-914

Provide the specific information requested about you and your family. Answer ALL of the questions asked. If any question does not apply to you or you do not know the answer, reply "none," "N/A" (for not applicable), or "unknown," as appropriate. Provide detailed information. Answer the questions as completely as possible. You are strongly encouraged to attach additional written statements and documents that support your claim.

Part A. Purpose for Filing the Application

As was explained above, this form shall be used both for the initial application of a victim of trafficking in persons, and to file subsequently for eligible family members. In this section, you are asked to describe, by checking one or more boxes, your purpose in filing this form.

Part B. General Information about the Applicant

Provide the requested information about yourself.

Part C. Details Related to Nonimmigrant Status

The applicant must answer each question. The Principal Applicant must provide evidence to document that he or she:

(1) Is a victim of a severe form of trafficking in persons;

(2) Is present in the United States, American Samoa, or the Commonwealth of the Northern Mariana Islands, or at a port-of-entry thereto, on account of such trafficking;

(3) Has complied with any reasonable request for assistance in the investigation or prosecution of acts of trafficking (or is not yet 15 years old); and

(4) Would suffer extreme harship involving unusual and severe harm upon removal.

The applicant must explain each of those elements of the claim in detail, and provide evidence of each of those elements of the claim. The evidence must be attached to the application when it is submitted. Failure to demonstrate eligibility credibly will result in denial of the application.

Part D. Processing Information

Answer each of the questions. If you answer "Yes" to any of the questions, you must explain your answer on a separate piece of paper. Label that sheet Form I-914, Part D, reference the number of the question which requires explanation, and attach that sheet to your application. Answering "Yes" does not necessarily mean that your application will be denied.

Part E. Information about Your Family Members

Provide the requested information about each of your family members for whom you now wish to seek immigration benefits. You may also file for a family member at a later date, rather than on your initial application. You must file one Form I-914, Supplement A, Application for Immediate Family Member of T-1 Recipient, with this application for each family member for whom you are now applying.

Part F. Attestation and Release

By signing this form, you declare, under penalty of perjury, that the statements made on the application, and the evidence submitted with it, are true and correct.

By signing this form, you also agree that the Service may release information from the record in order to investigate your claim to determine your eligibility to investigate fraudulent claims, and to assist in the investigation of trafficking in persons and related crimes. The Service requires that you sign the attestation and release so that the Service may investigate your claim to eligibility.

Part G. Preparer and/or Translator Certification

If anyone assisted you in preparing this form, translated the questions to you, or translated your responses to the questions, they must sign this certification, declaring, under penalty of perjury, that they asisted you, and that, to the best of their knowledge, the information on the form is truthful.

Form I-914, Supplement A

Provide the specific information requested about you and your family. Answer ALL of the questions asked. If any question does not apply to you or you do not know the answer, reply "none," "N/A" (for not applicable), or "unknown," as appropriate. Provide detailed information. Answer the questions as completely as possible. You are strongly encouraged to attach additional written statements and documents that support your claim.

Part A. Relationship

State the relationship of the Derivative Applicant family member to you. You must also include documentation of the claimed relationship. Documents acceptable for this purpose are listed below.

If you are filing for your:

- **Husband or wife,** give the Service a copy of your marriage certificate.
- **Child, and you are the mother,** give the child's birth certificate showing your name and the name of your child.
- **Child, and you are the father or stepparent,** give the child's birth certificate, showing both parents' names, and your marriage certificate. Child born out of wedlock and you are the father, give proof that a parent/child relationship exists or existed. For example, the child's birth certificate showing your name and evidence that you have financially supported the child. (A blood test may be necessary.)

- **Mother,** give your birth certificate showing your name and the name of your mother.
- **Father,** give your birth certificate showing your names of both parents, and your parents' marriage certificate.
- **Stepparent,** give your birth certificate showing the name of both natural parents, and the marriage certificate of your parent to your stepparent.
- **Adoptive parent or adopoted child,** give a certified copy of the adoption decree, the legal custody decree if you obtained custody before adoption, and a statement showing the dates and places you have lived together with the adopted parent or child.

In addition, in any case in which a marriage license is required, if either the husband or wife was married before, you must submit documents to show that all previous marriages were legally ended (for example, a divorce decree or death certificate). In cases where the names shown on the supporting documents have changed, give the Service legal documents to show how the name change occurred (for example, a marriage certificate, adoption decree, court order, etc.).

If a required document is unavailable, you may give the Service the following instead. (The Service may require a statement from the appropriate civil authority certifying that the necessary document is unavailable.)

- **Church record:** A certificate under the seal of the church where the baptism, dedication, or comparable rite occurred within two months after birth, showing the date and place of child's birth, date of the religious ceremony, and the names of the child's parents.
- **School record:** A letter from the authorities of the school attended (preferably the first school), showing the date of admission to the school, child's date and place of birth, and the names and birthplaces of both parents, if shown in the school records.
- **Census record:** State or Federal census record showing the names, place of birth, and date of birth or age of the person listed.
- **Affidavits:** Written statements sworn to or affirmed by two persons who were living at the time and who have personal knowledge of the event you are trying to prove; for example, the date and place of birth, marriage, divorce, or death. The persons making the affidavits need not be citizens of the United States. Each affidavit should contain the following information: (1) the relationship, if any, of the affiant to you; (2) full information concerning the event; and (3) complete details concerning how the person acquired knowledge of the event.

Part B. Information about Primary Applicant

Provide the requested information about yourself.

Part C. Information about Derivative Applicant

Provide the requested information about the family member for whom you are applying. Answer each question fully. If necessary, attach additional sheets to completely address the question. Label those sheets "Form I-914, Supplement A, Part C." and reference the questions that require additional explanation.

Part D. Processing Information

Answer each of the questions. If you answer "Yes" to any of the questions, you must explain your answer on a separate sheet of paper. Label that sheet Form I-914, Supplement A, Part D, reference the number of the question that requires additional explanation, and attach the sheet to the application. Answering "Yes" does not necessarily mean that benefits will be denied.

Part E. Attestation and Release

By signing this application, you declare, under penalty of perjury, that the statements made on the application, and the evidence submitted with it, are true and correct. The derivative applicant must also sign, also under the penalty of perjury, if he or she is in the United States.

By signing this application, you also agree that the Service may release information from the record in order to investigate your claim, to determine your eligibility, to assist in the investigation and prosecution of trafficking and related crimes, and to investigate and prosecute false claims. The Service requires that you sign the attestation and release.

Part F. Preparer and/or Translator Certification

If anyone assisted you in preparing this application, translated the questions to you, or translated your responses to the questions, they must sign this certification, declaring, under penalty of perjury, that they assisted you, and that, to the best of their knowledge, that the information on the application is truthful.

Part G. Application Checklist

Please verify that you have complied with each item on this checklist. Be sure that you have complied with all Service requirements pertinent to this form. The Service is not obliged to return your form to you if it is incomplete, is unaccompanied by supporting evidence or the correct fee, or is otherwise

unacceptable. In addition, failure to answer any question on the form, or failure to comply with any other Service requirement, may result in a processing delay, or in denial of the application.

Section 5. Fee

Form I-914

The fee for this application is a base fee of $200, to a maximum amount of $400, plus:

- $50 for each immediate family member filed concurrently on the same application, to a maximum amount payable per application of $400.
- $25 fingerprint charge for each applicant between the ages of 14 and 79.

Pay the fee in the exact amount. Checks and money orders must be payable in U.S. currency. Make check or money order payable to "Immigration and Naturalization Service." If you live in Guam, make your check or money order payable to "Treasurer, Guam." If you live in the U.S. Virgin Islands, make your check or money order payable to "Commissioner of Finance of the Virgin Islands." A charge of $30 will be imposed if a check in payment of a fee is not honored by the bank on which it is drawn. Please do not send cash in the mail.

Section 6. Where to File

An applicant for status as a T nonimmigrant shall submit a complete application package, by mail, to the **USINS, Vermont Service Center, 75 Lower Weldon Street, St. Albans, VT 05479-0001.**

Section 7. Certification Instructions (Form I-914, Supplement B)

Form I-914, Supplement B, is to be completed by Federal Law Enforcement Officers for victims under the Victims of Trafficking and Violence Protection Act, Public Law 106-386. The law enforcement officer must complete the form based upon his or her knowledge of the case, including evidence developed by other law enforcement officers investigating the case.

In order to be granted immigration benefits, the applicant must demonstrate that he or she is present in the United States as a result of being a victim of a severe form of trafficking in persons. Unless the applicant is less than 15 years of age, the applicant must also demonstrate that he or she is cooperating with law enforcement in the investigation and prosecution of the trafficking crime of which he or she was a victim. These elements may be established without submitting a Form I-914, Supplement B, but submission of the Supplement B, is strongly advised.

The Form I-914 applicant may detach Form I-914, Supplement B, and submit it to a Federal law enforcement officer familiar with the case in which he or she was a victim of a severe form of trafficking in persons. After the officer has completed the form, submit it with your application package.

Section 8. Other Information

Confidentiality

Information provided in the application package is confidential. It will be used to determine eligibility, to investigate the fraudulent claims, to enforce penalties for false statements, to assist in the investigation and prosecution of trafficking and related crimes, but for no other purpose. The information provided is subject to verification by the Service. However, the Service will release the information only as necessary to the stated purposes.

Penalties for Perjury

All statements contained in response to questions in this application are declared to be true and correct under penalty of perjury. Title 18, United States Code, Section 1546, provides in part:

> . . . Whoever knowingly makes under oath, or as permitted under penalty of perjury under 1746 of Title 28, United States Code, knowingly subscribes as true, any false statement with respect to a material fact in any application, affidavit, or other document required by the immigration laws or regulations prescribed thereunder, or knowingly presents any such application, affidavit, or other document containing any such false statement shall be fined in accordance with this title or imprisoned not more than five years, or both.

The knowing placement of false information on this application may subject you and/or the preparer of this application to criminal penalties under Title 18 of the United States Code. The knowing placement of false information on this application may also subject you and/or the preparer to civil penalties under Section 274C of the Immigration and Nationality Act (INA), 8 U.S.C. 1324c. Under 8 U.S.C. 1324c, a person subject to a final order for civil document fraud is deportable from the United States and may be subject to fines.

Authority for Collecting this Information

The authority to require you to file Form I-914, Application for T Nonimmigrant Status, when applying for employment authorization is found in Public Law 106-386, Victims of Trafficking and Violence Protection Act. Information you provide on your Form I-914 is used to investigate the veracity of your claim. The information may form the basis for granting the benefit sought, or may form the basis for an investigation of a fraudulent claim. The information may also be provided to law enforcement agencies or prosecutors investigating or prosecuting crimes of trafficking or related crimes.

Failure to provide all information as requested may result in the denial or rejection of this application. The information you provide may also be disclosed to other federal, state, local and foreign law enforcement and regulatory agencies during the course of the INS investigations.

Paperwork Reduction Act

An agency may not conduct or sponsor an information collection and a person is not required to respond to a collection of information unless it displays a currently valid OMB control number. The Immigration and Naturalization Service (INS) tries to create forms and instructions which are accurate and easily understood. Often this is difficult because immigration law can be very complex. The public reporting burden for this form is estimated to average three (3) hours and twenty-five (25) minutes per response, including the time for reviewing instructions, gathering and maintaining the data needed, and completing and reviewing the collection of information. The INS welcomes your comments regarding this burden estimate or any other aspect of this form, including suggestions for reducing this burden to Immigration and Naturalization Service, HQPDI, 425 I Street, N.W., Room 4034, Washington, DC 20536; OMB No. 1115-0246. **DO NOT MAIL YOUR COMPLETED APPLICATION TO THIS ADDRESS.**

U.S. Department of Justice
Immigration and Naturalization Service

OMB No. 1115-0246; Expires 05/31/02

Application for T Nonimmigrant Status

START HERE - Please Type or Print. ***Use black ink. See Instructions for information about eligibility and how to complete and file this application.***

FOR INS USE ONLY

Bar Code

Date Stamp

Remarks

Bona Fide Application

Initials ____ Stamp # ____ Date ____

Conditional Approval

Initials ____ Stamp # ____ Date ____

Action Block

PART A. Purpose for Filing the Application

Check all that apply:

- ☐ I am filing an application for T-1 nonimmigrant status, and have not previously filed for such status.
- ☐ I have a T-1 application pending.
- ☐ I have received T-1 status.
- ☐ I am applying to bring family member(s) to the United States.

PART B. General Information About Applicant

Family Name	Given Name	Middle Name

Other Names Used *(If any)? (Include maiden name and aliases)*

Residence in the U.S. (Street Number and Name)	Apt. No.	Home Phone ( )
City	State	ZIP Code
SAFE Mailing Address in the U.S., if other than above.	Apt. No.	Daytime Phone ( )
City	State	ZIP Code

Sex ☐ Male ☐ Female

Marital Status ☐ Single ☐ Married ☐ Divorced ☐ Widowed

A# *(If any)*	Social Security # *(If any)*	Date of Birth *(MM/DD/YYYY)*
Country of Birth		Country of Citizenship
Passport #	Issue Date *(MM/DD/YYYY)*	Place of Issuance
I-94 #		Date of Last Entry into U.S.
Place of Last Entry into U.S.		Current INS Status

PART C. Details Related to T Nonimmigrant Status

When answering the following questions about your claim you should explain relevant information. You should ***attach documents in support of your claim that you are a victim of a severe form of trafficking in persons*** *and the specific facts on which you are relying to support your claim. If only applying for T derivative status subsequent to the Principal Applicant's initial filing, evidence supporting the original application is not required to be resubmitted with the new Form I-914. (Attach additional sheets of paper as needed, labeling them as Part C and the question number. Refer to Instructions for further information.) Check either Yes or No, as appropriate.*

1. I **am** a victim of a severe form of trafficking in persons. *(Attach evidence to support your claim.)* ☐ Yes ☐ No
2. I **am** submitting a Law Enforcement Agency (LEA) declaration on Form I-914, Supplement B, Declaration of Law Enforcement Officer for Victim of Trafficking in Persons. *(If No, explain why you are not submitting the LEA Certification.)* ☐ Yes ☐ No
3. I **am** physically present in the United States, American Samoa, or the Commonwealth of the Northern Mariana Islands, or at a port of entry, **on account of trafficking.** *(If Yes, explain in detail and attach evidence and documents supporting this claim.)* ☐ Yes ☐ No
4. I fear that I will suffer extreme hardship involving unusual and severe harm upon removal. *(If Yes, explain in detail and attach evidence and documents supporting this claim.)* ☐ Yes ☐ No

PART C. T Nonimmigrant Status *(Continued)*

5. I have reported the crime of which I am claiming to be a victim. *(If Yes, indicate to which law enforcement agency and office you have made the report, the address and phone number of that office, and the case number assigned, if any. If No, please explain the circumstances.)* ☐ Yes ☐ No

Law Enforcement Agency and Office	*Address*	*Phone No.*
		Case No.

6. I am under *the age of 15 years. (If Yes, proceed to question 8.)* ☐ Yes ☐ No

7. I have complied with requests from U.S. government authorities for assistance in the investigation or prosecution of acts of trafficking. *(If No, explain the circumstances. You may add additional pages if necessary, marking them Form I-914, Part C.7.)* ☐ Yes ☐ No

8. This is the first time I have entered the United States. *(If No, list each date, place of entry and under which status you entered the United States for the past 5 years.)* ☐ Yes ☐ No

Date of Entry	*Place of Entry*	*Status*

9. My most recent entry was on account of the trafficking that forms the basis for my claim. *(Explain the circumstances of your most recent arrival.)* ☐ Yes ☐ No

10. I **want** an Employment Authorization Document. ☐ Yes ☐ No

11. I **am** now applying for one or more eligible family members. *(If Yes, complete and include a Form I-914, Supplement A, Application for Immediate Family Member of T-1 Recipient, for each family member for whom you are now applying. You may also apply to bring eligible family members to the United States at a later date.)* ☐ Yes ☐ No

PART D. Processing Information

Please answer the following questions. *(If your answer is "Yes" to any one of these questions, explain on a separate piece of paper. Answering "Yes" does not necessarily mean that you are not entitled to adjust your status or register for permanent residence.)*

1. Have you ever, in or outside the U.S.:
   a. knowingly committed any crime of moral turpitude or a drug-related offense for which you have not been arrested? ☐ Yes ☐ No
   b. been arrested, cited, charged, indicted, fined or imprisoned for breaking or violating any law or ordinance, excluding traffic violations? ☐ Yes ☐ No
   c. been the beneficiary of a pardon, amnesty, rehabilitation decree, other act of clemency or similar action? ☐ Yes ☐ No
   d. exercised diplomatic immunity to avoid prosecution for a criminal offense in the U.S.? ☐ Yes ☐ No

2. Have you ever received public assistance in the U.S. from any source, including the U.S. government or any state, country, city or municipality (other than emergency medical treatment), or are you likely to receive public assistance in the future? ☐ Yes ☐ No

3. Have you ever:
   a. within the past ten years been a prostitute or procured anyone for prostitution, or intend to engage in any such activities in the future? ☐ Yes ☐ No
   b. engaged in any unlawful commercialized vice, including, but not limited to, illegal gambling? ☐ Yes ☐ No
   c. knowingly encouraged, induced, assisted, abetted or aided any alien to try to enter the U.S. illegally? ☐ Yes ☐ No
   d. illicitly trafficked in any controlled substance, firearms, or persons, or knowingly assisted, abetted or colluded in illegal trafficking? ☐ Yes ☐ No

PART D. Processing Information *(Continued)*

4. Have you ever engaged in, conspired to engage in, or do you intend to engage in, sabotage, kidnapping, political assassination, hijacking or any other form of terrorist activity? ☐ Yes ☐ No

5. Have you ever solicited membership or funds for, or have you through any means ever assisted or provided any type of material support to, any person or organization that has engaged or conspired to engage in sabotage, kidnapping, political assassination, hijacking or any other form of terrorist activity? ☐ Yes ☐ No

6. Do you intend to engage in the U.S. in:
   a. espionage? ☐ Yes ☐ No
   b. any activity a purpose of which is opposition to, or the control or overthrow of, the government of the United States, by force, violence or other unlawful means? ☐ Yes ☐ No
   c. any activity to violate or evade any law prohibiting the export from the United States of goods, technology or sensitive information? ☐ Yes ☐ No

7. Have you ever been a member of, or in any way affiliated with, the Communist Party or any other totalitarian party? ☐ Yes ☐ No

8. Did you, during the period from March 23, 1933 to May 8, 1945, in association with either the Nazi Government of Germany or any organization or government associated or allied with the Nazi Government of Germany, ever order, incite, assist or otherwise participate in the persecution of any person because of race, religion, national orgin or political opinion? ☐ Yes ☐ No

9. Have you ever engaged in genocide, or otherwise ordered, incited, assisted or otherwise participated in the killing of any person because of race, religion, nationality, ethnic origin or political opinion? ☐ Yes ☐ No

10. Have you ever been deported from the U.S., or removed from the U.S. at government expense, excluded within the past year, or are you now in exclusion or deportation proceedings? ☐ Yes ☐ No

11. Are you under a final order of civil penalty for violating section 274C of the Immigration and Nationality Act for use of fraudulent documents or have you, by fraud or willful misrepresentation of a material fact, ever sought to procure, or procured, a visa, other documentation, entry into the United States or any immigration benefit? ☐ Yes ☐ No

12. Have you ever left the United States to avoid being drafted into the United States Armed Forces? ☐ Yes ☐ No

13. Have you ever been a J nonimmigrant exchange visitor who was subject to the two-year foreign residence requirement and not yet complied with that requirement or obtained a waiver? ☐ Yes ☐ No

14. Are you now withholding custody of a U.S. citizen child outside the U.S. from a person granted custody of the child? ☐ Yes ☐ No

15. Do you plan to practice polygamy in the U.S.? ☐ Yes ☐ No

PART E. Information about Your Family Members

List information for each family member you are now applying to have join you in the United States.

Name	Family Relationship	Date of Birth *(MM/DD/YYYY)*	Current Location

Complete Form I-914, Supplement A, Application for Immediate Family Member of T-1 Recipient, for each eligible family member listed above and attach it to this application.

PART F. Attestation and Release

After reading the information regarding penalties in the instructions, complete and sign below. If someone helped you prepare this application, he or she must complete Part G.

I have read, or had read to me, this form, the information provided on it, and the evidence provided with it, and I certify, under penalty of perjury under the laws of the United States of America, that all of the information in this entire application package, including the documentary evidence submitted with it, is true and correct.

I authorize the release of any information from my record which the Immigration and Naturalization Service needs to determine eligibility for the benefit I am seeking, to investigate my claim, and to investigate fraudulent claims. I further authorize the Immigration and Naturalization Service to release information to law enforcement agencies and prosecutors investigating or prosecuting crimes of trafficking or related crimes.

Signature of Applicant *(The Person in Part A.)*

[_____] _____

(Sign your name within the brackets) Date *(Month/Day/Year)*

PART G. Preparer and/or Translator Certification

To be completed and signed if form is prepared by a person other than the applicant.

I attest, under penalty of perjury, that I have assisted in the completion of this form and that to the best of my knowledge the information is true and correct.

_____ _____

(Preparer's/Translator's Printed Name) *(Preparer's/Translator's Signature)*

Address _____ Phone Number _____

Date *(Month/Day/Year)* _____ Relationship to the Applicant _____

WARNING: **Applicants who are in the United States illegally are subject to removal if their claims are not granted. Any information provided in completing this application may be used as a basis for the institution of, or as evidence in, removal proceedings even if the application is later withdrawn.**

OMB No. 1115-0246; Expires 05/31/02

U.S. Department of Justice
Immigration and Naturalization Service

Application for Immediate Family Member of T-1 Recipient

START HERE - Please Type or Print. ***Use black ink. See Instructions for information about eligibility and how to complete and file this application.***

The recipient of the T nonimmigrant classification is referred to as the principal applicant. His/her family members are referred to as derivative applicants. The Form I-914, Supplement A, is to be completed by the principal applicant.

PART A. Relationship

The derivative applicant is my: *(Check one)* ☐ Husband/Wife ☐ Child ☐ Parent

PART B. Information about Principal Applicant

Family Name	Given Name	Middle Name	Date of Birth *(MM/DD/YYYY)*	A# *(If any)*

Principal applicant's application has been previously: *(Check One)* ☐ Submitted ☐ Granted Conditional Approval ☐ Found Bona Fide ☐ Approved for T Nonimmigrant Status

PART C. Information about Derivative Applicant

Family Name	Given Name	Middle Name	A # *(If any)*	Social Security # *(If any)*

Other Names Used *(If any)*? *(Include maiden name and aliases)*

Intended Residence in U.S. *(Street Number and Name)*	Apt. No.	City

State	ZIP Code	Home Phone	Daytime Phone
		( )	( )

Mailing Address in the U.S., if other than above.	Apt. No.	City	State	ZIP Code

Sex	Marital Status	Date of Birth *(MM/DD/YYYY)*
☐ Male ☐ Female	☐ Single ☐ Married ☐ Divorced ☐ Widowed	

Names of Prior Husband/Wives *(if any)* and Dates Marriages Ended

Country of Birth	Country of Citizenship	Passport #	Issue Date *(MM/DD/YYYY)*	Place of Issuance

Is the Derivative Applicant currently in the United States? ☐ Yes ☐ No *(If Yes, complete the following.) He or she last arrived as a (visitor, student, stowaway, without inspection, other, please specify.)*

Has the Derivative Applicant previously entered the United States? ☐ Yes ☐ No *(If Yes, list each previous entry during the past five years. Attach additional sheets, if necessary.)*

Date of Entry	*Place of Entry*	*Status*

Arrival/Departure Record (I-94) Number, Date arrived, and Date authorized stay expired, or will expire. *(As shown on Form I-94 or I-95)*

PART C. Information about Derivative Applicant ***(Continued)***

Has family member for whom you are applying ever been under immigration proceedings?

☐ Yes ☐ No If Yes, answer the following: Where: _____ When *(MM/DD/YYYY)*: _____

☐ Exclusion ☐ Deportation ☐ Recission ☐ Judicial Proceeding

List your family member's spouse and children. *(Attach additional sheets of paper, if necessary. If family member is your spouse, list only his or her children.)*

Name	*Relationship*	*Date of Birth (MM/DD/YYYY)*	*Country of Birth*

Are you applying for employment authorization for your family member? ☐ Yes ☐ No *(If Yes, submit a Form I-765, Application for Employment Authorization, for the family member.)*

PART D. Processing Information

Please answer the following questions. *(If your answer is "Yes" to any one of these questions, explain on a separate piece of paper. Answering "Yes" does not necessarily mean that your family member will be denied T nonimmigrant status.)*

1. Has the family member for whom you are applying ever:
   a. knowingly committed any crime of moral turpitude or a drug-related offense for which he or she have not been arrested? ☐ Yes ☐ No
   b. been arrested, cited, charged, indicted, fined or imprisoned for breaking or violating any law or ordinance, excluding traffic violations? ☐ Yes ☐ No
   c. been the beneficiary of a pardon, amnesty, rehabilitation decree, other act of clemency or similar action? ☐ Yes ☐ No
   d. exercised diplomatic immunity to avoid prosecution for a criminal offense in the U.S.? ☐ Yes ☐ No
2. Has the family member for whom you are applying ever received public assistance in the U.S. from any source, including the U.S. government or any state, country, city or municipality (other than emergency medical treatment), or is he or she likely to receive public assistance in the future? ☐ Yes ☐ No
3. Has the family member for whom you are applying:
   a. within the past ten years been a prostitute or procured anyone for prostitution, or does he or she intend to engage in any such activities in the future? ☐ Yes ☐ No
   b. engaged in any unlawful commercialized vice, including, but not limited to, illegal gambling? ☐ Yes ☐ No
   c. knowingly encouraged, induced, assisted, abetted or aided any alien to try to enter the U.S. illegally? ☐ Yes ☐ No
   d. illicitly trafficked in any controlled substance, firearms, or persons, or knowingly assisted, abetted or colluded in illegal trafficking? ☐ Yes ☐ No
4. Has the family member for whom you are applying ever engaged in, conspired to engage in, or does he or she intend to engage in, sabotage, kidnapping, political assassination, hijacking or any other form of terrorist activity? ☐ Yes ☐ No
5. Has the family member for whom you are applying ever solicited membership or funds for, or through any means ever assisted or provided any type of material support to, any person or organization that has engaged or conspired to engage in sabotage, kidnapping, political assassination, hijacking or any other form of terrorist activity? ☐ Yes ☐ No
6. Does the family member for whom you are applying intend to engage in the U.S. in:
   a. espionage? ☐ Yes ☐ No
   b. any activity a purpose of which is opposition to, or the control or overthrow of, the government of the United States, by force, violence or other unlawful means? ☐ Yes ☐ No
   c. any activity to violate or evade any law prohibiting the export from the United States of goods, technology or sensitive information? ☐ Yes ☐ No
7. Has the family member for whom you are applying ever been a member of, or in any way affiliated with, the Communist Party or any other totalitarian party? ☐ Yes ☐ No
8. Did the family member for whom you are applying, during the period from March 23, 1933 to May 8, 1945, in association with either the Nazi Government of Germany or any organization or government associated or allied with the Nazi Government of Germany, ever order, incite, assist or otherwise participate in the persecution of any person because of race, religion, national orgin or political opinion? ☐ Yes ☐ No

PART D. Processing Information *(Continued)*

9. Has the family member for whom you are applying ever engaged in genocide, or otherwise ordered, incited, assisted or otherwise participated in the killing of any person because of race, religion, nationality, ethnic origin or political opinion? ☐ Yes ☐ No

10. Has the family member for whom you are applying ever been deported from the U.S., or removed from the U.S. at government expense, excluded within the past year, or is he or she now in exclusion or deportation proceedings? ☐ Yes ☐ No

11. Is the family member for whom you are applying under a final order of civil penalty for violating section 274C of the Immigration and Nationality Act for use of fraudulent documents or has he or she, by fraud or willful misrepresentation of a material fact, ever sought to procure, or procured, a visa, other documentation, entry into the United States or any immigration benefit? ☐ Yes ☐ No

12. Has the family member for whom you are applying ever left the United States to avoid being drafted into the United States Armed Forces? ☐ Yes ☐ No

13. Has the family member for whom you are applying ever been a J nonimmigrant exchange visitor who was subject to the two-year foreign residence requirement and not yet complied with that requirement or obtained a waiver? ☐ Yes ☐ No

14. Is the family member for whom you are applying now withholding custody of a U.S. citizen child outside the U.S. from a person granted custody of the child? ☐ Yes ☐ No

15. Does the family member for whom you are applying plan to practice polygamy in the U.S.? ☐ Yes ☐ No

PART E. Attestation and Release

The Derivative Applicant, the family member for whom you are applying, must sign below if he or she is presently in the United States. If someone helped you prepare this supplementary application, he or she must complete Part F.

I have read, or had read to me, this form, the information provided on it, and the evidence provided with it, and certify, under penalty of perjury under the laws of the United States of America, that the information on this supplementary application and the evidence submitted with it are true and correct.

I authorize the release of any information from the record which the Immigration and Naturalization Service needs to determine eligibility for the benefit I am seeking for the family member for whom I am applying, to investigate my claim, and to investigate fraudulent claims. I further authorize the Immigration and Naturalization Service to release information to law enforcement agencies and prosecutors investigating or prosecuting crimes of trafficking or related crimes.

[_____] _____

Signature of Derivative Applicant *(The family member for whom you are applying.)* Date *(Month/Day/Year)*

[_____] _____

Signature of Principal *(Sign your name within the brackets)* Date *(Month/Day/Year)*

PART F. Preparer and/or Translator Certification

To be completed and signed if form is prepared by a person other than the applicant.

I attest, under penalty of perjury, that I have assisted in the completion of this form and that to the best of my knowledge the information is true and correct.

_____ _____

(Preparer's/Translator's Printed Name) (Preparer's/Translator's Signature)

Address _____ Phone Number _____

Date *(Month/Day/Year)* _____ Relationship to the Applicant _____

WARNING: **Applicants who are in the United States illegally are subject to removal if their claims are not granted. Any information provided in completing this application may be used as a basis for the institution of, or as evidence in, removal proceedings even if the application is later withdrawn.**

PART G. Checklist

☐ I completely filled out and signed the form.

☐ I have attached evidence that:

- I am a victim of a severe form of trafficking;
- I am physically present in the United States on account of trafficking;
- I am cooperating with the government in the investigation/prosecution of the traffickers (unless under age 15); and
- I would suffer extreme hardship involving unusual and severe harm upon removal from the United States.

☐ I have included three photographs of myself.

☐ I have attached a check or money order for the required fees.

The required fees include:

- the fee for filing this application;
- the fingerprinting fee for the applicant, if the applicant is between the ages of 14 and 79 inclusive, and
- if the applicant is also currently filing for family members, the appliant is responsible for additional charges, as detailed in the instructions to Form I-914, Supplement A.

If I am applying for one or more family members:

☐ I have completed a Form I-914, Supplement A for each member for whom I am now applying and, if he or she is in the United States, each family member has signed that Form I-914, Supplement A.

☐ I have submitted the required evidence, including evidence of:

- my relationship to the family member for whom I am applying;
- my age, if I am applying for my parent;
- my child's age, if I am applying for my child; and
- the extreme hardship that either I or my family member will suffer, if my family member is not permitted to join me in the United States.

☐ I have included three photographs of each family member for whom I am now applying.

☐ I have included a Form I-765 Application for Employment Authorization, if I am requesting employment authorization for my family member.

☐ I have attached a check or money order for the required fees.

The required fees include:

- the fee for filing this supplementary application;
- the fingerprinting fee for the applicant, if the applicant is between 14 and 79; and
- the filing fee for Form I-765, Application for Employment Authorization, if the family member is requesting employment authorization.

NOTE: ***The required fees are posted at the INS website, at*** **http://www.ins.usdoj.gov,** ***and are also available from the INS National Customer Service Center, at 1-800-375-5283.***

OMB No. 1115-0246; Expires 05/31/02

U.S. Department of Justice
Immigration and Naturalization Service

Declaration of Law Enforcement Officer for Victim of Trafficking in Persons

Instructions to Certifying Officer: This applicant is applying for immigration benefits based upon a claim of having been a victim of a severe form of trafficking in persons. Please complete the form below based upon your knowledge of the case, including evidence developed by other law enforcement officers investigating the case.

In order to be granted immigration benefits, the applicant must demonstrate that he or she is present in the United States as a result of being a victim of a severe form of trafficking in persons. Unless the applicant is less than 15 years old, the applicant must also demonstrate that he or she is cooperating with law enforcement in the investigation and prosecution of the trafficking crime of which he or she was a victim.

To be completed by Federal Law Enforcement Officers for victims under the Victims of Trafficking and Violence Protection Act, Public Law 106-386.

PART A. General Information

Name of Government Agency: ☐ Immigration and Naturalization Service, DOJ ☐ Civil Rights Division, DOJ	☐ U.S. Marshall's Service, DOJ ☐ Federal Bureau of Investigation, DOJ ☐ Criminal Division, DOJ	☐ U.S. Attorney's Office ☐ Dept. of State Diplomatic Security ☐ Other _____	Date
Address of Agency/Official		Name and Title of Certifying Officer or Official	
City	State	ZIP Code	Phone No. ( )	Fax No. ( )
Victim's Name	Other Names Used	Sex ☐ Male ☐ Female	Date of Birth *(MM/DD/YYYY)*
Date of Crime	Charges		Case No.
Date Initiated *(MM/DD/YYYY)*	Case Status ☐ On-going ☐ Completed ☐ N/A	Date Completed *(MM/DD/YYYY)*	FBI Identification No., *if any*

PART B. Statement of Claim

1. The applicant is a victim of a severe form of trafficking in persons. Specifically, he or she is a victim of: *(Please check all that apply.)*

   ☐ Sex trafficking in which a commercial sex act was induced by force, fraud or coercion. Sex trafficking means the recruitment, harboring, transportation, provision, or obtaining of a person for the purpose of a commercial sex act.

   ☐ Sex trafficking and the victim is under the age of 18.

   ☐ The recruitment, harboring, transportation, provision, or obtaining of a person for labor or services through the use of force, fraud or coercion for the purpose of subjection to involuntary servitude, peonage, debt bondage, or slavery.

   ☐ Not applicable.

   ☐ Other, please specify on attached additional sheets.

2. Please describe the victimization upon which the applicant's claim is based and identify the relationship between that victimization and the crime under investigation/prosecution. Attach the results of any name or database inquiry performed in the investigation of the case. Please include relevant dates, etc. Has the applicant expressed any fear of retaliation or revenge if removed from the United States? Explain. Attach additional sheets, if necessary.

PART C. Cooperation of Victim *(Attach additional sheets, if necessary.)*

The applicant:

- ☐ Has complied with requests for assistance in the investigation/prosecution of the crime of trafficking. *(Explain below.)*
- ☐ Has failed to comply with requests to assist in the investigation/prosecution of the crime of trafficking. *(Explain below.)*
- ☐ Has not been requested to assist in the investigation/prosecution of any crime of trafficking.
- ☐ Has not yet attained the age of 15.
- ☐ Other, please specify on attached additional sheets.

PART D. Family Members

☐ Yes ☐ No Are any of the applicant's relatives believed to have been involved in his or her trafficking to the United States? If Yes, list the relatives and describe that relative's involvement in the applicant's trafficking.

PART E. Attestation

Based upon investigation of the facts, I certify, under penalty of perjury, that the above noted individual is or has been a victim of a severe form of trafficking in persons as defined by the VTVPA. I certify that the above information is true and correct to the best of my knowledge, and that I have made, and will make, no promises regarding the above victim's ability to obtain a visa from the Immigration and Naturalization Service, based upon this certification.

[_____]
(Signature of Law Enforcement Officer identified in Box A above)

_____
Date *(Month/Day/Year)*

[_____]
(Signature of Supervisor of Certifying Officer)

_____
(Printed Name of Supervisor)

_____
Date *(Month/Day/Year)*

[FR Doc. 02–2186 Filed 1–30–02; 8:45 am]
BILLING CODE 4410–10–C

Federal Register

Thursday,
January 31, 2002

Part III

Department of Justice

Office for Victims of Crime

Guidelines for the Antiterrorism and Emergency Assistance Program for Terrorism and Mass Violence Crimes; Notice

DEPARTMENT OF JUSTICE

Office for Victims of Crime

[OJP[OVC]–1309F]

Guidelines for the Antiterrorism and Emergency Assistance Program for Terrorism and Mass Violence Crimes

AGENCY: Office for Victims of Crime, Office of Justice Programs, Justice.

ACTION: Notice of final guidelines.

SUMMARY: The Office for Victims of Crime (OVC) has developed these final Guidelines to implement the victim assistance provisions contained in the Antiterrorism and Effective Death Penalty Act of 1996 (Pub. L. 104–132), the Omnibus Consolidated Appropriations Act of 1997 (Pub. L 104–208), the Victims of Trafficking and Violence Protection Act of 2000 (Pub. L. 106–386), and the Uniting and Strengthening America by Providing Appropriate Tools Required to Intercept and Obstruct Terrorism Act of 2001, Pub. L. 107–56 (hereafter referred to as the USA PATRIOT Act of 2001). The Victims of Crime Act (VOCA), 42 U.S.C. § 10603b and § 10603c, outlines the specific authority of the OVC to provide compensation and assistance to victims of acts of terrorism or mass violence within and assistance to victims of terrorism and mass violence outside the United States. Funding available through the Antiterrorism Emergency Reserve (hereafter referred to as the Emergency Reserve) is designed to provide timely relief and to help respond to immediate and on-going challenges in providing victim assistance services in the aftermath of cases of terrorism or mass violence. Funding and technical support is not provided automatically. Requested funds must supplement, not supplant, available resources. Non-federal contributions (cash or in-kind) are expected for each type of grant. Federal agencies are not expected to make a contribution. Amounts paid to victims from state funding sources to compensate victims of terrorism or mass violence may be included in a state's annual certification of payments to victims, which is the basis for matching annual federal crime victim compensation formula grants.

EFFECTIVE DATE: These final Guidelines are effective January 31, 2002, and until re-issuance by OVC.

FOR FURTHER INFORMATION CONTACT: Terrorism and International Victims Unit, Office for Victims of Crime, 810 Seventh Street, NW., Washington, DC 20531, telephone (202)307–5983.

SUPPLEMENTARY INFORMATION: VOCA provides federal financial assistance for the purpose of compensating and assisting victims of crime, to carry out a training and technical assistance program, to provide services for victims of federal crimes, to provide compensation and assistance services for victims of terrorism or mass violence, and to support fellowships and clinical internships. These final Guidelines provide specific information for the administration of funding for response to victims of terrorism or mass violence as authorized in 42 U.S.C. § 10603b and § 10603c.

Preamble to the Final Guidelines

OVC published proposed program guidelines in the **Federal Register** (FR, Vol. 66, No. 63) on April 2, 2001 for a 30-day public comment period. In addition, OVC distributed copies of the proposed guidelines to all VOCA state administrators, executive directors of national victim organizations, identified representatives in federal agencies with victim assistance responsibilities including the 93 United States Attorneys Offices, and other interested parties. In response to the notice of proposed program guidelines, OVC received 27 separate comments based on the **Federal Register** notice. In addition, comments were received from seven VOCA state victim assistance administrators at a working group meeting at their annual national conference held in Denver, Colorado. Of the written comments received from 27 individuals or organizations: Three came from special agents and medical staff at the Federal Bureau of Investigation; three from state crime victim compensation program representatives; four from state human services department divisions administering mental health programs; three from state departments of health and mental health; one from a state department of public welfare, office of mental health and substance abuse services; three from VOCA state assistance and compensation administrators, of which two came from a single state public safety agency; one from the Federal Emergency Management Agency; one from the Department of Treasury Enforcement Section; one from the Office of the Inspector General and one from the Secretary of the U.S. Department of Agriculture; one from the National Association of Crime Victim Compensation Boards; one from a VOCA state victim assistance administrator; one from Office of the Assistant Secretary of Defense, Special Operation Low Intensity Conflict Combating Terrorism Policy Support; one from the Drug Enforcement Administration; one from the Center for Mental Health Services, Emergency Services and Disaster Relief Branch, Substance Abuse and Mental Health Services Administration; and one from the Department of State, Overseas Citizens Services, Bureau of Consular Affairs.

OVC has attempted to address all of the comments and recommendations received during the public comment period. In addition, OVC has included in these final Guidelines new provisions contained in the USA PATRIOT Act of 2001 (PL 107–56) which contains a definition of ''domestic terrorism,'' expands the list of eligible applicants for funding in cases of ''domestic terrorism,'' establishes a new cap on the amount of money the OVC Director can set aside to assist victims of terrorism and mass violence, and re-titles the name of the account in which funding is set aside for these purposes as the Emergency Reserve. It also authorized the transfer of money into this account from the emergency supplemental appropriation for the September 11th disaster specifically to support services for the victims and surviving family members of this terrorist attack. In addition, OVC provided two points of clarification regarding the amount of funding available from the Emergency Reserve to a jurisdiction and clarified eligible applicants for funding based on recent inquiries following the ''September 11, 2001 attacks against America.'' The implementation of these final Guidelines will provide opportunities to broaden our understanding of the needs of victims and jurisdictions responding to terrorism or mass violence. As OVC learns from these experiences we will make the necessary adjustments to this program policy guidance.

Analysis and Summary of Comments

Overall, the comments were supportive of the direction taken by OVC in the proposed guidelines. Many respondents expressed appreciation for OVC's effort to provide structure and guidance to the field regarding funding available from the Emergency Reserve to support services and assistance to victims of terrorism or mass violence. Several respondents praised OVC for the flexibility built into the guidelines, including the application filing period and process, and timing for the different types of assistance.

In response to the comments and the September 11, 2001 attacks on America, OVC has made several additional changes in the final Guidelines. OVC

also has made formatting changes; added language to address property losses and damage and victim confidentiality and privacy; added definitions of ''victim,'' ''national of the United States,'' ''grant,'' ''cooperative agreement,'' ''reimbursable agreement,'' and ''interagency agreement;'' extended the period of time for accessing criminal justice support grants to up to 36 months; added a new subsection to address federal monitoring and oversight; simplified the application requirements; provided additional guidance regarding required program reporting; and provided specific application requirements by type of applicant agency. The comments from the field address six specific areas of the Guidelines: Coordination, pre-crisis planning, mental health interventions, application process and funding, allowable activities, and definitions. The following is a summary of the comments and PVC's response.

Coordination: Several of the respondents asked OVC to strengthen language recommending coordination among federal law enforcement and prosecution, state victim assistance administrators, and the state mental health community. In response, OVC added language to the ''coordination of effort with other public and private entities'' section of the final Guidelines recommending coordination among law enforcement, prosecution, state victim assistance and compensation programs, and the mental health community. In addition, we address this issue in the Introduction and Background section by adding a new subsection discussing pre-crisis planning.

Pre-crisis Planning: A number of respondents focused on the need to support pre-crisis planning efforts of states and other jurisdictions, and sought to secure funding for preliminary and on-going crisis planning efforts. They also recommended that the final Guidelines require states to have critical incident operations plans that identify state resources to respond to criminal mass disasters and memoranda of understanding that describe the relationship between the applicant and state mental health services.

Funding available to jurisdictions under these final Guidelines is specifically to support victim assistance services in the aftermath of criminal mass disaster. OVC strongly supports pre-crisis planning and has identified various resources available to assist states and communities in its National Directory of Victim Assistance Funding Opportunities, 2001.

Mental Health Interventions: One respondent expressed concern about the use of the term ''counseling'' and the potential for it to encourage interventions by non-qualified, non-credentialed individuals. Another respondent also suggested that the final Guidelines require states to document their inability to develop and/or identify state response resources prior to subcontracting for mental health counseling services. One respondent asked that OVC re-examine the time frames established for crisis response grants and consequence management grants to eliminate the gap in funding support for crisis counseling services and counseling and group therapy to ensure a continuum of psychological care for victims.

In response to the concern expressed regarding the term ''counseling'' and the credentials of persons providing mental health intervention, OVC has modified the language in the final Guidelines to indicate counseling and therapy that are provided by persons who meet state standards or who are supervised in accordance with state standards. In addition, we clarified this by adding two definitions: The definition of ''crisis counseling'' used in the Federal Emergency Management Agency (FEMA) regulations, and the definition of mental health counseling and care contained in OVC's Victim Assistance Program Guidelines. We believe these two additions to the final Guidelines address the concerns of the respondent with minimal federal intrusion on state decision-making.

OVC has entered into an interagency agreement with the Department of Health and Human Services' Center for Mental Health Services (CMHS), Emergency Services and Disaster Relief Branch to conduct research into currently available materials and protocols to address the immediate and longer-term mental health needs of victims of mass victimization; to prepare materials for federal law enforcement to assist victims of domestic and international terrorism and mass violence; to provide training and technical assistance to federal law enforcement on mental health care needs of victims; to assist federal law enforcement in coordinating its crisis response role with state and local agencies and community service organizations; and to develop partnerships between mental health and victim assistance disciplines at the state and local levels. This information has been added to a new subsection in the final Guidelines titled ''Support for Pre-Crisis Planning.''

With regard to the recommendation to require states to document the inability to secure state resources before subcontracting for mental health services, OVC believes the selection of service providers is best left to the standards established by the affected jurisdiction.

To address the possible gap in mental health interventions, OVC has adjusted the time range for consequence management grants to begin at the point in which crisis response grant funding terminates. Hence, the consequence management grants will now be available from nine months and up to 18 months after the terrorist or mass violence event.

Application Process and Funding: A few respondents recommended that funding available from the Emergency Reserve be retroactive to the date of the criminal event. Another respondent expressed support for a joint application for funding available from OVC and the CMHS. Two respondents asked for clarification regarding funding determinations. Specifically, they wanted to know the extent to which federal formula grant fund amounts would be factored into the funding decision, and if defined criteria will be established for making funding determinations. Another respondent asked if the range of eligible applicants could be expanded to include state criminal justice planning agencies, state and county mental health agencies, and state departments of education. A state compensation program representative asked that the application requirements be revised to establish specific supplemental information required of state compensation programs and to eliminate additional application certifications for states that receive formula grant funding from OVC to support victims. In addition, the respondent requested that OVC eliminate the requirement that ''recovered'' funds be used to assist other victims of the ''specific act of terrorism or mass violence for which Emergency Reserve dollars were awarded.''

Next, a respondent recommended that application requirements be consolidated into one section of the final Guidelines and specific application requirements be identified by the type of applicant. Finally, a respondent asked for clarification regarding the time limit in which an application may be filed noting that ''a state may initially have funds available and believe they are adequate; however future events may deplete resources.''

In response to these recommendations, OVC has made the following changes in the final Guidelines. OVC added language under the section describing the application

process that provides for pre-agreement costs retroactive to the date of the mass casualty event. Regarding the recommendation for a joint application for funding available from CMHS and OVC, we have added language to the coordination section which indicates that OVC may elect in some cases to transfer funds to other federal agencies with disaster relief responsibilities to support victim assistance interventions, including mental health counseling and care. To clarify the funding decision process, we added to the definition section of the final Guidelines the term ''undue financial hardship'' and provided additional guidance regarding the criterion for making such determinations. The USA PATRIOT Act of 2001 expanded the list of eligible recipients for funding in cases of terrorism within the United States to include not only eligible state crime victim compensation and assistance programs, but also victim service organizations, public agencies—federal, state, and local governments, and non-governmental organizations that provide assistance to victims. Funding to foreign governments is still prohibited.

In response to the three requests affecting state compensation programs, the final Guidelines have been modified to provide specific guidance regarding supplemental application information required from crime victim compensation programs. OVC has elected to retain the language requiring that funds recovered through state subrogation provisions be used to compensate other victims of the same terrorist or mass violence act for which they were originally awarded. Additional language has been added requiring state compensation programs and other recipients of funds to return any remaining funds at the end of the grant to OVC for deobligation and deposit into the Emergency Reserve. OVC is unable to establish a blanket certification for funding received from different account sources. Hence, no change has been made to the certification requirements. OVC did not establish an application deadline precisely for the reasons cited by the respondent. The period of time that elapses between the submission of an application and the catastrophic event does affect the type of grant assistance an applicant can request, i.e., OVC will not approve an application submitted 24 months after the event for a crisis response grant. Clarification regarding the time frame for application submission is provided in the section of the final Guidelines titled ''Application Processing and Turnaround Time.'' Finally, OVC has consolidated all the application requirements under section VII of the final Guidelines and identified the specific application requirements based on the type of agency/organization requesting funding support.

Allowable Activities: One respondent asked that ''direct (victim) outreach'' be identified as an allowable activity to ensure that the largest number of victims are reached following a terrorism or mass violence event. Another respondent acknowledged the need for prolonged victim assistance interventions based on the length of time it often takes to arrest the perpetrator(s) and bring him/her to trial. One respondent asked that the pool of eligible recipients be expanded to include emergency responders. Another respondent suggested that the allowable activities under the consequence management assistance grants include automated informational telephone service, and Attorney Advisor positions to address questions from victims about criminal proceedings.

Direct victim outreach is an allowable activity. The list of activities supportable with Emergency Reserve dollars was not meant to be exhaustive. Thus, OVC added a statement that ''[f]unding for services and other support may include, but is not limited to * * *''. The list of eligible activities outlined in the final Guidelines is intended to provide general guidance regarding the use of funds. We have added outreach and awareness to the list and language indicating that activities that are deemed necessary and essential to the provision of services may be funded with Emergency Reserve dollars. We also added automated informational telephone services to the list of allowable activities under the consequence management, crisis response, and criminal justice support grants, and Attorney Advisor and victim advocate personnel as an allowable cost under criminal justice support grants. We do not offer specific guidance regarding the approach for reaching victims or delivering services recognizing that these types of decisions may depend upon specific circumstances and are best left to the responding jurisdiction.

Finally, OVC added language which specifically identifies individuals in direct proximity to the crime who may have been traumatized by the criminal event, including emergency response personnel, and included a definition of ''victim'' in the definition section of the final Guidelines.

A number of states suggested that OVC include among the allowable costs administrative costs deemed necessary and essential to the delivery of services. In response, OVC included in the allowable cost section of these final Guidelines the language, ''authorizing use of a limited amount of available funding, as agreed upon by OVC and the applicant, for administrative purposes.'' (See Section VI.)

Definitions: A respondent requested that the definition of mass violence be expanded to acknowledge specifically the increased financial burden that state crime victim compensation programs may experience as a result of a criminal mass disaster. Another respondent asked that the term ''family members'' be defined to be responsive to the ''variability that exists in the structure and membership of contemporary families.'' Finally, one respondent asked OVC for specific guidance on the amount of the *non-federal contribution,* referred to as match.

The use of the term ''victim assistance'' was intended to be inclusive of all victim assistance efforts, including compensation for purposes of incidents of domestic terrorism or mass violence. To clarify our intent and respond to the comment received, OVC has modified the definition of mass violence to include specific reference to crime victim compensation efforts. OVC has elected not to define the term *''family member''* as we believe this term should be defined by the responding jurisdiction.

At this time, we are not prepared to establish a specific matching percentage or amount, because the level of resources available to a jurisdiction following a catastrophic event will vary greatly depending upon a range of issues, e.g., amount of public support, funding available for non-profit organizations, funding available from other federal agencies. No specific match percentage or dollar amount has been established for this program. However, non-federal contributions (cash or in-kind) are expected. OVC clarified this in the ''Definitions'' section under the term ''in-kind support/contribution.''

Final Guidelines

These final Guidelines incorporate recommendations received from the field during the public comment period on the proposed guidelines, and amendments to VOCA contained in the USA PATRIOT Act of 2001. The final Guidelines are organized as follows:

I. Final Program Guidelines
II. Introduction and Background
III. Statutory Language and Definitions
IV. Source of Funding
V. Types of Assistance

VI. Allowable Activities and Costs
VII. Accessing the Antiterrorism and Emergency Reserve
VIII. Reporting Requirements

I. Final Program Guidelines

A. Authority

42 U.S.C. § 10604 provides authority to the Director of OVC to establish rules, regulations, guidelines and procedures consistent with the program oversight and implementation responsibilities of the Director. OVC is publishing these final Guidelines for implementation of its authority under the USA PATRIOT Act of 2001, Antiterrorism and Effective Death Penalty of 1996, and the Victims of Trafficking and Violence Protection Act of 2000. These final Guidelines apply only to OVC's efforts to provide funding for victim compensation and assistance services in cases of terrorism and mass violence occurring within, and for victim assistance services in cases of terrorism and mass violence occurring outside, the United States. OVC will issue a separate set of Guidelines to implement the new International Terrorism Victim Compensation Program authorized by the Victims of Trafficking and Violence Protection Act of 2000 (Pub. L. 106–386).

This program is designed to supplement the available resources and services of entities responding to acts of terrorism or mass violence. Thus, Emergency Reserve support may be granted if needed services cannot be adequately provided with existing resources, or if the provision of services and assistance will result in an undue financial hardship on the jurisdiction's ability to respond to crime victims in a comprehensive and timely manner or impede the jurisdiction's ability to respond to other victims of crime. OVC works with several federal agencies such as the Federal Emergency Management Agency, the Department of Health and Human Services' CMHS, the Department of Education, the Department of State as well as others to make available their respective expertise and to maximize federal funding through interagency coordination to assist crime victims.

II. Introduction and Background

A. OVC Mission and Purpose

OVC was created by the U.S. Department of Justice in 1983 and formally established by Congress in 1988 through an amendment to the of 1984 (42 U.S.C. 10601) (VOCA). OVC's mission is to enhance the nation's capacity to assist victims of crime and to provide leadership in changing attitudes, policies, and practices to promote justice and healing for all victims of crime. OVC accomplishes its mission in a variety of ways: administering the Crime Victims Fund and the Emergency Reserve account; supporting direct services; providing training programs; sponsoring demonstration and evaluation projects with national and international impact; publishing and disseminating materials that highlight promising practices in the effective support of crime victims that can be replicated throughout the country and worldwide; and sponsoring fellowships and clinical internships. Also, OVC is in the process of establishing a compensation program for victims of international terrorism.

OVC works with international, national, tribal, state, military, and local victim assistance and criminal justice agencies, as well as other professional organizations to promote fundamental rights and comprehensive services for crime victims. The largest amount of OVC funding is provided to state agencies designated by the governor to administer programs to assist crime victims—crime victim compensation and victim assistance. OVC is not only a grant funding agency, but also advocates for the fair treatment of crime victims, develops policy and provides technical assistance to states, localities, and other federal agencies on effective responses to crime victims, and supports public awareness and education on critical victim issues (42 U.S.C. 10604 and 10605).

OVC monitors federal agency compliance with federal statutes and guidelines dictating the fair treatment of crime victims, and prepares an annual compliance report for the Attorney General as well as periodically updates the Attorney General Guidelines for Victim and Witness Assistance. OVC enters into interagency agreements and memoranda of understanding, offers technical assistance through expert consultants, and forms and leads working groups to address issues that have an impact on crime victims. In addition, OVC provides funding to support services to people victimized on tribal or federal lands, such as military bases and national parks. Finally, OVC provides emergency funds to federal agencies with victim responsibilities to assist victims of federal crime when no other resources are available.

B. Statement About Terrorism and Mass Violence

Violent and unexpected acts of terrorism and criminal mass violence may leave victims with serious physical and emotional wounds. Nothing in life prepares people for the horror of an act of terrorism or mass violence that robs them of their sense of security and in some instances a loved one. Victims of violent crime experience a range of needs—physical, financial, emotional, and legal. Victims are entitled by law in the United States to certain types of information and support services. While victims of terrorism have much in common with other violent crime victims and with disaster victims, they appear to experience higher levels of distress, in part due to the magnitude and scope of such traumatic events. Terrorism and mass violence may involve murders that are committed by more than one person, multiple victims, and a greater degree of violence than other criminal acts. In addition, the methods of targeting victims can contribute to the trauma and anxiety victims feel. Terrorist acts can be either random or specific. In the case of the Oklahoma City bombing, Federal Government employees were the targets. In the case of the school shooting in Littleton, Colorado at Columbine High School, students were the targets, resulting in 15 fatalities (including the gunmen) and numerous injuries. Terrorism and mass violence may place people at risk for significant physical and long-term psychological injuries. Like other victims of violent crime, victims of terrorism and mass violence need help in dealing with the crisis created by the event, in stabilizing their lives, and in understanding and participating in the criminal justice process—whether there is an arrest and trial soon after the criminal act or an arrest and trial are delayed for years.

International terrorist attacks can involve victims and survivors from many different countries and different states within the United States, and in foreign countries. The local government infrastructure and resources of non-government organizations vary considerably in foreign countries. Thus, the ability to respond to a terrorist or mass violence incident and to provide crisis intervention and services to victims abroad also varies. In addition, care givers are sometimes unable to intervene effectively due to language, legal, or cultural barriers. The efforts, services, or benefits of several federal agencies and programs, as well as state victim assistance programs and non-government organizations may be involved and must be coordinated. Further, victims abroad may need services or incur expenses that are not traditionally provided by states or the Federal Government. OVC works with federal, state, and local agencies as well

as international organizations to establish comprehensive, appropriate, and consistent services for these victims when terrorism and mass violence occur outside of the United States.

C. Support for Pre-Crisis Planning

OVC strongly supports pre-crisis planning as a means of assuring that jurisdictions have identified key personnel, available resources, and necessary protocols required for a comprehensive and effective response to criminal mass casualty crimes. OVC has supported several initiatives to assist interested jurisdictions with pre-crisis planning efforts. These initiatives include: promoting the development of community-based, multi-disciplinary, interagency assessment and planning processes for responding to cases of terrorism and mass violence; the design, development and implementation of long-range plans for establishing formal collaborative efforts involving victim service providers, law enforcement, fire and rescue, and other emergency response agencies; the use of self-assessment and planning tools, protocols for coordination and collaboration of victim services; the integration of victim services into incident command structures; and training for crisis response implementation teams to help with problem-solving, working cooperatively in a multi-disciplinary environment, designing and developing of interagency protocols, and skill-based training to allow teams to work together.

OVC has also supported the examination of materials and protocols to address the immediate and longer-term mental health needs of victims of terrorism and mass violence; the preparation of materials for federal law enforcement to assist victims of domestic and international terrorism and mass violence; the development of training and technical assistance to federal law enforcement on mental health care needs of victims, techniques to assist federal law enforcement in coordinating its crisis response role with state and local agencies and community service organizations; and the development of partnerships between mental health and victim assistance disciplines at the state and local levels. Although funding available under these final Guidelines is intended to assist jurisdictions in the aftermath of a terrorist event or mass violence incident, other resources and assistance are available from OVC to assist with pre-crisis planning.

Jurisdictions interested in crisis response planning are encouraged to contact OVC for more information about these initiatives and other resources available to assist with their efforts.

D. Action To Address Terrorism and Mass Violence

Following the bombing of the federal office building in Oklahoma City on April 19, 1995, Congress took a number of legislative steps to authorize funding and activities to assist the bombing victims. First, they passed legislation authorizing the Director of OVC to set aside monies in an Antiterrorism and Emergency Reserve account and to make funds available to provide assistance and compensation to the victims of the bombing, to facilitate their observation and attendance in trial proceedings, and for other related expenses. Congress also amended the VOCA of 1984 [42 U.S.C. § 10603b] to provide general authority to the OVC Director to respond to other incidents of terrorism or mass violence within the United States and abroad. OVC has used the Antiterrorism and Emergency Reserve to provide funding to support the victims of the Oklahoma City bombing, the bombing of Pan Am Flight 103, the bombing of the U.S. Embassies in Kenya and Tanzania, and two cases of mass violence—the school shootings in Oregon and Colorado. Most recently this account has been used to support the federal, state, and local responses to the terrorist attacks of September 11, 2001.

In the second session of the 106th Congress, the Victims of Trafficking and Violence Protection Act of 2000 (Pub. L. 106–386) was enacted. This law provides aid for victims of terrorism and expanded OVC's authority to respond to incidents of terrorism and mass violence outside the United States. Congress authorized the OVC Director: to deposit deobligated dollars from other funded program areas into the Emergency Reserve; to expand the list of eligible applicants for assistance funding in cases of terrorism outside the United States to include victim service organizations, public agencies (including federal, state, or local governments), and non-governmental organizations that provide assistance to victims of crime; and to establish a program to compensate victims of acts of international terrorism that occur outside the United States. The USA PATRIOT Act of 2001 expanded the list of eligible recipients for funding in cases of terrorism within the United States to not only include eligible state crime victim compensation and assistance programs, but also victim service organizations, public agencies—federal, state, and local governments, and non-governmental organizations that provide assistance to victims.

E. Role of the Federal Government

In recent years, the Federal Government has been called upon to play a larger role in mitigating and responding to all types of human-caused violent events and disasters. The federal responsibility ranges from immediate disaster relief to subsequent assistance that helps victims and communities to recover from a terrorist act or mass violence incident, and to help victims participate effectively in the criminal justice process. In cases of terrorism and mass violence within the United States where requests for funding for mental health services are made, OVC may work in tandem with the Emergency Services and Disaster Relief Branch at the Center for Mental Health Services, Substance Abuse and Mental Health Services Administration (SAMHSA). Moreover, because terrorist acts are primarily federal crimes, investigated and prosecuted by federal law enforcement officials, components of the Department of Justice engaged in criminal investigative, prosecution, or correction functions have responsibilities under the *Attorney General Guidelines for Victim and Witness Assistance* related to victims' rights and services.

F. Role of State Governments

State Crime Victim Compensation Programs reimburse crime victims for out-of-pocket expenses related to their victimization such as medical expenses, mental health counseling, funeral and burial costs, and lost wages. State agencies fund a wide variety of direct assistance to victims of federal and state crimes such as crisis counseling, temporary shelter, and criminal justice advocacy. OVC works in concert with these programs to maximize the limited funding available to assist crime victims and facilitate coordination among the various responding agencies including federal law enforcement and prosecution-based victim and witness assistance staff.

G. Role of Other Public and Private Entities

Public and private sector organizations have a unique role in meeting the needs of crime victims through their various mandates and programs. Organizations like the United Way, the American Red Cross, and others offer important large-scale response to communities victimized by crime. In addition, community-based, nonprofit victim assistance programs provide a wide range of vital services to victims of crime that complement

assistance available from other public and private agencies.

III. Statutory Language and Definitions for This Program

A. Victims of Crime Act and Amendments

The Antiterrorism and Effective Death Penalty Act of 1996 gave OVC the authority to establish and access the Emergency Reserve account in terrorism and mass violence cases. The Act amended the VOCA adding a new provision, 42 U.S.C. 10603b, which covers terrorism or mass violence occurring either within or outside the United States. The Victims of Trafficking and Violence Protection Act of 2000 expanded OVC's authority under 42 U.S.C. 10603b(a) to authorize the OVC Director to provide comprehensive and timely assistance to victims of terrorism occurring outside the United States. The USA PATRIOT Act of 2001 (Pub. L. 107–56) established a definition of ''domestic terrorism,'' expanded the list of eligible applicants for funding in cases of ''domestic terrorism,'' established a new cap on the amount of money the OVC Director can set aside to assist victims of terrorism and mass violence, and re-titled the name of the account in which funding is set aside for these purposes as the Emergency Reserve. It also authorized the transfer of money into this account from the emergency supplemental appropriation for the September 11th attacks on America, specifically to support services for the victims and surviving family members of this terrorist attack.

OVC may provide funding for emergency relief to benefit victims, including crisis response efforts, assistance, training, and technical assistance, and on-going assistance including during any investigation or prosecution. Such funding may be provided to states, victim service organizations, public agencies (including federal, state, or local governments), and non-governmental organizations that provide assistance to victims of crime.

In cases of terrorism or mass violence occurring within the United States, 42 U.S.C. 10603b(b) authorizes OVC to provide emergency relief, including crisis response efforts, assistance, training, and technical assistance for the benefit of victims of terrorist acts or mass violence. Funding may be awarded to eligible state crime victim compensation and assistance programs, victim service organizations, public agencies—federal, state, and local governments, and non-governmental organizations that provide assistance to victims.

B. Definitions

1. Terrorism Occurring Within the United States

For the purposes of the Antiterrorism and Emergency Assistance Program, ''terrorism occurring within the United States'' is defined by the term ''domestic terrorism'' found in 18 U.S.C. 2331, as amended. (As of the publication of these Guidelines, 18 U.S.C. 2331 reads as follows: ''domestic terrorism'' means activities that—(A) Involve acts dangerous to human life that are a violation of the criminal laws of the United States or of any State, (B) appear to be intended—(i) to intimidate or coerce a civilian population; (ii) to influence the policy of a government by intimidation or coercion; or (iii) to affect the conduct of a government by mass destruction, assassination or kidnaping; and (c) occur primarily within the territorial jurisdiction of the United States.'' (18 U.S.C. 2331).

2. Terrorism Occurring Outside the United States

''Terrorism occurring outside the United States'' is defined by the term ''international terrorism'' found in 18 U.S.C. § 2331, as amended. (As of the publication of these Guidelines, 18 U.S.C. § 2331 reads as follows: ''The term 'international terrorism' means activities that—(A) Involve violent acts or acts dangerous to human life that are a violation of the criminal laws of the United States or of any State, or that would be a criminal violation if committed within the jurisdiction of the United States or of any State; (B) appear to be intended—(i) to intimidate or coerce a civilian population; (ii) to influence the policy of a government by intimidation or coercion; or (iii) to affect the conduct of a government by mass destruction, assassination or kidnaping; and (C) occur primarily outside the territorial jurisdiction of the United States, or transcend national boundaries in terms of the means by which they are accomplished, the persons they appear intended to intimidate or coerce, or the locale in which their perpetrators operate or seek asylum.'' (18 U.S.C. 2331)).

3. Mass Violence Occurring Within or Outside the United States

The term ''mass violence'' is not defined in VOCA or any statute amending VOCA, nor is it defined in the U.S. Criminal Code. Thus, OVC has developed a working definition of this term. The term ''mass violence'' herein means an intentional violent criminal act, for which a formal investigation has been opened by the Federal Bureau of Investigation or other law enforcement agency, that results in physical, emotional or psychological injury to a sufficiently large number of people as to significantly increase the burden of victim assistance and compensation for the responding jurisdiction as determined by the OVC Director.

4. Emergency Relief

''Emergency relief'' means those activities intended to address a need which, if left unattended, may result in significant consequences for victims. *Emergency relief* may include assistance required immediately following the crime as well as activities needed during the investigation and prosecution of an act of terrorism or mass violence.

5. Supplantation

''Supplantation'' means to deliberately reduce state or local funds because of the availability of federal funds. For example, when state funds are appropriated for a stated purpose and federal funds are awarded for that same purpose, the state replaces its state funds with federal funds, thereby reducing the total amount available for the stated purpose (See OJP Financial Guide available on the OJP homepage at www.ojp.usdoj.gov/).

6. In-Kind Support/Contribution

''In-kind support/contribution'' includes, but is not limited to, the valuation of in-kind services. ''In-kind'' is the value of something received or provided that does not have a cost associated with it. For example, if an in-kind match is permitted by law (other than cash payments), then the value of donated services could be used to comply with the match requirement. (OJP Financial Guide).

Note: No specific matching percentage or dollar amount has been established for this program. However, non-federal contributions (cash or in-kind) are expected from the applicant.

7. Crisis Counseling

''Crisis counseling'' means the application of individual and group treatment procedures that are designed to ameliorate mental and emotional crises and any resulting psychological and behavioral conditions stemming from a major disaster or its aftermath.

8. Mental Health Counseling and Care

''Mental health counseling and care'' means the assessment, diagnosis, and treatment of an individual's mental and

emotional functioning. Mental health counseling and care must be provided by a person, or under the supervision of a person, who meets state standards to provide these services.

9. Undue Financial Hardship

''Undue financial hardship'' is one basis upon which OVC will make funding determinations. For the purpose of these final Guidelines, ''*undue financial hardship*'' means the unanticipated allocation of substantial financial resources that adversely affect the ability to fund general services for victims.

10. Property Damage

''Property damage'' is damage to material goods, but does not include damage to prosthetic devices, eyeglasses, other corrective lenses, dental devices, or other medically-related devices. ''Property loss'' is destruction of material goods or the physical loss of money, stocks, bonds, etc.

11. Victim (International)

In cases of international terrorism and mass violence, the term ''victim'' has the same meaning as ''victim'' in 42 U.S.C. § 10603b, as amended, (As of the publication of these Guidelines, 42 U.S.C. 10603b reads as follows: ''the term ''victim''—(A) means a person who is a national of the United States or an officer or an employee of the United States Government who is injured or killed as a result of a terrorist act or mass violence occurring outside the United States; and (B) in the case of a person * * * who is less than 18 years of age, incompetent, incapacitated, or deceased, includes a family member or legal guardian of that person.'' [42 U.S.C. § 10603b]), except that (a) it also includes individuals who are likely to suffer traumatic effects of the incident, for example people in direct proximity to the crime and emergency responders; and (b) notwithstanding any other provision hereof, in no event shall an individual who is criminally culpable for the terrorist act or mass violence receive any assistance under this section, either directly or on behalf of a victim.

12. Victim (Domestic)

In cases of terrorism and mass violence within the United States, the term ''victim'' has the same meaning as ''victim'' in 42 USCA 10603c, as amended. (As of the publication of these Guidelines, 42 U.S.C. 10603c defines ''victim'' as a person who has suffered direct physical or emotional harm as a result of the commission of a crime.) Because of the nature of terrorist incidents, the term victim will also include individuals who are likely to suffer traumatic effects of the incident, for example people in direct proximity to the crime and emergency responders. In addition, OVC requires that consistent with other portions of VOCA, no individual who is criminally culpable for the terrorist act or mass violence may receive either assistance or compensation either directly or on behalf of a victim.

13. National of the United States

The term ''national of the United States'' is defined by the term ''national of the United States'' found in section 101(a) of the Immigration and Nationality Act, 8 U.S.C. 1101(a), as amended. (As of the publication of these Guidelines, 8 U.S.C. 1101 reads as follows: ''national of the United States'' means (A) a citizen of the United States, or (B) a person who, though not a citizen of the United States, owes permanent allegiance to the United States.'' [8 U.S.C. 1101]) A ''person who owes permanent allegiance to the United States'' includes residents of the American Samoa and Swain Island, outlying possessions of the United States, who have not been granted the privilege of citizenship.

14. Grant

The term ''grant'' means an award of federal funds to states, units of local government, or private organizations at the discretion of the awarding agency or on the basis of a formula. Grants are used to support a public purpose. Under these final Guidelines, VOCA victim assistance and compensation programs and other state and local governmental agencies will be awarded funds in the form of a grant.

15. Reimbursable Agreement

The term ''reimbursable agreement'' means a written instrument of agreement for services or goods made between the Office of Justice Programs (OJP) or one of its bureaus or offices and another federal agency or a state or local government agency. Each Reimbursable Agreement entered into by an OJP bureau/office to reimburse another agency will result in the establishment of an obligation. Such funding arrangements are negotiated by the entities involved. Under these final Guidelines, the transfer of funds to federal agencies will be in the form of a reimbursable agreement.

16. Cooperative Agreement

The term ''cooperative agreement'' means an award to states, units of local government or private organizations at the discretion of the awarding agency. Cooperative agreements are utilized when substantial involvement is anticipated between the awarding agency and the recipient during the performance of the contemplated activity. Under these final Guidelines, funding awarded to nonprofit organizations will be made in the form of a cooperative agreement.

17. Foreign Power

(a) ''Foreign power'' means—

(1) A foreign government or any component thereof, whether or not recognized by the United States;

(2) Faction of a foreign nation or nations, not substantially composed of United States persons;

(3) An entity that is openly acknowledged by a foreign government or governments to be directed and controlled by such foreign government or governments;

(4) A group engaged in international terrorism or activities in preparation thereof;

(5) A foreign-based political organization, not substantially composed of United States persons; or

(6) An entity that is directed and controlled by a foreign government or governments. (See 50 U.S.C. § 1801(a).)

IV. Source of Funding

A. Crime Victims Fund

A major responsibility of OVC is to administer the Crime Victims Fund, which is derived, not from tax dollars, but from fines and penalties paid by federal criminal offenders, and gifts, donations, and bequests from private entities or individuals. A large percentage of the money collected each year is distributed to states to assist in funding their victim assistance and compensation programs. These programs are the lifeline services that help many victims to cope with the devastation of crime. The Fund also supports OVC's training, technical assistance and demonstration efforts, direct services to victims of federal crime, program evaluation and compliance efforts, and fellowships and clinical internships.

B. Antiterrorism Emergency Reserve

The OVC Director is authorized to hold certain amounts from of the Crime Victims Fund in reserve for three purposes—(i) To support compensation and assistance services for victims of domestic terrorism or mass violence, (ii) to support assistance services to victims of international terrorism, and (iii) to fund directly an International Terrorism

Victim Compensation Program. Thus far this money has been used to assist the victims of the September 11, 2001 terrorist attacks on America, Oklahoma City bombing, the East Africa embassy bombings, Pan Am Flight 103 bombing, and school shootings in Oregon and Colorado. In the September 11th attacks on America, and the Oklahoma City and Pan Am Flight 103 bombing cases, Congress enacted special legislation that expanded OVC's authority to fund activities beyond the parameters of its previous governing statute.

V. Types of Assistance

There are five types of support available from OVC to respond to terrorism and mass violence: (a) Crisis response grants; (b) consequence management grants; (c) criminal justice support grants; (d) compensation grants; and e) technical assistance/training services. Jurisdictions are not limited to receiving only one type of assistance. Funding and other assistance may be provided for an extended period of time if a justification is provided by the applicant. The established time frames for funding are flexible and not intended to prohibit the submission of applications at a different time, if warranted.

Justification for an extension must meet the *''emergency relief''* requirement, as determined by the OVC Director and the Office of General Counsel. Funding may be provided for each type of assistance available; however, coordination among the applicants is expected and a separate application must be submitted for each. OVC does not provide funding directly to individual crime victims, except compensation benefits to qualified applicants in the case of international terrorism.

A. *Crisis Response Grants (emergency/short-term, up to 9 months)* are designed to provide resources to help victims rebuild adaptive capacities, decrease stressors, and to reduce symptoms of trauma immediately following the terrorism or mass violence event. Requests for *crisis response funding* must be made as soon as practicable following the terrorism or mass violence event.

B. *Consequence Management Grants (on-going/longer-term, up to 18 months)* are designed to provide supplemental resources to help victims adapt to the trauma event and to restore victims' sense of equilibrium.

C. *Criminal Justice Support Grants (on-going/longer-term, up to 36 months)* are designed to facilitate victim participation in an investigation or prosecution directly related to the terrorist and mass violence event. The nature of the support being requested is a factor in determining the amount as well as the extent to which the response involves activities that will result in permanent improvements in how victims access and participate in criminal justice proceedings such as the development of protocols and systems to enhance victim notification.

Note: It is within the OVC Director's authority to approve or deny requests for support for subsequent or parallel state criminal investigations and prosecutions.

D. *Crime Victim Compensation Grants* are designed to provide supplemental funding to a state crime victim compensation program that reimburses victims for out-of-pocket expenses related to their victimization in cases of terrorism or mass violence occurring within the United States. Grant funds may be used to pay claims to victims for costs that include, but are not limited to, medical and mental health counseling costs, funeral and burial costs, and lost wages. (See Section VI for other allowable activities and costs.) Emergency Reserve funds may not be used to cover property damage or property loss. (See ''Definitions'' section of these Guidelines.) OVC may provide funding to other organizations to cover expenses not traditionally covered by state crime victim compensation programs. OVC will coordinate such awards with state crime victim compensation programs.

In the event that a state recovers expenses on behalf of a victim from a collateral source, the amount recovered must be used either (1) to assist other victims of the same crime for which funds were awarded, or (2) returned to OVC and deobligated in accordance with the applicable provisions of the *OJP Financial Guide* and Section 1402(e)of VOCA.

E. *Request for Training and Technical Assistance.* A request for training or technical assistance may be made any time during the aftermath of a terrorism or mass violence event and during the criminal justice investigation or prosecution. Technical assistance is principally available to help federal, state, and local authorities identify victim needs and needed resources, to coordinate services to victims, to develop short- and longer-term strategies for responding, and for other purposes deemed appropriate by the OVC Director. While no direct funding is available, OVC may the use the Emergency Reserve to support the expenses of experts to meet the training and technical assistance needs of applicants.

VI. Allowable Activities and Costs

The range of services that OVC will support for victims of terrorism and mass violence is outlined in this section. Allowable expenses are based, in part, on activities authorized in guidelines established for OVC's Federal Emergency Assistance Fund and VOCA Victim Assistance and Compensation Program Guidelines. In addition, OVC has relied upon the requirements of the *Attorney General Guidelines for Victim and Witness Assistance* to afford rights and provide services to federal crime victims to guide the development of these final Guidelines.

Services identified in these final Guidelines are intended to complement services that are available from other agencies and organizations. Funding is expected to support a ''base'' level of assistance to the victims of the terrorism or mass violence event. Funding may be used to support activities that are deemed necessary and essential to the provision of services, including a limited amount, as agreed upon by OVC and the applicant, for administrative purposes. These services include but are not limited to the following:

A. Crisis Response Assistance

Assistance securing compensation
Automated informational telephone services
Child and dependent care
Coordination
Crisis counseling
Emergency food, housing, and clothing
Emergency travel and transportation
Employer and creditor intervention
Outreach, awareness, and education
Toll-free telephone lines
Victim/Community needs assessment (limited)

B. Consequence Management Assistance

Counseling and group therapy
Case management
Employer and creditor intervention
Victim informational websites
Rehabilitation expenses
Vocational rehabilitation
Temporary housing, per diem, and relocation
Emergency travel or transportation
Victim/Community needs assessment (expanded)
Outreach, awareness, and education
Automated informational telephone services
Coordination

C. Criminal Justice Support Assistance

Assistance with victim impact statements
Attorney advisor and victim advocate personnel cost
Automated informational telephone services

Case briefings by investigators, prosecutors
Coordination
Criminal justice notification
Information and Referral
Outreach, awareness, and education
Support victim participation in criminal justice proceedings, e.g., travel/transportation to court or closed-circuit viewing facility, counseling, advocacy, etc.
Victim/Community needs assessment
Victim Identification
Victim Information (printed and electronic)

D. Crime Victim Compensation (in cases of domestic terrorism)

Autopsy, refrigeration, and transport of body
Coordination
Co-payments required by insurance programs
Emergency travel and/or transportation costs
Long-distance telephone costs to contact family members
Medical expenses including non-medical attendant services, rehabilitation and physical therapy diagnostic examinations, prosthetic devices, eyeglasses
Outpatient mental health treatment/therapy
Outreach, awareness, and education

Note: Allowable activities in one category may be necessary and authorized in another funding category.

E. Training and Technical Assistance

Conducting needs assessment and planning
Defining the mental health needs of victims
Identifying strategies for integrating victim assistance in the incident command structure
Improving coordination and collaboration between responding agencies/organizations
Linking mental health services and victim assistance services
Working cooperatively in a multi-disciplinary environment

VII. Accessing Antiterrorism Emergency Reserve

A. Eligible Applicants

Applicants eligible for funding include state victim assistance and victim compensation programs, public agencies including federal, state, and local governments, and victim service and non-governmental organizations. In cases within the United States, applications will be accepted only from the jurisdiction in which the crime occurred unless a statute establishes a special authorization and appropriation supporting allocations to other jurisdictions, or a compelling justification can be provided to the OVC Director supporting requests from other jurisdictions.

It is the responsibility of the jurisdiction where the crime occurred to conduct the necessary outreach and make services and/or funding available to all victims of crimes which occur within their boundaries. However, if a substantial number of victims/surviving family members reside in another jurisdiction, in cases when the applicant is a state agency, the grantee may sub-award Antiterrorism Emergency Reserve dollars received from OVC to another jurisdiction/eligible state agency when doing so is an efficient and cost-effective way to provide services to victims/survivors who reside in another state.

OVC will not provide funding to a foreign power or domestic organization operated for the purpose of engaging in any significant political or lobbying activities or to individual crime victims.

The funded applicant may subcontract Antiterrorism Emergency Reserve dollars to another organization with the concurrence of OVC. Subcontracting entities must meet the eligibility criteria and abide by the statutory provisions contained in VOCA, the Antiterrorism and Effective Death Penalty Act, the Victims of Trafficking and Violence Protection Act, the USA PATRIOT Act of 2001, and the requirements set forth in these final Guidelines.

B. Eligible Recipients of Benefits and Services

In cases abroad, eligible recipients include victims who are nationals of the United States or an officer or employee of the United States Government as defined in section III(B), (11) of these final Guidelines. Unless otherwise indicated, these individuals are generally eligible for assistance from federally-funded victim assistance programs. In cases of terrorism and mass violence within the United States, eligible recipients of compensation and assistance include victims as defined in section III (B)(12) of these final Guidelines, including victims of other crimes where a causal relationship to the terrorist incident can be established.

C. Coordination of Effort With Other Public and Private Entities

No single agency can effectively respond to and meet all of the short- and longer-term needs of victims of a terrorist or mass violence incident. In most instances within the United States the resources of multiple agencies (local, state, and federal) are involved. In developing these final Guidelines, OVC has drawn heavily upon the experiences of agencies such as the Federal Emergency Management Agency and the Center for Mental Health Services, both of which have responsibility for providing assistance to communities following disasters within the United States. OVC will work closely with applicants to ensure the most appropriate utilization of resources. Applicants should identify other public and private entities that have been consulted in the process of preparing the application and describe how the proposed services fit within the overall scheme for addressing victim needs.

OVC will consider the level of coordination and the availability of resources from other federal, state, local, and private entities in making funding determinations. Extensive coordination with agencies such as state emergency preparedness, state mental health, local chapters of the American Red Cross and the United Way, and between federal and state law enforcement and prosecutor personnel is a necessary component of an effective response to terrorism and mass violence and a criterion upon which OVC will base its funding decision.

In cases of terrorism and mass violence abroad, the short-term and subsequent responses may involve resources of numerous federal and state agencies and non-governmental organizations, depending upon the nature of the incident and location. Coordination of efforts in these cases is critical and OVC will work closely with applicants to ensure the most appropriate utilization of resources.

D. Areas of Special Concern

In the development of a request for assistance, the applicant must be cognizant of special concerns, such as applicable state or federal victims' rights laws and requirements, and the needs of populations that are especially vulnerable, such as children, the elderly, and people with disabilities, and people of different ethnic backgrounds.

E. Application Process

An application for funding should be submitted to the OVC Director as soon as appropriate following a terrorist or mass violence event by the appropriate state or federal official, or private victim service or non-governmental organization. OVC has developed an application kit for Antiterrorism and Emergency Reserve dollars. The kit is

available on the OVC Web-site at *www.ojp.usdoj.gov/ovc* at the ''grants and funding'' page and will be mailed or faxed to potential applicants upon request.

There are two factors that determine the application submission requirements: (1) The applicant status, i.e., government agency (federal, state, or local), non-governmental organization, or victim service organization; and (2) the type of support requested, i.e., crisis response, consequence management, criminal justice, victim compensation, and/or technical assistance (no direct funding). Application requirements are listed below.

Application Requirements for State Crime Victim Compensation Programs

Funding will be made available to state crime victim compensation programs in the form of a grant. Requests for funding from state crime victim compensation programs may be made at any time and should include: (1) A description of the qualifying crime; (2) the projected number of claims to be paid and the projected number of claimants to receive payments; (3) the state's maximum award amount by category, e.g., medical, mental health, loss wages, funeral, etc.; and (4) SF 424, Application for Federal Assistance and applicable assurances and forms. The request should also describe the range of expenses covered by the program and the amount of state funding available to cover victim claims.

Application Requirements for all Other Recipients of Funds

All other applicants seeking Emergency Reserve support are required to submit a letter of request containing the following information:

(1) Type of crime and description of the criminal event;

(2) Identification of the lead law enforcement agency conducting the investigation;

(3) Estimated number of victims affected by the crime;

(4) Description of the applicant's role in responding to the victim population since the date of the incident;

(5) Description of services that funding will support and how these efforts will complement services in place or respond to an unmet need;

(6) The amount of funding requested and the time frame for support; and

(7) Description of outreach and coordination with other public and private entities in the process of preparing the request for assistance.

In addition, applicants, except federal agencies, must submit (1) SF 424, Application for Federal Funding and applicable assurances and forms; and (2) Budget and budget narrative including a description of all other federal and non-federal contributions (cash or in-kind).

To Request Training and Technical Assistance Support

Training and technical assistance may be requested by submitting a letter describing the nature of the problem; the type of expertise or assistance needed; the duration of assistance; and the projected outcomes of the technical assistance or training.

Application Processing and Turnaround Time

It is OVC's intention to provide rapid support to assist victims of terrorism and mass violence. Upon receipt of a letter of request and application, an OVC staff person will review the request, may contact the requesting agency to clarify any ambiguities, and make a recommendation to the OVC Director regarding the funding request in accordance with OVC's internal protocol for responding to incidents of terrorism and mass violence. The applicant can expect to receive notification regarding the determination from OVC within 5 business days. The applicant will be notified via telephone, Internet, or facsimile.

A determination by the OVC Director to make funding available will be followed by a complete review of the application including an analysis and approval of the budget by the Office of the Comptroller. Funds will be available upon completion of the review and written notification and acceptance of the award.

There is no specific due date for applications. However, the type of assistance available is subject to the time frame when the application is received, i.e., an applicant who submits a request 18 months after the catastrophic event will not be eligible to receive a ''crisis response'' grant.

H. Pre-Agreement Costs

Generally, since a community may incur substantial costs immediately following a terrorist act or mass violence event, OVC may, upon request, approve costs which were incurred prior to the start date of the award. The applicant should not assume that pre-agreement costs are covered without formal notification from OVC.

I. Amount of Funding Available per Incident

The amount of funding available is decided on a case-by-case basis based on factors such as the availability of other resources, the severity of the impact, and the number of people suffering from physical, emotional, or psychological injury. OVC will not provide total (100%) reimbursement to any jurisdiction or program for activities undertaken to assist victims of terrorism or mass violence. The amount of funding made available will be influenced by the availability of funding from other federal, state, local and private sources as well as support for services financed by private non-profit organizations such as the United Way, American Red Cross, and other charitable organizations in the wake of an act of terrorism or mass violence. In addition, funding amounts may be affected by the duration of the response. If amounts awarded are not expended by the end of the grant period, they must be returned to OVC for deobligation in accordance with the applicable provisions of the *OJP Financial Guide* and Section 1402(e)of VOCA.

J. Grant Period

The grant period for funding is negotiable within the parameters outlined in VOCA. Because of the nature of this funding program, OVC will not provide long-term funding to support a single terrorist or mass violence event, except for criminal justice support grants when an investigation and prosecution are prolonged. Specific time frames have been identified for each type of assistance. However, if special circumstances exist, funding and other assistance may be provided for an extended period of time, as determined by the OVC Director based upon justification provided by the applicant.

K. Requests for Reconsideration

The OVC Director may deny a request for funding, if the applicant fails to document the need for federal funds, if the purposes for which funding is being sought fall outside the statutory authority for the use of these funds, or if funding is unavailable, or for other reasons deemed appropriate by the OVC Director. Applicants may request reconsideration of the request based on additional information, changes in the circumstances, or the withdrawal or termination of funding from other sources. Requests for reconsideration should be sent to the OVC Director and should include the basis for

reconsideration of the initial request. The OVC Director will review the request and render a decision within 5 business days of the submission. The OVC Director may request additional information from the applicant or recommend alternative support from OVC such as technical assistance in lieu of direct funding.

L. Federal Monitoring and Oversight

Recipients of funds are subject to periodic reviews of financial and service delivery records and procedures by the Office of the Comptroller, the General Accounting Office, the DOJ Office of the Inspector General, OJP's Office of Civil Rights Compliance, or OVC. Recipients must provide authorized representatives with access to examine all records, books, papers, case files, or other documents related to the expenditure of funds received under this grant program.

M. Suspension and Termination of Funding

If, after notice, OVC finds that the recipient has failed to comply substantially with VOCA, including its prohibitions of discrimination on the basis of race, color, religion, national origin, handicap, or sex, the *OJP Financial Guide* (effective edition), the terms outlined in the application or award document, the final Guidelines, or any implementing regulation or requirement, the OVC Director may suspend or terminate funding to the recipient agency and/or take other appropriate action. Under the procedures of 28 CFR Part 18, recipients may request a hearing on the justification for the suspension and/or termination of Emergency Reserve assistance.

N. Confidentiality and Privacy Requirements

Except as otherwise provided by federal law, pursuant to 42 U.S.C. 10604(d), no officer or employee of the Federal Government or recipients of monies under VOCA shall use or reveal any research or statistical information gathered under this program by any person, and identifiable to any specific private person, for any purpose other than the purpose for which such information was obtained. Such information, and any copy of such information, shall be immune from legal process and shall not, without the consent of the person furnishing such information, be admitted as evidence or used for any purpose in any action, suit, or other judicial, legislative, or administrative proceeding. In addition to such research or statistical information, no other records identifiable to a specific private person that are gathered by a recipient of VOCA funds for the purpose of providing victim assistance services as described in this Guideline may be released without the specific written consent of that private person, except as otherwise provided by federal law, including but not limited to Department of Justice authority to access information for auditing, monitoring, or oversight of the program. This is particularly important for victim service agencies that plan to develop victim databases containing specific victim information. These provisions are intended, among other things, to assure the confidentiality of information provided by crime victims to employees of VOCA-funded programs. There is nothing in VOCA or its legislative history to indicate that Congress intended to override or repeal, in effect, a state's existing laws governing the disclosure of information, which is supportive of VOCA's fundamental goal of helping crime victims.

VIII. Reporting Requirements

A. Financial Reporting Requirements

As a condition of receiving funding, recipients must agree to comply with the general and specific requirements of the *OJP Financial Guide,* applicable Office of Management and Budget (OMB) Circulars, and Common Rules. This includes maintenance of books and records in accordance with generally-accepted government accounting principles. Copies of the *OJP Financial Guide* may be obtained by writing the Office of Justice Programs, Office of the Comptroller, 810 7th Street, NW., Washington, DC 20531 or can be accessed at the OJP Web-site at *http://www.ojp.usdoj.gov/FinGuide/*. Note: Financial Status Reports must be submitted to the Office of the Comptroller for each calendar quarter in which the grant is active. This report is due even if no obligations or expenditures were incurred during the reporting period.

B. Program Reporting Requirements

Recipients of Emergency Reserve dollars are required to submit semiannual and final progress reports containing the following information documenting how funds were expended to respond to terrorism and mass violence:

1. Description of Services Provided

Provide a general description of the range of services provided for each type of assistance received. This should be a narrative summation of the activities and efforts supported by Emergency Reserve dollars to include a description of coordination efforts, intra- and inter-agency protocols, new services and programs established, and other large-scale activities.

Note: This information will be used to assess service needs of victims and communities following a large-scale criminal disaster.

2. Service Statistics

Provide detailed information on victims served, types of services rendered, number of victims assisted, amount of funding expended, purpose of each expenditure, e.g., hire staff, secure space, subcontract(s) for services (include the number of subcontracts, description of the activity subcontracted, the name of the contract recipient), conduct training, equipment, travel and transportation, etc.

Note: This information will be used for future revisions to these Guidelines, to inform the development of training and technical assistance by OVC, to document expenditure of funds, and to document the impact and effectiveness of the federal intervention.

3. Description of Plans for Addressing Longer Term and Unmet Needs

Describe any on-going needs of the victims and community, any unmet needs, and resources available or needed to support services once these federal funds have been exhausted.

Note: This information will be used to assess the time frames for established types of assistance, the level of funding available from OVC, to identify additional sources of funding, and to make modifications to these Guidelines, as appropriate, to meet unmet needs.

4. Evaluation/Assessment of the Effectiveness of the Response

Briefly describe findings of any assessment of the victim service strategy, victim satisfaction with services rendered, and lessons learned.

Note: This information will be used by OVC in planning future training and technical assistance activities, and to report to Congress on the effectiveness of interventions with victims in cases of terrorism or mass violence.

State agencies that administer the VOCA formula grants and receive Emergency Reserve dollars to respond to a case of terrorism or mass violence should report services and assistance rendered to victims on the state performance report, and provide a supplemental summary of the overall effort in accordance with section VIII(B)(1)(3)(4) above.

Dated: January 25, 2002.

John W. Gillis,

Director, Office for Victims of Crime.

[FR Doc. 02–2299 Filed 1–30–02; 8:45 am]

BILLING CODE 4410–10–P

Federal Register

Thursday,
January 31, 2002

Part III

Department of Justice

Office for Victims of Crime

Guidelines for the Antiterrorism and Emergency Assistance Program for Terrorism and Mass Violence Crimes; Notice

DEPARTMENT OF JUSTICE

Office for Victims of Crime

[OJP[OVC]–1309F]

Guidelines for the Antiterrorism and Emergency Assistance Program for Terrorism and Mass Violence Crimes

AGENCY: Office for Victims of Crime, Office of Justice Programs, Justice.

ACTION: Notice of final guidelines.

SUMMARY: The Office for Victims of Crime (OVC) has developed these final Guidelines to implement the victim assistance provisions contained in the Antiterrorism and Effective Death Penalty Act of 1996 (Pub. L. 104–132), the Omnibus Consolidated Appropriations Act of 1997 (Pub. L 104–208), the Victims of Trafficking and Violence Protection Act of 2000 (Pub. L. 106–386), and the Uniting and Strengthening America by Providing Appropriate Tools Required to Intercept and Obstruct Terrorism Act of 2001, Pub. L. 107–56 (hereafter referred to as the USA PATRIOT Act of 2001). The Victims of Crime Act (VOCA), 42 U.S.C. § 10603b and § 10603c, outlines the specific authority of the OVC to provide compensation and assistance to victims of acts of terrorism or mass violence within and assistance to victims of terrorism and mass violence outside the United States. Funding available through the Antiterrorism Emergency Reserve (hereafter referred to as the Emergency Reserve) is designed to provide timely relief and to help respond to immediate and on-going challenges in providing victim assistance services in the aftermath of cases of terrorism or mass violence. Funding and technical support is not provided automatically. Requested funds must supplement, not supplant, available resources. Non-federal contributions (cash or in-kind) are expected for each type of grant. Federal agencies are not expected to make a contribution. Amounts paid to victims from state funding sources to compensate victims of terrorism or mass violence may be included in a state's annual certification of payments to victims, which is the basis for matching annual federal crime victim compensation formula grants.

EFFECTIVE DATE: These final Guidelines are effective January 31, 2002, and until re-issuance by OVC.

FOR FURTHER INFORMATION CONTACT: Terrorism and International Victims Unit, Office for Victims of Crime, 810 Seventh Street, NW., Washington, DC 20531, telephone (202)307–5983.

SUPPLEMENTARY INFORMATION: VOCA provides federal financial assistance for the purpose of compensating and assisting victims of crime, to carry out a training and technical assistance program, to provide services for victims of federal crimes, to provide compensation and assistance services for victims of terrorism or mass violence, and to support fellowships and clinical internships. These final Guidelines provide specific information for the administration of funding for response to victims of terrorism or mass violence as authorized in 42 U.S.C. § 10603b and § 10603c.

Preamble to the Final Guidelines

OVC published proposed program guidelines in the **Federal Register** (FR, Vol. 66, No. 63) on April 2, 2001 for a 30-day public comment period. In addition, OVC distributed copies of the proposed guidelines to all VOCA state administrators, executive directors of national victim organizations, identified representatives in federal agencies with victim assistance responsibilities including the 93 United States Attorneys Offices, and other interested parties. In response to the notice of proposed program guidelines, OVC received 27 separate comments based on the **Federal Register** notice. In addition, comments were received from seven VOCA state victim assistance administrators at a working group meeting at their annual national conference held in Denver, Colorado. Of the written comments received from 27 individuals or organizations: Three came from special agents and medical staff at the Federal Bureau of Investigation; three from state crime victim compensation program representatives; four from state human services department divisions administering mental health programs; three from state departments of health and mental health; one from a state department of public welfare, office of mental health and substance abuse services; three from VOCA state assistance and compensation administrators, of which two came from a single state public safety agency; one from the Federal Emergency Management Agency; one from the Department of Treasury Enforcement Section; one from the Office of the Inspector General and one from the Secretary of the U.S. Department of Agriculture; one from the National Association of Crime Victim Compensation Boards; one from a VOCA state victim assistance administrator; one from Office of the Assistant Secretary of Defense, Special Operation Low Intensity Conflict Combating Terrorism Policy Support; one from the Drug Enforcement Administration; one from the Center for Mental Health Services, Emergency Services and Disaster Relief Branch, Substance Abuse and Mental Health Services Administration; and one from the Department of State, Overseas Citizens Services, Bureau of Consular Affairs.

OVC has attempted to address all of the comments and recommendations received during the public comment period. In addition, OVC has included in these final Guidelines new provisions contained in the USA PATRIOT Act of 2001 (PL 107–56) which contains a definition of ''domestic terrorism,'' expands the list of eligible applicants for funding in cases of ''domestic terrorism,'' establishes a new cap on the amount of money the OVC Director can set aside to assist victims of terrorism and mass violence, and re-titles the name of the account in which funding is set aside for these purposes as the Emergency Reserve. It also authorized the transfer of money into this account from the emergency supplemental appropriation for the September 11th disaster specifically to support services for the victims and surviving family members of this terrorist attack. In addition, OVC provided two points of clarification regarding the amount of funding available from the Emergency Reserve to a jurisdiction and clarified eligible applicants for funding based on recent inquiries following the ''September 11, 2001 attacks against America.'' The implementation of these final Guidelines will provide opportunities to broaden our understanding of the needs of victims and jurisdictions responding to terrorism or mass violence. As OVC learns from these experiences we will make the necessary adjustments to this program policy guidance.

Analysis and Summary of Comments

Overall, the comments were supportive of the direction taken by OVC in the proposed guidelines. Many respondents expressed appreciation for OVC's effort to provide structure and guidance to the field regarding funding available from the Emergency Reserve to support services and assistance to victims of terrorism or mass violence. Several respondents praised OVC for the flexibility built into the guidelines, including the application filing period and process, and timing for the different types of assistance.

In response to the comments and the September 11, 2001 attacks on America, OVC has made several additional changes in the final Guidelines. OVC

also has made formatting changes; added language to address property losses and damage and victim confidentiality and privacy; added definitions of ''victim,'' ''national of the United States,'' ''grant,'' ''cooperative agreement,'' ''reimbursable agreement,'' and ''interagency agreement;'' extended the period of time for accessing criminal justice support grants to up to 36 months; added a new subsection to address federal monitoring and oversight; simplified the application requirements; provided additional guidance regarding required program reporting; and provided specific application requirements by type of applicant agency. The comments from the field address six specific areas of the Guidelines: Coordination, pre-crisis planning, mental health interventions, application process and funding, allowable activities, and definitions. The following is a summary of the comments and PVC's response.

Coordination: Several of the respondents asked OVC to strengthen language recommending coordination among federal law enforcement and prosecution, state victim assistance administrators, and the state mental health community. In response, OVC added language to the ''coordination of effort with other public and private entities'' section of the final Guidelines recommending coordination among law enforcement, prosecution, state victim assistance and compensation programs, and the mental health community. In addition, we address this issue in the Introduction and Background section by adding a new subsection discussing pre-crisis planning.

Pre-crisis Planning: A number of respondents focused on the need to support pre-crisis planning efforts of states and other jurisdictions, and sought to secure funding for preliminary and on-going crisis planning efforts. They also recommended that the final Guidelines require states to have critical incident operations plans that identify state resources to respond to criminal mass disasters and memoranda of understanding that describe the relationship between the applicant and state mental health services.

Funding available to jurisdictions under these final Guidelines is specifically to support victim assistance services in the aftermath of criminal mass disaster. OVC strongly supports pre-crisis planning and has identified various resources available to assist states and communities in its National Directory of Victim Assistance Funding Opportunities, 2001.

Mental Health Interventions: One respondent expressed concern about the use of the term ''counseling'' and the potential for it to encourage interventions by non-qualified, non-credentialed individuals. Another respondent also suggested that the final Guidelines require states to document their inability to develop and/or identify state response resources prior to subcontracting for mental health counseling services. One respondent asked that OVC re-examine the time frames established for crisis response grants and consequence management grants to eliminate the gap in funding support for crisis counseling services and counseling and group therapy to ensure a continuum of psychological care for victims.

In response to the concern expressed regarding the term ''counseling'' and the credentials of persons providing mental health intervention, OVC has modified the language in the final Guidelines to indicate counseling and therapy that are provided by persons who meet state standards or who are supervised in accordance with state standards. In addition, we clarified this by adding two definitions: The definition of ''crisis counseling'' used in the Federal Emergency Management Agency (FEMA) regulations, and the definition of mental health counseling and care contained in OVC's Victim Assistance Program Guidelines. We believe these two additions to the final Guidelines address the concerns of the respondent with minimal federal intrusion on state decision-making.

OVC has entered into an interagency agreement with the Department of Health and Human Services' Center for Mental Health Services (CMHS), Emergency Services and Disaster Relief Branch to conduct research into currently available materials and protocols to address the immediate and longer-term mental health needs of victims of mass victimization; to prepare materials for federal law enforcement to assist victims of domestic and international terrorism and mass violence; to provide training and technical assistance to federal law enforcement on mental health care needs of victims; to assist federal law enforcement in coordinating its crisis response role with state and local agencies and community service organizations; and to develop partnerships between mental health and victim assistance disciplines at the state and local levels. This information has been added to a new subsection in the final Guidelines titled ''Support for Pre-Crisis Planning.''

With regard to the recommendation to require states to document the inability to secure state resources before subcontracting for mental health services, OVC believes the selection of service providers is best left to the standards established by the affected jurisdiction.

To address the possible gap in mental health interventions, OVC has adjusted the time range for consequence management grants to begin at the point in which crisis response grant funding terminates. Hence, the consequence management grants will now be available from nine months and up to 18 months after the terrorist or mass violence event.

Application Process and Funding: A few respondents recommended that funding available from the Emergency Reserve be retroactive to the date of the criminal event. Another respondent expressed support for a joint application for funding available from OVC and the CMHS. Two respondents asked for clarification regarding funding determinations. Specifically, they wanted to know the extent to which federal formula grant fund amounts would be factored into the funding decision, and if defined criteria will be established for making funding determinations. Another respondent asked if the range of eligible applicants could be expanded to include state criminal justice planning agencies, state and county mental health agencies, and state departments of education. A state compensation program representative asked that the application requirements be revised to establish specific supplemental information required of state compensation programs and to eliminate additional application certifications for states that receive formula grant funding from OVC to support victims. In addition, the respondent requested that OVC eliminate the requirement that ''recovered'' funds be used to assist other victims of the ''specific act of terrorism or mass violence for which Emergency Reserve dollars were awarded.''

Next, a respondent recommended that application requirements be consolidated into one section of the final Guidelines and specific application requirements be identified by the type of applicant. Finally, a respondent asked for clarification regarding the time limit in which an application may be filed noting that ''a state may initially have funds available and believe they are adequate; however future events may deplete resources.''

In response to these recommendations, OVC has made the following changes in the final Guidelines. OVC added language under the section describing the application

process that provides for pre-agreement costs retroactive to the date of the mass casualty event. Regarding the recommendation for a joint application for funding available from CMHS and OVC, we have added language to the coordination section which indicates that OVC may elect in some cases to transfer funds to other federal agencies with disaster relief responsibilities to support victim assistance interventions, including mental health counseling and care. To clarify the funding decision process, we added to the definition section of the final Guidelines the term ''undue financial hardship'' and provided additional guidance regarding the criterion for making such determinations. The USA PATRIOT Act of 2001 expanded the list of eligible recipients for funding in cases of terrorism within the United States to include not only eligible state crime victim compensation and assistance programs, but also victim service organizations, public agencies—federal, state, and local governments, and non-governmental organizations that provide assistance to victims. Funding to foreign governments is still prohibited.

In response to the three requests affecting state compensation programs, the final Guidelines have been modified to provide specific guidance regarding supplemental application information required from crime victim compensation programs. OVC has elected to retain the language requiring that funds recovered through state subrogation provisions be used to compensate other victims of the same terrorist or mass violence act for which they were originally awarded. Additional language has been added requiring state compensation programs and other recipients of funds to return any remaining funds at the end of the grant to OVC for deobligation and deposit into the Emergency Reserve. OVC is unable to establish a blanket certification for funding received from different account sources. Hence, no change has been made to the certification requirements. OVC did not establish an application deadline precisely for the reasons cited by the respondent. The period of time that elapses between the submission of an application and the catastrophic event does affect the type of grant assistance an applicant can request, i.e., OVC will not approve an application submitted 24 months after the event for a crisis response grant. Clarification regarding the time frame for application submission is provided in the section of the final Guidelines titled ''Application Processing and Turnaround Time.'' Finally, OVC has consolidated all the application requirements under section VII of the final Guidelines and identified the specific application requirements based on the type of agency/organization requesting funding support.

Allowable Activities: One respondent asked that ''direct (victim) outreach'' be identified as an allowable activity to ensure that the largest number of victims are reached following a terrorism or mass violence event. Another respondent acknowledged the need for prolonged victim assistance interventions based on the length of time it often takes to arrest the perpetrator(s) and bring him/her to trial. One respondent asked that the pool of eligible recipients be expanded to include emergency responders. Another respondent suggested that the allowable activities under the consequence management assistance grants include automated informational telephone service, and Attorney Advisor positions to address questions from victims about criminal proceedings.

Direct victim outreach is an allowable activity. The list of activities supportable with Emergency Reserve dollars was not meant to be exhaustive. Thus, OVC added a statement that ''[f]unding for services and other support may include, but is not limited to * * *''. The list of eligible activities outlined in the final Guidelines is intended to provide general guidance regarding the use of funds. We have added outreach and awareness to the list and language indicating that activities that are deemed necessary and essential to the provision of services may be funded with Emergency Reserve dollars. We also added automated informational telephone services to the list of allowable activities under the consequence management, crisis response, and criminal justice support grants, and Attorney Advisor and victim advocate personnel as an allowable cost under criminal justice support grants. We do not offer specific guidance regarding the approach for reaching victims or delivering services recognizing that these types of decisions may depend upon specific circumstances and are best left to the responding jurisdiction.

Finally, OVC added language which specifically identifies individuals in direct proximity to the crime who may have been traumatized by the criminal event, including emergency response personnel, and included a definition of ''victim'' in the definition section of the final Guidelines.

A number of states suggested that OVC include among the allowable costs administrative costs deemed necessary and essential to the delivery of services. In response, OVC included in the allowable cost section of these final Guidelines the language, ''authorizing use of a limited amount of available funding, as agreed upon by OVC and the applicant, for administrative purposes.'' (See Section VI.)

Definitions: A respondent requested that the definition of mass violence be expanded to acknowledge specifically the increased financial burden that state crime victim compensation programs may experience as a result of a criminal mass disaster. Another respondent asked that the term ''family members'' be defined to be responsive to the ''variability that exists in the structure and membership of contemporary families.'' Finally, one respondent asked OVC for specific guidance on the amount of the *non-federal contribution,* referred to as match.

The use of the term ''victim assistance'' was intended to be inclusive of all victim assistance efforts, including compensation for purposes of incidents of domestic terrorism or mass violence. To clarify our intent and respond to the comment received, OVC has modified the definition of mass violence to include specific reference to crime victim compensation efforts. OVC has elected not to define the term *''family member''* as we believe this term should be defined by the responding jurisdiction.

At this time, we are not prepared to establish a specific matching percentage or amount, because the level of resources available to a jurisdiction following a catastrophic event will vary greatly depending upon a range of issues, e.g., amount of public support, funding available for non-profit organizations, funding available from other federal agencies. No specific match percentage or dollar amount has been established for this program. However, non-federal contributions (cash or in-kind) are expected. OVC clarified this in the ''Definitions'' section under the term ''in-kind support/contribution.''

Final Guidelines

These final Guidelines incorporate recommendations received from the field during the public comment period on the proposed guidelines, and amendments to VOCA contained in the USA PATRIOT Act of 2001. The final Guidelines are organized as follows:

I. Final Program Guidelines
II. Introduction and Background
III. Statutory Language and Definitions
IV. Source of Funding
V. Types of Assistance

VI. Allowable Activities and Costs
VII. Accessing the Antiterrorism and Emergency Reserve
VIII. Reporting Requirements

I. Final Program Guidelines

A. Authority

42 U.S.C. § 10604 provides authority to the Director of OVC to establish rules, regulations, guidelines and procedures consistent with the program oversight and implementation responsibilities of the Director. OVC is publishing these final Guidelines for implementation of its authority under the USA PATRIOT Act of 2001, Antiterrorism and Effective Death Penalty of 1996, and the Victims of Trafficking and Violence Protection Act of 2000. These final Guidelines apply only to OVC's efforts to provide funding for victim compensation and assistance services in cases of terrorism and mass violence occurring within, and for victim assistance services in cases of terrorism and mass violence occurring outside, the United States. OVC will issue a separate set of Guidelines to implement the new International Terrorism Victim Compensation Program authorized by the Victims of Trafficking and Violence Protection Act of 2000 (Pub. L. 106–386).

This program is designed to supplement the available resources and services of entities responding to acts of terrorism or mass violence. Thus, Emergency Reserve support may be granted if needed services cannot be adequately provided with existing resources, or if the provision of services and assistance will result in an undue financial hardship on the jurisdiction's ability to respond to crime victims in a comprehensive and timely manner or impede the jurisdiction's ability to respond to other victims of crime. OVC works with several federal agencies such as the Federal Emergency Management Agency, the Department of Health and Human Services' CMHS, the Department of Education, the Department of State as well as others to make available their respective expertise and to maximize federal funding through interagency coordination to assist crime victims.

II. Introduction and Background

A. OVC Mission and Purpose

OVC was created by the U.S. Department of Justice in 1983 and formally established by Congress in 1988 through an amendment to the of 1984 (42 U.S.C. 10601) (VOCA). OVC's mission is to enhance the nation's capacity to assist victims of crime and to provide leadership in changing attitudes, policies, and practices to promote justice and healing for all victims of crime. OVC accomplishes its mission in a variety of ways: administering the Crime Victims Fund and the Emergency Reserve account; supporting direct services; providing training programs; sponsoring demonstration and evaluation projects with national and international impact; publishing and disseminating materials that highlight promising practices in the effective support of crime victims that can be replicated throughout the country and worldwide; and sponsoring fellowships and clinical internships. Also, OVC is in the process of establishing a compensation program for victims of international terrorism.

OVC works with international, national, tribal, state, military, and local victim assistance and criminal justice agencies, as well as other professional organizations to promote fundamental rights and comprehensive services for crime victims. The largest amount of OVC funding is provided to state agencies designated by the governor to administer programs to assist crime victims—crime victim compensation and victim assistance. OVC is not only a grant funding agency, but also advocates for the fair treatment of crime victims, develops policy and provides technical assistance to states, localities, and other federal agencies on effective responses to crime victims, and supports public awareness and education on critical victim issues (42 U.S.C. 10604 and 10605).

OVC monitors federal agency compliance with federal statutes and guidelines dictating the fair treatment of crime victims, and prepares an annual compliance report for the Attorney General as well as periodically updates the Attorney General Guidelines for Victim and Witness Assistance. OVC enters into interagency agreements and memoranda of understanding, offers technical assistance through expert consultants, and forms and leads working groups to address issues that have an impact on crime victims. In addition, OVC provides funding to support services to people victimized on tribal or federal lands, such as military bases and national parks. Finally, OVC provides emergency funds to federal agencies with victim responsibilities to assist victims of federal crime when no other resources are available.

B. Statement About Terrorism and Mass Violence

Violent and unexpected acts of terrorism and criminal mass violence may leave victims with serious physical and emotional wounds. Nothing in life prepares people for the horror of an act of terrorism or mass violence that robs them of their sense of security and in some instances a loved one. Victims of violent crime experience a range of needs—physical, financial, emotional, and legal. Victims are entitled by law in the United States to certain types of information and support services. While victims of terrorism have much in common with other violent crime victims and with disaster victims, they appear to experience higher levels of distress, in part due to the magnitude and scope of such traumatic events. Terrorism and mass violence may involve murders that are committed by more than one person, multiple victims, and a greater degree of violence than other criminal acts. In addition, the methods of targeting victims can contribute to the trauma and anxiety victims feel. Terrorist acts can be either random or specific. In the case of the Oklahoma City bombing, Federal Government employees were the targets. In the case of the school shooting in Littleton, Colorado at Columbine High School, students were the targets, resulting in 15 fatalities (including the gunmen) and numerous injuries. Terrorism and mass violence may place people at risk for significant physical and long-term psychological injuries. Like other victims of violent crime, victims of terrorism and mass violence need help in dealing with the crisis created by the event, in stabilizing their lives, and in understanding and participating in the criminal justice process—whether there is an arrest and trial soon after the criminal act or an arrest and trial are delayed for years.

International terrorist attacks can involve victims and survivors from many different countries and different states within the United States, and in foreign countries. The local government infrastructure and resources of non-government organizations vary considerably in foreign countries. Thus, the ability to respond to a terrorist or mass violence incident and to provide crisis intervention and services to victims abroad also varies. In addition, care givers are sometimes unable to intervene effectively due to language, legal, or cultural barriers. The efforts, services, or benefits of several federal agencies and programs, as well as state victim assistance programs and non-government organizations may be involved and must be coordinated. Further, victims abroad may need services or incur expenses that are not traditionally provided by states or the Federal Government. OVC works with federal, state, and local agencies as well

as international organizations to establish comprehensive, appropriate, and consistent services for these victims when terrorism and mass violence occur outside of the United States.

C. Support for Pre-Crisis Planning

OVC strongly supports pre-crisis planning as a means of assuring that jurisdictions have identified key personnel, available resources, and necessary protocols required for a comprehensive and effective response to criminal mass casualty crimes. OVC has supported several initiatives to assist interested jurisdictions with pre-crisis planning efforts. These initiatives include: promoting the development of community-based, multi-disciplinary, interagency assessment and planning processes for responding to cases of terrorism and mass violence; the design, development and implementation of long-range plans for establishing formal collaborative efforts involving victim service providers, law enforcement, fire and rescue, and other emergency response agencies; the use of self-assessment and planning tools, protocols for coordination and collaboration of victim services; the integration of victim services into incident command structures; and training for crisis response implementation teams to help with problem-solving, working cooperatively in a multi-disciplinary environment, designing and developing of interagency protocols, and skill-based training to allow teams to work together.

OVC has also supported the examination of materials and protocols to address the immediate and longer-term mental health needs of victims of terrorism and mass violence; the preparation of materials for federal law enforcement to assist victims of domestic and international terrorism and mass violence; the development of training and technical assistance to federal law enforcement on mental health care needs of victims, techniques to assist federal law enforcement in coordinating its crisis response role with state and local agencies and community service organizations; and the development of partnerships between mental health and victim assistance disciplines at the state and local levels. Although funding available under these final Guidelines is intended to assist jurisdictions in the aftermath of a terrorist event or mass violence incident, other resources and assistance are available from OVC to assist with pre-crisis planning.

Jurisdictions interested in crisis response planning are encouraged to contact OVC for more information about these initiatives and other resources available to assist with their efforts.

D. Action To Address Terrorism and Mass Violence

Following the bombing of the federal office building in Oklahoma City on April 19, 1995, Congress took a number of legislative steps to authorize funding and activities to assist the bombing victims. First, they passed legislation authorizing the Director of OVC to set aside monies in an Antiterrorism and Emergency Reserve account and to make funds available to provide assistance and compensation to the victims of the bombing, to facilitate their observation and attendance in trial proceedings, and for other related expenses. Congress also amended the VOCA of 1984 [42 U.S.C. § 10603b] to provide general authority to the OVC Director to respond to other incidents of terrorism or mass violence within the United States and abroad. OVC has used the Antiterrorism and Emergency Reserve to provide funding to support the victims of the Oklahoma City bombing, the bombing of Pan Am Flight 103, the bombing of the U.S. Embassies in Kenya and Tanzania, and two cases of mass violence—the school shootings in Oregon and Colorado. Most recently this account has been used to support the federal, state, and local responses to the terrorist attacks of September 11, 2001.

In the second session of the 106th Congress, the Victims of Trafficking and Violence Protection Act of 2000 (Pub. L. 106–386) was enacted. This law provides aid for victims of terrorism and expanded OVC's authority to respond to incidents of terrorism and mass violence outside the United States. Congress authorized the OVC Director: to deposit deobligated dollars from other funded program areas into the Emergency Reserve; to expand the list of eligible applicants for assistance funding in cases of terrorism outside the United States to include victim service organizations, public agencies (including federal, state, or local governments), and non-governmental organizations that provide assistance to victims of crime; and to establish a program to compensate victims of acts of international terrorism that occur outside the United States. The USA PATRIOT Act of 2001 expanded the list of eligible recipients for funding in cases of terrorism within the United States to not only include eligible state crime victim compensation and assistance programs, but also victim service organizations, public agencies—federal, state, and local governments, and non-governmental organizations that provide assistance to victims.

E. Role of the Federal Government

In recent years, the Federal Government has been called upon to play a larger role in mitigating and responding to all types of human-caused violent events and disasters. The federal responsibility ranges from immediate disaster relief to subsequent assistance that helps victims and communities to recover from a terrorist act or mass violence incident, and to help victims participate effectively in the criminal justice process. In cases of terrorism and mass violence within the United States where requests for funding for mental health services are made, OVC may work in tandem with the Emergency Services and Disaster Relief Branch at the Center for Mental Health Services, Substance Abuse and Mental Health Services Administration (SAMHSA). Moreover, because terrorist acts are primarily federal crimes, investigated and prosecuted by federal law enforcement officials, components of the Department of Justice engaged in criminal investigative, prosecution, or correction functions have responsibilities under the *Attorney General Guidelines for Victim and Witness Assistance* related to victims' rights and services.

F. Role of State Governments

State Crime Victim Compensation Programs reimburse crime victims for out-of-pocket expenses related to their victimization such as medical expenses, mental health counseling, funeral and burial costs, and lost wages. State agencies fund a wide variety of direct assistance to victims of federal and state crimes such as crisis counseling, temporary shelter, and criminal justice advocacy. OVC works in concert with these programs to maximize the limited funding available to assist crime victims and facilitate coordination among the various responding agencies including federal law enforcement and prosecution-based victim and witness assistance staff.

G. Role of Other Public and Private Entities

Public and private sector organizations have a unique role in meeting the needs of crime victims through their various mandates and programs. Organizations like the United Way, the American Red Cross, and others offer important large-scale response to communities victimized by crime. In addition, community-based, nonprofit victim assistance programs provide a wide range of vital services to victims of crime that complement

assistance available from other public and private agencies.

III. Statutory Language and Definitions for This Program

A. Victims of Crime Act and Amendments

The Antiterrorism and Effective Death Penalty Act of 1996 gave OVC the authority to establish and access the Emergency Reserve account in terrorism and mass violence cases. The Act amended the VOCA adding a new provision, 42 U.S.C. 10603b, which covers terrorism or mass violence occurring either within or outside the United States. The Victims of Trafficking and Violence Protection Act of 2000 expanded OVC's authority under 42 U.S.C. 10603b(a) to authorize the OVC Director to provide comprehensive and timely assistance to victims of terrorism occurring outside the United States. The USA PATRIOT Act of 2001 (Pub. L. 107–56) established a definition of ''domestic terrorism,'' expanded the list of eligible applicants for funding in cases of ''domestic terrorism,'' established a new cap on the amount of money the OVC Director can set aside to assist victims of terrorism and mass violence, and re-titled the name of the account in which funding is set aside for these purposes as the Emergency Reserve. It also authorized the transfer of money into this account from the emergency supplemental appropriation for the September 11th attacks on America, specifically to support services for the victims and surviving family members of this terrorist attack.

OVC may provide funding for emergency relief to benefit victims, including crisis response efforts, assistance, training, and technical assistance, and on-going assistance including during any investigation or prosecution. Such funding may be provided to states, victim service organizations, public agencies (including federal, state, or local governments), and non-governmental organizations that provide assistance to victims of crime.

In cases of terrorism or mass violence occurring within the United States, 42 U.S.C. 10603b(b) authorizes OVC to provide emergency relief, including crisis response efforts, assistance, training, and technical assistance for the benefit of victims of terrorist acts or mass violence. Funding may be awarded to eligible state crime victim compensation and assistance programs, victim service organizations, public agencies—federal, state, and local governments, and non-governmental organizations that provide assistance to victims.

B. Definitions

1. Terrorism Occurring Within the United States

For the purposes of the Antiterrorism and Emergency Assistance Program, ''terrorism occurring within the United States'' is defined by the term ''domestic terrorism'' found in 18 U.S.C. 2331, as amended. (As of the publication of these Guidelines, 18 U.S.C. 2331 reads as follows: ''domestic terrorism'' means activities that—(A) Involve acts dangerous to human life that are a violation of the criminal laws of the United States or of any State, (B) appear to be intended—(i) to intimidate or coerce a civilian population; (ii) to influence the policy of a government by intimidation or coercion; or (iii) to affect the conduct of a government by mass destruction, assassination or kidnaping; and (c) occur primarily within the territorial jurisdiction of the United States.'' (18 U.S.C. 2331).

2. Terrorism Occurring Outside the United States

''Terrorism occurring outside the United States'' is defined by the term ''international terrorism'' found in 18 U.S.C. § 2331, as amended. (As of the publication of these Guidelines, 18 U.S.C. § 2331 reads as follows: ''The term 'international terrorism' means activities that—(A) Involve violent acts or acts dangerous to human life that are a violation of the criminal laws of the United States or of any State, or that would be a criminal violation if committed within the jurisdiction of the United States or of any State; (B) appear to be intended—(i) to intimidate or coerce a civilian population; (ii) to influence the policy of a government by intimidation or coercion; or (iii) to affect the conduct of a government by mass destruction, assassination or kidnaping; and (C) occur primarily outside the territorial jurisdiction of the United States, or transcend national boundaries in terms of the means by which they are accomplished, the persons they appear intended to intimidate or coerce, or the locale in which their perpetrators operate or seek asylum.'' (18 U.S.C. 2331)).

3. Mass Violence Occurring Within or Outside the United States

The term ''mass violence'' is not defined in VOCA or any statute amending VOCA, nor is it defined in the U.S. Criminal Code. Thus, OVC has developed a working definition of this term. The term ''mass violence'' herein means an intentional violent criminal act, for which a formal investigation has been opened by the Federal Bureau of Investigation or other law enforcement agency, that results in physical, emotional or psychological injury to a sufficiently large number of people as to significantly increase the burden of victim assistance and compensation for the responding jurisdiction as determined by the OVC Director.

4. Emergency Relief

''Emergency relief'' means those activities intended to address a need which, if left unattended, may result in significant consequences for victims. *Emergency relief* may include assistance required immediately following the crime as well as activities needed during the investigation and prosecution of an act of terrorism or mass violence.

5. Supplantation

''Supplantation'' means to deliberately reduce state or local funds because of the availability of federal funds. For example, when state funds are appropriated for a stated purpose and federal funds are awarded for that same purpose, the state replaces its state funds with federal funds, thereby reducing the total amount available for the stated purpose (See OJP Financial Guide available on the OJP homepage at www.ojp.usdoj.gov/).

6. In-Kind Support/Contribution

''In-kind support/contribution'' includes, but is not limited to, the valuation of in-kind services. ''In-kind'' is the value of something received or provided that does not have a cost associated with it. For example, if an in-kind match is permitted by law (other than cash payments), then the value of donated services could be used to comply with the match requirement. (OJP Financial Guide).

Note: No specific matching percentage or dollar amount has been established for this program. However, non-federal contributions (cash or in-kind) are expected from the applicant.

7. Crisis Counseling

''Crisis counseling'' means the application of individual and group treatment procedures that are designed to ameliorate mental and emotional crises and any resulting psychological and behavioral conditions stemming from a major disaster or its aftermath.

8. Mental Health Counseling and Care

''Mental health counseling and care'' means the assessment, diagnosis, and treatment of an individual's mental and

emotional functioning. Mental health counseling and care must be provided by a person, or under the supervision of a person, who meets state standards to provide these services.

9. Undue Financial Hardship

''Undue financial hardship'' is one basis upon which OVC will make funding determinations. For the purpose of these final Guidelines, ''*undue financial hardship*'' means the unanticipated allocation of substantial financial resources that adversely affect the ability to fund general services for victims.

10. Property Damage

''Property damage'' is damage to material goods, but does not include damage to prosthetic devices, eyeglasses, other corrective lenses, dental devices, or other medically-related devices. ''Property loss'' is destruction of material goods or the physical loss of money, stocks, bonds, etc.

11. Victim (International)

In cases of international terrorism and mass violence, the term ''victim'' has the same meaning as ''victim'' in 42 U.S.C. § 10603b, as amended, (As of the publication of these Guidelines, 42 U.S.C. 10603b reads as follows: ''the term ''victim''—(A) means a person who is a national of the United States or an officer or an employee of the United States Government who is injured or killed as a result of a terrorist act or mass violence occurring outside the United States; and (B) in the case of a person * * * who is less than 18 years of age, incompetent, incapacitated, or deceased, includes a family member or legal guardian of that person.'' [42 U.S.C. § 10603b]), except that (a) it also includes individuals who are likely to suffer traumatic effects of the incident, for example people in direct proximity to the crime and emergency responders; and (b) notwithstanding any other provision hereof, in no event shall an individual who is criminally culpable for the terrorist act or mass violence receive any assistance under this section, either directly or on behalf of a victim.

12. Victim (Domestic)

In cases of terrorism and mass violence within the United States, the term ''victim'' has the same meaning as ''victim'' in 42 USCA 10603c, as amended. (As of the publication of these Guidelines, 42 U.S.C. 10603c defines ''victim'' as a person who has suffered direct physical or emotional harm as a result of the commission of a crime.) Because of the nature of terrorist incidents, the term victim will also include individuals who are likely to suffer traumatic effects of the incident, for example people in direct proximity to the crime and emergency responders. In addition, OVC requires that consistent with other portions of VOCA, no individual who is criminally culpable for the terrorist act or mass violence may receive either assistance or compensation either directly or on behalf of a victim.

13. National of the United States

The term ''national of the United States'' is defined by the term ''national of the United States'' found in section 101(a) of the Immigration and Nationality Act, 8 U.S.C. 1101(a), as amended. (As of the publication of these Guidelines, 8 U.S.C. 1101 reads as follows: ''national of the United States'' means (A) a citizen of the United States, or (B) a person who, though not a citizen of the United States, owes permanent allegiance to the United States.'' [8 U.S.C. 1101]) A ''person who owes permanent allegiance to the United States'' includes residents of the American Samoa and Swain Island, outlying possessions of the United States, who have not been granted the privilege of citizenship.

14. Grant

The term ''grant'' means an award of federal funds to states, units of local government, or private organizations at the discretion of the awarding agency or on the basis of a formula. Grants are used to support a public purpose. Under these final Guidelines, VOCA victim assistance and compensation programs and other state and local governmental agencies will be awarded funds in the form of a grant.

15. Reimbursable Agreement

The term ''reimbursable agreement'' means a written instrument of agreement for services or goods made between the Office of Justice Programs (OJP) or one of its bureaus or offices and another federal agency or a state or local government agency. Each Reimbursable Agreement entered into by an OJP bureau/office to reimburse another agency will result in the establishment of an obligation. Such funding arrangements are negotiated by the entities involved. Under these final Guidelines, the transfer of funds to federal agencies will be in the form of a reimbursable agreement.

16. Cooperative Agreement

The term ''cooperative agreement'' means an award to states, units of local government or private organizations at the discretion of the awarding agency. Cooperative agreements are utilized when substantial involvement is anticipated between the awarding agency and the recipient during the performance of the contemplated activity. Under these final Guidelines, funding awarded to nonprofit organizations will be made in the form of a cooperative agreement.

17. Foreign Power

(a) ''Foreign power'' means—

(1) A foreign government or any component thereof, whether or not recognized by the United States;

(2) Faction of a foreign nation or nations, not substantially composed of United States persons;

(3) An entity that is openly acknowledged by a foreign government or governments to be directed and controlled by such foreign government or governments;

(4) A group engaged in international terrorism or activities in preparation thereof;

(5) A foreign-based political organization, not substantially composed of United States persons; or

(6) An entity that is directed and controlled by a foreign government or governments. (See 50 U.S.C. § 1801(a).)

IV. Source of Funding

A. Crime Victims Fund

A major responsibility of OVC is to administer the Crime Victims Fund, which is derived, not from tax dollars, but from fines and penalties paid by federal criminal offenders, and gifts, donations, and bequests from private entities or individuals. A large percentage of the money collected each year is distributed to states to assist in funding their victim assistance and compensation programs. These programs are the lifeline services that help many victims to cope with the devastation of crime. The Fund also supports OVC's training, technical assistance and demonstration efforts, direct services to victims of federal crime, program evaluation and compliance efforts, and fellowships and clinical internships.

B. Antiterrorism Emergency Reserve

The OVC Director is authorized to hold certain amounts from of the Crime Victims Fund in reserve for three purposes—(i) To support compensation and assistance services for victims of domestic terrorism or mass violence, (ii) to support assistance services to victims of international terrorism, and (iii) to fund directly an International Terrorism

Victim Compensation Program. Thus far this money has been used to assist the victims of the September 11, 2001 terrorist attacks on America, Oklahoma City bombing, the East Africa embassy bombings, Pan Am Flight 103 bombing, and school shootings in Oregon and Colorado. In the September 11th attacks on America, and the Oklahoma City and Pan Am Flight 103 bombing cases, Congress enacted special legislation that expanded OVC's authority to fund activities beyond the parameters of its previous governing statute.

V. Types of Assistance

There are five types of support available from OVC to respond to terrorism and mass violence: (a) Crisis response grants; (b) consequence management grants; (c) criminal justice support grants; (d) compensation grants; and e) technical assistance/training services. Jurisdictions are not limited to receiving only one type of assistance. Funding and other assistance may be provided for an extended period of time if a justification is provided by the applicant. The established time frames for funding are flexible and not intended to prohibit the submission of applications at a different time, if warranted.

Justification for an extension must meet the *''emergency relief''* requirement, as determined by the OVC Director and the Office of General Counsel. Funding may be provided for each type of assistance available; however, coordination among the applicants is expected and a separate application must be submitted for each. OVC does not provide funding directly to individual crime victims, except compensation benefits to qualified applicants in the case of international terrorism.

A. *Crisis Response Grants (emergency/short-term, up to 9 months)* are designed to provide resources to help victims rebuild adaptive capacities, decrease stressors, and to reduce symptoms of trauma immediately following the terrorism or mass violence event. Requests for *crisis response funding* must be made as soon as practicable following the terrorism or mass violence event.

B. *Consequence Management Grants (on-going/longer-term, up to 18 months)* are designed to provide supplemental resources to help victims adapt to the trauma event and to restore victims' sense of equilibrium.

C. *Criminal Justice Support Grants (on-going/longer-term, up to 36 months)* are designed to facilitate victim participation in an investigation or prosecution directly related to the terrorist and mass violence event. The nature of the support being requested is a factor in determining the amount as well as the extent to which the response involves activities that will result in permanent improvements in how victims access and participate in criminal justice proceedings such as the development of protocols and systems to enhance victim notification.

Note: It is within the OVC Director's authority to approve or deny requests for support for subsequent or parallel state criminal investigations and prosecutions.

D. *Crime Victim Compensation Grants* are designed to provide supplemental funding to a state crime victim compensation program that reimburses victims for out-of-pocket expenses related to their victimization in cases of terrorism or mass violence occurring within the United States. Grant funds may be used to pay claims to victims for costs that include, but are not limited to, medical and mental health counseling costs, funeral and burial costs, and lost wages. (See Section VI for other allowable activities and costs.) Emergency Reserve funds may not be used to cover property damage or property loss. (See ''Definitions'' section of these Guidelines.) OVC may provide funding to other organizations to cover expenses not traditionally covered by state crime victim compensation programs. OVC will coordinate such awards with state crime victim compensation programs.

In the event that a state recovers expenses on behalf of a victim from a collateral source, the amount recovered must be used either (1) to assist other victims of the same crime for which funds were awarded, or (2) returned to OVC and deobligated in accordance with the applicable provisions of the *OJP Financial Guide* and Section 1402(e)of VOCA.

E. *Request for Training and Technical Assistance.* A request for training or technical assistance may be made any time during the aftermath of a terrorism or mass violence event and during the criminal justice investigation or prosecution. Technical assistance is principally available to help federal, state, and local authorities identify victim needs and needed resources, to coordinate services to victims, to develop short- and longer-term strategies for responding, and for other purposes deemed appropriate by the OVC Director. While no direct funding is available, OVC may the use the Emergency Reserve to support the expenses of experts to meet the training and technical assistance needs of applicants.

VI. Allowable Activities and Costs

The range of services that OVC will support for victims of terrorism and mass violence is outlined in this section. Allowable expenses are based, in part, on activities authorized in guidelines established for OVC's Federal Emergency Assistance Fund and VOCA Victim Assistance and Compensation Program Guidelines. In addition, OVC has relied upon the requirements of the *Attorney General Guidelines for Victim and Witness Assistance* to afford rights and provide services to federal crime victims to guide the development of these final Guidelines.

Services identified in these final Guidelines are intended to complement services that are available from other agencies and organizations. Funding is expected to support a ''base'' level of assistance to the victims of the terrorism or mass violence event. Funding may be used to support activities that are deemed necessary and essential to the provision of services, including a limited amount, as agreed upon by OVC and the applicant, for administrative purposes. These services include but are not limited to the following:

A. Crisis Response Assistance

Assistance securing compensation
Automated informational telephone services
Child and dependent care
Coordination
Crisis counseling
Emergency food, housing, and clothing
Emergency travel and transportation
Employer and creditor intervention
Outreach, awareness, and education
Toll-free telephone lines
Victim/Community needs assessment (limited)

B. Consequence Management Assistance

Counseling and group therapy
Case management
Employer and creditor intervention
Victim informational websites
Rehabilitation expenses
Vocational rehabilitation
Temporary housing, per diem, and relocation
Emergency travel or transportation
Victim/Community needs assessment (expanded)
Outreach, awareness, and education
Automated informational telephone services
Coordination

C. Criminal Justice Support Assistance

Assistance with victim impact statements
Attorney advisor and victim advocate personnel cost
Automated informational telephone services

Case briefings by investigators, prosecutors
Coordination
Criminal justice notification
Information and Referral
Outreach, awareness, and education
Support victim participation in criminal justice proceedings, e.g., travel/transportation to court or closed-circuit viewing facility, counseling, advocacy, etc.
Victim/Community needs assessment
Victim Identification
Victim Information (printed and electronic)

D. Crime Victim Compensation (in cases of domestic terrorism)

Autopsy, refrigeration, and transport of body
Coordination
Co-payments required by insurance programs
Emergency travel and/or transportation costs
Long-distance telephone costs to contact family members
Medical expenses including non-medical attendant services, rehabilitation and physical therapy diagnostic examinations, prosthetic devices, eyeglasses
Outpatient mental health treatment/therapy
Outreach, awareness, and education

Note: Allowable activities in one category may be necessary and authorized in another funding category.

E. Training and Technical Assistance

Conducting needs assessment and planning
Defining the mental health needs of victims
Identifying strategies for integrating victim assistance in the incident command structure
Improving coordination and collaboration between responding agencies/organizations
Linking mental health services and victim assistance services
Working cooperatively in a multi-disciplinary environment

VII. Accessing Antiterrorism Emergency Reserve

A. Eligible Applicants

Applicants eligible for funding include state victim assistance and victim compensation programs, public agencies including federal, state, and local governments, and victim service and non-governmental organizations. In cases within the United States, applications will be accepted only from the jurisdiction in which the crime occurred unless a statute establishes a special authorization and appropriation supporting allocations to other jurisdictions, or a compelling justification can be provided to the OVC Director supporting requests from other jurisdictions.

It is the responsibility of the jurisdiction where the crime occurred to conduct the necessary outreach and make services and/or funding available to all victims of crimes which occur within their boundaries. However, if a substantial number of victims/surviving family members reside in another jurisdiction, in cases when the applicant is a state agency, the grantee may sub-award Antiterrorism Emergency Reserve dollars received from OVC to another jurisdiction/eligible state agency when doing so is an efficient and cost-effective way to provide services to victims/survivors who reside in another state.

OVC will not provide funding to a foreign power or domestic organization operated for the purpose of engaging in any significant political or lobbying activities or to individual crime victims.

The funded applicant may subcontract Antiterrorism Emergency Reserve dollars to another organization with the concurrence of OVC. Subcontracting entities must meet the eligibility criteria and abide by the statutory provisions contained in VOCA, the Antiterrorism and Effective Death Penalty Act, the Victims of Trafficking and Violence Protection Act, the USA PATRIOT Act of 2001, and the requirements set forth in these final Guidelines.

B. Eligible Recipients of Benefits and Services

In cases abroad, eligible recipients include victims who are nationals of the United States or an officer or employee of the United States Government as defined in section III(B), (11) of these final Guidelines. Unless otherwise indicated, these individuals are generally eligible for assistance from federally-funded victim assistance programs. In cases of terrorism and mass violence within the United States, eligible recipients of compensation and assistance include victims as defined in section III (B)(12) of these final Guidelines, including victims of other crimes where a causal relationship to the terrorist incident can be established.

C. Coordination of Effort With Other Public and Private Entities

No single agency can effectively respond to and meet all of the short- and longer-term needs of victims of a terrorist or mass violence incident. In most instances within the United States the resources of multiple agencies (local, state, and federal) are involved. In developing these final Guidelines, OVC has drawn heavily upon the experiences of agencies such as the Federal Emergency Management Agency and the Center for Mental Health Services, both of which have responsibility for providing assistance to communities following disasters within the United States. OVC will work closely with applicants to ensure the most appropriate utilization of resources. Applicants should identify other public and private entities that have been consulted in the process of preparing the application and describe how the proposed services fit within the overall scheme for addressing victim needs.

OVC will consider the level of coordination and the availability of resources from other federal, state, local, and private entities in making funding determinations. Extensive coordination with agencies such as state emergency preparedness, state mental health, local chapters of the American Red Cross and the United Way, and between federal and state law enforcement and prosecutor personnel is a necessary component of an effective response to terrorism and mass violence and a criterion upon which OVC will base its funding decision.

In cases of terrorism and mass violence abroad, the short-term and subsequent responses may involve resources of numerous federal and state agencies and non-governmental organizations, depending upon the nature of the incident and location. Coordination of efforts in these cases is critical and OVC will work closely with applicants to ensure the most appropriate utilization of resources.

D. Areas of Special Concern

In the development of a request for assistance, the applicant must be cognizant of special concerns, such as applicable state or federal victims' rights laws and requirements, and the needs of populations that are especially vulnerable, such as children, the elderly, and people with disabilities, and people of different ethnic backgrounds.

E. Application Process

An application for funding should be submitted to the OVC Director as soon as appropriate following a terrorist or mass violence event by the appropriate state or federal official, or private victim service or non-governmental organization. OVC has developed an application kit for Antiterrorism and Emergency Reserve dollars. The kit is

available on the OVC Web-site at *www.ojp.usdoj.gov/ovc* at the ''grants and funding'' page and will be mailed or faxed to potential applicants upon request.

There are two factors that determine the application submission requirements: (1) The applicant status, i.e., government agency (federal, state, or local), non-governmental organization, or victim service organization; and (2) the type of support requested, i.e., crisis response, consequence management, criminal justice, victim compensation, and/or technical assistance (no direct funding). Application requirements are listed below.

Application Requirements for State Crime Victim Compensation Programs

Funding will be made available to state crime victim compensation programs in the form of a grant. Requests for funding from state crime victim compensation programs may be made at any time and should include: (1) A description of the qualifying crime; (2) the projected number of claims to be paid and the projected number of claimants to receive payments; (3) the state's maximum award amount by category, e.g., medical, mental health, loss wages, funeral, etc.; and (4) SF 424, Application for Federal Assistance and applicable assurances and forms. The request should also describe the range of expenses covered by the program and the amount of state funding available to cover victim claims.

Application Requirements for all Other Recipients of Funds

All other applicants seeking Emergency Reserve support are required to submit a letter of request containing the following information:

(1) Type of crime and description of the criminal event;

(2) Identification of the lead law enforcement agency conducting the investigation;

(3) Estimated number of victims affected by the crime;

(4) Description of the applicant's role in responding to the victim population since the date of the incident;

(5) Description of services that funding will support and how these efforts will complement services in place or respond to an unmet need;

(6) The amount of funding requested and the time frame for support; and

(7) Description of outreach and coordination with other public and private entities in the process of preparing the request for assistance.

In addition, applicants, except federal agencies, must submit (1) SF 424, Application for Federal Funding and applicable assurances and forms; and (2) Budget and budget narrative including a description of all other federal and non-federal contributions (cash or in-kind).

To Request Training and Technical Assistance Support

Training and technical assistance may be requested by submitting a letter describing the nature of the problem; the type of expertise or assistance needed; the duration of assistance; and the projected outcomes of the technical assistance or training.

Application Processing and Turnaround Time

It is OVC's intention to provide rapid support to assist victims of terrorism and mass violence. Upon receipt of a letter of request and application, an OVC staff person will review the request, may contact the requesting agency to clarify any ambiguities, and make a recommendation to the OVC Director regarding the funding request in accordance with OVC's internal protocol for responding to incidents of terrorism and mass violence. The applicant can expect to receive notification regarding the determination from OVC within 5 business days. The applicant will be notified via telephone, Internet, or facsimile.

A determination by the OVC Director to make funding available will be followed by a complete review of the application including an analysis and approval of the budget by the Office of the Comptroller. Funds will be available upon completion of the review and written notification and acceptance of the award.

There is no specific due date for applications. However, the type of assistance available is subject to the time frame when the application is received, i.e., an applicant who submits a request 18 months after the catastrophic event will not be eligible to receive a ''crisis response'' grant.

H. Pre-Agreement Costs

Generally, since a community may incur substantial costs immediately following a terrorist act or mass violence event, OVC may, upon request, approve costs which were incurred prior to the start date of the award. The applicant should not assume that pre-agreement costs are covered without formal notification from OVC.

I. Amount of Funding Available per Incident

The amount of funding available is decided on a case-by-case basis based on factors such as the availability of other resources, the severity of the impact, and the number of people suffering from physical, emotional, or psychological injury. OVC will not provide total (100%) reimbursement to any jurisdiction or program for activities undertaken to assist victims of terrorism or mass violence. The amount of funding made available will be influenced by the availability of funding from other federal, state, local and private sources as well as support for services financed by private non-profit organizations such as the United Way, American Red Cross, and other charitable organizations in the wake of an act of terrorism or mass violence. In addition, funding amounts may be affected by the duration of the response. If amounts awarded are not expended by the end of the grant period, they must be returned to OVC for deobligation in accordance with the applicable provisions of the *OJP Financial Guide* and Section 1402(e)of VOCA.

J. Grant Period

The grant period for funding is negotiable within the parameters outlined in VOCA. Because of the nature of this funding program, OVC will not provide long-term funding to support a single terrorist or mass violence event, except for criminal justice support grants when an investigation and prosecution are prolonged. Specific time frames have been identified for each type of assistance. However, if special circumstances exist, funding and other assistance may be provided for an extended period of time, as determined by the OVC Director based upon justification provided by the applicant.

K. Requests for Reconsideration

The OVC Director may deny a request for funding, if the applicant fails to document the need for federal funds, if the purposes for which funding is being sought fall outside the statutory authority for the use of these funds, or if funding is unavailable, or for other reasons deemed appropriate by the OVC Director. Applicants may request reconsideration of the request based on additional information, changes in the circumstances, or the withdrawal or termination of funding from other sources. Requests for reconsideration should be sent to the OVC Director and should include the basis for

reconsideration of the initial request. The OVC Director will review the request and render a decision within 5 business days of the submission. The OVC Director may request additional information from the applicant or recommend alternative support from OVC such as technical assistance in lieu of direct funding.

L. Federal Monitoring and Oversight

Recipients of funds are subject to periodic reviews of financial and service delivery records and procedures by the Office of the Comptroller, the General Accounting Office, the DOJ Office of the Inspector General, OJP's Office of Civil Rights Compliance, or OVC. Recipients must provide authorized representatives with access to examine all records, books, papers, case files, or other documents related to the expenditure of funds received under this grant program.

M. Suspension and Termination of Funding

If, after notice, OVC finds that the recipient has failed to comply substantially with VOCA, including its prohibitions of discrimination on the basis of race, color, religion, national origin, handicap, or sex, the *OJP Financial Guide* (effective edition), the terms outlined in the application or award document, the final Guidelines, or any implementing regulation or requirement, the OVC Director may suspend or terminate funding to the recipient agency and/or take other appropriate action. Under the procedures of 28 CFR Part 18, recipients may request a hearing on the justification for the suspension and/or termination of Emergency Reserve assistance.

N. Confidentiality and Privacy Requirements

Except as otherwise provided by federal law, pursuant to 42 U.S.C. 10604(d), no officer or employee of the Federal Government or recipients of monies under VOCA shall use or reveal any research or statistical information gathered under this program by any person, and identifiable to any specific private person, for any purpose other than the purpose for which such information was obtained. Such information, and any copy of such information, shall be immune from legal process and shall not, without the consent of the person furnishing such information, be admitted as evidence or used for any purpose in any action, suit, or other judicial, legislative, or administrative proceeding. In addition to such research or statistical information, no other records identifiable to a specific private person that are gathered by a recipient of VOCA funds for the purpose of providing victim assistance services as described in this Guideline may be released without the specific written consent of that private person, except as otherwise provided by federal law, including but not limited to Department of Justice authority to access information for auditing, monitoring, or oversight of the program. This is particularly important for victim service agencies that plan to develop victim databases containing specific victim information. These provisions are intended, among other things, to assure the confidentiality of information provided by crime victims to employees of VOCA-funded programs. There is nothing in VOCA or its legislative history to indicate that Congress intended to override or repeal, in effect, a state's existing laws governing the disclosure of information, which is supportive of VOCA's fundamental goal of helping crime victims.

VIII. Reporting Requirements

A. Financial Reporting Requirements

As a condition of receiving funding, recipients must agree to comply with the general and specific requirements of the *OJP Financial Guide,* applicable Office of Management and Budget (OMB) Circulars, and Common Rules. This includes maintenance of books and records in accordance with generally-accepted government accounting principles. Copies of the *OJP Financial Guide* may be obtained by writing the Office of Justice Programs, Office of the Comptroller, 810 7th Street, NW., Washington, DC 20531 or can be accessed at the OJP Web-site at *http://www.ojp.usdoj.gov/FinGuide/*. Note: Financial Status Reports must be submitted to the Office of the Comptroller for each calendar quarter in which the grant is active. This report is due even if no obligations or expenditures were incurred during the reporting period.

B. Program Reporting Requirements

Recipients of Emergency Reserve dollars are required to submit semiannual and final progress reports containing the following information documenting how funds were expended to respond to terrorism and mass violence:

1. Description of Services Provided

Provide a general description of the range of services provided for each type of assistance received. This should be a narrative summation of the activities and efforts supported by Emergency Reserve dollars to include a description of coordination efforts, intra- and inter-agency protocols, new services and programs established, and other large-scale activities.

Note: This information will be used to assess service needs of victims and communities following a large-scale criminal disaster.

2. Service Statistics

Provide detailed information on victims served, types of services rendered, number of victims assisted, amount of funding expended, purpose of each expenditure, e.g., hire staff, secure space, subcontract(s) for services (include the number of subcontracts, description of the activity subcontracted, the name of the contract recipient), conduct training, equipment, travel and transportation, etc.

Note: This information will be used for future revisions to these Guidelines, to inform the development of training and technical assistance by OVC, to document expenditure of funds, and to document the impact and effectiveness of the federal intervention.

3. Description of Plans for Addressing Longer Term and Unmet Needs

Describe any on-going needs of the victims and community, any unmet needs, and resources available or needed to support services once these federal funds have been exhausted.

Note: This information will be used to assess the time frames for established types of assistance, the level of funding available from OVC, to identify additional sources of funding, and to make modifications to these Guidelines, as appropriate, to meet unmet needs.

4. Evaluation/Assessment of the Effectiveness of the Response

Briefly describe findings of any assessment of the victim service strategy, victim satisfaction with services rendered, and lessons learned.

Note: This information will be used by OVC in planning future training and technical assistance activities, and to report to Congress on the effectiveness of interventions with victims in cases of terrorism or mass violence.

State agencies that administer the VOCA formula grants and receive Emergency Reserve dollars to respond to a case of terrorism or mass violence should report services and assistance rendered to victims on the state performance report, and provide a supplemental summary of the overall effort in accordance with section VIII(B)(1)(3)(4) above.

Dated: January 25, 2002.

John W. Gillis,

Director, Office for Victims of Crime.

[FR Doc. 02–2299 Filed 1–30–02; 8:45 am]

BILLING CODE 4410–10–P

Federal Register

Thursday,
January 31, 2002

Part IV

Department of Health and Human Services

Agency for Toxic Substances and Disease Registry

Update on the Status of the Superfund Substance-Specific Applied Research Program; Notice

DEPARTMENT OF HEALTH AND HUMAN SERVICES

Agency for Toxic Substances and Disease Registry

[ATSDR–178]

Update on the Status of the Superfund Substance-Specific Applied Research Program

AGENCY: Agency for Toxic Substances and Disease Registry (ATSDR), Department of Health and Human Services (HHS).

ACTION: Notice.

SUMMARY: This Notice provides the status of ATSDR's Superfund-mandated Substance-Specific Applied Research Program (SSARP) which was last updated in a **Federal Register** notice in 1999 (64 FR 2760). Authorized by the Comprehensive Environmental Response, Compensation, and Liability Act of 1980 (CERCLA, also known as the Superfund statute), as amended by the Superfund Amendments and Reauthorization Act of 1986 (SARA) 42 U.S.C. 9604 (i), this research program was initiated on October 17, 1991. At that time, a list of priority data needs for 38 priority hazardous substances frequently found at waste sites was announced in the **Federal Register** (56 FR 52178). The list was subsequently revised based on public comments and published in final form on November 16, 1992 (57 FR 54150).

The 38 substances, each of which is found on ATSDR's Priority List of Hazardous Substances (66 FR 54014, October 25, 2001), are aldrin/dieldrin, arsenic, benzene, beryllium, cadmium, carbon tetrachloride, chloroethane, chloroform, chromium, cyanide, p,p′-DDT,DDE,DDD, di(2-ethylhexyl) phthalate, lead, mercury, methylene chloride, nickel, polychlorinated biphenyl compounds (PCBs), polycyclic aromatic hydrocarbons (PAHs—includes 15 substances), selenium, tetrachloroethylene, toluene, trichloroethylene, vinyl chloride, and zinc.

On July 30, 1997, priority data needs for 12 additional hazardous substances frequently found at waste sites were determined and announced in the **Federal Register** (62 FR 40820). The 12 substances, each of which is included in ATSDR's Priority List of Hazardous Substances, are chlordane, 1,2-dibromo-3-chloropropane, di-n-butyl phthalate, disulfoton, endrin (includes endrin aldehyde), endosulfan (alpha-, beta-, and endosulfan sulfate), heptachlor (includes heptachlor epoxide), hexachlorobutadiene, hexachlorocyclohexane (alpha-, beta-, delta- and gamma-), manganese, methoxychlor, and toxaphene.

Recently, priority data needs for 10 additional hazardous substances frequently found at waste sites were determined and announced in the **Federal Register** (66 FR 42659). The 10 substances, each of which is included in ATSDR's Priority List of Hazardous Substances, are asbestos, benzidine, chlorinated dibenzo-p-dioxins, 1,2-dibromoethane, 1,2-dichloroethane, 1,1-dichloroethane, ethylbenzene, pentachlorophenol, 1,1,2,2-tetrachloroethane, and total xylenes. ATSDR invited the public to comment on the priority data needs for these substances during a period of 90 days. ATSDR is responding to the comments, and a final list of priority data needs will be published in the **Federal Register** in the near future.

To date, 190 priority data needs have been identified for the first 50 hazardous substances (Table 1). ATSDR fills these data needs through U.S. Environmental Protection Agency (EPA) regulatory mechanisms (test rules), private-sector voluntarism, and the direct use of CERCLA funds. Additional data needs are being addressed through collaboration with the National Toxicology Program (NTP), by ATSDR's Great Lakes Human Health Effects Research Program, and other agency programs. Currently, 101 priority data needs associated with the first 50 substances are being addressed via these mechanisms, and 62 priority data needs have been filled. Priority data needs documents describing ATSDR's rationale for prioritizing research needs for each substance are available. See **ADDRESSES** section of this Notice.

This Notice also serves as a continuous call for voluntary research proposals. Private-sector organizations may volunteer to conduct research to address specific priority data needs identified in this Notice by indicating their interest through submission of a letter of intent to ATSDR (see **ADDRESSES** section of this Notice). A Tri-Agency Superfund Applied Research Committee (TASARC) composed of scientists from ATSDR, NTP, and the EPA, will review all proposed voluntary research efforts.

DATES: ATSDR provides updates on the status of its Substance-Specific Applied Research Program approximately every 3 years. ATSDR considers the voluntary research effort to be important to the continuing implementation of the SSARP. Therefore, the agency strongly encourages private-sector organizations to volunteer at any time to conduct research to fill data needs until ATSDR announces that other research mechanisms are in place to address those specific data needs.

ADDRESSES: Private-sector organizations interested in volunteering to conduct research can write to Dr. William Cibulas, Chief, Research Implementation Branch, Division of Toxicology, ATSDR, 1600 Clifton Road, NE., Mailstop E–29, Atlanta, Georgia 30333, e-mail: wcibulas@cdc.gov. Information about pertinent ongoing or completed research that may fill priority data needs cited in this Notice should be similarly addressed.

Other Requirements: Projects that involve the collection of information from 10 or more individuals and funded by cooperative agreement will be subject to review by the Office of Management and Budget (OMB) under the Paperwork Reduction Act.

FOR FURTHER INFORMATION CONTACT: Dr. William Cibulas, Chief, Research Implementation Branch, Division of Toxicology, ATSDR, 1600 Clifton Road, NE., Mailstop E–29, Atlanta, Georgia 30333, telephone: (404) 498–0715, fax: (404) 498–0092. This notice will also be available on ATSDR's website at *http://www.atsdr.cdc.gov* or you may call the ATSDR Information Center at 1–888–422–8737.

SUPPLEMENTARY INFORMATION:

Background

CERCLA as amended by SARA (42 U.S.C. 9604(i)) requires that ATSDR (1) jointly with the EPA, develop and prioritize a list of hazardous substances found at National Priorities List (NPL) sites, (2) prepare toxicological profiles for these substances, and (3) assure the initiation of a research program to address identified data needs associated with the substances. Before starting such a program, ATSDR will consider recommendations of the Interagency Testing Committee on the type of research that should be done. This committee was established under Section 4(e) of the Toxic Substances Control Act of 1976 [15 U.S.C. 2604(e)](TSCA).

The major goals of the ATSDR SSARP are (1) to address the substance-specific information needs of the public and scientific community, and (2) to supply information necessary to improve the database used to conduct comprehensive public health assessments of populations living near hazardous waste sites. We anticipate that the information will help to establish linkages between levels of contaminants in the environment and levels in human tissue and organs

associated with adverse health effects. Once such links have been established, strategies to mitigate potentially harmful exposures can be developed. This program will also provide data that can be generalized to other substances or areas of science, including risk assessment of chemicals, thus creating a scientific information base for addressing a broader range of data needs.

ATSDR encourages the use of in vitro assessment methods and other innovative tools for filling priority data needs. For example, the agency believes that physiologically based pharmacokinetic (PBPK) modeling could serve as a valuable tool in predicting across route similarities (or differences) in toxicological responses to hazardous substances. Therefore, on a case-by-case basis, a priority data need can be filled using existing data and modeling. In addition, ATSDR is a member of NTP's Interagency Coordinating Committee on the Validation of Alternative Methods (ICCVAM) and supports development, validation, and acceptance of alternative toxicological test methods that reduce, refine, and replace the use of animals, as appropriate.

CERCLA section 104(i)(5)(D) states that it is the sense of Congress that the costs for conducting this research program ''be borne by the manufacturers and processors of the hazardous substance in question,'' as required in TSCA and the Federal Insecticide, Fungicide, and Rodenticide Act of 1972 (7 U.S.C. 136 *et seq.*) (FIFRA), or by cost recovery from responsible parties under CERCLA. To execute this statutory intent, ATSDR developed a plan whereby parts of the SSARP are being conducted via the regulatory mechanisms referenced (TSCA/FIFRA), private-sector voluntarism, and the direct use of CERCLA funds.

The TASARC, composed of scientists from ATSDR, NTP, and EPA, has been set up to:

(1) Advise ATSDR on the assignment of priorities for mechanisms to address data needs,

(2) Coordinate knowledge of research activities to avoid duplication of research in other programs and under other authorities,

(3) Advise ATSDR on issues of science related to substance-specific data needs, and

(4) Maintain a scheduled forum that provides an overall review of the ATSDR SSARP.

TASARC has met 10 times since the initiation of the SSARP. It has guided referral of data needs to EPA and the associated development of test rules through TSCA. In addition, it has endorsed the proposals of several private-sector organizations to conduct voluntary research. Furthermore, TASARC has become a forum for other federal agencies to bring forth their research agendas. For example, it has coordinated research efforts on hazardous pollutants with the Office of Air and Radiation, EPA. TASARC has developed testing guidelines for immunotoxicity; and has endorsed the use of decision-support methodologies such as physiologically based pharmacokinetic (PBPK) modeling and benchmark-dose modeling, where appropriate.

Additional data needs are being addressed through collaborative research efforts with NTP, by ATSDR's Great Lakes Human Health Effects Research Program, and other agency programs. To date, 101 priority data needs associated with the first 50 substances (Table 1) are being addressed via these mechanisms.

Criteria for Evaluating Status of Priority Data Needs

To update the activities covered under the SSARP, criteria for evaluating the status of the priority data needs were developed. Based on these criteria and the review of the current literature, a priority data need can be filled, or unchanged. In the event a priority data need is considered filled, it does not necessarily mean that the study has been completed and that ATSDR has accepted the data. It does, however, indicate that the agency no longer considers it a priority to initiate additional studies at this time.

The criteria for evaluating the status of the priority data needs are described below.

General Criteria

A priority data need is filled:

- If it has been referred to one of the implementation mechanisms and research has been initiated, or
- If an updated ATSDR toxicological profile or other recent review document contains relevant new (peer-reviewed and publicly available) studies since the finalization of the priority data needs document; and it is generally agreed that a priority data need no longer exists.

A priority data need remains unchanged:

- If no mechanism or information has been identified to address the priority data need, or
- If the priority data need is included in the ATSDR/EPA test rule under development, or is associated with a pilot substance in EPA's Voluntary Children's Chemical Evaluation Program.

Specific Criteria

Since the 1999 SSARP update in the **Federal Register**, ATSDR has developed specific criteria for two categories of data needs described below.

- *Epidemiologic studies*—A priority data need is filled if multiple new studies assessing key health end points are available in ATSDR's updated toxicological profile and/or ongoing studies have been identified, e.g., human health studies supported by ATSDR's Great Lakes Human Health Effects Research Program or the Minority Health Professions Foundation Research Program. In some cases, ATSDR indicates that it will continue to evaluate new data as they become available to determine whether additional studies are needed.
- *Exposure levels in humans*—A priority data need is filled if (a) there are current and adequate biomonitoring data for exposed populations associated with health effects (from published or ongoing studies), or (b) there are reference range data (e.g., National Health and Nutrition Examination Survey (NHANES)) or generally agreed upon background population levels. In the latter case, ATSDR acknowledges that reference concentration data can support exposure and health assessments at waste sites, but the agency also continues to recognize the importance of collecting additional data on uniquely exposed populations at waste sites.

It should be noted that the status of the priority data needs may change in future updates of the SSARP as new information becomes available. Further, during the literature review, new studies may be identified suggesting other effects of concern, such as those related to endocrine disruptors and children's health, which have not been included in the original list of priority data needs. In such cases, additional priority data needs may be added to the research agenda. For example, for both tetrachloroethylene and trichloroethylene, the priority data need for developmental neurotoxicity study is now listed separately from the priority data need for one-species developmental toxicity (see Table 1). Therefore, the total number of priority data needs changed accordingly, i.e., from a total of 188 reported in the **Federal Register** notice in 1999 (64 FR 2760) to 190 in the current update notice. Also, research needs previously considered filled might be reassigned as priority data needs, e.g., if a previously derived Minimal Risk Level (MRL), a

health guidance value, was withdrawn from the updated ATSDR toxicological profile. Finally, a priority data need previously associated with an implementation mechanism, may no longer be addressed via that mechanism (or any other mechanism) if the study being conducted to fill the specific priority data need is discontinued.

Based on the above criteria, 62 priority data needs have been filled.

Update of Activities in the SSARP

An update of the activities associated with the mechanisms for implementing the ATSDR Substance-Specific Applied Research Program (SSARP) is discussed below. Publications and reports of research completed under the various implementation mechanisms are available by writing to ATSDR (*see* **ADDRESSES** section of this Notice).

A. TSCA/FIFRA

In developing and implementing the SSARP, ATSDR, NTP, and EPA have identified a subset of priority data needs for substances of mutual interest to the federal programs. These data needs are being addressed through a program of toxicologic testing under TSCA according to established procedures and guidelines. On several occasions when ATSDR identified priority data needs for oral exposure, other agencies needed inhalation data. In response, ATSDR is considering proposals to conduct inhalation studies in conjunction with physiologically based pharmacokinetic (PBPK) studies in lieu of oral studies. ATSDR expects that inhalation data derived from these studies can be used with PBPK modeling to address its oral toxicity data needs. Currently, an EPA/ATSDR test rule, under development, includes eight ATSDR substances, i.e., benzene, chloroethane, cyanide (hydrogen cyanide and sodium cyanide), methylene chloride, tetrachloroethylene, toluene and trichloroethylene, and addresses 18 ATSDR priority data needs (Table 2). The test rule is presently undergoing ATSDR and EPA final review. We anticipate it will be available for public comment in the near future.

TASARC has established an interagency task force on metals and has conducted a survey to assess federal agencies' needs for testing metals. Currently, the task force has agreed to examine at least seven metals included in the ATSDR's SSARP (arsenic, beryllium, chromium, manganese, mercury, nickel, and selenium, associated with 22 priority data needs) (Table 2). The EPA will solicit testing proposals for these metals and pursue test rule development for these metals at a later date.

B. Private-Sector Voluntarism

On February 7, 1992, as part of the Substance-Specific Applied Research Program (SSARP), ATSDR announced a set of proposed procedures for conducting voluntary research (57 FR 4758). Revisions based on public comments were published on November 16, 1992 (57 FR 54160). Private-sector organizations were encouraged to volunteer to conduct research to fill specific priority data needs at no expense to ATSDR.

To date, ATSDR has established agreements with the American Chemistry Council (ACC) [formerly the Chemical Manufacturers Association (CMA)], the General Electric Company (GE), and the Halogenated Solvents Industry Alliance, Inc. (HSIA) to conduct substance-specific research (Table 2). Through the voluntary research efforts of these organizations, at least 16 research needs for polychlorinated biphenyl compounds [PCBs], methylene chloride, tetrachloroethylene, trichloroethylene, and vinyl chloride are being addressed (Table 2).

American Chemistry Council (ACC) Formerly the Chemical Manufacturers Association (CMA)

In 1996, ATSDR entered into a memorandum of understanding (MOU) with ACC covering two studies, ''Vinyl chloride: Combined inhalation two-generation reproduction and developmental toxicity study in CD rats.'' In November 2000, ATSDR accepted the final reports of the studies.

General Electric Company (GE)

In 1995, ATSDR entered into an MOU with SSARP covering two studies on PCBs: (1) ''An assessment of the chronic toxicity and oncogenicity of Aroclors 1016, 1242, 1254, and 1260 administered in diet to rats,'' including ''PCB congener analyses,'' and (2) ''Metabolite detection as a tool for determining naturally occurring aerobic PCB biodegradation.'' While the above studies do not address ATSDR's priority data needs for PCBs, they do address other agency research needs for these substances.

The agency accepted the final report for the chronic toxicity and oncogenicity of the four aroclors in October 1997,and the final report for the aerobic biodegradation study in July 1999.

Halogenated Solvents Industry Alliance (HSIA)

In 1995, ATSDR entered into an MOU with HSIA covering studies to address three priority data needs for methylene chloride. The studies, ''Addressing priority data needs for methylene chloride with physiologically based pharmacokinetic modeling,'' evaluated acute- and subchronic-duration toxicity and developmental toxicity via oral exposure. The data were obtained using physiologically based pharmacokinetic modeling. The final report for these studies was accepted by the agency in February 1997.

In September 1999, HSIA entered into a second MOU with ATSDR to conduct a study, ''Methylene chloride: 28 day inhalation toxicity study in the rat to assess potential immunotoxicity.'' The agency accepted the final report for the study in November 2000. HSIA is in the process of obtaining oral data from the inhalation study using PBPK modeling. This is because ATSDR has determined ingestion of contaminated environmental media to be the primary exposure route at hazardous waste sites. HSIA intends to conduct similar immunotoxicity studies for tetrachloroethylene and trichloroethylene.

In February 2000, ATSDR signed a third MOU with HSIA, which conducted a study, ''Trichloroethylene: Inhalation Developmental Toxicity Study in CD Rats.'' The agency accepted the final report of the study in September 2001. As in the case of the methylene chloride immunotoxicity study described above, HSIA intends to obtain developmental toxicity data for oral exposure using PBPK modeling. Also, HSIA plans to perform similar developmental toxicity studies for tetrachloroethylene. Finally, ATSDR and HSIA are continuing discussion to address additional priority data needs for trichloroethylene and tetrachloroethylene in conjunction with EPA's pilot studies for its Voluntary Children's Chemical Evaluation Program.

In addition to the substance-specific MOUs described above, in March 2001, ATSDR also signed an MOU with the Electric Power Research Institute, Inc. (EPRI) on ''Verification of Techniques for Assessing the Effects of Neurotoxicants on Neurodevelopment in Children.'' The objective of the study is to validate a battery of neurodevelopmental tests for use in assessing the effects of prenatal or postnatal exposure to developmental neurotoxicants. The study includes an evaluation of a broad spectrum of

functions; therefore, the validation of these tests will be useful for further assessing the developmental neurotoxicity of some of the ATSDR priority substances such as the PCBs, methylmercury, and lead. In addition to the private sector support (EPRI), ATSDR is coordinating a federal effort (via interagency agreements with EPA, Food and Drug Administration [FDA] and NIEHS) to support the study.

C. CERCLA-Funded Research (Minority Health Professions Foundation Research Program)

During FY 1992, ATSDR announced a $4 million cooperative agreement program with the Minority Health Professions Foundation (MHPF) to support substance-specific investigations. A not-for-profit Internal Revenue Code 501(c)(3) organization, the MHPF comprises 11 minority health professions schools. Its primary mission is to research health problems that disproportionately affect poor and minority citizens. The purpose of this cooperative agreement is to address substance-specific data needs for priority hazardous substances identified by ATSDR. In addition, this agreement strengthens the environmental health research opportunities for scientists and students at MHPF member institutions and enhances existing disciplinary capacities to conduct research in toxicology and environmental health.

In the first 5-year project period that concluded during FY 1997, nine priority data needs for 21 priority hazardous substances and 22 other research needs for these and other substances were addressed. The MHPF has developed a report, ''Environmental Health and Toxicology Research Program: Meeting Environmental Health Challenges Through Research, Education, and Service,'' that describes the research findings and other successes from the first 5 years of the program. New research initiated in the second 5-year project period includes studies to address 10 additional priority data needs for chlordane, 1,2-dibromo-3-chloropropane, di-n-butyl phthalate, lead, manganese, the polycyclic aromatic hydrocarbons (PAHs), zinc, and eight other research needs.

To date, the MHPF activities have resulted in the publication of 50 manuscripts in peer-reviewed journals. The institutions receiving awards and their current respective research projects that fill identified research needs are listed in Table 2.

D. National Toxicology Program (NTP)

Section 104(i)(5) of CERCLA directs the administrator of ATSDR (in consultation with the administrator of EPA and agencies and programs of the Public Health Service) to assess whether adequate information on the health effects of priority hazardous substances found at NPL sites is available. Where adequate information is not available, ATSDR, in cooperation with the National Toxicology Program (NTP), is required to assure the initiation of a program of research designed to determine these health effects (and techniques for developing methods to determine such health effects).

ATSDR has been collaborating with NTP to address priority data needs of mutual interest, including (1) di-n-butyl phthalate: dose-response data in animals for acute-duration exposure via oral exposure route, (2) carbon tetrachloride: immunotoxicology study via oral exposure, and (3) heptachlor: reproductive toxicity study via oral exposure (Table 2).

E. Great Lakes Human Health Effects Research Program

Some of the priority data needs identified in the SSARP have been independently identified as research needs through the ATSDR Great Lakes Human Health Effects Research Program, a separate research program.

In support of the Great Lakes Critical Programs Act of 1990, ATSDR announced in FY 1992 the availability of $2 million for a grant program to conduct research on the potential for short- and long-term adverse health effects from consumption of contaminated fish from the Great Lakes basin. Research undertaken through this program is intended to build on and amplify the results of past and ongoing fish consumption research in the Great Lakes basin. The ATSDR-supported research projects focus on known high-risk populations to define further the human health consequences of exposure to persistent toxic substances (PTSs) identified in the Great Lakes basin. These at-risk populations include sport anglers; African Americans, Asians and other non-English speaking populations; pregnant women; fetuses, nursing infants, and children of mothers who consume contaminated Great Lakes sport fish; the elderly, and the urban poor. To date, the research activities of the ATSDR Great Lakes research program have resulted in 55 publications in peer-reviewed journals.

Currently, 14 priority data needs for 24 priority hazardous substances (including 15 PAHs) identified in the SSARP are being addressed through this program. The institutions receiving awards and their respective studies are listed in Table 2.

F. Other ATSDR Programs

In its role as a public health agency addressing environmental health, ATSDR may collect human data to validate substance-specific exposure and toxicity findings. The need for additional information on levels of contaminants in humans has been identified, and remains as a priority data need for 49 of the first 50 priority substances (Table 1). ATSDR will obtain this information through exposure and health effects studies, and through establishing and using substance-specific subregistries of people within the agency's National Exposure Registry who have potentially been exposed to these substances.

The list of the 50 priority hazardous substances in the SSARP was forwarded to ATSDR's Exposure and Disease Registry Branch (EDRB), Division of Health Studies, for consideration as potential candidates for subregistries of exposed persons, based on criteria described in its 1994 document, ''National Exposure Registry: Policies and Procedures Manual (Revised),'' Agency for Toxic Substances and Disease Registry, Public Health Service, U.S. Department of Health and Human Services, Atlanta, Georgia, NTIS Publication No. PB95–154571. To date, of the first 50 priority substances in the SSARP, ATSDR has established subregistries for benzene, chromium, and trichloroethylene. Arsenic, cadmium, and lead are not considered to be in the pool of candidate substances for an exposure registry at this time, and, therefore, are not considered priority data needs. This decision will be reevaluated as more information on the chemicals and exposure sites become available. All other substances in the SSARP (Table 1) remain in the candidate pool and therefore continue to be classified as priority data needs. They will be considered for selection as primary contaminants during each selection process.

G. Conclusion

The results of the research conducted via the SSARP are expected to provide information necessary to improve the database used to conduct comprehensive public health assessments of populations living near hazardous waste sites. The information will enable the agency to establish linkages between levels of contaminants in the environment and levels in human tissue and organs associated with adverse health effects, ultimately helping to determine methods for interdicting exposure and mitigating toxicity. This program will also provide

data that can be generalized to other substances or areas of science, including risk assessment of chemicals, thus creating a scientific information base for addressing a broader range of data needs. The agency plans to provide an update on the status of this research program approximately every 3 years.

Dated: January 25, 2002.

Georgi Jones,

Director, Office of Policy and External Affairs, Agency for Toxic Substances and Disease Registry.

TABLE 1.—ATSDR'S SUBSTANCE-SPECIFIC PRIORITY DATA NEEDS FOR 50 PRIORITY HAZARDOUS SUBSTANCES

Substances	PDN ID [1]	PDN description	Program [2]	Status change [3]	Comments [4]
Aldrin/Dieldrin	1A	Dose-response data in animals for intermediate-duration oral exposure.	.....	Filled	An MRL was derived in the 2000 updated toxicological profile.
	1B	Bioavailability from soil.			
	1C	Exposure levels in humans living near hazardous waste sites and other populations, such as exposed workers.	.....	.....	This priority data need, previously addressed in a study in the Great Lakes research program, is no longer investigated in that study.
	1D	Potential candidate for subregistry of exposed persons.	ATSDR.		
Arsenic	2A	Comparative toxicokinetic studies to determine if an appropriate animal species can be identified.	EPA.		
	2B	Half-lives in surface water, groundwater.	EPA.		
	2C	Bioavailability from soil	EPA.		
	2D	Exposure levels in humans living near hazardous waste sites and other populations, such as exposed workers.	G. Lakes	Filled	Background level data are available in ATSDR's 1993 toxicological profile, and at least seven ATSDR studies that evaluated urine arsenic levels and potential adverse health effects are available. Also, additional studies are available in ATSDR's 2000 updated toxicological profile.
Benzene	3A	Dose-response data in animals for acute- and intermediate-duration oral exposure. The subchronic study should include an extended reproductive organ histopathology.	EPA.		
	3B	Two-species developmental toxicity study via oral exposure.	EPA	.....	Previously planned study in the MHPF research program to address this priority data need was canceled.
	3C	Neurotoxicology battery of tests via oral exposure.	EPA.		
	3D	Epidemiologic studies on the health effects of benzene (Special emphasis end points include immunotoxicity).	.....	Filled	Based on an evaluation of the data in ATSDR's 1997 updated toxicological profile. ATSDR will continue to evaluate new data as they become available to determine if additional studies are needed.
	3E	Exposure levels in humans living near hazardous waste sites and other populations, such as exposed workers.	.....	Filled	Reference range concentrations are available (Ashley et al. 1992, 1994; Needham et al. 1995), and at least one ATSDR study that evaluated blood benzene levels and potential adverse health effects is available. ATSDR acknowledges that reference concentration data can support exposure and health assessments at waste sites, but the agency also continues to recognize the importance of collecting additional data on uniquely exposed populations at waste sites.

TABLE 1.—ATSDR'S SUBSTANCE-SPECIFIC PRIORITY DATA NEEDS FOR 50 PRIORITY HAZARDOUS SUBSTANCES—Continued

Substances	PDN ID [1]	PDN description	Program [2]	Status change [3]	Comments [4]
Beryllium	4A	Dose-response data in animals for acute- and intermediate-duration inhalation exposures. The sub-chronic study should include extended reproductive organ histopathology.	EPA.		
	4B	Two-species developmental toxicity study via inhalation exposure.	EPA.		
	4C	Environmental fate in air; factors affecting bioavailability in air.	EPA.		
	4D	Analytical methods to determine environmental speciation.	.....	Filled	Based on an evaluation of the data in ATSDR's 2000 updated toxicological profile.
	4E	Immunotoxicology battery of tests following oral exposure.	EPA.		
	4F	Exposure levels in humans living near hazardous waste sites and other populations, such as exposed workers.	.....	Filled	Reference range concentrations in urine are available (Paschal et al. 1998). ATSDR acknowledges that reference concentration data can support exposure and health assessments at waste sites, but the agency also continues to recognize the importance of collecting additional data on uniquely exposed populations at waste sites.
	4G	Potential candidate for subregistry of exposed persons.	ATSDR.		
Cadmium	5A	Analytical methods for biological tissues and fluids and environmental media.	.....	Filled	Based on an evaluation of the data in ATSDR's 1999 updated toxicological profile.
	5B	Exposure levels in humans living near hazardous waste sites and other populations, such as exposed workers.	G. Lakes	Filled	Referent population urine cadmium levels are available (NHANES III), and at least nine ATSDR studies that evaluated blood and urine cadmium levels and potential adverse health effects are available.
Carbon tetrachloride	6A	Dose-response data in animals for chronic oral exposure. The study should include extended reproductive organ and nervous tissue histopathology.			
	6B	Immunotoxicology battery of tests via oral exposure.	NTP	Filled	NTP dose-finding study and one new study in ATSDR's 1994 updated toxicological profile addressed the priority data need.
	6C	Half-life in soil	.....	Filled	One new study in ATSDR's 1994 updated toxicological profile provided information on half-life in soil.
	6D	Exposure levels in humans living near hazardous waste sites and other populations, such as exposed workers.	.....	Filled	Reference range concentrations in blood are available (Ashley et al. 1992, 1994; Needham et al. 1995). ATSDR acknowledges that reference concentration data can support exposure and health assessments at waste sites, but the agency also continues to recognize the importance of collecting additional data on uniquely exposed populations at waste sites.

TABLE 1.—ATSDR'S SUBSTANCE-SPECIFIC PRIORITY DATA NEEDS FOR 50 PRIORITY HAZARDOUS SUBSTANCES—Continued

Substances	PDN ID [1]	PDN description	Program [2]	Status change [3]	Comments [4]
	6E	Potential candidate for subregistry of exposed persons.	ATSDR.		
Chlordane	7A	Oral multigenerational studies to evaluate reproductive toxicity.	MHPF ..... NTP.	Filled	Availability of ongoing study in the MHPF research program and anticipated initiation of an NTP study in 2002.
	7B	Bioavailability studies following ingestion of contaminated media.			
	7C	Exposure levels in humans living near hazardous waste sites and other populations potentially exposed to chlordane.			
	7D	Potential candidate for subregistry of exposed persons.	ATSDR.		
Chloroethane	8A	Dose-response data in animals for acute- and intermediate-duration oral exposures. The subchronic study should include an evaluation of immune and nervous system tissues, and extended reproductive organ histopathology.	EPA.		
	8B	Dose-response data in animals for chronic inhalation exposures. The study should include an evaluation of nervous system tissues.	EPA.		
	8C	Potential candidate for subregistry of exposed persons.	ATSDR.		
Chloroform	9A	Dose-response data in animals for intermediate-duration oral exposure.	.....	Filled	An MRL was derived in ATSDR's 1997 updated toxicological profile.
	9B	Epidemiologic studies on the health effects of chloroform (Special emphasis end points include cancer, neurotoxicity, reproductive and developmental toxicity, hepatotoxicity, and renal toxicity).	.....	Filled	Based on an evaluation of the data in ATSDR's 1997 updated toxicological profile. ATSDR will continue to evaluate new data as they become available to determine if additional studies are needed.
	9C	Exposure levels in humans living near hazardous waste sites and other populations, such as exposed workers.	.....	Filled	Reference range concentrations in blood are available (Ashley et al. 1992, 1994; and Needham et al. 1995). ATSDR acknowledges that reference concentration data can support exposure and health assessments at waste sites, but the agency also continues to recognize the importance of collecting additional data on uniquely exposed populations at waste sites.

TABLE 1.—ATSDR'S SUBSTANCE-SPECIFIC PRIORITY DATA NEEDS FOR 50 PRIORITY HAZARDOUS SUBSTANCES—Continued

Substances	PDN ID [1]	PDN description	Program [2]	Status change [3]	Comments [4]
	9D	Potential candidate for subregistry of exposed persons.	ATSDR.		
Chromium	10A	Dose-response data in animals for acute-duration exposure to chromium (VI) and (III) via oral exposure and for intermediate-duration exposure to chromium (VI) via oral exposure.	EPA.		
	10B	Multigeneration reproductive toxicity study via oral exposure to chromium (III) and (VI).	EPA.		
	10C	Immunotoxicology battery of tests following oral exposure to chromium (III) and (VI).	EPA.		
	10D	Two-species developmental toxicity study via oral exposure to chromium (III) and (VI).	EPA.		
	10E	Exposure levels in humans living near hazardous waste sites and other populations, such as exposed workers.	G. Lakes	Filled	Reference range concentrations in urine are available (Paschal et al. 1998). Also, at least two ATSDR studies that evaluated urine chromium levels and potential adverse health effects are available. In addition, this PDN is being addressed in a study in the Great Lakes research program.
Cyanide	11A	Dose-response data in animals for acute- and intermediate-duration exposures via inhalation. The subchronic study should include extended reproductive organ histopathology and evaluation of neurobehavioral and neuropathological end points.	EPA.		
	11B	Two-species developmental toxicity study via oral exposure.	EPA.		
	11C	Evaluation of the environmental fate of cyanide in soil.	.....	Filled	A study addressing the priority data need was submitted by industry to EPA in response to EPA's solicitation for proposals for test rule making. Scientists from EPA and ATSDR reviewed the study and considered that this research need is no longer a priority.
	11D	Exposure levels in humans living near hazardous waste sites and other populations, such as exposed workers.			
	11E	Potential candidate for subregistry of exposed persons.	ATSDR.		
1,2-dibromo-3-chloropro pane	12A	Dose-response data in animals for acute- duration exposure via the oral route (including reproductive organ histopathology).			
	12B	Dose-response data in animals for chronic-duration exposure via the oral route (including reproductive organ histopathology).			
	12C	Two-species developmental toxicity study via oral exposure.			

TABLE 1.—ATSDR'S SUBSTANCE-SPECIFIC PRIORITY DATA NEEDS FOR 50 PRIORITY HAZARDOUS SUBSTANCES—Continued

Substances	PDN ID [1]	PDN description	Program [2]	Status change [3]	Comments [4]
	12D	Immunotoxicology testing battery via oral exposure.	.....	.....	Previously planned study in the MHPF research program to address this priority data need was canceled.
	12E	Neurotoxicology testing battery via oral exposure.	.....	.....	Previously planned study in the MHPF research program to address this priority data need was canceled.
	12F	Exposure levels in humans living near hazardous waste sites and other exposed populations, such as exposed workers.			
	12G	Potential candidate for subregistry of exposed persons.	ATSDR.		
DDT	13A	Dose-response data in animals for chronic-duration oral exposure.			
	13B	Comparative toxicokinetic study (across routes/species).			
	13C	Bioavailability and bioaccumulation from soil.			
	13D	Epidemiologic studies on the health of DDT, DDD, and DDE (Special emphasis end points include immunotoxicity, and reproductive and developmental toxicity.	G. Lakes	Filled	Multiple new studies in ATSDR's 2000 updated toxicological profile and five ongoing studies in the Great Lakes research program are available.
	13E	Exposure levels in humans living near hazardous waste sites and other populations, such as exposed workers.	G. Lakes.		
	13F	Potential candidate for subregistry of exposed persons.	ATSDR.		
Di(2-ethyl-hexyl)phthalate	14A	Epidemiologic studies on the health effects of DEHP (Special emphasis end points include cancer).			
	14B	Dose-response data in animals for acute- and intermediate-duration oral exposures. The subchronic study should include an extended histopathologic evaluation of the immunologic and neurologic systems.	.....	.....	This research need is reassigned as a priority data need because of the data in ATSDR's 2000 updated toxicological profile. Specifically, the previously developed MRL for acute-duration (1993 toxicological profile) was withdrawn, and a provisional MRL for intermediate-duration was derived replacing the previously established one.
	14C	Multigeneration reproductive toxicity study via oral exposure.	.....	.....	This research need is reassigned as a priority data need based on an evaluation of the data in ATSDR's 2000 updated toxicological profile. Also, the NTP Center for the Evaluation of Risks to Human Reproduction Expert Panel Report (October 2000) has identified critical data needs for reproductive toxicity
	14D	Comparative toxicokinetic studies (Studies designed to examine how primates metabolize and distribute DEHP as compared with rodents via oral exposure).	.....	.....	The NTP Center for the Evaluation of Risks to Human Reproduction Expert Panel Report (October 2000) has also identified critical data needs for toxicokinetic information.
	14E	Exposure levels in humans living near hazardous waste sites and other populations, such as exposed workers.			
	14F	Potential candidate for subregistry of exposed persons.	ATSDR.		

TABLE 1.—ATSDR'S SUBSTANCE-SPECIFIC PRIORITY DATA NEEDS FOR 50 PRIORITY HAZARDOUS SUBSTANCES—Continued

Substances	PDN ID [1]	PDN description	Program [2]	Status change [3]	Comments [4]
Di-n-butyl phthalate	15A	Dose-response data in animals for acute-duration exposure via the oral route.	NTP	Filled	NTP completed a 14-day study.
	15B	Dose-response data in animals for chronic-duration exposure via the oral route.			
	15C	Carcinogenicity studies via oral exposure.			
	15D	*In vivo* genotoxicity studies	MHPF	Filled	Availability of ongoing studies in the MHPF research program.
	15E	Immunotoxicology studies via oral exposure.			Previously planned study in the MHPF research program to address this priority data need was canceled.
	15F	Neurotoxicity studies via oral exposure.			Previously planned study in the MHPF research program to address this priority data need was canceled.
	15G	Exposure levels in humans living near hazardous waste sites and other populations, such as exposed workers.			
	15H	Environmental fate of di-n-butyl phthalate in environmental media.			
	15I	Bioavailability in contaminated environmental media near hazardous waste sites.			
	15J	Potential candidate for subregistry of exposed persons.	ATSDR.		
Disulfoton	16A	Immunotoxicology testing battery following oral exposure.			
	16B	Exposure levels of disulfoton in tissues/fluids for populations living near hazardous waste sites and other populations, such as exposed workers.			
	16C	Disulfoton should be considered as a potential candidate for a subregistry of exposed persons.	ATSDR.		
Endosulfan (α,β, and sulfate)	17A	Acute-duration oral exposure.			
	17B	Data on sensitive neurologic end point following oral exposure.			
	17C	Exposure levels in humans living near hazardous waste sites and other populations, such as exposed workers.			
	17D	Data on the bioavailability of endosulfan from soil.			
	17E	Potential candidate for subregistry of exposed persons.	ATSDR.		
Endrin/endrin aldehyde	18A	Dose-response animal data for acute oral exposure to endrin.			
	18B	Multigeneration reproductive toxicity studies via oral exposure to endrin.	NTP.		
	18C	Accurately describe the toxicokinetics of endrin and its degradation products and identify the animal species to be used as the most appropriate model for human exposure.			
	18D	Exposure levels for endrin and its degradation products in humans living near hazardous waste sites.			

TABLE 1.—ATSDR'S SUBSTANCE-SPECIFIC PRIORITY DATA NEEDS FOR 50 PRIORITY HAZARDOUS SUBSTANCES—Continued

Substances	PDN ID [1]	PDN description	Program [2]	Status change [3]	Comments [4]
	18E	Accurately describe the environmental fate of endrin, including environmental breakdown products and rates, media half-lives, and chemical and physical properties of the breakdown products that help predict mobility and volatility.			
	18F	Potential candidate for subregistry of exposed persons.	ATSDR.		
Heptachlor/heptachlor epoxide	19A	Dose-response animal data for acute- and intermediate-duration oral exposures, including immunopathology.			
	19B	Multigeneration reproductive toxicity studies via the oral route of exposure.	NTP	Filled	Availability of publication ''The effects of perinatal/juvenile heptachlor exposure on adult immune and reproductive system function in rats'' by Smialowicz et al. (2001), Toxicological Sciences 61:164–75.
	19C	Two-species developmental toxicity studies via the oral route of exposure.			
	19D	Exposure levels in humans living near hazardous waste sites and other populations, such as exposed workers.			
	19E	Bioavailability from contaminated air, water, and soil and bioaccumulation potential.			
	19F	Potential candidate for subregistry of exposed persons.	ATSDR.		
Hexachloro-butadiene	20A	Dose-response data in animals for acute-duration exposure via the oral route.			
	20B	Exposure levels in humans living near hazardous waste sites and other populations, such as exposed workers.			
	20C	Environmental fate studies that determine the extent to which hexachlorobutadiene volatilizes from soil, and studies that determine the reactions and rates which drive degradation in soil.			
	20D	Bioavailability studies in soil and plants.			
	20E	Potential candidate for subregistry of exposed person.	ATSDR.		
Hexachloro-cyclohexane (α, β, δ, and γ).	21A	Dose-response data for chronic-duration oral exposure.	.....	Filled	An MRL was derived in ATSDR's 1999 updated toxicological profile.
	21B	Mechanistic studies on the neurotoxicity, hepatotoxicity, reproductive toxicity, and immunotoxicity of hexachlorocyclohexane.			
	21C	Exposure levels in humans living near hazardous waste sites and other populations, such as exposed workers.	.....	Filled	Reference range concentrations in blood are available. ATSDR acknowledges that reference concentration data can support exposure and health assessments at waste sites, but the agency also continues to recognize the importance of collecting additional data on uniquely exposed populations at waste sites.

TABLE 1.—ATSDR'S SUBSTANCE-SPECIFIC PRIORITY DATA NEEDS FOR 50 PRIORITY HAZARDOUS SUBSTANCES—Continued

Substances	PDN ID [1]	PDN description	Program [2]	Status change [3]	Comments [4]
	21D	Potential candidate for subregistry of exposed persons.	ATSDR.		
Lead	22A	Mechanistic studies on the neurotoxic effects of lead.	MHPF	Filled	Multiple new studies (13 publications from the MHPF research program + numerous new published studies in ATSDR's 1999 updated toxicological profile) are available.
	22B	Analytical methods for tissue levels.	MHPF	Filled	A publication from the MHPF research program and numerous studies in ATSDR's 1999 toxicological profile are available.
	22C	Exposure levels in humans living near hazardous waste sites and other populations, such as exposed workers.	MHPF G. Lakes	Filled	Referent population blood and urine lead levels are available (NHANES III; Paschal et al. 1998), and at least 19 ATSDR studies that evaluated blood lead levels and potential adverse health effects are available.
Manganese	23A	Dose-response data for acute- and intermediate-duration oral exposures (the subchronic study should include reproductive histopathology and an evaluation of immunologic parameters including manganese effects on plaque-forming cells (SRBC), surface markers (D4:D8 ratio), and delayed hypersensitivity reactions).	MHPF EPA	Filled	Availability of ongoing studies in the MHPF research program.
	23B	Toxicokinetic studies on animals to investigate uptake and absorption, relative uptake of differing manganese compounds, metabolism of manganese, and interaction of manganese with other substances following oral exposure.	MHPF EPA	Filled	Avaialbiltiy of ongoing studies in the MHPF research program.
	23C	Epidemiological studies on the health effects of manganese (Special emphasis end points include neurologic, reproductive, developmental, immunologic, and cancer).		Filled	Based on evaluation of the data in ATSDR's 2000 updated toxicological profile. ATSDR will continue to evaluate new data as they become available to determine if additional studies are needed.
	23D	Exposure levels in humans living near hazardous waste sites and other populations, such as exposed workers.			
	23E	Relative bioavailability of different manganese compounds and bioavialability of manganese from soil.	EPA.		
Mercury	24A	Multigeneration reproductive toxicity study via oral exposure.	MHPF	Filled	Three publications from the MHPF research program are available.
	24B	Dose-response data in animals for chronic-duration oral exposure.	EPA	Filled	An MRL was derived in ATSDR's 1999 updated toxicological profile.
	24C	Immunotoxicology battery of tests via oral exposure.	EPA.		

TABLE 1.—ATSDR'S SUBSTANCE-SPECIFIC PRIORITY DATA NEEDS FOR 50 PRIORITY HAZARDOUS SUBSTANCES—Continued

Substances	PDN ID [1]	PDN description	Program [2]	Status change [3]	Comments [4]
	24D	Exposure levels in humans living near hazardous waste sites and other populations, such as exposed workers.	G. Lakes	Filled	Background levels data are available in ATSDR's 1997 updated toxicological profile, and multiple studies that evaluated blood, urine, and hair mercury levels and potential adverse health effects are available (Five ATSDR studies + at least eight ongoing studies of the Great Lakes research program).
	24E	Potential candidate for subregistry of exposed persons.	ATSDR.		
Methoxychlor	25A	Evaluate neurologic effects after long-term, low-level oral exposure.	.....	Filled	Based on an evaluation of the data in ATSDR's 2000 updated toxicological profile.
	25B	Exposure levels of methoxychlor and primary metabolities in humans living near hazardous waste sites and in those individuals with the potential to ingest it.			
	25C	Evaluate the fate, transport, and levels of the degradation products of methoxychlor in soil.			
	25D	Potential candidate for subregistry of exposed persons.	ATSDR.		
Methylene chloride	26A	Dose-response data in animals for acute- and intermediate-duration oral exposure. The subchronic study should include extended reproductive organ histopathology, neuropathology, and immunopathology.	EPA ..... Vol Res.	Filled	ATSDR accepted HSIA's toxicity study for acute- and intermediate-exposure duration in February 1997. ATSDR accepted HSIAs immunotoxicity study via inhalation in November 2000. Currently, HSIA is conducting PBPK modeling to obtain data for oral exposure using the data from its inhalation study. Neurotoxicity screening battery testing remains in the ATSDR/EPA test rule under development.
	26B	Two-species developmental toxicity study via the oral route.	EPA ..... Vol Res.	Filled	ATSDR accepted HSIA's study in February 1997.
	26C	Exposure levels in humans living near hazardous waste sites and other populations, such as exposed workers.	.....	Filled	Reference range concentrations in blood are available (Ashley et al. 1992, 1994; Needham et al. 1995). ATSDR acknowledges that reference concentration data can support exposure and health assessments at waste sites, but the agency also continues to recognize the importance of collecting additional data on uniquely exposed populations at waste sites.
	26D	Potential candidate for subregistry of exposed persons.	ATSDR.		
Nickel	27A	Epidemiologic studies on the health effects of nickel (Special emphasis end points include reproductive toxicity.	.....	Filled	At least two new relevant studies in ATSDR's 1997 updated toxicological profile are available. ATSDR will continue to evaluate new data as they become available to determine if additional studies are needed.
	27B	Two-species developmental toxicity study via the oral route.	EPA	Filed	In ATSDR's 1997 updated toxicological profile, a new study confirming the results of two previous studies is available

TABLE 1.—ATSDR'S SUBSTANCE-SPECIFIC PRIORITY DATA NEEDS FOR 50 PRIORITY HAZARDOUS SUBSTANCES—Continued

Substances	PDN ID [1]	PDN description	Program [2]	Status change [3]	Comments [4]
	27C	Dose-response data in animals for acute- and intermediate-duration oral exposures.	EPA.		
	27D	Neurotoxicology battery of tests via oral exposure.	EPA.		
	27E	Bioavailability of nickel from soil ...	EPA.		
	27F	Exposure levels in humans living near hazardous waste sites and other populations, such as exposed workers.	G. Lakes	Filled	Based on availability of the study in the Great Lakes research program and an evaluation of ATSDR's 1997 updated toxicological profile.
	27G	Potential candidate for subregistry of exposed persons.	ATSDR.		
PAHs (Includes 15 substances)	28A	Dose-response data in animals for intermediate-duration oral exposures. The subchronic study should include extended reproductive organ histopathology and immunopathology.	MHPF	Filled	MRLs for four PAHs were derived in ATSDR's 1995 updated toxological profile. A publication from the MHPF research program addressing this priority data need is available.
	28B	Two-species developmental toxicity study via inhalation or oral exposure.	MHPF	Filled	Ongoing studies in the MHPF research program and one publication from the program are available.
	28C	Mechanistic studies on PAHs, on how mixtures of PAHs can influence the ultimate activation of PAHs, and on how PAHs affect rapidly proliferating tissues.	MHPF	Filled	At least 12 new studies in ATSDR's 1995 updated toxicological profile and two publications from the MHPF research program are available.
	28D	Dose-response data in animals for acute- and intermediate-duration inhalation exposures. the subchronic study should include extended reproductive organ histopathology and immunopathology.	MHPF	Filled	Ongoing studies in the MHPF research program and one publication from the program are available.
	28E	Epidemiologic studies on the health effects of PAHs (Special emphasis end points include cancer, dermal, hemolymphatic, and hepatic toxicity.	.....	Filled	At least three new studies in ATSDR's 1995 updated toxicological profile are available. ATSDR will continue to evaluate new data as they become available to determine if additional studies are needed.
	28F	Exposure levels in humans living near hazardous waste sites and other populations, such as exposed workers.	G. Lakes	Filled	Based on ongoing study in the Great Lakes research program and an evaluation of the ATSDR 1995 updated toxicological profile. Also, the agency continues to recognize the importance of collecting additional data on uniquely exposed populations at waste sites.
	28G	Potential candidate for subregistry of exposed persons.	ATSDR.		
PCBs	29A	Dose-response data in animals for acute- and intermediate-duration oral exposures.	G. Lakes	.....	Although an MRL for intermediate-exposure duration was derived in ATSDR's 2000 updated toxicological profile, an MRL for acute-exposure duration is still lacking.
	29B	Biodegradation of PCBs in water; bioavailability of PCBs in air, water, and soil.			
	29C	Dose-response data in animals for acute- and intermediate-duration inhalation exposures. The subchronic study should include extended reproductive organ histopathology.			

TABLE 1.—ATSDR'S SUBSTANCE-SPECIFIC PRIORITY DATA NEEDS FOR 50 PRIORITY HAZARDOUS SUBSTANCES—Continued

Substances	PDN ID [1]	PDN description	Program [2]	Status change [3]	Comments [4]
	29D	Epidemiologic studies on the health effects of PCBs (Special emphasis end points include immunotoxicity, gastrointestinal toxicity, liver toxicity, kidney toxicity, thyroid toxicity, and reproductive/developmental toxicity).	G. Lakes	Filled	Multiple new published studies in ATSDR's 2000 updated toxicological profile and at least nine ongoing studies in the Great Lakes research program are available.
	29E	Exposure levels in humans living near hazardous waste sites and other populations, such as exposed workers.	G. Lakes	Filled	Background levels data are available (ATSDR's 1997 updated toxicological profile, and Needham et al. 1996). Also, multiple studies that evaluated blood and breast milk PCB levels and potential adverse health effects are available (at least six ATSDR studies + at least eight ongoing studies in the Great Lakes research program).
	29F	Potential candidate for subregistry of exposed persons.	ATSDR.		
	29G [(5)]	Chronic toxicity and oncogenicity via oral exposure.	Vol Res ..	Filled	ATSDR accepted the final report of the GE in October 1997.
	29H [(5)]	Aerobic PCB biodegradation in sediment.	Vol Res ..	Filled	ATSDR accepted the final report of the GE study in July 1999.
	29I [(5)]	PCB congener analysis	Vol Res .. G. Lakes	Filled	ATSDR accepted the final report of the GE study in October 1997. Also, ongoing studies in the Great Lakes research program are available.
Selenium	30A	Dose-response data in animals for acute-duration oral exposure.	EPA.		
	30B	Immunotoxicology battery of tests via oral exposure.	EPA.		
	30C	Epidemiologic studies on the health effects of selenium (Special emphasis end points include cancer, reproductive and developmental toxicity, hepatotoxicity, and adverse skin effects).	.....	Filled	Based on an evaluation of ATSDR's 2001 updated toxicological profile. ATSDR will continue to evaluate new data as they become available to determine if additional studies are needed.
	30D	Exposure levels in humans living near hazardous waste sites and other populations, such as exposed workers.	G. Lakes	Filled	Referent population serum selenium levels are known (NHANES III). Two ongoing studies in the Great Lakes research program are available. ATSDR acknowledges that reference concentration data can support exposure and health assessments at waste sites, but the agency also continues to recognize the importance of collecting additional data on uniquely exposed populations at waste sites.
	30E	Potential candidate for subregistry of exposed persons.	ATSDR.		
Tetrach loroethy lene	31A	Dose-response data in animals for acute-duration oral exposure, including neuropathology and demeanor, and immunopathology.	.....	Filled	An MRL was derived in the 1997 updated toxicological profile.

TABLE 1.—ATSDR'S SUBSTANCE-SPECIFIC PRIORITY DATA NEEDS FOR 50 PRIORITY HAZARDOUS SUBSTANCES—Continued

Substances	PDN ID [1]	PDN description	Program [2]	Status change [3]	Comments [4]
	31B	Multigeneration reproductive toxicity study via oral exposure.	Vol Res ..	.....	HSIA's inhalation study was accepted by ATSDR and included in ATSDR's 1997 updated toxicological profile. However, ATSDR has identified ingestion of contaminated environmental media to be the primary exposure route for this chemical at waste sites. HSIA plans to obtain the oral data from the inhalation study by conducting PBPK modeling.
	31C	Dose-response data in animals for intermediate-duration oral exposure, including neuropathology, and immunopathology.	EPA ..... Vol Res.	.....	HSIA intends to obtain oral data for neurotoxicity by PBPK modeling, and to conduct an immunotoxicity study.
	31D	One-species developmental toxicity study via oral exposure.	EPA ..... Vol Res.		
	31E	Developmental neurotoxicity study via oral exposure.	EPA ..... Vol Res.		
	31F	Exposure levels in humans living near hazardous waste sites and other populations, such as exposed workers.	.....	Filled	Reference range concentrations in blood are available (Ashley et al. 1992, 1994; Needham et al. 1995). ATSDR acknowledges that reference concentration data can support exposure and health assessments at waste sites, but the agency also continues to recognize the importance of collecting additional data on uniquely exposed populations at waste sites.
	31G	Potential candidate for subregistry of exposed persons.	ATSDR.		
Toluene	32A	Dose-response data in animals for acute- and intermediate-duration oral exposures. The subchronic study should include an extended histopathologic evaluation of the immune system.	EPA	Filled	Availability of MRLs for acute- and intermediate-exposure durations in ATSDR's 2000 updated toxicological profile. Immunotoxicity study remains in the ATSDR/EPA test rule under development.
	32B	Comparative toxicokinetic studies (Characterization of absorption, distribution, and excretion via oral exposure).	.....	Filled	Based on evaluation of the data in ATSDR's 2000 updated toxicological profile.
	32C	Neurotoxicology battery of tests via oral exposure.	EPA ..... MHPF.		
	32D	Mechanism of toluene-induced neurotoxicity.	.....	Filled	At least 15 studies in ATSDR's 1994 updated toxicological profile and additional new data in ATSDR's 2000 updated toxicological profile are available.
	32E	Exposure levels in humans living near hazardous waste sites and other populations, such as exposed worker.	.....	Filled	Reference range concentrations in blood are available (Ashley et al. 1992, 1994; Needham et al. 1995), and additional data in ATSDR's 2000 updated toxicological profile are available. ATSDR acknowledges that reference concentration data can support exposure and health assessments at waste sites, but the agency also continues to recognize the importance of collecting additional data on uniquely exposed populations at waste sites.
	32F	Potential candidate for subregistry of exposed persons.	ATSDR.		

TABLE 1.—ATSDR'S SUBSTANCE-SPECIFIC PRIORITY DATA NEEDS FOR 50 PRIORITY HAZARDOUS SUBSTANCES—Continued

Substances	PDN ID [1]	PDN description	Program [2]	Status change [3]	Comments [4]
Toxaphene	33A	Identify the long-term health consequences of exposure to environmental toxaphene via oral exposure..			
	33B	Conduct additional immunotoxicity studies for chronic-duration via oral route of exposure.			
	33C	Conduct additional neurotoxicity studies for chronic-duration via oral route of exposure.			
	33D	Exposure levels in humans living in areas near hazardous waste sites with toxaphene and in those individuals with the potential to ingest it.			
	33E	Potential candidate for subregistry of exposed persons..	ATSDR.		
Trichloroethylene	34A	Dose-response data in animals for acute-duration oral exposure.	.....	Filled	An MRL was derived in ATSDR's 1997 updated toxicological profile.
	34B	Dose-response data in animals for intermediate-duration oral exposure.	EPA ..... Vol Res.		
	34C	Neurotoxicology battery of tests via the oral route.	EPA ..... MHPF ..... Vol Res.		
	34D	Immunotoxicology battery of tests via the oral route.	EPA ..... Vol Res.		
	34E	One-species developmental toxicity study via oral exposure.	Vol Res ..	.....	ATSDR accepted HSIA's final report for an inhalation developmental toxicity study in September 2001. HSIA is currently using PBPK modeling to obtain data for oral exposure using the data from its inhalation study.
	34F	Developmental neurotoxicity study via oral exposure.	EPA ..... Vol Res.		
	34G	Epidemiologic studies on the health effects of trichloroethylene (Special emphasis end points include cancer, hepatotoxicity, renal toxicity, developmental toxicity, and neurotoxicity).	.....	Filled	Based on evaluation of the data in ATSDR's 1997 updated toxicological profile. ATSDR will continue to evaluate new data as they become available to determine if additional studies are needed.
	34H	Exposure levels in humans living near hazardous waste sites and other populations, such as exposed workers.	.....	Filled	Reference range concentrations in blood are available (Ashley et al. 1992, 1994; Needham et al. 1995). ATSDR acknowledges that reference concentration data can support exposure and health assessments at waste sites, but the agency also continues to recognize the importance of collecting additional data on uniquely exposed populations at waste sites.
Vinyl chloride	35A	Dose-response data in animals for acute-duration inhalation exposure.	.....	Filled	An MRL was derived in ATSDR's 1997 updated toxicological profile.
	35B	Multigeneration reproductive toxicity study via inhalation.	Vol Res ..	Filled	ATSDR accepted the final report of ACC's study in November 2000.
	35C	Dose-response data in animals for chronic-duration inhalation exposure.			
	35D	Mitigation of vinyl chloride-induced toxicity.			

TABLE 1.—ATSDR'S SUBSTANCE-SPECIFIC PRIORITY DATA NEEDS FOR 50 PRIORITY HAZARDOUS SUBSTANCES—Continued

Substances	PDN ID [1]	PDN description	Program [2]	Status change [3]	Comments [4]
	35E	Two-species developmental toxicity study via inhalation..	Vol Res ..	Filled	ATSDR accepted the final report of ACC's study in November 2000.
	35F	Exposure levels in humans living near hazardous waste sites and other populations, such as exposed workers.			
	35G	Potential candidate for subregistry of exposed persons.	ATSDR.		
Zinc	36A	Dose-response data in animals for acute- and intermediate-duration oral exposures. The subchronic study should include an extended histopathologic evaluation of the immunologic and neurologic systems.	MHPF	Filled	Ongoing studies in the MHPF research program are available.
	36B	Multigeneration reproductive toxicity study via oral exposure.	MHPF.		
	36C	Carcinogenicity testing (2-year bioassay) via oral exposure.			
	36D	Exposure levels in humans living near hazardous waste sites and other populations, such as exposed workers.	.....	.....	This priority data need, previously anticipated to be addressed under the voluntary research program, is not being investigated under any of the ATSDR research programs.
	36E	Potential candidate for subregistry of exposed persons.	ATSDR.		

[1] Priority data need identification number.

[2] Programs addressing data needs. ATSDR=ATSDR's Division of Health Studies; EPA=Environmental Protection Agency; G. Lakes=Great Lakes Human Health Effects Research Program; MHPF=Minority Health Professions Foundation schools; NTP=National Toxicology Program; Vol Res=Voluntary research.

[3] PDN can be filled or remain unchanged based on reevaluation of the database using criteria developed by ATSDR.

[4] ACC=American Chemistry Council; Ashley et al. 1992=Ashley DL, Bonin MA, Cardinali FL, et al. Anal Chem (1992) 64:1021–29; Ashley et al. 1994=Ashley DL, Bonin MA, Cardinali FL et al., Clin Chem (1994) 40/7:1401–4; ATSDR studies=Studies conducted by ATSDR's Division of Health Studies; GE=General Electric Company ; HSIA=Halogenated Solvents Industry Alliance, Inc.; MHPF=Minority Health Professions Foundation schools; MRL=Minimal Risk Level; Needham et al. 1995=Needham LL, Hill RH Jr, Ashley DL, Pirkle JL, and Sampson EJ. Environ Health Perspect 103 (Suppl 3):89–94; Needham et al. 1996=Needham LL, Patterson DG Jr, Burse VW, Paschal DC, Turner WE, and Hill VW Jr. Toxicol Ind Health 12:507–513; NHANES III=The Third National Health and Nutrition Examination Survey, conducted by the National Center for Health Statistics, Centers for Disease Control and Prevention, Atlanta, GA; NTP=National Toxicology Program; Paschal et al. 1998=Paschal DC, Ting BC, Morrow JC, et al. Environ Res, Section A 76: 53–59; PBPK modeling=physiologically based pharmacokinetic modeling; Toxicological profile=ATSDR's toxicological profiles for the agency's priority hazardous substances.

[5] Not a priority data need.

TABLE 2.—GROUPS ADDRESSING ATSDR'S SUBSTANCE-SPECIFIC PRIORITY DATA NEEDS (PDNS)

ATSDR program	Firm, institution, agency, or consortium	Substance	PDN ID
Voluntarism	American Chemistry Council	Vinyl Chloride	35B, 35E
	General Electric Company	PCBs	29G,* 29H,* 29I*
	Halogenated Solvents Industry Alliance, Inc.	Methylene chloride	26A, 26B
		Tetrachloroethylene	31B, 31C, 31D, 31E
		Trichloroethylene	34B, 34C, 34D, 34E, 34F
Minority Health Professions Foundation Schools.	Florida A & M University	Lead	22A
	The King/Drew Medical Center of the Charles R. Drew University of Medicine and Science.	Lead	22B, 22C
	Meharry Medical College	PAHS	28A, 28B, 28C, 28D
	Morehouse School of Medicine	Lead	22C
	Texas Southern University	Di-n-butyl phthalate	15D
		Lead	22A
		Toluene	32C
		Trichloroethylene	34C

TABLE 2.—GROUPS ADDRESSING ATSDR'S SUBSTANCE-SPECIFIC PRIORITY DATA NEEDS (PDNS)—Continued

ATSDR program	Firm, institution, agency, or consortium	Substance	PDN ID
	Tuskegee University	Chlordane	7A
		Mercury	24A
		Zinc	36A, 36B
	Xavier University	Manganese	23A, 23B
		Zinc	36A
Great Lakes Human Health Effects Research Program.	Michigan State University	DDT/DDE	13D, 13E
		Lead	22C
		Mercury	24D
		PCBs	29D, 29E, 29I
		Selenium	30D
	New York State Health Department.	DDT/DDE	13E
		Lead	22C
		Mercury	24D
		PCBs	29D, 29E, 29I
	State University of New York at Buffalo.	DDT/DDE	13D, 13E
		Lead	22C
		Mercury	24D
		PCBs	29D, 29E, 291
	State University of New York at Oswego.	DDT/DDE	13D, 13E
		Lead	22C
		Mercury	24D
		PCBs	29D, 29E, 29I
	University of Illinois at Chicago	DDT/DDE	13D, 13E
		Lead	22C
		Mercury	24D
		PCBs	29D, 29E, 291
	University of Illinois at Urbana-Champaign.	DDT/DDE	13D, 13E
		Lead	22C
		Mercury	24D
		PCBs	29D, 29E, 29I
	University of Wisconsin—Milwaukee.	DDT/DDE	13D, 13E
		Lead	22C
		Mercury	24D
		PCBs	29A, 29D, 29E, 29I
		Selenium	30D
	Wisconsin Department of Health and Social Services—5 State Consortium.	Arsenic	2D
		Cadmium	5B
		Chromium	10E
		DDT/DDE	13D, 13E
		Lead	22C
		Mercury	24D
		Nickel	27F
		PAHs	28F
		PCBs	29D, 29E, 29I
Environmental Protection Agency TSCA/FIFRA.	ATSDR Test Rule	Benzene	3A, 3B, 3C
		Chloroethane	8A, 8B
		Cyanide (hydrogen cyanide and sodium cyanide).	11A, 11B
		Methylene chloride	26A, 26B
		Tetrachloroethylene	31C, 31D, 31E
		Toluene	32A, 32C
		Trichloroethylene	34B, 34C, 34D, 34F
	Metals Testing Task Force (TASARC).	Arsenic	2A, 2B, 2C
		Beryllium	4A, 4B, 4C, 4E
		Chromium	10A, 10B, 10C, 10D
		Manganese	23A, 23B, 23E
		Mercury	24B, 24C
		Nickel	27B, 27C, 27D, 27E
		Selenium	30A, 30B
National Toxicology Program	National Institute of Environmental Health Sciences.	Carbon Tetrachloride	6B
		Chlordane	7A
		Di-n-butyl phthalate	15A
		Endrin	18B
		Heptachlor	19B

*Not priority data needs.

[FR Doc. 02–2421 Filed 1–30–02; 8:45 am]

BILLING CODE 4163–70–P

Federal Register

Thursday,
January 31, 2002

Part IV

Department of Health and Human Services

Agency for Toxic Substances and Disease Registry

Update on the Status of the Superfund Substance-Specific Applied Research Program; Notice

DEPARTMENT OF HEALTH AND HUMAN SERVICES

Agency for Toxic Substances and Disease Registry

[ATSDR–178]

Update on the Status of the Superfund Substance-Specific Applied Research Program

AGENCY: Agency for Toxic Substances and Disease Registry (ATSDR), Department of Health and Human Services (HHS).

ACTION: Notice.

SUMMARY: This Notice provides the status of ATSDR's Superfund-mandated Substance-Specific Applied Research Program (SSARP) which was last updated in a **Federal Register** notice in 1999 (64 FR 2760). Authorized by the Comprehensive Environmental Response, Compensation, and Liability Act of 1980 (CERCLA, also known as the Superfund statute), as amended by the Superfund Amendments and Reauthorization Act of 1986 (SARA) 42 U.S.C. 9604 (i), this research program was initiated on October 17, 1991. At that time, a list of priority data needs for 38 priority hazardous substances frequently found at waste sites was announced in the **Federal Register** (56 FR 52178). The list was subsequently revised based on public comments and published in final form on November 16, 1992 (57 FR 54150).

The 38 substances, each of which is found on ATSDR's Priority List of Hazardous Substances (66 FR 54014, October 25, 2001), are aldrin/dieldrin, arsenic, benzene, beryllium, cadmium, carbon tetrachloride, chloroethane, chloroform, chromium, cyanide, p,p′-DDT,DDE,DDD, di(2-ethylhexyl) phthalate, lead, mercury, methylene chloride, nickel, polychlorinated biphenyl compounds (PCBs), polycyclic aromatic hydrocarbons (PAHs—includes 15 substances), selenium, tetrachloroethylene, toluene, trichloroethylene, vinyl chloride, and zinc.

On July 30, 1997, priority data needs for 12 additional hazardous substances frequently found at waste sites were determined and announced in the **Federal Register** (62 FR 40820). The 12 substances, each of which is included in ATSDR's Priority List of Hazardous Substances, are chlordane, 1,2-dibromo-3-chloropropane, di-n-butyl phthalate, disulfoton, endrin (includes endrin aldehyde), endosulfan (alpha-, beta-, and endosulfan sulfate), heptachlor (includes heptachlor epoxide), hexachlorobutadiene, hexachlorocyclohexane (alpha-, beta-, delta- and gamma-), manganese, methoxychlor, and toxaphene.

Recently, priority data needs for 10 additional hazardous substances frequently found at waste sites were determined and announced in the **Federal Register** (66 FR 42659). The 10 substances, each of which is included in ATSDR's Priority List of Hazardous Substances, are asbestos, benzidine, chlorinated dibenzo-p-dioxins, 1,2-dibromoethane, 1,2-dichloroethane, 1,1-dichloroethane, ethylbenzene, pentachlorophenol, 1,1,2,2-tetrachloroethane, and total xylenes. ATSDR invited the public to comment on the priority data needs for these substances during a period of 90 days. ATSDR is responding to the comments, and a final list of priority data needs will be published in the **Federal Register** in the near future.

To date, 190 priority data needs have been identified for the first 50 hazardous substances (Table 1). ATSDR fills these data needs through U.S. Environmental Protection Agency (EPA) regulatory mechanisms (test rules), private-sector voluntarism, and the direct use of CERCLA funds. Additional data needs are being addressed through collaboration with the National Toxicology Program (NTP), by ATSDR's Great Lakes Human Health Effects Research Program, and other agency programs. Currently, 101 priority data needs associated with the first 50 substances are being addressed via these mechanisms, and 62 priority data needs have been filled. Priority data needs documents describing ATSDR's rationale for prioritizing research needs for each substance are available. See **ADDRESSES** section of this Notice.

This Notice also serves as a continuous call for voluntary research proposals. Private-sector organizations may volunteer to conduct research to address specific priority data needs identified in this Notice by indicating their interest through submission of a letter of intent to ATSDR (see **ADDRESSES** section of this Notice). A Tri-Agency Superfund Applied Research Committee (TASARC) composed of scientists from ATSDR, NTP, and the EPA, will review all proposed voluntary research efforts.

DATES: ATSDR provides updates on the status of its Substance-Specific Applied Research Program approximately every 3 years. ATSDR considers the voluntary research effort to be important to the continuing implementation of the SSARP. Therefore, the agency strongly encourages private-sector organizations to volunteer at any time to conduct research to fill data needs until ATSDR announces that other research mechanisms are in place to address those specific data needs.

ADDRESSES: Private-sector organizations interested in volunteering to conduct research can write to Dr. William Cibulas, Chief, Research Implementation Branch, Division of Toxicology, ATSDR, 1600 Clifton Road, NE., Mailstop E–29, Atlanta, Georgia 30333, e-mail: wcibulas@cdc.gov. Information about pertinent ongoing or completed research that may fill priority data needs cited in this Notice should be similarly addressed.

Other Requirements: Projects that involve the collection of information from 10 or more individuals and funded by cooperative agreement will be subject to review by the Office of Management and Budget (OMB) under the Paperwork Reduction Act.

FOR FURTHER INFORMATION CONTACT: Dr. William Cibulas, Chief, Research Implementation Branch, Division of Toxicology, ATSDR, 1600 Clifton Road, NE., Mailstop E–29, Atlanta, Georgia 30333, telephone: (404) 498–0715, fax: (404) 498–0092. This notice will also be available on ATSDR's website at *http://www.atsdr.cdc.gov* or you may call the ATSDR Information Center at 1–888–422–8737.

SUPPLEMENTARY INFORMATION:

Background

CERCLA as amended by SARA (42 U.S.C. 9604(i)) requires that ATSDR (1) jointly with the EPA, develop and prioritize a list of hazardous substances found at National Priorities List (NPL) sites, (2) prepare toxicological profiles for these substances, and (3) assure the initiation of a research program to address identified data needs associated with the substances. Before starting such a program, ATSDR will consider recommendations of the Interagency Testing Committee on the type of research that should be done. This committee was established under Section 4(e) of the Toxic Substances Control Act of 1976 [15 U.S.C. 2604(e)](TSCA).

The major goals of the ATSDR SSARP are (1) to address the substance-specific information needs of the public and scientific community, and (2) to supply information necessary to improve the database used to conduct comprehensive public health assessments of populations living near hazardous waste sites. We anticipate that the information will help to establish linkages between levels of contaminants in the environment and levels in human tissue and organs

associated with adverse health effects. Once such links have been established, strategies to mitigate potentially harmful exposures can be developed. This program will also provide data that can be generalized to other substances or areas of science, including risk assessment of chemicals, thus creating a scientific information base for addressing a broader range of data needs.

ATSDR encourages the use of in vitro assessment methods and other innovative tools for filling priority data needs. For example, the agency believes that physiologically based pharmacokinetic (PBPK) modeling could serve as a valuable tool in predicting across route similarities (or differences) in toxicological responses to hazardous substances. Therefore, on a case-by-case basis, a priority data need can be filled using existing data and modeling. In addition, ATSDR is a member of NTP's Interagency Coordinating Committee on the Validation of Alternative Methods (ICCVAM) and supports development, validation, and acceptance of alternative toxicological test methods that reduce, refine, and replace the use of animals, as appropriate.

CERCLA section 104(i)(5)(D) states that it is the sense of Congress that the costs for conducting this research program ''be borne by the manufacturers and processors of the hazardous substance in question,'' as required in TSCA and the Federal Insecticide, Fungicide, and Rodenticide Act of 1972 (7 U.S.C. 136 *et seq.*) (FIFRA), or by cost recovery from responsible parties under CERCLA. To execute this statutory intent, ATSDR developed a plan whereby parts of the SSARP are being conducted via the regulatory mechanisms referenced (TSCA/FIFRA), private-sector voluntarism, and the direct use of CERCLA funds.

The TASARC, composed of scientists from ATSDR, NTP, and EPA, has been set up to:

(1) Advise ATSDR on the assignment of priorities for mechanisms to address data needs,

(2) Coordinate knowledge of research activities to avoid duplication of research in other programs and under other authorities,

(3) Advise ATSDR on issues of science related to substance-specific data needs, and

(4) Maintain a scheduled forum that provides an overall review of the ATSDR SSARP.

TASARC has met 10 times since the initiation of the SSARP. It has guided referral of data needs to EPA and the associated development of test rules through TSCA. In addition, it has endorsed the proposals of several private-sector organizations to conduct voluntary research. Furthermore, TASARC has become a forum for other federal agencies to bring forth their research agendas. For example, it has coordinated research efforts on hazardous pollutants with the Office of Air and Radiation, EPA. TASARC has developed testing guidelines for immunotoxicity; and has endorsed the use of decision-support methodologies such as physiologically based pharmacokinetic (PBPK) modeling and benchmark-dose modeling, where appropriate.

Additional data needs are being addressed through collaborative research efforts with NTP, by ATSDR's Great Lakes Human Health Effects Research Program, and other agency programs. To date, 101 priority data needs associated with the first 50 substances (Table 1) are being addressed via these mechanisms.

Criteria for Evaluating Status of Priority Data Needs

To update the activities covered under the SSARP, criteria for evaluating the status of the priority data needs were developed. Based on these criteria and the review of the current literature, a priority data need can be filled, or unchanged. In the event a priority data need is considered filled, it does not necessarily mean that the study has been completed and that ATSDR has accepted the data. It does, however, indicate that the agency no longer considers it a priority to initiate additional studies at this time.

The criteria for evaluating the status of the priority data needs are described below.

General Criteria

A priority data need is filled:

- If it has been referred to one of the implementation mechanisms and research has been initiated, or
- If an updated ATSDR toxicological profile or other recent review document contains relevant new (peer-reviewed and publicly available) studies since the finalization of the priority data needs document; and it is generally agreed that a priority data need no longer exists.

A priority data need remains unchanged:

- If no mechanism or information has been identified to address the priority data need, or
- If the priority data need is included in the ATSDR/EPA test rule under development, or is associated with a pilot substance in EPA's Voluntary Children's Chemical Evaluation Program.

Specific Criteria

Since the 1999 SSARP update in the **Federal Register**, ATSDR has developed specific criteria for two categories of data needs described below.

- *Epidemiologic studies*—A priority data need is filled if multiple new studies assessing key health end points are available in ATSDR's updated toxicological profile and/or ongoing studies have been identified, e.g., human health studies supported by ATSDR's Great Lakes Human Health Effects Research Program or the Minority Health Professions Foundation Research Program. In some cases, ATSDR indicates that it will continue to evaluate new data as they become available to determine whether additional studies are needed.
- *Exposure levels in humans*—A priority data need is filled if (a) there are current and adequate biomonitoring data for exposed populations associated with health effects (from published or ongoing studies), or (b) there are reference range data (e.g., National Health and Nutrition Examination Survey (NHANES)) or generally agreed upon background population levels. In the latter case, ATSDR acknowledges that reference concentration data can support exposure and health assessments at waste sites, but the agency also continues to recognize the importance of collecting additional data on uniquely exposed populations at waste sites.

It should be noted that the status of the priority data needs may change in future updates of the SSARP as new information becomes available. Further, during the literature review, new studies may be identified suggesting other effects of concern, such as those related to endocrine disruptors and children's health, which have not been included in the original list of priority data needs. In such cases, additional priority data needs may be added to the research agenda. For example, for both tetrachloroethylene and trichloroethylene, the priority data need for developmental neurotoxicity study is now listed separately from the priority data need for one-species developmental toxicity (see Table 1). Therefore, the total number of priority data needs changed accordingly, i.e., from a total of 188 reported in the **Federal Register** notice in 1999 (64 FR 2760) to 190 in the current update notice. Also, research needs previously considered filled might be reassigned as priority data needs, e.g., if a previously derived Minimal Risk Level (MRL), a

health guidance value, was withdrawn from the updated ATSDR toxicological profile. Finally, a priority data need previously associated with an implementation mechanism, may no longer be addressed via that mechanism (or any other mechanism) if the study being conducted to fill the specific priority data need is discontinued.

Based on the above criteria, 62 priority data needs have been filled.

Update of Activities in the SSARP

An update of the activities associated with the mechanisms for implementing the ATSDR Substance-Specific Applied Research Program (SSARP) is discussed below. Publications and reports of research completed under the various implementation mechanisms are available by writing to ATSDR (*see* **ADDRESSES** section of this Notice).

A. TSCA/FIFRA

In developing and implementing the SSARP, ATSDR, NTP, and EPA have identified a subset of priority data needs for substances of mutual interest to the federal programs. These data needs are being addressed through a program of toxicologic testing under TSCA according to established procedures and guidelines. On several occasions when ATSDR identified priority data needs for oral exposure, other agencies needed inhalation data. In response, ATSDR is considering proposals to conduct inhalation studies in conjunction with physiologically based pharmacokinetic (PBPK) studies in lieu of oral studies. ATSDR expects that inhalation data derived from these studies can be used with PBPK modeling to address its oral toxicity data needs. Currently, an EPA/ATSDR test rule, under development, includes eight ATSDR substances, i.e., benzene, chloroethane, cyanide (hydrogen cyanide and sodium cyanide), methylene chloride, tetrachloroethylene, toluene and trichloroethylene, and addresses 18 ATSDR priority data needs (Table 2). The test rule is presently undergoing ATSDR and EPA final review. We anticipate it will be available for public comment in the near future.

TASARC has established an interagency task force on metals and has conducted a survey to assess federal agencies' needs for testing metals. Currently, the task force has agreed to examine at least seven metals included in the ATSDR's SSARP (arsenic, beryllium, chromium, manganese, mercury, nickel, and selenium, associated with 22 priority data needs) (Table 2). The EPA will solicit testing proposals for these metals and pursue test rule development for these metals at a later date.

B. Private-Sector Voluntarism

On February 7, 1992, as part of the Substance-Specific Applied Research Program (SSARP), ATSDR announced a set of proposed procedures for conducting voluntary research (57 FR 4758). Revisions based on public comments were published on November 16, 1992 (57 FR 54160). Private-sector organizations were encouraged to volunteer to conduct research to fill specific priority data needs at no expense to ATSDR.

To date, ATSDR has established agreements with the American Chemistry Council (ACC) [formerly the Chemical Manufacturers Association (CMA)], the General Electric Company (GE), and the Halogenated Solvents Industry Alliance, Inc. (HSIA) to conduct substance-specific research (Table 2). Through the voluntary research efforts of these organizations, at least 16 research needs for polychlorinated biphenyl compounds [PCBs], methylene chloride, tetrachloroethylene, trichloroethylene, and vinyl chloride are being addressed (Table 2).

American Chemistry Council (ACC) Formerly the Chemical Manufacturers Association (CMA)

In 1996, ATSDR entered into a memorandum of understanding (MOU) with ACC covering two studies, ''Vinyl chloride: Combined inhalation two-generation reproduction and developmental toxicity study in CD rats.'' In November 2000, ATSDR accepted the final reports of the studies.

General Electric Company (GE)

In 1995, ATSDR entered into an MOU with SSARP covering two studies on PCBs: (1) ''An assessment of the chronic toxicity and oncogenicity of Aroclors 1016, 1242, 1254, and 1260 administered in diet to rats,'' including ''PCB congener analyses,'' and (2) ''Metabolite detection as a tool for determining naturally occurring aerobic PCB biodegradation.'' While the above studies do not address ATSDR's priority data needs for PCBs, they do address other agency research needs for these substances.

The agency accepted the final report for the chronic toxicity and oncogenicity of the four aroclors in October 1997,and the final report for the aerobic biodegradation study in July 1999.

Halogenated Solvents Industry Alliance (HSIA)

In 1995, ATSDR entered into an MOU with HSIA covering studies to address three priority data needs for methylene chloride. The studies, ''Addressing priority data needs for methylene chloride with physiologically based pharmacokinetic modeling,'' evaluated acute- and subchronic-duration toxicity and developmental toxicity via oral exposure. The data were obtained using physiologically based pharmacokinetic modeling. The final report for these studies was accepted by the agency in February 1997.

In September 1999, HSIA entered into a second MOU with ATSDR to conduct a study, ''Methylene chloride: 28 day inhalation toxicity study in the rat to assess potential immunotoxicity.'' The agency accepted the final report for the study in November 2000. HSIA is in the process of obtaining oral data from the inhalation study using PBPK modeling. This is because ATSDR has determined ingestion of contaminated environmental media to be the primary exposure route at hazardous waste sites. HSIA intends to conduct similar immunotoxicity studies for tetrachloroethylene and trichloroethylene.

In February 2000, ATSDR signed a third MOU with HSIA, which conducted a study, ''Trichloroethylene: Inhalation Developmental Toxicity Study in CD Rats.'' The agency accepted the final report of the study in September 2001. As in the case of the methylene chloride immunotoxicity study described above, HSIA intends to obtain developmental toxicity data for oral exposure using PBPK modeling. Also, HSIA plans to perform similar developmental toxicity studies for tetrachloroethylene. Finally, ATSDR and HSIA are continuing discussion to address additional priority data needs for trichloroethylene and tetrachloroethylene in conjunction with EPA's pilot studies for its Voluntary Children's Chemical Evaluation Program.

In addition to the substance-specific MOUs described above, in March 2001, ATSDR also signed an MOU with the Electric Power Research Institute, Inc. (EPRI) on ''Verification of Techniques for Assessing the Effects of Neurotoxicants on Neurodevelopment in Children.'' The objective of the study is to validate a battery of neurodevelopmental tests for use in assessing the effects of prenatal or postnatal exposure to developmental neurotoxicants. The study includes an evaluation of a broad spectrum of

functions; therefore, the validation of these tests will be useful for further assessing the developmental neurotoxicity of some of the ATSDR priority substances such as the PCBs, methylmercury, and lead. In addition to the private sector support (EPRI), ATSDR is coordinating a federal effort (via interagency agreements with EPA, Food and Drug Administration [FDA] and NIEHS) to support the study.

C. CERCLA-Funded Research (Minority Health Professions Foundation Research Program)

During FY 1992, ATSDR announced a $4 million cooperative agreement program with the Minority Health Professions Foundation (MHPF) to support substance-specific investigations. A not-for-profit Internal Revenue Code 501(c)(3) organization, the MHPF comprises 11 minority health professions schools. Its primary mission is to research health problems that disproportionately affect poor and minority citizens. The purpose of this cooperative agreement is to address substance-specific data needs for priority hazardous substances identified by ATSDR. In addition, this agreement strengthens the environmental health research opportunities for scientists and students at MHPF member institutions and enhances existing disciplinary capacities to conduct research in toxicology and environmental health.

In the first 5-year project period that concluded during FY 1997, nine priority data needs for 21 priority hazardous substances and 22 other research needs for these and other substances were addressed. The MHPF has developed a report, ''Environmental Health and Toxicology Research Program: Meeting Environmental Health Challenges Through Research, Education, and Service,'' that describes the research findings and other successes from the first 5 years of the program. New research initiated in the second 5-year project period includes studies to address 10 additional priority data needs for chlordane, 1,2-dibromo-3-chloropropane, di-n-butyl phthalate, lead, manganese, the polycyclic aromatic hydrocarbons (PAHs), zinc, and eight other research needs.

To date, the MHPF activities have resulted in the publication of 50 manuscripts in peer-reviewed journals. The institutions receiving awards and their current respective research projects that fill identified research needs are listed in Table 2.

D. National Toxicology Program (NTP)

Section 104(i)(5) of CERCLA directs the administrator of ATSDR (in consultation with the administrator of EPA and agencies and programs of the Public Health Service) to assess whether adequate information on the health effects of priority hazardous substances found at NPL sites is available. Where adequate information is not available, ATSDR, in cooperation with the National Toxicology Program (NTP), is required to assure the initiation of a program of research designed to determine these health effects (and techniques for developing methods to determine such health effects).

ATSDR has been collaborating with NTP to address priority data needs of mutual interest, including (1) di-n-butyl phthalate: dose-response data in animals for acute-duration exposure via oral exposure route, (2) carbon tetrachloride: immunotoxicology study via oral exposure, and (3) heptachlor: reproductive toxicity study via oral exposure (Table 2).

E. Great Lakes Human Health Effects Research Program

Some of the priority data needs identified in the SSARP have been independently identified as research needs through the ATSDR Great Lakes Human Health Effects Research Program, a separate research program.

In support of the Great Lakes Critical Programs Act of 1990, ATSDR announced in FY 1992 the availability of $2 million for a grant program to conduct research on the potential for short- and long-term adverse health effects from consumption of contaminated fish from the Great Lakes basin. Research undertaken through this program is intended to build on and amplify the results of past and ongoing fish consumption research in the Great Lakes basin. The ATSDR-supported research projects focus on known high-risk populations to define further the human health consequences of exposure to persistent toxic substances (PTSs) identified in the Great Lakes basin. These at-risk populations include sport anglers; African Americans, Asians and other non-English speaking populations; pregnant women; fetuses, nursing infants, and children of mothers who consume contaminated Great Lakes sport fish; the elderly, and the urban poor. To date, the research activities of the ATSDR Great Lakes research program have resulted in 55 publications in peer-reviewed journals.

Currently, 14 priority data needs for 24 priority hazardous substances (including 15 PAHs) identified in the SSARP are being addressed through this program. The institutions receiving awards and their respective studies are listed in Table 2.

F. Other ATSDR Programs

In its role as a public health agency addressing environmental health, ATSDR may collect human data to validate substance-specific exposure and toxicity findings. The need for additional information on levels of contaminants in humans has been identified, and remains as a priority data need for 49 of the first 50 priority substances (Table 1). ATSDR will obtain this information through exposure and health effects studies, and through establishing and using substance-specific subregistries of people within the agency's National Exposure Registry who have potentially been exposed to these substances.

The list of the 50 priority hazardous substances in the SSARP was forwarded to ATSDR's Exposure and Disease Registry Branch (EDRB), Division of Health Studies, for consideration as potential candidates for subregistries of exposed persons, based on criteria described in its 1994 document, ''National Exposure Registry: Policies and Procedures Manual (Revised),'' Agency for Toxic Substances and Disease Registry, Public Health Service, U.S. Department of Health and Human Services, Atlanta, Georgia, NTIS Publication No. PB95–154571. To date, of the first 50 priority substances in the SSARP, ATSDR has established subregistries for benzene, chromium, and trichloroethylene. Arsenic, cadmium, and lead are not considered to be in the pool of candidate substances for an exposure registry at this time, and, therefore, are not considered priority data needs. This decision will be reevaluated as more information on the chemicals and exposure sites become available. All other substances in the SSARP (Table 1) remain in the candidate pool and therefore continue to be classified as priority data needs. They will be considered for selection as primary contaminants during each selection process.

G. Conclusion

The results of the research conducted via the SSARP are expected to provide information necessary to improve the database used to conduct comprehensive public health assessments of populations living near hazardous waste sites. The information will enable the agency to establish linkages between levels of contaminants in the environment and levels in human tissue and organs associated with adverse health effects, ultimately helping to determine methods for interdicting exposure and mitigating toxicity. This program will also provide

data that can be generalized to other substances or areas of science, including risk assessment of chemicals, thus creating a scientific information base for addressing a broader range of data needs. The agency plans to provide an update on the status of this research program approximately every 3 years.

Dated: January 25, 2002.

Georgi Jones,

Director, Office of Policy and External Affairs, Agency for Toxic Substances and Disease Registry.

TABLE 1.—ATSDR'S SUBSTANCE-SPECIFIC PRIORITY DATA NEEDS FOR 50 PRIORITY HAZARDOUS SUBSTANCES

Substances	PDN ID [1]	PDN description	Program [2]	Status change [3]	Comments [4]
Aldrin/Dieldrin	1A	Dose-response data in animals for intermediate-duration oral exposure.	.....	Filled	An MRL was derived in the 2000 updated toxicological profile.
	1B	Bioavailability from soil.			
	1C	Exposure levels in humans living near hazardous waste sites and other populations, such as exposed workers.	.....	.....	This priority data need, previously addressed in a study in the Great Lakes research program, is no longer investigated in that study.
	1D	Potential candidate for subregistry of exposed persons.	ATSDR.		
Arsenic	2A	Comparative toxicokinetic studies to determine if an appropriate animal species can be identified.	EPA.		
	2B	Half-lives in surface water, groundwater.	EPA.		
	2C	Bioavailability from soil	EPA.		
	2D	Exposure levels in humans living near hazardous waste sites and other populations, such as exposed workers.	G. Lakes	Filled	Background level data are available in ATSDR's 1993 toxicological profile, and at least seven ATSDR studies that evaluated urine arsenic levels and potential adverse health effects are available. Also, additional studies are available in ATSDR's 2000 updated toxicological profile.
Benzene	3A	Dose-response data in animals for acute- and intermediate-duration oral exposure. The subchronic study should include an extended reproductive organ histopathology.	EPA.		
	3B	Two-species developmental toxicity study via oral exposure.	EPA	.....	Previously planned study in the MHPF research program to address this priority data need was canceled.
	3C	Neurotoxicology battery of tests via oral exposure.	EPA.		
	3D	Epidemiologic studies on the health effects of benzene (Special emphasis end points include immunotoxicity).	.....	Filled	Based on an evaluation of the data in ATSDR's 1997 updated toxicological profile. ATSDR will continue to evaluate new data as they become available to determine if additional studies are needed.
	3E	Exposure levels in humans living near hazardous waste sites and other populations, such as exposed workers.	.....	Filled	Reference range concentrations are available (Ashley et al. 1992, 1994; Needham et al. 1995), and at least one ATSDR study that evaluated blood benzene levels and potential adverse health effects is available. ATSDR acknowledges that reference concentration data can support exposure and health assessments at waste sites, but the agency also continues to recognize the importance of collecting additional data on uniquely exposed populations at waste sites.

TABLE 1.—ATSDR'S SUBSTANCE-SPECIFIC PRIORITY DATA NEEDS FOR 50 PRIORITY HAZARDOUS SUBSTANCES—Continued

Substances	PDN ID [1]	PDN description	Program [2]	Status change [3]	Comments [4]
Beryllium	4A	Dose-response data in animals for acute- and intermediate-duration inhalation exposures. The sub-chronic study should include extended reproductive organ histopathology.	EPA.		
	4B	Two-species developmental toxicity study via inhalation exposure.	EPA.		
	4C	Environmental fate in air; factors affecting bioavailability in air.	EPA.		
	4D	Analytical methods to determine environmental speciation.	.....	Filled	Based on an evaluation of the data in ATSDR's 2000 updated toxicological profile.
	4E	Immunotoxicology battery of tests following oral exposure.	EPA.		
	4F	Exposure levels in humans living near hazardous waste sites and other populations, such as exposed workers.	.....	Filled	Reference range concentrations in urine are available (Paschal et al. 1998). ATSDR acknowledges that reference concentration data can support exposure and health assessments at waste sites, but the agency also continues to recognize the importance of collecting additional data on uniquely exposed populations at waste sites.
	4G	Potential candidate for subregistry of exposed persons.	ATSDR.		
Cadmium	5A	Analytical methods for biological tissues and fluids and environmental media.	.....	Filled	Based on an evaluation of the data in ATSDR's 1999 updated toxicological profile.
	5B	Exposure levels in humans living near hazardous waste sites and other populations, such as exposed workers.	G. Lakes	Filled	Referent population urine cadmium levels are available (NHANES III), and at least nine ATSDR studies that evaluated blood and urine cadmium levels and potential adverse health effects are available.
Carbon tetrachloride	6A	Dose-response data in animals for chronic oral exposure. The study should include extended reproductive organ and nervous tissue histopathology.			
	6B	Immunotoxicology battery of tests via oral exposure.	NTP	Filled	NTP dose-finding study and one new study in ATSDR's 1994 updated toxicological profile addressed the priority data need.
	6C	Half-life in soil	.....	Filled	One new study in ATSDR's 1994 updated toxicological profile provided information on half-life in soil.
	6D	Exposure levels in humans living near hazardous waste sites and other populations, such as exposed workers.	.....	Filled	Reference range concentrations in blood are available (Ashley et al. 1992, 1994; Needham et al. 1995). ATSDR acknowledges that reference concentration data can support exposure and health assessments at waste sites, but the agency also continues to recognize the importance of collecting additional data on uniquely exposed populations at waste sites.

TABLE 1.—ATSDR'S SUBSTANCE-SPECIFIC PRIORITY DATA NEEDS FOR 50 PRIORITY HAZARDOUS SUBSTANCES—Continued

Substances	PDN ID [1]	PDN description	Program [2]	Status change [3]	Comments [4]
	6E	Potential candidate for subregistry of exposed persons.	ATSDR.		
Chlordane	7A	Oral multigenerational studies to evaluate reproductive toxicity.	MHPF ..... NTP.	Filled	Availability of ongoing study in the MHPF research program and anticipated initiation of an NTP study in 2002.
	7B	Bioavailability studies following ingestion of contaminated media.			
	7C	Exposure levels in humans living near hazardous waste sites and other populations potentially exposed to chlordane.			
	7D	Potential candidate for subregistry of exposed persons.	ATSDR.		
Chloroethane	8A	Dose-response data in animals for acute- and intermediate-duration oral exposures. The subchronic study should include an evaluation of immune and nervous system tissues, and extended reproductive organ histopathology.	EPA.		
	8B	Dose-response data in animals for chronic inhalation exposures. The study should include an evaluation of nervous system tissues.	EPA.		
	8C	Potential candidate for subregistry of exposed persons.	ATSDR.		
Chloroform	9A	Dose-response data in animals for intermediate-duration oral exposure.	.....	Filled	An MRL was derived in ATSDR's 1997 updated toxicological profile.
	9B	Epidemiologic studies on the health effects of chloroform (Special emphasis end points include cancer, neurotoxicity, reproductive and developmental toxicity, hepatotoxicity, and renal toxicity).	.....	Filled	Based on an evaluation of the data in ATSDR's 1997 updated toxicological profile. ATSDR will continue to evaluate new data as they become available to determine if additional studies are needed.
	9C	Exposure levels in humans living near hazardous waste sites and other populations, such as exposed workers.	.....	Filled	Reference range concentrations in blood are available (Ashley et al. 1992, 1994; and Needham et al. 1995). ATSDR acknowledges that reference concentration data can support exposure and health assessments at waste sites, but the agency also continues to recognize the importance of collecting additional data on uniquely exposed populations at waste sites.

TABLE 1.—ATSDR'S SUBSTANCE-SPECIFIC PRIORITY DATA NEEDS FOR 50 PRIORITY HAZARDOUS SUBSTANCES—Continued

Substances	PDN ID [1]	PDN description	Program [2]	Status change [3]	Comments [4]
	9D	Potential candidate for subregistry of exposed persons.	ATSDR.		
Chromium	10A	Dose-response data in animals for acute-duration exposure to chromium (VI) and (III) via oral exposure and for intermediate-duration exposure to chromium (VI) via oral exposure.	EPA.		
	10B	Multigeneration reproductive toxicity study via oral exposure to chromium (III) and (VI).	EPA.		
	10C	Immunotoxicology battery of tests following oral exposure to chromium (III) and (VI).	EPA.		
	10D	Two-species developmental toxicity study via oral exposure to chromium (III) and (VI).	EPA.		
	10E	Exposure levels in humans living near hazardous waste sites and other populations, such as exposed workers.	G. Lakes	Filled	Reference range concentrations in urine are available (Paschal et al. 1998). Also, at least two ATSDR studies that evaluated urine chromium levels and potential adverse health effects are available. In addition, this PDN is being addressed in a study in the Great Lakes research program.
Cyanide	11A	Dose-response data in animals for acute- and intermediate-duration exposures via inhalation. The subchronic study should include extended reproductive organ histopathology and evaluation of neurobehavioral and neuropathological end points.	EPA.		
	11B	Two-species developmental toxicity study via oral exposure.	EPA.		
	11C	Evaluation of the environmental fate of cyanide in soil.	.....	Filled	A study addressing the priority data need was submitted by industry to EPA in response to EPA's solicitation for proposals for test rule making. Scientists from EPA and ATSDR reviewed the study and considered that this research need is no longer a priority.
	11D	Exposure levels in humans living near hazardous waste sites and other populations, such as exposed workers.			
	11E	Potential candidate for subregistry of exposed persons.	ATSDR.		
1,2-dibromo-3-chloropro pane	12A	Dose-response data in animals for acute- duration exposure via the oral route (including reproductive organ histopathology).			
	12B	Dose-response data in animals for chronic-duration exposure via the oral route (including reproductive organ histopathology).			
	12C	Two-species developmental toxicity study via oral exposure.			

TABLE 1.—ATSDR'S SUBSTANCE-SPECIFIC PRIORITY DATA NEEDS FOR 50 PRIORITY HAZARDOUS SUBSTANCES—Continued

Substances	PDN ID [1]	PDN description	Program [2]	Status change [3]	Comments [4]
	12D	Immunotoxicology testing battery via oral exposure.	.....	.....	Previously planned study in the MHPF research program to address this priority data need was canceled.
	12E	Neurotoxicology testing battery via oral exposure.	.....	.....	Previously planned study in the MHPF research program to address this priority data need was canceled.
	12F	Exposure levels in humans living near hazardous waste sites and other exposed populations, such as exposed workers.			
	12G	Potential candidate for subregistry of exposed persons.	ATSDR.		
DDT	13A	Dose-response data in animals for chronic-duration oral exposure.			
	13B	Comparative toxicokinetic study (across routes/species).			
	13C	Bioavailability and bioaccumulation from soil.			
	13D	Epidemiologic studies on the health of DDT, DDD, and DDE (Special emphasis end points include immunotoxicity, and reproductive and developmental toxicity.	G. Lakes	Filled	Multiple new studies in ATSDR's 2000 updated toxicological profile and five ongoing studies in the Great Lakes research program are available.
	13E	Exposure levels in humans living near hazardous waste sites and other populations, such as exposed workers.	G. Lakes.		
	13F	Potential candidate for subregistry of exposed persons.	ATSDR.		
Di(2-ethyl-hexyl)phthalate	14A	Epidemiologic studies on the health effects of DEHP (Special emphasis end points include cancer).			
	14B	Dose-response data in animals for acute- and intermediate-duration oral exposures. The subchronic study should include an extended histopathologic evaluation of the immunologic and neurologic systems.	.....	.....	This research need is reassigned as a priority data need because of the data in ATSDR's 2000 updated toxicological profile. Specifically, the previously developed MRL for acute-duration (1993 toxicological profile) was withdrawn, and a provisional MRL for intermediate-duration was derived replacing the previously established one.
	14C	Multigeneration reproductive toxicity study via oral exposure.	.....	.....	This research need is reassigned as a priority data need based on an evaluation of the data in ATSDR's 2000 updated toxicological profile. Also, the NTP Center for the Evaluation of Risks to Human Reproduction Expert Panel Report (October 2000) has identified critical data needs for reproductive toxicity
	14D	Comparative toxicokinetic studies (Studies designed to examine how primates metabolize and distribute DEHP as compared with rodents via oral exposure).	.....	.....	The NTP Center for the Evaluation of Risks to Human Reproduction Expert Panel Report (October 2000) has also identified critical data needs for toxicokinetic information.
	14E	Exposure levels in humans living near hazardous waste sites and other populations, such as exposed workers.			
	14F	Potential candidate for subregistry of exposed persons.	ATSDR.		

TABLE 1.—ATSDR'S SUBSTANCE-SPECIFIC PRIORITY DATA NEEDS FOR 50 PRIORITY HAZARDOUS SUBSTANCES—Continued

Substances	PDN ID [1]	PDN description	Program [2]	Status change [3]	Comments [4]
Di-n-butyl phthalate	15A	Dose-response data in animals for acute-duration exposure via the oral route.	NTP	Filled	NTP completed a 14-day study.
	15B	Dose-response data in animals for chronic-duration exposure via the oral route.			
	15C	Carcinogenicity studies via oral exposure.			
	15D	*In vivo* genotoxicity studies	MHPF	Filled	Availability of ongoing studies in the MHPF research program.
	15E	Immunotoxicology studies via oral exposure.			Previously planned study in the MHPF research program to address this priority data need was canceled.
	15F	Neurotoxicity studies via oral exposure.			Previously planned study in the MHPF research program to address this priority data need was canceled.
	15G	Exposure levels in humans living near hazardous waste sites and other populations, such as exposed workers.			
	15H	Environmental fate of di-n-butyl phthalate in environmental media.			
	15I	Bioavailability in contaminated environmental media near hazardous waste sites.			
	15J	Potential candidate for subregistry of exposed persons.	ATSDR.		
Disulfoton	16A	Immunotoxicology testing battery following oral exposure.			
	16B	Exposure levels of disulfoton in tissues/fluids for populations living near hazardous waste sites and other populations, such as exposed workers.			
	16C	Disulfoton should be considered as a potential candidate for a subregistry of exposed persons.	ATSDR.		
Endosulfan (α,β, and sulfate)	17A	Acute-duration oral exposure.			
	17B	Data on sensitive neurologic end point following oral exposure.			
	17C	Exposure levels in humans living near hazardous waste sites and other populations, such as exposed workers.			
	17D	Data on the bioavailability of endosulfan from soil.			
	17E	Potential candidate for subregistry of exposed persons.	ATSDR.		
Endrin/endrin aldehyde	18A	Dose-response animal data for acute oral exposure to endrin.			
	18B	Multigeneration reproductive toxicity studies via oral exposure to endrin.	NTP.		
	18C	Accurately describe the toxicokinetics of endrin and its degradation products and identify the animal species to be used as the most appropriate model for human exposure.			
	18D	Exposure levels for endrin and its degradation products in humans living near hazardous waste sites.			

TABLE 1.—ATSDR'S SUBSTANCE-SPECIFIC PRIORITY DATA NEEDS FOR 50 PRIORITY HAZARDOUS SUBSTANCES—Continued

Substances	PDN ID [1]	PDN description	Program [2]	Status change [3]	Comments [4]
	18E	Accurately describe the environmental fate of endrin, including environmental breakdown products and rates, media half-lives, and chemical and physical properties of the breakdown products that help predict mobility and volatility.			
	18F	Potential candidate for subregistry of exposed persons.	ATSDR.		
Heptachlor/heptachlor epoxide	19A	Dose-response animal data for acute- and intermediate-duration oral exposures, including immunopathology.			
	19B	Multigeneration reproductive toxicity studies via the oral route of exposure.	NTP	Filled	Availability of publication ''The effects of perinatal/juvenile heptachlor exposure on adult immune and reproductive system function in rats'' by Smialowicz et al. (2001), Toxicological Sciences 61:164–75.
	19C	Two-species developmental toxicity studies via the oral route of exposure.			
	19D	Exposure levels in humans living near hazardous waste sites and other populations, such as exposed workers.			
	19E	Bioavailability from contaminated air, water, and soil and bioaccumulation potential.			
	19F	Potential candidate for subregistry of exposed persons.	ATSDR.		
Hexachloro-butadiene	20A	Dose-response data in animals for acute-duration exposure via the oral route.			
	20B	Exposure levels in humans living near hazardous waste sites and other populations, such as exposed workers.			
	20C	Environmental fate studies that determine the extent to which hexachlorobutadiene volatilizes from soil, and studies that determine the reactions and rates which drive degradation in soil.			
	20D	Bioavailability studies in soil and plants.			
	20E	Potential candidate for subregistry of exposed person.	ATSDR.		
Hexachloro-cyclohexane (α, β, δ, and γ).	21A	Dose-response data for chronic-duration oral exposure.	.....	Filled	An MRL was derived in ATSDR's 1999 updated toxicological profile.
	21B	Mechanistic studies on the neurotoxicity, hepatotoxicity, reproductive toxicity, and immunotoxicity of hexachlorocyclohexane.			
	21C	Exposure levels in humans living near hazardous waste sites and other populations, such as exposed workers.	.....	Filled	Reference range concentrations in blood are available. ATSDR acknowledges that reference concentration data can support exposure and health assessments at waste sites, but the agency also continues to recognize the importance of collecting additional data on uniquely exposed populations at waste sites.

TABLE 1.—ATSDR'S SUBSTANCE-SPECIFIC PRIORITY DATA NEEDS FOR 50 PRIORITY HAZARDOUS SUBSTANCES—Continued

Substances	PDN ID [1]	PDN description	Program [2]	Status change [3]	Comments [4]
	21D	Potential candidate for subregistry of exposed persons.	ATSDR.		
Lead	22A	Mechanistic studies on the neurotoxic effects of lead.	MHPF	Filled	Multiple new studies (13 publications from the MHPF research program + numerous new published studies in ATSDR's 1999 updated toxicological profile) are available.
	22B	Analytical methods for tissue levels.	MHPF	Filled	A publication from the MHPF research program and numerous studies in ATSDR's 1999 toxicological profile are available.
	22C	Exposure levels in humans living near hazardous waste sites and other populations, such as exposed workers.	MHPF G. Lakes	Filled	Referent population blood and urine lead levels are available (NHANES III; Paschal et al. 1998), and at least 19 ATSDR studies that evaluated blood lead levels and potential adverse health effects are available.
Manganese	23A	Dose-response data for acute- and intermediate-duration oral exposures (the subchronic study should include reproductive histopathology and an evaluation of immunologic parameters including manganese effects on plaque-forming cells (SRBC), surface markers (D4:D8 ratio), and delayed hypersensitivity reactions).	MHPF EPA	Filled	Availability of ongoing studies in the MHPF research program.
	23B	Toxicokinetic studies on animals to investigate uptake and absorption, relative uptake of differing manganese compounds, metabolism of manganese, and interaction of manganese with other substances following oral exposure.	MHPF EPA	Filled	Avaialbiltiy of ongoing studies in the MHPF research program.
	23C	Epidemiological studies on the health effects of manganese (Special emphasis end points include neurologic, reproductive, developmental, immunologic, and cancer).		Filled	Based on evaluation of the data in ATSDR's 2000 updated toxicological profile. ATSDR will continue to evaluate new data as they become available to determine if additional studies are needed.
	23D	Exposure levels in humans living near hazardous waste sites and other populations, such as exposed workers.			
	23E	Relative bioavailability of different manganese compounds and bioavialability of manganese from soil.	EPA.		
Mercury	24A	Multigeneration reproductive toxicity study via oral exposure.	MHPF	Filled	Three publications from the MHPF research program are available.
	24B	Dose-response data in animals for chronic-duration oral exposure.	EPA	Filled	An MRL was derived in ATSDR's 1999 updated toxicological profile.
	24C	Immunotoxicology battery of tests via oral exposure.	EPA.		

TABLE 1.—ATSDR'S SUBSTANCE-SPECIFIC PRIORITY DATA NEEDS FOR 50 PRIORITY HAZARDOUS SUBSTANCES—Continued

Substances	PDN ID [1]	PDN description	Program [2]	Status change [3]	Comments [4]
	24D	Exposure levels in humans living near hazardous waste sites and other populations, such as exposed workers.	G. Lakes	Filled	Background levels data are available in ATSDR's 1997 updated toxicological profile, and multiple studies that evaluated blood, urine, and hair mercury levels and potential adverse health effects are available (Five ATSDR studies + at least eight ongoing studies of the Great Lakes research program).
	24E	Potential candidate for subregistry of exposed persons.	ATSDR.		
Methoxychlor	25A	Evaluate neurologic effects after long-term, low-level oral exposure.	.....	Filled	Based on an evaluation of the data in ATSDR's 2000 updated toxicological profile.
	25B	Exposure levels of methoxychlor and primary metabolities in humans living near hazardous waste sites and in those individuals with the potential to ingest it.			
	25C	Evaluate the fate, transport, and levels of the degradation products of methoxychlor in soil.			
	25D	Potential candidate for subregistry of exposed persons.	ATSDR.		
Methylene chloride	26A	Dose-response data in animals for acute- and intermediate-duration oral exposure. The subchronic study should include extended reproductive organ histopathology, neuropathology, and immunopathology.	EPA ..... Vol Res.	Filled	ATSDR accepted HSIA's toxicity study for acute- and intermediate-exposure duration in February 1997. ATSDR accepted HSIAs immunotoxicity study via inhalation in November 2000. Currently, HSIA is conducting PBPK modeling to obtain data for oral exposure using the data from its inhalation study. Neurotoxicity screening battery testing remains in the ATSDR/EPA test rule under development.
	26B	Two-species developmental toxicity study via the oral route.	EPA ..... Vol Res.	Filled	ATSDR accepted HSIA's study in February 1997.
	26C	Exposure levels in humans living near hazardous waste sites and other populations, such as exposed workers.	.....	Filled	Reference range concentrations in blood are available (Ashley et al. 1992, 1994; Needham et al. 1995). ATSDR acknowledges that reference concentration data can support exposure and health assessments at waste sites, but the agency also continues to recognize the importance of collecting additional data on uniquely exposed populations at waste sites.
	26D	Potential candidate for subregistry of exposed persons.	ATSDR.		
Nickel	27A	Epidemiologic studies on the health effects of nickel (Special emphasis end points include reproductive toxicity.	.....	Filled	At least two new relevant studies in ATSDR's 1997 updated toxicological profile are available. ATSDR will continue to evaluate new data as they become available to determine if additional studies are needed.
	27B	Two-species developmental toxicity study via the oral route.	EPA	Filed	In ATSDR's 1997 updated toxicological profile, a new study confirming the results of two previous studies is available

TABLE 1.—ATSDR'S SUBSTANCE-SPECIFIC PRIORITY DATA NEEDS FOR 50 PRIORITY HAZARDOUS SUBSTANCES—Continued

Substances	PDN ID [1]	PDN description	Program [2]	Status change [3]	Comments [4]
	27C	Dose-response data in animals for acute- and intermediate-duration oral exposures.	EPA.		
	27D	Neurotoxicology battery of tests via oral exposure.	EPA.		
	27E	Bioavailability of nickel from soil ...	EPA.		
	27F	Exposure levels in humans living near hazardous waste sites and other populations, such as exposed workers.	G. Lakes	Filled	Based on availability of the study in the Great Lakes research program and an evaluation of ATSDR's 1997 updated toxicological profile.
	27G	Potential candidate for subregistry of exposed persons.	ATSDR.		
PAHs (Includes 15 substances)	28A	Dose-response data in animals for intermediate-duration oral exposures. The subchronic study should include extended reproductive organ histopathology and immunopathology.	MHPF	Filled	MRLs for four PAHs were derived in ATSDR's 1995 updated toxological profile. A publication from the MHPF research program addressing this priority data need is available.
	28B	Two-species developmental toxicity study via inhalation or oral exposure.	MHPF	Filled	Ongoing studies in the MHPF research program and one publication from the program are available.
	28C	Mechanistic studies on PAHs, on how mixtures of PAHs can influence the ultimate activation of PAHs, and on how PAHs affect rapidly proliferating tissues.	MHPF	Filled	At least 12 new studies in ATSDR's 1995 updated toxicological profile and two publications from the MHPF research program are available.
	28D	Dose-response data in animals for acute- and intermediate-duration inhalation exposures. the subchronic study should include extended reproductive organ histopathology and immunopathology.	MHPF	Filled	Ongoing studies in the MHPF research program and one publication from the program are available.
	28E	Epidemiologic studies on the health effects of PAHs (Special emphasis end points include cancer, dermal, hemolymphatic, and hepatic toxicity.	.....	Filled	At least three new studies in ATSDR's 1995 updated toxicological profile are available. ATSDR will continue to evaluate new data as they become available to determine if additional studies are needed.
	28F	Exposure levels in humans living near hazardous waste sites and other populations, such as exposed workers.	G. Lakes	Filled	Based on ongoing study in the Great Lakes research program and an evaluation of the ATSDR 1995 updated toxicological profile. Also, the agency continues to recognize the importance of collecting additional data on uniquely exposed populations at waste sites.
	28G	Potential candidate for subregistry of exposed persons.	ATSDR.		
PCBs	29A	Dose-response data in animals for acute- and intermediate-duration oral exposures.	G. Lakes	.....	Although an MRL for intermediate-exposure duration was derived in ATSDR's 2000 updated toxicological profile, an MRL for acute-exposure duration is still lacking.
	29B	Biodegradation of PCBs in water; bioavailability of PCBs in air, water, and soil.			
	29C	Dose-response data in animals for acute- and intermediate-duration inhalation exposures. The subchronic study should include extended reproductive organ histopathology.			

TABLE 1.—ATSDR'S SUBSTANCE-SPECIFIC PRIORITY DATA NEEDS FOR 50 PRIORITY HAZARDOUS SUBSTANCES—Continued

Substances	PDN ID [1]	PDN description	Program [2]	Status change [3]	Comments [4]
	29D	Epidemiologic studies on the health effects of PCBs (Special emphasis end points include immunotoxicity, gastrointestinal toxicity, liver toxicity, kidney toxicity, thyroid toxicity, and reproductive/developmental toxicity).	G. Lakes	Filled	Multiple new published studies in ATSDR's 2000 updated toxicological profile and at least nine ongoing studies in the Great Lakes research program are available.
	29E	Exposure levels in humans living near hazardous waste sites and other populations, such as exposed workers.	G. Lakes	Filled	Background levels data are available (ATSDR's 1997 updated toxicological profile, and Needham et al. 1996). Also, multiple studies that evaluated blood and breast milk PCB levels and potential adverse health effects are available (at least six ATSDR studies + at least eight ongoing studies in the Great Lakes research program).
	29F	Potential candidate for subregistry of exposed persons.	ATSDR.		
	29G [(5)]	Chronic toxicity and oncogenicity via oral exposure.	Vol Res ..	Filled	ATSDR accepted the final report of the GE in October 1997.
	29H [(5)]	Aerobic PCB biodegradation in sediment.	Vol Res ..	Filled	ATSDR accepted the final report of the GE study in July 1999.
	29I [(5)]	PCB congener analysis	Vol Res .. G. Lakes	Filled	ATSDR accepted the final report of the GE study in October 1997. Also, ongoing studies in the Great Lakes research program are available.
Selenium	30A	Dose-response data in animals for acute-duration oral exposure.	EPA.		
	30B	Immunotoxicology battery of tests via oral exposure.	EPA.		
	30C	Epidemiologic studies on the health effects of selenium (Special emphasis end points include cancer, reproductive and developmental toxicity, hepatotoxicity, and adverse skin effects).	.....	Filled	Based on an evaluation of ATSDR's 2001 updated toxicological profile. ATSDR will continue to evaluate new data as they become available to determine if additional studies are needed.
	30D	Exposure levels in humans living near hazardous waste sites and other populations, such as exposed workers.	G. Lakes	Filled	Referent population serum selenium levels are known (NHANES III). Two ongoing studies in the Great Lakes research program are available. ATSDR acknowledges that reference concentration data can support exposure and health assessments at waste sites, but the agency also continues to recognize the importance of collecting additional data on uniquely exposed populations at waste sites.
	30E	Potential candidate for subregistry of exposed persons.	ATSDR.		
Tetrach loroethy lene	31A	Dose-response data in animals for acute-duration oral exposure, including neuropathology and demeanor, and immunopathology.	.....	Filled	An MRL was derived in the 1997 updated toxicological profile.

TABLE 1.—ATSDR'S SUBSTANCE-SPECIFIC PRIORITY DATA NEEDS FOR 50 PRIORITY HAZARDOUS SUBSTANCES—Continued

Substances	PDN ID [1]	PDN description	Program [2]	Status change [3]	Comments [4]
	31B	Multigeneration reproductive toxicity study via oral exposure.	Vol Res ..	.....	HSIA's inhalation study was accepted by ATSDR and included in ATSDR's 1997 updated toxicological profile. However, ATSDR has identified ingestion of contaminated environmental media to be the primary exposure route for this chemical at waste sites. HSIA plans to obtain the oral data from the inhalation study by conducting PBPK modeling.
	31C	Dose-response data in animals for intermediate-duration oral exposure, including neuropathology, and immunopathology.	EPA ..... Vol Res.	.....	HSIA intends to obtain oral data for neurotoxicity by PBPK modeling, and to conduct an immunotoxicity study.
	31D	One-species developmental toxicity study via oral exposure.	EPA ..... Vol Res.		
	31E	Developmental neurotoxicity study via oral exposure.	EPA ..... Vol Res.		
	31F	Exposure levels in humans living near hazardous waste sites and other populations, such as exposed workers.	.....	Filled	Reference range concentrations in blood are available (Ashley et al. 1992, 1994; Needham et al. 1995). ATSDR acknowledges that reference concentration data can support exposure and health assessments at waste sites, but the agency also continues to recognize the importance of collecting additional data on uniquely exposed populations at waste sites.
	31G	Potential candidate for subregistry of exposed persons.	ATSDR.		
Toluene	32A	Dose-response data in animals for acute- and intermediate-duration oral exposures. The subchronic study should include an extended histopathologic evaluation of the immune system.	EPA	Filled	Availability of MRLs for acute- and intermediate-exposure durations in ATSDR's 2000 updated toxicological profile. Immunotoxicity study remains in the ATSDR/EPA test rule under development.
	32B	Comparative toxicokinetic studies (Characterization of absorption, distribution, and excretion via oral exposure).	.....	Filled	Based on evaluation of the data in ATSDR's 2000 updated toxicological profile.
	32C	Neurotoxicology battery of tests via oral exposure.	EPA ..... MHPF.		
	32D	Mechanism of toluene-induced neurotoxicity.	.....	Filled	At least 15 studies in ATSDR's 1994 updated toxicological profile and additional new data in ATSDR's 2000 updated toxicological profile are available.
	32E	Exposure levels in humans living near hazardous waste sites and other populations, such as exposed worker.	.....	Filled	Reference range concentrations in blood are available (Ashley et al. 1992, 1994; Needham et al. 1995), and additional data in ATSDR's 2000 updated toxicological profile are available. ATSDR acknowledges that reference concentration data can support exposure and health assessments at waste sites, but the agency also continues to recognize the importance of collecting additional data on uniquely exposed populations at waste sites.
	32F	Potential candidate for subregistry of exposed persons.	ATSDR.		

TABLE 1.—ATSDR'S SUBSTANCE-SPECIFIC PRIORITY DATA NEEDS FOR 50 PRIORITY HAZARDOUS SUBSTANCES—Continued

Substances	PDN ID [1]	PDN description	Program [2]	Status change [3]	Comments [4]
Toxaphene	33A	Identify the long-term health consequences of exposure to environmental toxaphene via oral exposure..			
	33B	Conduct additional immunotoxicity studies for chronic-duration via oral route of exposure.			
	33C	Conduct additional neurotoxicity studies for chronic-duration via oral route of exposure.			
	33D	Exposure levels in humans living in areas near hazardous waste sites with toxaphene and in those individuals with the potential to ingest it.			
	33E	Potential candidate for subregistry of exposed persons..	ATSDR.		
Trichloroethylene	34A	Dose-response data in animals for acute-duration oral exposure.	.....	Filled	An MRL was derived in ATSDR's 1997 updated toxicological profile.
	34B	Dose-response data in animals for intermediate-duration oral exposure.	EPA ..... Vol Res.		
	34C	Neurotoxicology battery of tests via the oral route.	EPA ..... MHPF ..... Vol Res.		
	34D	Immunotoxicology battery of tests via the oral route.	EPA ..... Vol Res.		
	34E	One-species developmental toxicity study via oral exposure.	Vol Res ..	.....	ATSDR accepted HSIA's final report for an inhalation developmental toxicity study in September 2001. HSIA is currently using PBPK modeling to obtain data for oral exposure using the data from its inhalation study.
	34F	Developmental neurotoxicity study via oral exposure.	EPA ..... Vol Res.		
	34G	Epidemiologic studies on the health effects of trichloroethylene (Special emphasis end points include cancer, hepatotoxicity, renal toxicity, developmental toxicity, and neurotoxicity).	.....	Filled	Based on evaluation of the data in ATSDR's 1997 updated toxicological profile. ATSDR will continue to evaluate new data as they become available to determine if additional studies are needed.
	34H	Exposure levels in humans living near hazardous waste sites and other populations, such as exposed workers.	.....	Filled	Reference range concentrations in blood are available (Ashley et al. 1992, 1994; Needham et al. 1995). ATSDR acknowledges that reference concentration data can support exposure and health assessments at waste sites, but the agency also continues to recognize the importance of collecting additional data on uniquely exposed populations at waste sites.
Vinyl chloride	35A	Dose-response data in animals for acute-duration inhalation exposure.	.....	Filled	An MRL was derived in ATSDR's 1997 updated toxicological profile.
	35B	Multigeneration reproductive toxicity study via inhalation.	Vol Res ..	Filled	ATSDR accepted the final report of ACC's study in November 2000.
	35C	Dose-response data in animals for chronic-duration inhalation exposure.			
	35D	Mitigation of vinyl chloride-induced toxicity.			

TABLE 1.—ATSDR'S SUBSTANCE-SPECIFIC PRIORITY DATA NEEDS FOR 50 PRIORITY HAZARDOUS SUBSTANCES—Continued

Substances	PDN ID [1]	PDN description	Program [2]	Status change [3]	Comments [4]
	35E	Two-species developmental toxicity study via inhalation..	Vol Res ..	Filled	ATSDR accepted the final report of ACC's study in November 2000.
	35F	Exposure levels in humans living near hazardous waste sites and other populations, such as exposed workers.			
	35G	Potential candidate for subregistry of exposed persons.	ATSDR.		
Zinc	36A	Dose-response data in animals for acute- and intermediate-duration oral exposures. The subchronic study should include an extended histopathologic evaluation of the immunologic and neurologic systems.	MHPF	Filled	Ongoing studies in the MHPF research program are available.
	36B	Multigeneration reproductive toxicity study via oral exposure.	MHPF.		
	36C	Carcinogenicity testing (2-year bioassay) via oral exposure.			
	36D	Exposure levels in humans living near hazardous waste sites and other populations, such as exposed workers.	.....	.....	This priority data need, previously anticipated to be addressed under the voluntary research program, is not being investigated under any of the ATSDR research programs.
	36E	Potential candidate for subregistry of exposed persons.	ATSDR.		

[1] Priority data need identification number.

[2] Programs addressing data needs. ATSDR=ATSDR's Division of Health Studies; EPA=Environmental Protection Agency; G. Lakes=Great Lakes Human Health Effects Research Program; MHPF=Minority Health Professions Foundation schools; NTP=National Toxicology Program; Vol Res=Voluntary research.

[3] PDN can be filled or remain unchanged based on reevaluation of the database using criteria developed by ATSDR.

[4] ACC=American Chemistry Council; Ashley et al. 1992=Ashley DL, Bonin MA, Cardinali FL, et al. Anal Chem (1992) 64:1021–29; Ashley et al. 1994=Ashley DL, Bonin MA, Cardinali FL et al., Clin Chem (1994) 40/7:1401–4; ATSDR studies=Studies conducted by ATSDR's Division of Health Studies; GE=General Electric Company ; HSIA=Halogenated Solvents Industry Alliance, Inc.; MHPF=Minority Health Professions Foundation schools; MRL=Minimal Risk Level; Needham et al. 1995=Needham LL, Hill RH Jr, Ashley DL, Pirkle JL, and Sampson EJ. Environ Health Perspect 103 (Suppl 3):89–94; Needham et al. 1996=Needham LL, Patterson DG Jr, Burse VW, Paschal DC, Turner WE, and Hill VW Jr. Toxicol Ind Health 12:507–513; NHANES III=The Third National Health and Nutrition Examination Survey, conducted by the National Center for Health Statistics, Centers for Disease Control and Prevention, Atlanta, GA; NTP=National Toxicology Program; Paschal et al. 1998=Paschal DC, Ting BC, Morrow JC, et al. Environ Res, Section A 76: 53–59; PBPK modeling=physiologically based pharmacokinetic modeling; Toxicological profile=ATSDR's toxicological profiles for the agency's priority hazardous substances.

[5] Not a priority data need.

TABLE 2.—GROUPS ADDRESSING ATSDR'S SUBSTANCE-SPECIFIC PRIORITY DATA NEEDS (PDNS)

ATSDR program	Firm, institution, agency, or consortium	Substance	PDN ID
Voluntarism	American Chemistry Council	Vinyl Chloride	35B, 35E
	General Electric Company	PCBs	29G,* 29H,* 29I*
	Halogenated Solvents Industry Alliance, Inc.	Methylene chloride	26A, 26B
		Tetrachloroethylene	31B, 31C, 31D, 31E
		Trichloroethylene	34B, 34C, 34D, 34E, 34F
Minority Health Professions Foundation Schools.	Florida A & M University	Lead	22A
	The King/Drew Medical Center of the Charles R. Drew University of Medicine and Science.	Lead	22B, 22C
	Meharry Medical College	PAHS	28A, 28B, 28C, 28D
	Morehouse School of Medicine	Lead	22C
	Texas Southern University	Di-n-butyl phthalate	15D
		Lead	22A
		Toluene	32C
		Trichloroethylene	34C

TABLE 2.—GROUPS ADDRESSING ATSDR'S SUBSTANCE-SPECIFIC PRIORITY DATA NEEDS (PDNS)—Continued

ATSDR program	Firm, institution, agency, or consortium	Substance	PDN ID
	Tuskegee University	Chlordane	7A
		Mercury	24A
		Zinc	36A, 36B
	Xavier University	Manganese	23A, 23B
		Zinc	36A
Great Lakes Human Health Effects Research Program.	Michigan State University	DDT/DDE	13D, 13E
		Lead	22C
		Mercury	24D
		PCBs	29D, 29E, 29I
		Selenium	30D
	New York State Health Department.	DDT/DDE	13E
		Lead	22C
		Mercury	24D
		PCBs	29D, 29E, 29I
	State University of New York at Buffalo.	DDT/DDE	13D, 13E
		Lead	22C
		Mercury	24D
		PCBs	29D, 29E, 291
	State University of New York at Oswego.	DDT/DDE	13D, 13E
		Lead	22C
		Mercury	24D
		PCBs	29D, 29E, 29I
	University of Illinois at Chicago	DDT/DDE	13D, 13E
		Lead	22C
		Mercury	24D
		PCBs	29D, 29E, 291
	University of Illinois at Urbana-Champaign.	DDT/DDE	13D, 13E
		Lead	22C
		Mercury	24D
		PCBs	29D, 29E, 29I
	University of Wisconsin—Milwaukee.	DDT/DDE	13D, 13E
		Lead	22C
		Mercury	24D
		PCBs	29A, 29D, 29E, 29I
		Selenium	30D
	Wisconsin Department of Health and Social Services—5 State Consortium.	Arsenic	2D
		Cadmium	5B
		Chromium	10E
		DDT/DDE	13D, 13E
		Lead	22C
		Mercury	24D
		Nickel	27F
		PAHs	28F
		PCBs	29D, 29E, 29I
Environmental Protection Agency TSCA/FIFRA.	ATSDR Test Rule	Benzene	3A, 3B, 3C
		Chloroethane	8A, 8B
		Cyanide (hydrogen cyanide and sodium cyanide).	11A, 11B
		Methylene chloride	26A, 26B
		Tetrachloroethylene	31C, 31D, 31E
		Toluene	32A, 32C
		Trichloroethylene	34B, 34C, 34D, 34F
	Metals Testing Task Force (TASARC).	Arsenic	2A, 2B, 2C
		Beryllium	4A, 4B, 4C, 4E
		Chromium	10A, 10B, 10C, 10D
		Manganese	23A, 23B, 23E
		Mercury	24B, 24C
		Nickel	27B, 27C, 27D, 27E
		Selenium	30A, 30B
National Toxicology Program	National Institute of Environmental Health Sciences.	Carbon Tetrachloride	6B
		Chlordane	7A
		Di-n-butyl phthalate	15A
		Endrin	18B
		Heptachlor	19B

*Not priority data needs.

[FR Doc. 02–2421 Filed 1–30–02; 8:45 am]

BILLING CODE 4163–70–P

Federal Register

Thursday,
January 31, 2002

Part V

Department of Transportation

Federal Aviation Administration

14 CFR Part 25

Revisions to Various Powerplant Installation Requirements for Transport Category Airplanes; Proposed Rule

DEPARTMENT OF TRANSPORTATION

Federal Aviation Administration

14 CFR Part 25

[Docket No. FAA–2002–11272; Notice No. 02–02]

RIN 2120–AH37

Revisions to Various Powerplant Installation Requirements for Transport Category Airplanes

AGENCY: Federal Aviation Administration (FAA), DOT.

ACTION: Notice of proposed rulemaking.

SUMMARY: The Federal Aviation Administration proposes to amend the airworthiness standards for transport category airplanes concerning powerplant installations. Specifically, the proposed rule would affect the standards applicable to thrust or power augmentation systems; fuel filling points; designated fire zones; and powerplant instruments. Adopting this proposal would eliminate regulatory differences between the airworthiness standards of the U.S. and the Joint Aviation Requirements of Europe, without affecting current industry design practices.

DATES: Send your comments on or before April 1, 2002.

ADDRESSES: Address your comments to Dockets Management System, U.S. Department of Transportation Dockets, Room Plaza 401, 400 Seventh Street SW., Washington, DC 20590–0001. You must identify the docket number FAA–2002–11272 at the beginning of your comments, and you should submit two copies of your comments. If you wish to receive confirmation that the FAA has received your comments, please include a self-addressed, stamped postcard on which the following statement is made: ''Comments to Docket No. FAA–2002–11272.'' We will date-stamp the postcard and mail it back to you.

You also may submit comments electronically to the following Internet address: *http://dms.dot.gov.*

You may review the public docket containing comments to this proposed regulation at the Department of Transportation (DOT) Dockets Office, located on the plaza level of the Nassif Building at the above address. You may review the public docket in person at that address between 9:00 a.m. and 5:00 p.m., Monday through Friday, except Federal holidays. Also, you may review the public dockets on the Internet at *http://dms.dot.gov.*

FOR FURTHER INFORMATION CONTACT: Michael McRae, Propulsion/and Mechanical Systems Branch, ANM–112, Transport Airplane Directorate, Aircraft Certification Service, FAA, 1601 Lind Avenue SW., Renton, WA 98055–4056; telephone (425) 227–2133; fax (425) 227–1320, *e-mail mike.mcrae@faa.gov.*

SUPPLEMENTARY INFORMATION:

How Do I Submit Comments to This NPRM?

Interested persons are invited to participate in the making of the proposed action by submitting such written data, views, or arguments, as they may desire. Comments relating to the environmental, energy, federalism, or economic impact that might result from adopting the proposals in this document are also invited. Substantive comments should be accompanied by cost estimates. Comments must identify the regulatory docket number and be submitted in duplicate to the DOT Rules Docket address specified above.

All comments received, as well as a report summarizing each substantive public contact with FAA personnel concerning this proposed rulemaking, will be filed in the docket. The docket is available for public inspection before and after the comment closing date.

We will consider all comments received on or before the closing date before taking action on this proposed rulemaking. Comments filed late will be considered as far as possible without incurring expense or delay. The proposals in this document may be changed in light of the comments received.

How Can I Obtain a Copy of This NPRM?

You may download an electronic copy of this document using a modem and suitable communications software from the FAA regulations section of the Fedworld electronic bulletin board service (telephone: 703–321–3339); the Government Printing Office (GPO)'s electronic bulletin board service (telephone: 202–512–1661); or, if applicable, the FAA's Aviation Rulemaking Advisory Committee bulletin board service (telephone: 800–322–2722 or 202–267–5948).

Internet users may access recently published rulemaking documents at the FAA's web page at *http://www.faa.gov/avr/arm/nprm/nprm.htm* or the *GPO's* web page at *http://www.access.gpo.gov/nara.*

You may obtain a copy of this document by submitting a request to the Federal Aviation Administration, Office of Rulemaking, ARM–1, 800 Independence Avenue, SW., Washington, DC 20591; or by calling 202–267–9680. Communications must identify the docket number of this NPRM.

What Are the Relevant Airworthiness Standards in the United States?

In the United States, the airworthiness standards for type certification of transport category airplanes are contained in Title 14, Code of Federal Regulations (CFR) part 25. Manufacturers of transport category airplanes must show that each airplane they produce of a different type design complies with the appropriate part 25 standards. These standards apply to:

- Airplanes manufactured within the U.S. for use by U.S.-registered operators, and
- Airplanes manufactured in other countries and imported to the U.S. under a bilateral airworthiness agreement.

What Are the Relevant Airworthiness Standards in Europe?

In Europe, the airworthiness standards for type certification of transport category airplanes are contained in Joint Aviation Requirements (JAR)–25, which are based on part 25. These were developed by the Joint Aviation Authorities (JAA) of Europe to provide a common set of airworthiness standards within the European aviation community. Twenty-three European countries accept airplanes type certificated to the JAR–25 standards, including airplanes manufactured in the U.S. that are type certificated to JAR–25 standards for export to Europe.

What Is ''Harmonization'' and How Did It Start?

Although part 25 and JAR–25 are very similar, they are not identical in every respect. When airplanes are type certificated to both sets of standards, the differences between part 25 and JAR–25 can result in substantial additional costs to manufacturers and operators. These additional costs, however, frequently do not bring about an increase in safety. In many cases, part 25 and JAR–25 may contain different requirements to accomplish the same safety intent. Consequently, manufacturers are usually burdened with meeting the requirements of both sets of standards, although the level of safety is not increased correspondingly.

Recognizing that a common set of standards would not only benefit the aviation industry economically, but also maintain the necessary high level of safety, the FAA and the JAA began an effort in 1988 to ''harmonize'' their respective aviation standards. The goal

of the harmonization effort is to ensure that:

- Where possible, standards do not require domestic and foreign parties to manufacture or operate to different standards for each country involved; and
- The standards adopted are mutually acceptable to the FAA and the foreign aviation authorities.

The FAA and JAA have identified a number of significant regulatory differences (SRD) between the wording of part 25 and JAR–25. Both the FAA and the JAA consider ''harmonization'' of the two sets of standards a high priority.

What Is ARAC and What Role Does It Play in Harmonization?

After initiating the first steps towards harmonization, the FAA and JAA soon realized that traditional methods of rulemaking and accommodating different administrative procedures was neither sufficient nor adequate to make appreciable progress towards fulfilling the goal of harmonization. The FAA then identified the Aviation Rulemaking Advisory Committee (ARAC) as an ideal vehicle for assisting in resolving harmonization issues, and, in 1992, the FAA tasked ARAC to undertake the entire harmonization effort.

The FAA had formally established ARAC in 1991 (56 FR 2190, January 22, 1991), to provide advice and recommendations concerning the full range of the FAA's safety-related rulemaking activity. The FAA sought this advice to develop better rules in less overall time and using fewer FAA resources than previously needed. The committee provides the FAA firsthand information and insight from interested parties regarding potential new rules or revisions of existing rules.

There are 64 member organizations on the committee, representing a wide range of interests within the aviation community. Meetings of the committee are open to the public, except as authorized by section 10(d) of the Federal Advisory Committee Act.

The ARAC establishes working groups to develop recommendations for resolving specific airworthiness issues. Tasks assigned to working groups are published in the **Federal Register**. Although working group meetings are not generally open to the public, the FAA solicits participation in working groups from interested members of the public who possess knowledge or experience in the task areas. Working groups report directly to the ARAC, and the ARAC must accept a working group proposal before ARAC presents the proposal to the FAA as an advisory committee recommendation.

The activities of the ARAC will not, however, circumvent the public rulemaking procedures; nor is the FAA limited to the rule language ''recommended'' by ARAC. If the FAA accepts an ARAC recommendation, the agency proceeds with the normal public rulemaking procedures. Any ARAC participation in a rulemaking package is fully disclosed in the public docket.

What Is the Status of the Harmonization Effort Today?

Despite the work that ARAC has undertaken to address harmonization, there remain a large number of regulatory differences between part 25 and JAR–25. The current harmonization process is extremely costly and time-consuming for industry, the FAA, and the JAA. Industry has expressed a strong desire to conclude the harmonization program as quickly as possible to alleviate the drain on their resources and to finally establish one acceptable set of standards.

Recently, representatives of the aviation industry [including Aerospace Industries Association of America, Inc. (AIA), General Aviation Manufacturers Association (GAMA), and European Association of Aerospace Industries (AECMA)] proposed an accelerated process to reach harmonization.

What Is the ''Fast Track Harmonization Program''?

In light of a general agreement among the affected industries and authorities to expedite the harmonization program, the FAA and JAA in March 1999 agreed upon a method to achieve these goals. This method, which the FAA has titled ''The Fast Track Harmonization Program,'' is aimed at expediting the rulemaking process for harmonizing not only the 42 standards that are currently tasked to ARAC for harmonization, but approximately 80 additional standards for part 25 airplanes.

The FAA initiated the Fast Track program on November 26, 1999 (64 FR 66522). This program involves grouping all of the standards needing harmonization into three categories:

Category 1: Envelope—For these standards, parallel part 25 and JAR–25 standards would be compared, and harmonization would be reached by accepting the more stringent of the two standards. Thus, the more stringent requirement of one standard would be ''enveloped'' into the other standard. In some cases, it may be necessary to incorporate parts of both the part 25 and JAR standard to achieve the final, more stringent standard. (This may necessitate that each authority revises its current standard to incorporate more stringent provisions of the other.)

Category 2: Completed or near complete—For these standards, ARAC has reached, or has nearly reached, technical agreement or consensus on the new wording of the proposed harmonized standards.

Category 3: Harmonize—For these standards, ARAC is not near technical agreement on harmonization, and the parallel part 25 and JAR–25 standards cannot be ''enveloped'' (as described under Category 1) for reasons of safety or unacceptability. A standard developed under Category 3 would be mutually acceptable to the FAA and JAA, with a consistent means of compliance.

Further details on the Fast Track Program can be found in the tasking statement (64 FR 66522, November 26, 1999) and the first NPRM published under this program, Fire Protection Requirements for Powerplant Installations on Transport Category Airplanes (65 FR 36978, June 12, 2000).

Under this program, the FAA provides ARAC with an opportunity to review, discuss, and comment on the FAA's draft NPRM. In the case of this rulemaking, however, ARAC did not request the opportunity to review the draft prior to publication.

Discussion of the Proposal

How Does This Proposed Regulation Relate to ''Fast Track''?

This proposed regulation results from the recommendations of ARAC submitted under the FAA's Fast Track Harmonization Program. In this notice, the FAA proposes to amend four sections of 14 CFR part 25, specifically:

Change #	Section No.	Section title
1	§ 25.945(b)(5)	Thrust or power augmentation system.
2	§ 25.973(d)	Fuel tank filler connection.
3	§ 25.1181(b)	Designated fire zones; regions included.

Change #	Section No.	Section title
4	§ 25.1305(a)(7) and (d)(2).	Powerplant instruments.

We have identified this proposed rulemaking project as a Category 1 project under the criteria of the Fast Track Harmonization Program. Each of the proposed changes would adopt the ''more stringent'' requirements of the parallel JAR.

How Is This Preamble Organized?

Each of the four proposed changes to the standards is discussed separately below. Although the reader may find much of the information repetitious, we consider it important that the public be provided the full explanation and reasoning behind each of the four proposed changes.

Change 1: § 25.945, Thrust or Power Augmentation System

What Is the Underlying Safety Issue Addressed by the Current Standards?

Currently, JAR 25.945 contains a paragraph, which requires that:

- each augmentation system fluid tank must have an expansion space of not less than 2% of the tank capacity, and
- it must be impossible to fill the expansion space inadvertently while the airplane is in the normal ground attitude.

These requirements are intended to prevent the inadvertent discharge overboard of thrust or power augmentation fluids.

The parallel part 25 section does not contain this standard. However, the requirements of JAR 25.945(b)(5) are equivalent to those of § 25.969 (''Fuel tank expansion space'') and § 25.1013(b)(2) (''Oil tanks''), which address preventing the inadvertent discharge overboard of fuel and engine oil, respectively. (The JAR contains these same sections.) Both of those sections of part 25 require that there be a 2% expansion space in the tank to accommodate the likely volumetric expansion of the fluid when the airplane is exposed to hot day conditions, after the fluids are initially replenished in cold conditions.

The current requirements of both part 25 and JAR–25 do not specify the location of any augmentation fluid tank vent outlets, so it is not possible to be certain that adverse effects will not occur if fluid is discharged. However, depending on the type of augmentation fluid used, the adverse effects could include fire, corrosion, and freezing of controls or equipment. The 2% expansion space ensures that the risk of discharge of commonly-used augmentation fluids (typically water, or a mix of water and methanol) is unlikely to occur during typical operation of the airplane within its normal operating temperature envelope.

What Are the Current 14 CFR and JAR Standards?

There currently is no paragraph (b)(5) of § 25.945 in 14 CFR.

The current text of JAR 25.945(b)(5) (Change 15, amendment 25/ 96/1) is:

JAR 25.945 Thrust or power augmentation system

* * * * *

(b) Fluid tanks. Each augmentation system fluid tank must meet the following requirements:

* * *

(5) Each tank must have an expansion space of not less than 2% of the tank capacity. It must be impossible to fill the expansion space inadvertently with the aeroplane in the normal ground attitude.

What Are the Differences in the Standards and What Do Those Differences Result In?

As explained above, the requirements of JAR 25.945(b)(5) for the 2% expansion space ensure that the risk of discharge of commonly-used augmentation fluids is unlikely to occur during typical operation of the airplane under typical operating temperatures. Because JAR–25 contains this specific requirement in section 25.945, but part 25 does not, the JAR is considered ''more stringent.'' However, although there is no equivalent standard specifically in § 25.945, the requirement is basically covered separately under other sections of part 25.

What, if Any, Are the Differences in the Means of Compliance?

Currently, U.S. manufacturers must comply with the ''more stringent'' requirements of JAR 25.945(b)(5) if they intend to sell their airplanes in Europe. Future certificated airplanes also are expected to meet the existing JAR requirements. In actual practice, however, U.S. manufacturers and other applicants already are meeting the ''more stringent'' JAR requirements by complying with §§ 25.969 and § 25.1013(b)(2).

Further, compliance with the JAR 25.945(b)(5) requirement rarely involves much additional design or manufacturing resources; in principle, it should be fairly simple to meet the design requirement of a tank that is 2% larger. Augmentation fluid tanks are small in comparison to fuel tanks and it is unlikely that design constraints would be encountered.

What Is the Proposed Action?

We propose to amend § 25.945 by incorporating the ''more stringent'' requirements of the JAR in a new paragraph (b)(5). The new paragraph would be identical (with some minor editorial differences) to the existing JAR 25.945(b)(5).

How Does This Proposed Standard Address the Underlying Safety Issue?

The proposed standard would continue to address the original underlying safety issue. The new § 25.945(b)(5) would control the identified adverse effects in the same way as the current JAR–25 requirement.

What Is the Effect of the Proposed Standard Relative to the Current Regulations?

The proposed standard would maintain, and may increase, the level of safety currently provided by part 25.

What Is the Effect of the Proposed Standard Relative to Current Industry Practice?

Industry practice has been based upon the existing JAR–25 requirement. Currently, U.S. manufacturers are either already complying, or fully intend to comply, with the more stringent JAR requirements in order to sell their airplanes in Europe. Future certificated airplanes also are expected to meet the existing JAR requirements, and this proposed rule would simply adopt those same requirements.

Change 2: § 25.973, Fuel Tank Filler Connection

What Is the Underlying Safety Issue Addressed by the Current Standards?

The current standards provide for a means by which the build-up of unwanted electrostatic charge can be prevented. Static charge can build up wherever fuel is flowing (during refueling, for example), and precautions are needed to dissipate that charge. Failure to do so could result in adverse effects such as uncontrolled sparking and arcing.

What Are the Current 14 CFR and JAR Standards?

The current text of 14 CFR 25.973(d) [amendment 25–72 (55 FR 29785, July 20, 1990)] is:

Section 25.973 Fuel tank filler connection.

Each fuel tank filler connection must prevent the entrance of fuel into any part of the airplane other than the tank itself. In addition—

* * * * *

(d) *Each fuel filling point, except pressure fueling connection points, must have a provision for electrically bonding the airplane to ground fueling equipment.*

The current text of JAR 25.973(d) (Change 15, amendment 25/ 96/1) is:

JAR 25.973 Fuel tank filler connection

Each fuel tank filler connection must prevent the entrance of fuel into any part of the aeroplane other than the tank itself. In addition-

* * * * *

(d) Each fuel filling point must have a provision for electrically bonding the aeroplane to ground fueling equipment.

What Are the Differences in the Standards and What Do Those Differences Result In?

Currently, § 25.973(d) requires that each fuel filling point—except the pressure fueling connection points—must have a provision for electrically bonding the airplane to ground fueling equipment. We have traditionally assumed that, whenever pressure refueling equipment is used, there is always a metallic connection between the aircraft fueling receptacle and the end of the refueling hose; this creates the electrical bonding that the standard requires. Thus, we included the exception in this section because pressure fueling connection points are considered to inherently provide adequate bonding.

The parallel JAR 25.973(d) does not make such an exception; it requires all fuel filling points to have a provision for electrically bonding the airplane to ground fueling equipment. On airplanes with pressure refueling connection points, this requirement can be met if the aircraft refueling receptacle is bonded to the airframe.

Because the JAR standard does not provide for an exception, it can be considered ''more stringent.'' In actuality, however, both standards ensure that the pressure fueling connection points provide adequate bonding.

What, if Any, Are the Differences in the Means of Compliance?

In current practice, both the part 25 and the JAR standards have been applied to require bonding of pressure refueling connections. As stated previously, although the FAA standard includes the exception, we have applied the standard assuming that pressure fueling connection points naturally provide adequate bonding because there is always a metallic connection between the aircraft fueling receptacle and the end of the refueling hose.

What Is the Proposed Action?

We propose to adopt the ''more stringent'' requirements of the JAR by deleting the words ''except pressure fueling connection points'' from § 25.973(d). The requirements of the amended section would pertain to all fuel filling points. This change would make the part 25 and JAR–25 standards identical.

How Does This Proposed Standard Address the Underlying Safety Issue?

The proposed standard would continue to address the original underlying safety issue. The new § 25.973(d) would control the identified adverse effects in the same way as the current JAR 25.973(d) requirement.

What Is the Effect of the Proposed Standard Relative to the Current Regulations?

The proposed standard would maintain, and may increase, the level of safety currently provided by part 25.

What Is the Effect of the Proposed Standard Relative to Current Industry Practice?

Industry practice has been based upon the existing JAR–25 requirement. Currently, U.S. manufacturers are either already complying, or fully intend to comply, with the ''more stringent'' JAR requirements in order to sell their airplanes in Europe. Future certificated airplanes also are expected to meet the existing JAR requirements, and this proposed rule would simply adopt those same requirements.

Change 3: § 25.1181, Designated Fire Zones

What Is the Underlying Safety Issue Addressed by the Current Standards?

Section 25.1181 of both part 25 and JAR–25 defines which regions of the airplane are ''Designated Fire Zones.'' Paragraph (b) of that section defines a set of requirements that each Designated Fire Zone must meet so that the required level of powerplant fire protection can be achieved.

What Are the Current 14 CFR and JAR Standards?

The current text of 14 CFR 25.1181(b) [amendment 25–72, (55 FR 29785, July 20, 1990)] is:

Section 25.1181 Designated fire zones; regions included.

* * * * *

(*b*) *Each designated fire zone must meet the requirements of §§ 25.867 and 25.1185 through 25.1203.*

The current text of JAR 25.1181(b) (Change 15, amendment 25/96/1) is:

JAR 25.1181 Designated fire zones: regions included (*See ACJ 25.1181.*)

* * * * *

(b) Each designated fire zone must meet the requirements of JAR 25.867, 25.869, and 25.1185 to 25.1203.

What Are the Differences in the Standards and What Do Those Differences Result In?

The requirements of § 25.1181(b) and JAR 25.1181(b) are essentially identical: Both standards require that each designated fire zone must meet the requirements of sections 25.867 (''Fire protection: other components''), 25.1185 (''Flammable fluids''), and 25.1203 (''Fire detector system''). However, JAR 25.1181(b) contains an additional reference to 25.869 (''Fire protection: systems'').

Amendment 25–72 of part 25 introduced § 25.869 that, among other things, cross-referenced a number of Subpart E regulations related to systems situated in a Designated Fire Zone. However, there was no revision to any of the cross-referenced regulations in Subpart E (such as § 25.1181) to reference the new § 25.869.

When JAR–25 was revised at Change 14, it included the equivalent new JAR 25.869 requirement. In that action, JAR 25.1181(b) (in Subpart E) also was revised to add a reference to the new JAR 25.869.

What, if Any, Are the Differences in the Means of Compliance?

There are no differences in the means of compliance with the two parallel standards. The only differences in the standards are the cross-references each contains to other related standards. The cross-references in this section are meant only to draw the applicant's attention to the fact that there are some associated fire protection requirements to consider that are located elsewhere in the standards. Regardless of whether the cross-references are contained in § 25.1181, applicants will have to consider the requirements of the cross-referenced standards in any case when

designing powerplant fire protection systems.

What Is the Proposed Action?

Section 25.1181(b) would be revised by adding an additional reference to § 25.869. Besides achieving harmonization between the two sets of standards, this change to § 25.1181(b) will clarify to applicants showing compliance with the powerplant fire protection requirements of part 25, Subpart E, that there are some associated fire protection requirements in § 25.869.

In addition, we propose to add references to § 25.863 (''Flammable fluid fire protection'') and to § 25.865 (''Fire protection of flight controls, engine mounts, and other flight structure'') in § 25.1181(b). (The JAA plans to take similar action.) These additional references will document the applicability of these two sections to fire zone standards. (This action is related to a separate harmonization project concerning flammable fluid fire protection.)

There is no legal standard concerning the use of ''cross-references'' in regulations. Even though one regulation may not contain a cross-reference to a second pertinent regulation, affected applicants are still expected to comply with both regulations as appropriate. In the case of this proposed change, applicants already have to consider the requirements of §§ 25.863, 25.865, and 25.869 in any case when designing powerplant fire protection systems.

How Does This Proposed Standard Address the Underlying Safety Issue?

The proposed standard would continue to address the safety issue and to maintain the current level of safety. It also would provide a more complete cross-referencing to other related rules.

What Is the Effect of the Proposed Standard Relative to the Current Regulations?

The basic effect of the proposed changes to § 25.1181(b) is editorial—it merely provides a more complete cross-referencing of applicable standards. As stated previously, in actual practice, applicants already consider the requirements of all of the cross-referenced sections in any case when designing powerplant fire protection systems.

What Is the Effect of the Proposed Standard Relative to Current Industry Practice?

If the proposed standard is adopted, there would be no change to industry practice. However, the accurate cross-reference will enable applicants to clearly understand and comply with the standard.

Change 4: § 25.1305, Powerplant Instruments

What Is the Underlying Safety Issue Addressed by the Current Standards?

The current standards specify the need for a indication on the flight deck to alert the flightcrew as to engine fire conditions and the position of the thrust reverser.

What Are the Current 14 CFR and JAR Standards?

The current texts of 14 CFR 25.1305(a)(7) and (d)(2) [amendment 25–72 (55 FR 29785, July 20, 1990)] are:

Section 25.1305 Powerplant instruments.

The following are required powerplant instruments:

(a) For all airplanes.

* * *

(7) Fire-warning indicators.

* * * * *

(d) For turbojet engine powered airplanes. In addition to the powerplant instruments required by paragraphs (a) and (c) of this section, the following powerplant instruments are required:

* * *

(2) A position indicating means to indicate to the flightcrew when the thrust reversing device is in the reverse thrust position, for each engine using a thrust reversing device.

* * * * *

The current texts of JAR 25.1305(a)(7) and (d)(2) (Change 15, amendment 25/96/1) are:

JAR 25.1305 Powerplant instruments

The following are required powerplant instruments:

(a) For all aeroplanes

* * *

(7) Fire-warning devices that provide visual and audible warning.

* * * * *

(d) For turbo-jet engine-powered aeroplanes. In addition to the powerplant instruments required by sub-paragraphs (a) and (c) of this paragraph, the following powerplant instruments are required:

* * *

(2) A means to indicate to the flight crew when the thrust reversing device—

(i) Is not in the selected position, and

(ii) Is in the reverse thrust position, for each engine using a thrust reversing device.

What Are the Differences in the Standards and What Do Those Differences Result In?

Both the FAA and JAA identify the need for positive annunciation directing the flightcrew's attention both to engine fire conditions and to thrust reverser positioning. However, the part 25 and JAR–25 requirements for such annunciation, as presented in § 25.1305, differ as follows:

1. *Paragraph (a)(7):* This requirement specifies the need for a flight deck warning of engine fire conditions.

- *The part 25 standard* requires ''[engine] fire warning indicators'' (which implies a visual means), but does not specifically require an audible warning.
- *The JAR–25 standard* specifies that the engine fire warning devices must provide both a visual *and* an audible warning. A warning that has both visual and audible aspects can be assumed to have enhanced ''attention getting'' capability.

2. *Paragraph (d)(2):* This requirement specifies the need for a flight deck indication of the position of the thrust reverser.

- *Both the part 25 and JAR–25 standards* require an indication of when the thrust reverser is deployed.
- *The JAR–25 standard* also requires an indication of when the thrust reverser is not in its selected position (for example, when the reverser has been commanded to deploy, but remains stowed).

In both paragraph (a)(7) and (d)(2), the JAR standard is considered the ''more stringent'' because it requires additional means to address the safety issue.

What, if Any, Are the Differences in the Means of Compliance?

Complying with the JAR standard requires that applicants design flight deck systems with means to provide additional indications to the flightcrew. Currently, U.S. manufacturers must comply with these ''more stringent'' JAR requirements if they intend to sell their airplanes in Europe. Future certificated airplanes also are expected to meet the existing JAR requirements.

What Is the Proposed Action?

We recognize the higher level of safety provided by the JAR regulations and propose to revise § 25.1305 to adopt the more stringent requirements of JAR 25.1305(a)(7) and (d)(2).

How Does This Proposed Standard Address the Underlying Safety Issue?

The proposed standard would continue to address the safety issue by ensuring that the flightcrew would be provided with additional indications to enhance their awareness of the condition of the engines and thrust reversers.

What Is the Effect of the Proposed Standard Relative to the Current Regulations?

The proposed standard would maintain, and may increase, the level of safety currently provided by part 25.

What Is the Effect of the Proposed Standard Relative to Current Industry Practice?

Industry practice has been based upon the existing JAR–25 requirement. Currently, U.S. manufacturers must comply with the ''more stringent'' requirements of JAR 25.1305 if they intend to sell their airplanes in Europe. Future certificated airplanes also are expected to meet the existing JAR requirements, and this proposed rule would simply adopt those same requirements.

General Information About the Proposal

What Other Options Have Been Considered and Why Were They Not Selected?

We considered two alternatives to this proposal:

1. *No change to the existing standards.* We did not select this option because it would mean that the standards would continue to be ''unharmonized'' and manufacturers would have to continue to meet two different sets of standards when certificating their airplanes.

2. *The JAA could unilaterally adopt the standards of part 25.* We did not seriously consider this option because, where the part 25 standards are ''less stringent,'' this could potentially mean adopting a lower level of safety.

We consider the proposal, as contained in this notice, to be the most appropriate method to:

- Ensure that the highest level of safety is achieved, and
- Fulfill the objectives of harmonizing the U.S. and European standards.

Who Would Be Affected by the Proposed Changes?

Applicants for new, amended, or supplemental type certificates (which typically include manufacturers and modifiers) who have not previously applied for JAA certification would potentially be affected by the proposed amendment. However, as stated throughout this preamble, the aviation industry is either already complying, or fully intends to comply, with the more stringent standards as a means of obtaining joint FAA/JAA certification. Industry practice has been based upon the existing JAR–25 requirement and it is anticipated that there will be minimal impact to the industry if the proposed changes are adopted.

Is Existing FAA Advisory Material Adequate?

We do not consider that advisory material is necessary for any of the changes proposed.

What Regulatory Analyses and Assessments Has the FAA Conducted?

Regulatory Evaluation Summary

Proposed changes to Federal regulations must undergo several economic analyses. First, Executive Order 12866 directs that each Federal agency shall propose or adopt a regulation only upon a reasoned determination that the benefits of the intended regulation justify its costs. Second, the Regulatory Flexibility Act of 1980 requires agencies to analyze the economic effect of regulatory changes on small entities. Third, the Trade Agreements Act (19 U.S.C. section 2531–2533) prohibits agencies from setting standards that create unnecessary obstacles to the foreign commerce of the United States. In developing U.S. standards, this Trade Act also requires the consideration of international standards and, where appropriate, that they be the basis of U.S. standards. And fourth, the Unfunded Mandates Reform Act of 1995 requires agencies to prepare a written assessment of the costs, benefits, and other effects of proposed or final rules that include a Federal mandate likely to result in the expenditure by State, local, or tribal governments, in the aggregate, or by the private sector of $100 million or more annually (adjusted for inflation).

The FAA has determined that this proposal has no substantial costs, and that it is not ''a significant regulatory action'' as defined in Executive Order 12866, nor ''significant'' as defined in DOT's Regulatory Policies and Procedures. Further, this proposed rule would not have a significant economic impact on a substantial number of small entities, would reduce barriers to international trade, and would not impose an Unfunded Mandate on state, local, or tribal governments, or on the private sector.

The DOT Order 2100.5 prescribes policies and procedures for simplification, analysis, and review of regulations. If it is determined that the expected impact is so minimal that the proposed rule does not warrant a full evaluation, a statement to that effect and the basis for it is included in the proposed regulation. Accordingly, the FAA has determined that the expected impact of this proposed rule is so minimal that the proposed rule does not warrant a full evaluation. The FAA provides the basis for this minimal impact determination as follows:

Currently, airplane manufacturers must satisfy both part 25 and the European JAR–25 standards to certificate transport category aircraft in both the United States and Europe. Meeting two sets of certification requirements raises the cost of developing a new transport category airplane often with no increase in safety. In the interest of fostering international trade, lowering the cost of aircraft development, and making the certification process more efficient, the FAA, JAA, and aircraft manufacturers have been working to create, to the maximum possible extent, a single set of certification requirements accepted in both the United States and Europe. As explained in detail previously, these efforts are referred to as ''harmonization.''

This proposal would revise §§ 25.945, 25.973, 25.1181 and 25.1305 of 14 CFR to incorporate the ''more stringent'' requirements currently in those same sections of JAR–25. This proposed rule results from the FAA's acceptance of recommendations made by ARAC. We have concluded that, for the reasons previously discussed in the preamble, the adoption of the proposed requirements in 14 CFR part 25 is the most efficient way to harmonize these sections and in so doing, the existing level of safety will be preserved.

There was consensus within the ARAC members, comprised of representatives of the affected industry, that the requirements of the proposed rule will not impose additional costs on U.S. manufacturers of part 25 airplanes. We have reviewed the cost analysis provided by industry through the ARAC process. A copy is available through the public docket. Based on this analysis, we consider that a full regulatory evaluation is not necessary.

We invite comments with supporting documentation regarding the regulatory evaluation statements based on ARAC's proposal.

Initial Regulatory Flexibility Determination

The Regulatory Flexibility Act (RFA) of 1980, 50 U.S.C. 601–612, as amended, establishes ''as a principle of regulatory issuance that agencies shall endeavor, consistent with the objective of the rule and of applicable statutes, to fit regulatory and informational requirements to the scale of the business, organizations, and

governmental jurisdictions subject to regulation.'' To achieve that principle, the RFA requires agencies to solicit and consider flexible regulatory proposals and to explain the rationale for their actions.

Agencies must perform a review to determine whether a proposed or final rule will have a significant impact on a substantial number of small entities. If the determination is that the rule will, the Agency must prepare a regulatory flexibility analysis as described in the RFA.

However, if an agency determines that a proposed or final rule is not expected to have a significant economic impact on a substantial number of small entities, section 605(b) of the RFA provides that the head of the agency may so certify and a regulatory flexibility analysis is not required. The certification must include a statement providing the factual basis for this determination, and the reasoning should be clear.

The FAA considers that this proposed rule would not have a significant impact on a substantial number of small entities for two reasons:

First, the net effect of the proposed rule is minimum regulatory cost relief. The proposed rule would require that new transport category aircraft manufacturers meet just one certification requirement, rather than different standards for the United States and Europe. Airplane manufacturers already meet or expect to meet this standard as well as the existing 14 CFR part 25 requirement.

Second, all U.S. transport-aircraft category manufacturers exceed the Small Business Administration small-entity criteria of 1,500 employees for aircraft manufacturers. The current U.S. part 25 airplane manufacturers include: Boeing, Cessna Aircraft, Gulfstream Aerospace, Learjet (owned by Bombardier), Lockheed Martin, McDonnell Douglas (a wholly-owned subsidiary of The Boeing Company), Raytheon Aircraft, and Sabreliner Corporation.

Given that this proposed rule is minimally cost-relieving and that there are no small entity manufacturers of part 25 airplanes, the FAA certifies that this proposed rule would not have a significant impact on a substantial number of small entities.

International Trade Impact Assessment

The Trade Agreement Act of 1979 prohibits Federal agencies from engaging in any standards or related activities that create unnecessary obstacles to the foreign commerce of the United States. Legitimate domestic objectives, such as safety, are not considered unnecessary obstacles. The statute also requires consideration of international standards and, where appropriate, that they be the basis for U.S. standards. In addition, consistent with the Administration's belief in the general superiority and desirability of free trade, it is the policy of the Administration to remove or diminish to the extent feasible, barriers to international trade, including both barriers affecting the export of American goods and services to foreign countries and barriers affecting the import of foreign goods and services into the United States.

In accordance with the above statute and policy, the FAA has assessed the potential effect of the proposed rule and has determined that it supports the Administration's free trade policy because this rule would use European international standards as the basis for U.S. standards.

Unfunded Mandates Reform Act

Title II of the Unfunded Mandates Reform Act of 1995 (the Act), codified in 2 U.S.C. 1532–1538, enacted as Public Law 104–4 on March 22, 1995, requires each Federal agency, to the extent permitted by law, to prepare a written assessment of the effects of any Federal mandate in a proposed or final agency rule that may result in the expenditure by State, local, and tribal governments, in the aggregate, or by the private sector, of $100 million or more (adjusted annually for inflation) in any one year.

This proposed rule does not contain a Federal intergovernmental or private sector mandate that exceeds $100 million in any year; therefore, the requirements of the Act do not apply.

What Other Assessments Has the FAA Conducted?

Executive Order 13132, Federalism

The FAA has analyzed this proposed rule and the principles and criteria of Executive Order 13132, Federalism. We have determined that this action would not have a substantial direct effect on the States, on the relationship between the national Government and the States, or on the distribution of power and responsibilities among the various levels of government. Therefore, we have determined that this notice of proposed rulemaking would not have federalism implications.

Paperwork Reduction Act

The Paperwork Reduction Act of 1995 (44 U.S.C. 3507(d)) requires that the FAA consider the impact of paperwork and other information collection burdens imposed on the public. We have determined that there are no new information collection requirements associated with this proposed rule.

International Compatibility

In keeping with U.S. obligations under the Convention on International Civil Aviation, it is FAA policy to comply with International Civil Aviation Organization (ICAO) Standards and Recommended Practices to the maximum extent practicable. The FAA determined that there are no ICAO Standards and Recommended Practices that correspond to this proposed regulation.

Environmental Analysis

FAA Order 1050.1D defines FAA actions that may be categorically excluded from preparation of a National Environmental Policy Act (NEPA) environmental impact statement. In accordance with FAA Order 1050.1D, appendix 4, paragraph 4(j), this proposed rulemaking action qualifies for a categorical exclusion.

Energy Impact

The energy impact of the proposed rule has been assessed in accordance with the Energy Policy and Conservation Act (EPCA) and Public Law 94–163, as amended (43 U.S.C. 6362), and FAA Order 1053.1. It has been determined that it is not a major regulatory action under the provisions of the EPCA.

Regulations Affecting Intrastate Aviation in Alaska

Section 1205 of the FAA Reauthorization Act of 1996 (110 Stat. 3213) requires the Administrator, when modifying regulations in Title 14 of the CFR in a manner affecting intrastate aviation in Alaska, to consider the extent to which Alaska is not served by transportation modes other than aviation, and to establish such regulatory distinctions as he or she considers appropriate. Because this proposed rule would apply to the certification of future designs of transport category airplanes and their subsequent operation, it could, if adopted, affect intrastate aviation in Alaska. We therefore specifically request comments on whether there is justification for applying the proposed rule differently to intrastate operations in Alaska.

Plain Language

In response to the June 1, 1998, Presidential memorandum regarding the issue of plain language, the FAA re-

examined the writing style currently used in the development of regulations. The memorandum requires Federal agencies to communicate clearly with the public. We are interested in your comments on whether the style of this document is clear, and in any other suggestions you might have to improve the clarity of FAA communications that affect you. You can get more information about the Presidential memorandum and the plain language initiative at *http://www.plainlanguage.gov.*

List of Subjects in 14 CFR Part 25

Aircraft, Aviation safety, Reporting and recordkeeping requirements.

The Proposed Amendment

In consideration of the foregoing, the Federal Aviation Administration proposes to amend part 25 of Title 14, Code of Federal Regulations, as follows:

PART 25—AIRWORTHINESS STANDARDS: TRANSPORT CATEGORY AIRPLANES

1. The authority citation for part 25 continues to read as follows:

Authority: 49 U.S.C. 106(g), 40113, 44701, 44702 and 44704.

2. Add a new paragraph (b)(5) to § 25.945 to read as follows:

§ 25.945 Thrust or power augmentation system.

* * * * *

(b) * * *

(5) Each tank must have an expansion space of not less than 2% of the tank capacity. It must be impossible to fill the expansion space inadvertently with the airplane in the normal ground attitude.

* * * * *

3. Republish the introductory text and revise paragraph (d) of § 25.973 to read as follows:

§ 25.973 Fuel tank filler connection.

Each fuel tank filler connection must prevent the entrance of fuel into any part of the airplane other than the tank itself. In addition—

* * * * *

(d) Each fuel filling point must have a provision for electrically bonding the airplane to ground fueling equipment.

4. Revise paragraph (b) of § 25.1181 to read as follows:

§ 25.1181 Designated fire zones; regions included.

* * * * *

(b) Each designated fire zone must meet the requirements of §§ 25.863, 25.865, 25.867, 25.869, and 25.1185 through 25.1203.

5. Republish the introductory text and revise paragraphs (a)(7) and (d)(2) of § 25.1305 to read as follows:

§ 25.1305 Powerplant instruments

The following are required powerplant instruments:

(a) * * *

(7) Fire-warning devices that provide visual and audible warning.

* * * * *

(d) * * *

(2) A position indicating means to indicate to the flight crew when the thrust reversing device—

(i) Is not in the selected position, and

(ii) Is in the reverse thrust position, for each engine using a thrust reversing device.

* * * * *

Issued in Renton, Washington, on December 18, 2001.

Vi Lipski,

Manager, Transport Airplane Directorate, Aircraft Certification Service.

[FR Doc. 02–1002 Filed 1–30–02; 8:45 am]

BILLING CODE 4910–13–U

Federal Register

Thursday,
January 31, 2002

Part V

Department of Transportation

Federal Aviation Administration

14 CFR Part 25

Revisions to Various Powerplant Installation Requirements for Transport Category Airplanes; Proposed Rule

DEPARTMENT OF TRANSPORTATION

Federal Aviation Administration

14 CFR Part 25

[Docket No. FAA–2002–11272; Notice No. 02–02]

RIN 2120–AH37

Revisions to Various Powerplant Installation Requirements for Transport Category Airplanes

AGENCY: Federal Aviation Administration (FAA), DOT.

ACTION: Notice of proposed rulemaking.

SUMMARY: The Federal Aviation Administration proposes to amend the airworthiness standards for transport category airplanes concerning powerplant installations. Specifically, the proposed rule would affect the standards applicable to thrust or power augmentation systems; fuel filling points; designated fire zones; and powerplant instruments. Adopting this proposal would eliminate regulatory differences between the airworthiness standards of the U.S. and the Joint Aviation Requirements of Europe, without affecting current industry design practices.

DATES: Send your comments on or before April 1, 2002.

ADDRESSES: Address your comments to Dockets Management System, U.S. Department of Transportation Dockets, Room Plaza 401, 400 Seventh Street SW., Washington, DC 20590–0001. You must identify the docket number FAA–2002–11272 at the beginning of your comments, and you should submit two copies of your comments. If you wish to receive confirmation that the FAA has received your comments, please include a self-addressed, stamped postcard on which the following statement is made: ''Comments to Docket No. FAA–2002–11272.'' We will date-stamp the postcard and mail it back to you.

You also may submit comments electronically to the following Internet address: *http://dms.dot.gov.*

You may review the public docket containing comments to this proposed regulation at the Department of Transportation (DOT) Dockets Office, located on the plaza level of the Nassif Building at the above address. You may review the public docket in person at that address between 9:00 a.m. and 5:00 p.m., Monday through Friday, except Federal holidays. Also, you may review the public dockets on the Internet at *http://dms.dot.gov.*

FOR FURTHER INFORMATION CONTACT: Michael McRae, Propulsion/and Mechanical Systems Branch, ANM–112, Transport Airplane Directorate, Aircraft Certification Service, FAA, 1601 Lind Avenue SW., Renton, WA 98055–4056; telephone (425) 227–2133; fax (425) 227–1320, *e-mail mike.mcrae@faa.gov.*

SUPPLEMENTARY INFORMATION:

How Do I Submit Comments to This NPRM?

Interested persons are invited to participate in the making of the proposed action by submitting such written data, views, or arguments, as they may desire. Comments relating to the environmental, energy, federalism, or economic impact that might result from adopting the proposals in this document are also invited. Substantive comments should be accompanied by cost estimates. Comments must identify the regulatory docket number and be submitted in duplicate to the DOT Rules Docket address specified above.

All comments received, as well as a report summarizing each substantive public contact with FAA personnel concerning this proposed rulemaking, will be filed in the docket. The docket is available for public inspection before and after the comment closing date.

We will consider all comments received on or before the closing date before taking action on this proposed rulemaking. Comments filed late will be considered as far as possible without incurring expense or delay. The proposals in this document may be changed in light of the comments received.

How Can I Obtain a Copy of This NPRM?

You may download an electronic copy of this document using a modem and suitable communications software from the FAA regulations section of the Fedworld electronic bulletin board service (telephone: 703–321–3339); the Government Printing Office (GPO)'s electronic bulletin board service (telephone: 202–512–1661); or, if applicable, the FAA's Aviation Rulemaking Advisory Committee bulletin board service (telephone: 800–322–2722 or 202–267–5948).

Internet users may access recently published rulemaking documents at the FAA's web page at *http://www.faa.gov/avr/arm/nprm/nprm.htm* or the *GPO's* web page at *http://www.access.gpo.gov/nara.*

You may obtain a copy of this document by submitting a request to the Federal Aviation Administration, Office of Rulemaking, ARM–1, 800 Independence Avenue, SW., Washington, DC 20591; or by calling 202–267–9680. Communications must identify the docket number of this NPRM.

What Are the Relevant Airworthiness Standards in the United States?

In the United States, the airworthiness standards for type certification of transport category airplanes are contained in Title 14, Code of Federal Regulations (CFR) part 25. Manufacturers of transport category airplanes must show that each airplane they produce of a different type design complies with the appropriate part 25 standards. These standards apply to:

- Airplanes manufactured within the U.S. for use by U.S.-registered operators, and
- Airplanes manufactured in other countries and imported to the U.S. under a bilateral airworthiness agreement.

What Are the Relevant Airworthiness Standards in Europe?

In Europe, the airworthiness standards for type certification of transport category airplanes are contained in Joint Aviation Requirements (JAR)–25, which are based on part 25. These were developed by the Joint Aviation Authorities (JAA) of Europe to provide a common set of airworthiness standards within the European aviation community. Twenty-three European countries accept airplanes type certificated to the JAR–25 standards, including airplanes manufactured in the U.S. that are type certificated to JAR–25 standards for export to Europe.

What Is ''Harmonization'' and How Did It Start?

Although part 25 and JAR–25 are very similar, they are not identical in every respect. When airplanes are type certificated to both sets of standards, the differences between part 25 and JAR–25 can result in substantial additional costs to manufacturers and operators. These additional costs, however, frequently do not bring about an increase in safety. In many cases, part 25 and JAR–25 may contain different requirements to accomplish the same safety intent. Consequently, manufacturers are usually burdened with meeting the requirements of both sets of standards, although the level of safety is not increased correspondingly.

Recognizing that a common set of standards would not only benefit the aviation industry economically, but also maintain the necessary high level of safety, the FAA and the JAA began an effort in 1988 to ''harmonize'' their respective aviation standards. The goal

of the harmonization effort is to ensure that:

- Where possible, standards do not require domestic and foreign parties to manufacture or operate to different standards for each country involved; and
- The standards adopted are mutually acceptable to the FAA and the foreign aviation authorities.

The FAA and JAA have identified a number of significant regulatory differences (SRD) between the wording of part 25 and JAR–25. Both the FAA and the JAA consider ''harmonization'' of the two sets of standards a high priority.

What Is ARAC and What Role Does It Play in Harmonization?

After initiating the first steps towards harmonization, the FAA and JAA soon realized that traditional methods of rulemaking and accommodating different administrative procedures was neither sufficient nor adequate to make appreciable progress towards fulfilling the goal of harmonization. The FAA then identified the Aviation Rulemaking Advisory Committee (ARAC) as an ideal vehicle for assisting in resolving harmonization issues, and, in 1992, the FAA tasked ARAC to undertake the entire harmonization effort.

The FAA had formally established ARAC in 1991 (56 FR 2190, January 22, 1991), to provide advice and recommendations concerning the full range of the FAA's safety-related rulemaking activity. The FAA sought this advice to develop better rules in less overall time and using fewer FAA resources than previously needed. The committee provides the FAA firsthand information and insight from interested parties regarding potential new rules or revisions of existing rules.

There are 64 member organizations on the committee, representing a wide range of interests within the aviation community. Meetings of the committee are open to the public, except as authorized by section 10(d) of the Federal Advisory Committee Act.

The ARAC establishes working groups to develop recommendations for resolving specific airworthiness issues. Tasks assigned to working groups are published in the **Federal Register**. Although working group meetings are not generally open to the public, the FAA solicits participation in working groups from interested members of the public who possess knowledge or experience in the task areas. Working groups report directly to the ARAC, and the ARAC must accept a working group proposal before ARAC presents the proposal to the FAA as an advisory committee recommendation.

The activities of the ARAC will not, however, circumvent the public rulemaking procedures; nor is the FAA limited to the rule language ''recommended'' by ARAC. If the FAA accepts an ARAC recommendation, the agency proceeds with the normal public rulemaking procedures. Any ARAC participation in a rulemaking package is fully disclosed in the public docket.

What Is the Status of the Harmonization Effort Today?

Despite the work that ARAC has undertaken to address harmonization, there remain a large number of regulatory differences between part 25 and JAR–25. The current harmonization process is extremely costly and time-consuming for industry, the FAA, and the JAA. Industry has expressed a strong desire to conclude the harmonization program as quickly as possible to alleviate the drain on their resources and to finally establish one acceptable set of standards.

Recently, representatives of the aviation industry [including Aerospace Industries Association of America, Inc. (AIA), General Aviation Manufacturers Association (GAMA), and European Association of Aerospace Industries (AECMA)] proposed an accelerated process to reach harmonization.

What Is the ''Fast Track Harmonization Program''?

In light of a general agreement among the affected industries and authorities to expedite the harmonization program, the FAA and JAA in March 1999 agreed upon a method to achieve these goals. This method, which the FAA has titled ''The Fast Track Harmonization Program,'' is aimed at expediting the rulemaking process for harmonizing not only the 42 standards that are currently tasked to ARAC for harmonization, but approximately 80 additional standards for part 25 airplanes.

The FAA initiated the Fast Track program on November 26, 1999 (64 FR 66522). This program involves grouping all of the standards needing harmonization into three categories:

Category 1: Envelope—For these standards, parallel part 25 and JAR–25 standards would be compared, and harmonization would be reached by accepting the more stringent of the two standards. Thus, the more stringent requirement of one standard would be ''enveloped'' into the other standard. In some cases, it may be necessary to incorporate parts of both the part 25 and JAR standard to achieve the final, more stringent standard. (This may necessitate that each authority revises its current standard to incorporate more stringent provisions of the other.)

Category 2: Completed or near complete—For these standards, ARAC has reached, or has nearly reached, technical agreement or consensus on the new wording of the proposed harmonized standards.

Category 3: Harmonize—For these standards, ARAC is not near technical agreement on harmonization, and the parallel part 25 and JAR–25 standards cannot be ''enveloped'' (as described under Category 1) for reasons of safety or unacceptability. A standard developed under Category 3 would be mutually acceptable to the FAA and JAA, with a consistent means of compliance.

Further details on the Fast Track Program can be found in the tasking statement (64 FR 66522, November 26, 1999) and the first NPRM published under this program, Fire Protection Requirements for Powerplant Installations on Transport Category Airplanes (65 FR 36978, June 12, 2000).

Under this program, the FAA provides ARAC with an opportunity to review, discuss, and comment on the FAA's draft NPRM. In the case of this rulemaking, however, ARAC did not request the opportunity to review the draft prior to publication.

Discussion of the Proposal

How Does This Proposed Regulation Relate to ''Fast Track''?

This proposed regulation results from the recommendations of ARAC submitted under the FAA's Fast Track Harmonization Program. In this notice, the FAA proposes to amend four sections of 14 CFR part 25, specifically:

Change #	Section No.	Section title
1	§ 25.945(b)(5)	Thrust or power augmentation system.
2	§ 25.973(d)	Fuel tank filler connection.
3	§ 25.1181(b)	Designated fire zones; regions included.

Change #	Section No.	Section title
4	§ 25.1305(a)(7) and (d)(2).	Powerplant instruments.

We have identified this proposed rulemaking project as a Category 1 project under the criteria of the Fast Track Harmonization Program. Each of the proposed changes would adopt the ''more stringent'' requirements of the parallel JAR.

How Is This Preamble Organized?

Each of the four proposed changes to the standards is discussed separately below. Although the reader may find much of the information repetitious, we consider it important that the public be provided the full explanation and reasoning behind each of the four proposed changes.

Change 1: § 25.945, Thrust or Power Augmentation System

What Is the Underlying Safety Issue Addressed by the Current Standards?

Currently, JAR 25.945 contains a paragraph, which requires that:

- each augmentation system fluid tank must have an expansion space of not less than 2% of the tank capacity, and
- it must be impossible to fill the expansion space inadvertently while the airplane is in the normal ground attitude.

These requirements are intended to prevent the inadvertent discharge overboard of thrust or power augmentation fluids.

The parallel part 25 section does not contain this standard. However, the requirements of JAR 25.945(b)(5) are equivalent to those of § 25.969 (''Fuel tank expansion space'') and § 25.1013(b)(2) (''Oil tanks''), which address preventing the inadvertent discharge overboard of fuel and engine oil, respectively. (The JAR contains these same sections.) Both of those sections of part 25 require that there be a 2% expansion space in the tank to accommodate the likely volumetric expansion of the fluid when the airplane is exposed to hot day conditions, after the fluids are initially replenished in cold conditions.

The current requirements of both part 25 and JAR–25 do not specify the location of any augmentation fluid tank vent outlets, so it is not possible to be certain that adverse effects will not occur if fluid is discharged. However, depending on the type of augmentation fluid used, the adverse effects could include fire, corrosion, and freezing of controls or equipment. The 2% expansion space ensures that the risk of discharge of commonly-used augmentation fluids (typically water, or a mix of water and methanol) is unlikely to occur during typical operation of the airplane within its normal operating temperature envelope.

What Are the Current 14 CFR and JAR Standards?

There currently is no paragraph (b)(5) of § 25.945 in 14 CFR.

The current text of JAR 25.945(b)(5) (Change 15, amendment 25/ 96/1) is:

JAR 25.945 Thrust or power augmentation system

* * * * *

(b) Fluid tanks. Each augmentation system fluid tank must meet the following requirements:

* * *

(5) Each tank must have an expansion space of not less than 2% of the tank capacity. It must be impossible to fill the expansion space inadvertently with the aeroplane in the normal ground attitude.

What Are the Differences in the Standards and What Do Those Differences Result In?

As explained above, the requirements of JAR 25.945(b)(5) for the 2% expansion space ensure that the risk of discharge of commonly-used augmentation fluids is unlikely to occur during typical operation of the airplane under typical operating temperatures. Because JAR–25 contains this specific requirement in section 25.945, but part 25 does not, the JAR is considered ''more stringent.'' However, although there is no equivalent standard specifically in § 25.945, the requirement is basically covered separately under other sections of part 25.

What, if Any, Are the Differences in the Means of Compliance?

Currently, U.S. manufacturers must comply with the ''more stringent'' requirements of JAR 25.945(b)(5) if they intend to sell their airplanes in Europe. Future certificated airplanes also are expected to meet the existing JAR requirements. In actual practice, however, U.S. manufacturers and other applicants already are meeting the ''more stringent'' JAR requirements by complying with §§ 25.969 and § 25.1013(b)(2).

Further, compliance with the JAR 25.945(b)(5) requirement rarely involves much additional design or manufacturing resources; in principle, it should be fairly simple to meet the design requirement of a tank that is 2% larger. Augmentation fluid tanks are small in comparison to fuel tanks and it is unlikely that design constraints would be encountered.

What Is the Proposed Action?

We propose to amend § 25.945 by incorporating the ''more stringent'' requirements of the JAR in a new paragraph (b)(5). The new paragraph would be identical (with some minor editorial differences) to the existing JAR 25.945(b)(5).

How Does This Proposed Standard Address the Underlying Safety Issue?

The proposed standard would continue to address the original underlying safety issue. The new § 25.945(b)(5) would control the identified adverse effects in the same way as the current JAR–25 requirement.

What Is the Effect of the Proposed Standard Relative to the Current Regulations?

The proposed standard would maintain, and may increase, the level of safety currently provided by part 25.

What Is the Effect of the Proposed Standard Relative to Current Industry Practice?

Industry practice has been based upon the existing JAR–25 requirement. Currently, U.S. manufacturers are either already complying, or fully intend to comply, with the more stringent JAR requirements in order to sell their airplanes in Europe. Future certificated airplanes also are expected to meet the existing JAR requirements, and this proposed rule would simply adopt those same requirements.

Change 2: § 25.973, Fuel Tank Filler Connection

What Is the Underlying Safety Issue Addressed by the Current Standards?

The current standards provide for a means by which the build-up of unwanted electrostatic charge can be prevented. Static charge can build up wherever fuel is flowing (during refueling, for example), and precautions are needed to dissipate that charge. Failure to do so could result in adverse effects such as uncontrolled sparking and arcing.

What Are the Current 14 CFR and JAR Standards?

The current text of 14 CFR 25.973(d) [amendment 25–72 (55 FR 29785, July 20, 1990)] is:

Section 25.973 Fuel tank filler connection.

Each fuel tank filler connection must prevent the entrance of fuel into any part of the airplane other than the tank itself. In addition—

* * * * *

(d) *Each fuel filling point, except pressure fueling connection points, must have a provision for electrically bonding the airplane to ground fueling equipment.*

The current text of JAR 25.973(d) (Change 15, amendment 25/ 96/1) is:

JAR 25.973 Fuel tank filler connection

Each fuel tank filler connection must prevent the entrance of fuel into any part of the aeroplane other than the tank itself. In addition-

* * * * *

(d) Each fuel filling point must have a provision for electrically bonding the aeroplane to ground fueling equipment.

What Are the Differences in the Standards and What Do Those Differences Result In?

Currently, § 25.973(d) requires that each fuel filling point—except the pressure fueling connection points—must have a provision for electrically bonding the airplane to ground fueling equipment. We have traditionally assumed that, whenever pressure refueling equipment is used, there is always a metallic connection between the aircraft fueling receptacle and the end of the refueling hose; this creates the electrical bonding that the standard requires. Thus, we included the exception in this section because pressure fueling connection points are considered to inherently provide adequate bonding.

The parallel JAR 25.973(d) does not make such an exception; it requires all fuel filling points to have a provision for electrically bonding the airplane to ground fueling equipment. On airplanes with pressure refueling connection points, this requirement can be met if the aircraft refueling receptacle is bonded to the airframe.

Because the JAR standard does not provide for an exception, it can be considered ''more stringent.'' In actuality, however, both standards ensure that the pressure fueling connection points provide adequate bonding.

What, if Any, Are the Differences in the Means of Compliance?

In current practice, both the part 25 and the JAR standards have been applied to require bonding of pressure refueling connections. As stated previously, although the FAA standard includes the exception, we have applied the standard assuming that pressure fueling connection points naturally provide adequate bonding because there is always a metallic connection between the aircraft fueling receptacle and the end of the refueling hose.

What Is the Proposed Action?

We propose to adopt the ''more stringent'' requirements of the JAR by deleting the words ''except pressure fueling connection points'' from § 25.973(d). The requirements of the amended section would pertain to all fuel filling points. This change would make the part 25 and JAR–25 standards identical.

How Does This Proposed Standard Address the Underlying Safety Issue?

The proposed standard would continue to address the original underlying safety issue. The new § 25.973(d) would control the identified adverse effects in the same way as the current JAR 25.973(d) requirement.

What Is the Effect of the Proposed Standard Relative to the Current Regulations?

The proposed standard would maintain, and may increase, the level of safety currently provided by part 25.

What Is the Effect of the Proposed Standard Relative to Current Industry Practice?

Industry practice has been based upon the existing JAR–25 requirement. Currently, U.S. manufacturers are either already complying, or fully intend to comply, with the ''more stringent'' JAR requirements in order to sell their airplanes in Europe. Future certificated airplanes also are expected to meet the existing JAR requirements, and this proposed rule would simply adopt those same requirements.

Change 3: § 25.1181, Designated Fire Zones

What Is the Underlying Safety Issue Addressed by the Current Standards?

Section 25.1181 of both part 25 and JAR–25 defines which regions of the airplane are ''Designated Fire Zones.'' Paragraph (b) of that section defines a set of requirements that each Designated Fire Zone must meet so that the required level of powerplant fire protection can be achieved.

What Are the Current 14 CFR and JAR Standards?

The current text of 14 CFR 25.1181(b) [amendment 25–72, (55 FR 29785, July 20, 1990)] is:

Section 25.1181 Designated fire zones; regions included.

* * * * *

(*b*) *Each designated fire zone must meet the requirements of §§ 25.867 and 25.1185 through 25.1203.*

The current text of JAR 25.1181(b) (Change 15, amendment 25/96/1) is:

JAR 25.1181 Designated fire zones: regions included (*See ACJ 25.1181.*)

* * * * *

(b) Each designated fire zone must meet the requirements of JAR 25.867, 25.869, and 25.1185 to 25.1203.

What Are the Differences in the Standards and What Do Those Differences Result In?

The requirements of § 25.1181(b) and JAR 25.1181(b) are essentially identical: Both standards require that each designated fire zone must meet the requirements of sections 25.867 (''Fire protection: other components''), 25.1185 (''Flammable fluids''), and 25.1203 (''Fire detector system''). However, JAR 25.1181(b) contains an additional reference to 25.869 (''Fire protection: systems'').

Amendment 25–72 of part 25 introduced § 25.869 that, among other things, cross-referenced a number of Subpart E regulations related to systems situated in a Designated Fire Zone. However, there was no revision to any of the cross-referenced regulations in Subpart E (such as § 25.1181) to reference the new § 25.869.

When JAR–25 was revised at Change 14, it included the equivalent new JAR 25.869 requirement. In that action, JAR 25.1181(b) (in Subpart E) also was revised to add a reference to the new JAR 25.869.

What, if Any, Are the Differences in the Means of Compliance?

There are no differences in the means of compliance with the two parallel standards. The only differences in the standards are the cross-references each contains to other related standards. The cross-references in this section are meant only to draw the applicant's attention to the fact that there are some associated fire protection requirements to consider that are located elsewhere in the standards. Regardless of whether the cross-references are contained in § 25.1181, applicants will have to consider the requirements of the cross-referenced standards in any case when

designing powerplant fire protection systems.

What Is the Proposed Action?

Section 25.1181(b) would be revised by adding an additional reference to § 25.869. Besides achieving harmonization between the two sets of standards, this change to § 25.1181(b) will clarify to applicants showing compliance with the powerplant fire protection requirements of part 25, Subpart E, that there are some associated fire protection requirements in § 25.869.

In addition, we propose to add references to § 25.863 (''Flammable fluid fire protection'') and to § 25.865 (''Fire protection of flight controls, engine mounts, and other flight structure'') in § 25.1181(b). (The JAA plans to take similar action.) These additional references will document the applicability of these two sections to fire zone standards. (This action is related to a separate harmonization project concerning flammable fluid fire protection.)

There is no legal standard concerning the use of ''cross-references'' in regulations. Even though one regulation may not contain a cross-reference to a second pertinent regulation, affected applicants are still expected to comply with both regulations as appropriate. In the case of this proposed change, applicants already have to consider the requirements of §§ 25.863, 25.865, and 25.869 in any case when designing powerplant fire protection systems.

How Does This Proposed Standard Address the Underlying Safety Issue?

The proposed standard would continue to address the safety issue and to maintain the current level of safety. It also would provide a more complete cross-referencing to other related rules.

What Is the Effect of the Proposed Standard Relative to the Current Regulations?

The basic effect of the proposed changes to § 25.1181(b) is editorial—it merely provides a more complete cross-referencing of applicable standards. As stated previously, in actual practice, applicants already consider the requirements of all of the cross-referenced sections in any case when designing powerplant fire protection systems.

What Is the Effect of the Proposed Standard Relative to Current Industry Practice?

If the proposed standard is adopted, there would be no change to industry practice. However, the accurate cross-reference will enable applicants to clearly understand and comply with the standard.

Change 4: § 25.1305, Powerplant Instruments

What Is the Underlying Safety Issue Addressed by the Current Standards?

The current standards specify the need for a indication on the flight deck to alert the flightcrew as to engine fire conditions and the position of the thrust reverser.

What Are the Current 14 CFR and JAR Standards?

The current texts of 14 CFR 25.1305(a)(7) and (d)(2) [amendment 25–72 (55 FR 29785, July 20, 1990)] are:

Section 25.1305 Powerplant instruments.

The following are required powerplant instruments:

(a) For all airplanes.

* * *

(7) Fire-warning indicators.

* * * * *

(d) For turbojet engine powered airplanes. In addition to the powerplant instruments required by paragraphs (a) and (c) of this section, the following powerplant instruments are required:

* * *

(2) A position indicating means to indicate to the flightcrew when the thrust reversing device is in the reverse thrust position, for each engine using a thrust reversing device.

* * * * *

The current texts of JAR 25.1305(a)(7) and (d)(2) (Change 15, amendment 25/96/1) are:

JAR 25.1305 Powerplant instruments

The following are required powerplant instruments:

(a) For all aeroplanes

* * *

(7) Fire-warning devices that provide visual and audible warning.

* * * * *

(d) For turbo-jet engine-powered aeroplanes. In addition to the powerplant instruments required by sub-paragraphs (a) and (c) of this paragraph, the following powerplant instruments are required:

* * *

(2) A means to indicate to the flight crew when the thrust reversing device—

(i) Is not in the selected position, and

(ii) Is in the reverse thrust position, for each engine using a thrust reversing device.

What Are the Differences in the Standards and What Do Those Differences Result In?

Both the FAA and JAA identify the need for positive annunciation directing the flightcrew's attention both to engine fire conditions and to thrust reverser positioning. However, the part 25 and JAR–25 requirements for such annunciation, as presented in § 25.1305, differ as follows:

1. *Paragraph (a)(7):* This requirement specifies the need for a flight deck warning of engine fire conditions.

- *The part 25 standard* requires ''[engine] fire warning indicators'' (which implies a visual means), but does not specifically require an audible warning.
- *The JAR–25 standard* specifies that the engine fire warning devices must provide both a visual *and* an audible warning. A warning that has both visual and audible aspects can be assumed to have enhanced ''attention getting'' capability.

2. *Paragraph (d)(2):* This requirement specifies the need for a flight deck indication of the position of the thrust reverser.

- *Both the part 25 and JAR–25 standards* require an indication of when the thrust reverser is deployed.
- *The JAR–25 standard* also requires an indication of when the thrust reverser is not in its selected position (for example, when the reverser has been commanded to deploy, but remains stowed).

In both paragraph (a)(7) and (d)(2), the JAR standard is considered the ''more stringent'' because it requires additional means to address the safety issue.

What, if Any, Are the Differences in the Means of Compliance?

Complying with the JAR standard requires that applicants design flight deck systems with means to provide additional indications to the flightcrew. Currently, U.S. manufacturers must comply with these ''more stringent'' JAR requirements if they intend to sell their airplanes in Europe. Future certificated airplanes also are expected to meet the existing JAR requirements.

What Is the Proposed Action?

We recognize the higher level of safety provided by the JAR regulations and propose to revise § 25.1305 to adopt the more stringent requirements of JAR 25.1305(a)(7) and (d)(2).

How Does This Proposed Standard Address the Underlying Safety Issue?

The proposed standard would continue to address the safety issue by ensuring that the flightcrew would be provided with additional indications to enhance their awareness of the condition of the engines and thrust reversers.

What Is the Effect of the Proposed Standard Relative to the Current Regulations?

The proposed standard would maintain, and may increase, the level of safety currently provided by part 25.

What Is the Effect of the Proposed Standard Relative to Current Industry Practice?

Industry practice has been based upon the existing JAR–25 requirement. Currently, U.S. manufacturers must comply with the ''more stringent'' requirements of JAR 25.1305 if they intend to sell their airplanes in Europe. Future certificated airplanes also are expected to meet the existing JAR requirements, and this proposed rule would simply adopt those same requirements.

General Information About the Proposal

What Other Options Have Been Considered and Why Were They Not Selected?

We considered two alternatives to this proposal:

1. *No change to the existing standards.* We did not select this option because it would mean that the standards would continue to be ''unharmonized'' and manufacturers would have to continue to meet two different sets of standards when certificating their airplanes.

2. *The JAA could unilaterally adopt the standards of part 25.* We did not seriously consider this option because, where the part 25 standards are ''less stringent,'' this could potentially mean adopting a lower level of safety.

We consider the proposal, as contained in this notice, to be the most appropriate method to:

- Ensure that the highest level of safety is achieved, and
- Fulfill the objectives of harmonizing the U.S. and European standards.

Who Would Be Affected by the Proposed Changes?

Applicants for new, amended, or supplemental type certificates (which typically include manufacturers and modifiers) who have not previously applied for JAA certification would potentially be affected by the proposed amendment. However, as stated throughout this preamble, the aviation industry is either already complying, or fully intends to comply, with the more stringent standards as a means of obtaining joint FAA/JAA certification. Industry practice has been based upon the existing JAR–25 requirement and it is anticipated that there will be minimal impact to the industry if the proposed changes are adopted.

Is Existing FAA Advisory Material Adequate?

We do not consider that advisory material is necessary for any of the changes proposed.

What Regulatory Analyses and Assessments Has the FAA Conducted?

Regulatory Evaluation Summary

Proposed changes to Federal regulations must undergo several economic analyses. First, Executive Order 12866 directs that each Federal agency shall propose or adopt a regulation only upon a reasoned determination that the benefits of the intended regulation justify its costs. Second, the Regulatory Flexibility Act of 1980 requires agencies to analyze the economic effect of regulatory changes on small entities. Third, the Trade Agreements Act (19 U.S.C. section 2531–2533) prohibits agencies from setting standards that create unnecessary obstacles to the foreign commerce of the United States. In developing U.S. standards, this Trade Act also requires the consideration of international standards and, where appropriate, that they be the basis of U.S. standards. And fourth, the Unfunded Mandates Reform Act of 1995 requires agencies to prepare a written assessment of the costs, benefits, and other effects of proposed or final rules that include a Federal mandate likely to result in the expenditure by State, local, or tribal governments, in the aggregate, or by the private sector of $100 million or more annually (adjusted for inflation).

The FAA has determined that this proposal has no substantial costs, and that it is not ''a significant regulatory action'' as defined in Executive Order 12866, nor ''significant'' as defined in DOT's Regulatory Policies and Procedures. Further, this proposed rule would not have a significant economic impact on a substantial number of small entities, would reduce barriers to international trade, and would not impose an Unfunded Mandate on state, local, or tribal governments, or on the private sector.

The DOT Order 2100.5 prescribes policies and procedures for simplification, analysis, and review of regulations. If it is determined that the expected impact is so minimal that the proposed rule does not warrant a full evaluation, a statement to that effect and the basis for it is included in the proposed regulation. Accordingly, the FAA has determined that the expected impact of this proposed rule is so minimal that the proposed rule does not warrant a full evaluation. The FAA provides the basis for this minimal impact determination as follows:

Currently, airplane manufacturers must satisfy both part 25 and the European JAR–25 standards to certificate transport category aircraft in both the United States and Europe. Meeting two sets of certification requirements raises the cost of developing a new transport category airplane often with no increase in safety. In the interest of fostering international trade, lowering the cost of aircraft development, and making the certification process more efficient, the FAA, JAA, and aircraft manufacturers have been working to create, to the maximum possible extent, a single set of certification requirements accepted in both the United States and Europe. As explained in detail previously, these efforts are referred to as ''harmonization.''

This proposal would revise §§ 25.945, 25.973, 25.1181 and 25.1305 of 14 CFR to incorporate the ''more stringent'' requirements currently in those same sections of JAR–25. This proposed rule results from the FAA's acceptance of recommendations made by ARAC. We have concluded that, for the reasons previously discussed in the preamble, the adoption of the proposed requirements in 14 CFR part 25 is the most efficient way to harmonize these sections and in so doing, the existing level of safety will be preserved.

There was consensus within the ARAC members, comprised of representatives of the affected industry, that the requirements of the proposed rule will not impose additional costs on U.S. manufacturers of part 25 airplanes. We have reviewed the cost analysis provided by industry through the ARAC process. A copy is available through the public docket. Based on this analysis, we consider that a full regulatory evaluation is not necessary.

We invite comments with supporting documentation regarding the regulatory evaluation statements based on ARAC's proposal.

Initial Regulatory Flexibility Determination

The Regulatory Flexibility Act (RFA) of 1980, 50 U.S.C. 601–612, as amended, establishes ''as a principle of regulatory issuance that agencies shall endeavor, consistent with the objective of the rule and of applicable statutes, to fit regulatory and informational requirements to the scale of the business, organizations, and

governmental jurisdictions subject to regulation.'' To achieve that principle, the RFA requires agencies to solicit and consider flexible regulatory proposals and to explain the rationale for their actions.

Agencies must perform a review to determine whether a proposed or final rule will have a significant impact on a substantial number of small entities. If the determination is that the rule will, the Agency must prepare a regulatory flexibility analysis as described in the RFA.

However, if an agency determines that a proposed or final rule is not expected to have a significant economic impact on a substantial number of small entities, section 605(b) of the RFA provides that the head of the agency may so certify and a regulatory flexibility analysis is not required. The certification must include a statement providing the factual basis for this determination, and the reasoning should be clear.

The FAA considers that this proposed rule would not have a significant impact on a substantial number of small entities for two reasons:

First, the net effect of the proposed rule is minimum regulatory cost relief. The proposed rule would require that new transport category aircraft manufacturers meet just one certification requirement, rather than different standards for the United States and Europe. Airplane manufacturers already meet or expect to meet this standard as well as the existing 14 CFR part 25 requirement.

Second, all U.S. transport-aircraft category manufacturers exceed the Small Business Administration small-entity criteria of 1,500 employees for aircraft manufacturers. The current U.S. part 25 airplane manufacturers include: Boeing, Cessna Aircraft, Gulfstream Aerospace, Learjet (owned by Bombardier), Lockheed Martin, McDonnell Douglas (a wholly-owned subsidiary of The Boeing Company), Raytheon Aircraft, and Sabreliner Corporation.

Given that this proposed rule is minimally cost-relieving and that there are no small entity manufacturers of part 25 airplanes, the FAA certifies that this proposed rule would not have a significant impact on a substantial number of small entities.

International Trade Impact Assessment

The Trade Agreement Act of 1979 prohibits Federal agencies from engaging in any standards or related activities that create unnecessary obstacles to the foreign commerce of the United States. Legitimate domestic objectives, such as safety, are not considered unnecessary obstacles. The statute also requires consideration of international standards and, where appropriate, that they be the basis for U.S. standards. In addition, consistent with the Administration's belief in the general superiority and desirability of free trade, it is the policy of the Administration to remove or diminish to the extent feasible, barriers to international trade, including both barriers affecting the export of American goods and services to foreign countries and barriers affecting the import of foreign goods and services into the United States.

In accordance with the above statute and policy, the FAA has assessed the potential effect of the proposed rule and has determined that it supports the Administration's free trade policy because this rule would use European international standards as the basis for U.S. standards.

Unfunded Mandates Reform Act

Title II of the Unfunded Mandates Reform Act of 1995 (the Act), codified in 2 U.S.C. 1532–1538, enacted as Public Law 104–4 on March 22, 1995, requires each Federal agency, to the extent permitted by law, to prepare a written assessment of the effects of any Federal mandate in a proposed or final agency rule that may result in the expenditure by State, local, and tribal governments, in the aggregate, or by the private sector, of $100 million or more (adjusted annually for inflation) in any one year.

This proposed rule does not contain a Federal intergovernmental or private sector mandate that exceeds $100 million in any year; therefore, the requirements of the Act do not apply.

What Other Assessments Has the FAA Conducted?

Executive Order 13132, Federalism

The FAA has analyzed this proposed rule and the principles and criteria of Executive Order 13132, Federalism. We have determined that this action would not have a substantial direct effect on the States, on the relationship between the national Government and the States, or on the distribution of power and responsibilities among the various levels of government. Therefore, we have determined that this notice of proposed rulemaking would not have federalism implications.

Paperwork Reduction Act

The Paperwork Reduction Act of 1995 (44 U.S.C. 3507(d)) requires that the FAA consider the impact of paperwork and other information collection burdens imposed on the public. We have determined that there are no new information collection requirements associated with this proposed rule.

International Compatibility

In keeping with U.S. obligations under the Convention on International Civil Aviation, it is FAA policy to comply with International Civil Aviation Organization (ICAO) Standards and Recommended Practices to the maximum extent practicable. The FAA determined that there are no ICAO Standards and Recommended Practices that correspond to this proposed regulation.

Environmental Analysis

FAA Order 1050.1D defines FAA actions that may be categorically excluded from preparation of a National Environmental Policy Act (NEPA) environmental impact statement. In accordance with FAA Order 1050.1D, appendix 4, paragraph 4(j), this proposed rulemaking action qualifies for a categorical exclusion.

Energy Impact

The energy impact of the proposed rule has been assessed in accordance with the Energy Policy and Conservation Act (EPCA) and Public Law 94–163, as amended (43 U.S.C. 6362), and FAA Order 1053.1. It has been determined that it is not a major regulatory action under the provisions of the EPCA.

Regulations Affecting Intrastate Aviation in Alaska

Section 1205 of the FAA Reauthorization Act of 1996 (110 Stat. 3213) requires the Administrator, when modifying regulations in Title 14 of the CFR in a manner affecting intrastate aviation in Alaska, to consider the extent to which Alaska is not served by transportation modes other than aviation, and to establish such regulatory distinctions as he or she considers appropriate. Because this proposed rule would apply to the certification of future designs of transport category airplanes and their subsequent operation, it could, if adopted, affect intrastate aviation in Alaska. We therefore specifically request comments on whether there is justification for applying the proposed rule differently to intrastate operations in Alaska.

Plain Language

In response to the June 1, 1998, Presidential memorandum regarding the issue of plain language, the FAA re-

examined the writing style currently used in the development of regulations. The memorandum requires Federal agencies to communicate clearly with the public. We are interested in your comments on whether the style of this document is clear, and in any other suggestions you might have to improve the clarity of FAA communications that affect you. You can get more information about the Presidential memorandum and the plain language initiative at *http://www.plainlanguage.gov.*

List of Subjects in 14 CFR Part 25

Aircraft, Aviation safety, Reporting and recordkeeping requirements.

The Proposed Amendment

In consideration of the foregoing, the Federal Aviation Administration proposes to amend part 25 of Title 14, Code of Federal Regulations, as follows:

PART 25—AIRWORTHINESS STANDARDS: TRANSPORT CATEGORY AIRPLANES

1. The authority citation for part 25 continues to read as follows:

Authority: 49 U.S.C. 106(g), 40113, 44701, 44702 and 44704.

2. Add a new paragraph (b)(5) to § 25.945 to read as follows:

§ 25.945 Thrust or power augmentation system.

* * * * *

(b) * * *

(5) Each tank must have an expansion space of not less than 2% of the tank capacity. It must be impossible to fill the expansion space inadvertently with the airplane in the normal ground attitude.

* * * * *

3. Republish the introductory text and revise paragraph (d) of § 25.973 to read as follows:

§ 25.973 Fuel tank filler connection.

Each fuel tank filler connection must prevent the entrance of fuel into any part of the airplane other than the tank itself. In addition—

* * * * *

(d) Each fuel filling point must have a provision for electrically bonding the airplane to ground fueling equipment.

4. Revise paragraph (b) of § 25.1181 to read as follows:

§ 25.1181 Designated fire zones; regions included.

* * * * *

(b) Each designated fire zone must meet the requirements of §§ 25.863, 25.865, 25.867, 25.869, and 25.1185 through 25.1203.

5. Republish the introductory text and revise paragraphs (a)(7) and (d)(2) of § 25.1305 to read as follows:

§ 25.1305 Powerplant instruments

The following are required powerplant instruments:

(a) * * *

(7) Fire-warning devices that provide visual and audible warning.

* * * * *

(d) * * *

(2) A position indicating means to indicate to the flight crew when the thrust reversing device—

(i) Is not in the selected position, and

(ii) Is in the reverse thrust position, for each engine using a thrust reversing device.

* * * * *

Issued in Renton, Washington, on December 18, 2001.

Vi Lipski,

Manager, Transport Airplane Directorate, Aircraft Certification Service.

[FR Doc. 02–1002 Filed 1–30–02; 8:45 am]

BILLING CODE 4910–13–U

Federal Register

Thursday,
January 31, 2002

Part VI

Department of Transportation

Transportation Security Administration

Reports, Forms and Record Keeping Requirements Agency Information Collection Activity Under OMB Review; Notice

DEPARTMENT OF TRANSPORTATION

Transportation Security Administration

[Docket No. TSA 2001–11120]

Reports, Forms and Record Keeping Requirements Agency Information Collection Activity Under OMB Review

AGENCY: Transportation Security Administration, DOT.

ACTION: Emergency **Federal Register** notice.

SUMMARY: The U.S. Department of Transportation, Transportation Security Administration, has submitted the following request for emergency processing of a public information collection to the Office of Management and Budget (OMB) for review and clearance under the Paperwork Reduction Act of 1995 (Pub. L. 104–13, 44 U.S.C. chapter 35.) This notice announces that the Information Collection Request (ICR) abstracted below has been forwarded to OMB for review and comment. The ICR describes the nature of the information collections and their expected burden.

Comments: Comments should be directed to the Office of Information and Regulatory Affairs, Office of Management and Budget, 725 Seventeenth Street, NW., Washington, DC 20503, Attention: Desk Officer for the Transportation Security Administration.

Type of Request: New.

Form Number: This proposed collection of information would not use any standard forms.

DATES: OMB approval has been requested by January 31, 2002.

FOR FURTHER INFORMATION CONTACT: Rita Maristch, Office of the General Counsel, Office of Environmental, Civil Rights, and General Law, Department of Transportation (C–10), 400 Seventh Street, SW., Room 10102, Washington, DC 20590, (202) 366–9161 (voice), (202) 366–9170 (fax). You may also contact Steven Cohen, Office of the General Counsel (C–10), at (202) 366–4684.

SUPPLEMENTARY INFORMATION:

Transportation Security Administration

Title: Imposition and Collection of Passenger Civil Aviation Security Service Fees.

OMB Control Number: None assigned.

Frequency: On December 31, 2001, the Transportation Security Administration published an interim final rule imposing a security service fee (September 11th Security Fee) on page 67698 of volume 66 of the **Federal Register**. Imposition of this fee begins February 1, 2002. Approximately 195 air carriers and foreign air carriers are expected to collect and remit the September 11th Security Fee. Each of these carriers would then be responsible for (1) establishing and maintaining an accounting system to account for the September 11th Security Fees that are imposed, collected, refunded and remitted and (2) reporting this information to the Transportation Security Administration, U.S. Department of Transportation, on a quarterly basis. We further estimate that approximately 133 air carriers and foreign air carriers will also have to conduct an annual audit of their September 11th Security Fee activities and accounts.

Affected Public: The first information collection requirement applies to any direct air carrier or foreign air carrier providing air transportation, foreign air transportation, and intrastate air transportation, originating at airports in the United States, on either (1) a scheduled passenger or public charter passenger operation with an aircraft having passenger seating configuration of more than 60 seats or (2) a scheduled passenger or public charter passenger operation with an aircraft having a passenger seating configuration of less than 61 seats when passengers are enplaned from or deplaned into a sterile area. The further requirement to conduct an audit only applies to air carriers and foreign air carriers that collect September 11th Security Fees from more than 50,000 passengers annually.

Abstract: To pay for the costs of providing civil aviation security services as described in 49 U.S.C. 44940, a uniform fee is imposed on passengers of air carriers and foreign air carriers providing air transportation, foreign air transportation, and intrastate air transportation originating at airports in the United States.

Estimated Annual Burden: Using the above estimate of 195 carriers a year who may have to submit quarterly reports, with an estimated 1 hour of preparation to collect and provide the information, at an assumed rate of $20 an hour, the annual estimated cost of collecting and preparing the information necessary for 780 quarterly reports is $15,600. Adding in a postage cost of $265.20 (780 reports at a cost of 34 cents to mail each one), we estimate that it will cost $15,865.20 a year to prepare and submit the information necessary to satisfy the general information collection requirement.

Air carriers and foreign air carriers who will also have to conduct audits of their September 11th Security Fee activities and accounts will have an additional record-keeping burden. Using the above estimate of 133 carriers a year who may have to conduct audits, with an estimated 20 hours of preparation per audit, at an assumed rate of $30 an hour, the estimated cost of these audits is about $79,800 annually.

The total estimated cost of preparing and submitting quarterly reports and conducting audits is $95,665.20 and the total estimated burden hours are 3,440. However, we believe the actual burden will be lower because the Transportation Security Administration will provide a mechanism for the electronic submission of quarterly reports, which will reduce costs.

Number of Respondents: We estimate that there will be 195 respondents per year for the general information collection and 133 respondents for the audit-related collection.

Summary of the Collection of Information: For purposes of collecting funds to pay for the costs of providing civil aviation security services as described in 49 U.S.C. 44940, air carriers and foreign air carriers will be required to track passenger emplanements for air transportation, foreign air transportation, and intrastate air transportation originating at airports in the United States if the enplanement is on either (1) a scheduled passenger or public charter passenger operation with an aircraft having passenger seating configuration of more than 60 seats or (2) a scheduled passenger or public charter passenger operation with an aircraft having a passenger seating configuration of less than 61 seats when passengers are enplaned from or deplaned into a sterile area. These air carriers must submit quarterly reports on the total September 11th Security Fees imposed, collected, refunded and remitted, the number of enplanements for which a fee was collected, the total number of frequent flyer and nonrevenue passengers enplaned, and the total number of enplanements for which the fee was not collected. The reports must also explain why any September 11th Security Fee that should have been collected under 49 CFR part 1510 was not collected.

Additionally, each air carrier and foreign air carrier that collects September 11th Security Fees from more than 50,000 passengers annually must provide for an audit at least annually of its September 11th Security Fee activities and accounts. The accountant conducting such an audit must include in it an opinion on whether (1) the direct air carrier's or foreign air carrier's procedures for collecting, holding, and remitting the

fees are fair and reasonable; and (2) whether the quarterly reports fairly represent the net transactions in the security service fee accounts.

Issued on: January 29, 2002.

Donna R. McLean,

Assistant Secretary for Budget and Programs, Chief Financial Officer, Department of Transportation.

[FR Doc. 02–2563 Filed 1–30–02; 10:45 am]

BILLING CODE 4910–62–P

Federal Register

Thursday,
January 31, 2002

Part VI

Department of Transportation

Transportation Security Administration

Reports, Forms and Record Keeping Requirements Agency Information Collection Activity Under OMB Review; Notice

DEPARTMENT OF TRANSPORTATION

Transportation Security Administration

[Docket No. TSA 2001–11120]

Reports, Forms and Record Keeping Requirements Agency Information Collection Activity Under OMB Review

AGENCY: Transportation Security Administration, DOT.

ACTION: Emergency **Federal Register** notice.

SUMMARY: The U.S. Department of Transportation, Transportation Security Administration, has submitted the following request for emergency processing of a public information collection to the Office of Management and Budget (OMB) for review and clearance under the Paperwork Reduction Act of 1995 (Pub. L. 104–13, 44 U.S.C. chapter 35.) This notice announces that the Information Collection Request (ICR) abstracted below has been forwarded to OMB for review and comment. The ICR describes the nature of the information collections and their expected burden.

Comments: Comments should be directed to the Office of Information and Regulatory Affairs, Office of Management and Budget, 725 Seventeenth Street, NW., Washington, DC 20503, Attention: Desk Officer for the Transportation Security Administration.

Type of Request: New.

Form Number: This proposed collection of information would not use any standard forms.

DATES: OMB approval has been requested by January 31, 2002.

FOR FURTHER INFORMATION CONTACT: Rita Maristch, Office of the General Counsel, Office of Environmental, Civil Rights, and General Law, Department of Transportation (C–10), 400 Seventh Street, SW., Room 10102, Washington, DC 20590, (202) 366–9161 (voice), (202) 366–9170 (fax). You may also contact Steven Cohen, Office of the General Counsel (C–10), at (202) 366–4684.

SUPPLEMENTARY INFORMATION:

Transportation Security Administration

Title: Imposition and Collection of Passenger Civil Aviation Security Service Fees.

OMB Control Number: None assigned.

Frequency: On December 31, 2001, the Transportation Security Administration published an interim final rule imposing a security service fee (September 11th Security Fee) on page 67698 of volume 66 of the **Federal Register**. Imposition of this fee begins February 1, 2002. Approximately 195 air carriers and foreign air carriers are expected to collect and remit the September 11th Security Fee. Each of these carriers would then be responsible for (1) establishing and maintaining an accounting system to account for the September 11th Security Fees that are imposed, collected, refunded and remitted and (2) reporting this information to the Transportation Security Administration, U.S. Department of Transportation, on a quarterly basis. We further estimate that approximately 133 air carriers and foreign air carriers will also have to conduct an annual audit of their September 11th Security Fee activities and accounts.

Affected Public: The first information collection requirement applies to any direct air carrier or foreign air carrier providing air transportation, foreign air transportation, and intrastate air transportation, originating at airports in the United States, on either (1) a scheduled passenger or public charter passenger operation with an aircraft having passenger seating configuration of more than 60 seats or (2) a scheduled passenger or public charter passenger operation with an aircraft having a passenger seating configuration of less than 61 seats when passengers are enplaned from or deplaned into a sterile area. The further requirement to conduct an audit only applies to air carriers and foreign air carriers that collect September 11th Security Fees from more than 50,000 passengers annually.

Abstract: To pay for the costs of providing civil aviation security services as described in 49 U.S.C. 44940, a uniform fee is imposed on passengers of air carriers and foreign air carriers providing air transportation, foreign air transportation, and intrastate air transportation originating at airports in the United States.

Estimated Annual Burden: Using the above estimate of 195 carriers a year who may have to submit quarterly reports, with an estimated 1 hour of preparation to collect and provide the information, at an assumed rate of $20 an hour, the annual estimated cost of collecting and preparing the information necessary for 780 quarterly reports is $15,600. Adding in a postage cost of $265.20 (780 reports at a cost of 34 cents to mail each one), we estimate that it will cost $15,865.20 a year to prepare and submit the information necessary to satisfy the general information collection requirement.

Air carriers and foreign air carriers who will also have to conduct audits of their September 11th Security Fee activities and accounts will have an additional record-keeping burden. Using the above estimate of 133 carriers a year who may have to conduct audits, with an estimated 20 hours of preparation per audit, at an assumed rate of $30 an hour, the estimated cost of these audits is about $79,800 annually.

The total estimated cost of preparing and submitting quarterly reports and conducting audits is $95,665.20 and the total estimated burden hours are 3,440. However, we believe the actual burden will be lower because the Transportation Security Administration will provide a mechanism for the electronic submission of quarterly reports, which will reduce costs.

Number of Respondents: We estimate that there will be 195 respondents per year for the general information collection and 133 respondents for the audit-related collection.

Summary of the Collection of Information: For purposes of collecting funds to pay for the costs of providing civil aviation security services as described in 49 U.S.C. 44940, air carriers and foreign air carriers will be required to track passenger emplanements for air transportation, foreign air transportation, and intrastate air transportation originating at airports in the United States if the enplanement is on either (1) a scheduled passenger or public charter passenger operation with an aircraft having passenger seating configuration of more than 60 seats or (2) a scheduled passenger or public charter passenger operation with an aircraft having a passenger seating configuration of less than 61 seats when passengers are enplaned from or deplaned into a sterile area. These air carriers must submit quarterly reports on the total September 11th Security Fees imposed, collected, refunded and remitted, the number of enplanements for which a fee was collected, the total number of frequent flyer and nonrevenue passengers enplaned, and the total number of enplanements for which the fee was not collected. The reports must also explain why any September 11th Security Fee that should have been collected under 49 CFR part 1510 was not collected.

Additionally, each air carrier and foreign air carrier that collects September 11th Security Fees from more than 50,000 passengers annually must provide for an audit at least annually of its September 11th Security Fee activities and accounts. The accountant conducting such an audit must include in it an opinion on whether (1) the direct air carrier's or foreign air carrier's procedures for collecting, holding, and remitting the

fees are fair and reasonable; and (2) whether the quarterly reports fairly represent the net transactions in the security service fee accounts.

Issued on: January 29, 2002.

Donna R. McLean,

Assistant Secretary for Budget and Programs, Chief Financial Officer, Department of Transportation.

[FR Doc. 02–2563 Filed 1–30–02; 10:45 am]

BILLING CODE 4910–62–P

Reader Aids

Federal Register

Vol. 67, No. 21

Thursday, January 31, 2002

CUSTOMER SERVICE AND INFORMATION

Federal Register/Code of Federal Regulations

General Information, indexes and other finding aids	**202–523–5227**
Laws	**523–5227**
Presidential Documents	
Executive orders and proclamations	**523–5227**
The United States Government Manual	**523–5227**
Other Services	
Electronic and on-line services (voice)	**523–3447**
Privacy Act Compilation	**523–3187**
Public Laws Update Service (numbers, dates, etc.)	**523–6641**
TTY for the deaf-and-hard-of-hearing	**523–5229**

ELECTRONIC RESEARCH

World Wide Web

Full text of the daily Federal Register, CFR and other publications is located at: **http://www.access.gpo.gov/nara**

Federal Register information and research tools, including Public Inspection List, indexes, and links to GPO Access are located at: **http://www.nara.gov/fedreg**

E-mail

FEDREGTOC-L (Federal Register Table of Contents LISTSERV) is an open e-mail service that provides subscribers with a digital form of the Federal Register Table of Contents. The digital form of the Federal Register Table of Contents includes HTML and PDF links to the full text of each document.

To join or leave, go to **http://listserv.access.gpo.gov** and select *Online mailing list archives, FEDREGTOC-L, Join or leave the list (or change settings);* then follow the instructions.

PENS (Public Law Electronic Notification Service) is an e-mail service that notifies subscribers of recently enacted laws.

To subscribe, go to **http://hydra.gsa.gov/archives/publaws-l.html** and select *Join or leave the list* (or change settings); then follow the instructions.

FEDREGTOC-L and **PENS** are mailing lists only. We cannot respond to specific inquiries.

Reference questions. Send questions and comments about the Federal Register system to: **info@fedreg.nara.gov**

The Federal Register staff cannot interpret specific documents or regulations.

FEDERAL REGISTER PAGES AND DATE, JANUARY

1–264 2
265–478 3
479–638 4
639–790 7
791–1066 8
1067–1274 9
1275–1412 10
1413–1602 11
1603–1858 14
1859–2130 15
2131–2316 16
2317–2548 17
2549–2792 18
2793–3034 22
3035–3426 23
3427–3580 24
3581–3810 25
3811–4166 28
4167–4324 29
4325–4648 30
4649–4868 31

CFR PARTS AFFECTED DURING JANUARY

At the end of each month, the Office of the Federal Register publishes separately a List of CFR Sections Affected (LSA), which lists parts and sections affected by documents published since the revision date of each title.

3 CFR

Proclamations:
7463 (See EO 13253) 2791
7516 479
7517 2787

Executive Orders:
12171 (Amended by EO 13252) 1601
12343 (Revoked by EO 13251) 1599
12543 (See Notice of January 3, 2002) 637
12544 (See Notice of January 3, 2002) 637
12947 (See Notice of January 18, 2002) 3033
13099 (See Notice of January 18, 2002) 3033
13182 (Superseded by EO 13249) 639
13194 (See Notice of January 15, 2002) 2547
13213 (See Notice of January 15, 2002) 2547
13223 (Amended by EO 13253) 2791
13249 639
13250 1597
13251 1599
13252 1601
13253 2791

Administrative Orders:

Notices:
Notice of January 3, 2002 637
Notice of January 15, 2002 2547
Notice of January 18, 2002 3033

5 CFR

532 3035
534 3581
1201 3811

Proposed Rules:
213 3128
970 3266

7 CFR

301 ..... 1067, 3427, 3583
353 2317
354 1070
457 3036
764 791
905 801
920 1413
987 1275
1410 2131
1464 481
1703 3039
1721 484
1945 791

Proposed Rules:
Ch. I 525
330 697
800 25
930 3540
Ch. IX 525
925 1315
959 1317
979 1319
Ch. X 525
Ch. XI 525
1240 849
1464 526
1703 3128
1755 4679
3017 3266
3021 3266

8 CFR

103 4784
212 4784
214 4784
274a 4784
299 4784

Proposed Rules:
236 1670

9 CFR

93 ..... 649, 1418
94 ..... 649, 1072
101 1910
116 1910
381 1277
391 3428
590 3428
592 3428
441 1277

Proposed Rules:
316 4212
317 4212
381 4212

10 CFR

1 3584
2 3263
19 3263
20 ..... 3263, 3584
21 3263
30 3263
34 3584
40 3263
51 3263
60 3263
61 3263
63 3263
70 ..... 3263, 3584
71 3584
72 ..... 3263, 3431, 3584
73 ..... 3263, 3584
75 3263
1008 4167

Proposed Rules:
35 274
50 4214
63 3628
430 3449
606 3266
607 3266
1036 3266

12 CFR

3 3784
28 4325
208 3784
225 3784
325 3784
516 3264
614 1281
619 1281
1777 3587

13 CFR

121 3041
Proposed Rules:
121 3826
125 3826
126 3826
145 3266
147 3266

14 CFR

25 ....487, 2118, 2793
39 ....1, 123, 265, 489, 491, 492, 494, 495, 497, 499, 500, 502, 503, 505, 507, 509, 651, 653, 809, 812, 815, 1286, 1603, 1859, 2132, 2317, 2318, 2320, 2323, 2795, 2797, 2799, 2801, 2802, 2804, 3605, 4171, 4326, 4328, 4331, 4332, 4333, 4335, 4338, 4340, 4342, 4344, 4346, 4349, 4351, 4649, 4650, 4652
43 2098
45 2098
71 ....510, 511, 512, 513, 514, 515, 516, 517, 816, 2134, 2806, 3264, 4654, 4655
73 2807
91 2774
95 2808
97 ....267, 269, 1288, 1289, 3608, 3610, 3611
107 ....655, 3810, 3682
108 ....655, 3810
121 ....2112, 2118
330 250
Proposed Rules:
Ch. I 4680
23 4215
25 ....1846, 2827, 3456, 4856
39 ....29, 31, 33, 35, 38, 40, 530, 534, 537, 538, 541, 542, 544, 547, 550, 697, 700, 1165, 1167, 1169, 1419, 1670, 1913, 2145, 2146, 3844, 4683, 4685
71 ....552, 702, 703, 704, 705, 706, 1322, 2148, 2149, 2150, 2151, 2152, 2154, 2155, 2156, 2613, 2828, 2830, 2832, 2835, 2836, 3263, 3264
93 123
330 263
1265 3266
1267 3266

15 CFR

4a 2135
743 458
752 458
772 458
774 458
Proposed Rules:
26 3266
29 3266
70 3631

16 CFR

4 123
305 4172
Proposed Rules:
310 4492
432 1915
1500 4373

17 CFR

228 232
229 232
230 228
240 232
241 6
249 232

17 CFR

240 3056

18 CFR

Proposed Rules:
35 3632
101 1026
201 1026
284 44
352 1026
388 3129

19 CFR

10 3058
12 ....953, 1809
Proposed Rules:
35 3632
141 3135
142 3135

20 CFR

Proposed Rules:
345 2157
436 3266
439 3266

21 CFR

173 271
330 3059
864 1606
876 3431
Proposed Rules:
1404 3266
1405 3266

22 CFR

41 1413
42 ....1414, 1415
126 1074
Proposed Rules:
137 3266
139 3266
196 1420
208 3266
210 3266
310 3266
312 3266
1006 3266
1008 3266
1508 3266
1509 3266

23 CFR

Proposed Rules:
650 2837

24 CFR

Proposed Rules:
570 2960

25 CFR

170 1290
500 2384
513 1274
Proposed Rules:
292 3846
542 ....1917, 3461

26 CFR

1 ....8, 817, 1075, 2327, 2841, 3811, 4173, 4177
53 3076
301 ....1416, 2327, 3076
602 ....8, 817, 1075, 3076, 4177
Proposed Rules:
1 ....48, 1672, 2387, 3461, 3846, 4217, 4218
31 3846
46 707
301 ....1421, 2387, 2549, 2558
602 1421

27 CFR

Proposed Rules:
4 3135

28 CFR

2 2568

29 CFR

102 ....656, 657
1912 658
1912a 658
1915 2846
2520 ....772, 777
2560 ....772, 777
2570 777
4022 1861
4044 1861
Proposed Rules:
94 3266
98 3266
2700 1673
1471 3266
1472 3266

30 CFR

203 1862
Proposed Rules:
250 ....275, 1171, 3632
917 3847
931 1173
938 3633
948 4689

32 CFR

199 4353
Proposed Rules:
25 3266
26 3266
199 4375
326 1673
505 1421
806B 1423

33 CFR

84 2329
100 4656
110 17
117 ....17, 1095, 1416, 1417, 1607, 4177
160 2571
165 ....517, 1097, 1099, 1101, 1607, 2330, 2332, 2571, 3812, 3814, 4177, 4355, 4656, 4658, 4660, 4662, 4664, 4665
183 2329
Proposed Rules:
100 1177
165 ....2614, 4218, 4692
167 2616
401 3466

34 CFR

75 4316
Proposed Rules:
Ch. II 2770
84 3266
85 3266
303 1410
668 3266
682 3266

36 CFR

Proposed Rules:
2 1424
7 1424
1209 3266
1212 3266

37 CFR

1 520
Proposed Rules:
255 4694

38 CFR

2 3433
3 3612
15 3433
17 ....4357, 4667
52 660
19 3099
20 3099
Proposed Rules:
3 200
17 200
21 200
44 3266
48 3266

39 CFR

3 2135
Proposed Rules:
111 ....275, 2388, 4562

40 CFR

9 ....1812, 3370
50 1430
52 ....18, 19, 822, 2573, 2811, 3816, 3819, 4668, 4669
60 1295
61 ....1295, 3106
62 ....271, 42179
63 ....825, 1295, 3106, 4181, 4359, 4363

70 ....1431, 4673
72 1295
75 1295
80 ....3435, 3440, 4674
82 4185
122 4675
141 1812
142 1812
180 ....1102, 1880, 2333, 2580, 3113
260 2962
261 ....1888, 1896
264 2962
271 2962
434 3370
Proposed Rules:
3 278
32 3266
36 3266
51 278
52 ....50, 849, 3849, 4695
55 2846
60 ....278, 1676, 4377
61 ....1676, 3137
62 ....279, 4220
63 ....278, 850, 2286, 2390, 3137, 4221, 4378
70 278
80 3468
82 4222
86 ....2159, 3640
123 278
142 278
145 278
162 278
180 ....1917, 1925, 2175, 2393
233 278
257 278
258 278
260 2518
261 2518
264 2518
265 2518
266 2518
268 2518
270 2518
271 ....278, 1931, 2518
281 ....278, 4225
403 278
501 278
721 1937
725 1179
745 278
763 278

41 CFR

101–44 2583
102–37 2583
105–68 3266
105–74 3266
Ch. 301 1899
301–10 1902

42 CFR

82 2343
447 2602
Proposed Rules:
81 2397
Ch. VI 3641
401 3662

43 CFR

2 4367
4 4367
7 4367
10 4367
13 4367
35 4367
Proposed Rules:
12 3266
42 3266
43 3266
3430 ....2618, 4316
3470 ....2618, 4316

44 CFR

65 ....1610, 1611
67 ....675, 1614
Proposed Rules:
17 3266
21 3266
67 709
206 3412

45 CFR

Proposed Rules:
76 3266
82 3266
620 3266
630 3266
689 3666
1154 3266
1155 3266
1169 3266
1173 3266
1185 3266
1186 3266
1626 3470
2542 3266
2545 3266

46 CFR

25 2329
126 2343

47 CFR

Ch. 1 ....3616, 3617
0 4675
1 ....1615, 3441, 3620
6 678
7 678
15 1623
20 ....1626, 1643, 1903, 4675
22 ....1626, 4675
54 ....3118, 3441, 3620
64 ....1643, 2814, 3621, 4203
73 ....828, 829, 830, 3622
76 ....678, 1649
87 4675
Proposed Rules:
51 ....1945, 1947
64 4227
73 ....851, 1704
76 1704
95 1710

48 CFR

19 1858
52 ....1858, 3441
202 4207
209 4208
212 4208
213 4208
215 4207
217 4208
219 4207
222 4208
225 4209
242 4207
246 4207
252 ....4209, 4210
Proposed Rules:
23 631
52 631
208 4231
239 4231
251 4231
252 4231
1813 3669
1852 3669

49 CFR

1 629
40 4677
192 1108
195 ....831, 1650, 2136
199 2611
214 1903
219 ....21, 1116
240 22
Proposed Rules:
29 3266
32 3266
173 852
176 3673
192 ....1537, 3675
195 3675
219 3138
241 2179
529 710
531 710
533 ....710, 3471, 4379
535 710
537 710
538 ....710, 713
541 710
542 710
543 710
544 710
551 710
552 710
553 710
554 710
555 710
556 710
557 710
564 710
565 710
566 710
567 ....710, 4695
568 ....710, 4695
569 710
570 710
572 710
573 710
574 710
575 710
576 710
577 710
578 710
579 710

50 CFR

17 ....680, 1662, 3120
216 2820
223 1116
229 ....1133, 1142
600 ....1540, 2343, 3820
622 ....4210, 4677
635 1668
648 ....1908, 2824, 3126, 3442, 3444, 3623
660 ....1540, 3820, 4369
679 ....956, 1160, 1163, 3126, 3446, 3447, 3825, 4100, 4677
Proposed Rules:
17 ....280, 1712, 3675, 3849, 3940
216 4379
229 1300
300 3867
600 1555
622 ....1323, 3679, 4696
635 629
648 1324
660 ....1186, 1555
679 1325
697 ....282, 4697

REMINDERS

The items in this list were editorially compiled as an aid to Federal Register users. Inclusion or exclusion from this list has no legal significance.

RULES GOING INTO EFFECT JANUARY 31, 2002

ENVIRONMENTAL PROTECTION AGENCY

Air quality implementation plans; approval and promulgation; various States:

Alabama; published 1-31-02

FEDERAL COMMUNICATIONS COMMISSION

Common carrier services:

Telecommunications Act of 1996; implementation—

Telecommunications service, equipment, and customer premises equipment; access by persons with disabilities; published 1-7-02

TRANSPORTATION DEPARTMENT

Federal Aviation Administration

Airworthiness directives:

Airbus; published 12-27-01

Boeing; published 12-27-01

Eurocopter France; published 1-16-02

Grob-Werke Gmbh & Co. KG; published 1-8-02

VETERANS AFFAIRS DEPARTMENT

Medical benefits:

Compensated Work Therapy/Transitional Residence Program; published 1-31-02

COMMENTS DUE NEXT WEEK

AGRICULTURE DEPARTMENT

Agricultural Marketing Service

Cherries (tart) grown in—

Michigan et al.; comments due by 2-13-02; published 1-24-02 [FR 02-01423]

Grapes grown in—

California; comments due by 2-11-02; published 1-10-02 [FR 02-00576]

Melons grown in—

Texas; comments due by 2-11-02; published 1-10-02 [FR 02-00577]

Onions grown in—

Texas; comments due by 2-11-02; published 1-10-02 [FR 02-00575]

AGRICULTURE DEPARTMENT

Animal and Plant Health Inspection Service

Exportation and importation of animals and animal products:

Bovine spongiform encephalopathy; disease status change—

Czech Republic; comments due by 2-4-02; published 12-4-01 [FR 01-30001]

Plant-related quarantine, foreign:

Nursery stock regulations; update; comments due by 2-26-02; published 12-28-01 [FR 01-31602]

Plant pest regulations update; risk-based criteria; comments due by 2-6-02; published 1-7-02 [FR 02-00263]

Plant quarantine safeguard regulations:

Untreated oranges, tangerines, and grapefruit from Mexico transiting U.S. to foreign countries; comments due by 2-4-02; published 12-4-01 [FR 01-30000]

AGRICULTURE DEPARTMENT

Commodity Credit Corporation

Conservation Reserve Program:

Cropland eligibility and private sector technical assistance; comments due by 2-4-02; published 12-6-01 [FR 01-30213]

AGRICULTURE DEPARTMENT

Rural Utilities Service

Rural development:

Distance Learning and Telemedicine Loan and Grant Program; comments due by 2-22-02; published 1-23-02 [FR 02-01537]

AGRICULTURE DEPARTMENT

Rural Utilities Service

Rural development:

Distance Learning and Telemedicine Loan and Grant Program; comments due by 2-22-02; published 1-23-02 [FR 02-01538]

COMMERCE DEPARTMENT

Census Bureau

Census 2000:

Cutoff dates for boundary changes recognition; comments due by 2-25-02; published 1-25-02 [FR 02-01815]

COMMERCE DEPARTMENT

Export Administration Bureau

Export administration regulations:

Missile technology-controlled items destined to Canada; export and reexport licensing exemption removal; comments due by 2-19-02; published 12-20-01 [FR 01-31322]

COMMERCE DEPARTMENT

National Oceanic and Atmospheric Administration

Endangered and threatened species:

Findings on petitions, etc.—

Atlantic white marlin; comments due by 2-19-02; published 12-20-01 [FR 01-31285]

Sea turtle conservation requirements; comments due by 2-15-02; published 12-14-01 [FR 01-30929]

COMMERCE DEPARTMENT

National Oceanic and Atmospheric Administration

Fishery conservation and management:

Alaska; fisheries of Exclusive Economic Zone—

Steller sea lion protection measures; comments due by 2-7-02; published 1-8-02 [FR 01-32251]

COMMERCE DEPARTMENT

National Oceanic and Atmospheric Administration

Fishery conservation and management:

Atlantic coastal fisheries cooperative management—

American lobster; comments due by 2-4-02; published 1-3-02 [FR 02-00142]

Atlantic highly migratory species—

Recreational landings monitoring; comments due by 2-19-02; published 12-26-01 [FR 01-31662]

Recreational landings monitoring; correction; comments due by 2-19-02; published 1-4-02 [FR C1-31662]

Caribbean, Gulf, and South Atlantic fisheries—

Puerto Rico and U.S. Virgin Islands queen conch resources; comments due by 2-11-02; published 1-10-02 [FR 02-00645]

Snapper-grouper; comments due by 3-4-02; published 1-31-02 [FR 02-02301]

West Coast States and Western Pacific fisheries—

Pacific coast groundfish; comments due by 2-11-02; published 1-11-02 [FR 01-32262]

COMMERCE DEPARTMENT

National Oceanic and Atmospheric Administration

Fishery conservation and management:

West Coast States and Western Pacific fisheries—

Pacific coast groundfish; comments due by 2-11-02; published 1-11-02 [FR 01-32261]

COMMERCE DEPARTMENT

National Oceanic and Atmospheric Administration

International fisheries regulations:

Pacific halibut—

Guided recreational fishery; guideline harvest levels; comments due by 2-27-02; published 1-28-02 [FR 02-02005]

COMMERCE DEPARTMENT

National Oceanic and Atmospheric Administration

Marine mammals:

Incidental taking—

Atlantic Large Whale Take Reduction Plan; comments due by 2-8-02; published 1-9-02 [FR 02-00274]

COMMERCE DEPARTMENT

National Oceanic and Atmospheric Administration

Marine mammals:

Incidental taking—

Atlantic Large Whale Take Reduction Plan; comments due by 2-11-02; published 1-10-02 [FR 02-00273]

Permits:

Endangered and threatened species:; comments due by 2-4-02; published 12-21-01 [FR 01-31544]

Marine mammals; comments due by 3-7-02; published 1-8-02 [FR 02-00439]

DEFENSE DEPARTMENT

Acquisition regulations:

Performance-based contracting; comments due by 2-4-02; published 12-6-01 [FR 01-30262]

DEFENSE DEPARTMENT

Acquisition regulations:

Research and development streamlined contracting procedures; comments due by 2-4-02; published 12-6-01 [FR 01-30261]

Federal Acquisition Regulation (FAR):

Hazardous material safety data; comments due by 3-5-02; published 1-4-02 [FR 02-00117]

EDUCATION DEPARTMENT

Elementary and secondary education:

Disadvantaged children; academic achievement improvement; comments due by 2-19-02; published 1-18-02 [FR 02-01341]

ENERGY DEPARTMENT

Energy Efficiency and Renewable Energy Office

Consumer products; energy conservation program:

Test procedures—

Water heaters; comments due by 2-25-02; published 1-24-02 [FR 02-01747]

ENVIRONMENTAL PROTECTION AGENCY

Air pollution control:

State operating permits programs—

Iowa; comments due by 2-11-02; published 1-11-02 [FR 02-00757]

ENVIRONMENTAL PROTECTION AGENCY

Air programs:

Fuels and fuel additives—

Denver/Boulder, CO; Federal summer gasoline Reid Vapor Pressure volatility standard; relaxation; comments due by 2-25-02; published 1-24-02 [FR 02-01493]

ENVIRONMENTAL PROTECTION AGENCY

Air programs:

Fuels and fuel additives—

Denver/Boulder, CO; Federal summer gasoline Reid Vapor Pressure volatility standard; relaxation; comments due by 2-25-02; published 1-24-02 [FR 02-01494]

Outer Continental Shelf regulations—

California; consistency update; comments due by 2-21-02; published 1-22-02 [FR 02-01497]

ENVIRONMENTAL PROTECTION AGENCY

Air programs:

Stratospheric ozone protection—

Fire suppression substitutes for ozone-depleting substances; restrictions removal; list of substitutes; comments due by 2-28-02; published 1-29-02 [FR 02-01495]

ENVIRONMENTAL PROTECTION AGENCY

Air programs:

Stratospheric ozone protection—

Fire suppression substitutes for ozone-depleting substances; restrictions removal; list of substitutes; comments due by 2-28-02; published 1-29-02 [FR 02-01496]

ENVIRONMENTAL PROTECTION AGENCY

Air programs; approval and promulgation; State plans for designated facilities and pollutants:

Various States; comments due by 2-4-02; published 1-3-02 [FR 02-00104]

ENVIRONMENTAL PROTECTION AGENCY

Air programs; approval and promulgation; State plans for designated facilities and pollutants:

Various States; comments due by 2-4-02; published 1-3-02 [FR 02-00105]

ENVIRONMENTAL PROTECTION AGENCY

Air programs; approval and promulgation; State plans for designated facilities and pollutants:

Various States; comments due by 2-28-02; published 1-29-02 [FR 02-02119]

ENVIRONMENTAL PROTECTION AGENCY

Air programs; approval and promulgation; State plans for designated facilities and pollutants:

Various States; comments due by 2-28-02; published 1-29-02 [FR 02-02120]

ENVIRONMENTAL PROTECTION AGENCY

Air programs; State authority delegations:

Idaho; comments due by 2-22-02; published 1-23-02 [FR 02-01119]

ENVIRONMENTAL PROTECTION AGENCY

Air programs; State authority delegations:

Idaho; comments due by 2-22-02; published 1-23-02 [FR 02-01120]

Maine; comments due by 2-7-02; published 1-17-02 [FR 02-01244]

Maryland; comments due by 3-1-02; published 1-30-02 [FR 02-02231]

ENVIRONMENTAL PROTECTION AGENCY

Air programs; State authority delegations:

Maryland; comments due by 3-1-02; published 1-30-02 [FR 02-02230]

Pennsylvania; comments due by 2-28-02; published 1-29-02 [FR 02-02121]

ENVIRONMENTAL PROTECTION AGENCY

Air programs; State authority delegations:

Pennsylvania; comments due by 2-28-02; published 1-29-02 [FR 02-02122]

ENVIRONMENTAL PROTECTION AGENCY

Air programs; State authority delegations:

Pennsylvania; comments due by 3-1-02; published 1-30-02 [FR 02-02228]

ENVIRONMENTAL PROTECTION AGENCY

Air programs; State authority delegations:

Various States; comments due by 2-13-02; published 1-14-02 [FR 02-00702]

ENVIRONMENTAL PROTECTION AGENCY

Air programs; State authority delegations:

Virginia; comments due by 2-7-02; published 1-8-02 [FR 02-00407]

ENVIRONMENTAL PROTECTION AGENCY

Air programs; State authority delegations:

Virginia; comments due by 2-7-02; published 1-8-02 [FR 02-00408]

ENVIRONMENTAL PROTECTION AGENCY

Air quality implementation plans; approval and promulgation; various States:

Alaska; comments due by 2-7-02; published 1-8-02 [FR 02-00218]

ENVIRONMENTAL PROTECTION AGENCY

Air quality implementation plans; approval and promulgation; various States:

Alaska; comments due by 2-7-02; published 1-8-02 [FR 02-00219]

ENVIRONMENTAL PROTECTION AGENCY

Air quality implementation plans; approval and promulgation; various States:

California; comments due by 2-27-02; published 1-28-02 [FR 02-02006]

ENVIRONMENTAL PROTECTION AGENCY

Air quality implementation plans; approval and promulgation; various States:

California; comments due by 2-27-02; published 1-28-02 [FR 02-02007]

ENVIRONMENTAL PROTECTION AGENCY

Air quality implementation plans; approval and promulgation; various States:

California; comments due by 2-27-02; published 1-28-02 [FR 02-02008]

Electronic reporting establishment; electronic records

Comment period extension and public meetings; comments due by 2-27-02; published 1-3-02 [FR 02-00109]

Hazardous waste program authorizations:

Washington; comments due by 2-14-02; published 1-15-02 [FR 02-00626]

Hazardous waste:

State underground storage tank program approvals—

South Carolina; comments due by 2-28-02; published 1-29-02 [FR 02-02123]

FEDERAL COMMUNICATIONS COMMISSION

Common carrier services:

Individuals with hearing and speech disabilities; telecommunications relay services

Cost recovery guidelines; clarification and temporary waiver requests; comments due by 2-28-02; published 1-29-02 [FR 02-01981]

Interconnection—

Incumbent local exchange carriers broadband telecommunications

services; regulatory requirements; comment request; comments due by 3-1-02; published 1-15-02 [FR 02-00903]
Radio broadcasting:
Broadcast stations and newspapers; cross-ownership; comments due by 2-15-02; published 1-8-02 [FR 02-00372]
Multiple ownership of radio broadcast stations in local markets; rules and policies and radio markets definition; comments due by 2-11-02; published 12-11-01 [FR 01-30527]
Radio frequency devices:
Biennial review and update of rules; comments due by 2-11-02; published 11-27-01 [FR 01-29344]
Radio services, special:
Personal radio services—
Garmin International, Inc.; short-range two-way voice communication service; comments due by 2-13-02; published 1-14-02 [FR 02-00787]
Radio stations; table of assignments:
Arizona; comments due by 2-11-02; published 1-8-02 [FR 02-00376]
Various States; comments due by 2-4-02; published 1-8-02 [FR 02-00370]
Wisconsin; comments due by 2-19-02; published 1-14-02 [FR 02-00786]
Television stations; table of assignments:
Colorado; comments due by 2-4-02; published 12-21-01 [FR 01-31457]

FEDERAL DEPOSIT INSURANCE CORPORATION
Federal Deposit Insurance Act:
Post-insolvency interest payment in receiverships with surplus funds; comments due by 2-19-02; published 12-18-01 [FR 01-31162]

FEDERAL HOUSING FINANCE BOARD
Affordable Housing Program; amendments; comments due by 2-25-02; published 12-27-01 [FR 01-31569]

GENERAL SERVICES ADMINISTRATION
Federal Acquisition Regulation (FAR):
Hazardous material safety data; comments due by 3-5-02; published 1-4-02 [FR 02-00117]

HEALTH AND HUMAN SERVICES DEPARTMENT
Centers for Medicare & Medicaid Services
Standards and certification:
Medicare and Medicaid programs; emergency recertification for Organ Procurement Organizations (OPOs) coverage; comments due by 2-26-02; published 12-28-01 [FR 01-31724]

HEALTH AND HUMAN SERVICES DEPARTMENT
Inspector General Office, Health and Human Services Department
Medicare and State health care programs:
Safe harbor provisions and special fraud alerts; intent to develop regulations; comments due by 2-19-02; published 12-19-01 [FR 01-31207]

INTERIOR DEPARTMENT
Indian Affairs Bureau
Economic enterprises:
Gaming on trust lands acquired after Octover 17, 1988; determination procedures; comments due by 2-25-02; published 12-27-01 [FR 01-31664]

INTERIOR DEPARTMENT
Indian Affairs Bureau
Transportation Equity Act for 21st Century; implementation:
Indian Reservation Roads funds; 2002 FY funds distribution; comments due by 2-11-02; published 1-10-02 [FR 02-00268]

INTERIOR DEPARTMENT
Land Management Bureau
Minerals management:
Coal management—
Coal lease modifications, etc.; comments due by 2-19-02; published 1-18-02 [FR 02-01339]
Coal lease modifications, etc.; correction; comments due by 2-19-02; published 1-29-02 [FR C2-01339]

INTERIOR DEPARTMENT
Fish and Wildlife Service
Endangered and threatened species:
Findings on petitions, etc.—
Miami blue butterfly; comments due by 3-4-02; published 1-3-02 [FR 02-00036]
San Miguel Island fox, etc. (4 subspecies of island fox); comments due by 2-8-02; published 12-10-01 [FR 01-30188]
Tumbling Creek cavesnail; comments due by 2-25-02; published 12-27-01 [FR 01-31306]
Migratory bird permits:
Rehabilitation activities and permit exceptions; comments due by 3-6-02; published 12-6-01 [FR 01-30297]

INTERIOR DEPARTMENT
Minerals Management Service
Outer Continental Shelf; oil, gas, and sulphur operations:
Exploration under salt sheets; operations suspension; comments due by 2-8-02; published 1-9-02 [FR 02-00521]
Fixed and floating platforms; documents incorporated by reference; comments due by 2-25-02; published 12-27-01 [FR 01-31723]
Pressure Vessel Inspection Code; incorporation by reference; comments due by 2-25-02; published 12-27-01 [FR 01-31710]

INTERIOR DEPARTMENT
Surface Mining Reclamation and Enforcement Office
Permanent program and abandoned mine land reclamation plan submissions:
New Mexico; comments due by 2-8-02; published 1-9-02 [FR 02-00481]
Pennsylvania; comments due by 2-25-02; published 1-25-02 [FR 02-01945]

JUSTICE DEPARTMENT
Interstate Transportation of Dangerous Criminals Act; implementation:
Private companies that transport violent prisoners; minimum safety and security standards; comments due by 2-15-02; published 12-17-01 [FR 01-30937]

NATIONAL AERONAUTICS AND SPACE ADMINISTRATION
Acquisition regulations:
Safety and health; comments due by 2-11-02; published 12-13-01 [FR 01-30772]
Federal Acquisition Regulation (FAR):
Hazardous material safety data; comments due by 3-5-02; published 1-4-02 [FR 02-00117]

NATIONAL CREDIT UNION ADMINISTRATION
Credit unions:
Organization and operations—
Chartering and field of membership policy; comments due by 2-19-02; published 12-20-01 [FR 01-31290]

NATIONAL CREDIT UNION ADMINISTRATION
Credit unions:
Organization and operations—
Reasonable retirement benefits for employees and officers; comments due by 2-19-02; published 12-20-01 [FR 01-31287]

INTERIOR DEPARTMENT
National Indian Gaming Commission
Management contract provisions:
Minimum internal control standards; comments due by 2-25-02; published 12-26-01 [FR 01-30788]
Minimum internal control standards; correction; comments due by 2-25-02; published 1-24-02 [FR C1-30788]

NUCLEAR REGULATORY COMMISSION
Production and utilization facilities; domestic licensing:
Light water reactor electric generating plants; fire protection; comments due by 2-4-02; published 12-20-01 [FR 01-31217]

PERSONNEL MANAGEMENT OFFICE
Employment:
Agency vacancy announcements; reasonable accommodation statement requirement; comments due by 2-11-02; published 12-11-01 [FR 01-30531]

PERSONNEL MANAGEMENT OFFICE
Health benefits, Federal employees:
Health care providers; debarments and suspensions; administrative sanctions; comments due by 2-11-02; published 12-12-01 [FR 01-30529]

PERSONNEL MANAGEMENT OFFICE
Pay administration:
Administrative appeals judge positions; new pay system; comments due by 2-11-02; published 12-11-01 [FR 01-30530]

PERSONNEL MANAGEMENT OFFICE
Prevailing rate systems; comments due by 2-22-02;

published 1-23-02 [FR 02-01605]

POSTAL SERVICE

Domestic Mail Manual:

DBMC rate standard mail and package services machinable parcels; Buffalo and Pittsburgh postal facilities realignment; comments due by 2-19-02; published 1-17-02 [FR 02-01272]

Free matter for blind and other physically handicapped persons; eligibility standards; comments due by 2-4-02; published 1-3-02 [FR 02-00078]

Domestic Mail Manual;

Rate, fee, and classification changes; comments due by 3-1-02; published 1-30-02 [FR 02-02177]

SECURITIES AND EXCHANGE COMMISSION

Securities:

Qualified purchaser; definition; comments due by 2-25-02; published 12-27-01 [FR 01-31742]

SMALL BUSINESS ADMINISTRATION

HUBZone program:

Miscellaneous amendments; comments due by 2-27-02; published 1-28-02 [FR 02-01834]

SOCIAL SECURITY ADMINISTRATION

Social security benefits:

Federal old age, survivors, and disability insurance—

Skin disorders; medical criteria; impairments listing; comments due by 2-8-02; published 12-10-01 [FR 01-30431]

TRANSPORTATION DEPARTMENT

Coast Guard

Civil and criminal penalty proceedings:

Marine violation notices; response options; comments due by 2-8-02; published 12-10-01 [FR 01-30480]

Drawbridge operations:

Illinois; comments due by 2-25-02; published 12-27-01 [FR 01-31842]

Outer Continental Shelf activities:

Gulf of Mexico; petroleum and gas production facilities; safety zones; comments due by 2-8-02; published 12-10-01 [FR 01-30481]

Ports and waterways safety:

Boston Harbor et al., MA; safety and security zones; comments due by 2-28-02; published 1-18-02 [FR 02-01358]

Kennebec River, Bath, Maine; Bath Iron Works; safety zone; comments due by 2-25-02; published 12-26-01 [FR 01-31658]

Ouzinkie Harbor, AK; safety zone; comments due by 2-21-02; published 1-31-02 [FR 02-02276]

Savannah River, GA; regulated navigation area; comments due by 2-12-02; published 12-14-01 [FR 01-30840]

TRANSPORTATION DEPARTMENT

Airline service quality performance reports:

Causes of airline delays and cancellations; reporting requirements modification; comments due by 2-25-02; published 12-27-01 [FR 01-31725]

TRANSPORTATION DEPARTMENT

Federal Aviation Administration

Airworthiness directives:

Agusta S.p.A.; comments due by 2-8-02; published 12-10-01 [FR 01-30211]

TRANSPORTATION DEPARTMENT

Federal Aviation Administration

Airworthiness directives:

Air Tractor, Inc.; comments due by 2-15-02; published 12-27-01 [FR 01-31555]

Boeing; comments due by 2-11-02; published 12-26-01 [FR 01-31558]

TRANSPORTATION DEPARTMENT

Federal Aviation Administration

Airworthiness directives:

Boeing; comments due by 3-4-02; published 1-3-02 [FR 02-00148]

TRANSPORTATION DEPARTMENT

Federal Aviation Administration

Airworthiness directives:

Bombardier; comments due by 2-7-02; published 1-8-02 [FR 02-00088]

TRANSPORTATION DEPARTMENT

Federal Aviation Administration

Airworthiness directives:

Cessna; comments due by 2-11-02; published 12-17-01 [FR 01-30954]

TRANSPORTATION DEPARTMENT

Federal Aviation Administration

Airworthiness directives:

CFE Co.; comments due by 2-19-02; published 12-21-01 [FR 01-31326]

TRANSPORTATION DEPARTMENT

Federal Aviation Administration

Airworthiness directives:

Dassault; comments due by 2-6-02; published 1-2-02 [FR 01-32194]

TRANSPORTATION DEPARTMENT

Federal Aviation Administration

Airworthiness directives:

Dornier; comments due by 3-1-02; published 1-30-02 [FR 02-01821]

TRANSPORTATION DEPARTMENT

Federal Aviation Administration

Airworthiness directives:

Fairchild; comments due by 2-19-02; published 12-27-01 [FR 01-31554]

TRANSPORTATION DEPARTMENT

Federal Aviation Administration

Airworthiness directives:

Hamilton Sundstrand; comments due by 2-26-02; published 12-28-01 [FR 01-31328]

TRANSPORTATION DEPARTMENT

Federal Aviation Administration

Airworthiness directives:

Israel Aircraft Industries, Ltd.; comments due by 2-14-02; published 1-15-02 [FR 02-00799]

TRANSPORTATION DEPARTMENT

Federal Aviation Administration

Airworthiness directives:

McDonnell Douglas; comments due by 2-4-02; published 12-5-01 [FR 01-30084]

TRANSPORTATION DEPARTMENT

Federal Aviation Administration

Airworthiness directives:

McDonnell Douglas; comments due by 2-19-02; published 1-4-02 [FR 02-00209]

MD Helicopters Inc.; comments due by 2-15-02; published 12-17-01 [FR 01-31042]

MD Helicopters, Inc.; comments due by 2-25-02; published 12-27-01 [FR 01-31556]

Pilatus Aircraft Ltd.; comments due by 2-19-02; published 1-2-02 [FR 01-32151]

Pratt & Whitney; comments due by 2-14-02; published 1-15-02 [FR 02-00905]

TRANSPORTATION DEPARTMENT

Federal Aviation Administration

Airworthiness directives:

Pratt & Whitney; comments due by 3-4-02; published 1-2-02 [FR 01-31296]

TRANSPORTATION DEPARTMENT

Federal Aviation Administration

Airworthiness directives:

Pratt & Whitney; comments due by 3-8-02; published 1-7-02 [FR 02-00304]

TRANSPORTATION DEPARTMENT

Federal Aviation Administration

Airworthiness directives:

Raytheon; comments due by 2-4-02; published 12-6-01 [FR 01-30083]

TRANSPORTATION DEPARTMENT

Federal Aviation Administration

Airworthiness directives:

Rolls-Royce Corp.; comments due by 2-4-02; published 12-4-01 [FR 01-29950]

TRANSPORTATION DEPARTMENT

Federal Aviation Administration

Airworthiness directives:

Rolls-Royce plc; comments due by 2-4-02; published 12-4-01 [FR 01-29949]

TRANSPORTATION DEPARTMENT

Federal Aviation Administration

Airworthiness directives:

Rolls-Royce plc.; comments due by 3-1-02; published 12-31-01 [FR 01-31699]

TRANSPORTATION DEPARTMENT

Federal Aviation Administration

Airworthiness directives:

Sikorsky; comments due by 2-19-02; published 12-18-01 [FR 01-31041]

TRANSPORTATION DEPARTMENT

Federal Aviation Administration

Airworthiness directives:

Sikorsky; comments due by 2-19-02; published 12-20-01 [FR 01-31039]

TRANSPORTATION DEPARTMENT

Federal Aviation Administration

Airworthiness directives:

Turbomeca S.A.; comments due by 3-8-02; published 1-7-02 [FR 02-00199]

TRANSPORTATION DEPARTMENT

Federal Aviation Administration

Airworthiness standards:

Special conditions—

Avions Marcel Dassault-Breguet Aviation Model Falcon 10 airplanes; comments due by 2-21-02; published 1-22-02 [FR 02-01507]

TRANSPORTATION DEPARTMENT

Federal Aviation Administration

Airworthiness standards:

Special conditions—

Dassault Aviation Model Mystere-Falcon 200, 20-C5, 20-D5, 10-E5, and 20-F5 airplanes; comments due by 2-4-02; published 1-4-02 [FR 02-00247]

Eclipse Aviation Corp. Model 500 airplane; comments due by 2-28-02; published 1-29-02 [FR 02-02143]

Fairchild Dornier GmbH Model 728-100 airplane; comments due by 3-8-02; published 1-22-02 [FR 02-01506]

Class B airspace; comments due by 3-1-02; published 12-31-01 [FR 01-32007]

Class C airspace; comments due by 3-8-02; published 1-22-02 [FR 02-01373]

Class D airspace; comments due by 2-17-02; published 1-16-02 [FR 02-01007]

Class D airspace; correction; comments due by 2-17-02; published 1-23-02 [FR C2-01007]

Class D and Class E airspace; comments due by 2-11-02; published 1-7-02 [FR 02-00252]

Class D and Class E4 airspace; comments due by 2-21-02; published 1-22-02 [FR 02-01509]

Class E airspace; comments due by 2-4-02; published 1-4-02 [FR 02-00165]

Class E airspace; correction; comments due by 2-11-02; published 1-23-02 [FR C2-00248]

TRANSPORTATION DEPARTMENT

Federal Railroad Administration

Alcohol and drug use control:

Random testing and other requirements application to employees of foreign railroad based outside U.S. and perform train or dispatching service in U.S.; comments due by 2-11-02; published 12-11-01 [FR 01-30184]

TRANSPORTATION DEPARTMENT

Federal Railroad Administration

Locomotive engineers; qualification and certification:

Miscellaneous amendments; comments due by 3-4-02; published 1-2-02 [FR 01-32049]

TRANSPORTATION DEPARTMENT

Federal Railroad Administration

Railroad workplace safety:

Body belts use as components of personal fall arrest systems prohibited; and railroad bridge workers; comments due by 3-1-02; published 1-15-02 [FR 02-00723]

TRANSPORTATION DEPARTMENT

Federal Railroad Administration

U.S. rail operations; U.S. locational requirement for dispatching; comments due by 2-11-02; published 12-11-01 [FR 01-30185]

TRANSPORTATION DEPARTMENT

National Highway Traffic Safety Administration

Fuel economy standards:

Light trucks; 2004 model year; comments due by 2-25-02; published 1-24-02 [FR 02-01675]

Motor vehicle safety standards:

Defect and noncompliance—

Manufacturer's remedy program; acceleration; comments due by 2-11-02; published 12-11-01 [FR 01-30488]

Reimbursement prior to recall; comments due by 2-11-02; published 12-11-01 [FR 01-30487]

Defect and noncompliance reports—

Recalled tires disposition; comments due by 2-19-02; published 12-18-01 [FR 01-30998]

Practice and procedure:

Defects; retention of records, early warning reporting requirements; comments due by 2-4-02; published 12-21-01 [FR 01-31382]

Transportation Recall Enhancement, Accountability, and Documentation (TREAD) Act; implementation:

Tire safety information; comments due by 2-19-02; published 12-19-01 [FR 01-30989]

TRANSPORTATION DEPARTMENT

Research and Special Programs Administration

Hazardous materials:

Hazardous materials transportation—

Cargo tank motor vehicles; construction and maintenance requirements; comments due by 2-4-02; published 12-4-01 [FR 01-28117]

TRANSPORTATION DEPARTMENT

Saint Lawrence Seaway Development Corporation

Seaway regulations and rules:

Ballast water; Great Lakes shipping industry codes compliance; comments due by 2-25-02; published 1-24-02 [FR 02-01752]

TRANSPORTATION DEPARTMENT

Transportation Security Administration

Passenger civil aviation security service fees; imposition and collection; comments due by 3-1-02; published 12-31-01 [FR 01-32254]

TREASURY DEPARTMENT

Alcohol, Tobacco and Firearms Bureau

Firearms:

Commerce in explosives—

Arson and explosives; national repository for information; comments due by 2-13-02; published 11-15-01 [FR 01-28597]

TREASURY DEPARTMENT

Customs Service

Air commerce:

Passenger flights in foreign air transportation to the United States; passenger and crew manifests requirements; comments due by 3-1-02; published 12-31-01 [FR 01-32034]

TREASURY DEPARTMENT

Customs Service

Articles conditionally free, subject to reduced rates, etc.:

Wool products; limited refund of duties; comments due by 2-7-02; published 1-23-02 [FR 02-01664]

TREASURY DEPARTMENT

Customs Service

Merchandise entry:

Single entry for split shipments; comments due by 2-14-02; published 1-23-02 [FR 02-01602]

TREASURY DEPARTMENT

Internal Revenue Service

Excise taxes:

Liability for insurance premium; comments due by 2-26-02; published 1-7-02 [FR 02-00325]

Income taxes, etc.:

Statutory stock options; Federal Insurance Contributions Act, Federal Unemployment Tax Act, and income tax collection at source; application; comments due by 2-14-02; published 11-14-01 [FR 01-28535]

Income Taxes:

Consolidated return regulations—

Non-applicability of section 357(c) in consolidated group; comments due by 2-28-02; published 11-14-01 [FR 01-28409]

Income taxes:

Corporate statutory mergers and consolidations; definition and public hearing; comments due by 2-20-02; published 11-15-01 [FR 01-28670]

Credit for increasing research activities; comments due by 3-6-02; published 12-26-01 [FR 01-31007]

New markets tax credit; cross-reference;

comments due by 2-25-02; published 12-26-01 [FR 01-31529]
Procedure and administration:
Returns and return information disclosure by other agencies; cross-reference; comments due by 2-14-02; published 12-13-01 [FR 01-30620]

TREASURY DEPARTMENT

Counter money laundering requirements:
Bank Secrecy Act; implementation—
Foreign shell banks, correspondent accounts; and foreign banks, correspondent accounts recordkeeping and termination; comments due by 2-11-02; published 12-28-01 [FR 01-31849]
Currency and foreign transactions; financial reporting and recordkeeping requirements:
Bank Secrecy Act; implementation—
Nonfinancial trades or businesses; reporting requirements; comments due by 3-1-02; published 12-31-01 [FR 01-31847]
Bank Secrecy Act; regulations—
Suspicious transactions; reporting by brokers and dealers; comments due by 3-1-02; published 12-31-01 [FR 01-31850]

VETERANS AFFAIRS DEPARTMENT

Adjudication; pensions, compensation, dependency, etc.:
Filipino veterans' benefits improvements; comments due by 2-25-02; published 12-27-01 [FR 01-31828]

VETERANS AFFAIRS DEPARTMENT

Adjudication; pensions, compensation, dependency, etc.:
Independent medical opinions; comments due by 2-11-02; published 12-12-01 [FR 01-30612]

VETERANS AFFAIRS DEPARTMENT

Medical benefits:
Inpatient hospital care and outpatient medical care; copayments; comments due by 2-4-02; published 12-6-01 [FR 01-30182]

LIST OF PUBLIC LAWS

Note: The List of Public Laws for the first session of the 107th Congress has been completed. It will resume when bills are enacted into public law during the next session of Congress. A cumulative List of Public Laws for the first session of the 107th Congress will appear in the issue of February 1, 2002.

Last List January 28, 2002

Public Laws Electronic Notification Service (PENS)

PENS is a free electronic mail notification service of newly enacted public laws. To subscribe, go to *http://hydra.gsa.gov/archives/publaws-l.html* or send E-mail to **listserv@listserv.gsa.gov** with the following text message:

SUBSCRIBE PUBLAWS-L Your Name.

Note: PENS will resume service when bills are enacted into law during the next session of Congress. This service is strictly for E-mail notification of new laws. The text of laws is not available through this service. **PENS** cannot respond to specific inquiries sent to this address.