AUTHENTICATED
U.S. GOVERNMENT
INFORMATION
GPO

Federal Register

2–20–02 Wednesday
Vol. 67 No. 34 Feb. 20, 2002
Pages 7583–7940

The **FEDERAL REGISTER** is published daily, Monday through Friday, except official holidays, by the Office of the Federal Register, National Archives and Records Administration, Washington, DC 20408, under the Federal Register Act (44 U.S.C. Ch. 15) and the regulations of the Administrative Committee of the Federal Register (1 CFR Ch. I). The Superintendent of Documents, U.S. Government Printing Office, Washington, DC 20402 is the exclusive distributor of the official edition.

The **Federal Register** provides a uniform system for making available to the public regulations and legal notices issued by Federal agencies. These include Presidential proclamations and Executive Orders, Federal agency documents having general applicability and legal effect, documents required to be published by act of Congress, and other Federal agency documents of public interest.

Documents are on file for public inspection in the Office of the Federal Register the day before they are published, unless the issuing agency requests earlier filing. For a list of documents currently on file for public inspection, see http://www.nara.gov/fedreg.

The seal of the National Archives and Records Administration authenticates the Federal Register as the official serial publication established under the Federal Register Act. Under 44 U.S.C. 1507, the contents of the **Federal Register** shall be judicially noticed.

The **Federal Register** is published in paper and on 24x microfiche. It is also available online at no charge as one of the databases on GPO Access, a service of the U.S. Government Printing Office.

The online edition of the **Federal Register** is issued under the authority of the Administrative Committee of the Federal Register as the official legal equivalent of the paper and microfiche editions (44 U.S.C. 4101 and 1 CFR 5.10). It is updated by 6 a.m. each day the **Federal Register** is published and it includes both text and graphics from Volume 59, Number 1 (January 2, 1994) forward.

GPO Access users can choose to retrieve online **Federal Register** documents as TEXT (ASCII text, graphics omitted), PDF (Adobe Portable Document Format, including full text and all graphics), or SUMMARY (abbreviated text) files. Users should carefully check retrieved material to ensure that documents were properly downloaded.

On the World Wide Web, connect to the **Federal Register** at http://www.access.gpo.gov/nara. Those without World Wide Web access can also connect with a local WAIS client, by Telnet to swais.access.gpo.gov, or by dialing (202) 512–1661 with a computer and modem. When using Telnet or modem, type swais, then log in as guest with no password.

For more information about GPO Access, contact the GPO Access User Support Team by E-mail at gpoaccess@gpo.gov; by fax at (202) 512–1262; or call (202) 512–1530 or 1–888–293–6498 (toll free) between 7 a.m. and 5 p.m. Eastern time, Monday–Friday, except Federal holidays.

The annual subscription price for the **Federal Register** paper edition is $699, or $764 for a combined **Federal Register, Federal Register** Index and List of CFR Sections Affected (LSA) subscription; the microfiche edition of the **Federal Register** including the **Federal Register** Index and LSA is $264. Six month subscriptions are available for one-half the annual rate. The charge for individual copies in paper form is $10.00 for each issue, or $10.00 for each group of pages as actually bound; or $2.00 for each issue in microfiche form. All prices include regular domestic postage and handling. International customers please add 25% for foreign handling. Remit check or money order, made payable to the Superintendent of Documents, or charge to your GPO Deposit Account, VISA, MasterCard or Discover. Mail to: New Orders, Superintendent of Documents, P.O. Box 371954, Pittsburgh, PA 15250–7954.

There are no restrictions on the republication of material appearing in the **Federal Register.**

How To Cite This Publication: Use the volume number and the page number. Example: 67 FR 12345.

SUBSCRIPTIONS AND COPIES

PUBLIC

Subscriptions:

Paper or fiche	**202–512–1800**
Assistance with public subscriptions	**202–512–1806**

General online information **202–512–1530; 1–888–293–6498**

Single copies/back copies:

Paper or fiche	**202–512–1800**
Assistance with public single copies	**1–866–512–1800 (Toll-Free)**

FEDERAL AGENCIES

Subscriptions:

Paper or fiche	**202–523–5243**
Assistance with Federal agency subscriptions	**202–523–5243**

What's NEW!

Federal Register Table of Contents via e-mail

Subscribe to FEDREGTOC, to receive the **Federal Register** Table of Contents in your e-mail every day.

If you get the HTML version, you can click directly to any document in the issue.

To subscribe, go to **http://listserv.access.gpo.gov** and select:

Online mailing list archives
FEDREGTOC-L
Join or leave the list

Then follow the instructions.

Printed on recycled paper.

Contents

Federal Register

Vol. 67, No. 34

Wednesday, February 20, 2002

Agency for International Development
NOTICES
Agency information collection activities:
Proposed collection; comment request, 7666

Agriculture Department
See Animal and Plant Health Inspection Service
See Forest Service

Air Force Department
NOTICES
Environmental statements; availability, etc.:
Hardwood Air-to-Surface Gunnery Range, WI; land area expansion, 7673

Animal and Plant Health Inspection Service
RULES
Livestock and poultry disease control:
Bovine tuberculosis; indemnity payment for destroyed animals, 7583–7592

Centers for Disease Control and Prevention
NOTICES
Committees; establishment, renewal, termination, etc.:
Clinical Laboratory Improvement Advisory Committee, 7699
Meetings:
National Institute for Occupational Safety and Health—
Scientific Counselors Board, 7699
Vessel Sanitation Program—
Current status and experience with program operations, 7699–7700

Chemical Safety and Hazard Investigation Board
NOTICES
Meetings; Sunshine Act, 7668

Coast Guard
RULES
Ports and waterways safety:
San Francisco Bay, CA—
Security zones, 7611–7613
NOTICES
Agency information collection activities:
Submission for OMB review; comment request, 7734–7735
Meetings:
Towing Safety Advisory Committee, 7735–7736

Commerce Department
See International Trade Administration
See National Institute of Standards and Technology
See National Oceanic and Atmospheric Administration

Defense Department
See Air Force Department

Drug Enforcement Administration
NOTICES
Applications, hearings, determinations, etc.:
Cedarburg Pharmaceutical LLC, 7710
Roche Diagnostics Corp., 7710–7711

Education Department
NOTICES
Meetings:
President's Advisory Commission on Educational Excellence for Hispanic Americans, 7673

Energy Department
See Federal Energy Regulatory Commission
NOTICES
Electricity export and import authorizations, permits, etc.:
Maclaren Energy Inc., 7673–7674
Floodplain and wetlands protection; environmental review determinations; availability, etc.:
Los Alamos National Laboratory, NM; Omega West Reactor vessel and ancillary structures disposition, 7674–7675
Grants and cooperative agreements; availability, etc.:
Air quality and produced water management in oil and gas exploration and production; focused research, 7675–7676
Million Solar Roofs Initiative, 7676–7677
Renewable energy development on Tribal lands, 7677–7678
Snowmass 2002 Fusion Energy Sciences Summer Study; correction, 7678
Meetings:
Environmental Management Site-Specific Advisory Board—
Rocky Flats, CO, 7678

Environmental Protection Agency
RULES
Superfund program:
National oil and hazardous substances contingency plan—
National priorities list update, 7614–7617
PROPOSED RULES
Acquisition regulations:
Contractor performance evaluations, 7657–7660
Superfund program:
National oil and hazardous substances contingency plan—
National priorities list update, 7657
NOTICES
Air pollution control:
State operating permits programs—
Various States, 7687
Pesticides; experimental use permits, etc.:
Monsanto Co., 7687–7688
Mycogen Seeds et al., 7688–7689

Executive Office of the President
See Trade Representative, Office of United States

Federal Aviation Administration
RULES
Airworthiness directives:
Bell, 7594–7604
Bombardier, 7593–7594, 7604–7605
Dornier, 7607–7609
Honeywell, 7609–7611
Short Brothers, 7605–7607

Federal Communications Commission
NOTICES
Agency information collection activities:
Reporting and recordkeeping requirements, 7689–7691

Federal Energy Regulatory Commission
NOTICES
Electric rate and corporate regulation filings:
Cinergy Services, Inc., et al., 7681–7683
Environmental statements; notice of intent:
CMS Trunkline LNG Co., LLC, 7683–7685
Hydroelectric applications, 7685–7687
Applications, hearings, determinations, etc.:
Colorado Interstate Gas Co., 7679
Maclaren Energy, Inc., 7679
Mississippi River Transmission Corp., 7679
Portland Natural Gas Transmission System, 7680
Public Utility District No. 1 of Snohomish County, WA, 7680
Reliant Energy Gas Transmission Co., 7680–7681

Federal Maritime Commission
NOTICES
Agreements filed, etc., 7691
Ocean transportation intermediary licenses:
Future Maritime Group Inc. et al., 7691–7692

Federal Reserve System
NOTICES
Banks and bank holding companies:
Formations, acquisitions, and mergers, 7692

Fish and Wildlife Service
NOTICES
Meetings:
Klamath Fisheries Management Council, 7706–7707

Food and Drug Administration
PROPOSED RULES
Medical devices:
Dental devices—
Encapsulated amalgam, amalgam alloy, and dental mercury; classification and special controls, 7620–7630
NOTICES
Animal drugs, feeds, and related products:
Enrofloxacin for poultry; proposal to withdraw approval; hearing, 7700–7701
Human drugs:
Drug products withdrawn from sale for reasons other than safety or effectiveness—
Azathioprine; 25-milligram tablet, 7701–7702
New drug applications—
Mylan Pharmaceuticals, Inc., et al.; approval withdrawn, 7702–7703
Reports and guidance documents; availability, etc.:
Encapsulated amalgam, amalgam alloy, and dental mercury labeling; special controls, 7703–7704
Exercise-induced bronchospasm (EIB); development of drugs to prevent EIB, 7704

Forest Service
NOTICES
Environmental statements; notice of intent:
Helena National Forest, MT, 7666–7667
Meetings:
Resource Advisory Committees—
Deschutes and Ochoco National Forests, 7667
Hood/Willamette, 7667–7668

General Services Administration
NOTICES
Reports and guidance documents; availability, etc.:
National origin discrimination as it affects limited English proficient persons; prohibition; policy guidance to Federal financial assistance recipients, 7692–7698

Health and Human Services Department
See Centers for Disease Control and Prevention
See Food and Drug Administration
See Health Resources and Services Administration
See Substance Abuse and Mental Health Services Administration
NOTICES
Meetings:
Regulatory Reform Advisory Committee, Secretary's, 7698

Health Resources and Services Administration
NOTICES
Medical professional shortage area designations; primary medical care, mental health, and dental health; lists, 7739–7919

Housing and Urban Development Department
NOTICES
Agency information collection activities:
Proposed collection; comment request, 7706
Grants and cooperative agreements; availability, etc.:
Community development and affordable housing; capacity building, 7921–7924

Interior Department
See Fish and Wildlife Service
See Land Management Bureau
See Reclamation Bureau

Internal Revenue Service
PROPOSED RULES
Income taxes:
Catch-up contributions for individuals age 50 or over
Hearing date change and extension of comment period, 7656
Golden parachute payments, 7630–7656
NOTICES
Meetings:
Citizen Advocacy Panels—
Florida District, 7736–7737

International Trade Administration
NOTICES
Antidumping:
Stainless steel sheet and strip in coils from—
Germany, 7668–7670

Justice Department
See Drug Enforcement Administration

Land Management Bureau
NOTICES
Meetings:
Resource Advisory Councils—
Mojave Southern Great Basin, 7707
Southwest and Northwest Colorado, 7707

National Aeronautics and Space Administration
RULES
Acquisition regulations:
Contractors; major breach of safety or security, 7617–7618
Incremental funding and deobligations under contracts; limitation, 7618–7619

National Institute of Standards and Technology
NOTICES
Meetings:
Advanced Technology Visiting Committee, 7670–7671
Computer System Security and Privacy Advisory Board, 7671
International Code Council, 7671–7672

National Oceanic and Atmospheric Administration
RULES
Practice and procedure:
Information disclosure and employee testimony in litigation not involving U.S.; CFR part removed, 7611
PROPOSED RULES
Endangered and threatened species:
Critical habitat designations—
Northern right whales in Pacific, 7660–7665

Office of United States Trade Representative
See Trade Representative, Office of United States

Overseas Private Investment Corporation
NOTICES
Agency information collection activities:
Submission for OMB review; comment request, 7711

Public Health Service
See Centers for Disease Control and Prevention
See Food and Drug Administration
See Health Resources and Services Administration
See Substance Abuse and Mental Health Services Administration

Railroad Retirement Board
NOTICES
Agency information collection activities:
Proposed collection; comment request, 7711–7712

Reclamation Bureau
NOTICES
Power rate adjustments:
Pick-Sloan Missouri Basin Program, 7707–7710

Securities and Exchange Commission
NOTICES
Investment Company Act of 1940:
Approval order applications—
IDS Life Insurance Co. et al., 7712–7720
Exemption applications—
DFA Investment Dimensions Group Inc. et al., 7720–7727
Securities:
Suspension of trading—
Eagle Building Technologies, Inc., 7727
Self-regulatory organizations; proposed rule changes:
Depository Trust Co., 7727–7728
Philadelphia Stock Exchange, Inc., 7728–7731

Small Business Administration
NOTICES
Meetings:
Regulatory Fairness Boards—
Region VI; Public Roundtable, 7731–7732

Substance Abuse and Mental Health Services Administration
NOTICES
Grants and cooperative agreements; availability, etc.:
Mental Health Services Center—
Partnerships for Youth Transition, 7704–7706

Tennessee Valley Authority
NOTICES
Environmental statements; notice of intent:
Tennessee; electric generation baseload capacity addition, 7732–7733

Thrift Supervision Office
NOTICES
Applications, hearings, determinations, etc.:
Mt. Troy Savings Bank, FSB, 7737
Willow Grove Bancorp, Inc., 7737

Trade Representative, Office of United States
NOTICES
African Growth and Opportunity Act; implementation:
Mozambique; benefits eligibility determination, 7733–7734

Transportation Department
See Coast Guard
See Federal Aviation Administration
See Transportation Security Administration

Transportation Security Administration
RULES
Aviation security infrastructure fees; imposition, 7925–7938
NOTICES
Aviation and Transportation Security Act:
Civil aviation security functions and responsibilities transferred from Federal Aviation Administration, 7938–7940

Treasury Department
See Internal Revenue Service
See Thrift Supervision Office
NOTICES
Agency information collection activities:
Proposed collection; comment request, 7736

Separate Parts In This Issue

Part II
Health and Human Services Department, Health Resources and Services Administration, 7739–7919

Part III
Housing and Urban Development Department, 7921–7924

Part IV
Transportation Department, Transportation Security Administration, 7925–7940

FederalRegister / Vol.67

Consult the Reader Aids section at the end of this issue for phone numbers, online resources, finding aids, reminders, and notice of recently enacted public laws.

To subscribe to the Federal Register Table of Contents LISTSERV electronic mailing list, go to http://listserv.access.gpo.gov and select Online mailing list archives, FEDREGTOC-L, Join or leave the list (or change settings); then follow the instructions.

CFR PARTS AFFECTED IN THIS ISSUE

A cumulative list of the parts affected this month can be found in the Reader Aids section at the end of this issue.

9 CFR
50 7583
77 7583

14 CFR
39 (6 documents) ... 7593, 7594, 7604, 7605, 7607, 7609

15 CFR
909 7611

21 CFR
Proposed Rules:
872 7620

26 CFR
Proposed Rules:
1 (2 documents) 7630, 7656

33 CFR
165 7611

40 CFR
300 7614
Proposed Rules:
300 7657

48 CFR
1816 7617
1832 7618
1852 7617
Proposed Rules:
1509 7657
1552 7657

49 CFR
1511 7926

50 CFR
Proposed Rules:
226 7660

Rules and Regulations

Federal Register
Vol. 67, No. 34
Wednesday, February 20, 2002

This section of the FEDERAL REGISTER contains regulatory documents having general applicability and legal effect, most of which are keyed to and codified in the Code of Federal Regulations, which is published under 50 titles pursuant to 44 U.S.C. 1510.

The Code of Federal Regulations is sold by the Superintendent of Documents. Prices of new books are listed in the first FEDERAL REGISTER issue of each week.

DEPARTMENT OF AGRICULTURE

Animal and Plant Health Inspection Service

9 CFR Parts 50 and 77

[Docket No. 00–106–1]

RIN 0579–AB29

Animals Destroyed Because of Tuberculosis; Payment of Indemnity

AGENCY: Animal and Plant Health Inspection Service, USDA.

ACTION: Interim rule and request for comments.

SUMMARY: We are amending the regulations regarding the payment of indemnity for animals destroyed because of bovine tuberculosis to provide that the Animal and Plant Health Inspection Service will pay owners of the animals an indemnity equal to the difference between the net salvage received and the appraised value of the animals destroyed, up to $3,000 per animal. This action is necessary to further tuberculosis eradication efforts and to protect livestock not infected with bovine tuberculosis from the disease.

DATES: This interim rule was effective February 14, 2002. We will consider all comments we receive that are postmarked, delivered, or e-mailed by April 22, 2002.

ADDRESSES: You may submit comments by postal mail/commercial delivery or by e-mail. If you use postal mail/commercial delivery, please send four copies of your comment (an original and three copies) to: Docket No. 00–106–1, Regulatory Analysis and Development, PPD, APHIS, Station 3C71, 4700 River Road Unit 118, Riverdale, MD 20737–1238. Please state that your comment refers to Docket No. 00–106–1. If you use e-mail, address your comment to regulations@aphis.usda.gov. Your comment must be contained in the body of your message; do not send attached files. Please include your name and address in your message and ''Docket No. 00–106–1'' on the subject line.

You may read any comments that we receive on this docket in our reading room. The reading room is located in room 1141 of the USDA South Building, 14th Street and Independence Avenue SW., Washington, DC. Normal reading room hours are 8 a.m. to 4:30 p.m., Monday through Friday, except holidays. To be sure someone is there to help you, please call (202) 690–2817 before coming.

APHIS documents published in the **Federal Register**, and related information, including the names of organizations and individuals who have commented on APHIS dockets, are available on the Internet at http://www.aphis.usda.gov/ppd/rad/webrepor.html.

FOR FURTHER INFORMATION CONTACT: Dr. Joseph Van Tiem, Senior Staff Veterinarian, National Animal Health Programs, VS, APHIS, 4700 River Road Unit 43, Riverdale, MD 20737–1231; (301) 734–7716.

SUPPLEMENTARY INFORMATION:

Background

Bovine tuberculosis (tuberculosis) is a contagious, infectious, and communicable disease caused by *Mycobacterium bovis.* It affects cattle, bison, deer, elk, goats, and other warm-blooded species, including humans. Tuberculosis in infected animals and humans manifests itself in lesions of the lung, bone, and other body parts, causes weight loss and general debilitation, and can be fatal. At the beginning of the past century, tuberculosis caused more losses of livestock than all other livestock diseases combined. This prompted the establishment of the National Cooperative State/Federal Bovine Tuberculosis Eradication Program for bovine tuberculosis in livestock. Through this program, the Animal and Plant Health Inspection Service (APHIS) works cooperatively with the national livestock industry and State animal health agencies to eradicate tuberculosis from domestic livestock in the United States and prevent its recurrence.

Federal regulations implementing this program are contained in 9 CFR part 77, ''Tuberculosis,'' and in the ''Uniform Methods and Rules—Bovine Tuberculosis Eradication'' (UMR), January 22, 1999, edition, which is incorporated by reference into the regulations in part 77. Additionally, the regulations in 9 CFR part 50 (referred to below as the regulations) provide for the payment of indemnity to owners of certain animals destroyed because of tuberculosis, in order to encourage destruction of animals that are infected with, or at risk of being infected with, the disease.

Use of the Terms ''Affected'' and ''Infected''

Prior to the effective date of this interim rule, when our intent in part 50 was to refer to individual animals infected with tuberculosis, we referred to the animals as being ''affected'' with the disease. However, such usage is inconsistent with the tuberculosis regulations in part 77, which refer to infected animals as ''infected.'' Additionally, it is inconsistent with our general policy of using the term ''affected'' to mean animals that are either infected with or exposed to a disease. Therefore, in this interim rule, wherever our intent is to refer in part 50 only to animals infected with tuberculosis, we are replacing the term ''affected with'' with ''infected with.''

Making such a change, however, creates the situation of our using two different terms in this explanatory **SUPPLEMENTARY INFORMATION** to mean the same thing—i.e., referring to individual animals affected with tuberculosis when describing the content of the regulations prior to this interim rule and referring to individual animals infected with tuberculosis when describing the content of this interim rule. To make clear that both terms refer to the same category of animals, when we refer in this Supplementary Information to the description used prior to this interim rule of individual animals ''affected'' with tuberculosis, we follow that reference with the term ''infected'' in parentheses.

Throughout part 50, there are also references to herds that contain infected animals. In some cases in the regulations, these herds are referred to as being ''infected'' with tuberculosis; in other cases the herds are referred to as being ''affected'' with the disease. In such cases where reference is made to a herd of animals that includes at least

one infected animal, but in which other animals in the herd are not necessarily known to be infected, it is more accurate to refer to the herd as ''affected,'' to indicate that it contains at least one infected animal and also other animals that have likely been exposed to tuberculosis. Therefore, in this interim rule, when we refer to a herd that contains at least one infected animal, we refer to the herd as being ''affected'' with tuberculosis.

Previous Indemnity Limits

Prior to the effective date of this interim rule, the regulations in § 50.3 set a maximum dollar figure on the amount that could be paid by APHIS for an animal destroyed because of tuberculosis. When these amounts were established, they approximated the fair market value of the animals, minus any salvage value that could be received for the animals. The limits per animal were as follows:

- $750 for cattle, bison, and captive cervids affected (infected) with tuberculosis;
- $450 for cattle, bison, and captive cervids exposed to tuberculosis;
- $450 for cattle, bison, and captive cervids classified as tuberculosis suspect; and
- $200 for swine exposed to tuberculosis.

For the most part, however, these amounts were set in 1980 and, in recent years, even when added to the amount received by an owner for salvage, they often came to less than the appraised value of the animals. In this interim rule, we are updating the amount that can be paid for animals destroyed because of tuberculosis to once again allow for payment for the appraised value of the animals, minus salvage value.

In recent years, the disparity between the amount that APHIS could pay for an animal destroyed because of tuberculosis and its appraised value has made some owners reluctant to immediately remove a suspect animal from a herd so that confirmation could be made at slaughter of its tuberculosis status. This has sometimes hindered timely detection and traceback of tuberculous animals, because if a suspect animal were sent to slaughter immediately, and was confirmed there as being infected with tuberculosis, traceback of other animals in the infected animal's herd could have begun immediately, to determine whether they had come in contact with animals from other herds.

However, in instances where cattle have been classified as suspects for tuberculosis based on an official tuberculosis test, many owners have decided to wait 60 days (the minimum amount of time required between tests of cattle and bison; the minimum interval for captive cervids is 90 days) to have the animal retested, rather than have the animal destroyed as a suspect, in the hope that on the retest the animal would test negative. In cases where suspect animals have turned out to be infected with the disease, this has delayed the start of traceback procedures.

Also, because they have been unable to obtain appraised value for animals destroyed because of tuberculosis, instead of depopulating an entire herd containing animals known to be infected with or exposed to tuberculosis, owners have often chosen to remove only those animals that have tested positive for the disease. While it is possible to eliminate tuberculosis infection from a herd by the ''test and removal'' method, depopulation of the herd is the most effective method of ensuring that the infection is eliminated. As reported in the proceedings of the 1994 U.S. Animal Health Association Meeting, up to 33 percent of herds that were released from quarantine through the test and removal method between 1985 and 1994 were found to be affected with tuberculosis by the fifth annual quarantine release test. (VanTiem J.S. and Essey M.A. (1994).—Status of the State/Federal bovine tuberculosis eradication program. *Proceedings of Annual Meeting of the U.S. Animal Health Association,* 98, 539–555.)

Because depopulation is a significantly more effective method of eradicating tuberculosis than test and removal, APHIS recently amended the tuberculosis regulations in 9 CFR part 77 to encourage depopulation of affected herds in U.S. States or zones where tuberculous animals are detected. Under those regulations, if a tuberculosis-affected herd is detected in a State or zone classified as accredited-free, and the herd is depopulated with no evidence of the spread of the disease, the State or zone may retain its accredited-free status.

To address the discrepancy that has arisen between the indemnity amounts allowed to be paid to owners of animals and the appraised value of the animals, and to accelerate the eradication of tuberculosis from U.S. cattle, bison, and captive cervid herds, as well as from other susceptible livestock, we are amending the regulations in § 50.3 to provide that owners will receive from APHIS an amount equal to the appraised value of livestock destroyed because of tuberculosis, minus the net salvage received for the animals. This formula will apply to cattle, bison, and captive cervids infected with tuberculosis, exposed to tuberculosis, or classified as tuberculosis suspect, as well as to other livestock that are exposed to tuberculosis. (As defined in § 50.1, ''livestock'' includes cattle, bison, captive cervids, swine, dairy goats, and other hoofed animals (such as llamas, alpacas, and antelope) raised or maintained in captivity for the production of meat and other products, for sport, or for exhibition.)

The regulations in part 50 provide for the payment of indemnity for cattle, bison, and captive cervids destroyed because they are either affected (infected) with tuberculosis, exposed to tuberculosis, or determined to be suspect for tuberculosis. Additionally, the regulations prior to the effective date of this interim rule provided that indemnity could be paid for swine considered to be exposed to tuberculosis by association with a cattle, bison, or captive cervid herd depopulated because of the disease.

We do not consider it consistent or effective, however, to provide for payment of indemnity for swine considered exposed to tuberculosis and not to allow for payment for other susceptible livestock exposed to the disease. In § 50.1, the definition of *livestock*, which lists those livestock susceptible to tuberculosis, includes cattle, bison, captive cervids, swine, dairy goats, and other hoofed animals (such as llamas, alpacas, and antelope), raised or maintained in captivity for the production of meat and other products, for sport, or for exhibition. In this interim rule, we are providing for the payment of indemnity for infected, exposed, or suspect cattle, bison, and captive cervids, and for other livestock considered to be exposed to tuberculosis by reason of association with a depopulated affected herd.

Payment for Animals Destroyed

In this interim rule, we are amending § 50.3 to provide that the APHIS Administrator is authorized to agree on the part of the U.S. Department of Agriculture (Department) to pay indemnity to owners of the following categories of animals:

1. Cattle, bison, or captive cervids destroyed because they are classified as infected with or exposed to tuberculosis;

2. Cattle, bison, or captive cervids destroyed because they are classified as suspect for tuberculosis, except that indemnity will be withheld for suspect animals until the tuberculosis status of the suspect animal has been determined

(through retesting of the animals or through examination of the animals at slaughter) and, if the suspect cattle, bison, or captive cervid is found to be infected with tuberculosis, until all cattle, bison, and captive cervids 12 months of age or older in the claimant's herd have been tested for tuberculosis under APHIS or State supervision; and

3. Other livestock destroyed because they are classified as exposed to tuberculosis by reason of association with a herd destroyed because of tuberculosis, if the designated tuberculosis epidemiologist determines their destruction will contribute to the tuberculosis eradication program.

In each case, the amount of joint State-Federal indemnity payment, together with the amount of net salvage the owner receives when the animals are slaughtered, shall not exceed the appraised value of the animals. Additionally, the Department will in no case pay more than $3,000 for an animal that is destroyed.

The Department and the U.S. Office of Management and Budget are planning to set overall criteria that would govern how the costs of program activities, including the payment of indemnity, are shared among the Federal government and cooperators such as State and local governments, industry and producers. This interim rule may be amended after publication of final cost-sharing criteria.

Section 50.9—Appraisal of Animals

Provisions regarding the appraisal of cattle, bison, captive cervids, and swine destroyed because of tuberculosis are set forth in § 50.9. Those provisions require that, except for certain situations, cattle, bison, captive cervids, and swine to be destroyed because of tuberculosis be appraised within 15 days after being classified as affected (infected) with tuberculosis, or otherwise being condemned because of the disease. The phrase ''animals condemned because of the disease'' refers to animals condemned by the Department's Food Safety and Inspection Service with regard to human consumption, due to the presence in the animal of tuberculosis lesions. Such a finding was relevant under the regulations prior to this interim rule because, although a suspect or exposed animal that was condemned at slaughter would not have any salvage value, it would become eligible for the indemnity rate for an affected (infected) animal ($750) rather than the rate for a suspect or exposed animal ($450). However, because this interim rule makes no distinction between infected, exposed, or suspect animals in the amount of indemnity to be paid, there is no need to include a reference to condemned animals.

We are additionally retaining the provisions in § 50.9 that when the animals to be destroyed are appraised, due consideration shall be given to their breeding value as well as to their dairy or meat value, and that animals presented for payment as registered must be accompanied by their registration papers. If the registration papers are temporarily not available, or if the animals are less than 3 years old and unregistered, the appropriate veterinarian in charge may grant a reasonable period of time for presentation of the registration papers.

We are also retaining the provision that APHIS may decline to accept any appraisal that appears to be unreasonable or out of proportion to the value of like animals of like quality.

Prior to the effective date of this interim rule, § 50.9 provided simply that the appraisal shall be done by an independent professional appraiser at the expense of APHIS, except that the veterinarian in charge could waive the requirement for an independent professional appraiser for reasons satisfactory to the veterinarian in charge. This provision was adequate when the amount to be paid for animals destroyed was a relatively low set amount and the appraisal process was conducted simply to ensure that the maximum set amount did not exceed the appraised value of a destroyed animal. However, because indemnity payments will now equal the appraised value of the animals minus net salvage received (up to $3,000 per animal), we consider it appropriate to provide owners of animals with the option of requesting a review by the Administrator of an appraised value that the owner considers inadequate.

Therefore, we are amending § 50.9 to provide that animals for which indemnity is to be paid under the regulations must be appraised at their fair market value by an appraiser selected by APHIS. Should the appraisal made by the appraiser selected by APHIS be deemed inadequate by the owner of the animals, the owner will have 15 days from the receipt of the appraisal to submit to the Administrator a request for a review of the appraisal, along with the reasons why the animals should be appraised at a higher value. The decision by the Administrator regarding the value of the animals is final.

Section 50.1—Definitions

On October 23, 2000, we published a final rule in the **Federal Register** (65 FR 63502–63533, Docket No. 99–038–5) in which we made a number of changes to the tuberculosis regulations in part 77. Among the changes we made were revisions to definitions of terms used in part 77. Several of the terms that we revised in part 77 are also used and defined in part 50. In this interim rule, we are revising those definitions in § 50.1 to be consistent with the changes we made in part 77. We discuss each of these changes below.

Captive cervid. Prior to the effective date of this interim rule, in part 50 of the regulations *captive cervid* was defined in part as all species of deer, elk, moose, and all other members of the family Cervidae raised or maintained in captivity for the production of meat and other agricultural products, for sport, or for exhibition. That wording is consistent with the definition in part 77 as it appeared prior to our October 23, 2000, final rule. However, in that final rule, we amended the definition of *captive cervid* to clarify that the cervids described above will continue to be considered captive cervids during the time they are moved interstate and that a wild cervid that is moved interstate will be considered a captive cervid during the period of time between its capture and its release into the wild. We also provided that a captive cervid that escapes will continue to be considered a captive cervid as long as it bears an official eartag or other identification approved by the Administrator as unique and traceable with which to trace the animal back to its herd of origin. In this interim rule, we are amending the definition of *captive cervid* in part 50 to be consistent with the definition in part 77.

Designated epidemiologist. Prior to the effective date of this interim rule, *designated epidemiologist* was defined in part 50 as an epidemiologist appointed by a cooperating State animal health official and the veterinarian in charge to perform functions specified by the ''Uniform Methods and Rules Bovine Tuberculosis Eradication.'' The individual referred to as ''designated epidemiologist'' in part 50 is the same individual referred to as ''designated tuberculosis epidemiologist'' in part 77. However, the definition of ''designated tuberculosis epidemiologist'' we set forth in part 77 in our October 23, 2000, final rule provides a more specific description of that individual's responsibilities than the definition of ''designated epidemiologist'' in part 50 prior to this interim rule. Therefore, in this interim rule, we are replacing the definition of *designated epidemiologist* in § 50.1 with a definition of *designated tuberculosis epidemiologist* (DTE) to read: ''A State or Federal epidemiologist

designated by the Administrator to make decisions concerning the use and interpretation of diagnostic tests for tuberculosis and the management of tuberculosis affected herds. A DTE has the responsibility to determine the scope of epidemiologic investigations, determine the status of animals and herds, assist in the development of individual herd plans, and coordinate disease surveillance and eradication programs within the geographic area of the DTE's responsibility.''

Herd. Prior to the effective date of this interim rule, *herd* was defined in part 50 as any group of livestock maintained on common ground for any purpose, or two or more groups of livestock under common ownership or supervision, geographically separated but that have an interchange or movement of livestock without regard to health status, as determined by the Administrator. That wording is consistent with the definition in part 77 as it appeared prior to our October 23, 2000, final rule, except that the part 77 definition included a clarifying statement that a group means one or more animals. However, in our October 23, 2000, final rule, we amended the part 77 definition of *herd* to provide that livestock assembled at a feedlot will not be considered a herd. In this interim rule, we are amending the definition of *herd* in § 50.1 to make it consistent with that change to the definition in part 77. Additionally, on April 20, 2001, we published an interim rule in the **Federal Register** (66 FR 20187–20190, Docket No. 00–102–1) in which we revised the definition of *herd* in § 93.400 as it applied to the provisions regarding the importation of ruminants. In that interim rule, we provided that for a group of animals to be considered a herd, the animals needed to be maintained as a group for at least 4 months. In this interim rule, we are adding that change to the definitions of *herd* in both §§ 50.1 and 77.2.

Herd depopulation. Prior to the effective date of this interim rule, *herd depopulation* was defined as removal by slaughter or other means of destruction of all cattle, bison, and captive cervids in a herd prior to restocking with new cattle, bison, or captive cervids. Because, as discussed above, we consider it necessary to the tuberculosis eradication program to destroy all exposed susceptible animals in an affected herd—not just cattle, bison, and captive cervids—we are revising the definition of *herd depopulation* to state that it involves the removal by slaughter or other means of destruction of all cattle, bison, and captive cervids in a herd, as well as any other exposed livestock in the herd, prior to restocking with new livestock.

Permit. Prior to the effective date of this interim rule, the definition of *permit* referred to a permit for movement of cattle, bison, captive cervids, or swine. For the same reason discussed in the preceding paragraph, we are revising the definition of *permit* to refer to a permit for movement of livestock.

Registered cattle, bison, and captive cervids. Prior to the effective date of this interim rule, § 50.1 included a definition of *registered cattle, bison, and captive cervids.* Because this interim rule provides for payment of indemnity for livestock other than cattle, bison, and captive cervids, we are revising the definition of *registered cattle, bison, and captive cervids* to refer instead to *registered livestock.*

Reactor cattle, bison, and captive cervids. The definition of *reactor cattle, bison, and captive cervids* states the manner in which cattle and bison are determined to be reactors for tuberculosis, then states that captive cervids will be determined to be reactors in the same way as cattle and bison. We are making a nonsubstantive change to combine the language regarding cattle, bison, and captive cervids to make the definition more concise.

In addition to the revisions to the existing definitions in § 50.1, discussed above, we are adding definitions of *net salvage, State animal health official,* and *State representative. Net salvage* is defined as the amount received for animals destroyed because of tuberculosis, after deducting freight, trucking, yardage, commission, slaughtering charges, and similar costs to the owner. Net salvage does not include any amounts received from Federal or State sources for indemnity. *State animal health official* is defined as the individual employed by a State who is responsible for livestock and poultry disease eradication programs in that State. *State representative* is defined as a veterinarian or other person who is employed in livestock sanitary work of a State or a political subdivision of a State and who is authorized by the State or political subdivision to perform the function involved under a memorandum of understanding with the Department.

Section 50.2—Cooperation With States

Prior to the effective date of this interim rule, § 50.2 stated that the Administrator cooperates with the proper State authorities in the eradication of tuberculosis and pays Federal indemnities for the destruction of cattle, bison, captive cervids, or swine affected (infected) with or exposed to tuberculosis. We are updating this language to make it consistent with the other provisions in part 50, by stating that the Administrator pays Federal indemnities for the destruction of cattle, bison, and captive cervids that are infected with, exposed to, or suspect for tuberculosis, and for other livestock exposed to tuberculosis.

Section 50.4—Classification of Livestock

Prior to the effective date of this interim rule, § 50.4 set forth only the criteria used to classify cattle, bison, or captive cervids as affected (infected) with, exposed to, or suspect for tuberculosis. In this interim rule, we are adding a paragraph (d) to § 50.4 to provide that the designated tuberculosis epidemiologist will determine whether livestock other than cattle, bison, or captive cervids are classified as exposed to tuberculosis by reason of association with an affected herd of cattle, bison, or captive cervids.

Section 50.6—Identification of Animals To Be Destroyed

Section 50.6 of the regulations sets forth requirements for the identification of animals that are to be destroyed because of tuberculosis. Those provisions include the requirement that, except in certain specified situations, cattle, bison, captive cervids, and swine to be destroyed because of tuberculosis must be identified within 15 days after being classified as reactors or otherwise condemned because of the disease. Consistent with the change we are making to the regulations at § 50.9 regarding the appraisal of animals for which indemnity is to be paid, we are providing in § 50.6 that the 15-day time limit for identifying animals to be destroyed because of tuberculosis applies to animals classified as either tuberculosis reactors or animals suspect for tuberculosis.

Section 50.7—Destruction of Animals

Section 50.7 of the regulations sets forth certain requirements for the destruction of cattle, bison, captive cervids, and swine destroyed because of tuberculosis and for which indemnity will be paid. We are amending § 50.7(a) and (b) to make the requirements of the section applicable to all livestock.

Section 50.8—Payment for Transportation and Disposal

Section 50.8 of the regulations provides that the Department may pay one-half or more of the expenses of transporting affected (infected),

exposed, or suspect cattle, bison, and captive cervids to slaughter because of tuberculosis or to the point where disposal will otherwise take place, and may also pay one-half or more of the expenses of destroying, burying, incinerating, rendering, or otherwise disposing of the animals. To encourage the destruction of all susceptible livestock exposed to tuberculosis, we are expanding the payment provisions of § 50.8 to include all such livestock.

Section 50.10—Report of Appraisals

Section 50.10 includes provisions for recording information regarding the appraisal of cattle, bison, captive cervids, and swine destroyed because of tuberculosis. We are amending the section to make its provisions applicable to all livestock destroyed because of tuberculosis.

Section 50.11—Report of Salvage Proceeds

Section 50.11 includes provisions for the reporting of salvage proceeds for cattle, bison, captive cervids, and swine destroyed because of tuberculosis. We are amending the section to make its provisions applicable to all livestock destroyed because of tuberculosis.

Section 50.12 Claims for indemnity

Section 50.12 includes provisions for making a claim for indemnity for cattle, bison, captive cervids, and swine destroyed because of tuberculosis. We are amending the section to make its provisions applicable to all livestock destroyed because of tuberculosis. Similarly, we are applying to all livestock destroyed because of tuberculosis the provision in § 50.12 that no charges for holding animals on the farm pending slaughter or for trucking by the owner shall be paid by the Department.

Section 50.14 Claims not Allowed

Section 50.14 provides that claims for compensation for cattle, bison, or captive cervids destroyed because of tuberculosis will not be allowed under certain conditions. For instance, compensation will be not be allowed if all cattle, bison, and captive cervids in the claimant's herd have not been tested for tuberculosis, except under certain specified conditions. Nor will claims be paid if there is substantial evidence that the owner of the animals has attempted to obtain indemnity unlawfully or improperly.

In this interim rule, we are amending § 50.14 by revising certain provisions and adding others. We are changing the introductory language of § 50.14, and also § 50.14(d) so that these sections apply to all livestock destroyed because of tuberculosis, not just to cattle, bison, and captive cervids. In § 50.14(d), we are removing references to animals condemned because of tuberculosis, consistent with changes we are making elsewhere in the part.

Prior to this interim rule, paragraph (b) of § 50.14 provided that claims for payment were not allowed if all cattle, bison, and captive cervids 2 years of age or older in the claimant's herd had not been tested for tuberculosis under APHIS or State supervision. However, in our October 2000 final rule, discussed above, we provided that, in general, animals 12 months of age or older in a herd, rather than 2 years of age or older, needed to be tested for a test to qualify as a whole herd test. Consistent with the provisions of part 77, we are applying the testing requirement in § 50.14(b) to animals 12 months of age or older, rather than 2 years of age or older.

Finally, we are adding a new paragraph (g) to § 50.14 to provide that claims for compensation for livestock other than cattle bison, and captive cervids that are destroyed because of association with herds of affected cattle, bison, or captive cervids will not be allowed if any of the following apply: (1) The livestock did not reside among the herd for a period of 4 months or more; (2) the livestock have not received a postmortem examination for tuberculosis; or (3) the livestock were added to a herd that was under quarantine for tuberculosis at the time the livestock were added to the herd, unless an approved herd plan was in effect at that time. The requirement that the livestock must have resided among the herd for a period of 4 months or more is consistent with the change we are making to the definition of herd, discussed above, to provide that a group of animals maintained on common ground will not be considered a herd unless they have been maintained together for at least 4 months.

Section 50.15 Payment Disclaimer

We are removing § 50.15 because it is no longer necessary. Prior to the effective date of this interim rule, § 50.15 stated that no claim for Federal indemnity for cattle and bison destroyed because of tuberculosis would be paid under the regulations in part 53, but rather would be paid under the regulations in part 50. That section was added a number of years ago when the provisions that are currently in part 50 were established. Those provisions have been in place long enough now to make it unnecessary to state that tuberculosis indemnity payments will not be paid under part 53.

Section 50.16 Cattle on the Island of Molokai

We are also removing § 50.16 because it is no longer necessary. Prior to the effective date of this interim rule, § 50.16 contained provisions governing the payment of indemnity for cattle on the island of Molokai in Hawaii that had been exposed to tuberculosis. These provisions provided that, under certain conditions, indemnity could be paid for exposed cattle on Molokai that were moved to a quarantined feedlot. Because tuberculosis no longer exists among livestock on Molokai, we are removing the provisions of § 50.16.

Emergency Action

This rulemaking is necessary on an emergency basis to ensure that livestock affected by tuberculosis are destroyed as soon as possible to allow for rapid detection of the disease and prevent its spread. Under these circumstances, the Administrator has determined that prior notice and opportunity for public comment are contrary to the public interest and that there is good cause under 5 U.S.C. 553 for making this rule effective less than 30 days after publication in the **Federal Register**.

We will consider comments that are received within 60 days of publication of this rule in the **Federal Register**. After the comment period closes, we will publish another document in the **Federal Register**. The document will include a discussion of any comments we receive and any amendments we are making to the rule as a result of the comments.

Executive Order 12866 and Regulatory Flexibility Act

This rule has been reviewed under Executive Order 12866. The rule has been determined to be significant for the purposes of Executive Order 12866 and, therefore, has been reviewed by the Office of Management and Budget.

Tuberculosis Eradication Strategic Plan

The program to eliminate tuberculosis in livestock in the United States was begun in 1917. Since that time, the rate of tuberculosis has been reduced from about 5 percent of susceptible livestock to today's rate of less than .0002 percent. However, the final instances of a disease are often the most difficult to find and eliminate. The action being taken in this interim rule is one component of a strategic plan APHIS has developed to complete the eradication of bovine tuberculosis in domestic livestock. In addition to the

increase in allowable indemnities for cattle and other livestock, we also have implemented, or are in the process of implementing, the following: Improvement of Federal diagnostic capabilities and national surveillance for tuberculosis; payment of indemnity for the depopulation of herds at high risk for recurrence of the disease; establishment of identification requirements for animals imported into the United States for feeding and slaughter; assistance in eradicating tuberculosis from foreign areas adjacent to the United States that are at high risk for the disease; and research, control, and surveillance of tuberculosis in wildlife, captive cervids, and zoos in the United States.

On October 23, 2000, we published in the **Federal Register** a notice of a declaration by the U.S. Secretary of Agriculture (65 FR 63227, Docket No. 00–066–1), effective October 11, 2000, that authorized the transfer and use of emergency funds to expand the tuberculosis eradication program in the United States, as described in the preceding paragraph. Approximately $1 million of the emergency funds was earmarked for the current fiscal year for livestock eligible for indemnity under this interim rule. APHIS has requested appropriated funding for such indemnity payments for future years to equal approximately $1.6 million per year.

Prior to the effective date of this interim rule, the regulations in § 50.3 set a maximum dollar figure on the amount that could be paid by APHIS for an animal destroyed because of tuberculosis. When these amounts were established, they approximated the fair market value of the animals, minus any salvage value that could be received for the animals. For the most part, however, these amounts were set in 1980 and, in recent years, even when added to the amount received by an owner for salvage, they often came to less than the appraised value of the animals. In this interim rule, we are updating the amount that can be paid for animals destroyed because of tuberculosis to once again allow for payment for the appraised value of the animals, minus salvage value.

In recent years, the disparity between the amount that APHIS could pay for an animal destroyed because of tuberculosis and its appraised value has made some owners reluctant to immediately remove a suspect animal from a herd so that confirmation could be made at slaughter of its tuberculosis status. This has sometimes hindered timely detection and traceback of tuberculous animals, because if a suspect animal were sent to slaughter immediately, and was confirmed there as being infected with, traceback of other animals in the infected animal's herd could have begun immediately, to determine whether they had come in contact with animals from other herds.

However, in instances where cattle have been classified as suspects for tuberculosis based on an official tuberculosis test, many owners have decided to wait 60 days (the minimum amount of time required between tests of cattle and bison; the minimum interval for captive cervids is 90 days) to have the animal retested, rather than have the animal destroyed as a suspect, in the hope that on the retest the animal would test negative. In cases where suspect animals have turned out to be infected with the disease, this has delayed the start of traceback procedures.

Also, because they have been unable to obtain appraised value for animals destroyed because of tuberculosis, instead of depopulating an entire herd containing animals known to be infected with or exposed to tuberculosis, owners have often chosen to remove only those animals that have tested positive for the disease. Studies have shown that up to 33 percent of herds that were released from quarantine through the test and removal method between 1985 and 1994 were found to be affected with tuberculosis by the fifth annual quarantine release test. (VanTiem J.S. and Essey M.A. (1994).—Status of the State/Federal bovine tuberculosis eradication program. *Proceedings of Annual Meeting of the U.S. Animal Health Association,* 98, 539–555.)

Livestock Other Than Cattle, Bison, Captive Cervids, and Swine

Prior to this interim rule, the tuberculosis indemnity regulations allowed for payment for cattle, bison, captive cervids, and swine. In this interim rule, we are also providing payment of indemnity for other livestock considered to be exposed to tuberculosis by reason of association with a depopulated affected herd of cattle, bison, or captive cervids. These ''other livestock'' are defined as including dairy goats and other hoofed animals, such as llamas, alpacas, and antelope. Our primary concern with such animals is that they might spread tuberculosis to cattle, bison, or captive cervids, among which they are sometimes kept. We anticipate that there will be a low likelihood that indemnity will need to be paid for such other livestock, but we are including them in this regulation to address those limited situations where such indemnity will be necessary.

Changes in Indemnity Maximums

Currently, herd owners are paid up to $750 for animals infected with tuberculosis and up to $450 for suspect and exposed animals. Initially, these indemnity limits were consistent with the relative market value of the animals. However, prevailing market values of animals vary by weight class, by breed, and by function. During the past 20 years, the value of livestock has increased while the indemnity rates have remained constant. Livestock entities also specialize in high value stock that exceed these limits of Federal indemnity. This interim rule will allow for higher indemnity payments than do the existing regulations by raising the maximum amount that will be paid for cattle, bison, captive cervids, or other livestock destroyed because of tuberculosis. As with the existing regulations, this interim rule provides for payment of indemnity up to a limit set in the regulations. However, the increase in the limit will, in most cases, provide owners with payment equal to the appraised value of the animals. Also, it will continue to allow for payment by APHIS for one-half or more of the cost of transporting affected animals or herds to diagnostic labs or to slaughter.

These changes are expected to speed up the diagnosis of tuberculosis and, if necessary, herd depopulation. This action will produce positive benefits at relatively minimal cost by hastening the eradication of an economically damaging disease from the United States. This action will have long-term positive budgetary effects. If, as expected, many owners respond to this incentive, initial indemnity costs will rise, but the rapid diagnosis and depopulation of bovine tuberculosis herds will aid in reducing costs of the National Tuberculosis Eradication Program. Additionally, both small and large herd owners will experience a positive economic impact as they will now be fairly compensated for the destruction of any suspect animals, thereby allowing the removal of any interstate quarantines. Furthermore, the value of their herds will increase, both domestically and internationally, when tuberculosis is eliminated from the United States.

Economic Analysis

As of January 1, 2000, the total number of cattle in the United States was approximately 98 million, valued at approximately $58 billion. There were 1,095,960 U.S. operations with cattle.

Over 99.1 percent of these operations were small businesses with gross annual receipts of $500,000 or less. Slaughtering is more concentrated than production of animals. Four firms accounted for 70 percent of commercial cattle slaughter, while over 99 percent of cattle are produced by small herd owners. Nearly 63 percent of slaughters occurred in plants that slaughtered more than a million steers and heifers.

There are about 112,700 bison on 1,150 premises in the United States, valued at about $250 million. Additionally, in 1999, there were about 165,000 known captive cervids, valued at about $390 million, of which 50.9 percent were deer and 48.9 percent, elk. Cervid operations vary in size and degree of commercialization, and many cervid producers also rely on other sources of income. Most, if not all, cervid operations are relatively small and earn less than $500,000.

Prevailing spot market prices of animals are likely to vary by breed, by market, and by weight class. Generally, purebred animals command much higher prices than nonpurebred animals. Registered animals earn more than nonregistered animals. Prices are likely to be influenced by whether the animal is purebred or crossbred, its grade, and by factors such as calving ease, reproductive soundness, weight and body consistency, the calving season, and the animal's general health. Market conditions can also influence the price of bred cows and heifers and bulls. High calf or dairy product prices can induce an interest in beef cow or dairy cow herd expansion, which will in turn lead to an increased demand for bred heifers.

Average grade bred heifer prices range between $800 and $2,000 and most are around $1,500. Top selling bulls are priced a little above this amount. Average grade 2-year old bison heifers sell for about $2,100 (average of Kansas and Nebraska), with average prices ranging between $975 and $2,900. The prices of 2-year old bison bulls range between $750 and $3,250, with the average price about $1,150. Average grade deer prices range between $600 and $1,000, with an average of about $800. Reported elk prices are at the higher end. Bred heifers average about $4,000, while bulls average about $5,500. All of these prices are spot market prices and are likely to vary over time depending on the market situation and the economic outlook.

There is no salvage value when a reactor or suspect animal is taken to a diagnostic laboratory for postmortem examination for bovine tuberculosis. When an animal is found to be infected, the other animals in the herd are all classified at least as exposed. A reactor is generally not salvageable because the Department's Food Safety and Inspection Service requires the meat to be cooked, and most slaughter plants currently do not cook meat from tuberculous animals. Any exposed or suspect animal with post mortem evidence of bovine tuberculosis is classified as a reactor. Exposed animals that were previously tested and had a response to a presumptive test are classified as reactors. Under the regulations prior to this interim rule, an indemnity of $750 each was paid for reactor animals.

A reactor animal can be reclassified as a suspect animal by the epidemiologist under some conditions and can go to slaughter and receive salvage value and up to $450 indemnity if there are no tuberculosis lesions. Exposed animals have been treated the same as suspect animals with regard to the amount of indemnity, and salvage has been paid accordingly. Salvage values of cattle also vary by weight, age, and type. Salvage values of bred heifers or cows range between $350 and $750, with an average of about $550. Bison bulls sell at about $2 per pound of dressed weight. The dressed weight of a bison averages about 640 pounds, with a range of between 550 and 775 pounds, with a consequent average value of about $1,300 (ranging from $1,100 to $1,450). Bison cows are of lower value and sell at about $1 per pound. Their weight is similar to that of bulls. Elk sell on average for $2 per pound of dressed weight. Elk bulls average 700 pounds, with a range of 600 and 1,000 pounds, while an elk cow averages 500 pounds, with a range of between 450 and 650 pounds. Dressed weight is about 67 percent of live weight. Thus, using an average of $2 per pound, the salvage value of an average elk bull and cow is about $938 and $670, respectively.

Given the variability of spot market prices for cattle, bison, and cervids, the current indemnity payments are not sufficient for replacement bred heifers and live bulls auctioned for breeding purpose. This rule, by making a close connection between indemnity payments of animals destroyed because of tuberculosis and their market values at the time the animals are destroyed, provides owners sufficient incentive to eliminate possibly infected animals. This change is expected to speed up the diagnosis of tuberculosis and, when necessary, subsequent herd depopulation.

Because the number of herds and cattle infected with tuberculosis is small relative to the national cattle supply, it is unlikely that this rule will measurably affect livestock prices. Disease status is only one of the components affecting prices of animals. Accelerated and expanded surveillance and testing could yield more suspect herds or animals. However, complete depopulation of an affected herd has been shown to be the most effective way of eliminating tuberculosis in the United States. Reported recurrences of bovine tuberculosis in herds after release of quarantine by test and removal have been estimated at up to 33 percent.

It is expected that final fiscal year 2001 Federal costs for tuberculosis indemnity will total approximately $775,000, as payment for approximately 1,050 animals. However, slightly more than 1,000 of those animals were from Michigan, where known pockets of infection are disproportionately high in comparison to the rest of the United States. Following the depopulation of herds in Michigan in fiscal year 2001, the number of animals eligible for indemnity in that State is expected to fall significantly.

In the remainder of the United States, there is expected to be an increase in the amount of Federal costs for animals depopulated because of tuberculosis, due to the increase in the maximum amount to be paid per animal under this interim rule, along with the likelihood that a greater percentage of owners with indemnity-eligible animals will choose to have their animals destroyed. Projected indemnity costs for each of the 3 years following the effective date of this interim rule are expected to total approximately $1.6 million, as payment for approximately 1,100 animals per year. As noted above, APHIS has requested appropriated funding for such indemnity payments for the next 3 years. Our goal during that period is to reach the point where there are no reported cases of tuberculosis in the United States. However, even at that point, surveillance for tuberculosis will continue in the United States, and it is expected that sporadic cases of tuberculosis will be detected in this country in future years, and that indemnity will need to be paid for the destruction of those affected animals.

Compared to the significance of the livestock industry in the U.S. economy, these additional short-term costs are small. The livestock industry plays a very important role in the U.S. economy. It accounts for over $60 billion of the U.S. gross domestic product. Additionally, it plays a very significant role in international trade. In 1999, the total earnings from exports of live cattle, beef and veal were

approximately $2.8 billion. The U.S. competitiveness in international markets depends to a great degree upon its reputation for producing high quality animals, a reputation that would be enhanced if bovine tuberculosis were eradicated in this country. Purchasers' perceptions of quality contribute to continued world market acceptance. Although relationships between perceived quality and export levels are not sufficiently developed to estimate impacts on trade, it is concluded that eradication of bovine tuberculosis serves the best economic interests of the nation.

Indemnity payments that will be made under this rule for the current fiscal year will come from emergency funds authorized by the Secretary of Agriculture. APHIS has requested appropriated funding for such indemnity payments for future years. This action will have no effect on other Federal agencies or local governments. State governments, however, will benefit from the rapid diagnostic sampling and, if necessary, the depopulation of affected herds. This action will have long-term 'positive budgetary effects. Additionally, both small and large herd owners will eventually experience a positive economic effect as a result of this action since they will now have an incentive to destroy suspect animals, thereby allowing the removal of quarantine. The value of their herds will increase when tuberculosis is eliminated from the United States. Expediting increased indemnity payments will further rapid detection of tuberculous animals, and thus protect against the spread of tuberculosis in the United States and accelerate eradication of the disease in U.S. livestock.

Under these circumstances, the Administrator of the Animal and Plant Health Inspection Service has determined that this action will not have a significant economic impact on a substantial number of small entities.

Executive Order 12372

This program/activity is listed in the Catalog of Federal Domestic Assistance under No. 10.025 and is subject to Executive Order 12372, which requires intergovernmental consultation with State and local officials. (See 7 CFR part 3015, subpart V.)

Executive Order 12988

This rule has been reviewed under Executive Order 12988, Civil Justice Reform. This rule: (1) Preempts all State and local laws and regulations that are in conflict with this rule; (2) has no retroactive effect; and (3) does not require administrative proceedings before parties may file suit in court challenging this rule.

Paperwork Reduction Act

This rule contains no new information or recordkeeping requirements under the Paperwork Reduction Act of 1995 (44 U.S.C. 3501 *et seq.*).

List of Subjects

9 CFR Part 50

Animal diseases, Bison, Cattle, Hogs, Indemnity payments, Reporting and recordkeeping requirements, Tuberculosis.

9 CFR Part 77

Animal diseases, Bison, Cattle, Incorporation by reference, Reporting and recordkeeping requirements, Transportation, Tuberculosis.

Accordingly, we are amending 9 CFR parts 50 and 77 as follows:

PART 50—ANIMALS DESTROYED BECAUSE OF TUBERCULOSIS

1. The authority citation for part 50 continues to read as follows:

Authority: 21 U.S.C. 111–113, 114, 114a, 114a-1, 120, 121, 125, and 134b; 7 CFR 2.22, 2.80, and 371.4.

2. In § 50.1, the definitions of *captive cervid, herd, herd depopulation, permit,* and *reactor cattle, bison, and captive cervids* are revised; the definition of *designated epidemiologist* is removed and a definition of *designated tuberculosis epidemiologist (DTE)* is added in its place; the definition of *registered cattle, bison, or captive cervids* is removed and a definition of registered livestock is added in its place; and definitions of *net salvage* and *State animal health official,* and *State representative* are added in alphabetical order, to read as follows:

§ 50.1 Definitions.

* * * * *

Captive cervid. All species of deer, elk, moose, and all other members of the family Cervidae raised or maintained in captivity for the production of meat and other agricultural products, for sport, or for exhibition, including time such animals are moved interstate; or any wild cervid that is moved interstate, during the period of time from capture until release into the wild. A captive cervid that escapes will continue to be considered a captive cervid as long as it bears an official eartag or other identification approved by the Administrator as unique and traceable with which to trace the animal back to its herd of origin.

* * * * *

Designated tuberculosis epidemiologist (DTE). A State or Federal epidemiologist designated by the Administrator to make decisions concerning the use and interpretation of diagnostic tests for tuberculosis and the management of tuberculosis affected herds. A DTE has the responsibility to determine the scope of epidemiologic investigations, determine the status of animals and herds, assist in the development of individual herd plans, and coordinate disease surveillance and eradication programs within the geographic area of the DTE's responsibility.

* * * * *

Herd. Except for livestock assembled at feedlots, any group of livestock maintained for at least 4 months on common ground for any purpose, or two or more groups of livestock under common ownership or supervision, geographically separated but that have an interchange or movement of livestock without regard to health status, as determined by the Administrator.

Herd depopulation. Removal by slaughter or other means of destruction of all cattle, bison, and captive cervids in a herd, as well as any other exposed livestock in the herd, prior to restocking with new livestock.

* * * * *

Net salvage. The amount received for animals destroyed because of tuberculosis, after deducting freight, trucking, yardage, commission, slaughtering charges, and similar costs to the owner.

* * * * *

Permit. A permit for movement of livestock directly to slaughter, listing the disease status and identification of the animal, where consigned, cleaning and disinfection requirements, and proof of slaughter certification.

* * * * *

Reactor cattle, bison, and captive cervids. Cattle, bison, and captive cervids are classified as reactors for tuberculosis in accordance with the ''Uniform Methods and Rules Bovine Tuberculosis Eradication,'' based on a positive response to an official tuberculin test.

Registered livestock. Livestock for which individual records of ancestry are maintained, and for which individual registration certificates are issued and recorded by a recognized breed association whose purpose is the improvement of the breed.

* * * * *

State animal health official. The individual employed by a State who is responsible for livestock and poultry disease control and eradication programs in that State.

State representative. A veterinarian or other person who is employed in livestock sanitary work of a State or a political subdivision of a State and who is authorized by the State or political subdivision to perform the function involved under a memorandum of understanding with the Department.

* * * * *

3. Section 50.2 is revised to read as follows:

§ 50.2 Cooperation with States.

The Administrator cooperates with the proper State authorities in the eradication of tuberculosis and pays Federal indemnities for the destruction of cattle, bison, and captive cervids that are infected with, exposed to, or suspect for tuberculosis, as well as for other livestock that are exposed to tuberculosis.

4. Section 50.3 is revised to read as follows:

§ 50.3 Payment to owners for animals destroyed.

(a) The Administrator is authorized to agree on the part of the Department to pay indemnity to owners of the following animals:

(1) Cattle, bison, or captive cervids destroyed because the animals are infected with or exposed to tuberculosis;

(2) Cattle, bison, or captive cervids that have been classified as suspect for tuberculosis, except that the payment of indemnity for the destruction of suspect cattle, bison, and captive cervids will be withheld until the tuberculosis status of the suspect animal has been determined and, if the cattle, bison, or captive cervid is found to be infected with tuberculosis, until all cattle, bison, and captive cervids 12 months of age or older in the claimant's herd have been tested for tuberculosis under APHIS or State supervision; and

(3) Other livestock destroyed because they are classified as exposed to tuberculosis by the designated tuberculosis epidemiologist by reason of an association with an affected herd of cattle, bison, or captive cervids.

(b) In each case, the joint State-Federal indemnity paid, together with the amount for net salvage the owner receives, may not exceed the appraised value of the animal, as determined in accordance with § 50.9. Additionally, the Department will in no case pay more than $3,000 for an animal that is destroyed.

5. Section 50.4 is amended as follows:

a. The section heading is revised.

b. Paragraph (a) is amended by removing the word ''affected'' and adding the word ''infected'' in its place.

c. A new paragraph (d) is added.

§ 50.4 Classification of cattle, bison, captive cervids, and other livestock as infected, exposed, or suspect.

* * * * *

(d) The designated tuberculosis epidemiologist will determine whether livestock other than cattle, bison, or captive cervids are classified as exposed to tuberculosis by reason of association with an affected herd of cattle, bison, or captive cervids.

6. Section 50.6 is revised to read as follows:

§ 50.6 Identification of animals to be destroyed because of tuberculosis.

(a) Livestock to be destroyed because of tuberculosis must be identified as follows:

(1) Livestock classified as reactors for tuberculosis must be identified within 15 days after being classified as reactors, except that the veterinarian in charge may extend the time limit for identification to 30 days when he or she receives a request for such an extension prior to the expiration date of the original 15-day period allowed and circumstances beyond the control of the owner warrant such an extension, and the Administrator may extend the time limit for identification beyond 30 days upon request in specific cases when circumstances beyond the control of the owner warrant such an extension.

(2) Livestock other than reactors for tuberculosis that are to be destroyed because of tuberculosis must be identified prior to movement from the premises of origin to the place of destruction.

(b) *Reactor cattle, bison, and captive cervids.* Reactor cattle, bison, and captive cervids must be identified by branding the letter ''T,'' at least 5 by 5 centimeters (2 by 2 inches) in size, high on the left hip near the tailhead and by attaching to the left ear an approved metal eartag bearing a serial number and the inscription ''U.S. Reactor,'' or a similar State reactor tag. Reactor cattle, bison, and captive cervids may be moved interstate to slaughter without branding if they are permanently identified by the letters ''TB'' tattooed legibly in the left ear, they are sprayed on the left ear with yellow paint, and they are either accompanied by an APHIS or State representative or moved directly to slaughter in vehicles closed with official seals. The official seals must be applied and removed by an APHIS representative, State representative, accredited veterinarian, or an individual authorized for this purpose by an APHIS representative.

(c) *Exposed cattle, bison, and captive cervids.* Exposed cattle, bison, and captive cervids must be identified by branding the letter ''S,'' at least 5 by 5 centimeters (2 by 2 inches) in size, high on the left hip near the tailhead and by attaching to either ear an approved metal eartag bearing a serial number. Exposed cattle, bison, and captive cervids may be moved interstate to slaughter without branding if they are either accompanied by an APHIS or State representative or moved directly to slaughter in vehicles closed with official seals. The official seals must be applied and removed by an APHIS representative, State representative, accredited veterinarian, or an individual authorized for this purpose by an APHIS representative.

(d) *Other exposed livestock.* Livestock other than cattle, bison, or captive cervids that are destroyed under the provisions of § 50.3 must be identified by tagging with a serially numbered metal eartag attached to either ear. All such animals to be destroyed must be transported to the place of destruction in vehicles closed with seals provided by APHIS or shall be accompanied to the place of destruction by an APHIS or State representative: *Provided, however,* that animals destroyed and disposed of under the direct supervision of an APHIS or State representative on the premises where they were exposed do not require individual identification.

§ 50.7 [Amended]

7. In § 50.7, paragraphs (a) and (b) are amended by removing the words ''Cattle, bison, captive cervids, or swine'' and adding in their place the word ''Livestock''

§ 50.8 [Amended]

8. Section 50.8, including the section heading, is amended by removing the word ''affected'' each time it appears, and adding in its place the word ''infected''; and by removing the words ''cattle, bison, and captive cervids'' each time they appear, and adding in their place the word ''livestock''.

9. Section 50.9 is revised to read as follows:

§ 50.9 Appraisals.

(a) Livestock to be destroyed because of tuberculosis under § 50.3 must be appraised within 15 days after being classified as infected with tuberculosis, except that the veterinarian in charge may extend the time limit for appraisal to 30 days when he or she receives a

request for such an extension before the end of the expiration date of the original 15-day period allowed and circumstances beyond the control of the owner warrant such an extension, and the Administrator may extend the time limit for appraisal beyond 30 days upon request in specific cases when circumstances beyond the control of the owner warrant such an extension.

(b) Animals for which indemnity is to be paid under this part must be appraised at their fair market value by an appraiser selected by APHIS. APHIS may decline to accept any appraisal that appears to it to be unreasonable or out of proportion to the value of like animals of a like quality. Should the appraisal made by the appraiser selected by APHIS be deemed inadequate by the owner of the animals, the owner will have 15 days from the receipt of the appraisal to submit to the Administrator a request for a review of the appraisal, along with the reasons why the animals should be appraised at a higher value. The decision by the Administrator regarding the value of the animals is final.

(c) When livestock to be destroyed because of tuberculosis are appraised, due consideration will be given to their breeding value as well as to their dairy or meat value. Livestock presented for payment as registered must be accompanied by their registration papers. If the registration papers are temporarily not available, or if the livestock are less than 3 years old and unregistered, the veterinarian in charge may grant a reasonable time for the presentation of their registration papers.

§ 50.10 [Amended]

10. Section 50.10 is amended by removing the words ''cattle, bison, captive cervids, and swine'' and adding in their place the word ''livestock''.

§ 50.11 [Amended]

11. Section 50.11 is amended by removing the words ''cattle, bison, captive cervids, or swine'' both times they appear, and adding in their place the word ''livestock''; and by removing the words ''cattle, bison, captive cervids, and swine'' and adding in their place the word ''livestock''.

§ 50.12 [Amended]

12. Section 50.12 is amended by removing the words ''cattle, bison, captive cervids, or swine'' both times they appear, and adding in their place the word ''livestock''.

§ 50.13 [Amended]

13. Section 50.13 is amended by removing the word ''affected'' and adding in its place the word ''infected''.

14. Section 50.14 is revised to read as follows:

§ 50.14 Claims not allowed.

Claims for compensation for livestock destroyed because of tuberculosis will not be allowed in any of the following cases:

(a) The claimant has failed to comply with any of the requirements of this part:

(b) All cattle, bison, and captive cervids 12 months of age or over in the claimant's herd have not been tested for tuberculosis under APHIS or State supervision: *Provided, however,* that cattle, bison, and captive cervids destroyed because of tuberculosis are exempt from this testing requirement if the cattle, bison, and captive cervids are subjected to a postmortem examination for tuberculosis by a Federal or State veterinarian.

(c) There is substantial evidence that the owner of the animals or the agent of the owner has in any way been responsible for any attempt to obtain indemnity funds for the animals unlawfully or improperly.

(d) At the time the cattle, bison, or captive cervids in the claimant's herd were tested for tuberculosis, the cattle, bison, captive cervids, or other livestock in the herd belonged to or were on the premises of any person to whom they had been sold, shipped, or delivered for slaughter unless or until all of the cattle, bison, captive cervids, and other livestock remaining on the premises or in the herd from which the tested cattle, bison, or captive cervids originated are tested or otherwise examined for tuberculosis in a manner satisfactory to the Administrator or his or her designated representative.

(e) If the cattle, bison, or captive cervids were added to a herd while the herd was quarantined for tuberculosis, unless an approved herd plan was in effect at the time the claim was filed. As part of the approved herd plan, cattle, bison, or captive cervids added to a herd quarantined for tuberculosis must:

(1) Be from an accredited herd, as defined in § 77.1 of this chapter; or (2)(i) Be from a herd that tested negative to an official tuberculin test, as defined in § 77.1 of this chapter, during the 60 days before the cattle, bison, or captive cervids were added to the claimant's herd; and

(ii) Have been found negative to an official tuberculin test, as defined in § 77.1 of this chapter, during the 60 days before the cattle, bison, or captive cervids were added to the claimant's herd.

(f) For exposed cattle, bison, or captive cervids destroyed during herd depopulation, if a designated tuberculosis epidemiologist has determined that other livestock in the herd have been exposed to tuberculosis by reason of association with tuberculous livestock, and those other livestock determined to have been exposed to tuberculosis have not been destroyed.

(g) For livestock other than cattle, bison, and captive cervids that are destroyed because of association with herds of affected cattle, bison, or captive cervids:

(1) If the livestock did not reside among the herd for a period of 4 months or more;

(2) If the livestock have not received a postmortem examination for tuberculosis; or

(3) If the livestock were added to a herd that was under quarantine for tuberculosis at the time the livestock were added to the herd, unless an approved herd plan was in effect at that time.

§§ 50.15 and 50.16 [Removed and Reserved]

15. Sections 50.15 and 50.16 are removed and reserved.

PART 77—TUBERCULOSIS

16. The authority citation for part 77 continues to read as follows:

Authority: 21 U.S.C. 111, 114, 114a, 115–117, 120, 121, 134b, and 134f; 7 CFR 2.22, 2.80, and 371.4.

17. In § 77.2, the definition of *herd* is revised to read as follows:

§ 77.2 Definitions.

* * * * *

Herd Except for livestock assembled at feedlots, any group of livestock maintained for at least 4 months on common ground for any purpose, or two or more groups of livestock under common ownership or supervision, geographically separated but that have an interchange or movement of livestock without regard to health status, as determined by the Administrator.

* * * * *

Done in Washington, DC, this 14th day of February 2002.

Bill Hawks,

Under Secretary for Marketing and Regulatory Programs.

[FR Doc. 02–4059 Filed 2–19–02; 8:45 am]

BILLING CODE 3410–34–U

DEPARTMENT OF TRANSPORTATION

Federal Aviation Administration

14 CFR Part 39

[Docket No. 2001–NM–140–AD; Amendment 39–12653; AD 2002–03–12]

RIN 2120–AA64

Airworthiness Directives; Bombardier Model DHC–8–400 Series Airplanes

AGENCY: Federal Aviation Administration, DOT.

ACTION: Final rule.

SUMMARY: This amendment adopts a new airworthiness directive (AD), applicable to certain Bombardier Model DHC–8–400 series airplanes, that requires a modification and a replacement affecting the fuel tanks in the wings. All affected airplanes require modification of the clearance of the fuel tank vent lines to the left and the right wing fuel tanks. Some affected airplanes also require replacement of three existing fuel probes from the center fuel tank on the left and right wings with new production fuel probes. This action is prompted by mandatory continuing airworthiness information from a foreign airworthiness authority. The actions specified by this AD are necessary to prevent inadequate clearance between the fuel tank vent lines and the adjacent rib structures of the wings or failure of certain temporary, reworked fuel probes in the center fuel tanks in the wings. Either condition could compromise the airplane's lightning protection system, possibly resulting in a fire or explosion if the airplane were hit by lightning. This action is intended to address the identified unsafe condition.

DATES: Effective March 27, 2002.

The incorporation by reference of certain publications listed in the regulations is approved by the Director of the Federal Register as of March 27, 2002.

ADDRESSES: The service information referenced in this AD may be obtained from Bombardier, Inc., Bombardier Regional Aircraft Division, 123 Garratt Boulevard, Downsview, Ontario M3K 1Y5, Canada. This information may be examined at the Federal Aviation Administration (FAA), Transport Airplane Directorate, Rules Docket, 1601 Lind Avenue, SW., Renton, Washington; or at the FAA, New York Aircraft Certification Office, 10 Fifth Street, Third Floor, Valley Stream, New York; or at the Office of the Federal Register, 800 North Capitol Street, NW., suite 700, Washington, DC.

FOR FURTHER INFORMATION CONTACT: Richard Fiesel, Aerospace Engineer, ANE–171, FAA, New York Aircraft Certification Office, 10 Fifth Street, Third Floor, Valley Stream, New York 11581; telephone (516) 256–7504; fax (516) 568–2716.

SUPPLEMENTARY INFORMATION: A proposal to amend part 39 of the Federal Aviation Regulations (14 CFR part 39) to include an airworthiness directive (AD) that is applicable to certain Bombardier Model DHC–8–400 series airplanes was published in the **Federal Register** on November 19, 2001 (66 FR 57905). That action proposed to require two actions—a modification and a replacement—affecting the fuel tanks in the wings. All affected airplanes would require modification of the clearance of the fuel tank vent lines to the left and the right wing fuel tanks. Some affected airplanes would also require replacement of three existing fuel probes from the center fuel tank on the left and right wings with new production fuel probes.

Comments

Interested persons have been afforded an opportunity to participate in the making of this amendment. No comments were submitted in response to the proposal or the FAA's determination of the cost to the public.

Explanation of Change to Final Rule

Since the issuance of the notice of proposed rulemaking (NPRM), the FAA has found that paragraph (b) of the NPRM needs to be clarified. That paragraph requires that replacement of the existing fuel probes 1, 2, and 5 with new production fuel probes be accomplished ''Prior to the accumulation of 4,000 flight hours * * *'' It was our intent that the replacement be accomplished prior to the accumulation of 4,000 ''total'' flight hours. Therefore, we have revised paragraph (b) of the final rule to specify total flight hours.

Conclusion

After careful review of the available data, the FAA has determined that air safety and the public interest require the adoption of the rule with the change described previously. The FAA has determined that this change will neither increase the economic burden on any operator nor increase the scope of the AD.

Cost Impact

There are approximately 32 airplanes of the affected design in the worldwide fleet. The FAA estimates that 15 airplanes of U.S. registry will be affected by this AD.

Thirteen airplanes of U.S. registry will be affected by the required modification of the clearance of the fuel tank vent line. It will take approximately 12 work hours to accomplish the required modification, at an average labor rate of $60 per work hour. Required parts will cost approximately $440 per airplane. Based on these figures, the cost impact of the required modification on U.S. operators is estimated to be $15,080, or $1,160 per airplane.

Seven airplanes of U.S. registry will be affected by the required replacement of the numbers 1, 2, and 5 fuel probes. It will take approximately 2 work hours to accomplish the required replacement, at an average labor rate of $60 per work hour. Required parts will be provided by the manufacturer at no cost to the operators. Based on these figures, the cost impact of the required replacement on U.S. operators is estimated to be $840, or $120 per airplane.

The cost impact figures discussed above are based on assumptions that no operator has yet accomplished any of the requirements of this AD action, and that no operator would accomplish those actions in the future if this AD were not adopted. The cost impact figures discussed in AD rulemaking actions represent only the time necessary to perform the specific actions actually required by the AD. These figures typically do not include incidental costs, such as the time required to gain access and close up, planning time, or time necessitated by other administrative actions.

Regulatory Impact

The regulations adopted herein will not have a substantial direct effect on the States, on the relationship between the national Government and the States, or on the distribution of power and responsibilities among the various levels of government. Therefore, it is determined that this final rule does not have federalism implications under Executive Order 13132.

For the reasons discussed above, I certify that this action (1) is not a ''significant regulatory action'' under Executive Order 12866; (2) is not a ''significant rule'' under DOT Regulatory Policies and Procedures (44 FR 11034, February 26, 1979); and (3) will not have a significant economic impact, positive or negative, on a substantial number of small entities under the criteria of the Regulatory Flexibility Act. A final evaluation has been prepared for this action and it is contained in the Rules Docket. A copy of it may be obtained from the Rules Docket at the location provided under the caption **ADDRESSES**.

List of Subjects in 14 CFR Part 39

Air transportation, Aircraft, Aviation safety, Incorporation by reference, Safety.

Adoption of the Amendment

Accordingly, pursuant to the authority delegated to me by the Administrator, the Federal Aviation Administration amends part 39 of the Federal Aviation Regulations (14 CFR part 39) as follows:

PART 39—AIRWORTHINESS DIRECTIVES

1. The authority citation for part 39 continues to read as follows:

Authority: 49 U.S.C. 106(g), 40113, 44701.

§ 39.13 [Amended]

2. Section 39.13 is amended by adding the following new airworthiness directive:

2002–03–12 Bombardier, Inc. (Formerly de Havilland, Inc.): Amendment 39–12653. Docket 2001–NM–140–AD.

Applicability: Model DHC–8–400 series airplanes; certificated in any category; serial numbers 4005, 4006, 4008 through 4010 inclusive, 4012 through 4015 inclusive, and 4018 through 4040 inclusive.

Note 1: This AD applies to each airplane identified in the preceding applicability provision, regardless of whether it has been modified, altered, or repaired in the area subject to the requirements of this AD. For airplanes that have been modified, altered, or repaired so that the performance of the requirements of this AD is affected, the owner/operator must request approval for an alternative method of compliance in accordance with paragraph (c) of this AD. The request should include an assessment of the effect of the modification, alteration, or repair on the unsafe condition addressed by this AD; and, if the unsafe condition has not been eliminated, the request should include specific proposed actions to address it.

Compliance: Required as indicated, unless accomplished previously.

To prevent inadequate clearance between the fuel tank vent lines and the adjacent rib structures of the wings or failure of certain temporary, reworked fuel probes in the center fuel tanks in the wings, either of which could compromise the airplane's lightning protection system, possibly resulting in a fire or explosion if the airplane were hit by lightning, accomplish the following:

Modification of Clearance of Fuel Tank Vent Lines

(a) For airplanes having serial numbers 4005, 4006, 4008 through 4010 inclusive, 4012 through 4015 inclusive, and 4018 through 4040 inclusive: Within 120 days after the effective date of this AD, modify the clearance of the fuel tank vent lines to the left and the right wing fuel tanks by wrapping 1 piece of Teflon tube around the vent line at each of 10 stations (2 pieces at station 191.200) and securing it with a clamping band (2 clamping bands at station 191.200), in accordance with the Accomplishment Instructions (including Table 1) and Figure 1 of Bombardier Alert Service Bulletin A84–28–02, dated February 7, 2001.

Replacement of Fuel Probes Numbers 1, 2, and 5

(b) For airplanes having serial numbers 4006, 4008, 4012 through 4015 inclusive, and 4018 through 4027 inclusive: Prior to the accumulation of 4,000 total flight hours or within 120 days after the effective date of this AD, whichever occurs later: Replace existing fuel probes numbers 1, 2, and 5 from the center fuel tank on the left and the right wings with new production fuel probes, in accordance with Bombardier Service Bulletin 84–28–01, Revision ''A,'' dated February 8, 2001.

Alternative Methods of Compliance

(c) An alternative method of compliance or adjustment of the compliance time that provides an acceptable level of safety may be used if approved by the Manager, New York Aircraft Certification Office (ACO), FAA. Operators shall submit their requests through an appropriate FAA Principal Maintenance Inspector, who may add comments and then send it to the Manager, New York ACO.

Note 2: Information concerning the existence of approved alternative methods of compliance with this AD, if any, may be obtained from the New York ACO.

Special Flight Permits

(d) Special flight permits may be issued in accordance with sections 21.197 and 21.199 of the Federal Aviation Regulations (14 CFR 21.197 and 21.199) to operate the airplane to a location where the requirements of this AD can be accomplished.

Incorporation by Reference

(e) The actions shall be done in accordance with Bombardier Alert Service Bulletin A84–28–02, dated February 7, 2001; and Bombardier Service Bulletin 84–28–01, Revision ''A,'' dated February 8, 2001; as applicable. This incorporation by reference was approved by the Director of the Federal Register in accordance with 5 U.S.C. 552(a) and 1 CFR part 51. Copies may be obtained from Bombardier, Inc., Bombardier Regional Aircraft Division, 123 Garratt Boulevard, Downsview, Ontario M3K 1Y5, Canada. Copies may be inspected at the FAA, Transport Airplane Directorate, 1601 Lind Avenue, SW., Renton, Washington; or at the FAA, New York Aircraft Certification Office, 10 Fifth Street, Third Floor, Valley Stream, New York; or at the Office of the Federal Register, 800 North Capitol Street, NW., suite 700, Washington, DC.

Note 3: The subject of this AD is addressed in Canadian airworthiness directive CF–2001–14, dated March 21, 2001.

Effective Date

(f) This amendment becomes effective on March 27, 2002.

Issued in Renton, Washington, on February 7, 2002.

Vi L. Lipski,

Manager, Transport Airplane Directorate, Aircraft Certification Service.

[FR Doc. 02–3586 Filed 2–19–02; 8:45 am]

BILLING CODE 4910–13–U

DEPARTMENT OF TRANSPORTATION

Federal Aviation Administration

14 CFR Part 39

[Docket No. 2001–SW–17–AD; Amendment 39–12657; AD 2002–03–16]

RIN 2120–AA64

Airworthiness Directives; Bell Helicopter Textron, Inc.-Manufactured Model OH–13E, OH–13H, and OH–13S Helicopters

AGENCY: Federal Aviation Administration, DOT.

ACTION: Final rule.

SUMMARY: This amendment supersedes an existing airworthiness directive (AD) for Model OH–13E, OH–13H, and OH–13S helicopters manufactured by Bell Helicopter Textron, Inc. (BHTI). That AD currently requires either recurring liquid penetrant or eddy current inspections of the main rotor blade grip (grip) threads for a crack. If a crack is detected, that AD requires, before further flight, replacing the cracked grip with an airworthy grip. That AD also establishes a retirement life of 1200 hours time-in-service (TIS) for each grip. This amendment adds two part numbers (P/N) to the applicability and requires only recurring eddy current inspections of the grip threads. This AD also requires reporting any results of the grip inspections to the FAA Rotorcraft Certification Office. This amendment is prompted by the issuance of an AD for the civil BHTI Model 47 helicopters and the results of an accident investigation, an operator survey conducted by a trade association, various comments concerning the subject of the current AD, and a further analysis of field service data related to the BHTI Model 47 helicopters. The actions specified by this AD are intended to prevent failure of a grip, loss of a main rotor blade, and subsequent loss of control of the helicopter.

EFFECTIVE DATE: March 27, 2002.

FOR FURTHER INFORMATION CONTACT: Marc Belhumeur, Aviation Safety Engineer, FAA, Rotorcraft Directorate, Rotorcraft Certification Office, Fort Worth, Texas 76193–0170, telephone (817) 222–5177, fax (817) 222–5783.

SUPPLEMENTARY INFORMATION: A proposal to amend 14 CFR part 39 by superseding AD 2000–18–52, Amendment 39–11984 (65 FR 68873, November 15, 2000), which applies to BHTI-manufactured Model OH–13E, OH–13H, and OH–13S helicopters, was published in the **Federal Register** on October 29, 2001 (66 FR 54453). That action proposed to supersede AD 2000–18–52 and require the following:

- For grips, P/N 47–120–135–2, 47–120–135–3, 47–120–135–5, 47–120–252–1, 47–120–252–7, 47–120–252–11, and for grips manufactured under Parts Manufacturer Approval, P/N 74–120–252–11, 74–120–135–5, R74–120–252–11, and R74–120–135–5, conduct eddy current inspections of the threads of both grips as follows:
- Within 300 hours TIS since initial installation on any helicopter or within 10 hours TIS for grips with 300 or more hours TIS, or within 200 hours TIS since last liquid penetrant or eddy current inspection, whichever comes first, conduct an eddy current inspection in accordance with the procedures in Appendix 1 of this AD or an equivalent FAA-approved procedure that contains the requirements of the procedure in Appendix 1. Thereafter, conduct the eddy current inspection at intervals not to exceed 300 hours TIS.
- Report the results of each inspection to the FAA Rotorcraft Certification Office by providing the information requested in the sample format report in Appendix 3 of this AD. Information collection requirements contained in this AD have been approved by the Office of Management and Budget (OMB) under the provisions of the Paperwork Reduction Act of 1980 (44 U.S.C. 3501 *et seq.*) and have been assigned OMB Control Number 2120–0056.
- Before further flight, replace any cracked grip with an airworthy grip. Also, the AD proposed maintaining the current retirement life of 1200 hours TIS for each affected grip.

Interested persons have been afforded an opportunity to participate in the making of this amendment. No comments were received on the proposal or the FAA's determination of the cost to the public. The FAA has determined that air safety and the public interest require the adoption of the rule as proposed. However, a non-substantive change has been made to paragraph (a)(2) of the AD that describes the OMB information collection requirements; this change will neither increase the economic burden on any operator nor increase the scope of the AD.

The FAA estimates that 300 helicopters of U.S. registry will be affected by this AD, that it will take approximately 10 work hours per helicopter to accomplish the disassembly, inspection, and reassembly of the grips from the helicopter, and that the average labor rate is $60 per work hour. Required parts, if a grip needs to be replaced, will cost approximately $4,000 per grip. There are two grips on each helicopter. Based on these figures, the total cost impact of this AD on U.S. operators is estimated to be $2,580,000, assuming one inspection per helicopter and replacement of both grips on each helicopter.

The regulations adopted herein will not have a substantial direct effect on the States, on the relationship between the national Government and the States, or on the distribution of power and responsibilities among the various levels of government. Therefore, it is determined that this final rule does not have federalism implications under Executive Order 13132.

For the reasons discussed above, I certify that this action (1) is not a ''significant regulatory action'' under Executive Order 12866; (2) is not a ''significant rule'' under DOT Regulatory Policies and Procedures (44 FR 11034, February 26, 1979); and (3) will not have a significant economic impact, positive or negative, on a substantial number of small entities under the criteria of the Regulatory Flexibility Act. A final evaluation has been prepared for this action and it is contained in the Rules Docket. A copy of it may be obtained from the Rules Docket at the FAA, Office of the Regional Counsel, Southwest Region, 2601 Meacham Blvd., Room 663, Fort Worth, Texas.

List of Subjects in 14 CFR Part 39

Air transportation, Aircraft, Aviation safety, Safety.

Adoption of the Amendment

Accordingly, pursuant to the authority delegated to me by the Administrator, the Federal Aviation Administration amends part 39 of the Federal Aviation Regulations (14 CFR part 39) as follows:

PART 39—AIRWORTHINESS DIRECTIVES

1. The authority citation for part 39 continues to read as follows:

Authority: 49 U.S.C. 106(g), 40113, 44701.

§ 39.13 [Amended]

2. Section 39.13 is amended by removing Amendment 39–11984 (65 FR 68873, November 15, 2000), and by adding a new airworthiness directive (AD), Amendment 39–12657, to read as follows:

2002–03–16 Continental Copters, Inc.; Gifton McCreay (Formerly Aerodyne Systems Engineering, Ltd., Formerly Texas Helicopter Corp.); Hawkeye Rotor and Wing Flight School; and Teryjon Aviation Inc.: Amendment 39–12657. Docket No. 2001–SW–17–AD. Supersedes AD 2000–18–52, Amendment 39–11984, Docket No. 2000–SW–36–AD.

Applicability: Model OH–13E, OH–13H, and OH–13S helicopters manufactured by Bell Helicopter Textron, Inc. (BHTI), with main rotor blade grips, part number (P/N) 47–120–135–2, 47–120–135–3, 47–120–135–5, 47–120–252–1, 47–120–252–7, 47–120–252–11, 74–120–252–11, 74–120–135–5, R74–120–252–11, or R74–120–135–5, installed, certificated in any category.

Note 1: This AD applies to each helicopter identified in the preceding applicability provision, regardless of whether it has been otherwise modified, altered, or repaired in the area subject to the requirements of this AD. For helicopters that have been modified, altered, or repaired so that the performance of the requirements of this AD is affected, the owner/operator must request approval for an alternative method of compliance in accordance with paragraph (e) of this AD. The request should include an assessment of the effect of the modification, alteration, or repair on the unsafe condition addressed by this AD; and if the unsafe condition has not been eliminated, the request should include specific proposed actions to address it.

Compliance: Required as indicated, unless accomplished previously.

To prevent failure of a main rotor blade grip (grip), separation of a main rotor blade, and subsequent loss of control of the helicopter, accomplish the following:

(a) Conduct an eddy current inspection of the threads of both grips for a crack in accordance with Appendix 1 of this AD or an equivalent FAA-approved procedure containing the requirements of the procedure in Appendix 1 within 300 hours time-in-service (TIS) since initial installation on any helicopter or within 10 hours TIS for grips with 300 or more hours TIS or within 200 hours TIS since the last liquid penetrant or eddy current inspection of grip threads, whichever comes first.

(1) Thereafter, conduct the eddy current inspection in accordance with Appendix 1 of this AD or an equivalent FAA-approved procedure containing the requirements of the procedure in Appendix 1 at intervals not to exceed 300 hours TIS.

(2) Report the results of each inspection to the FAA Rotorcraft Certification Office within 7 calendar days. Information collection requirements contained in this AD have been approved by the Office of Management and Budget (OMB) under the provisions of the Paperwork Reduction Act of 1980 (44 U.S.C. 3501 *et seq.*) and have been assigned OMB Control Number 2120–0056.

Note 2: See Appendix 2 of this AD for a list of known eddy current inspection facilities.

(b) If a crack is detected, before further flight, replace any cracked grip with an airworthy grip.

(c) On or before 1200 hours TIS, replace each grip with an airworthy grip.

(d) This AD establishes a retirement life of 1200 hours TIS for the grips, P/N 47–120–135–2, 47–120–135–3, 47–120–135–5, 47–120–252–1, 47–120–252–7, 47–120–252–11, 74–120–252–11, 74–120–135–5, R74–120–252–11, and R74–120–135–5.

(e) An alternative method of compliance or adjustment of the compliance time that provides an acceptable level of safety may be used if approved by the Manager, Rotorcraft Certification Office, FAA. Operators shall submit their requests through an FAA Principal Maintenance Inspector, who may concur or comment and then send it to the Manager, Rotorcraft Certification Office.

Note 3: Information concerning the existence of approved alternative methods of compliance with this AD, if any, may be obtained from the Rotorcraft Certification Office.

(f) Special flight permits may be issued in accordance with 14 CFR 21.197 and 21.199 to operate the helicopter to a location where the requirements of this AD can be accomplished.

(g) This amendment becomes effective on March 27, 2002.

Appendix 1

NONDESTRUCTIVE INSPECTION PROCEDURE

TASK: EDDY CURRENT (ET) INSPECTION OF MAST THREADS FOR CRACKS

1.0 AREA OF INSPECTION

1.1 The inboard inside diameter machined threads (reference Figure 1).

2.0 EQUIPMENT

2.1 Zetec Miz-20/22, Phasec 2200 or equivalent piece of equipment.

2.2 Match molded ET probe SPC-193 (100kHz) or equivalent. (See Figure 3.)

2.3 Reference standard EC-010-021, or equivalent. (See Figures 4 and 5.)

2.4 Light oil.

3.0 PERSONNEL REQUIREMENTS

3.1 Personnel performing the ET inspection must be minimally qualified to a Level II in ET inspection, certified in accordance with an industry accepted standard (such as ATA-105, NAS-410, or MIL-STD-410) or an FAA accepted company procedure.

4.0 STANDARDIZATION

4.1 Connect probe to flaw detector and turn power on.

4.2 Adjust the Phasec 2000 as shown in Table 1. Adjust all other equipment as necessary.

4.3 Adjust the V:H gain ratio to 1.5:1 - 2:1.

4.4 Monitor the crack response when moving the probe in one direction only across each EDM notch of the standard. Adjust the coarse gain for a crack response of 2 - 3 units from the smallest (0.04") notch. Record the number units of displacement and noise level for each of the EDM notches.

5.0 PRE INSPECTION

5.1 The part shall be clean and free of loose debris.

5.2 A thin coating of clean oil may be applied to the teeth to help the ET probe slide easily.

6.0 INSPECTION

6.1 Place the probe into the threaded area and slide it in the same direction as was done on the standard while monitoring the screen for root cracks. Moving the probe in the same direction produces a repeatable display that allows for more accurate flaw size determination. Scan the probe along each individual thread until all the threads are inspected. (See Figures 2 and 3.)

NONDESTRUCTIVE INSPECTION PROCEDURE (CONT.)

7.0 EVALUATION

7.1 Repeat standardization and rescan any areas where there is a vertical crack-like deflection.

7.2 If indication persists, mark the location on the part. Record the number units of displacement, phase orientation, and noise level.

8.0 ACCEPT/REJECT CRITERIA

8.1 All repeatable crack-like indications above the noise level detected shall be cause for rejection.

Zetec M12 - 20/22, Phasec 2200 Settings

Dialogue: English	Alarm Stretch: 1S	Probe: Standard
Printer: HP PCL	Alarm Shape: Off	Drive: +10dB 6.3V
◀Bright Bal▶ Low Split	Apply to: Trace 1	Analogue 1:Out Off
Graticule: Rect. A	◀Alarm action▶ Run Silent	Analogue 2: Out Off

Ser'l Conf. Alarm I/0 Time Batt.

Hi-pass: DC	CH1 Freq: 100KHz	◀ Mode: Diff 1Ch
Lo-pass: 20 Hz	CH1 PHASE: 193.0°	Display: XY
Inp. Gain: +20dB	CH1 GAIN: 46.0Db	View: Ch1
Optimize: ◀ + ▶	CH1 X:Y: X -3.0dB	Persist: Permn't

Table 1, Appendix 1

NONDESTRUCTIVE INSPECTION PROCEDURE (CONT.)

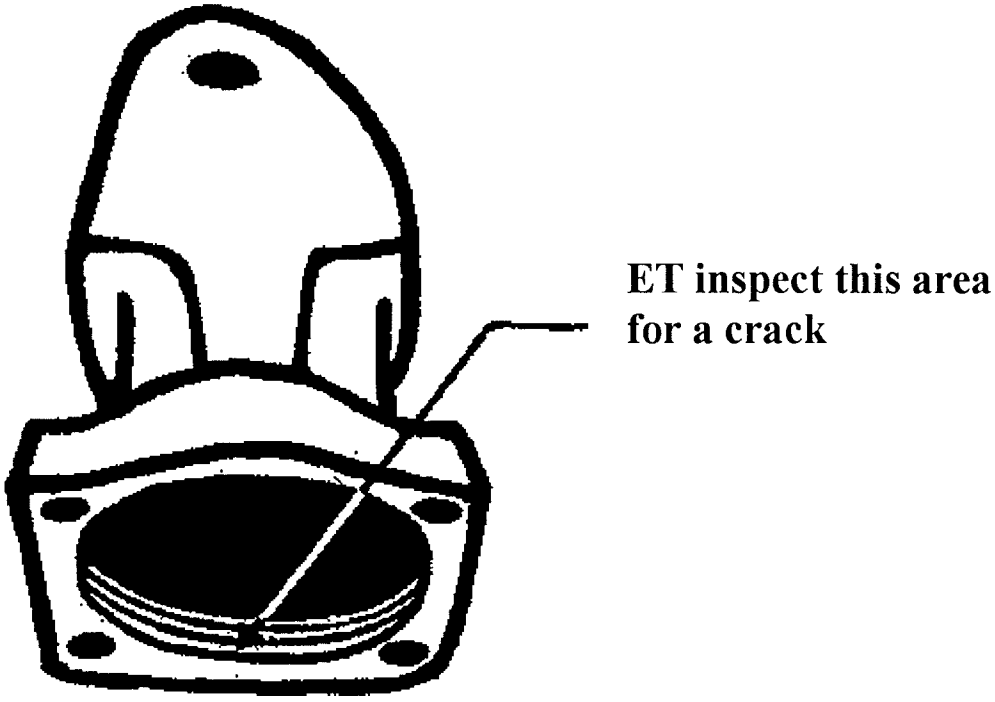

Figure 1, Appendix 1

NONDESTRUCTIVE INSPECTION PROCEDURE (CONT.)

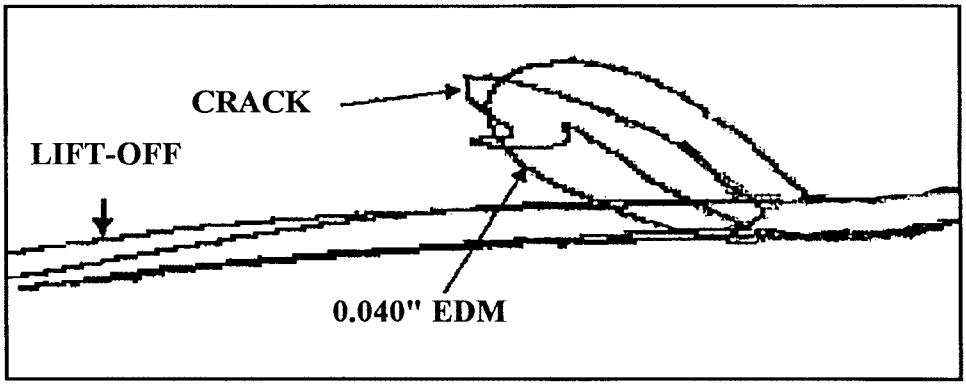

Mode Chan1 Input PosXY

A typical flaw indication appears on the eddy current monitor as shown above.

Figure 2, Appendix 1

NONDESTRUCTIVE INSPECTION PROCEDURE (CONT.)

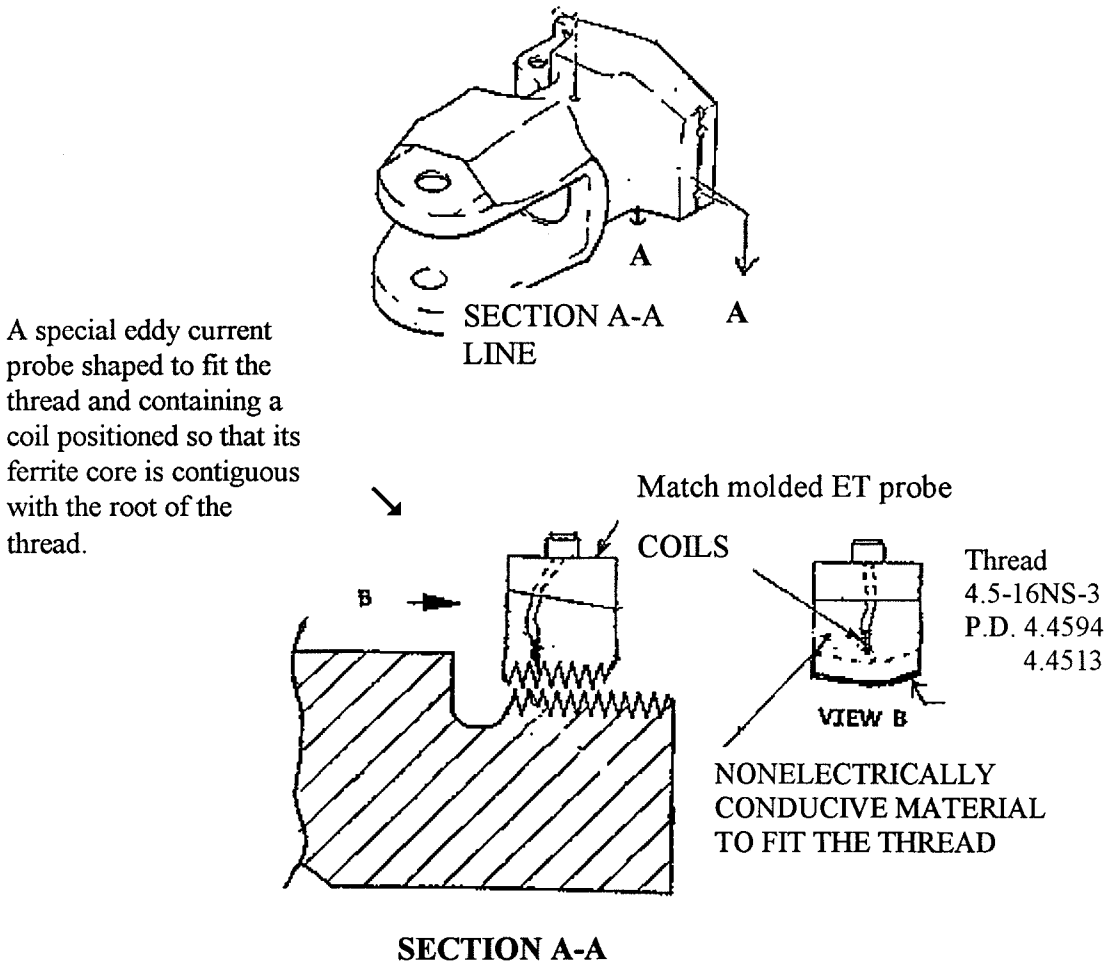

Figure 3, Appendix 1

NONDESTRUCTIVE TESTING PROCEDURE (CONT.)

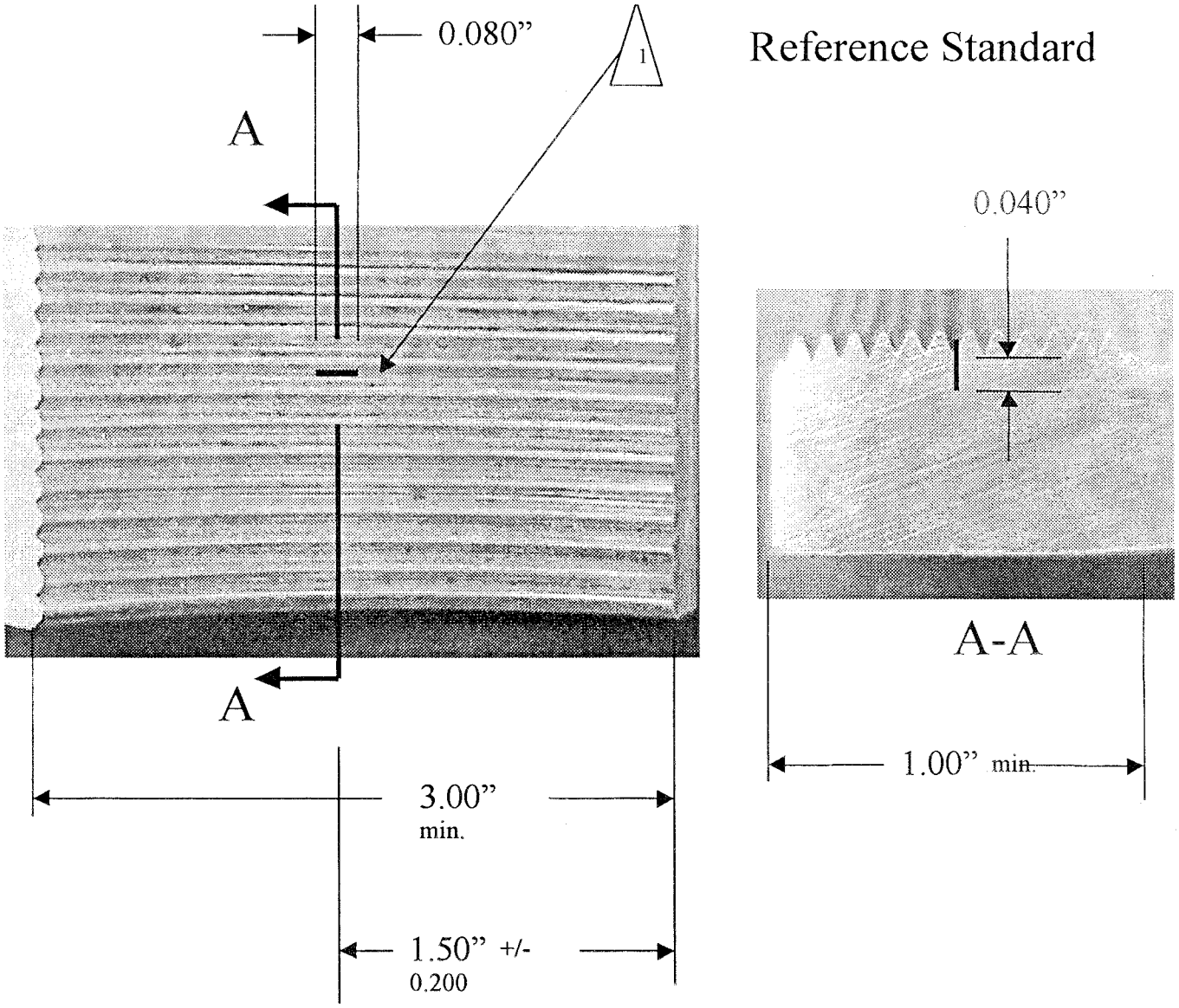

1 EDM 1 place only in thread root.
Notch width shall be 0.004 max.
All other dimensions to be +/- 0.004 from indicated.

Figure 4, Appendix 1

NONDESTRUCTIVE INSPECTION PROCEDURE (CONT.)

Reference Standard

MACHINING NOTES:

1. Standard may be machined from aluminum tube stock.
2. The standard shall contain a minimum of four teeth per the tooth dimensions specified.
3. The EDM notch shall be placed in the center most tooth root as measured across the width of the standards. There shall be no less than two teeth and one root on either side of the EDM notch.

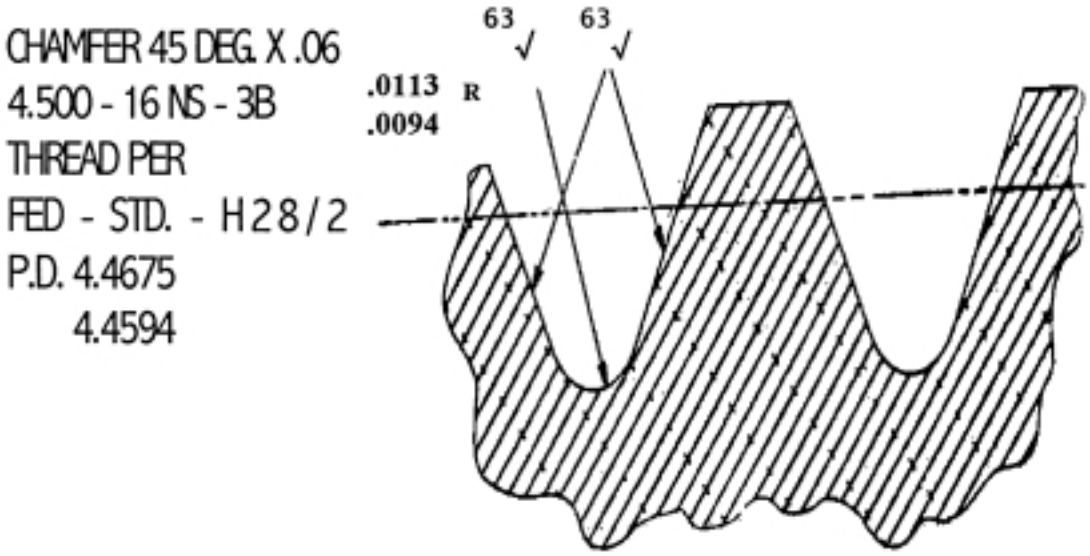

Figure 5, Appendix 1

Appendix 2

Partial List of Nondestructive Inspection Testing Facilities Identified by Operators and FAA

Met Chem Testing Laboratories Inc., 369 W. Gregson Ave. (3085 S.), Salt Lake City, Utah 84115–3440, Phone: (801) 487–0801, FAX: (801) 466–8790, *www.metchemtesting.com*.

Galactic NDT Services, 10728 D. South Pipeline RD, Hurst, Texas 76053, Phone: (800) 458–6387.

Global Testing Technologies, 1173 North Service Rd. Unit D3, Oakville Toronto Canada, Phone: (905) 847–9300, FAX: (905) 847–9330.

Paragon Services, Inc., 1015 S. West St., Wichita, KS 67213, Phone: (316) 945–5285, FAX: (316) 945–0629.

NOE Services, 8775 E. Orchard Rd. #809, Englewood, CO, Phone: (303) 741–0518, FAX: (303) 741–0519.

Applied Technical Services, Inc., 1190 Atlanta Industrial Drive, Marietta, GA 30066, Phone: (770) 423–1400, FAX: (770) 514–3299.

Rotorcraft Support, Van Nuys CA 91406, Phone: (818) 997–7667, FAX: (818) 997–1513.

Other FAA Approved repair facilities may be used.

Appendix 3

AD Compliance Inspection Report (Sample Format) Model OH–13 Main Rotor Blade Grip

Provide the following information and mail or fax it to:

Manager, Rotorcraft Certification Office, Federal Aviation Administration, Fort Worth, Texas, 76193–0170, USA, Fax: 817–222–5783.

Aircraft Registration No:
Helicopter Model:
Helicopter Serial Number:
Owner and Operator of the Helicopter:
Grip #1———Grip #2
Part Number:
Serial Number:
Hours TIS on the part at Inspection:
Crack Found (Y/N)
If yes, describe below.
Description of Findings
Who performed the inspections?
If a crack was found, describe the crack size, location, and orientation (provide a sketch or pictures with the grip part and serial number).
Provide any other comments.

Issued in Fort Worth, Texas, on February 6, 2002.

David A. Downey,

Manager, Rotorcraft Directorate, Aircraft Certification Service.

[FR Doc. 02–3851 Filed 2–19–02; 8:45 am]

BILLING CODE 4910–13–U

DEPARTMENT OF TRANSPORTATION

Federal Aviation Administration

14 CFR Part 39

[Docket No. 2001–NM–155–AD; Amendment 39–12655; AD 2002–03–14]

RIN 2120–AA64

Airworthiness Directives; Bombardier Model CL–600–2B19 Series Airplanes

AGENCY: Federal Aviation Administration, DOT.

ACTION: Final rule.

SUMMARY: This amendment adopts a new airworthiness directive (AD), applicable to certain Bombardier Model CL–600–2B19 series airplanes, that requires repetitive inspections for cracking of the left and right lower wing planks, and repair, if necessary. The actions specified by this AD are intended to find and fix such cracking, which could result in reduced structural integrity of the wing. This action is intended to address the identified unsafe condition.

DATES: Effective March 27, 2002.

The incorporation by reference of certain publications listed in the regulations is approved by the Director of the Federal Register as of March 27, 2002.

ADDRESSES: The service information referenced in this AD may be obtained from Bombardier, Inc., Canadair, Aerospace Group, P.O. Box 6087, Station Centre-ville, Montreal, Quebec H3C 3G9, Canada. This information may be examined at the Federal Aviation Administration (FAA), Transport Airplane Directorate, Rules Docket, 1601 Lind Avenue, SW., Renton, Washington; or at the FAA, New York Aircraft Certification Office, 10 Fifth Street, Third Floor, Valley Stream, New York; or at the Office of the Federal Register, 800 North Capitol Street, NW., suite 700, Washington, DC.

FOR FURTHER INFORMATION CONTACT: Serge Napoleon, Aerospace Engineer, Airframe and Propulsion Branch, ANE–171, FAA, New York Aircraft Certification Office, 10 Fifth Street, Third Floor, Valley Stream, New York 11581; telephone (516) 256–7512; fax (516) 568–2716.

SUPPLEMENTARY INFORMATION: A proposal to amend part 39 of the Federal Aviation Regulations (14 CFR part 39) to include an airworthiness directive (AD) that is applicable to certain Bombardier Model CL–600–2B19 series airplanes was published in the **Federal Register** on October 30, 2001 (66 FR 54725). That action proposed to require repetitive inspections for cracking of the left and right lower wing planks, and repair, if necessary.

Comments

Interested persons have been afforded an opportunity to participate in the making of this amendment. No comments were submitted in response to the proposal or the FAA's determination of the cost to the public.

Conclusion

The FAA has determined that air safety and the public interest require the adoption of the rule as proposed.

Interim Action

This is considered to be interim action until final action is identified, at which time the FAA may consider further rulemaking.

Cost Impact

The FAA estimates that 214 airplanes of U.S. registry will be affected by this AD, that it will take approximately 1 work hour per airplane to accomplish the required inspections, and that the average labor rate is $60 per work hour. Based on these figures, the cost impact of the AD on U.S. operators is estimated to be $12,840, or $60 per airplane, per inspection cycle.

The cost impact figure discussed above is based on assumptions that no operator has yet accomplished any of the requirements of this AD action, and that no operator would accomplish those actions in the future if this AD were not adopted. The cost impact figures discussed in AD rulemaking actions represent only the time necessary to perform the specific actions actually required by the AD. These figures typically do not include incidental costs, such as the time required to gain access and close up, planning time, or time necessitated by other administrative actions.

Regulatory Impact

The regulations adopted herein will not have a substantial direct effect on the States, on the relationship between the national Government and the States, or on the distribution of power and responsibilities among the various levels of government. Therefore, it is determined that this final rule does not have federalism implications under Executive Order 13132.

For the reasons discussed above, I certify that this action (1) is not a ''significant regulatory action'' under Executive Order 12866; (2) is not a ''significant rule'' under DOT Regulatory Policies and Procedures (44 FR 11034, February 26, 1979); and (3) will not have a significant economic impact, positive or negative, on a substantial number of small entities under the criteria of the Regulatory Flexibility Act. A final evaluation has been prepared for this action and it is contained in the Rules Docket. A copy of it may be obtained from the Rules Docket at the location provided under the caption **ADDRESSES.**

List of Subjects in 14 CFR Part 39

Air transportation, Aircraft, Aviation safety, Incorporation by reference, Safety.

Adoption of the Amendment

Accordingly, pursuant to the authority delegated to me by the Administrator, the Federal Aviation Administration amends part 39 of the Federal Aviation Regulations (14 CFR part 39) as follows:

PART 39—AIRWORTHINESS DIRECTIVES

1. The authority citation for part 39 continues to read as follows:

Authority: 49 U.S.C. 106(g), 40113, 44701.

§ 39.13 [Amended]

2. Section 39.13 is amended by adding the following new airworthiness directive:

2002–03–14 Bombardier, Inc. (Formerly Canadair): Amendment 39–12655. Docket 2001–NM–155–AD.

Applicability: Model CL–600–2B19 series airplanes, serial numbers 7003 through 7999 inclusive, certificated in any category.

Note 1: This AD applies to each airplane identified in the preceding applicability provision, regardless of whether it has been modified, altered, or repaired in the area subject to the requirements of this AD. For airplanes that have been modified, altered, or repaired so that the performance of the requirements of this AD is affected, the owner/operator must request approval for an alternative method of compliance in accordance with paragraph (d) of this AD. The request should include an assessment of the effect of the modification, alteration, or repair on the unsafe condition addressed by this AD; and, if the unsafe condition has not been eliminated, the request should include specific proposed actions to address it.

Compliance: Required as indicated, unless accomplished previously.

To find and fix cracking of the left and right lower wing planks, which could result in reduced structural integrity of the wing, accomplish the following:

Repetitive Inspections

(a) Perform an external detailed visual inspection for cracking of the left and right lower wing planks in the area of the rear spar and wing station 148.019, according to Part 2, Accomplishment Instructions, of Bombardier Alert Service Bulletin A601R–57–031, Revision ''A,'' including Appendix A, dated March 28, 2001. Do the initial inspection at the time shown in paragraph (a)(1), (a)(2), or (a)(3) of this AD, as applicable; and repeat the inspection at least every 5,000 flight cycles.

Note 2: For the purposes of this AD, a detailed visual inspection is defined as: ''An intensive visual examination of a specific structural area, system, installation, or assembly to detect damage, failure, or irregularity. Available lighting is normally supplemented with a direct source of good lighting at intensity deemed appropriate by the inspector. Inspection aids such as mirror, magnifying lenses, etc., may be used. Surface cleaning and elaborate access procedures may be required.''

Compliance Times for Inspection

(1) For airplanes that have accumulated 6,500 total flight cycles or less as of the effective date of this AD: Inspect prior to the accumulation of 7,000 total flight cycles.

(2) For airplanes that have accumulated 6,501 total flight cycles, but fewer than 13,500 total flight cycles, as of the effective date of this AD: Inspect prior to the accumulation of 13,700 total flight cycles, or within 500 flight cycles after the effective date of this AD, whichever occurs first.

(3) For airplanes that have accumulated 13,500 total flight cycles or more as of the effective date of this AD: Inspect within 200 flight cycles after the effective date of this AD.

Note 3: Inspections accomplished prior to the effective date of this AD in accordance with Bombardier Alert Service Bulletin A601R–57–031, dated March 22, 2001, are considered acceptable for compliance with paragraph (a) of this AD.

Note 4: There is no terminating action available at this time for the repetitive inspections required by paragraph (a) of this AD.

Repair

(b) If any crack is found during any inspection according to paragraph (a) of this AD: Before further flight, repair per a method approved by either the Manager, New York Aircraft Certification Office (ACO), FAA; or Transport Canada Civil Aviation (or its delegated agent).

Reporting Requirement

(c) Submit a report of inspection findings (both positive and negative) to Bombardier Aerospace Technical Help Desk, fax (514) 855–8500, at the applicable time specified in paragraph (c)(1) or (c)(2) of this AD. Information collection requirements contained in this regulation have been approved by the Office of Management and Budget (OMB) under the provisions of the Paperwork Reduction Act of 1980 (44 U.S.C. 3501 *et seq.*) and have been assigned OMB Control Number 2120–0056.

(1) For airplanes on which the inspection is accomplished after the effective date of this AD: Submit the report within 30 days after performing the inspection required by paragraph (a) of this AD.

(2) For airplanes on which the inspection has been accomplished prior to the effective date of this AD: Submit the report within 30 days after the effective date of this AD.

Alternative Methods of Compliance

(d) An alternative method of compliance or adjustment of the compliance time that provides an acceptable level of safety may be used if approved by the Manager, New York ACO. Operators shall submit their requests through an appropriate FAA Principal Maintenance Inspector, who may add comments and then send it to the Manager, New York ACO.

Note 5: Information concerning the existence of approved alternative methods of compliance with this AD, if any, may be obtained from the New York ACO.

Special Flight Permits

(e) Special flight permits may be issued in accordance with sections 21.197 and 21.199 of the Federal Aviation Regulations (14 CFR 21.197 and 21.199) to operate the airplane to a location where the requirements of this AD can be accomplished.

Incorporation by Reference

(f) The inspections shall be done in accordance with Bombardier Alert Service Bulletin A601R–57–031, Revision ''A,'' including Appendix A, dated March 28, 2001. This incorporation by reference was approved by the Director of the Federal Register in accordance with 5 U.S.C. 552(a) and 1 CFR part 51. Copies may be obtained from Bombardier, Inc., Canadair, Aerospace Group, P.O. Box 6087, Station Centre-ville, Montreal, Quebec H3C 3G9, Canada. Copies may be inspected at the FAA, Transport Airplane Directorate, 1601 Lind Avenue, SW., Renton, Washington; or at the FAA, New York Aircraft Certification Office, 10 Fifth Street, Third Floor, Valley Stream, New York; or at the Office of the Federal Register, 800 North Capitol Street, NW., suite 700, Washington, DC.

Note 6: The subject of this AD is addressed in Canadian airworthiness directive CF–2001–15, dated March 30, 2001.

Effective Date

(g) This amendment becomes effective on March 27, 2002.

Issued in Renton, Washington, on February 8, 2002.

Vi L. Lipski,

Manager, Transport Airplane Directorate, Aircraft Certification Service.

[FR Doc. 02–3611 Filed 2–19–02; 8:45 am]

BILLING CODE 4910–13–U

DEPARTMENT OF TRANSPORTATION

Federal Aviation Administration

14 CFR Part 39

[Docket No. 2001–NM–143–AD; Amendment 39–12654; AD 2002–03–13]

RIN 2120–AA64

Airworthiness Directives; Short Brothers Model SD3–60, SD3–60 SHERPA, and SD3–SHERPA Series Airplanes

AGENCY: Federal Aviation Administration, DOT.

ACTION: Final rule.

SUMMARY: This amendment adopts a new airworthiness directive (AD), applicable to all Short Brothers Model SD3–60, SD3–60 SHERPA, and SD3–SHERPA series airplanes, that requires a one-time inspection of the wiring harness and power cables of the heated windshield to detect inadequate clearance, inadequate support, or chafing. This amendment also requires corrective action (including re-routing for adequate clearance or replacing damaged cables, as applicable), if necessary. The actions specified by this AD are intended to prevent chafing or damage of the power cables of the heated windshield, which could cause arcing and result in smoke and fire in the cockpit. This action is intended to address the identified unsafe condition.

DATES: Effective March 27, 2002.

The incorporation by reference of certain publications listed in the regulations is approved by the Director of the Federal Register as of March 27, 2002.

ADDRESSES: The service information referenced in this AD may be obtained from Short Brothers, Airworthiness & Engineering Quality, P.O. Box 241, Airport Road, Belfast BT3 9DZ, Northern Ireland. This information may be examined at the Federal Aviation Administration (FAA), Transport Airplane Directorate, Rules Docket, 1601 Lind Avenue, SW., Renton, Washington; or at the Office of the Federal Register, 800 North Capitol Street, NW., suite 700, Washington, DC.

FOR FURTHER INFORMATION CONTACT: Todd Thompson, Aerospace Engineer, International Branch, ANM–116, FAA, Transport Airplane Directorate, 1601 Lind Avenue, SW., Renton, Washington, 98055–4056; telephone (425) 227–1175; fax (425) 227–1149.

SUPPLEMENTARY INFORMATION: A proposal to amend part 39 of the Federal Aviation Regulations (14 CFR part 39) to include an airworthiness directive (AD) that is applicable to all Short Brothers Model SD3–60, SD3–60 SHERPA, and SD3-SHERPA series airplanes was published in the **Federal Register** on November 23, 2001 (66 FR 58680). That action proposed to require a one-time inspection of the two power cables to the heated windshield to detect inadequate clearance, chafing, and inadequate support. The action also proposed to require corrective action, if necessary, including increasing the clearance, providing additional support, re-routing, and replacing power cables, as applicable.

Comments

Interested persons have been afforded an opportunity to participate in the making of this amendment. No comments were submitted in response to the proposal or the FAA's determination of the cost to the public.

Explanation of Changes to Final Rule

The statement of unsafe condition in the ''Summary'' section and subsequent sections of this AD have been changed for clarification to include a reference to the wiring harness of the power cables and to clarify certain wording.

Paragraph (a) of the proposed rule specifies a general visual inspection of the power cables to the heated windshield to detect inadequate clearance, chafing, and inadequate support. However, paragraph (a) of the proposed rule does not make clear that the inspection includes inspecting the wiring harness and ensuring that the harness is securely supported. Therefore, for clarification, we have changed paragraph (a) of this final rule to require a general visual inspection of the wiring harness and power cables of the heated windshield to detect inadequate clearance between the cables and the flight instruments, and to ensure that the harness is securely supported and no chafing of the protective cover on the cables is evident.

In addition, we have changed paragraphs (b), (c), and (d) of the proposed rule to paragraphs (a)(1), (a)(2), and (a)(3) in this final rule, as they are subparagraphs of paragraph (a), and we have clarified certain wording in those paragraphs. We find that these changes do not expand the scope of the proposed AD but merely provide clarification of the requirements of this AD.

Conclusion

After careful review of the available data, the FAA has determined that air safety and the public interest require the adoption of the rule with the changes described previously. The FAA has determined that these changes will neither increase the economic burden on any operator nor increase the scope of the AD.

Cost Impact

The FAA estimates that 78 airplanes of U.S. registry will be affected by this AD, that it will take approximately 1 work hour per airplane to accomplish the required inspection, and that the average labor rate is $60 per work hour. Based on these figures, the cost impact of the AD on U.S. operators is estimated to be $4,680, or $60 per airplane.

The cost impact figure discussed above is based on assumptions that no operator has yet accomplished any of the requirements of this AD action, and that no operator would accomplish those actions in the future if this AD were not adopted. The cost impact figures discussed in AD rulemaking actions represent only the time necessary to perform the specific actions actually required by the AD. These figures typically do not include incidental costs, such as the time required to gain access and close up, planning time, or time necessitated by other administrative actions.

Regulatory Impact

The regulations adopted herein will not have a substantial direct effect on the States, on the relationship between the national Government and the States, or on the distribution of power and responsibilities among the various levels of government. Therefore, it is determined that this final rule does not have federalism implications under Executive Order 13132.

For the reasons discussed above, I certify that this action (1) is not a ''significant regulatory action'' under Executive Order 12866; (2) is not a ''significant rule'' under DOT Regulatory Policies and Procedures (44 FR 11034, February 26, 1979); and (3) will not have a significant economic impact, positive or negative, on a substantial number of small entities under the criteria of the Regulatory Flexibility Act. A final evaluation has been prepared for this action and it is contained in the Rules Docket. A copy of it may be obtained from the Rules Docket at the location provided under the caption **ADDRESSES**.

List of Subjects in 14 CFR Part 39

Air transportation, Aircraft, Aviation safety, Incorporation by reference, Safety.

Adoption of the Amendment

Accordingly, pursuant to the authority delegated to me by the Administrator, the Federal Aviation Administration amends part 39 of the Federal Aviation Regulations (14 CFR part 39) as follows:

PART 39—AIRWORTHINESS DIRECTIVES

1. The authority citation for part 39 continues to read as follows:

Authority: 49 U.S.C. 106(g), 40113, 44701.

§ 39.13 [Amended]

2. Section 39.13 is amended by adding the following new airworthiness directive:

2002–03–13 Short Brothers PLC: Amendment 39–12654. Docket 2001–NM–143–AD.

Applicability: All Model SD3–60, SD3–60 SHERPA, and SD3–SHERPA series airplanes; certificated in any category.

Note 1: This AD applies to each airplane identified in the preceding applicability provision, regardless of whether it has been modified, altered, or repaired in the area subject to the requirements of this AD. For airplanes that have been modified, altered, or repaired so that the performance of the requirements of this AD is affected, the owner/operator must request approval for an alternative method of compliance in accordance with paragraph (b) of this AD. The request should include an assessment of the effect of the modification, alteration, or repair on the unsafe condition addressed by this AD; and, if the unsafe condition has not been eliminated, the request should include specific proposed actions to address it.

Compliance: Required as indicated, unless accomplished previously.

To prevent chafing or damage of the power cables of the heated windshield, which could cause arcing and result in smoke and fire in the cockpit, accomplish the following:

Inspection and Corrective Action

(a) Within 90 days after the effective date of this AD: Perform a general visual inspection of the wiring harness and power cables of the heated windshield to detect inadequate clearance between the cables and the flight instruments, and to ensure that the harness is securely supported and no chafing of the protective cover on the cables is evident, in accordance with Short Brothers Service Bulletin SD3 SHERPA–30–2 (for Model SD3 SHERPA series airplanes), SD360 SHERPA–30–2 (for Model SD3–60 SHERPA series airplanes), or SD360–30–26 (for Model SD3–60 series airplanes); all dated April 2, 2001; as applicable. If no evidence of chafing is found and clearance and support of the power cables is adequate, no further action is needed.

Note 2: For the purposes of this AD, a general visual inspection is defined as: ''A visual examination of an interior or exterior area, installation, or assembly to detect obvious damage, failure, or irregularity. This level of inspection is made under normally available lighting conditions such as daylight, hangar lighting, flashlight, or drop-light, and may require removal or opening of access panels or doors. Stands, ladders, or platforms may be required to gain proximity to the area being checked.''

(1) If no evidence of chafing is found, but clearance or support of the harness is inadequate: Prior to further flight, re-route the power cable for adequate clearance or provide additional support of the cable harness, as applicable, in accordance with Short Brothers Service Bulletin SD3 SHERPA–30–2 (for Model SD3 SHERPA series airplanes), SD360 SHERPA–30–2 (for Model SD3–60 SHERPA series airplanes), or SD360–30–26 (for Model SD3–60 series airplanes); all dated April 2, 2001; as applicable.

(2) If evidence of chafing is found, but there is no damage to the outer nylon protective cover resulting in exposure of the glass fiber braid: Prior to further flight, re-route the power cables for adequate clearance, in accordance with Short Brothers Service Bulletin SD3 SHERPA–30–2 (for Model SD3 SHERPA series airplanes), SD360 SHERPA–30–2 (for Model SD3–60 SHERPA series airplanes), or SD360–30–26 (for Model SD3–60 series airplanes); all dated April 2, 2001; as applicable.

(3) If evidence of chafing is found, and there is damage to the outer nylon protective cover resulting in exposure of the glass fiber braid: Prior to further flight, replace the damaged power cable with a new cable, in accordance with Short Brothers Service Bulletin SD3 SHERPA–30–2 (for Model SD3 SHERPA series airplanes), SD360 SHERPA–30–2 (for Model SD3–60 SHERPA series airplanes), or SD360–30–26 (for Model SD3–60 series airplanes); all dated April 2, 2001; as applicable.

Alternative Methods of Compliance

(b) An alternative method of compliance or adjustment of the compliance time that provides an acceptable level of safety may be used if approved by the Manager, International Branch, ANM–116, Transport Airplane Directorate, FAA. Operators shall submit their requests through an appropriate FAA Principal Maintenance Inspector, who may add comments and then send it to the Manager, International Branch, ANM–116.

Note 3: Information concerning the existence of approved alternative methods of compliance with this AD, if any, may be obtained from the International Branch, ANM–116.

Special Flight Permits

(c) Special flight permits may be issued in accordance with sections 21.197 and 21.199 of the Federal Aviation Regulations (14 CFR 21.197 and 21.199) to operate the airplane to a location where the requirements of this AD can be accomplished.

Incorporation by Reference

(d) The actions shall be done in accordance with Short Brothers Service Bulletin SD3 SHERPA–30–2, dated April 2, 2001; Short Brothers Service Bulletin SD360 SHERPA–30–2, dated April 2, 2001; and Short Brothers Service Bulletin SD360–30–26, dated April 2, 2001; as applicable. This incorporation by reference was approved by the Director of the Federal Register in accordance with 5 U.S.C. 552(a) and 1 CFR part 51. Copies may be obtained from Short Brothers, Airworthiness & Engineering Quality, P.O. Box 241, Airport Road, Belfast BT3 9DZ, Northern Ireland. Copies may be inspected at the FAA, Transport Airplane Directorate, 1601 Lind Avenue, SW., Renton, Washington; or at the Office of the Federal Register, 800 North Capitol Street, NW., suite 700, Washington, DC.

Note 4: The subject of this AD is addressed in British airworthiness directive 001–04–2001.

Effective Date

(e) This amendment becomes effective on March 27, 2002.

Issued in Renton, Washington, on February 7, 2002.

Vi L. Lipski,

Manager, Transport Airplane Directorate, Aircraft Certification Service.

[FR Doc. 02–3587 Filed 2–19–02; 8:45 am]

BILLING CODE 4910–13–P

DEPARTMENT OF TRANSPORTATION

Federal Aviation Administration

14 CFR Part 39

[Docket No. 2001–NM–185–AD; Amendment 39–12656; AD 2002–03–15]

RIN 2120–AA64

Airworthiness Directives; Dornier Model 328–100 and –300 Series Airplanes

AGENCY: Federal Aviation Administration, DOT.

ACTION: Final rule.

SUMMARY: This amendment adopts a new airworthiness directive (AD), applicable to certain Dornier Model 328–100 and –300 series airplanes, that requires testing of the left- and right-hand potentiometer levers of the aileron flight control system, and follow-on or corrective action, as applicable. This amendment is necessary to prevent detachment of an aileron potentiometer lever, which could result in jamming of the elevator and/or aileron flight control systems and consequent reduced controllability of the airplane. This action is intended to address the identified unsafe condition.

DATES: Effective March 27, 2002.

The incorporation by reference of certain publications listed in the regulations is approved by the Director of the Federal Register as of March 27, 2002.

ADDRESSES: The service information referenced in this AD may be obtained from **Fairchild Dornier, Dornier** Luftfahrt GmbH, P.O. Box 1103, D–82230 Wessling, Germany. This information may be examined at the FAA, Transport Airplane Directorate, 1601 Lind Avenue, SW., Renton, Washington; or at the Office of the Federal Register, 800 North Capitol Street, NW., suite 700, Washington, DC.

FOR FURTHER INFORMATION CONTACT: Tom Groves, Aerospace Engineer, International Branch, ANM–116, FAA, Transport Airplane Directorate, 1601 Lind Avenue, SW., Renton, Washington 98055–4056; telephone (425) 227–1503; fax (425) 227–1149.

SUPPLEMENTARY INFORMATION: A proposal to amend part 39 of the Federal Aviation Regulations (14 CFR part 39) to include an airworthiness directive (AD) that is applicable to certain Dornier Model 328–100 and –300 series airplanes was published in the **Federal Register** on September 25, 2001 (66 FR 48989). That action proposed to require testing of the left- and right-hand potentiometer levers of the aileron flight

control system, and follow-on or corrective action, as applicable.

Public Comments

Interested persons have been afforded an opportunity to participate in the making of this amendment. Due consideration has been given to the single comment received.

Request To Revise Paragraph (c)(2) of the Proposed Rule

One commenter, the airplane manufacturer, states that a new potentiometer lever, having part number (P/N) 001A271A2062 002, has been developed and approved. The new lever prevents detachment of an aileron potentiometer lever, which could result in jamming of the elevator and/or aileron flight control systems. The FAA infers that the commenter is requesting that the FAA add the new lever P/N to paragraph (c) of the proposed rule.

The FAA agrees. We have revised paragraph (c)(1) and (c)(2) of the AD to permit operators to comply with the requirements of that paragraph by replacing the potentiometer lever with a new lever, P/N 001A271A2062 002, or with P/N 001A271A2062 000, which was the ''new'' lever P/N at the time the NPRM was issued. Although the lever P/Ns were not referred to in the NPRM, we have added them to the final rule to help clarify and differentiate the description of a ''new'' potentiometer lever. Paragraph (c)(2) of the final rule has also been revised to specify that operators may replace the potentiometer levers by using either the method provided by subparagraph (c)(2)(i) or (c)(2)(ii) of the final rule.

Conclusion

After careful review of the available data, including the comment noted above, the FAA has determined that air safety and the public interest require the adoption of the rule with the changes described previously. The FAA has determined that these changes will neither increase the economic burden on any operator nor increase the scope of the AD.

Cost Impact

The FAA estimates that 89 Dornier Model 328–100 and –300 series airplanes of U.S. registry will be affected by this AD, that it will take approximately 2 work hours per airplane to accomplish the required test, and that the average labor rate is $60 per work hour. Based on these figures, the cost impact of the AD on U.S. operators is estimated to be $10,680, or $120 per airplane, per test cycle.

The cost impact figure discussed above is based on assumptions that no operator has yet accomplished any of the requirements of this AD action, and that no operator would accomplish those actions in the future if this AD were not adopted. The cost impact figures discussed in AD rulemaking actions represent only the time necessary to perform the specific actions actually required by the AD. These figures typically do not include incidental costs, such as the time required to gain access and close up, planning time, or time necessitated by other administrative actions.

Regulatory Impact

The regulations adopted herein will not have a substantial direct effect on the States, on the relationship between the national Government and the States, or on the distribution of power and responsibilities among the various levels of government. Therefore, it is determined that this final rule does not have federalism implications under Executive Order 13132.

For the reasons discussed above, I certify that this action (1) is not a ''significant regulatory action'' under Executive Order 12866; (2) is not a ''significant rule'' under DOT Regulatory Policies and Procedures (44 FR 11034, February 26, 1979); and (3) will not have a significant economic impact, positive or negative, on a substantial number of small entities under the criteria of the Regulatory Flexibility Act. A final evaluation has been prepared for this action and it is contained in the Rules Docket. A copy of it may be obtained from the Rules Docket at the location provided under the caption **ADDRESSES**.

List of Subjects in 14 CFR Part 39

Air transportation, Aircraft, Aviation safety, Incorporation by reference, Safety.

Adoption of the Amendment

Accordingly, pursuant to the authority delegated to me by the Administrator, the Federal Aviation Administration amends part 39 of the Federal Aviation Regulations (14 CFR part 39) as follows:

PART 39—AIRWORTHINESS DIRECTIVES

1. The authority citation for part 39 continues to read as follows:

Authority: 49 U.S.C. 106(g), 40113, 44701.

§ 39.13 [Amended]

2. Section 39.13 is amended by adding the following new airworthiness directive:

2002–03–15 Dornier Luftfahrt GMBH: Amendment 39–12656. Docket 2001–NM–185–AD.

Applicability: Model 328–100 airplanes, serial numbers 3005 through 3119 inclusive, on which Dornier Service Bulletin SB–328–27–319, dated June 26, 2000, or Revision 1, dated September 27, 2000, has been accomplished; and Model 328–300 series airplanes, serial numbers 3105 through 3184 inclusive; certificated in any category.

Note 1: This AD applies to each airplane identified in the preceding applicability provision, regardless of whether it has been modified, altered, or repaired in the area subject to the requirements of this AD. For airplanes that have been modified, altered, or repaired so that the performance of the requirements of this AD is affected, the owner/operator must request approval for an alternative method of compliance in accordance with paragraph (d) of this AD. The request should include an assessment of the effect of the modification, alteration, or repair on the unsafe condition addressed by this AD; and, if the unsafe condition has not been eliminated, the request should include specific proposed actions to address it.

Compliance: Required as indicated, unless accomplished previously.

To prevent detachment of the aileron potentiometer lever, which could result in jamming of the elevator and/or aileron flight control systems and reduced controllability of the airplane, accomplish the following:

Testing and Corrective Action

(a) Within 30 days after the effective date of this AD, test the left- and right-hand potentiometer levers of the aileron flight control system to determine whether, with the bolt in position and the clamping force across the splines relaxed, the levers can be pulled off the splined shaft, in accordance with the Dornier service bulletin listed in paragraph (a)(1) or (a)(2) of this AD, as applicable.

(1) *For Dornier Model 328–100 series airplanes:* Accomplishment Instructions, ''Aileron System,'' of Dornier Service Bulletin SB–328–27–359, dated March 29, 2001.

(2) *For Dornier Model 328–300 series airplanes:* Accomplishment Instructions, ''Aileron System,'' of Dornier Service Bulletin SB–328J–27–064, Revision 1, dated April 12, 2001.

(b) If, as a result of the test required by paragraph (a) of this AD, any lever cannot be removed, before further flight, retighten the nut and bolt and replace the split pin, in accordance with the Dornier service bulletin listed in paragraph (a)(1) or (a)(2) of this AD, as applicable.

(c) If, as a result of the test required by paragraph (a) of this AD, any lever can be detached from the splined shaft, perform the actions specified in paragraph (c)(1) or (c)(2) of this AD, as applicable.

(1) If a potentiometer lever having either part number (P/N) 001A271A2062 000 or

001A271A2062 002 is available from stock or from the airplane manufacturer, before further flight, replace the defective lever with a new lever having either P/N 001A271A2062 000 or 001A271A2062 002; in accordance with the Dornier service bulletin listed in paragraph (a)(1) or (a)(2) of this AD, as applicable. After the installation of the new lever and before further flight, test the new lever as required in paragraph (a) of this AD.

(2) If a potentiometer lever is not available from stock or from the airplane manufacturer, before further flight, reassemble the existing lever with loctite, in accordance with the Dornier service bulletin listed in paragraph (a)(1) or (a)(2) of this AD, as applicable and, within 4,000 flight hours or 24 months after the effective date of this AD, whichever comes first, replace the lever with a new lever having P/N 001A271A2062 000 or 001A271A2062 002; in accordance with a method specified in paragraph (c)(2)(i) or (c)(2)(ii) of this AD.

(i) In accordance with a method approved by either the Manager, International Branch, ANM–116, FAA; or the Luftfahrt-Bundesamt (LBA) (or its delegated agent).

(ii) In accordance with the Dornier service bulletin specified in paragraph (a)(1) or (a)(2) of this AD, as applicable.

Alternative Methods of Compliance

(d) An alternative method of compliance or adjustment of the compliance time that provides an acceptable level of safety may be used if approved by the Manager, International Branch, ANM–116. Operators shall submit their requests through an appropriate FAA Principal Maintenance Inspector, who may add comments and then send it to the Manager, International Branch, ANM–116.

Note 2: Information concerning the existence of approved alternative methods of compliance with this AD, if any, may be obtained from the International Branch, ANM–116.

Special Flight Permits

(e) Special flight permits may be issued in accordance with sections 21.197 and 21.199 of the Federal Aviation Regulations (14 CFR 21.197 and 21.199) to operate the airplane to a location where the requirements of this AD can be accomplished.

Incorporation by Reference

(f) Except as provided by paragraph (c)(2)(i) of this AD, the actions shall be done in accordance with Dornier Service Bulletin SB–328–27–359, dated March 29, 2001; or Dornier Service Bulletin SB–328J–27–064, Revision 1, dated April 12, 2001; as applicable. This incorporation by reference was approved by the Director of the Federal Register in accordance with 5 U.S.C. 552(a) and 1 CFR part 51. Copies may be obtained from **Fairchild Dornier, Dornier** Luftfahrt GmbH, P.O. Box 1103, D–82230 Wessling, Germany. Copies may be inspected at the FAA, Transport Airplane Directorate, 1601 Lind Avenue, SW., Renton, Washington; or at the Office of the Federal Register, 800 North Capitol Street, NW., suite 700, Washington, DC.

Note 3: The subject of this AD is addressed in German airworthiness directive 2001–167/2, dated June 28, 2001, and German airworthiness directive 2001–168, dated June 14, 2001.

Effective Date

(g) This amendment becomes effective on March 27, 2002.

Issued in Renton, Washington, on February 8, 2002.

Ali Bahrami,

Acting Manager, Transport Airplane Directorate, Aircraft Certification Service.

[FR Doc. 02–3612 Filed 2–19–02; 8:45 am]

BILLING CODE 4910–13–P

DEPARTMENT OF TRANSPORTATION

Federal Aviation Administration

14 CFR Part 39

[Docket No. 2000–NE–14–AD; Amendment 39–12650; AD 2002–03–09]

RIN 2120–AA64

Airworthiness Directives; Honeywell International Inc. (Formerly AlliedSignal Inc. and Textron Lycoming) LTS101 Series Turboshaft and LTP101 Series Turboprop Engines

AGENCY: Federal Aviation Administration, DOT.

ACTION: Final rule.

SUMMARY: This amendment adopts a new airworthiness directive (AD), that is applicable to Honeywell International Inc. (formerly AlliedSignal Inc. and Textron Lycoming) LTS101 series turboshaft and LTP101 series turboprop engines. This amendment requires a one-time visual inspection for surface finish and a one-time fluorescent penetrant inspection for cracks of certain impellers installed on LTS101 series turboshaft and LTP101 series turboprop engines. This amendment is prompted by a report of a machining discrepancy that may have occurred during manufacture of the affected impellers. The actions specified by this AD are intended to prevent impeller failure from cracks in the impeller back face area, which could result in an uncontained engine failure.

DATES: Effective date March 27, 2002.

The incorporation by reference of certain publications listed in the regulations is approved by the Director of the Federal Register as of March 27, 2002.

ADDRESSES: The service information referenced in this AD may be obtained from Honeywell International Inc. Aerospace Services Attn.: Data Distribution, M/S 64–3/2101–201, PO Box 29003, Phoenix, AZ 85038–9003; telephone (602) 365–2493, fax (602) 365–5577. This information may be examined, by appointment, at the Federal Aviation Administration (FAA), New England Region, Office of the Regional Counsel, 12 New England Executive Park, Burlington, MA; or at the Office of the Federal Register, 800 North Capitol Street, NW., suite 700, Washington, DC.

FOR FURTHER INFORMATION CONTACT: Robert Baitoo, Aerospace Engineer, Los Angeles Aircraft Certification Office, FAA, Transport Airplane Directorate, 3960 Paramount Blvd., Lakewood, CA 90712–4137; telephone (562) 627–5245, fax (562) 627–5210.

SUPPLEMENTARY INFORMATION: A proposal to amend part 39 of the Federal Aviation Regulations (14 CFR part 39) to include an AD that is applicable to Honeywell International Inc. (formerly AlliedSignal Inc. and Textron Lycoming) LTS101 series turboshaft and LTP101 series turboprop engines was published in the **Federal Register** on October 29, 2001 (66 FR 54463). That action proposed to require a one-time visual inspection for surface finish and a one-time fluorescent penetrant inspection for cracks of certain impellers installed on LTS101 series turboshaft and LTP101 series turboprop engines in accordance with AlliedSignal Service Bulletin (SB) LT 101–72–30–0186, dated October 1, 1999, or Honeywell International Inc. SB LT 101–72–30–0186, Revision 1, dated April 25, 2000.

Comments

Interested persons have been afforded an opportunity to participate in the making of this amendment. No comments were received on the proposal or the FAA's determination of the cost to the public. The FAA has determined that air safety and the public interest require the adoption of the rule as proposed.

Economic Analysis

The FAA estimates that 600 engines installed on aircraft of U.S. registry would be affected by this AD and that it would take approximately 4 work hours per engine to accomplish the inspection. The average labor rate is $60 per work hour. There are no required parts costs. Based on these figures, the total cost effect of this AD on U.S. operators is estimated to be $144,000.

Regulatory Analysis

This final rule does not have federalism implications, as defined in Executive Order 13132, because it would not have a substantial direct

effect on the States, on the relationship between the national government and the States, or on the distribution of power and responsibilities among the various levels of government. Accordingly, the FAA has not consulted with state authorities prior to publication of this final rule.

For the reasons discussed above, I certify that this action (1) is not a ''significant regulatory action'' under Executive Order 12866; (2) is not a ''significant rule'' under the DOT Regulatory Policies and Procedures (44 FR 11034, February 26, 1979); and (3) if promulgated, will not have a significant economic impact, positive or negative, on a substantial number of small entities under the criteria of the Regulatory Flexibility Act. A final evaluation has been prepared for this action and it is contained in the Rules Docket. A copy of it may be obtained by contacting the Rules Docket at the location provided under the caption **ADDRESSES**.

List of Subjects in 14 CFR Part 39

Air transportation, Aircraft, Aviation safety, Incorporation by reference, Safety.

Adoption of the Amendment

Accordingly, pursuant to the authority delegated to me by the Administrator, the Federal Aviation Administration amends part 39 of the Federal Aviation Regulations (14 CFR part 39) as follows:

PART 39—AIRWORTHINESS DIRECTIVES

1. The authority citation for part 39 continues to read as follows:

Authority: 49 U.S.C. 106(g), 40113, 44701.

§ 39.13 [Amended]

2. Section 39.13 is amended by adding a new airworthiness directive to read as follows:

2002–03–09 Honeywell International Inc.: Amendment 39–12650. Docket No. 2000–NE–14–AD.

Applicability

This airworthiness directive (AD) is applicable to Honeywell International Inc. (formerly AlliedSignal Inc. and Textron Lycoming) LTS101 series turboshaft and LTP101 series turboprop engines with the following centrifugal compressor impeller part numbers (P/N's) installed: 4–101–052–57 and 4–101–052–62, except those with a P/N or serial number (SN) listed in paragraphs 1.A.(1) through 1.A.(3) of AlliedSignal Service Bulletin (SB) LT 101–72–30–0186, dated October 1, 1999, or Honeywell International Inc. SB LT 101–72–30–0186, Revision 1, dated April 25, 2000. These engines are installed on, but not limited to Aerospatiale AS350, Eurocopter MBB–BK117 and HH–65A, Bell 222, Page Thrush, Air Tractor AT–302, Piaggio P.166–DL3, Riley International R421, and Pacific Aero 08–600 aircraft.

Note 1: This AD applies to each engine identified in the preceding applicability provision, regardless of whether it has been modified, altered, or repaired in the area subject to the requirements of this AD. For engines that have been modified, altered, or repaired so that the performance of the requirements of this AD is affected, the owner/operator must request approval for an alternative method of compliance in accordance with paragraph (d) of this AD. The request should include an assessment of the effect of the modification, alteration, or repair on the unsafe condition addressed by this AD; and, if the unsafe condition has not been eliminated, the request should include specific proposed actions to address it.

Compliance

Compliance with this AD is required as indicated, unless already done.

To prevent impeller failure from cracks in the impeller back face area, which could result in an uncontained engine failure, do the following:

(a) Within 900 gas generator (Ng) cycles after the effective date of this AD, conduct a one-time visual inspection for surface finish and fluorescent penetrant inspection of impellers P/N 4–101–052–57 and 4–101–052–62 for cracks in accordance with paragraphs 3.A through 3.F. of the Accomplishment Instructions of AlliedSignal SB LT 101–72–30–0186, dated October 1, 1999, or Honeywell International Inc. SB LT 101–72–30–0186, Revision 1, dated April 25, 2000.

(b) Replace all impellers that exceed the acceptable limits of the Accomplishment Instructions of AlliedSignal Service Bulletin (SB) LT 101–72–30–0186, dated October 1, 1999, or Honeywell International Inc. SB LT 101–72–30–0186, Revision 1, dated April 25, 2000, with a serviceable impeller.

(c) After the effective date of this AD, do not install impeller P/N's 4–101–052–57 or 4–101–052–62, except those with an impeller P/N or SN listed in paragraphs 1. A.(1) through 1. A.(3) of AlliedSignal SB LT 101–72–30–0186, dated October 1, 1999, or Honeywell International Inc. SB LT 101–72–30–0186, Revision 1, dated April 25, 2000.

Alternative Methods of Compliance

(d) An alternative method of compliance or adjustment of the compliance time that provides an acceptable level of safety may be used if approved by the Manager, Los Angles Aircraft Certification Office (LAACO). Operators must submit their request through an appropriate FAA Principal Maintenance Inspector, who may add comments and then send it to the Manager, LAACO.

Note 2: Information concerning the existence of approved alternative methods of compliance with this airworthiness directive, if any, may be obtained from the LAACO.

Special Flight Permits

(e) Special flight permits may be issued in accordance §§ 21.197 and 21.199 of the Federal Aviation Regulations (14 CFR 21.197 and 21.199) to operate the aircraft to a location where the requirements of this AD can be done.

Documents That Have Been Incorporated by Reference

(f) The inspections must be done in accordance with the following SB's:

Document No.	Pages	Revision	Date
AlliedSignal SB LT 101–72–30–0186	All	Original	Oct. 1, 1999.
Total pages: 7			
Honeywell International Inc. SB LT 101–72–30–0186	1	Original	Oct. 1, 1999.
	2	1	Apr. 25, 2000.
	3–6	Original	Oct. 1, 1999.
	7	1	Apr. 25, 2000.
Total pages: 7			

This incorporation by reference was approved by the Director of the Federal Register in accordance with 5 U.S.C. 552(a) and 1 CFR part 51. Copies may be obtained from Honeywell International Inc. Aerospace Services Attn.: Data Distribution, M/S 64–3/2101–201, PO Box 29003, Phoenix, AZ 85038–9003; telephone (602) 365–2493, fax (602) 365–5577. Copies may be inspected, by appointment, at the FAA, New England Region, Office of the Regional Counsel, 12 New England Executive Park, Burlington, MA; or at the Office of the Federal Register, 800 North Capitol Street, NW, suite 700, Washington, DC.

Effective Date

(g) This amendment becomes effective on March 27, 2002.

Issued in Burlington, Massachusetts, on February 5, 2002.

Jay J. Pardee,

Manager, Engine and Propeller Directorate, Aircraft Certification Service.

[FR Doc. 02–3578 Filed 2–19–02; 8:45 am]

BILLING CODE 4910–13–P

DEPARTMENT OF COMMERCE

National Oceanic and Atmospheric Administration

15 CFR Part 909

[Docket No. 011219305–1305–01]

RIN 0648–AP77

Regulations Relating to Disclosure of Information and Employee Testimony in Litigation; Removal of Obsolete Regulations

AGENCY: National Oceanic and Atmospheric Administration, Department of Commerce.

ACTION: Final rule.

SUMMARY: The National Oceanic and Atmospheric Administration (NOAA) issues this final rule to remove and reserve regulations concerning the policies and procedures relating to the disclosure of information and employee testimony in litigation not involving the United States. These regulations are removed because they have been superseded by other regulations. The intended effect is to ensure that NOAA policies and procedures are consistent and not redundant with other regulations of the Department of Commerce.

DATES: Effective February 20, 2002.

FOR FURTHER INFORMATION CONTACT: Glenn E. Tallia, NOAA Senior Counselor for Atmospheric and Space Services and Research (GCW), SSMC 3, Mail Stop 15861, 1315 East-West Highway, Silver Spring, MD 20910; (301) 713–1337.

SUPPLEMENTARY INFORMATION:

Background

NOAA issues this final rule to remove provisions from its internal conduct regulations, codified at 15 CFR part 909. This part contains policies and procedures regarding disclosure of information and employee testimony in litigation not involving the United States. This part is removed and reserved because it has been superseded by regulations on the same topic promulgated by the Department of Commerce, and codified at 15 CFR part 15, subpart B.

Classification

Executive Order 12866

This final rule has been determined to be not significant for purposes of E.O. 12866.

Administrative Procedure Act

Pursuant to 5 U.S.C. 553(b)(A), prior notice and an opportunity for public comment and not required for this rule of agency organization, management and procedures. Further, this rule of agency organization, management and procedures is not a substantive rule, and is therefore not subject to the 30-day delay in effective date requirement of 5 U.S.C. 553(d).

Regulatory Flexibility Act

As this rule is not subject to the requirement to provide prior notice and an opportunity for public comment pursuant to 5 U.S.C. 553, or any other law, it is not subject to the analytical requirements of the Regulatory Flexibility Act, 5 U.S.C. 601 *et seq.*

Paperwork Reduction Act

This rule does not contain or involve any information collection requirements that require the approval of the Office of Management and Budget pursuant to the Paperwork Reduction Act, 44 U.S.C. chapter 35.

List of Subjects in 15 CFR Part 909

Courts, Government employees.

Accordingly, for the reasons set forth in the preamble and under the authority contained in 5 U.S.C. 301; 15 U.S.C. 1501, 1512, 1513, 1515 and 1518; Reorganization Plan No. 5 of 1950; 3 CFR, 1949–1953 Comp., p. 1004; and 44 U.S.C. 3101; remove and reserve 15 CFR part 909.

Dated: February 14, 2002.

Craig R. O'Connor,

Acting General Counsel, NOAA.

[FR Doc. 02–4058 Filed 2–19–02; 8:45 am]

BILLING CODE 3510–12–M

DEPARTMENT OF TRANSPORTATION

Coast Guard

33 CFR Part 165

[COTP San Francisco Bay 01–012]

RIN 2115–AA97

Security Zones; San Francisco Bay, San Francisco, CA

AGENCY: Coast Guard, DOT.

ACTION: Temporary final rule.

SUMMARY: The Coast Guard is establishing moving and fixed security zones extending 100 yards around all cruise ships and tank ships that enter, are moored in, or depart from the San Francisco Bay and Delta ports, California. This security zone is needed for national security reasons to protect the public and ports from potential subversive acts. Entry into these security zones is prohibited, unless specifically authorized by the Captain of the Port San Francisco Bay, or his designated representative.

DATES: The regulation is effective from 11:59 p.m. PST on December 21, 2001 to 11:59 p.m. PDT on June 21, 2002.

ADDRESSES: Documents indicated in this preamble as being available in the docket are part of docket COTP San Francisco Bay 01–012 and are available for inspection or copying at Coast Guard Marine Safety Office San Francisco Bay, Coast Guard Island, Alameda, California, 94501, between 9 a.m. and 4 p.m., Monday through Friday, except Federal holidays.

FOR FURTHER INFORMATION CONTACT: Lieutenant Ross Sargent, U.S. Coast Guard Marine Safety Office San Francisco Bay, at (510) 437–3073.

SUPPLEMENTARY INFORMATION:

Regulatory Information

We did not publish a notice of proposed rulemaking (NPRM) for this regulation. Under 5 U.S.C. 553(b), the Coast Guard finds that good cause exists for not publishing an NPRM. On September 11, 2001, two commercial aircraft were hijacked and flown into the World Trade Center in New York, New York, inflicting catastrophic human casualties and property damage. A similar attack was inflicted upon the Pentagon in Arlington, Virginia, while a fourth commercial aircraft was hijacked and crashed in rural western Pennsylvania on the same day. National security and intelligence officials warn that future terrorist attacks against civilian targets may be anticipated. Due to the potential catastrophic impact of an attack on cruise ships and tank ships, this rulemaking is urgently required to prevent possible terrorist strikes against these vessels within San Francisco Bay and Delta ports. The delay inherent in the NPRM process is contrary to the public interest insofar as it would render cruise ships and tank ships in San Francisco and Delta ports vulnerable to subversive activity, sabotage and terrorist attack.

For the same reasons, under 5 U.S.C. 553(d)(3), the Coast Guard finds that good cause exists for making this rule effective less than 30 days after publication in the **Federal Register**.

Background and Purpose

Based on the September 11, 2001, terrorist hijackings and attacks on the World Trade Center in New York, the Pentagon in Arlington, Virginia, there is an increased risk that subversive activity could be launched by vessels or persons in close proximity to the San Francisco Bay and Delta ports, against cruise ships and tank ships entering, departing, or moored within the San Francisco Bay and Delta ports. The terrorist acts against the United States on September 11, 2001, have increased the need for safety and security measures on U.S. ports and waterways.

In response to these terrorist acts, and in order to prevent similar occurrences, the Coast Guard has established a security zone around cruise ships and tank ships to protect persons, transiting vessels, adjacent waterfront facilities, and the adjacent land of the San Francisco Bay and Delta ports. These security zones are necessary to prevent damage or injury to any vessel or waterfront facility, and to safeguard ports, harbors, or waters of the United States near the San Francisco Bay and Delta, California.

This zone will be enforced by the official patrol (Coast Guard commissioned, warrant or petty officers) onboard Coast Guard vessels and patrol craft. The official patrol may also be onboard patrol craft and resources of any government agency that has agreed to assist the Coast Guard in the performance of its duties. Persons and vessels are prohibited from entering into this security zone unless authorized by the Captain of the Port (COTP) or his designated representative. Each person and vessel in a security zone shall obey any direction or order of the COTP. The COTP may remove any person, vessel, article, or thing from a security zone. No person may board, or take or place any article or thing on board any vessel in a security zone without the permission of the COTP.

Pursuant to 33 U.S.C. 1232, any violation of the security zone described herein, is punishable by civil penalties (not to exceed $27,500 per violation, where each day of a continuing violation is a separate violation), criminal penalties (imprisonment for not more than 6 years and a fine of not more than $250,000), in rem liability against the offending vessel, and license sanctions. Any person who violates this regulation, using a dangerous weapon, or who engages in conduct that causes bodily injury or fear of imminent bodily injury to any officer authorized to enforce this regulation, also faces imprisonment up to 12 years (class C felony).

This security zone prohibits all vessels and people from approaching cruise ships and tank ships that are underway or moored in the San Francisco Bay and Delta ports. Specifically, no vessel or person may close to within 100 yards of a cruise ship or tank ship that is entering, moored, or departing the San Francisco Bay and Delta ports.

A security zone is automatically activated when a cruise ship or tank ship passes a line drawn between San Francisco Main Ship Channel buoys 7 and 8 (LLNR 4190 & 4195, positions 37°46.9′N, 122°35.4′W & 37°46.5′N, 122°35.2′W, respectively) while entering port and remains in effect while the vessel is moored within in the San Francisco Bay and Delta ports. When activated, this security zone will encompass a portion of the waterway described as a 100-yard radius around a cruise ship or tank ship in the San Francisco Bay and Delta ports. This security zone is automatically deactivated when the cruise ship or tank ship passes a line drawn between San Francisco Main Ship Channel buoys 7 and 8 (LLNR 4190 & 4195, positions 37°46.9′N, 122°35.4′W & 37°46.5′N, 122°35.2′W, respectively) on its departure from port. Vessels and people may be allowed to enter an established security zone on a case-by-case basis with authorization from the Captain of the Port.

Regulatory Evaluation

This rule is not a ''significant regulatory action'' under section 3(f) of Executive Order 12866, Regulatory Planning and Review, and does not require an assessment of potential costs and benefits under section 6(a)(3) of that Order. The Office of Management and Budget has not reviewed it under that Order. It is not ''significant'' under the regulatory policies and procedures of the Department of Transportation (DOT)(44 FR 11040, February 26, 1979).

The size of the zones are the minimum necessary to provide adequate protection for cruise ships and tank ships, their crews, other vessels and crews operating in the vicinity of cruise ships and tank ships, adjoining areas and the public. These zones will encompass a small portion of the waterway for a limited duration. Also, vessels and people may be allowed to enter the zones on a case-by-case basis with authorization from the Captain of the Port. Any hardships experienced by persons or vessels are considered minimal compared to the national interest in protecting cruise ships and tank ships, their crews and the public.

Small Entities

Under the Regulatory Flexibility Act (5 U.S.C. 601–612), we have considered whether this rule would have a significant economic impact on a substantial number of small entities. The term ''small entities'' comprises small businesses, not-for-profit organizations that are independently owned and operated and are not dominant in their fields, and governmental jurisdictions with populations of less than 50,000.

The Coast Guard certifies under 5 U.S.C. 605(b) that this rule will not have a significant economic impact on a substantial number of small entities. The security zones will not have a significant economic impact on a substantial number of small entities for several reasons: Small vessel traffic can pass safely around the area and vessels engaged in recreational activities, sightseeing and commercial fishing have ample space outside of the security zones to engage in these activities. When a cruise ship or tank ship is at anchor, vessel traffic will have ample room to maneuver around the security zones. Small entities and the maritime public will be advised of these security zones via public notice to mariners.

Assistance for Small Entities

Under section 213(a) of the Small Business Regulatory Enforcement Fairness Act of 1996 (Public Law 104–121), we offer to assist small entities in understanding the rule so that they could better evaluate its effects on them and participate in the rulemaking process. If the rule will affect your small business, organization, or government jurisdiction and you have questions concerning its provisions or options for compliance, please contact the person listed under **FOR FURTHER INFORMATION CONTACT** for assistance in understanding this rule.

Small businesses may send comments on the actions of Federal employees who enforce, or otherwise determine compliance with, Federal regulations to the Small Business and Agriculture Regulatory Enforcement Ombudsman and the Regional Small Business Regulatory Fairness Boards. The Ombudsman evaluates these actions annually and rates each agency's responsiveness to small business. If you wish to comment on actions by employees of the Coast Guard, call 1–888–REG–FAIR (1–888–734–3247).

Collection of Information

This rule calls for no new collection of information under the Paperwork Reduction Act of 1995 (44 U.S.C. 3501–3520).

Federalism

A rule has implications for federalism under Executive Order 13132, Federalism, if it has a substantial direct effect on State or local governments and would either preempt State law or impose a substantial direct cost of compliance on them. We have analyzed this rule under that Order and have determined that it does not have implications for federalism.

Unfunded Mandates Reform Act

The Unfunded Mandates Reform Act of 1995 (2 U.S.C. 1531–1538) requires Federal agencies to assess the effects of their discretionary regulatory actions. In particular, the Act addresses actions that may result in the expenditure by a State, local, or tribal government, in the aggregate, or by the private sector of $100,000,000 or more in any one year. Though this rule will not result in such an expenditure, we do discuss the effects of this rule elsewhere in this preamble.

Taking of Private Property

This rule will not effect a taking of private property or otherwise have taking implications under Executive Order 12630, Governmental Actions and Interference with Constitutionally Protected Property Rights.

Civil Justice Reform

This rule meets applicable standards in sections 3(a) and 3(b)(2) of Executive Order 12988, Civil Justice Reform, to minimize litigation, eliminate ambiguity, and reduce burden.

Protection of Children

We have analyzed this rule under Executive Order 13045, Protection of Children from Environmental Health Risks and Safety Risks. This rule is not an economically significant rule and does not create an environmental risk to health or risk to safety that may disproportionately affect children.

Indian Tribal Governments

This rule does not have tribal implications under Executive Order 13175, Consultation and Coordination with Indian Tribal Governments, because it does not have a substantial direct effect on one or more Indian tribes, on the relationship between the Federal Government and Indian tribes, or on the distribution of power and responsibilities between the Federal Government and Indian tribes.

Energy Effects

We have analyzed this rule under Executive Order 13211, Actions Concerning Regulations That Significantly Affect Energy Supply, Distribution, or Use. We have determined that it is not a ''significant energy action'' under that order because it is not a ''significant regulatory action'' under Executive Order 12866 and is not likely to have a significant adverse effect on the supply, distribution, or use of energy. It has not been designated by the Administrator of the Office of Information and Regulatory Affairs as a significant energy action. Therefore, it does not require a Statement of Energy Effects under Executive Order 13211.

Environment

We have considered the environmental impact of this rule and concluded that under figure 2–1, paragraph (34)(g), of Commandant Instruction M16475.lD, this rule is categorically excluded from further environmental documentation. A ''Categorical Exclusion Determination'' is available in the docket for inspection or copying where indicated under **ADDRESSES.**

List of Subjects in 33 CFR Part 165

Harbors, Marine safety, Navigation (water), Reports and record keeping requirements, Security measures, Waterways.

For the reasons discussed in the preamble, the Coast Guard amends 33 CFR part 165 as follows:

PART 165—REGULATED NAVIGATION AREAS AND LIMITED ACCESS AREAS

1. The authority citation for part 165 continues to read as follows:

Authority: 33 U.S.C. 1231; 50 U.S.C. 191, 33 CFR 1.05–1(g), 6.04–1, 6.04–6, 160.5; 49 CFR 1.46.

2. Add a new temporary § 165.T11–098 to read as follows:

§ 165.T11–098 Security Zones; San Francisco Bay and Delta ports.

(a) *Regulated area.* Temporary moving security zones are established as a 100-yard radius around all cruise ships and tank ships while entering or departing the San Francisco Bay and Delta ports. These moving security zones are activated when the cruise ship or tank ship passes a line drawn between San Francisco Main Ship Channel buoys 7 and 8 (LLNR 4190 & 4195, positions 37°46.9′N, 122°35.4′W & 37°46.5′N, 122°35.2′W, respectively) while entering the Port of San Francisco. Temporary fixed security zones are established as a 100 yard radius around all cruise ships and tank ships docked in the San Francisco Bay and Delta ports. This security zone is deactivated when the cruise ship or tank ship passes a line drawn between San Francisco Main Ship Channel buoys 7 and 8 (LLNR 4190 & 4195, positions 37°46.9′N, 122°35.4′W & 37°46.5′N, 122°35.2′W, respectively) on its departure from the Port of San Francisco.

(b) *Regulations.* (1) In accordance with the general regulations in § 165.33 of this part, the following rules apply to security zones established by this section:

(i) No person or vessel may enter or remain in a security zone without the permission of the Captain of the Port;

(ii) Each person and vessel in a security zone shall obey any direction or order of the Captain of the Port;

(iii) The Captain of the Port may take possession and control of any vessel in a security zone;

(iv) The Captain of the Port may remove any person, vessel, article, or thing from a security zone;

(v) No person may board, or take or place any article or thing on board, any vessel in a security zone without the permission of the Captain of the Port; and

(vi) No person may take or place any article or thing upon any waterfront facility in a security zone without the permission of the Captain of the Port.

(2) The Captain of the Port will notify the public via published notice to mariners.

(3) Nothing in this section shall be construed as relieving the owner or person in charge of any vessel from complying with the rules of the road and safe navigation practice.

(4) The regulations of this section will be enforced by the Captain of the Port San Francisco Bay, or his authorized representative.

(c) *Dates.* This section becomes effective at 11:59 p.m. PST on December 21, 2001, and will terminate at 11:59 p.m. PDT on June 21, 2002.

Dated: December 21, 2001.

P. V. Neffenger,

Commander, U.S. Coast Guard, Alternate Captain of the Port, San Francisco Bay, California.

[FR Doc. 02–4085 Filed 2–19–02; 8:45 am]

BILLING CODE 4910–15–U

ENVIRONMENTAL PROTECTION AGENCY

40 CFR Part 300

[FRL–7147–2]

National Oil and Hazardous Substances Pollution Contingency Plan; National Priorities List

AGENCY: Environmental Protection Agency.

ACTION: Direct final notice of partial deletion of the California Gulch Superfund Site from the National Priorities List.

SUMMARY: The Environmental Protection Agency (EPA) Region 8 is publishing a direct final notice of partial deletion of the subunits A and B, residential waste rock piles, and the parks and playgrounds within Operable Unit 9 (OU 9) of the California Gulch Superfund Site (Site), Lake County, Colorado from the National Priorities List (NPL).

The NPL, promulgated pursuant to section 105 of the Comprehensive Environmental Response, Compensation and Liability Act (CERCLA) of 1980, as amended, is appendix B of 40 CFR part 300, which is the National Oil and Hazardous Substance Pollution Contingency Plan (NCP). This direct final partial deletion is being published by EPA with the concurrence of the State of Colorado, through the Colorado Department of Public Health and Environment, because EPA has determined that all appropriate response actions under CERCLA have been completed, and therefore further remedial action pursuant to CERCLA is not appropriate.

OU 9 includes the Residential Populated Areas. EPA issued a Record of Decision (ROD) for OU 9 on September 2, of 1999. The Remedial Investigation has shown that the taking of remedial measures is not appropriate for subunits A and B of the Residential Populated Areas. Proposal to partially delete subunits A and B of the Residential Populated Areas was made by the State of Colorado, through the Colorado Department of Public Health and Environment, on November 3, 2000.

The Removal Action for the residential waste rock piles within OU 9 was completed on December 22, 1999 and the Removal Action Completion Report was submitted to EPA in July 2001. The Remedial Action for the parks and playgrounds within OU9 was completed on September 27, 2000.

The Site has been divided into 12 Operable Units (OUs). This direct final partial deletion pertains only to the subunits A and B, residential waste rock piles, and parks and playgrounds within OU 9 of the Site. Response activities will continue at the remaining OUs. Furthermore, this partial deletion does not alter the status of the Site-wide Surface and Ground Water, OU 12, which is not proposed for deletion and remains on the NPL.

DATES: This direct final partial deletion action will be effective April 22, 2002 unless EPA receives adverse comments by March 22, 2002. If adverse comments are received, EPA will publish a timely withdrawal of the direct final partial deletion in the **Federal Register** informing the public that the partial deletion will not take effect.

ADDRESSES: Comments may be mailed to: Rebecca Thomas, Remedial Project Manager, Environmental Protection Agency, Region 8, Mail Code 8EPR–SR, 999 18th Street, Suite 300, Denver, CO 80202, *Thomas.Rebecca@epamail.epa.gov,* (303) 312–6552.

Information Repositories: Comprehensive information about the California Gulch Site is available for viewing and copying at the Site information repositories located at: U.S. EPA Region 8, Superfund Records Center, 999 18th Street, 5th Floor, Denver, CO 80202, (303) 312–6473.

Viewing hours: 8:00 A.M. to 4:30 P.M., Monday through Friday, excluding holidays. and Lake County Pubic Library, 1115 Harrison Avenue, Leadville, CO 80461, (719) 486–0569.

FOR FURTHER INFORMATION CONTACT: Rebecca Thomas, Remedial Project Manager, Environmental Protection Agency, Region 8, Mail Code 8EPR–SR, 999 18th Street, Suite 300, Denver, CO 80202, *Thomas.Rebecca@epamail.epa.gov,* (303) 312–6552.

SUPPLEMENTARY INFORMATION:

Table of Contents

I. Introduction
II. NPL Deletion Criteria
III. Deletion Procedures
IV. Basis for Partial Site Deletion
V. Partial Deletion Action

I. Introduction

EPA Region 8 is publishing this direct final notice of partial deletion of subunits A and B, residential waste rock piles, and the parks and playgrounds within OU 9, California Gulch Superfund Site from the NPL.

The EPA identifies sites that appear to present a significant risk to public health or the environment and maintains the NPL as the list of those sites. As described in the § 300.425(e)(3) of the NCP, sites partially deleted from the NPL remain eligible for remedial actions if conditions at a partially deleted site warrant such action.

Because EPA considers this action to be noncontroversial and routine, EPA is taking it without prior publication of a notice of intent to partially delete. This action will be effective April 22, 2002, unless EPA receives adverse comments by March 22, 2002 on this document. If adverse comments are received within the 30-day public comment period on this document, EPA will publish a timely withdrawal of this direct final partial deletion before the effective date of the partial deletion and the partial deletion will not take effect. EPA will, as appropriate, prepare a response to comments and continue with the deletion process on the basis of the notice of intent to partially delete and the comments already received. There will be no additional opportunity to comment.

Section II of this document explains the criteria for deleting sites from the NPL. Section III discusses procedures that EPA is using for this action. Section IV discusses the subunits A and B, residential waste rock piles, and the parks and playgrounds within OU 9, California Gulch Superfund Site and demonstrates how it meets the deletion criteria. Section V discusses EPA's action to partially delete the Site from the NPL unless adverse comments are received during the public comment period.

II. NPL Deletion Criteria

Section 300.425(e) of the NCP provides that releases may be partially deleted from the NPL where no further response is appropriate. In making a determination to partially delete a Site from the NPL, EPA shall consider, in consultation with the State, whether any of the following criteria have been met:

i. Responsible parties or other persons have implemented all appropriate response actions required;

ii. All appropriate Fund-financed (Hazardous Substance Superfund Response Trust Fund) response under CERCLA has been implemented, and no further response action by responsible parties is appropriate; or

iii. The remedial investigation has shown that the release poses no significant threat to public health or the environment and, therefore, the taking of remedial measures is not appropriate.

Even if a site is partially deleted from the NPL, where hazardous substances, pollutants, or contaminants remain at the partially deleted site above levels that allow for unlimited use and unrestricted exposure, CERCLA section

121(c), 42 U.S.C. 9621(c) requires that a subsequent review of the site be conducted at least every five years after the initiation of the remedial action at the partially deleted site to ensure that the action remains protective of public health and the environment. If new information becomes available which indicates a need for further action, EPA may initiate remedial actions. Whenever there is a significant release from a site partially deleted from the NPL, the partially deleted site may be restored to the NPL without application of the hazard ranking system.

III. Deletion Procedures

The following procedures apply to the partial deletion of the Site:

(1) The EPA consulted with the State of Colorado on the partial deletion of the Site from the NPL prior to developing this direct final notice of partial deletion.

(2) The State of Colorado concurred with partial deletion of the Site from the NPL.

(3) Concurrently with the publication of this direct final notice of partial deletion, a notice of the availability of the parallel notice of intent to partially delete was published today in the ''Proposed Rules'' section of the **Federal Register** and is being published in a major local newspaper of general circulation at or near the Site and is being distributed to appropriate federal, state, and local government officials and other interested parties; the newspaper notice announces the 30-day public comment period concerning the notice of intent to partially delete the Site from the NPL.

(4) The EPA placed copies of documents supporting the partial deletion in the Site information repositories identified above.

(5) If adverse comments are received within the 30-day public comment period on this document, EPA will publish a timely notice of withdrawal of this direct final notice of partial deletion before its effective date and will prepare a response to comments and continue with the deletion process on the basis of the notice of intent to partially delete and the comments already received.

Partial deletion of a site from the NPL does not itself create, alter, or revoke any individual's rights or obligations. Partial deletion of a site from the NPL does not in any way alter EPA's right to take enforcement actions, as appropriate. The NPL is designed primarily for informational purposes and to assist EPA management. Section 300.425(e)(3) of the NCP states that the partial deletion of a site from the NPL does not preclude eligibility for future response actions, should future conditions warrant such actions.

While EPA does not believe that any future response action within the subunits A and B, residential waste rock piles, and the parks and playgrounds within Operable Unit 9 will be needed, if future conditions warrant such action, the deleted areas will remain eligible for future response actions. Furthermore, this partial deletion does not alter the status of the Site-wide Surface and Ground Water, Operable Unit 12, of the California Gulch Superfund Site, which is not proposed for deletion and remains on the NPL.

IV. Basis for Partial Site Deletion

The following provides EPA's rationale for deleting the subunits A and B, residential waste rock piles, and parks and playgrounds within OU 9 of the California Gulch Site from the NPL:

Site Location

The California Gulch Superfund Site is located in Lake County, Colorado approximately 100 miles southwest of Denver. The Site is in a highly mineralized area of the Colorado Rocky Mountains covering 16½ square miles of a watershed that drains along California Gulch to the Arkansas River. The Site includes the City of Leadville, various parts of the Leadville Historic Mining District, and Stringtown. A section of the Arkansas River from the confluence of California Gulch to the confluence of Lake Fork Creek is also included.

Subunits A and B are located within the outlaying areas of Leadville zoned for residential use. The residential waste rock piles are located on the eastern side Leadville. The majority of the parks and playgrounds are located within Leadville. A map and site coordinates of the general location of subunits A and B and the residential waste rock piles are included in the docket at the information repositories listed above. The docket also includes a map of the parks and playgrounds.

Site History

The California Gulch Superfund Site was listed on the National Priorities List on September 8, 1983, 48 FR 40658 (1983). Mining, mineral processing, and smelting activities have occurred at the Site for more than 130 years. Mining in the District began in 1860, when placer gold was discovered in California Gulch. As the placer deposits were exhausted, underground workings became the principal method for removing gold, silver, lead, and zinc ore. As these mines were developed, waste rock was excavated along with the ore and placed near the mine entrances. Ore was crushed and separated into metallic concentrates at mills, with mill tailing generally slurried into tailing impoundments. The Site was placed on the NPL because of concerns about the impact of mine drainage on surface waters in California Gulch and the impact of heavy metals loading in the Arkansas River.

In order to expedite the clean up of the Site, EPA agreed, pursuant to the 1994 Consent Decree, to divide the Site into twelve Operable Units (OUs). With the exception of OU 12, the operable units pertain to distinct geographical areas corresponding to areas of responsibility for the identified responsible parties and/or to distinct sources of contamination. EPA has taken responsibility for operable units where either no responsible party could be identified, the United States was a responsible party, or cash-out settlements had been reached with the responsible parties.

Under the 1994 Consent Decree, OUs 2 through 11 were designated to deal with areas where the appropriate responsible party or the United States would conduct source remediation. OU 12, which covers the entire Site, was designated to address site-wide surface and groundwater. OU 12 will be addressed after completion of source remediation in OUs 2 through 11. The Consent Decree recognized that additional source remediation or other appropriate response actions related to surface or ground water could occur as part of OU 12 anywhere within the 16.5 square mile of the Site. As determined by the Remedial Investigation, taking of remedial measures is not appropriate for subunits A and B. Therefore, surface and groundwater within subunits A and B require no consideration for OU 12.

EPA is partially deleting the subunits A and B, residential waste rock piles, and parks and playgrounds within OU 9 because all appropriate CERCLA response actions have been completed in these areas as described in Section IV. Response actions are not complete at most of the other OUs at the Site. Those OUs will remain on the NPL are not the subject of this partial deletion. The OUs are as follows:

OU 1 Yak Tunnel/Water Treatment Plant
OU 2 Malta Gulch Tailing Impoundments and Lower Malta Gulch Fluvial Tailing
OU 3 D&RG Slag Piles and Railroad Yard/Easement
OU 4 Upper California Gulch
OU 5 Asarco Smelter Sites/Slag/Mill Site

OU 6 Starr Ditch/Stray Horse Gulch/Lower Evans Gulch/Penrose Mine Waste Pile
OU 7 Apache Tailing Impoundments
OU 8 Lower California Gulch
OU 9 Residential Populated Areas
OU 10 Oregon Gulch
OU 11 Arkansas River Valley Floodplain
OU 12 Site-wide Surface and Ground Water

Operable Unit 9 of the California Gulch Site contains the Residential Populated Areas. The area encompasses the City of Leadville, Stringtown, and outlying areas zoned for residential use. Pursuant to the 1994 Consent Decree, Asarco Incorporated is responsible for conducting all appropriate response actions at OU 9.

Cultural Resources

Leadville has been classified as a National Historic Landmark. The State Historic Preservation Officer (SHPO) and the Advisory Council on Historic Preservation (ACHP) are contacted prior to remedial activities within OU 9. Procedures outlined in the EPA/SHPO/ACHP Programmatic Agreement will be followed to safeguard cultural resources. As a part of the Lake County Community Health Program, structures built before 1950 will be assessed by SHPO. SHPO will then determine the property's contributions to the historic district prior to action. Cultural Resource Mitigation activities were performed for the Non-Time Critical Removal Action in accordance with the Final Mitigation Plan for Selected Mine Waste piles, Operable Unit 9, California Gulch Superfund Site, Lake County, Colorado (September 4, 1997).

Remedial Investigation and Feasibility Study (RI/FS)

A site-wide Phase I Remedial Investigation (Phase I RI), which primarily addressed surface and groundwater contamination, was issued in January 1987. As a result of the Phase I RI, EPA developed the first operable unit at the Site, the Yak Tunnel. This first operable unit was designed to address the largest single source of metallic loading.

The Phase I RI was followed by a number of additional site-wide studies, including the Tailing Disposal Area Remedial Investigation Report, Baseline Human Health Risk Assessment Part A, Part B, and Part C, Ecological Risk Assessment for Terrestrial Ecosystems, Baseline Aquatic Ecological Risk Assessment, Groundwater RI, Surface Water RI, Waste Rock RI, and Site-wide Screening Feasibility Study (FS). OU 9 specific studies were also conducted, including the Soil-Lead in Residential Populated Areas RI, Parks and Playgrounds Engineering Evaluation and Cost Analysis (EE/CA), Mine Waste Engineering Evaluation and Cost Analysis EE/CA, and the Final Residential Soil FS.

Studies have determined lead to be the primary contaminant of concern in OU 9. The Remedial Investigation, completed in May of 1994, identified soils as the primary exposure pathway to the residential population at the site. The Final Residential Soil Feasability Study, completed in November of 1998, evaluated the residential soils of properties, yards and open space areas where lead levels exceeded the trigger level of 3,500 ppm and presented seven remedial alternatives.

Response Actions

OU 9 Response Actions for Subunits A and B

Subunits A and B are located within the outlying areas zoned for residential use within OU 9. The Remedial Investigation and Terrestrial Risk Assessment have shown that taking of remedial measures is not appropriate for subunits A and B. Proposal to partially delete subunits A and B of the Residential Populated Areas was made by the State of Colorado through the Colorado Department of Public Health and Environment on November 3, 2000.

OU9 Response Actions for Residential Waste Rock Piles

A Mine Waste Engineering Evaluation and Cost Analysis was prepared in December 1995 to identify Removal Action alternatives for the mine waste piles within OU 9. Removal (Response) Actions for the mine waste piles were described in the Non-Time Critical Removal Action Memorandum signed August 15, 1996. Activities included removal of 14 residential waste rock piles with lead concentrations greater than 3,500 ppm. Pursuant to the Action Memorandum, Asarco conducted the removal action in 1997 and 1999. Residential waste rock piles with lead concentrations greater than 3,500 ppm lead were removed and placed at end use locations. Residential waste rock piles which fell below action trigger levels were left in place.

The four piles with the highest lead concentrations were removed in 1997 and the remaining ten piles were removed in 1999. During the 1997 removal action, four piles (Hibschle #14 and #15, Wolcott #19, Hope/Last Chip #109) were removed and placed within Operable Unit 6 (OU 6). Approximately 42,400 cubic yards of waste material were placed within the Hams Tailings Pile (OU 6), then compacted and capped with 30 inches of clean borrow soil.

During the 1999 removal action, the ten waste piles removed included:

#16 Coronado
#17 Coronado/Northern
#22 Gray Eagle/Bison
#24 Kent
#26 Pocahontas
#28 Starr
#108 Turbot
#110 Luzerne
#111 Ypsilanti
#140 Ypsilanti/Ypsilanti B

In addition, eight suspected mine shafts were identified for closure during construction. The method of closure selected for the shafts was a monolithic concrete plug. Confirmation sampling showed that removal had successfully lowered levels to below site clean up levels of 3,500 ppm lead. Thus, no long term monitoring is required. This removal action is consistent with the performance of the final remedial action for OU 9 and is considered as the final remedy for waste mine piles within OU 9.

OU 9 Response Actions for Parks and Playgrounds

A Parks and Playgrounds Engineering Evaluation and Cost Analysis (EE/CA) was prepared in November of 1994. Based on the finding that soils at all parks and playgrounds were below the trigger level of 3,500 ppm lead, EPA approved no further action for the areas addressed by the work plan.

Subsequent to the Parks and Playgrounds EE/CA, one additional playground area was identified in Leadville. A Soil Remediation Site Plan was developed under the direction of the Kids First Program, pursuant to the Record of Decision for Residential Soils. Testing revealed that soils exceeded the trigger level of 3,500 ppm lead, and remedial actions involved the removal of 231 cubic yards of soil. Existing playground equipment was also removed. The excavated area was then filled with top soil and revegetated. Soil confirmation samples indicated that the soil lead concentrations were below the established action levels of 3,500 ppm lead.

Five Year Review

Based on the successful completion of the Removal Action and the Remedial Action, there are no further response actions planned or scheduled for subunits A and B, residential waste rock piles, and the park and playgrounds within OU 9.

Because this decision results in hazardous substances remaining on site,

above health-based levels, five-year reviews of the previous response actions will be required pursuant to the NCP. These reviews will be conducted in conjunction with site-wide five-year reviews. The Second Five Year Review Report for California Gulch, signed in September of 2001, concluded that the remedy for OU 9 currently protects human health and the environment. The next five-year review at the California Gulch Site is scheduled for completion in September of 2006.

Community Involvement

The Draft Mine waste Engineering Evaluation and Cost Analysis (EE/CA) was issued for public comment. A public meeting was held on December 19, 1995 to discuss the Removal Action for the mine waste piles located within OU 9. The EPA notified the citizens of Leadville by the release of and acceptance of public comment concerning the Mine Waste EE/CA for OU 9.

In November of 1998, EPA issued a Proposed Plan describing the Agency's preferred alternative to address risks to residents from lead in soils and other sources within OU 9. A public meeting to discuss the Proposed Plan was held in Leadville on November 19, 1998. Public comment on the Proposed Plan was accepted from November 12, 1998 through December 14, 1998. EPA then issued a Record of Decision for OU 9 presenting the selected remedy for the Residential Populated Areas of OU 9, California Gulch Superfund Site.

The State of Colorado, through the Colorado Department of Health and Environment, submitted a proposal for the deletion of subunits A and B within OU 9 on November 3, 2000. The petition of partial deletion requested EPA proceed with preparation of the Notice of Intent for Partial Deletion (NOIPD).

Public Participation activities have been satisfied as required in CERCLA section 113(k), 42 U.S.C. 9613(k), and section117, 42 U.S.C. 9617. Documents in the deletion docket which EPA relied on for recommendation of the partial deletion from the NPL are available to the public in the information repositories.

V. Partial Deletion Action

The EPA, with concurrence of the State of Colorado, has determined that all appropriate responses under CERCLA have been completed, and that no further response actions, under CERCLA, other than five-year reviews, are necessary. Therefore, EPA is deleting subunits A and B, residential waste rock piles, and the parks and playgrounds within OU 9, California Gulch Superfund Site from the NPL.

Because EPA considers this action to be noncontroversial and routine, EPA is taking it without prior publication. This action will be effective April 22, 2002 unless EPA receives adverse comments by March 22, 2002. If adverse comments are received within the 30-day public comment period, EPA will publish a timely withdrawal of this direct final notice of partial deletion before the effective date of the deletion and it will not take effect and, EPA will prepare a response to comments and continue with the deletion process on the basis of the notice of intent to partially delete and the comments already received. There will be no additional opportunity to comment.

List of Subjects in 40 CFR Part 300

Environmental protection, Air pollution control, Chemicals, Hazardous waste, Hazardous substances, Intergovernmental relations, Penalties, Reporting and recordkeeping requirements, Superfund, Water pollution control, Water supply.

Dated: January 30, 2002.

Jack W. McGraw,

Acting Regional Administrator, Region 8.

For the reasons set out in this document, 40 CFR part 300 is amended as follows:

PART 300—[AMENDED]

1. The authority citation for part 300 continues to read as follows:

Authority: 33 U.S.C. 1321(c)(2); 42 U.S.C. 9601–9657; E.O. 12777, 56 FR 54757, 3 CFR, 1991 Comp., p. 351; E.O. 12580, 52 FR 2923, 3 CFR, 1987 Comp., p. 193.

Appendix B—[Amended]

2. Table 1 of appendix B to part 300 is amended by revising the entry under Colorado for ''California Gulch'' to read as follows:

TABLE 1.—GENERAL SUPERFUND SECTION

State	Site name	City/county	Notes [1]
* * * * * * *			
CO	California Gulch	Leadville	P
* * * * * * *			

[1] * * *
P=Sites with partial deletion(s).

* * * * *

[FR Doc. 02–3919 Filed 2–19–02; 8:45 am]

BILLING CODE 6560–50–P

NATIONAL AERONAUTICS AND SPACE ADMINISTRATION

48 CFR Parts 1816 and 1852

RIN 2700–AC33

Major Breach of Safety or Security

AGENCY: National Aeronautics and Space Administration (NASA).

ACTION: Final rule.

SUMMARY: This final rule amends the NASA FAR Supplement (NFS) by revising the Major Breach of Safety or Security clause to more clearly state that a major breach of security is an act or omission by the contractor that results in various outcomes (compromise of classified information; illegal technology transfer, etc.); to clarify that two of the outcomes are equipment or property damage from vandalism greater than $250,000, or theft greater than $250,000; and to correctly identify the Occupational Safety and Health Administration (OSHA). In addition, the guidance for award fee evaluation factors is revised to be consistent with the Major Breach of Safety or Security clause.

EFFECTIVE DATE: February 20, 2002.

FOR FURTHER INFORMATION CONTACT: Jeff Cullen, NASA Headquarters Office of Procurement, Contract Management Division (Code HK), Washington, DC 20546; 202–358–1784; e-mail: *jcullen@hq.nasa.gov.*

SUPPLEMENTARY INFORMATION:

A. Background

This final rule revises 1852.223–75, Major Breach of Safety or Security. The current major breach of security description contained in paragraph (b) of the clause includes outcomes that

may result in a major breach of security. However, the description does not clearly state that to be a major breach of security, the outcomes must result from an act or omission by the contractor. Revising the clause to clearly state that a major breach of security is an act or omission by the contractor that results in the various outcomes (compromise of classified information, illegal technology transfer, etc.) would make the major breach of security paragraph consistent with paragraph (a) (major breach of safety) of the clause.

Additionally, the clause states that a major breach of security may arise from damage or loss greater than $250,000 to the Government, but it is not clear if this outcome is a standalone provision or if it applies to other outcomes in the clause (e.g., does a major breach occur if illegal technology transfer or theft occurs, and the result is damage or loss greater than $250,000 to the Government). This revision will remove the reference to damage or loss greater than $250,000 to the Government, but also clarify that two of the outcomes are equipment or property damage from vandalism greater than $250,000, or theft greater than $250,000.

Also, the definition of major breach of safety or security in 1816.405–274, Award Fee Evaluation Factors, will be revised to make it consistent with the revised 1852.223–75, Major Breach of Safety or Security definition.

Lastly, OSHA is corrected to read as the Occupational Safety and Health Administration in 1852.223–75, Major Breach of Safety or Security clause and in 1816.405–274, Award Fee Evaluation Factors.

B. Regulatory Flexibility Act

This final rule does not constitute a significant revision within the meaning of FAR 1.501 and Public Law 98–577, and publication for public comment is not required. However, NASA will consider comments from small entities concerning the affected NFS Parts 1816 and 1852 in accordance with 5 U.S.C. 610.

C. Paperwork Reduction Act

The Paperwork Reduction Act does not apply because the changes to the NFS do not impose recordkeeping or information collection requirements, or collections of information from offerors, contractors, or members of the public which require the approval of the Office of Management and Budget under 44 U.S.C. 3501, *et seq.*

List of Subjects in 48 CFR Parts 1816 and 1852

Government procurement.

Tom Luedtke,

Assistant Administrator for Procurement.

Accordingly, 48 CFR parts 1816 and 1852 are amended as follows:

1. The authority citation for 48 CFR parts 1816 and 1852 continues to read as follows:

Authority: 42 U.S.C. 2473 (c)(1).

PART 1816—TYPES OF CONTRACTS

2. In section 1816.405–274, revise paragraphs (c)(2) and (c)(3) to read as follows:

1816.405–274 Award fee evaluation factors.

* * * * *

(c) * * *

(2) A major breach of safety must be related directly to the work on the contract. A major breach of safety is an act or omission of the Contractor that consists of an accident, incident, or exposure resulting in a fatality or mission failure; or in damage to equipment or property equal to or greater than $1 million; or in any ''willful'' or ''repeat'' violation cited by the Occupational Safety and Health Administration (OSHA) or by a state agency operating under an OSHA approved plan.

(3) A major breach of security may occur on or off Government installations, but must be directly related to the work on the contract. A major breach of security is an act or omission by the contractor that results in compromise of classified information, illegal technology transfer, workplace violence resulting in criminal conviction, sabotage, compromise or denial of information technology services, equipment or property damage from vandalism greater than $250,000, or theft greater than $250,000.

* * * * *

PART 1852—SOLICITATION PROVISIONS AND CONTRACT CLAUSES

3. Section 1852.223–75 is amended by revising the clause date; deleting ''Occupational Health and Safety Administration'' and adding ''Occupational Safety and Health Administration'' in its place in the last sentence of paragraph (a); and revising paragraph (b) to read as follows:

1852.223–75 Major Breach of Safety or Security.

* * * * *

Major Breach of Safety or Security (February 2002)

* * * * *

(b) Security is the condition of safeguarding against espionage, sabotage, crime (including computer crime), or attack. A major breach of security may constitute a breach of contract that entitles the Government to exercise any of its rights and remedies applicable to material parts of this contract, including termination for default. A major breach of security may occur on or off Government installations, but must be related directly to the work on the contract. A major breach of security is an act or omission by the Contractor that results in compromise of classified information, illegal technology transfer, workplace violence resulting in criminal conviction, sabotage, compromise or denial of information technology services, equipment or property damage from vandalism greater than $250,000, or theft greater than $250,000.

* * * * *

[FR Doc. 02–4077 Filed 2–19–02; 8:45 am]

BILLING CODE 7510–01–P

NATIONAL AERONAUTICS AND SPACE ADMINISTRATION

48 CFR Part 1832

RIN 2700–AC33

Limitation on Incremental Funding and Deobligations

AGENCY: National Aeronautics and Space Administration.

ACTION: Final rule.

SUMMARY: This final rule amends the NASA FAR Supplement (NFS) to revise the criteria for incrementally funding contracts and establish dollar thresholds for incremental funding and deobligations under contracts. These changes will further limit the number of contracts eligible to be incrementally funded and the number of incremental funding and deobligation modifications.

EFFECTIVE DATE: February 20, 2002.

FOR FURTHER INFORMATION CONTACT: Ron Lentz, NASA Headquarters (Code HK), Washington, DC, (202) 358–0416, e-mail: *rlentz@hq.nasa.gov.*

SUPPLEMENTARY INFORMATION:

A. Background

Currently, NFS 1832.702–70 limits the incremental funding of cost-reimbursement and fixed-price contracts. In spite of these restrictions, numerous incremental funding modifications are being issued against

each of the above contracts. The high number of modifications creates a workload burden for budget and procurement personnel in the Agency. This final rule further restricts the number of cost-reimbursement contracts that can be incrementally funded by revising the criteria that a contract must meet in order for it to be incrementally funded. A threshold of $500,000 or more is specified for R&D contracts under which no supplies are deliverable and a minimum contract period of performance of at least one year is specified. Furthermore, initial contract funding must be $100,000 or more. It also establishes a minimum dollar threshold of $25,000 that certain incremental funding and deobligation modifications must meet.

B. Regulatory Flexibility Act

NASA certifies that this final rule will not have a significant economic impact on a substantial number of small entities within the meaning of the Regulatory Flexibility Act, 5 U.S.C. 601 *et seq.* because the changes primarily affect internal procedures which will merely result in fewer, but larger dollar value, funding actions on contracts.

C. Paperwork Reduction Act

The Paperwork Reduction Act does not apply because this final rule does not impose any new record keeping or information collection requirements, or collection of information from offerors, contractors, or members of the public that require the approval of the Office of Management and Budget under 44 U.S.C. 3501, *et seq.*

List of Subjects in 48 CFR Part 1832

Government procurement.

Tom Luedtke,

Assistant Administrator for Procurement.

Accordingly, 48 CFR part 1832 is amended as follows:

1. The authority citation for 48 CFR Part 1832 continues to read as follows:

Authority: 42 U.S.C. 2473(c)(1).

PART 1832—CONTRACT FINANCING

2. Revise section 1832.702–70 to read as follows:

1832.702–70 NASA policy.

(a) Cost-reimbursement contracts may be incrementally funded only if all the following conditions are met:

(1) The total value of the contract (including options as defined in FAR Subpart 17.2) is—

(i) $500,000 or more for R&D contracts under which no supplies are deliverable; or

(ii) $1,000,000 or more for all other contracts.

(2) The period of performance exceeds one year.

(3) The funds are not available to fund the total contract value fully at award.

(4) Initial funding of the contract is $100,000 or more.

(b) Fixed-price contracts, other than those for research and development, shall not be incrementally funded.

(c)(1) Fixed-price contracts for research and development may be incrementally funded if the conditions of 1832.702–70(a)(1) through (4) are met and the initial funding of the contract is at least 50 percent of the total fixed price.

(2) Incrementally funded fixed-price contracts shall be fully funded as soon as adequate funding becomes available.

(d) Except for a modification issued to fully fund a contract, incremental funding modifications shall not be issued for amounts totaling less than $25,000.

(e) Except for a modification issued to close out a contract, modifications deobligating funds shall not be issued for amounts totaling less than $25,000.

(f) The procurement officer, with the concurrence of the installation Comptroller, may waive any of the conditions set forth in paragraphs 1832.702–70(a) through (e). The procurement officer shall maintain a record of all such approvals during the fiscal year.

(g) A class deviation from the conditions set forth in paragraphs 1832.702–70(a) through (e) exists to permit incremental funding of contracts under Phase II of the Small Business Innovation Research (SBIR) and Small Business Technology Transfer (STTR) programs. This deviation exists with the understanding that the contracts will be fully funded when funds become available.

[FR Doc. 02–4076 Filed 2–19–02; 8:45 am]

BILLING CODE 7510–01–P

Rules and Regulations

Federal Register
Vol. 67, No. 34
Wednesday, February 20, 2002

This section of the FEDERAL REGISTER contains regulatory documents having general applicability and legal effect, most of which are keyed to and codified in the Code of Federal Regulations, which is published under 50 titles pursuant to 44 U.S.C. 1510.

The Code of Federal Regulations is sold by the Superintendent of Documents. Prices of new books are listed in the first FEDERAL REGISTER issue of each week.

DEPARTMENT OF AGRICULTURE

Animal and Plant Health Inspection Service

9 CFR Parts 50 and 77

[Docket No. 00–106–1]

RIN 0579–AB29

Animals Destroyed Because of Tuberculosis; Payment of Indemnity

AGENCY: Animal and Plant Health Inspection Service, USDA.

ACTION: Interim rule and request for comments.

SUMMARY: We are amending the regulations regarding the payment of indemnity for animals destroyed because of bovine tuberculosis to provide that the Animal and Plant Health Inspection Service will pay owners of the animals an indemnity equal to the difference between the net salvage received and the appraised value of the animals destroyed, up to $3,000 per animal. This action is necessary to further tuberculosis eradication efforts and to protect livestock not infected with bovine tuberculosis from the disease.

DATES: This interim rule was effective February 14, 2002. We will consider all comments we receive that are postmarked, delivered, or e-mailed by April 22, 2002.

ADDRESSES: You may submit comments by postal mail/commercial delivery or by e-mail. If you use postal mail/commercial delivery, please send four copies of your comment (an original and three copies) to: Docket No. 00–106–1, Regulatory Analysis and Development, PPD, APHIS, Station 3C71, 4700 River Road Unit 118, Riverdale, MD 20737–1238. Please state that your comment refers to Docket No. 00–106–1. If you use e-mail, address your comment to regulations@aphis.usda.gov. Your comment must be contained in the body of your message; do not send attached files. Please include your name and address in your message and ''Docket No. 00–106–1'' on the subject line.

You may read any comments that we receive on this docket in our reading room. The reading room is located in room 1141 of the USDA South Building, 14th Street and Independence Avenue SW., Washington, DC. Normal reading room hours are 8 a.m. to 4:30 p.m., Monday through Friday, except holidays. To be sure someone is there to help you, please call (202) 690–2817 before coming.

APHIS documents published in the **Federal Register**, and related information, including the names of organizations and individuals who have commented on APHIS dockets, are available on the Internet at http://www.aphis.usda.gov/ppd/rad/webrepor.html.

FOR FURTHER INFORMATION CONTACT: Dr. Joseph Van Tiem, Senior Staff Veterinarian, National Animal Health Programs, VS, APHIS, 4700 River Road Unit 43, Riverdale, MD 20737–1231; (301) 734–7716.

SUPPLEMENTARY INFORMATION:

Background

Bovine tuberculosis (tuberculosis) is a contagious, infectious, and communicable disease caused by *Mycobacterium bovis.* It affects cattle, bison, deer, elk, goats, and other warm-blooded species, including humans. Tuberculosis in infected animals and humans manifests itself in lesions of the lung, bone, and other body parts, causes weight loss and general debilitation, and can be fatal. At the beginning of the past century, tuberculosis caused more losses of livestock than all other livestock diseases combined. This prompted the establishment of the National Cooperative State/Federal Bovine Tuberculosis Eradication Program for bovine tuberculosis in livestock. Through this program, the Animal and Plant Health Inspection Service (APHIS) works cooperatively with the national livestock industry and State animal health agencies to eradicate tuberculosis from domestic livestock in the United States and prevent its recurrence.

Federal regulations implementing this program are contained in 9 CFR part 77, ''Tuberculosis,'' and in the ''Uniform Methods and Rules—Bovine Tuberculosis Eradication'' (UMR), January 22, 1999, edition, which is incorporated by reference into the regulations in part 77. Additionally, the regulations in 9 CFR part 50 (referred to below as the regulations) provide for the payment of indemnity to owners of certain animals destroyed because of tuberculosis, in order to encourage destruction of animals that are infected with, or at risk of being infected with, the disease.

Use of the Terms ''Affected'' and ''Infected''

Prior to the effective date of this interim rule, when our intent in part 50 was to refer to individual animals infected with tuberculosis, we referred to the animals as being ''affected'' with the disease. However, such usage is inconsistent with the tuberculosis regulations in part 77, which refer to infected animals as ''infected.'' Additionally, it is inconsistent with our general policy of using the term ''affected'' to mean animals that are either infected with or exposed to a disease. Therefore, in this interim rule, wherever our intent is to refer in part 50 only to animals infected with tuberculosis, we are replacing the term ''affected with'' with ''infected with.''

Making such a change, however, creates the situation of our using two different terms in this explanatory **SUPPLEMENTARY INFORMATION** to mean the same thing—i.e., referring to individual animals affected with tuberculosis when describing the content of the regulations prior to this interim rule and referring to individual animals infected with tuberculosis when describing the content of this interim rule. To make clear that both terms refer to the same category of animals, when we refer in this Supplementary Information to the description used prior to this interim rule of individual animals ''affected'' with tuberculosis, we follow that reference with the term ''infected'' in parentheses.

Throughout part 50, there are also references to herds that contain infected animals. In some cases in the regulations, these herds are referred to as being ''infected'' with tuberculosis; in other cases the herds are referred to as being ''affected'' with the disease. In such cases where reference is made to a herd of animals that includes at least

one infected animal, but in which other animals in the herd are not necessarily known to be infected, it is more accurate to refer to the herd as ''affected,'' to indicate that it contains at least one infected animal and also other animals that have likely been exposed to tuberculosis. Therefore, in this interim rule, when we refer to a herd that contains at least one infected animal, we refer to the herd as being ''affected'' with tuberculosis.

Previous Indemnity Limits

Prior to the effective date of this interim rule, the regulations in § 50.3 set a maximum dollar figure on the amount that could be paid by APHIS for an animal destroyed because of tuberculosis. When these amounts were established, they approximated the fair market value of the animals, minus any salvage value that could be received for the animals. The limits per animal were as follows:

- $750 for cattle, bison, and captive cervids affected (infected) with tuberculosis;
- $450 for cattle, bison, and captive cervids exposed to tuberculosis;
- $450 for cattle, bison, and captive cervids classified as tuberculosis suspect; and
- $200 for swine exposed to tuberculosis.

For the most part, however, these amounts were set in 1980 and, in recent years, even when added to the amount received by an owner for salvage, they often came to less than the appraised value of the animals. In this interim rule, we are updating the amount that can be paid for animals destroyed because of tuberculosis to once again allow for payment for the appraised value of the animals, minus salvage value.

In recent years, the disparity between the amount that APHIS could pay for an animal destroyed because of tuberculosis and its appraised value has made some owners reluctant to immediately remove a suspect animal from a herd so that confirmation could be made at slaughter of its tuberculosis status. This has sometimes hindered timely detection and traceback of tuberculous animals, because if a suspect animal were sent to slaughter immediately, and was confirmed there as being infected with tuberculosis, traceback of other animals in the infected animal's herd could have begun immediately, to determine whether they had come in contact with animals from other herds.

However, in instances where cattle have been classified as suspects for tuberculosis based on an official tuberculosis test, many owners have decided to wait 60 days (the minimum amount of time required between tests of cattle and bison; the minimum interval for captive cervids is 90 days) to have the animal retested, rather than have the animal destroyed as a suspect, in the hope that on the retest the animal would test negative. In cases where suspect animals have turned out to be infected with the disease, this has delayed the start of traceback procedures.

Also, because they have been unable to obtain appraised value for animals destroyed because of tuberculosis, instead of depopulating an entire herd containing animals known to be infected with or exposed to tuberculosis, owners have often chosen to remove only those animals that have tested positive for the disease. While it is possible to eliminate tuberculosis infection from a herd by the ''test and removal'' method, depopulation of the herd is the most effective method of ensuring that the infection is eliminated. As reported in the proceedings of the 1994 U.S. Animal Health Association Meeting, up to 33 percent of herds that were released from quarantine through the test and removal method between 1985 and 1994 were found to be affected with tuberculosis by the fifth annual quarantine release test. (VanTiem J.S. and Essey M.A. (1994).—Status of the State/Federal bovine tuberculosis eradication program. *Proceedings of Annual Meeting of the U.S. Animal Health Association,* 98, 539–555.)

Because depopulation is a significantly more effective method of eradicating tuberculosis than test and removal, APHIS recently amended the tuberculosis regulations in 9 CFR part 77 to encourage depopulation of affected herds in U.S. States or zones where tuberculous animals are detected. Under those regulations, if a tuberculosis-affected herd is detected in a State or zone classified as accredited-free, and the herd is depopulated with no evidence of the spread of the disease, the State or zone may retain its accredited-free status.

To address the discrepancy that has arisen between the indemnity amounts allowed to be paid to owners of animals and the appraised value of the animals, and to accelerate the eradication of tuberculosis from U.S. cattle, bison, and captive cervid herds, as well as from other susceptible livestock, we are amending the regulations in § 50.3 to provide that owners will receive from APHIS an amount equal to the appraised value of livestock destroyed because of tuberculosis, minus the net salvage received for the animals. This formula will apply to cattle, bison, and captive cervids infected with tuberculosis, exposed to tuberculosis, or classified as tuberculosis suspect, as well as to other livestock that are exposed to tuberculosis. (As defined in § 50.1, ''livestock'' includes cattle, bison, captive cervids, swine, dairy goats, and other hoofed animals (such as llamas, alpacas, and antelope) raised or maintained in captivity for the production of meat and other products, for sport, or for exhibition.)

The regulations in part 50 provide for the payment of indemnity for cattle, bison, and captive cervids destroyed because they are either affected (infected) with tuberculosis, exposed to tuberculosis, or determined to be suspect for tuberculosis. Additionally, the regulations prior to the effective date of this interim rule provided that indemnity could be paid for swine considered to be exposed to tuberculosis by association with a cattle, bison, or captive cervid herd depopulated because of the disease.

We do not consider it consistent or effective, however, to provide for payment of indemnity for swine considered exposed to tuberculosis and not to allow for payment for other susceptible livestock exposed to the disease. In § 50.1, the definition of *livestock*, which lists those livestock susceptible to tuberculosis, includes cattle, bison, captive cervids, swine, dairy goats, and other hoofed animals (such as llamas, alpacas, and antelope), raised or maintained in captivity for the production of meat and other products, for sport, or for exhibition. In this interim rule, we are providing for the payment of indemnity for infected, exposed, or suspect cattle, bison, and captive cervids, and for other livestock considered to be exposed to tuberculosis by reason of association with a depopulated affected herd.

Payment for Animals Destroyed

In this interim rule, we are amending § 50.3 to provide that the APHIS Administrator is authorized to agree on the part of the U.S. Department of Agriculture (Department) to pay indemnity to owners of the following categories of animals:

1. Cattle, bison, or captive cervids destroyed because they are classified as infected with or exposed to tuberculosis;

2. Cattle, bison, or captive cervids destroyed because they are classified as suspect for tuberculosis, except that indemnity will be withheld for suspect animals until the tuberculosis status of the suspect animal has been determined

(through retesting of the animals or through examination of the animals at slaughter) and, if the suspect cattle, bison, or captive cervid is found to be infected with tuberculosis, until all cattle, bison, and captive cervids 12 months of age or older in the claimant's herd have been tested for tuberculosis under APHIS or State supervision; and

3. Other livestock destroyed because they are classified as exposed to tuberculosis by reason of association with a herd destroyed because of tuberculosis, if the designated tuberculosis epidemiologist determines their destruction will contribute to the tuberculosis eradication program.

In each case, the amount of joint State-Federal indemnity payment, together with the amount of net salvage the owner receives when the animals are slaughtered, shall not exceed the appraised value of the animals. Additionally, the Department will in no case pay more than $3,000 for an animal that is destroyed.

The Department and the U.S. Office of Management and Budget are planning to set overall criteria that would govern how the costs of program activities, including the payment of indemnity, are shared among the Federal government and cooperators such as State and local governments, industry and producers. This interim rule may be amended after publication of final cost-sharing criteria.

Section 50.9—Appraisal of Animals

Provisions regarding the appraisal of cattle, bison, captive cervids, and swine destroyed because of tuberculosis are set forth in § 50.9. Those provisions require that, except for certain situations, cattle, bison, captive cervids, and swine to be destroyed because of tuberculosis be appraised within 15 days after being classified as affected (infected) with tuberculosis, or otherwise being condemned because of the disease. The phrase ''animals condemned because of the disease'' refers to animals condemned by the Department's Food Safety and Inspection Service with regard to human consumption, due to the presence in the animal of tuberculosis lesions. Such a finding was relevant under the regulations prior to this interim rule because, although a suspect or exposed animal that was condemned at slaughter would not have any salvage value, it would become eligible for the indemnity rate for an affected (infected) animal ($750) rather than the rate for a suspect or exposed animal ($450). However, because this interim rule makes no distinction between infected, exposed, or suspect animals in the amount of indemnity to be paid, there is no need to include a reference to condemned animals.

We are additionally retaining the provisions in § 50.9 that when the animals to be destroyed are appraised, due consideration shall be given to their breeding value as well as to their dairy or meat value, and that animals presented for payment as registered must be accompanied by their registration papers. If the registration papers are temporarily not available, or if the animals are less than 3 years old and unregistered, the appropriate veterinarian in charge may grant a reasonable period of time for presentation of the registration papers.

We are also retaining the provision that APHIS may decline to accept any appraisal that appears to be unreasonable or out of proportion to the value of like animals of like quality.

Prior to the effective date of this interim rule, § 50.9 provided simply that the appraisal shall be done by an independent professional appraiser at the expense of APHIS, except that the veterinarian in charge could waive the requirement for an independent professional appraiser for reasons satisfactory to the veterinarian in charge. This provision was adequate when the amount to be paid for animals destroyed was a relatively low set amount and the appraisal process was conducted simply to ensure that the maximum set amount did not exceed the appraised value of a destroyed animal. However, because indemnity payments will now equal the appraised value of the animals minus net salvage received (up to $3,000 per animal), we consider it appropriate to provide owners of animals with the option of requesting a review by the Administrator of an appraised value that the owner considers inadequate.

Therefore, we are amending § 50.9 to provide that animals for which indemnity is to be paid under the regulations must be appraised at their fair market value by an appraiser selected by APHIS. Should the appraisal made by the appraiser selected by APHIS be deemed inadequate by the owner of the animals, the owner will have 15 days from the receipt of the appraisal to submit to the Administrator a request for a review of the appraisal, along with the reasons why the animals should be appraised at a higher value. The decision by the Administrator regarding the value of the animals is final.

Section 50.1—Definitions

On October 23, 2000, we published a final rule in the **Federal Register** (65 FR 63502–63533, Docket No. 99–038–5) in which we made a number of changes to the tuberculosis regulations in part 77. Among the changes we made were revisions to definitions of terms used in part 77. Several of the terms that we revised in part 77 are also used and defined in part 50. In this interim rule, we are revising those definitions in § 50.1 to be consistent with the changes we made in part 77. We discuss each of these changes below.

Captive cervid. Prior to the effective date of this interim rule, in part 50 of the regulations *captive cervid* was defined in part as all species of deer, elk, moose, and all other members of the family Cervidae raised or maintained in captivity for the production of meat and other agricultural products, for sport, or for exhibition. That wording is consistent with the definition in part 77 as it appeared prior to our October 23, 2000, final rule. However, in that final rule, we amended the definition of *captive cervid* to clarify that the cervids described above will continue to be considered captive cervids during the time they are moved interstate and that a wild cervid that is moved interstate will be considered a captive cervid during the period of time between its capture and its release into the wild. We also provided that a captive cervid that escapes will continue to be considered a captive cervid as long as it bears an official eartag or other identification approved by the Administrator as unique and traceable with which to trace the animal back to its herd of origin. In this interim rule, we are amending the definition of *captive cervid* in part 50 to be consistent with the definition in part 77.

Designated epidemiologist. Prior to the effective date of this interim rule, *designated epidemiologist* was defined in part 50 as an epidemiologist appointed by a cooperating State animal health official and the veterinarian in charge to perform functions specified by the ''Uniform Methods and Rules Bovine Tuberculosis Eradication.'' The individual referred to as ''designated epidemiologist'' in part 50 is the same individual referred to as ''designated tuberculosis epidemiologist'' in part 77. However, the definition of ''designated tuberculosis epidemiologist'' we set forth in part 77 in our October 23, 2000, final rule provides a more specific description of that individual's responsibilities than the definition of ''designated epidemiologist'' in part 50 prior to this interim rule. Therefore, in this interim rule, we are replacing the definition of *designated epidemiologist* in § 50.1 with a definition of *designated tuberculosis epidemiologist* (DTE) to read: ''A State or Federal epidemiologist

designated by the Administrator to make decisions concerning the use and interpretation of diagnostic tests for tuberculosis and the management of tuberculosis affected herds. A DTE has the responsibility to determine the scope of epidemiologic investigations, determine the status of animals and herds, assist in the development of individual herd plans, and coordinate disease surveillance and eradication programs within the geographic area of the DTE's responsibility.''

Herd. Prior to the effective date of this interim rule, *herd* was defined in part 50 as any group of livestock maintained on common ground for any purpose, or two or more groups of livestock under common ownership or supervision, geographically separated but that have an interchange or movement of livestock without regard to health status, as determined by the Administrator. That wording is consistent with the definition in part 77 as it appeared prior to our October 23, 2000, final rule, except that the part 77 definition included a clarifying statement that a group means one or more animals. However, in our October 23, 2000, final rule, we amended the part 77 definition of *herd* to provide that livestock assembled at a feedlot will not be considered a herd. In this interim rule, we are amending the definition of *herd* in § 50.1 to make it consistent with that change to the definition in part 77. Additionally, on April 20, 2001, we published an interim rule in the **Federal Register** (66 FR 20187–20190, Docket No. 00–102–1) in which we revised the definition of *herd* in § 93.400 as it applied to the provisions regarding the importation of ruminants. In that interim rule, we provided that for a group of animals to be considered a herd, the animals needed to be maintained as a group for at least 4 months. In this interim rule, we are adding that change to the definitions of *herd* in both §§ 50.1 and 77.2.

Herd depopulation. Prior to the effective date of this interim rule, *herd depopulation* was defined as removal by slaughter or other means of destruction of all cattle, bison, and captive cervids in a herd prior to restocking with new cattle, bison, or captive cervids. Because, as discussed above, we consider it necessary to the tuberculosis eradication program to destroy all exposed susceptible animals in an affected herd—not just cattle, bison, and captive cervids—we are revising the definition of *herd depopulation* to state that it involves the removal by slaughter or other means of destruction of all cattle, bison, and captive cervids in a herd, as well as any other exposed livestock in the herd, prior to restocking with new livestock.

Permit. Prior to the effective date of this interim rule, the definition of *permit* referred to a permit for movement of cattle, bison, captive cervids, or swine. For the same reason discussed in the preceding paragraph, we are revising the definition of *permit* to refer to a permit for movement of livestock.

Registered cattle, bison, and captive cervids. Prior to the effective date of this interim rule, § 50.1 included a definition of *registered cattle, bison, and captive cervids.* Because this interim rule provides for payment of indemnity for livestock other than cattle, bison, and captive cervids, we are revising the definition of *registered cattle, bison, and captive cervids* to refer instead to *registered livestock.*

Reactor cattle, bison, and captive cervids. The definition of *reactor cattle, bison, and captive cervids* states the manner in which cattle and bison are determined to be reactors for tuberculosis, then states that captive cervids will be determined to be reactors in the same way as cattle and bison. We are making a nonsubstantive change to combine the language regarding cattle, bison, and captive cervids to make the definition more concise.

In addition to the revisions to the existing definitions in § 50.1, discussed above, we are adding definitions of *net salvage, State animal health official,* and *State representative. Net salvage* is defined as the amount received for animals destroyed because of tuberculosis, after deducting freight, trucking, yardage, commission, slaughtering charges, and similar costs to the owner. Net salvage does not include any amounts received from Federal or State sources for indemnity. *State animal health official* is defined as the individual employed by a State who is responsible for livestock and poultry disease eradication programs in that State. *State representative* is defined as a veterinarian or other person who is employed in livestock sanitary work of a State or a political subdivision of a State and who is authorized by the State or political subdivision to perform the function involved under a memorandum of understanding with the Department.

Section 50.2—Cooperation With States

Prior to the effective date of this interim rule, § 50.2 stated that the Administrator cooperates with the proper State authorities in the eradication of tuberculosis and pays Federal indemnities for the destruction of cattle, bison, captive cervids, or swine affected (infected) with or exposed to tuberculosis. We are updating this language to make it consistent with the other provisions in part 50, by stating that the Administrator pays Federal indemnities for the destruction of cattle, bison, and captive cervids that are infected with, exposed to, or suspect for tuberculosis, and for other livestock exposed to tuberculosis.

Section 50.4—Classification of Livestock

Prior to the effective date of this interim rule, § 50.4 set forth only the criteria used to classify cattle, bison, or captive cervids as affected (infected) with, exposed to, or suspect for tuberculosis. In this interim rule, we are adding a paragraph (d) to § 50.4 to provide that the designated tuberculosis epidemiologist will determine whether livestock other than cattle, bison, or captive cervids are classified as exposed to tuberculosis by reason of association with an affected herd of cattle, bison, or captive cervids.

Section 50.6—Identification of Animals To Be Destroyed

Section 50.6 of the regulations sets forth requirements for the identification of animals that are to be destroyed because of tuberculosis. Those provisions include the requirement that, except in certain specified situations, cattle, bison, captive cervids, and swine to be destroyed because of tuberculosis must be identified within 15 days after being classified as reactors or otherwise condemned because of the disease. Consistent with the change we are making to the regulations at § 50.9 regarding the appraisal of animals for which indemnity is to be paid, we are providing in § 50.6 that the 15-day time limit for identifying animals to be destroyed because of tuberculosis applies to animals classified as either tuberculosis reactors or animals suspect for tuberculosis.

Section 50.7—Destruction of Animals

Section 50.7 of the regulations sets forth certain requirements for the destruction of cattle, bison, captive cervids, and swine destroyed because of tuberculosis and for which indemnity will be paid. We are amending § 50.7(a) and (b) to make the requirements of the section applicable to all livestock.

Section 50.8—Payment for Transportation and Disposal

Section 50.8 of the regulations provides that the Department may pay one-half or more of the expenses of transporting affected (infected),

exposed, or suspect cattle, bison, and captive cervids to slaughter because of tuberculosis or to the point where disposal will otherwise take place, and may also pay one-half or more of the expenses of destroying, burying, incinerating, rendering, or otherwise disposing of the animals. To encourage the destruction of all susceptible livestock exposed to tuberculosis, we are expanding the payment provisions of § 50.8 to include all such livestock.

Section 50.10—Report of Appraisals

Section 50.10 includes provisions for recording information regarding the appraisal of cattle, bison, captive cervids, and swine destroyed because of tuberculosis. We are amending the section to make its provisions applicable to all livestock destroyed because of tuberculosis.

Section 50.11—Report of Salvage Proceeds

Section 50.11 includes provisions for the reporting of salvage proceeds for cattle, bison, captive cervids, and swine destroyed because of tuberculosis. We are amending the section to make its provisions applicable to all livestock destroyed because of tuberculosis.

Section 50.12 Claims for indemnity

Section 50.12 includes provisions for making a claim for indemnity for cattle, bison, captive cervids, and swine destroyed because of tuberculosis. We are amending the section to make its provisions applicable to all livestock destroyed because of tuberculosis. Similarly, we are applying to all livestock destroyed because of tuberculosis the provision in § 50.12 that no charges for holding animals on the farm pending slaughter or for trucking by the owner shall be paid by the Department.

Section 50.14 Claims not Allowed

Section 50.14 provides that claims for compensation for cattle, bison, or captive cervids destroyed because of tuberculosis will not be allowed under certain conditions. For instance, compensation will be not be allowed if all cattle, bison, and captive cervids in the claimant's herd have not been tested for tuberculosis, except under certain specified conditions. Nor will claims be paid if there is substantial evidence that the owner of the animals has attempted to obtain indemnity unlawfully or improperly.

In this interim rule, we are amending § 50.14 by revising certain provisions and adding others. We are changing the introductory language of § 50.14, and also § 50.14(d) so that these sections apply to all livestock destroyed because of tuberculosis, not just to cattle, bison, and captive cervids. In § 50.14(d), we are removing references to animals condemned because of tuberculosis, consistent with changes we are making elsewhere in the part.

Prior to this interim rule, paragraph (b) of § 50.14 provided that claims for payment were not allowed if all cattle, bison, and captive cervids 2 years of age or older in the claimant's herd had not been tested for tuberculosis under APHIS or State supervision. However, in our October 2000 final rule, discussed above, we provided that, in general, animals 12 months of age or older in a herd, rather than 2 years of age or older, needed to be tested for a test to qualify as a whole herd test. Consistent with the provisions of part 77, we are applying the testing requirement in § 50.14(b) to animals 12 months of age or older, rather than 2 years of age or older.

Finally, we are adding a new paragraph (g) to § 50.14 to provide that claims for compensation for livestock other than cattle bison, and captive cervids that are destroyed because of association with herds of affected cattle, bison, or captive cervids will not be allowed if any of the following apply: (1) The livestock did not reside among the herd for a period of 4 months or more; (2) the livestock have not received a postmortem examination for tuberculosis; or (3) the livestock were added to a herd that was under quarantine for tuberculosis at the time the livestock were added to the herd, unless an approved herd plan was in effect at that time. The requirement that the livestock must have resided among the herd for a period of 4 months or more is consistent with the change we are making to the definition of herd, discussed above, to provide that a group of animals maintained on common ground will not be considered a herd unless they have been maintained together for at least 4 months.

Section 50.15 Payment Disclaimer

We are removing § 50.15 because it is no longer necessary. Prior to the effective date of this interim rule, § 50.15 stated that no claim for Federal indemnity for cattle and bison destroyed because of tuberculosis would be paid under the regulations in part 53, but rather would be paid under the regulations in part 50. That section was added a number of years ago when the provisions that are currently in part 50 were established. Those provisions have been in place long enough now to make it unnecessary to state that tuberculosis indemnity payments will not be paid under part 53.

Section 50.16 Cattle on the Island of Molokai

We are also removing § 50.16 because it is no longer necessary. Prior to the effective date of this interim rule, § 50.16 contained provisions governing the payment of indemnity for cattle on the island of Molokai in Hawaii that had been exposed to tuberculosis. These provisions provided that, under certain conditions, indemnity could be paid for exposed cattle on Molokai that were moved to a quarantined feedlot. Because tuberculosis no longer exists among livestock on Molokai, we are removing the provisions of § 50.16.

Emergency Action

This rulemaking is necessary on an emergency basis to ensure that livestock affected by tuberculosis are destroyed as soon as possible to allow for rapid detection of the disease and prevent its spread. Under these circumstances, the Administrator has determined that prior notice and opportunity for public comment are contrary to the public interest and that there is good cause under 5 U.S.C. 553 for making this rule effective less than 30 days after publication in the **Federal Register**.

We will consider comments that are received within 60 days of publication of this rule in the **Federal Register**. After the comment period closes, we will publish another document in the **Federal Register**. The document will include a discussion of any comments we receive and any amendments we are making to the rule as a result of the comments.

Executive Order 12866 and Regulatory Flexibility Act

This rule has been reviewed under Executive Order 12866. The rule has been determined to be significant for the purposes of Executive Order 12866 and, therefore, has been reviewed by the Office of Management and Budget.

Tuberculosis Eradication Strategic Plan

The program to eliminate tuberculosis in livestock in the United States was begun in 1917. Since that time, the rate of tuberculosis has been reduced from about 5 percent of susceptible livestock to today's rate of less than .0002 percent. However, the final instances of a disease are often the most difficult to find and eliminate. The action being taken in this interim rule is one component of a strategic plan APHIS has developed to complete the eradication of bovine tuberculosis in domestic livestock. In addition to the

increase in allowable indemnities for cattle and other livestock, we also have implemented, or are in the process of implementing, the following: Improvement of Federal diagnostic capabilities and national surveillance for tuberculosis; payment of indemnity for the depopulation of herds at high risk for recurrence of the disease; establishment of identification requirements for animals imported into the United States for feeding and slaughter; assistance in eradicating tuberculosis from foreign areas adjacent to the United States that are at high risk for the disease; and research, control, and surveillance of tuberculosis in wildlife, captive cervids, and zoos in the United States.

On October 23, 2000, we published in the **Federal Register** a notice of a declaration by the U.S. Secretary of Agriculture (65 FR 63227, Docket No. 00–066–1), effective October 11, 2000, that authorized the transfer and use of emergency funds to expand the tuberculosis eradication program in the United States, as described in the preceding paragraph. Approximately $1 million of the emergency funds was earmarked for the current fiscal year for livestock eligible for indemnity under this interim rule. APHIS has requested appropriated funding for such indemnity payments for future years to equal approximately $1.6 million per year.

Prior to the effective date of this interim rule, the regulations in § 50.3 set a maximum dollar figure on the amount that could be paid by APHIS for an animal destroyed because of tuberculosis. When these amounts were established, they approximated the fair market value of the animals, minus any salvage value that could be received for the animals. For the most part, however, these amounts were set in 1980 and, in recent years, even when added to the amount received by an owner for salvage, they often came to less than the appraised value of the animals. In this interim rule, we are updating the amount that can be paid for animals destroyed because of tuberculosis to once again allow for payment for the appraised value of the animals, minus salvage value.

In recent years, the disparity between the amount that APHIS could pay for an animal destroyed because of tuberculosis and its appraised value has made some owners reluctant to immediately remove a suspect animal from a herd so that confirmation could be made at slaughter of its tuberculosis status. This has sometimes hindered timely detection and traceback of tuberculous animals, because if a suspect animal were sent to slaughter immediately, and was confirmed there as being infected with, traceback of other animals in the infected animal's herd could have begun immediately, to determine whether they had come in contact with animals from other herds.

However, in instances where cattle have been classified as suspects for tuberculosis based on an official tuberculosis test, many owners have decided to wait 60 days (the minimum amount of time required between tests of cattle and bison; the minimum interval for captive cervids is 90 days) to have the animal retested, rather than have the animal destroyed as a suspect, in the hope that on the retest the animal would test negative. In cases where suspect animals have turned out to be infected with the disease, this has delayed the start of traceback procedures.

Also, because they have been unable to obtain appraised value for animals destroyed because of tuberculosis, instead of depopulating an entire herd containing animals known to be infected with or exposed to tuberculosis, owners have often chosen to remove only those animals that have tested positive for the disease. Studies have shown that up to 33 percent of herds that were released from quarantine through the test and removal method between 1985 and 1994 were found to be affected with tuberculosis by the fifth annual quarantine release test. (VanTiem J.S. and Essey M.A. (1994).—Status of the State/Federal bovine tuberculosis eradication program. *Proceedings of Annual Meeting of the U.S. Animal Health Association,* 98, 539–555.)

Livestock Other Than Cattle, Bison, Captive Cervids, and Swine

Prior to this interim rule, the tuberculosis indemnity regulations allowed for payment for cattle, bison, captive cervids, and swine. In this interim rule, we are also providing payment of indemnity for other livestock considered to be exposed to tuberculosis by reason of association with a depopulated affected herd of cattle, bison, or captive cervids. These ''other livestock'' are defined as including dairy goats and other hoofed animals, such as llamas, alpacas, and antelope. Our primary concern with such animals is that they might spread tuberculosis to cattle, bison, or captive cervids, among which they are sometimes kept. We anticipate that there will be a low likelihood that indemnity will need to be paid for such other livestock, but we are including them in this regulation to address those limited situations where such indemnity will be necessary.

Changes in Indemnity Maximums

Currently, herd owners are paid up to $750 for animals infected with tuberculosis and up to $450 for suspect and exposed animals. Initially, these indemnity limits were consistent with the relative market value of the animals. However, prevailing market values of animals vary by weight class, by breed, and by function. During the past 20 years, the value of livestock has increased while the indemnity rates have remained constant. Livestock entities also specialize in high value stock that exceed these limits of Federal indemnity. This interim rule will allow for higher indemnity payments than do the existing regulations by raising the maximum amount that will be paid for cattle, bison, captive cervids, or other livestock destroyed because of tuberculosis. As with the existing regulations, this interim rule provides for payment of indemnity up to a limit set in the regulations. However, the increase in the limit will, in most cases, provide owners with payment equal to the appraised value of the animals. Also, it will continue to allow for payment by APHIS for one-half or more of the cost of transporting affected animals or herds to diagnostic labs or to slaughter.

These changes are expected to speed up the diagnosis of tuberculosis and, if necessary, herd depopulation. This action will produce positive benefits at relatively minimal cost by hastening the eradication of an economically damaging disease from the United States. This action will have long-term positive budgetary effects. If, as expected, many owners respond to this incentive, initial indemnity costs will rise, but the rapid diagnosis and depopulation of bovine tuberculosis herds will aid in reducing costs of the National Tuberculosis Eradication Program. Additionally, both small and large herd owners will experience a positive economic impact as they will now be fairly compensated for the destruction of any suspect animals, thereby allowing the removal of any interstate quarantines. Furthermore, the value of their herds will increase, both domestically and internationally, when tuberculosis is eliminated from the United States.

Economic Analysis

As of January 1, 2000, the total number of cattle in the United States was approximately 98 million, valued at approximately $58 billion. There were 1,095,960 U.S. operations with cattle.

Over 99.1 percent of these operations were small businesses with gross annual receipts of $500,000 or less. Slaughtering is more concentrated than production of animals. Four firms accounted for 70 percent of commercial cattle slaughter, while over 99 percent of cattle are produced by small herd owners. Nearly 63 percent of slaughters occurred in plants that slaughtered more than a million steers and heifers.

There are about 112,700 bison on 1,150 premises in the United States, valued at about $250 million. Additionally, in 1999, there were about 165,000 known captive cervids, valued at about $390 million, of which 50.9 percent were deer and 48.9 percent, elk. Cervid operations vary in size and degree of commercialization, and many cervid producers also rely on other sources of income. Most, if not all, cervid operations are relatively small and earn less than $500,000.

Prevailing spot market prices of animals are likely to vary by breed, by market, and by weight class. Generally, purebred animals command much higher prices than nonpurebred animals. Registered animals earn more than nonregistered animals. Prices are likely to be influenced by whether the animal is purebred or crossbred, its grade, and by factors such as calving ease, reproductive soundness, weight and body consistency, the calving season, and the animal's general health. Market conditions can also influence the price of bred cows and heifers and bulls. High calf or dairy product prices can induce an interest in beef cow or dairy cow herd expansion, which will in turn lead to an increased demand for bred heifers.

Average grade bred heifer prices range between $800 and $2,000 and most are around $1,500. Top selling bulls are priced a little above this amount. Average grade 2-year old bison heifers sell for about $2,100 (average of Kansas and Nebraska), with average prices ranging between $975 and $2,900. The prices of 2-year old bison bulls range between $750 and $3,250, with the average price about $1,150. Average grade deer prices range between $600 and $1,000, with an average of about $800. Reported elk prices are at the higher end. Bred heifers average about $4,000, while bulls average about $5,500. All of these prices are spot market prices and are likely to vary over time depending on the market situation and the economic outlook.

There is no salvage value when a reactor or suspect animal is taken to a diagnostic laboratory for postmortem examination for bovine tuberculosis. When an animal is found to be infected, the other animals in the herd are all classified at least as exposed. A reactor is generally not salvageable because the Department's Food Safety and Inspection Service requires the meat to be cooked, and most slaughter plants currently do not cook meat from tuberculous animals. Any exposed or suspect animal with post mortem evidence of bovine tuberculosis is classified as a reactor. Exposed animals that were previously tested and had a response to a presumptive test are classified as reactors. Under the regulations prior to this interim rule, an indemnity of $750 each was paid for reactor animals.

A reactor animal can be reclassified as a suspect animal by the epidemiologist under some conditions and can go to slaughter and receive salvage value and up to $450 indemnity if there are no tuberculosis lesions. Exposed animals have been treated the same as suspect animals with regard to the amount of indemnity, and salvage has been paid accordingly. Salvage values of cattle also vary by weight, age, and type. Salvage values of bred heifers or cows range between $350 and $750, with an average of about $550. Bison bulls sell at about $2 per pound of dressed weight. The dressed weight of a bison averages about 640 pounds, with a range of between 550 and 775 pounds, with a consequent average value of about $1,300 (ranging from $1,100 to $1,450). Bison cows are of lower value and sell at about $1 per pound. Their weight is similar to that of bulls. Elk sell on average for $2 per pound of dressed weight. Elk bulls average 700 pounds, with a range of 600 and 1,000 pounds, while an elk cow averages 500 pounds, with a range of between 450 and 650 pounds. Dressed weight is about 67 percent of live weight. Thus, using an average of $2 per pound, the salvage value of an average elk bull and cow is about $938 and $670, respectively.

Given the variability of spot market prices for cattle, bison, and cervids, the current indemnity payments are not sufficient for replacement bred heifers and live bulls auctioned for breeding purpose. This rule, by making a close connection between indemnity payments of animals destroyed because of tuberculosis and their market values at the time the animals are destroyed, provides owners sufficient incentive to eliminate possibly infected animals. This change is expected to speed up the diagnosis of tuberculosis and, when necessary, subsequent herd depopulation.

Because the number of herds and cattle infected with tuberculosis is small relative to the national cattle supply, it is unlikely that this rule will measurably affect livestock prices. Disease status is only one of the components affecting prices of animals. Accelerated and expanded surveillance and testing could yield more suspect herds or animals. However, complete depopulation of an affected herd has been shown to be the most effective way of eliminating tuberculosis in the United States. Reported recurrences of bovine tuberculosis in herds after release of quarantine by test and removal have been estimated at up to 33 percent.

It is expected that final fiscal year 2001 Federal costs for tuberculosis indemnity will total approximately $775,000, as payment for approximately 1,050 animals. However, slightly more than 1,000 of those animals were from Michigan, where known pockets of infection are disproportionately high in comparison to the rest of the United States. Following the depopulation of herds in Michigan in fiscal year 2001, the number of animals eligible for indemnity in that State is expected to fall significantly.

In the remainder of the United States, there is expected to be an increase in the amount of Federal costs for animals depopulated because of tuberculosis, due to the increase in the maximum amount to be paid per animal under this interim rule, along with the likelihood that a greater percentage of owners with indemnity-eligible animals will choose to have their animals destroyed. Projected indemnity costs for each of the 3 years following the effective date of this interim rule are expected to total approximately $1.6 million, as payment for approximately 1,100 animals per year. As noted above, APHIS has requested appropriated funding for such indemnity payments for the next 3 years. Our goal during that period is to reach the point where there are no reported cases of tuberculosis in the United States. However, even at that point, surveillance for tuberculosis will continue in the United States, and it is expected that sporadic cases of tuberculosis will be detected in this country in future years, and that indemnity will need to be paid for the destruction of those affected animals.

Compared to the significance of the livestock industry in the U.S. economy, these additional short-term costs are small. The livestock industry plays a very important role in the U.S. economy. It accounts for over $60 billion of the U.S. gross domestic product. Additionally, it plays a very significant role in international trade. In 1999, the total earnings from exports of live cattle, beef and veal were

approximately $2.8 billion. The U.S. competitiveness in international markets depends to a great degree upon its reputation for producing high quality animals, a reputation that would be enhanced if bovine tuberculosis were eradicated in this country. Purchasers' perceptions of quality contribute to continued world market acceptance. Although relationships between perceived quality and export levels are not sufficiently developed to estimate impacts on trade, it is concluded that eradication of bovine tuberculosis serves the best economic interests of the nation.

Indemnity payments that will be made under this rule for the current fiscal year will come from emergency funds authorized by the Secretary of Agriculture. APHIS has requested appropriated funding for such indemnity payments for future years. This action will have no effect on other Federal agencies or local governments. State governments, however, will benefit from the rapid diagnostic sampling and, if necessary, the depopulation of affected herds. This action will have long-term 'positive budgetary effects. Additionally, both small and large herd owners will eventually experience a positive economic effect as a result of this action since they will now have an incentive to destroy suspect animals, thereby allowing the removal of quarantine. The value of their herds will increase when tuberculosis is eliminated from the United States. Expediting increased indemnity payments will further rapid detection of tuberculous animals, and thus protect against the spread of tuberculosis in the United States and accelerate eradication of the disease in U.S. livestock.

Under these circumstances, the Administrator of the Animal and Plant Health Inspection Service has determined that this action will not have a significant economic impact on a substantial number of small entities.

Executive Order 12372

This program/activity is listed in the Catalog of Federal Domestic Assistance under No. 10.025 and is subject to Executive Order 12372, which requires intergovernmental consultation with State and local officials. (See 7 CFR part 3015, subpart V.)

Executive Order 12988

This rule has been reviewed under Executive Order 12988, Civil Justice Reform. This rule: (1) Preempts all State and local laws and regulations that are in conflict with this rule; (2) has no retroactive effect; and (3) does not require administrative proceedings before parties may file suit in court challenging this rule.

Paperwork Reduction Act

This rule contains no new information or recordkeeping requirements under the Paperwork Reduction Act of 1995 (44 U.S.C. 3501 *et seq.*).

List of Subjects

9 CFR Part 50

Animal diseases, Bison, Cattle, Hogs, Indemnity payments, Reporting and recordkeeping requirements, Tuberculosis.

9 CFR Part 77

Animal diseases, Bison, Cattle, Incorporation by reference, Reporting and recordkeeping requirements, Transportation, Tuberculosis.

Accordingly, we are amending 9 CFR parts 50 and 77 as follows:

PART 50—ANIMALS DESTROYED BECAUSE OF TUBERCULOSIS

1. The authority citation for part 50 continues to read as follows:

Authority: 21 U.S.C. 111–113, 114, 114a, 114a-1, 120, 121, 125, and 134b; 7 CFR 2.22, 2.80, and 371.4.

2. In § 50.1, the definitions of *captive cervid, herd, herd depopulation, permit,* and *reactor cattle, bison, and captive cervids* are revised; the definition of *designated epidemiologist* is removed and a definition of *designated tuberculosis epidemiologist (DTE)* is added in its place; the definition of *registered cattle, bison, or captive cervids* is removed and a definition of registered livestock is added in its place; and definitions of *net salvage* and *State animal health official,* and *State representative* are added in alphabetical order, to read as follows:

§ 50.1 Definitions.

* * * * *

Captive cervid. All species of deer, elk, moose, and all other members of the family Cervidae raised or maintained in captivity for the production of meat and other agricultural products, for sport, or for exhibition, including time such animals are moved interstate; or any wild cervid that is moved interstate, during the period of time from capture until release into the wild. A captive cervid that escapes will continue to be considered a captive cervid as long as it bears an official eartag or other identification approved by the Administrator as unique and traceable with which to trace the animal back to its herd of origin.

* * * * *

Designated tuberculosis epidemiologist (DTE). A State or Federal epidemiologist designated by the Administrator to make decisions concerning the use and interpretation of diagnostic tests for tuberculosis and the management of tuberculosis affected herds. A DTE has the responsibility to determine the scope of epidemiologic investigations, determine the status of animals and herds, assist in the development of individual herd plans, and coordinate disease surveillance and eradication programs within the geographic area of the DTE's responsibility.

* * * * *

Herd. Except for livestock assembled at feedlots, any group of livestock maintained for at least 4 months on common ground for any purpose, or two or more groups of livestock under common ownership or supervision, geographically separated but that have an interchange or movement of livestock without regard to health status, as determined by the Administrator.

Herd depopulation. Removal by slaughter or other means of destruction of all cattle, bison, and captive cervids in a herd, as well as any other exposed livestock in the herd, prior to restocking with new livestock.

* * * * *

Net salvage. The amount received for animals destroyed because of tuberculosis, after deducting freight, trucking, yardage, commission, slaughtering charges, and similar costs to the owner.

* * * * *

Permit. A permit for movement of livestock directly to slaughter, listing the disease status and identification of the animal, where consigned, cleaning and disinfection requirements, and proof of slaughter certification.

* * * * *

Reactor cattle, bison, and captive cervids. Cattle, bison, and captive cervids are classified as reactors for tuberculosis in accordance with the ''Uniform Methods and Rules Bovine Tuberculosis Eradication,'' based on a positive response to an official tuberculin test.

Registered livestock. Livestock for which individual records of ancestry are maintained, and for which individual registration certificates are issued and recorded by a recognized breed association whose purpose is the improvement of the breed.

* * * * *

State animal health official. The individual employed by a State who is responsible for livestock and poultry disease control and eradication programs in that State.

State representative. A veterinarian or other person who is employed in livestock sanitary work of a State or a political subdivision of a State and who is authorized by the State or political subdivision to perform the function involved under a memorandum of understanding with the Department.

* * * * *

3. Section 50.2 is revised to read as follows:

§ 50.2 Cooperation with States.

The Administrator cooperates with the proper State authorities in the eradication of tuberculosis and pays Federal indemnities for the destruction of cattle, bison, and captive cervids that are infected with, exposed to, or suspect for tuberculosis, as well as for other livestock that are exposed to tuberculosis.

4. Section 50.3 is revised to read as follows:

§ 50.3 Payment to owners for animals destroyed.

(a) The Administrator is authorized to agree on the part of the Department to pay indemnity to owners of the following animals:

(1) Cattle, bison, or captive cervids destroyed because the animals are infected with or exposed to tuberculosis;

(2) Cattle, bison, or captive cervids that have been classified as suspect for tuberculosis, except that the payment of indemnity for the destruction of suspect cattle, bison, and captive cervids will be withheld until the tuberculosis status of the suspect animal has been determined and, if the cattle, bison, or captive cervid is found to be infected with tuberculosis, until all cattle, bison, and captive cervids 12 months of age or older in the claimant's herd have been tested for tuberculosis under APHIS or State supervision; and

(3) Other livestock destroyed because they are classified as exposed to tuberculosis by the designated tuberculosis epidemiologist by reason of an association with an affected herd of cattle, bison, or captive cervids.

(b) In each case, the joint State-Federal indemnity paid, together with the amount for net salvage the owner receives, may not exceed the appraised value of the animal, as determined in accordance with § 50.9. Additionally, the Department will in no case pay more than $3,000 for an animal that is destroyed.

5. Section 50.4 is amended as follows:

a. The section heading is revised.

b. Paragraph (a) is amended by removing the word ''affected'' and adding the word ''infected'' in its place.

c. A new paragraph (d) is added.

§ 50.4 Classification of cattle, bison, captive cervids, and other livestock as infected, exposed, or suspect.

* * * * *

(d) The designated tuberculosis epidemiologist will determine whether livestock other than cattle, bison, or captive cervids are classified as exposed to tuberculosis by reason of association with an affected herd of cattle, bison, or captive cervids.

6. Section 50.6 is revised to read as follows:

§ 50.6 Identification of animals to be destroyed because of tuberculosis.

(a) Livestock to be destroyed because of tuberculosis must be identified as follows:

(1) Livestock classified as reactors for tuberculosis must be identified within 15 days after being classified as reactors, except that the veterinarian in charge may extend the time limit for identification to 30 days when he or she receives a request for such an extension prior to the expiration date of the original 15-day period allowed and circumstances beyond the control of the owner warrant such an extension, and the Administrator may extend the time limit for identification beyond 30 days upon request in specific cases when circumstances beyond the control of the owner warrant such an extension.

(2) Livestock other than reactors for tuberculosis that are to be destroyed because of tuberculosis must be identified prior to movement from the premises of origin to the place of destruction.

(b) *Reactor cattle, bison, and captive cervids.* Reactor cattle, bison, and captive cervids must be identified by branding the letter ''T,'' at least 5 by 5 centimeters (2 by 2 inches) in size, high on the left hip near the tailhead and by attaching to the left ear an approved metal eartag bearing a serial number and the inscription ''U.S. Reactor,'' or a similar State reactor tag. Reactor cattle, bison, and captive cervids may be moved interstate to slaughter without branding if they are permanently identified by the letters ''TB'' tattooed legibly in the left ear, they are sprayed on the left ear with yellow paint, and they are either accompanied by an APHIS or State representative or moved directly to slaughter in vehicles closed with official seals. The official seals must be applied and removed by an APHIS representative, State representative, accredited veterinarian, or an individual authorized for this purpose by an APHIS representative.

(c) *Exposed cattle, bison, and captive cervids.* Exposed cattle, bison, and captive cervids must be identified by branding the letter ''S,'' at least 5 by 5 centimeters (2 by 2 inches) in size, high on the left hip near the tailhead and by attaching to either ear an approved metal eartag bearing a serial number. Exposed cattle, bison, and captive cervids may be moved interstate to slaughter without branding if they are either accompanied by an APHIS or State representative or moved directly to slaughter in vehicles closed with official seals. The official seals must be applied and removed by an APHIS representative, State representative, accredited veterinarian, or an individual authorized for this purpose by an APHIS representative.

(d) *Other exposed livestock.* Livestock other than cattle, bison, or captive cervids that are destroyed under the provisions of § 50.3 must be identified by tagging with a serially numbered metal eartag attached to either ear. All such animals to be destroyed must be transported to the place of destruction in vehicles closed with seals provided by APHIS or shall be accompanied to the place of destruction by an APHIS or State representative: *Provided, however,* that animals destroyed and disposed of under the direct supervision of an APHIS or State representative on the premises where they were exposed do not require individual identification.

§ 50.7 [Amended]

7. In § 50.7, paragraphs (a) and (b) are amended by removing the words ''Cattle, bison, captive cervids, or swine'' and adding in their place the word ''Livestock''

§ 50.8 [Amended]

8. Section 50.8, including the section heading, is amended by removing the word ''affected'' each time it appears, and adding in its place the word ''infected''; and by removing the words ''cattle, bison, and captive cervids'' each time they appear, and adding in their place the word ''livestock''.

9. Section 50.9 is revised to read as follows:

§ 50.9 Appraisals.

(a) Livestock to be destroyed because of tuberculosis under § 50.3 must be appraised within 15 days after being classified as infected with tuberculosis, except that the veterinarian in charge may extend the time limit for appraisal to 30 days when he or she receives a

request for such an extension before the end of the expiration date of the original 15-day period allowed and circumstances beyond the control of the owner warrant such an extension, and the Administrator may extend the time limit for appraisal beyond 30 days upon request in specific cases when circumstances beyond the control of the owner warrant such an extension.

(b) Animals for which indemnity is to be paid under this part must be appraised at their fair market value by an appraiser selected by APHIS. APHIS may decline to accept any appraisal that appears to it to be unreasonable or out of proportion to the value of like animals of a like quality. Should the appraisal made by the appraiser selected by APHIS be deemed inadequate by the owner of the animals, the owner will have 15 days from the receipt of the appraisal to submit to the Administrator a request for a review of the appraisal, along with the reasons why the animals should be appraised at a higher value. The decision by the Administrator regarding the value of the animals is final.

(c) When livestock to be destroyed because of tuberculosis are appraised, due consideration will be given to their breeding value as well as to their dairy or meat value. Livestock presented for payment as registered must be accompanied by their registration papers. If the registration papers are temporarily not available, or if the livestock are less than 3 years old and unregistered, the veterinarian in charge may grant a reasonable time for the presentation of their registration papers.

§ 50.10 [Amended]

10. Section 50.10 is amended by removing the words ''cattle, bison, captive cervids, and swine'' and adding in their place the word ''livestock''.

§ 50.11 [Amended]

11. Section 50.11 is amended by removing the words ''cattle, bison, captive cervids, or swine'' both times they appear, and adding in their place the word ''livestock''; and by removing the words ''cattle, bison, captive cervids, and swine'' and adding in their place the word ''livestock''.

§ 50.12 [Amended]

12. Section 50.12 is amended by removing the words ''cattle, bison, captive cervids, or swine'' both times they appear, and adding in their place the word ''livestock''.

§ 50.13 [Amended]

13. Section 50.13 is amended by removing the word ''affected'' and adding in its place the word ''infected''.

14. Section 50.14 is revised to read as follows:

§ 50.14 Claims not allowed.

Claims for compensation for livestock destroyed because of tuberculosis will not be allowed in any of the following cases:

(a) The claimant has failed to comply with any of the requirements of this part:

(b) All cattle, bison, and captive cervids 12 months of age or over in the claimant's herd have not been tested for tuberculosis under APHIS or State supervision: *Provided, however,* that cattle, bison, and captive cervids destroyed because of tuberculosis are exempt from this testing requirement if the cattle, bison, and captive cervids are subjected to a postmortem examination for tuberculosis by a Federal or State veterinarian.

(c) There is substantial evidence that the owner of the animals or the agent of the owner has in any way been responsible for any attempt to obtain indemnity funds for the animals unlawfully or improperly.

(d) At the time the cattle, bison, or captive cervids in the claimant's herd were tested for tuberculosis, the cattle, bison, captive cervids, or other livestock in the herd belonged to or were on the premises of any person to whom they had been sold, shipped, or delivered for slaughter unless or until all of the cattle, bison, captive cervids, and other livestock remaining on the premises or in the herd from which the tested cattle, bison, or captive cervids originated are tested or otherwise examined for tuberculosis in a manner satisfactory to the Administrator or his or her designated representative.

(e) If the cattle, bison, or captive cervids were added to a herd while the herd was quarantined for tuberculosis, unless an approved herd plan was in effect at the time the claim was filed. As part of the approved herd plan, cattle, bison, or captive cervids added to a herd quarantined for tuberculosis must:

(1) Be from an accredited herd, as defined in § 77.1 of this chapter; or (2)(i) Be from a herd that tested negative to an official tuberculin test, as defined in § 77.1 of this chapter, during the 60 days before the cattle, bison, or captive cervids were added to the claimant's herd; and

(ii) Have been found negative to an official tuberculin test, as defined in § 77.1 of this chapter, during the 60 days before the cattle, bison, or captive cervids were added to the claimant's herd.

(f) For exposed cattle, bison, or captive cervids destroyed during herd depopulation, if a designated tuberculosis epidemiologist has determined that other livestock in the herd have been exposed to tuberculosis by reason of association with tuberculous livestock, and those other livestock determined to have been exposed to tuberculosis have not been destroyed.

(g) For livestock other than cattle, bison, and captive cervids that are destroyed because of association with herds of affected cattle, bison, or captive cervids:

(1) If the livestock did not reside among the herd for a period of 4 months or more;

(2) If the livestock have not received a postmortem examination for tuberculosis; or

(3) If the livestock were added to a herd that was under quarantine for tuberculosis at the time the livestock were added to the herd, unless an approved herd plan was in effect at that time.

§§ 50.15 and 50.16 [Removed and Reserved]

15. Sections 50.15 and 50.16 are removed and reserved.

PART 77—TUBERCULOSIS

16. The authority citation for part 77 continues to read as follows:

Authority: 21 U.S.C. 111, 114, 114a, 115–117, 120, 121, 134b, and 134f; 7 CFR 2.22, 2.80, and 371.4.

17. In § 77.2, the definition of *herd* is revised to read as follows:

§ 77.2 Definitions.

* * * * *

Herd Except for livestock assembled at feedlots, any group of livestock maintained for at least 4 months on common ground for any purpose, or two or more groups of livestock under common ownership or supervision, geographically separated but that have an interchange or movement of livestock without regard to health status, as determined by the Administrator.

* * * * *

Done in Washington, DC, this 14th day of February 2002.

Bill Hawks,

Under Secretary for Marketing and Regulatory Programs.

[FR Doc. 02–4059 Filed 2–19–02; 8:45 am]

BILLING CODE 3410–34–U

DEPARTMENT OF TRANSPORTATION

Federal Aviation Administration

14 CFR Part 39

[Docket No. 2001–NM–140–AD; Amendment 39–12653; AD 2002–03–12]

RIN 2120–AA64

Airworthiness Directives; Bombardier Model DHC–8–400 Series Airplanes

AGENCY: Federal Aviation Administration, DOT.

ACTION: Final rule.

SUMMARY: This amendment adopts a new airworthiness directive (AD), applicable to certain Bombardier Model DHC–8–400 series airplanes, that requires a modification and a replacement affecting the fuel tanks in the wings. All affected airplanes require modification of the clearance of the fuel tank vent lines to the left and the right wing fuel tanks. Some affected airplanes also require replacement of three existing fuel probes from the center fuel tank on the left and right wings with new production fuel probes. This action is prompted by mandatory continuing airworthiness information from a foreign airworthiness authority. The actions specified by this AD are necessary to prevent inadequate clearance between the fuel tank vent lines and the adjacent rib structures of the wings or failure of certain temporary, reworked fuel probes in the center fuel tanks in the wings. Either condition could compromise the airplane's lightning protection system, possibly resulting in a fire or explosion if the airplane were hit by lightning. This action is intended to address the identified unsafe condition.

DATES: Effective March 27, 2002.

The incorporation by reference of certain publications listed in the regulations is approved by the Director of the Federal Register as of March 27, 2002.

ADDRESSES: The service information referenced in this AD may be obtained from Bombardier, Inc., Bombardier Regional Aircraft Division, 123 Garratt Boulevard, Downsview, Ontario M3K 1Y5, Canada. This information may be examined at the Federal Aviation Administration (FAA), Transport Airplane Directorate, Rules Docket, 1601 Lind Avenue, SW., Renton, Washington; or at the FAA, New York Aircraft Certification Office, 10 Fifth Street, Third Floor, Valley Stream, New York; or at the Office of the Federal Register, 800 North Capitol Street, NW., suite 700, Washington, DC.

FOR FURTHER INFORMATION CONTACT: Richard Fiesel, Aerospace Engineer, ANE–171, FAA, New York Aircraft Certification Office, 10 Fifth Street, Third Floor, Valley Stream, New York 11581; telephone (516) 256–7504; fax (516) 568–2716.

SUPPLEMENTARY INFORMATION: A proposal to amend part 39 of the Federal Aviation Regulations (14 CFR part 39) to include an airworthiness directive (AD) that is applicable to certain Bombardier Model DHC–8–400 series airplanes was published in the **Federal Register** on November 19, 2001 (66 FR 57905). That action proposed to require two actions—a modification and a replacement—affecting the fuel tanks in the wings. All affected airplanes would require modification of the clearance of the fuel tank vent lines to the left and the right wing fuel tanks. Some affected airplanes would also require replacement of three existing fuel probes from the center fuel tank on the left and right wings with new production fuel probes.

Comments

Interested persons have been afforded an opportunity to participate in the making of this amendment. No comments were submitted in response to the proposal or the FAA's determination of the cost to the public.

Explanation of Change to Final Rule

Since the issuance of the notice of proposed rulemaking (NPRM), the FAA has found that paragraph (b) of the NPRM needs to be clarified. That paragraph requires that replacement of the existing fuel probes 1, 2, and 5 with new production fuel probes be accomplished ''Prior to the accumulation of 4,000 flight hours * * *'' It was our intent that the replacement be accomplished prior to the accumulation of 4,000 ''total'' flight hours. Therefore, we have revised paragraph (b) of the final rule to specify total flight hours.

Conclusion

After careful review of the available data, the FAA has determined that air safety and the public interest require the adoption of the rule with the change described previously. The FAA has determined that this change will neither increase the economic burden on any operator nor increase the scope of the AD.

Cost Impact

There are approximately 32 airplanes of the affected design in the worldwide fleet. The FAA estimates that 15 airplanes of U.S. registry will be affected by this AD.

Thirteen airplanes of U.S. registry will be affected by the required modification of the clearance of the fuel tank vent line. It will take approximately 12 work hours to accomplish the required modification, at an average labor rate of $60 per work hour. Required parts will cost approximately $440 per airplane. Based on these figures, the cost impact of the required modification on U.S. operators is estimated to be $15,080, or $1,160 per airplane.

Seven airplanes of U.S. registry will be affected by the required replacement of the numbers 1, 2, and 5 fuel probes. It will take approximately 2 work hours to accomplish the required replacement, at an average labor rate of $60 per work hour. Required parts will be provided by the manufacturer at no cost to the operators. Based on these figures, the cost impact of the required replacement on U.S. operators is estimated to be $840, or $120 per airplane.

The cost impact figures discussed above are based on assumptions that no operator has yet accomplished any of the requirements of this AD action, and that no operator would accomplish those actions in the future if this AD were not adopted. The cost impact figures discussed in AD rulemaking actions represent only the time necessary to perform the specific actions actually required by the AD. These figures typically do not include incidental costs, such as the time required to gain access and close up, planning time, or time necessitated by other administrative actions.

Regulatory Impact

The regulations adopted herein will not have a substantial direct effect on the States, on the relationship between the national Government and the States, or on the distribution of power and responsibilities among the various levels of government. Therefore, it is determined that this final rule does not have federalism implications under Executive Order 13132.

For the reasons discussed above, I certify that this action (1) is not a ''significant regulatory action'' under Executive Order 12866; (2) is not a ''significant rule'' under DOT Regulatory Policies and Procedures (44 FR 11034, February 26, 1979); and (3) will not have a significant economic impact, positive or negative, on a substantial number of small entities under the criteria of the Regulatory Flexibility Act. A final evaluation has been prepared for this action and it is contained in the Rules Docket. A copy of it may be obtained from the Rules Docket at the location provided under the caption **ADDRESSES**.

List of Subjects in 14 CFR Part 39

Air transportation, Aircraft, Aviation safety, Incorporation by reference, Safety.

Adoption of the Amendment

Accordingly, pursuant to the authority delegated to me by the Administrator, the Federal Aviation Administration amends part 39 of the Federal Aviation Regulations (14 CFR part 39) as follows:

PART 39—AIRWORTHINESS DIRECTIVES

1. The authority citation for part 39 continues to read as follows:

Authority: 49 U.S.C. 106(g), 40113, 44701.

§ 39.13 [Amended]

2. Section 39.13 is amended by adding the following new airworthiness directive:

2002–03–12 Bombardier, Inc. (Formerly de Havilland, Inc.): Amendment 39–12653. Docket 2001–NM–140–AD.

Applicability: Model DHC–8–400 series airplanes; certificated in any category; serial numbers 4005, 4006, 4008 through 4010 inclusive, 4012 through 4015 inclusive, and 4018 through 4040 inclusive.

Note 1: This AD applies to each airplane identified in the preceding applicability provision, regardless of whether it has been modified, altered, or repaired in the area subject to the requirements of this AD. For airplanes that have been modified, altered, or repaired so that the performance of the requirements of this AD is affected, the owner/operator must request approval for an alternative method of compliance in accordance with paragraph (c) of this AD. The request should include an assessment of the effect of the modification, alteration, or repair on the unsafe condition addressed by this AD; and, if the unsafe condition has not been eliminated, the request should include specific proposed actions to address it.

Compliance: Required as indicated, unless accomplished previously.

To prevent inadequate clearance between the fuel tank vent lines and the adjacent rib structures of the wings or failure of certain temporary, reworked fuel probes in the center fuel tanks in the wings, either of which could compromise the airplane's lightning protection system, possibly resulting in a fire or explosion if the airplane were hit by lightning, accomplish the following:

Modification of Clearance of Fuel Tank Vent Lines

(a) For airplanes having serial numbers 4005, 4006, 4008 through 4010 inclusive, 4012 through 4015 inclusive, and 4018 through 4040 inclusive: Within 120 days after the effective date of this AD, modify the clearance of the fuel tank vent lines to the left and the right wing fuel tanks by wrapping 1 piece of Teflon tube around the vent line at each of 10 stations (2 pieces at station 191.200) and securing it with a clamping band (2 clamping bands at station 191.200), in accordance with the Accomplishment Instructions (including Table 1) and Figure 1 of Bombardier Alert Service Bulletin A84–28–02, dated February 7, 2001.

Replacement of Fuel Probes Numbers 1, 2, and 5

(b) For airplanes having serial numbers 4006, 4008, 4012 through 4015 inclusive, and 4018 through 4027 inclusive: Prior to the accumulation of 4,000 total flight hours or within 120 days after the effective date of this AD, whichever occurs later: Replace existing fuel probes numbers 1, 2, and 5 from the center fuel tank on the left and the right wings with new production fuel probes, in accordance with Bombardier Service Bulletin 84–28–01, Revision ''A,'' dated February 8, 2001.

Alternative Methods of Compliance

(c) An alternative method of compliance or adjustment of the compliance time that provides an acceptable level of safety may be used if approved by the Manager, New York Aircraft Certification Office (ACO), FAA. Operators shall submit their requests through an appropriate FAA Principal Maintenance Inspector, who may add comments and then send it to the Manager, New York ACO.

Note 2: Information concerning the existence of approved alternative methods of compliance with this AD, if any, may be obtained from the New York ACO.

Special Flight Permits

(d) Special flight permits may be issued in accordance with sections 21.197 and 21.199 of the Federal Aviation Regulations (14 CFR 21.197 and 21.199) to operate the airplane to a location where the requirements of this AD can be accomplished.

Incorporation by Reference

(e) The actions shall be done in accordance with Bombardier Alert Service Bulletin A84–28–02, dated February 7, 2001; and Bombardier Service Bulletin 84–28–01, Revision ''A,'' dated February 8, 2001; as applicable. This incorporation by reference was approved by the Director of the Federal Register in accordance with 5 U.S.C. 552(a) and 1 CFR part 51. Copies may be obtained from Bombardier, Inc., Bombardier Regional Aircraft Division, 123 Garratt Boulevard, Downsview, Ontario M3K 1Y5, Canada. Copies may be inspected at the FAA, Transport Airplane Directorate, 1601 Lind Avenue, SW., Renton, Washington; or at the FAA, New York Aircraft Certification Office, 10 Fifth Street, Third Floor, Valley Stream, New York; or at the Office of the Federal Register, 800 North Capitol Street, NW., suite 700, Washington, DC.

Note 3: The subject of this AD is addressed in Canadian airworthiness directive CF–2001–14, dated March 21, 2001.

Effective Date

(f) This amendment becomes effective on March 27, 2002.

Issued in Renton, Washington, on February 7, 2002.

Vi L. Lipski,

Manager, Transport Airplane Directorate, Aircraft Certification Service.

[FR Doc. 02–3586 Filed 2–19–02; 8:45 am]

BILLING CODE 4910–13–U

DEPARTMENT OF TRANSPORTATION

Federal Aviation Administration

14 CFR Part 39

[Docket No. 2001–SW–17–AD; Amendment 39–12657; AD 2002–03–16]

RIN 2120–AA64

Airworthiness Directives; Bell Helicopter Textron, Inc.-Manufactured Model OH–13E, OH–13H, and OH–13S Helicopters

AGENCY: Federal Aviation Administration, DOT.

ACTION: Final rule.

SUMMARY: This amendment supersedes an existing airworthiness directive (AD) for Model OH–13E, OH–13H, and OH–13S helicopters manufactured by Bell Helicopter Textron, Inc. (BHTI). That AD currently requires either recurring liquid penetrant or eddy current inspections of the main rotor blade grip (grip) threads for a crack. If a crack is detected, that AD requires, before further flight, replacing the cracked grip with an airworthy grip. That AD also establishes a retirement life of 1200 hours time-in-service (TIS) for each grip. This amendment adds two part numbers (P/N) to the applicability and requires only recurring eddy current inspections of the grip threads. This AD also requires reporting any results of the grip inspections to the FAA Rotorcraft Certification Office. This amendment is prompted by the issuance of an AD for the civil BHTI Model 47 helicopters and the results of an accident investigation, an operator survey conducted by a trade association, various comments concerning the subject of the current AD, and a further analysis of field service data related to the BHTI Model 47 helicopters. The actions specified by this AD are intended to prevent failure of a grip, loss of a main rotor blade, and subsequent loss of control of the helicopter.

EFFECTIVE DATE: March 27, 2002.

FOR FURTHER INFORMATION CONTACT: Marc Belhumeur, Aviation Safety Engineer, FAA, Rotorcraft Directorate, Rotorcraft Certification Office, Fort Worth, Texas 76193–0170, telephone (817) 222–5177, fax (817) 222–5783.

SUPPLEMENTARY INFORMATION: A proposal to amend 14 CFR part 39 by superseding AD 2000–18–52, Amendment 39–11984 (65 FR 68873, November 15, 2000), which applies to BHTI-manufactured Model OH–13E, OH–13H, and OH–13S helicopters, was published in the **Federal Register** on October 29, 2001 (66 FR 54453). That action proposed to supersede AD 2000–18–52 and require the following:

- For grips, P/N 47–120–135–2, 47–120–135–3, 47–120–135–5, 47–120–252–1, 47–120–252–7, 47–120–252–11, and for grips manufactured under Parts Manufacturer Approval, P/N 74–120–252–11, 74–120–135–5, R74–120–252–11, and R74–120–135–5, conduct eddy current inspections of the threads of both grips as follows:
- Within 300 hours TIS since initial installation on any helicopter or within 10 hours TIS for grips with 300 or more hours TIS, or within 200 hours TIS since last liquid penetrant or eddy current inspection, whichever comes first, conduct an eddy current inspection in accordance with the procedures in Appendix 1 of this AD or an equivalent FAA-approved procedure that contains the requirements of the procedure in Appendix 1. Thereafter, conduct the eddy current inspection at intervals not to exceed 300 hours TIS.
- Report the results of each inspection to the FAA Rotorcraft Certification Office by providing the information requested in the sample format report in Appendix 3 of this AD. Information collection requirements contained in this AD have been approved by the Office of Management and Budget (OMB) under the provisions of the Paperwork Reduction Act of 1980 (44 U.S.C. 3501 *et seq.*) and have been assigned OMB Control Number 2120–0056.
- Before further flight, replace any cracked grip with an airworthy grip. Also, the AD proposed maintaining the current retirement life of 1200 hours TIS for each affected grip.

Interested persons have been afforded an opportunity to participate in the making of this amendment. No comments were received on the proposal or the FAA's determination of the cost to the public. The FAA has determined that air safety and the public interest require the adoption of the rule as proposed. However, a non-substantive change has been made to paragraph (a)(2) of the AD that describes the OMB information collection requirements; this change will neither increase the economic burden on any operator nor increase the scope of the AD.

The FAA estimates that 300 helicopters of U.S. registry will be affected by this AD, that it will take approximately 10 work hours per helicopter to accomplish the disassembly, inspection, and reassembly of the grips from the helicopter, and that the average labor rate is $60 per work hour. Required parts, if a grip needs to be replaced, will cost approximately $4,000 per grip. There are two grips on each helicopter. Based on these figures, the total cost impact of this AD on U.S. operators is estimated to be $2,580,000, assuming one inspection per helicopter and replacement of both grips on each helicopter.

The regulations adopted herein will not have a substantial direct effect on the States, on the relationship between the national Government and the States, or on the distribution of power and responsibilities among the various levels of government. Therefore, it is determined that this final rule does not have federalism implications under Executive Order 13132.

For the reasons discussed above, I certify that this action (1) is not a ''significant regulatory action'' under Executive Order 12866; (2) is not a ''significant rule'' under DOT Regulatory Policies and Procedures (44 FR 11034, February 26, 1979); and (3) will not have a significant economic impact, positive or negative, on a substantial number of small entities under the criteria of the Regulatory Flexibility Act. A final evaluation has been prepared for this action and it is contained in the Rules Docket. A copy of it may be obtained from the Rules Docket at the FAA, Office of the Regional Counsel, Southwest Region, 2601 Meacham Blvd., Room 663, Fort Worth, Texas.

List of Subjects in 14 CFR Part 39

Air transportation, Aircraft, Aviation safety, Safety.

Adoption of the Amendment

Accordingly, pursuant to the authority delegated to me by the Administrator, the Federal Aviation Administration amends part 39 of the Federal Aviation Regulations (14 CFR part 39) as follows:

PART 39—AIRWORTHINESS DIRECTIVES

1. The authority citation for part 39 continues to read as follows:

Authority: 49 U.S.C. 106(g), 40113, 44701.

§ 39.13 [Amended]

2. Section 39.13 is amended by removing Amendment 39–11984 (65 FR 68873, November 15, 2000), and by adding a new airworthiness directive (AD), Amendment 39–12657, to read as follows:

2002–03–16 Continental Copters, Inc.; Gifton McCreay (Formerly Aerodyne Systems Engineering, Ltd., Formerly Texas Helicopter Corp.); Hawkeye Rotor and Wing Flight School; and Teryjon Aviation Inc.: Amendment 39–12657. Docket No. 2001–SW–17–AD. Supersedes AD 2000–18–52, Amendment 39–11984, Docket No. 2000–SW–36–AD.

Applicability: Model OH–13E, OH–13H, and OH–13S helicopters manufactured by Bell Helicopter Textron, Inc. (BHTI), with main rotor blade grips, part number (P/N) 47–120–135–2, 47–120–135–3, 47–120–135–5, 47–120–252–1, 47–120–252–7, 47–120–252–11, 74–120–252–11, 74–120–135–5, R74–120–252–11, or R74–120–135–5, installed, certificated in any category.

Note 1: This AD applies to each helicopter identified in the preceding applicability provision, regardless of whether it has been otherwise modified, altered, or repaired in the area subject to the requirements of this AD. For helicopters that have been modified, altered, or repaired so that the performance of the requirements of this AD is affected, the owner/operator must request approval for an alternative method of compliance in accordance with paragraph (e) of this AD. The request should include an assessment of the effect of the modification, alteration, or repair on the unsafe condition addressed by this AD; and if the unsafe condition has not been eliminated, the request should include specific proposed actions to address it.

Compliance: Required as indicated, unless accomplished previously.

To prevent failure of a main rotor blade grip (grip), separation of a main rotor blade, and subsequent loss of control of the helicopter, accomplish the following:

(a) Conduct an eddy current inspection of the threads of both grips for a crack in accordance with Appendix 1 of this AD or an equivalent FAA-approved procedure containing the requirements of the procedure in Appendix 1 within 300 hours time-in-service (TIS) since initial installation on any helicopter or within 10 hours TIS for grips with 300 or more hours TIS or within 200 hours TIS since the last liquid penetrant or eddy current inspection of grip threads, whichever comes first.

(1) Thereafter, conduct the eddy current inspection in accordance with Appendix 1 of this AD or an equivalent FAA-approved procedure containing the requirements of the procedure in Appendix 1 at intervals not to exceed 300 hours TIS.

(2) Report the results of each inspection to the FAA Rotorcraft Certification Office within 7 calendar days. Information collection requirements contained in this AD have been approved by the Office of Management and Budget (OMB) under the provisions of the Paperwork Reduction Act of 1980 (44 U.S.C. 3501 *et seq.*) and have been assigned OMB Control Number 2120–0056.

Note 2: See Appendix 2 of this AD for a list of known eddy current inspection facilities.

(b) If a crack is detected, before further flight, replace any cracked grip with an airworthy grip.

(c) On or before 1200 hours TIS, replace each grip with an airworthy grip.

(d) This AD establishes a retirement life of 1200 hours TIS for the grips, P/N 47–120–135–2, 47–120–135–3, 47–120–135–5, 47–120–252–1, 47–120–252–7, 47–120–252–11, 74–120–252–11, 74–120–135–5, R74–120–252–11, and R74–120–135–5.

(e) An alternative method of compliance or adjustment of the compliance time that provides an acceptable level of safety may be used if approved by the Manager, Rotorcraft Certification Office, FAA. Operators shall submit their requests through an FAA Principal Maintenance Inspector, who may concur or comment and then send it to the Manager, Rotorcraft Certification Office.

Note 3: Information concerning the existence of approved alternative methods of compliance with this AD, if any, may be obtained from the Rotorcraft Certification Office.

(f) Special flight permits may be issued in accordance with 14 CFR 21.197 and 21.199 to operate the helicopter to a location where the requirements of this AD can be accomplished.

(g) This amendment becomes effective on March 27, 2002.

Appendix 1

NONDESTRUCTIVE INSPECTION PROCEDURE

TASK: EDDY CURRENT (ET) INSPECTION OF MAST THREADS FOR CRACKS

1.0 AREA OF INSPECTION

1.1 The inboard inside diameter machined threads (reference Figure 1).

2.0 EQUIPMENT

2.1 Zetec Miz-20/22, Phasec 2200 or equivalent piece of equipment.

2.2 Match molded ET probe SPC-193 (100kHz) or equivalent. (See Figure 3.)

2.3 Reference standard EC-010-021, or equivalent. (See Figures 4 and 5.)

2.4 Light oil.

3.0 PERSONNEL REQUIREMENTS

3.1 Personnel performing the ET inspection must be minimally qualified to a Level II in ET inspection, certified in accordance with an industry accepted standard (such as ATA-105, NAS-410, or MIL-STD-410) or an FAA accepted company procedure.

4.0 STANDARDIZATION

4.1 Connect probe to flaw detector and turn power on.

4.2 Adjust the Phasec 2000 as shown in Table 1. Adjust all other equipment as necessary.

4.3 Adjust the V:H gain ratio to 1.5:1 - 2:1.

4.4 Monitor the crack response when moving the probe in one direction only across each EDM notch of the standard. Adjust the coarse gain for a crack response of 2 - 3 units from the smallest (0.04") notch. Record the number units of displacement and noise level for each of the EDM notches.

5.0 PRE INSPECTION

5.1 The part shall be clean and free of loose debris.

5.2 A thin coating of clean oil may be applied to the teeth to help the ET probe slide easily.

6.0 INSPECTION

6.1 Place the probe into the threaded area and slide it in the same direction as was done on the standard while monitoring the screen for root cracks. Moving the probe in the same direction produces a repeatable display that allows for more accurate flaw size determination. Scan the probe along each individual thread until all the threads are inspected. (See Figures 2 and 3.)

NONDESTRUCTIVE INSPECTION PROCEDURE (CONT.)

7.0 EVALUATION

7.1 Repeat standardization and rescan any areas where there is a vertical crack-like deflection.

7.2 If indication persists, mark the location on the part. Record the number units of displacement, phase orientation, and noise level.

8.0 ACCEPT/REJECT CRITERIA

8.1 All repeatable crack-like indications above the noise level detected shall be cause for rejection.

Zetec M12 - 20/22, Phasec 2200 Settings

Dialogue: English	Alarm Stretch: 1S	Probe: Standard
Printer: HP PCL	Alarm Shape: Off	Drive: +10dB 6.3V
◀Bright Bal▶ Low Split	Apply to: Trace 1	Analogue 1:Out Off
Graticule: Rect. A	◀Alarm action▶ Run Silent	Analogue 2: Out Off

Ser'l Conf. Alarm I/0 Time Batt.

Hi-pass: DC	CH1 Freq: 100KHz	◀ Mode: Diff 1Ch
Lo-pass: 20 Hz	CH1 PHASE: 193.0°	Display: XY
Inp. Gain: +20dB	CH1 GAIN: 46.0Db	View: Ch1
Optimize: ◀ + ▶	CH1 X:Y: X -3.0dB	Persist: Permn't

Table 1, Appendix 1

NONDESTRUCTIVE INSPECTION PROCEDURE (CONT.)

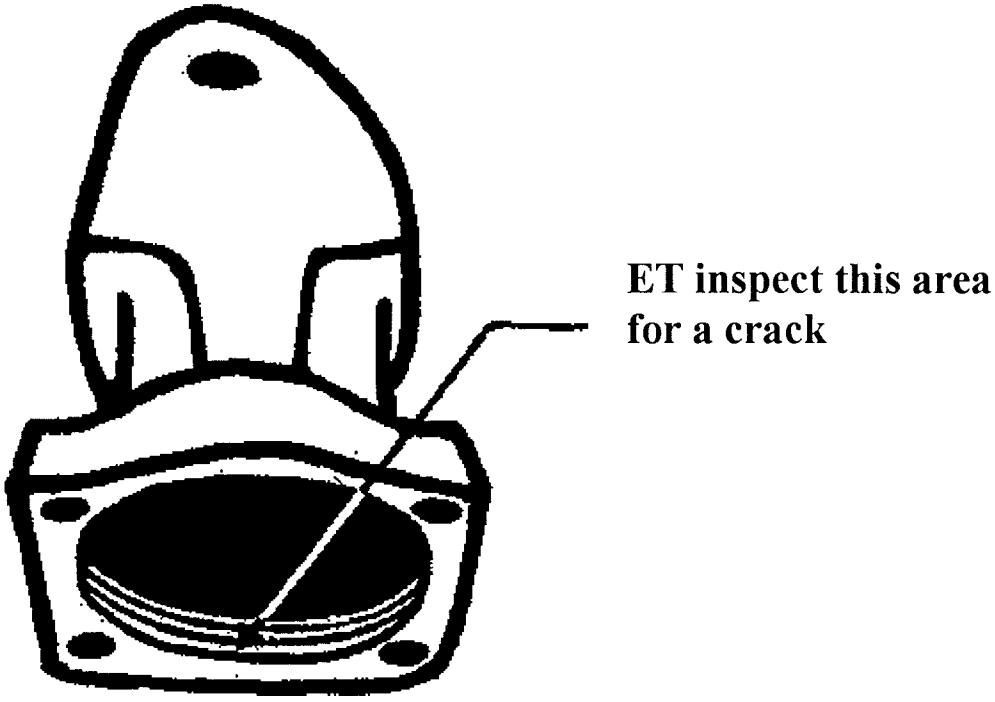

Figure 1, Appendix 1

NONDESTRUCTIVE INSPECTION PROCEDURE (CONT.)

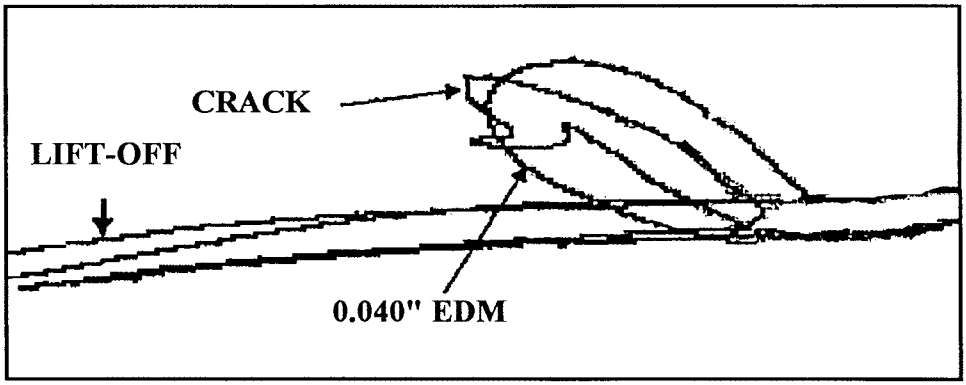

Mode Chan1 Input PosXY

A typical flaw indication appears on the eddy current monitor as shown above.

Figure 2, Appendix 1

NONDESTRUCTIVE INSPECTION PROCEDURE (CONT.)

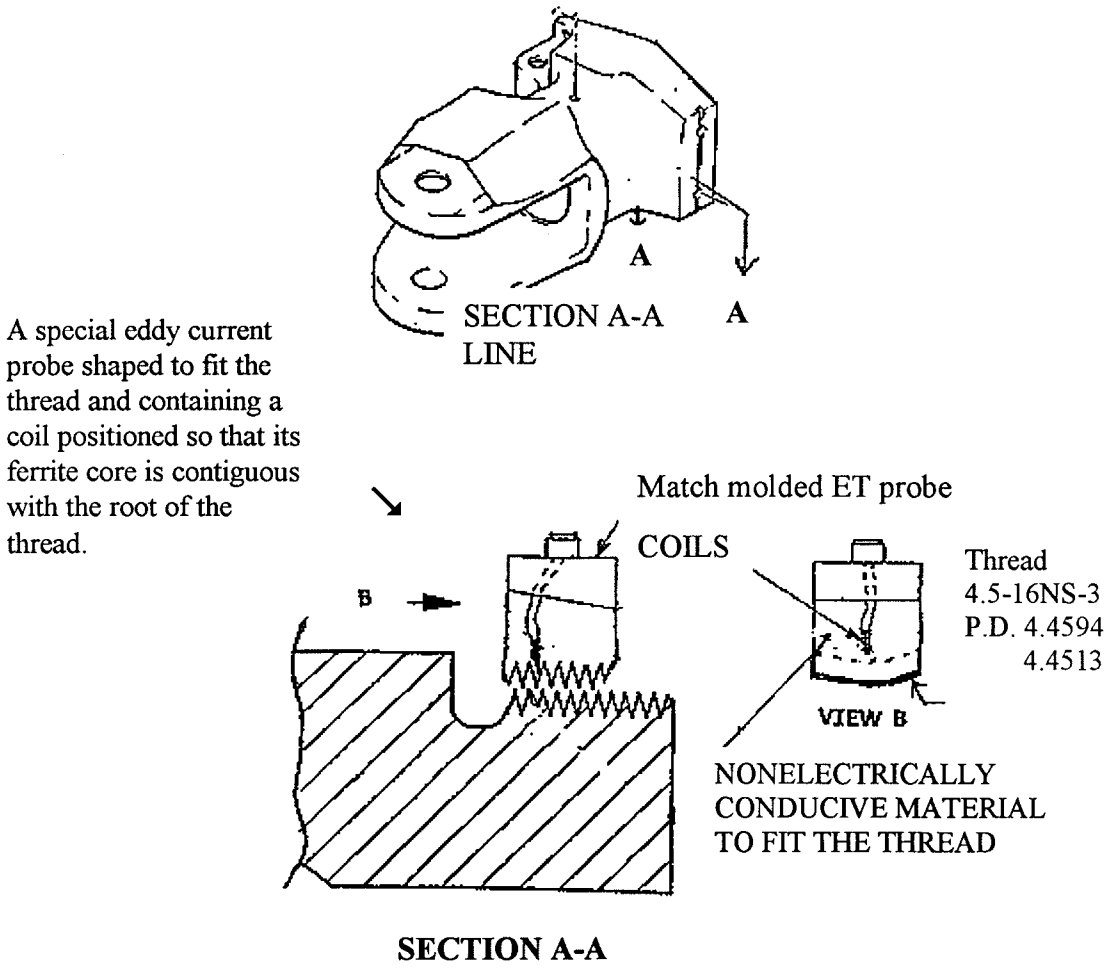

Figure 3, Appendix 1

NONDESTRUCTIVE TESTING PROCEDURE (CONT.)

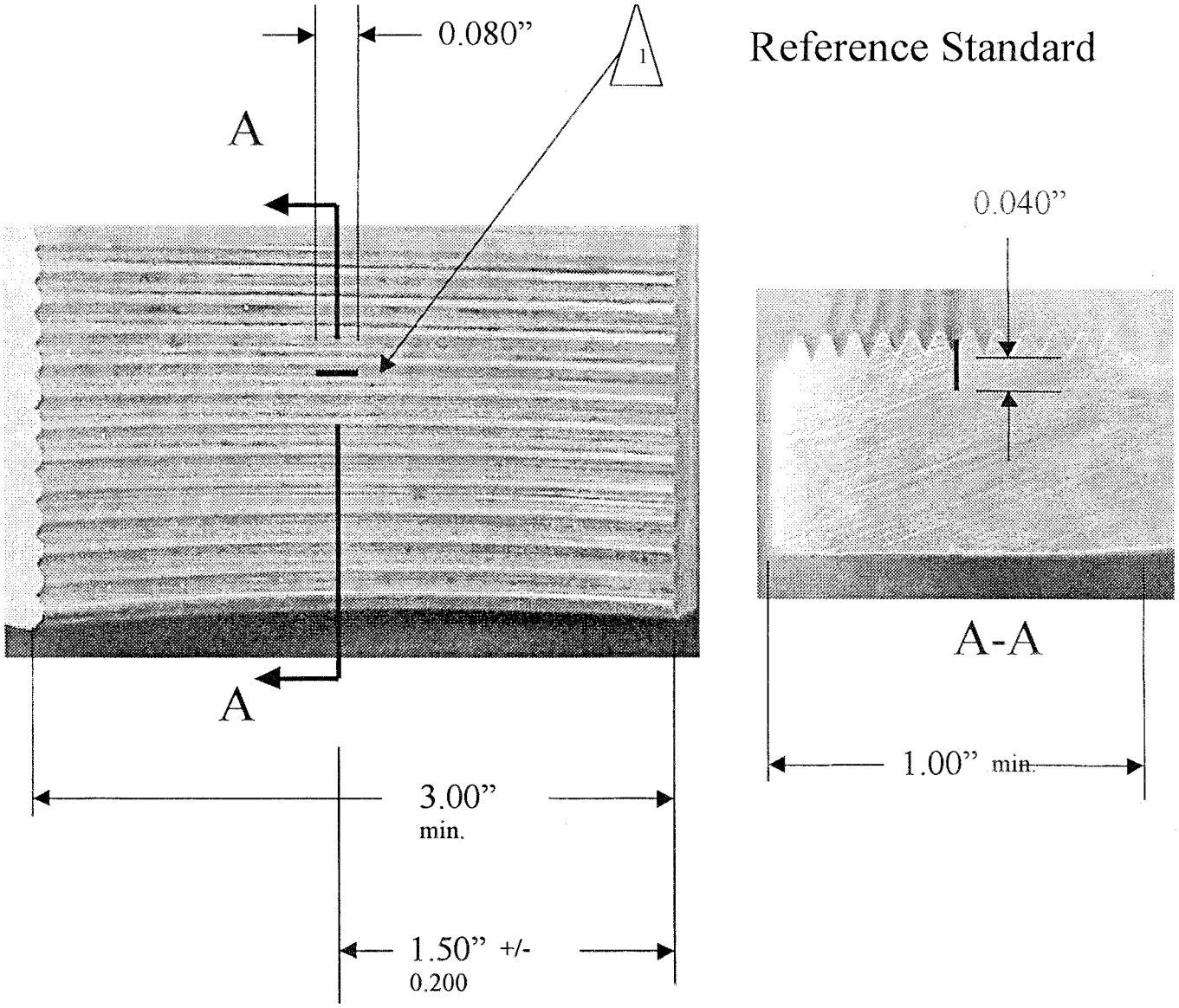

1 EDM 1 place only in thread root.
Notch width shall be 0.004 max.
All other dimensions to be +/- 0.004 from indicated.

Figure 4, Appendix 1

NONDESTRUCTIVE INSPECTION PROCEDURE (CONT.)

Reference Standard

MACHINING NOTES:

1. Standard may be machined from aluminum tube stock.
2. The standard shall contain a minimum of four teeth per the tooth dimensions specified.
3. The EDM notch shall be placed in the center most tooth root as measured across the width of the standards. There shall be no less than two teeth and one root on either side of the EDM notch.

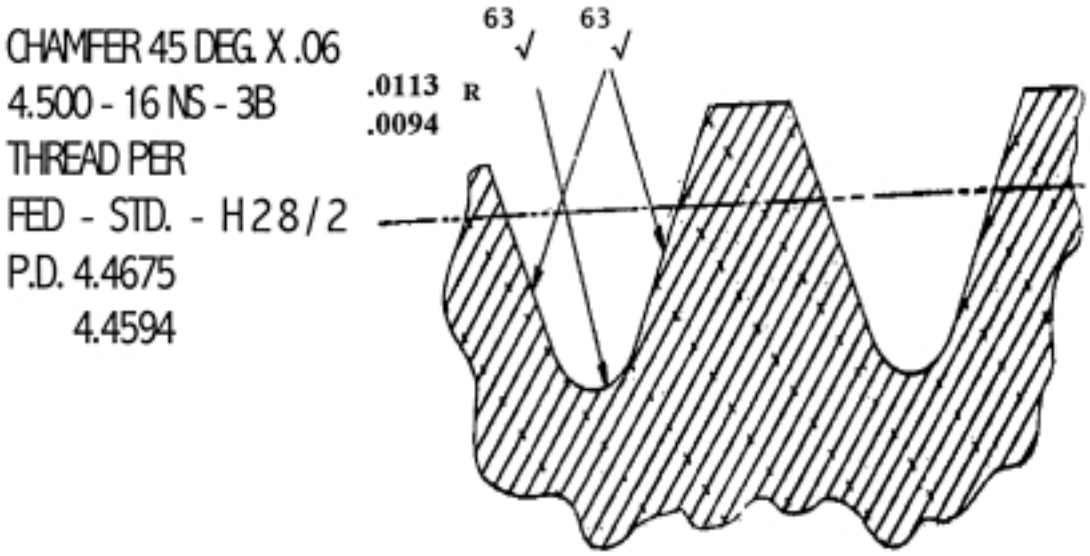

Figure 5, Appendix 1

Appendix 2

Partial List of Nondestructive Inspection Testing Facilities Identified by Operators and FAA

Met Chem Testing Laboratories Inc., 369 W. Gregson Ave. (3085 S.), Salt Lake City, Utah 84115–3440, Phone: (801) 487–0801, FAX: (801) 466–8790, *www.metchemtesting.com*.

Galactic NDT Services, 10728 D. South Pipeline RD, Hurst, Texas 76053, Phone: (800) 458–6387.

Global Testing Technologies, 1173 North Service Rd. Unit D3, Oakville Toronto Canada, Phone: (905) 847–9300, FAX: (905) 847–9330.

Paragon Services, Inc., 1015 S. West St., Wichita, KS 67213, Phone: (316) 945–5285, FAX: (316) 945–0629.

NOE Services, 8775 E. Orchard Rd. #809, Englewood, CO, Phone: (303) 741–0518, FAX: (303) 741–0519.

Applied Technical Services, Inc., 1190 Atlanta Industrial Drive, Marietta, GA 30066, Phone: (770) 423–1400, FAX: (770) 514–3299.

Rotorcraft Support, Van Nuys CA 91406, Phone: (818) 997–7667, FAX: (818) 997–1513.

Other FAA Approved repair facilities may be used.

Appendix 3

AD Compliance Inspection Report (Sample Format) Model OH–13 Main Rotor Blade Grip

Provide the following information and mail or fax it to:

Manager, Rotorcraft Certification Office, Federal Aviation Administration, Fort Worth, Texas, 76193–0170, USA, Fax: 817–222–5783.

Aircraft Registration No:
Helicopter Model:
Helicopter Serial Number:
Owner and Operator of the Helicopter:
Grip #1———Grip #2
Part Number:
Serial Number:
Hours TIS on the part at Inspection:
Crack Found (Y/N)
If yes, describe below.
Description of Findings
Who performed the inspections?
If a crack was found, describe the crack size, location, and orientation (provide a sketch or pictures with the grip part and serial number).
Provide any other comments.

Issued in Fort Worth, Texas, on February 6, 2002.

David A. Downey,

Manager, Rotorcraft Directorate, Aircraft Certification Service.

[FR Doc. 02–3851 Filed 2–19–02; 8:45 am]

BILLING CODE 4910–13–U

DEPARTMENT OF TRANSPORTATION

Federal Aviation Administration

14 CFR Part 39

[Docket No. 2001–NM–155–AD; Amendment 39–12655; AD 2002–03–14]

RIN 2120–AA64

Airworthiness Directives; Bombardier Model CL–600–2B19 Series Airplanes

AGENCY: Federal Aviation Administration, DOT.

ACTION: Final rule.

SUMMARY: This amendment adopts a new airworthiness directive (AD), applicable to certain Bombardier Model CL–600–2B19 series airplanes, that requires repetitive inspections for cracking of the left and right lower wing planks, and repair, if necessary. The actions specified by this AD are intended to find and fix such cracking, which could result in reduced structural integrity of the wing. This action is intended to address the identified unsafe condition.

DATES: Effective March 27, 2002.

The incorporation by reference of certain publications listed in the regulations is approved by the Director of the Federal Register as of March 27, 2002.

ADDRESSES: The service information referenced in this AD may be obtained from Bombardier, Inc., Canadair, Aerospace Group, P.O. Box 6087, Station Centre-ville, Montreal, Quebec H3C 3G9, Canada. This information may be examined at the Federal Aviation Administration (FAA), Transport Airplane Directorate, Rules Docket, 1601 Lind Avenue, SW., Renton, Washington; or at the FAA, New York Aircraft Certification Office, 10 Fifth Street, Third Floor, Valley Stream, New York; or at the Office of the Federal Register, 800 North Capitol Street, NW., suite 700, Washington, DC.

FOR FURTHER INFORMATION CONTACT: Serge Napoleon, Aerospace Engineer, Airframe and Propulsion Branch, ANE–171, FAA, New York Aircraft Certification Office, 10 Fifth Street, Third Floor, Valley Stream, New York 11581; telephone (516) 256–7512; fax (516) 568–2716.

SUPPLEMENTARY INFORMATION: A proposal to amend part 39 of the Federal Aviation Regulations (14 CFR part 39) to include an airworthiness directive (AD) that is applicable to certain Bombardier Model CL–600–2B19 series airplanes was published in the **Federal Register** on October 30, 2001 (66 FR 54725). That action proposed to require repetitive inspections for cracking of the left and right lower wing planks, and repair, if necessary.

Comments

Interested persons have been afforded an opportunity to participate in the making of this amendment. No comments were submitted in response to the proposal or the FAA's determination of the cost to the public.

Conclusion

The FAA has determined that air safety and the public interest require the adoption of the rule as proposed.

Interim Action

This is considered to be interim action until final action is identified, at which time the FAA may consider further rulemaking.

Cost Impact

The FAA estimates that 214 airplanes of U.S. registry will be affected by this AD, that it will take approximately 1 work hour per airplane to accomplish the required inspections, and that the average labor rate is $60 per work hour. Based on these figures, the cost impact of the AD on U.S. operators is estimated to be $12,840, or $60 per airplane, per inspection cycle.

The cost impact figure discussed above is based on assumptions that no operator has yet accomplished any of the requirements of this AD action, and that no operator would accomplish those actions in the future if this AD were not adopted. The cost impact figures discussed in AD rulemaking actions represent only the time necessary to perform the specific actions actually required by the AD. These figures typically do not include incidental costs, such as the time required to gain access and close up, planning time, or time necessitated by other administrative actions.

Regulatory Impact

The regulations adopted herein will not have a substantial direct effect on the States, on the relationship between the national Government and the States, or on the distribution of power and responsibilities among the various levels of government. Therefore, it is determined that this final rule does not have federalism implications under Executive Order 13132.

For the reasons discussed above, I certify that this action (1) is not a ''significant regulatory action'' under Executive Order 12866; (2) is not a ''significant rule'' under DOT Regulatory Policies and Procedures (44 FR 11034, February 26, 1979); and (3) will not have a significant economic impact, positive or negative, on a substantial number of small entities under the criteria of the Regulatory Flexibility Act. A final evaluation has been prepared for this action and it is contained in the Rules Docket. A copy of it may be obtained from the Rules Docket at the location provided under the caption **ADDRESSES.**

List of Subjects in 14 CFR Part 39

Air transportation, Aircraft, Aviation safety, Incorporation by reference, Safety.

Adoption of the Amendment

Accordingly, pursuant to the authority delegated to me by the Administrator, the Federal Aviation Administration amends part 39 of the Federal Aviation Regulations (14 CFR part 39) as follows:

PART 39—AIRWORTHINESS DIRECTIVES

1. The authority citation for part 39 continues to read as follows:

Authority: 49 U.S.C. 106(g), 40113, 44701.

§ 39.13 [Amended]

2. Section 39.13 is amended by adding the following new airworthiness directive:

2002–03–14 Bombardier, Inc. (Formerly Canadair): Amendment 39–12655. Docket 2001–NM–155–AD.

Applicability: Model CL–600–2B19 series airplanes, serial numbers 7003 through 7999 inclusive, certificated in any category.

Note 1: This AD applies to each airplane identified in the preceding applicability provision, regardless of whether it has been modified, altered, or repaired in the area subject to the requirements of this AD. For airplanes that have been modified, altered, or repaired so that the performance of the requirements of this AD is affected, the owner/operator must request approval for an alternative method of compliance in accordance with paragraph (d) of this AD. The request should include an assessment of the effect of the modification, alteration, or repair on the unsafe condition addressed by this AD; and, if the unsafe condition has not been eliminated, the request should include specific proposed actions to address it.

Compliance: Required as indicated, unless accomplished previously.

To find and fix cracking of the left and right lower wing planks, which could result in reduced structural integrity of the wing, accomplish the following:

Repetitive Inspections

(a) Perform an external detailed visual inspection for cracking of the left and right lower wing planks in the area of the rear spar and wing station 148.019, according to Part 2, Accomplishment Instructions, of Bombardier Alert Service Bulletin A601R–57–031, Revision ''A,'' including Appendix A, dated March 28, 2001. Do the initial inspection at the time shown in paragraph (a)(1), (a)(2), or (a)(3) of this AD, as applicable; and repeat the inspection at least every 5,000 flight cycles.

Note 2: For the purposes of this AD, a detailed visual inspection is defined as: ''An intensive visual examination of a specific structural area, system, installation, or assembly to detect damage, failure, or irregularity. Available lighting is normally supplemented with a direct source of good lighting at intensity deemed appropriate by the inspector. Inspection aids such as mirror, magnifying lenses, etc., may be used. Surface cleaning and elaborate access procedures may be required.''

Compliance Times for Inspection

(1) For airplanes that have accumulated 6,500 total flight cycles or less as of the effective date of this AD: Inspect prior to the accumulation of 7,000 total flight cycles.

(2) For airplanes that have accumulated 6,501 total flight cycles, but fewer than 13,500 total flight cycles, as of the effective date of this AD: Inspect prior to the accumulation of 13,700 total flight cycles, or within 500 flight cycles after the effective date of this AD, whichever occurs first.

(3) For airplanes that have accumulated 13,500 total flight cycles or more as of the effective date of this AD: Inspect within 200 flight cycles after the effective date of this AD.

Note 3: Inspections accomplished prior to the effective date of this AD in accordance with Bombardier Alert Service Bulletin A601R–57–031, dated March 22, 2001, are considered acceptable for compliance with paragraph (a) of this AD.

Note 4: There is no terminating action available at this time for the repetitive inspections required by paragraph (a) of this AD.

Repair

(b) If any crack is found during any inspection according to paragraph (a) of this AD: Before further flight, repair per a method approved by either the Manager, New York Aircraft Certification Office (ACO), FAA; or Transport Canada Civil Aviation (or its delegated agent).

Reporting Requirement

(c) Submit a report of inspection findings (both positive and negative) to Bombardier Aerospace Technical Help Desk, fax (514) 855–8500, at the applicable time specified in paragraph (c)(1) or (c)(2) of this AD. Information collection requirements contained in this regulation have been approved by the Office of Management and Budget (OMB) under the provisions of the Paperwork Reduction Act of 1980 (44 U.S.C. 3501 *et seq.*) and have been assigned OMB Control Number 2120–0056.

(1) For airplanes on which the inspection is accomplished after the effective date of this AD: Submit the report within 30 days after performing the inspection required by paragraph (a) of this AD.

(2) For airplanes on which the inspection has been accomplished prior to the effective date of this AD: Submit the report within 30 days after the effective date of this AD.

Alternative Methods of Compliance

(d) An alternative method of compliance or adjustment of the compliance time that provides an acceptable level of safety may be used if approved by the Manager, New York ACO. Operators shall submit their requests through an appropriate FAA Principal Maintenance Inspector, who may add comments and then send it to the Manager, New York ACO.

Note 5: Information concerning the existence of approved alternative methods of compliance with this AD, if any, may be obtained from the New York ACO.

Special Flight Permits

(e) Special flight permits may be issued in accordance with sections 21.197 and 21.199 of the Federal Aviation Regulations (14 CFR 21.197 and 21.199) to operate the airplane to a location where the requirements of this AD can be accomplished.

Incorporation by Reference

(f) The inspections shall be done in accordance with Bombardier Alert Service Bulletin A601R–57–031, Revision ''A,'' including Appendix A, dated March 28, 2001. This incorporation by reference was approved by the Director of the Federal Register in accordance with 5 U.S.C. 552(a) and 1 CFR part 51. Copies may be obtained from Bombardier, Inc., Canadair, Aerospace Group, P.O. Box 6087, Station Centre-ville, Montreal, Quebec H3C 3G9, Canada. Copies may be inspected at the FAA, Transport Airplane Directorate, 1601 Lind Avenue, SW., Renton, Washington; or at the FAA, New York Aircraft Certification Office, 10 Fifth Street, Third Floor, Valley Stream, New York; or at the Office of the Federal Register, 800 North Capitol Street, NW., suite 700, Washington, DC.

Note 6: The subject of this AD is addressed in Canadian airworthiness directive CF–2001–15, dated March 30, 2001.

Effective Date

(g) This amendment becomes effective on March 27, 2002.

Issued in Renton, Washington, on February 8, 2002.

Vi L. Lipski,

Manager, Transport Airplane Directorate, Aircraft Certification Service.

[FR Doc. 02–3611 Filed 2–19–02; 8:45 am]

BILLING CODE 4910–13–U

DEPARTMENT OF TRANSPORTATION

Federal Aviation Administration

14 CFR Part 39

[Docket No. 2001–NM–143–AD; Amendment 39–12654; AD 2002–03–13]

RIN 2120–AA64

Airworthiness Directives; Short Brothers Model SD3–60, SD3–60 SHERPA, and SD3–SHERPA Series Airplanes

AGENCY: Federal Aviation Administration, DOT.

ACTION: Final rule.

SUMMARY: This amendment adopts a new airworthiness directive (AD), applicable to all Short Brothers Model SD3–60, SD3–60 SHERPA, and SD3–SHERPA series airplanes, that requires a one-time inspection of the wiring harness and power cables of the heated windshield to detect inadequate clearance, inadequate support, or chafing. This amendment also requires corrective action (including re-routing for adequate clearance or replacing damaged cables, as applicable), if necessary. The actions specified by this AD are intended to prevent chafing or damage of the power cables of the heated windshield, which could cause arcing and result in smoke and fire in the cockpit. This action is intended to address the identified unsafe condition.

DATES: Effective March 27, 2002.

The incorporation by reference of certain publications listed in the regulations is approved by the Director of the Federal Register as of March 27, 2002.

ADDRESSES: The service information referenced in this AD may be obtained from Short Brothers, Airworthiness & Engineering Quality, P.O. Box 241, Airport Road, Belfast BT3 9DZ, Northern Ireland. This information may be examined at the Federal Aviation Administration (FAA), Transport Airplane Directorate, Rules Docket, 1601 Lind Avenue, SW., Renton, Washington; or at the Office of the Federal Register, 800 North Capitol Street, NW., suite 700, Washington, DC.

FOR FURTHER INFORMATION CONTACT: Todd Thompson, Aerospace Engineer, International Branch, ANM–116, FAA, Transport Airplane Directorate, 1601 Lind Avenue, SW., Renton, Washington, 98055–4056; telephone (425) 227–1175; fax (425) 227–1149.

SUPPLEMENTARY INFORMATION: A proposal to amend part 39 of the Federal Aviation Regulations (14 CFR part 39) to include an airworthiness directive (AD) that is applicable to all Short Brothers Model SD3–60, SD3–60 SHERPA, and SD3-SHERPA series airplanes was published in the **Federal Register** on November 23, 2001 (66 FR 58680). That action proposed to require a one-time inspection of the two power cables to the heated windshield to detect inadequate clearance, chafing, and inadequate support. The action also proposed to require corrective action, if necessary, including increasing the clearance, providing additional support, re-routing, and replacing power cables, as applicable.

Comments

Interested persons have been afforded an opportunity to participate in the making of this amendment. No comments were submitted in response to the proposal or the FAA's determination of the cost to the public.

Explanation of Changes to Final Rule

The statement of unsafe condition in the ''Summary'' section and subsequent sections of this AD have been changed for clarification to include a reference to the wiring harness of the power cables and to clarify certain wording.

Paragraph (a) of the proposed rule specifies a general visual inspection of the power cables to the heated windshield to detect inadequate clearance, chafing, and inadequate support. However, paragraph (a) of the proposed rule does not make clear that the inspection includes inspecting the wiring harness and ensuring that the harness is securely supported. Therefore, for clarification, we have changed paragraph (a) of this final rule to require a general visual inspection of the wiring harness and power cables of the heated windshield to detect inadequate clearance between the cables and the flight instruments, and to ensure that the harness is securely supported and no chafing of the protective cover on the cables is evident.

In addition, we have changed paragraphs (b), (c), and (d) of the proposed rule to paragraphs (a)(1), (a)(2), and (a)(3) in this final rule, as they are subparagraphs of paragraph (a), and we have clarified certain wording in those paragraphs. We find that these changes do not expand the scope of the proposed AD but merely provide clarification of the requirements of this AD.

Conclusion

After careful review of the available data, the FAA has determined that air safety and the public interest require the adoption of the rule with the changes described previously. The FAA has determined that these changes will neither increase the economic burden on any operator nor increase the scope of the AD.

Cost Impact

The FAA estimates that 78 airplanes of U.S. registry will be affected by this AD, that it will take approximately 1 work hour per airplane to accomplish the required inspection, and that the average labor rate is $60 per work hour. Based on these figures, the cost impact of the AD on U.S. operators is estimated to be $4,680, or $60 per airplane.

The cost impact figure discussed above is based on assumptions that no operator has yet accomplished any of the requirements of this AD action, and that no operator would accomplish those actions in the future if this AD were not adopted. The cost impact figures discussed in AD rulemaking actions represent only the time necessary to perform the specific actions actually required by the AD. These figures typically do not include incidental costs, such as the time required to gain access and close up, planning time, or time necessitated by other administrative actions.

Regulatory Impact

The regulations adopted herein will not have a substantial direct effect on the States, on the relationship between the national Government and the States, or on the distribution of power and responsibilities among the various levels of government. Therefore, it is determined that this final rule does not have federalism implications under Executive Order 13132.

For the reasons discussed above, I certify that this action (1) is not a ''significant regulatory action'' under Executive Order 12866; (2) is not a ''significant rule'' under DOT Regulatory Policies and Procedures (44 FR 11034, February 26, 1979); and (3) will not have a significant economic impact, positive or negative, on a substantial number of small entities under the criteria of the Regulatory Flexibility Act. A final evaluation has been prepared for this action and it is contained in the Rules Docket. A copy of it may be obtained from the Rules Docket at the location provided under the caption **ADDRESSES**.

List of Subjects in 14 CFR Part 39

Air transportation, Aircraft, Aviation safety, Incorporation by reference, Safety.

Adoption of the Amendment

Accordingly, pursuant to the authority delegated to me by the Administrator, the Federal Aviation Administration amends part 39 of the Federal Aviation Regulations (14 CFR part 39) as follows:

PART 39—AIRWORTHINESS DIRECTIVES

1. The authority citation for part 39 continues to read as follows:

Authority: 49 U.S.C. 106(g), 40113, 44701.

§ 39.13 [Amended]

2. Section 39.13 is amended by adding the following new airworthiness directive:

2002–03–13 Short Brothers PLC: Amendment 39–12654. Docket 2001–NM–143–AD.

Applicability: All Model SD3–60, SD3–60 SHERPA, and SD3–SHERPA series airplanes; certificated in any category.

Note 1: This AD applies to each airplane identified in the preceding applicability provision, regardless of whether it has been modified, altered, or repaired in the area subject to the requirements of this AD. For airplanes that have been modified, altered, or repaired so that the performance of the requirements of this AD is affected, the owner/operator must request approval for an alternative method of compliance in accordance with paragraph (b) of this AD. The request should include an assessment of the effect of the modification, alteration, or repair on the unsafe condition addressed by this AD; and, if the unsafe condition has not been eliminated, the request should include specific proposed actions to address it.

Compliance: Required as indicated, unless accomplished previously.

To prevent chafing or damage of the power cables of the heated windshield, which could cause arcing and result in smoke and fire in the cockpit, accomplish the following:

Inspection and Corrective Action

(a) Within 90 days after the effective date of this AD: Perform a general visual inspection of the wiring harness and power cables of the heated windshield to detect inadequate clearance between the cables and the flight instruments, and to ensure that the harness is securely supported and no chafing of the protective cover on the cables is evident, in accordance with Short Brothers Service Bulletin SD3 SHERPA–30–2 (for Model SD3 SHERPA series airplanes), SD360 SHERPA–30–2 (for Model SD3–60 SHERPA series airplanes), or SD360–30–26 (for Model SD3–60 series airplanes); all dated April 2, 2001; as applicable. If no evidence of chafing is found and clearance and support of the power cables is adequate, no further action is needed.

Note 2: For the purposes of this AD, a general visual inspection is defined as: ''A visual examination of an interior or exterior area, installation, or assembly to detect obvious damage, failure, or irregularity. This level of inspection is made under normally available lighting conditions such as daylight, hangar lighting, flashlight, or drop-light, and may require removal or opening of access panels or doors. Stands, ladders, or platforms may be required to gain proximity to the area being checked.''

(1) If no evidence of chafing is found, but clearance or support of the harness is inadequate: Prior to further flight, re-route the power cable for adequate clearance or provide additional support of the cable harness, as applicable, in accordance with Short Brothers Service Bulletin SD3 SHERPA–30–2 (for Model SD3 SHERPA series airplanes), SD360 SHERPA–30–2 (for Model SD3–60 SHERPA series airplanes), or SD360–30–26 (for Model SD3–60 series airplanes); all dated April 2, 2001; as applicable.

(2) If evidence of chafing is found, but there is no damage to the outer nylon protective cover resulting in exposure of the glass fiber braid: Prior to further flight, re-route the power cables for adequate clearance, in accordance with Short Brothers Service Bulletin SD3 SHERPA–30–2 (for Model SD3 SHERPA series airplanes), SD360 SHERPA–30–2 (for Model SD3–60 SHERPA series airplanes), or SD360–30–26 (for Model SD3–60 series airplanes); all dated April 2, 2001; as applicable.

(3) If evidence of chafing is found, and there is damage to the outer nylon protective cover resulting in exposure of the glass fiber braid: Prior to further flight, replace the damaged power cable with a new cable, in accordance with Short Brothers Service Bulletin SD3 SHERPA–30–2 (for Model SD3 SHERPA series airplanes), SD360 SHERPA–30–2 (for Model SD3–60 SHERPA series airplanes), or SD360–30–26 (for Model SD3–60 series airplanes); all dated April 2, 2001; as applicable.

Alternative Methods of Compliance

(b) An alternative method of compliance or adjustment of the compliance time that provides an acceptable level of safety may be used if approved by the Manager, International Branch, ANM–116, Transport Airplane Directorate, FAA. Operators shall submit their requests through an appropriate FAA Principal Maintenance Inspector, who may add comments and then send it to the Manager, International Branch, ANM–116.

Note 3: Information concerning the existence of approved alternative methods of compliance with this AD, if any, may be obtained from the International Branch, ANM–116.

Special Flight Permits

(c) Special flight permits may be issued in accordance with sections 21.197 and 21.199 of the Federal Aviation Regulations (14 CFR 21.197 and 21.199) to operate the airplane to a location where the requirements of this AD can be accomplished.

Incorporation by Reference

(d) The actions shall be done in accordance with Short Brothers Service Bulletin SD3 SHERPA–30–2, dated April 2, 2001; Short Brothers Service Bulletin SD360 SHERPA–30–2, dated April 2, 2001; and Short Brothers Service Bulletin SD360–30–26, dated April 2, 2001; as applicable. This incorporation by reference was approved by the Director of the Federal Register in accordance with 5 U.S.C. 552(a) and 1 CFR part 51. Copies may be obtained from Short Brothers, Airworthiness & Engineering Quality, P.O. Box 241, Airport Road, Belfast BT3 9DZ, Northern Ireland. Copies may be inspected at the FAA, Transport Airplane Directorate, 1601 Lind Avenue, SW., Renton, Washington; or at the Office of the Federal Register, 800 North Capitol Street, NW., suite 700, Washington, DC.

Note 4: The subject of this AD is addressed in British airworthiness directive 001–04–2001.

Effective Date

(e) This amendment becomes effective on March 27, 2002.

Issued in Renton, Washington, on February 7, 2002.

Vi L. Lipski,

Manager, Transport Airplane Directorate, Aircraft Certification Service.

[FR Doc. 02–3587 Filed 2–19–02; 8:45 am]

BILLING CODE 4910–13–P

DEPARTMENT OF TRANSPORTATION

Federal Aviation Administration

14 CFR Part 39

[Docket No. 2001–NM–185–AD; Amendment 39–12656; AD 2002–03–15]

RIN 2120–AA64

Airworthiness Directives; Dornier Model 328–100 and –300 Series Airplanes

AGENCY: Federal Aviation Administration, DOT.

ACTION: Final rule.

SUMMARY: This amendment adopts a new airworthiness directive (AD), applicable to certain Dornier Model 328–100 and –300 series airplanes, that requires testing of the left- and right-hand potentiometer levers of the aileron flight control system, and follow-on or corrective action, as applicable. This amendment is necessary to prevent detachment of an aileron potentiometer lever, which could result in jamming of the elevator and/or aileron flight control systems and consequent reduced controllability of the airplane. This action is intended to address the identified unsafe condition.

DATES: Effective March 27, 2002.

The incorporation by reference of certain publications listed in the regulations is approved by the Director of the Federal Register as of March 27, 2002.

ADDRESSES: The service information referenced in this AD may be obtained from **Fairchild Dornier, Dornier** Luftfahrt GmbH, P.O. Box 1103, D–82230 Wessling, Germany. This information may be examined at the FAA, Transport Airplane Directorate, 1601 Lind Avenue, SW., Renton, Washington; or at the Office of the Federal Register, 800 North Capitol Street, NW., suite 700, Washington, DC.

FOR FURTHER INFORMATION CONTACT: Tom Groves, Aerospace Engineer, International Branch, ANM–116, FAA, Transport Airplane Directorate, 1601 Lind Avenue, SW., Renton, Washington 98055–4056; telephone (425) 227–1503; fax (425) 227–1149.

SUPPLEMENTARY INFORMATION: A proposal to amend part 39 of the Federal Aviation Regulations (14 CFR part 39) to include an airworthiness directive (AD) that is applicable to certain Dornier Model 328–100 and –300 series airplanes was published in the **Federal Register** on September 25, 2001 (66 FR 48989). That action proposed to require testing of the left- and right-hand potentiometer levers of the aileron flight

control system, and follow-on or corrective action, as applicable.

Public Comments

Interested persons have been afforded an opportunity to participate in the making of this amendment. Due consideration has been given to the single comment received.

Request To Revise Paragraph (c)(2) of the Proposed Rule

One commenter, the airplane manufacturer, states that a new potentiometer lever, having part number (P/N) 001A271A2062 002, has been developed and approved. The new lever prevents detachment of an aileron potentiometer lever, which could result in jamming of the elevator and/or aileron flight control systems. The FAA infers that the commenter is requesting that the FAA add the new lever P/N to paragraph (c) of the proposed rule.

The FAA agrees. We have revised paragraph (c)(1) and (c)(2) of the AD to permit operators to comply with the requirements of that paragraph by replacing the potentiometer lever with a new lever, P/N 001A271A2062 002, or with P/N 001A271A2062 000, which was the ''new'' lever P/N at the time the NPRM was issued. Although the lever P/Ns were not referred to in the NPRM, we have added them to the final rule to help clarify and differentiate the description of a ''new'' potentiometer lever. Paragraph (c)(2) of the final rule has also been revised to specify that operators may replace the potentiometer levers by using either the method provided by subparagraph (c)(2)(i) or (c)(2)(ii) of the final rule.

Conclusion

After careful review of the available data, including the comment noted above, the FAA has determined that air safety and the public interest require the adoption of the rule with the changes described previously. The FAA has determined that these changes will neither increase the economic burden on any operator nor increase the scope of the AD.

Cost Impact

The FAA estimates that 89 Dornier Model 328–100 and –300 series airplanes of U.S. registry will be affected by this AD, that it will take approximately 2 work hours per airplane to accomplish the required test, and that the average labor rate is $60 per work hour. Based on these figures, the cost impact of the AD on U.S. operators is estimated to be $10,680, or $120 per airplane, per test cycle.

The cost impact figure discussed above is based on assumptions that no operator has yet accomplished any of the requirements of this AD action, and that no operator would accomplish those actions in the future if this AD were not adopted. The cost impact figures discussed in AD rulemaking actions represent only the time necessary to perform the specific actions actually required by the AD. These figures typically do not include incidental costs, such as the time required to gain access and close up, planning time, or time necessitated by other administrative actions.

Regulatory Impact

The regulations adopted herein will not have a substantial direct effect on the States, on the relationship between the national Government and the States, or on the distribution of power and responsibilities among the various levels of government. Therefore, it is determined that this final rule does not have federalism implications under Executive Order 13132.

For the reasons discussed above, I certify that this action (1) is not a ''significant regulatory action'' under Executive Order 12866; (2) is not a ''significant rule'' under DOT Regulatory Policies and Procedures (44 FR 11034, February 26, 1979); and (3) will not have a significant economic impact, positive or negative, on a substantial number of small entities under the criteria of the Regulatory Flexibility Act. A final evaluation has been prepared for this action and it is contained in the Rules Docket. A copy of it may be obtained from the Rules Docket at the location provided under the caption **ADDRESSES**.

List of Subjects in 14 CFR Part 39

Air transportation, Aircraft, Aviation safety, Incorporation by reference, Safety.

Adoption of the Amendment

Accordingly, pursuant to the authority delegated to me by the Administrator, the Federal Aviation Administration amends part 39 of the Federal Aviation Regulations (14 CFR part 39) as follows:

PART 39—AIRWORTHINESS DIRECTIVES

1. The authority citation for part 39 continues to read as follows:

Authority: 49 U.S.C. 106(g), 40113, 44701.

§ 39.13 [Amended]

2. Section 39.13 is amended by adding the following new airworthiness directive:

2002–03–15 Dornier Luftfahrt GMBH: Amendment 39–12656. Docket 2001–NM–185–AD.

Applicability: Model 328–100 airplanes, serial numbers 3005 through 3119 inclusive, on which Dornier Service Bulletin SB–328–27–319, dated June 26, 2000, or Revision 1, dated September 27, 2000, has been accomplished; and Model 328–300 series airplanes, serial numbers 3105 through 3184 inclusive; certificated in any category.

Note 1: This AD applies to each airplane identified in the preceding applicability provision, regardless of whether it has been modified, altered, or repaired in the area subject to the requirements of this AD. For airplanes that have been modified, altered, or repaired so that the performance of the requirements of this AD is affected, the owner/operator must request approval for an alternative method of compliance in accordance with paragraph (d) of this AD. The request should include an assessment of the effect of the modification, alteration, or repair on the unsafe condition addressed by this AD; and, if the unsafe condition has not been eliminated, the request should include specific proposed actions to address it.

Compliance: Required as indicated, unless accomplished previously.

To prevent detachment of the aileron potentiometer lever, which could result in jamming of the elevator and/or aileron flight control systems and reduced controllability of the airplane, accomplish the following:

Testing and Corrective Action

(a) Within 30 days after the effective date of this AD, test the left- and right-hand potentiometer levers of the aileron flight control system to determine whether, with the bolt in position and the clamping force across the splines relaxed, the levers can be pulled off the splined shaft, in accordance with the Dornier service bulletin listed in paragraph (a)(1) or (a)(2) of this AD, as applicable.

(1) *For Dornier Model 328–100 series airplanes:* Accomplishment Instructions, ''Aileron System,'' of Dornier Service Bulletin SB–328–27–359, dated March 29, 2001.

(2) *For Dornier Model 328–300 series airplanes:* Accomplishment Instructions, ''Aileron System,'' of Dornier Service Bulletin SB–328J–27–064, Revision 1, dated April 12, 2001.

(b) If, as a result of the test required by paragraph (a) of this AD, any lever cannot be removed, before further flight, retighten the nut and bolt and replace the split pin, in accordance with the Dornier service bulletin listed in paragraph (a)(1) or (a)(2) of this AD, as applicable.

(c) If, as a result of the test required by paragraph (a) of this AD, any lever can be detached from the splined shaft, perform the actions specified in paragraph (c)(1) or (c)(2) of this AD, as applicable.

(1) If a potentiometer lever having either part number (P/N) 001A271A2062 000 or

001A271A2062 002 is available from stock or from the airplane manufacturer, before further flight, replace the defective lever with a new lever having either P/N 001A271A2062 000 or 001A271A2062 002; in accordance with the Dornier service bulletin listed in paragraph (a)(1) or (a)(2) of this AD, as applicable. After the installation of the new lever and before further flight, test the new lever as required in paragraph (a) of this AD.

(2) If a potentiometer lever is not available from stock or from the airplane manufacturer, before further flight, reassemble the existing lever with loctite, in accordance with the Dornier service bulletin listed in paragraph (a)(1) or (a)(2) of this AD, as applicable and, within 4,000 flight hours or 24 months after the effective date of this AD, whichever comes first, replace the lever with a new lever having P/N 001A271A2062 000 or 001A271A2062 002; in accordance with a method specified in paragraph (c)(2)(i) or (c)(2)(ii) of this AD.

(i) In accordance with a method approved by either the Manager, International Branch, ANM–116, FAA; or the Luftfahrt-Bundesamt (LBA) (or its delegated agent).

(ii) In accordance with the Dornier service bulletin specified in paragraph (a)(1) or (a)(2) of this AD, as applicable.

Alternative Methods of Compliance

(d) An alternative method of compliance or adjustment of the compliance time that provides an acceptable level of safety may be used if approved by the Manager, International Branch, ANM–116. Operators shall submit their requests through an appropriate FAA Principal Maintenance Inspector, who may add comments and then send it to the Manager, International Branch, ANM–116.

Note 2: Information concerning the existence of approved alternative methods of compliance with this AD, if any, may be obtained from the International Branch, ANM–116.

Special Flight Permits

(e) Special flight permits may be issued in accordance with sections 21.197 and 21.199 of the Federal Aviation Regulations (14 CFR 21.197 and 21.199) to operate the airplane to a location where the requirements of this AD can be accomplished.

Incorporation by Reference

(f) Except as provided by paragraph (c)(2)(i) of this AD, the actions shall be done in accordance with Dornier Service Bulletin SB–328–27–359, dated March 29, 2001; or Dornier Service Bulletin SB–328J–27–064, Revision 1, dated April 12, 2001; as applicable. This incorporation by reference was approved by the Director of the Federal Register in accordance with 5 U.S.C. 552(a) and 1 CFR part 51. Copies may be obtained from **Fairchild Dornier, Dornier** Luftfahrt GmbH, P.O. Box 1103, D–82230 Wessling, Germany. Copies may be inspected at the FAA, Transport Airplane Directorate, 1601 Lind Avenue, SW., Renton, Washington; or at the Office of the Federal Register, 800 North Capitol Street, NW., suite 700, Washington, DC.

Note 3: The subject of this AD is addressed in German airworthiness directive 2001–167/2, dated June 28, 2001, and German airworthiness directive 2001–168, dated June 14, 2001.

Effective Date

(g) This amendment becomes effective on March 27, 2002.

Issued in Renton, Washington, on February 8, 2002.

Ali Bahrami,

Acting Manager, Transport Airplane Directorate, Aircraft Certification Service.

[FR Doc. 02–3612 Filed 2–19–02; 8:45 am]

BILLING CODE 4910–13–P

DEPARTMENT OF TRANSPORTATION

Federal Aviation Administration

14 CFR Part 39

[Docket No. 2000–NE–14–AD; Amendment 39–12650; AD 2002–03–09]

RIN 2120–AA64

Airworthiness Directives; Honeywell International Inc. (Formerly AlliedSignal Inc. and Textron Lycoming) LTS101 Series Turboshaft and LTP101 Series Turboprop Engines

AGENCY: Federal Aviation Administration, DOT.

ACTION: Final rule.

SUMMARY: This amendment adopts a new airworthiness directive (AD), that is applicable to Honeywell International Inc. (formerly AlliedSignal Inc. and Textron Lycoming) LTS101 series turboshaft and LTP101 series turboprop engines. This amendment requires a one-time visual inspection for surface finish and a one-time fluorescent penetrant inspection for cracks of certain impellers installed on LTS101 series turboshaft and LTP101 series turboprop engines. This amendment is prompted by a report of a machining discrepancy that may have occurred during manufacture of the affected impellers. The actions specified by this AD are intended to prevent impeller failure from cracks in the impeller back face area, which could result in an uncontained engine failure.

DATES: Effective date March 27, 2002.

The incorporation by reference of certain publications listed in the regulations is approved by the Director of the Federal Register as of March 27, 2002.

ADDRESSES: The service information referenced in this AD may be obtained from Honeywell International Inc. Aerospace Services Attn.: Data Distribution, M/S 64–3/2101–201, PO Box 29003, Phoenix, AZ 85038–9003; telephone (602) 365–2493, fax (602) 365–5577. This information may be examined, by appointment, at the Federal Aviation Administration (FAA), New England Region, Office of the Regional Counsel, 12 New England Executive Park, Burlington, MA; or at the Office of the Federal Register, 800 North Capitol Street, NW., suite 700, Washington, DC.

FOR FURTHER INFORMATION CONTACT: Robert Baitoo, Aerospace Engineer, Los Angeles Aircraft Certification Office, FAA, Transport Airplane Directorate, 3960 Paramount Blvd., Lakewood, CA 90712–4137; telephone (562) 627–5245, fax (562) 627–5210.

SUPPLEMENTARY INFORMATION: A proposal to amend part 39 of the Federal Aviation Regulations (14 CFR part 39) to include an AD that is applicable to Honeywell International Inc. (formerly AlliedSignal Inc. and Textron Lycoming) LTS101 series turboshaft and LTP101 series turboprop engines was published in the **Federal Register** on October 29, 2001 (66 FR 54463). That action proposed to require a one-time visual inspection for surface finish and a one-time fluorescent penetrant inspection for cracks of certain impellers installed on LTS101 series turboshaft and LTP101 series turboprop engines in accordance with AlliedSignal Service Bulletin (SB) LT 101–72–30–0186, dated October 1, 1999, or Honeywell International Inc. SB LT 101–72–30–0186, Revision 1, dated April 25, 2000.

Comments

Interested persons have been afforded an opportunity to participate in the making of this amendment. No comments were received on the proposal or the FAA's determination of the cost to the public. The FAA has determined that air safety and the public interest require the adoption of the rule as proposed.

Economic Analysis

The FAA estimates that 600 engines installed on aircraft of U.S. registry would be affected by this AD and that it would take approximately 4 work hours per engine to accomplish the inspection. The average labor rate is $60 per work hour. There are no required parts costs. Based on these figures, the total cost effect of this AD on U.S. operators is estimated to be $144,000.

Regulatory Analysis

This final rule does not have federalism implications, as defined in Executive Order 13132, because it would not have a substantial direct

effect on the States, on the relationship between the national government and the States, or on the distribution of power and responsibilities among the various levels of government. Accordingly, the FAA has not consulted with state authorities prior to publication of this final rule.

For the reasons discussed above, I certify that this action (1) is not a ''significant regulatory action'' under Executive Order 12866; (2) is not a ''significant rule'' under the DOT Regulatory Policies and Procedures (44 FR 11034, February 26, 1979); and (3) if promulgated, will not have a significant economic impact, positive or negative, on a substantial number of small entities under the criteria of the Regulatory Flexibility Act. A final evaluation has been prepared for this action and it is contained in the Rules Docket. A copy of it may be obtained by contacting the Rules Docket at the location provided under the caption **ADDRESSES**.

List of Subjects in 14 CFR Part 39

Air transportation, Aircraft, Aviation safety, Incorporation by reference, Safety.

Adoption of the Amendment

Accordingly, pursuant to the authority delegated to me by the Administrator, the Federal Aviation Administration amends part 39 of the Federal Aviation Regulations (14 CFR part 39) as follows:

PART 39—AIRWORTHINESS DIRECTIVES

1. The authority citation for part 39 continues to read as follows:

Authority: 49 U.S.C. 106(g), 40113, 44701.

§ 39.13 [Amended]

2. Section 39.13 is amended by adding a new airworthiness directive to read as follows:

2002–03–09 Honeywell International Inc.: Amendment 39–12650. Docket No. 2000–NE–14–AD.

Applicability

This airworthiness directive (AD) is applicable to Honeywell International Inc. (formerly AlliedSignal Inc. and Textron Lycoming) LTS101 series turboshaft and LTP101 series turboprop engines with the following centrifugal compressor impeller part numbers (P/N's) installed: 4–101–052–57 and 4–101–052–62, except those with a P/N or serial number (SN) listed in paragraphs 1.A.(1) through 1.A.(3) of AlliedSignal Service Bulletin (SB) LT 101–72–30–0186, dated October 1, 1999, or Honeywell International Inc. SB LT 101–72–30–0186, Revision 1, dated April 25, 2000. These engines are installed on, but not limited to Aerospatiale AS350, Eurocopter MBB–BK117 and HH–65A, Bell 222, Page Thrush, Air Tractor AT–302, Piaggio P.166–DL3, Riley International R421, and Pacific Aero 08–600 aircraft.

Note 1: This AD applies to each engine identified in the preceding applicability provision, regardless of whether it has been modified, altered, or repaired in the area subject to the requirements of this AD. For engines that have been modified, altered, or repaired so that the performance of the requirements of this AD is affected, the owner/operator must request approval for an alternative method of compliance in accordance with paragraph (d) of this AD. The request should include an assessment of the effect of the modification, alteration, or repair on the unsafe condition addressed by this AD; and, if the unsafe condition has not been eliminated, the request should include specific proposed actions to address it.

Compliance

Compliance with this AD is required as indicated, unless already done.

To prevent impeller failure from cracks in the impeller back face area, which could result in an uncontained engine failure, do the following:

(a) Within 900 gas generator (Ng) cycles after the effective date of this AD, conduct a one-time visual inspection for surface finish and fluorescent penetrant inspection of impellers P/N 4–101–052–57 and 4–101–052–62 for cracks in accordance with paragraphs 3.A through 3.F. of the Accomplishment Instructions of AlliedSignal SB LT 101–72–30–0186, dated October 1, 1999, or Honeywell International Inc. SB LT 101–72–30–0186, Revision 1, dated April 25, 2000.

(b) Replace all impellers that exceed the acceptable limits of the Accomplishment Instructions of AlliedSignal Service Bulletin (SB) LT 101–72–30–0186, dated October 1, 1999, or Honeywell International Inc. SB LT 101–72–30–0186, Revision 1, dated April 25, 2000, with a serviceable impeller.

(c) After the effective date of this AD, do not install impeller P/N's 4–101–052–57 or 4–101–052–62, except those with an impeller P/N or SN listed in paragraphs 1. A.(1) through 1. A.(3) of AlliedSignal SB LT 101–72–30–0186, dated October 1, 1999, or Honeywell International Inc. SB LT 101–72–30–0186, Revision 1, dated April 25, 2000.

Alternative Methods of Compliance

(d) An alternative method of compliance or adjustment of the compliance time that provides an acceptable level of safety may be used if approved by the Manager, Los Angles Aircraft Certification Office (LAACO). Operators must submit their request through an appropriate FAA Principal Maintenance Inspector, who may add comments and then send it to the Manager, LAACO.

Note 2: Information concerning the existence of approved alternative methods of compliance with this airworthiness directive, if any, may be obtained from the LAACO.

Special Flight Permits

(e) Special flight permits may be issued in accordance §§ 21.197 and 21.199 of the Federal Aviation Regulations (14 CFR 21.197 and 21.199) to operate the aircraft to a location where the requirements of this AD can be done.

Documents That Have Been Incorporated by Reference

(f) The inspections must be done in accordance with the following SB's:

Document No.	Pages	Revision	Date
AlliedSignal SB LT 101–72–30–0186	All	Original	Oct. 1, 1999.
Total pages: 7			
Honeywell International Inc. SB LT 101–72–30–0186	1	Original	Oct. 1, 1999.
	2	1	Apr. 25, 2000.
	3–6	Original	Oct. 1, 1999.
	7	1	Apr. 25, 2000.
Total pages: 7			

This incorporation by reference was approved by the Director of the Federal Register in accordance with 5 U.S.C. 552(a) and 1 CFR part 51. Copies may be obtained from Honeywell International Inc. Aerospace Services Attn.: Data Distribution, M/S 64–3/2101–201, PO Box 29003, Phoenix, AZ 85038–9003; telephone (602) 365–2493, fax (602) 365–5577. Copies may be inspected, by appointment, at the FAA, New England Region, Office of the Regional Counsel, 12 New England Executive Park, Burlington, MA; or at the Office of the Federal Register, 800 North Capitol Street, NW, suite 700, Washington, DC.

Effective Date

(g) This amendment becomes effective on March 27, 2002.

Issued in Burlington, Massachusetts, on February 5, 2002.

Jay J. Pardee,

Manager, Engine and Propeller Directorate, Aircraft Certification Service.

[FR Doc. 02–3578 Filed 2–19–02; 8:45 am]

BILLING CODE 4910–13–P

DEPARTMENT OF COMMERCE

National Oceanic and Atmospheric Administration

15 CFR Part 909

[Docket No. 011219305–1305–01]

RIN 0648–AP77

Regulations Relating to Disclosure of Information and Employee Testimony in Litigation; Removal of Obsolete Regulations

AGENCY: National Oceanic and Atmospheric Administration, Department of Commerce.

ACTION: Final rule.

SUMMARY: The National Oceanic and Atmospheric Administration (NOAA) issues this final rule to remove and reserve regulations concerning the policies and procedures relating to the disclosure of information and employee testimony in litigation not involving the United States. These regulations are removed because they have been superseded by other regulations. The intended effect is to ensure that NOAA policies and procedures are consistent and not redundant with other regulations of the Department of Commerce.

DATES: Effective February 20, 2002.

FOR FURTHER INFORMATION CONTACT: Glenn E. Tallia, NOAA Senior Counselor for Atmospheric and Space Services and Research (GCW), SSMC 3, Mail Stop 15861, 1315 East-West Highway, Silver Spring, MD 20910; (301) 713–1337.

SUPPLEMENTARY INFORMATION:

Background

NOAA issues this final rule to remove provisions from its internal conduct regulations, codified at 15 CFR part 909. This part contains policies and procedures regarding disclosure of information and employee testimony in litigation not involving the United States. This part is removed and reserved because it has been superseded by regulations on the same topic promulgated by the Department of Commerce, and codified at 15 CFR part 15, subpart B.

Classification

Executive Order 12866

This final rule has been determined to be not significant for purposes of E.O. 12866.

Administrative Procedure Act

Pursuant to 5 U.S.C. 553(b)(A), prior notice and an opportunity for public comment and not required for this rule of agency organization, management and procedures. Further, this rule of agency organization, management and procedures is not a substantive rule, and is therefore not subject to the 30-day delay in effective date requirement of 5 U.S.C. 553(d).

Regulatory Flexibility Act

As this rule is not subject to the requirement to provide prior notice and an opportunity for public comment pursuant to 5 U.S.C. 553, or any other law, it is not subject to the analytical requirements of the Regulatory Flexibility Act, 5 U.S.C. 601 *et seq.*

Paperwork Reduction Act

This rule does not contain or involve any information collection requirements that require the approval of the Office of Management and Budget pursuant to the Paperwork Reduction Act, 44 U.S.C. chapter 35.

List of Subjects in 15 CFR Part 909

Courts, Government employees.

Accordingly, for the reasons set forth in the preamble and under the authority contained in 5 U.S.C. 301; 15 U.S.C. 1501, 1512, 1513, 1515 and 1518; Reorganization Plan No. 5 of 1950; 3 CFR, 1949–1953 Comp., p. 1004; and 44 U.S.C. 3101; remove and reserve 15 CFR part 909.

Dated: February 14, 2002.

Craig R. O'Connor,

Acting General Counsel, NOAA.

[FR Doc. 02–4058 Filed 2–19–02; 8:45 am]

BILLING CODE 3510–12–M

DEPARTMENT OF TRANSPORTATION

Coast Guard

33 CFR Part 165

[COTP San Francisco Bay 01–012]

RIN 2115–AA97

Security Zones; San Francisco Bay, San Francisco, CA

AGENCY: Coast Guard, DOT.

ACTION: Temporary final rule.

SUMMARY: The Coast Guard is establishing moving and fixed security zones extending 100 yards around all cruise ships and tank ships that enter, are moored in, or depart from the San Francisco Bay and Delta ports, California. This security zone is needed for national security reasons to protect the public and ports from potential subversive acts. Entry into these security zones is prohibited, unless specifically authorized by the Captain of the Port San Francisco Bay, or his designated representative.

DATES: The regulation is effective from 11:59 p.m. PST on December 21, 2001 to 11:59 p.m. PDT on June 21, 2002.

ADDRESSES: Documents indicated in this preamble as being available in the docket are part of docket COTP San Francisco Bay 01–012 and are available for inspection or copying at Coast Guard Marine Safety Office San Francisco Bay, Coast Guard Island, Alameda, California, 94501, between 9 a.m. and 4 p.m., Monday through Friday, except Federal holidays.

FOR FURTHER INFORMATION CONTACT: Lieutenant Ross Sargent, U.S. Coast Guard Marine Safety Office San Francisco Bay, at (510) 437–3073.

SUPPLEMENTARY INFORMATION:

Regulatory Information

We did not publish a notice of proposed rulemaking (NPRM) for this regulation. Under 5 U.S.C. 553(b), the Coast Guard finds that good cause exists for not publishing an NPRM. On September 11, 2001, two commercial aircraft were hijacked and flown into the World Trade Center in New York, New York, inflicting catastrophic human casualties and property damage. A similar attack was inflicted upon the Pentagon in Arlington, Virginia, while a fourth commercial aircraft was hijacked and crashed in rural western Pennsylvania on the same day. National security and intelligence officials warn that future terrorist attacks against civilian targets may be anticipated. Due to the potential catastrophic impact of an attack on cruise ships and tank ships, this rulemaking is urgently required to prevent possible terrorist strikes against these vessels within San Francisco Bay and Delta ports. The delay inherent in the NPRM process is contrary to the public interest insofar as it would render cruise ships and tank ships in San Francisco and Delta ports vulnerable to subversive activity, sabotage and terrorist attack.

For the same reasons, under 5 U.S.C. 553(d)(3), the Coast Guard finds that good cause exists for making this rule effective less than 30 days after publication in the **Federal Register**.

Background and Purpose

Based on the September 11, 2001, terrorist hijackings and attacks on the World Trade Center in New York, the Pentagon in Arlington, Virginia, there is an increased risk that subversive activity could be launched by vessels or persons in close proximity to the San Francisco Bay and Delta ports, against cruise ships and tank ships entering, departing, or moored within the San Francisco Bay and Delta ports. The terrorist acts against the United States on September 11, 2001, have increased the need for safety and security measures on U.S. ports and waterways.

In response to these terrorist acts, and in order to prevent similar occurrences, the Coast Guard has established a security zone around cruise ships and tank ships to protect persons, transiting vessels, adjacent waterfront facilities, and the adjacent land of the San Francisco Bay and Delta ports. These security zones are necessary to prevent damage or injury to any vessel or waterfront facility, and to safeguard ports, harbors, or waters of the United States near the San Francisco Bay and Delta, California.

This zone will be enforced by the official patrol (Coast Guard commissioned, warrant or petty officers) onboard Coast Guard vessels and patrol craft. The official patrol may also be onboard patrol craft and resources of any government agency that has agreed to assist the Coast Guard in the performance of its duties. Persons and vessels are prohibited from entering into this security zone unless authorized by the Captain of the Port (COTP) or his designated representative. Each person and vessel in a security zone shall obey any direction or order of the COTP. The COTP may remove any person, vessel, article, or thing from a security zone. No person may board, or take or place any article or thing on board any vessel in a security zone without the permission of the COTP.

Pursuant to 33 U.S.C. 1232, any violation of the security zone described herein, is punishable by civil penalties (not to exceed $27,500 per violation, where each day of a continuing violation is a separate violation), criminal penalties (imprisonment for not more than 6 years and a fine of not more than $250,000), in rem liability against the offending vessel, and license sanctions. Any person who violates this regulation, using a dangerous weapon, or who engages in conduct that causes bodily injury or fear of imminent bodily injury to any officer authorized to enforce this regulation, also faces imprisonment up to 12 years (class C felony).

This security zone prohibits all vessels and people from approaching cruise ships and tank ships that are underway or moored in the San Francisco Bay and Delta ports. Specifically, no vessel or person may close to within 100 yards of a cruise ship or tank ship that is entering, moored, or departing the San Francisco Bay and Delta ports.

A security zone is automatically activated when a cruise ship or tank ship passes a line drawn between San Francisco Main Ship Channel buoys 7 and 8 (LLNR 4190 & 4195, positions 37°46.9′N, 122°35.4′W & 37°46.5′N, 122°35.2′W, respectively) while entering port and remains in effect while the vessel is moored within in the San Francisco Bay and Delta ports. When activated, this security zone will encompass a portion of the waterway described as a 100-yard radius around a cruise ship or tank ship in the San Francisco Bay and Delta ports. This security zone is automatically deactivated when the cruise ship or tank ship passes a line drawn between San Francisco Main Ship Channel buoys 7 and 8 (LLNR 4190 & 4195, positions 37°46.9′N, 122°35.4′W & 37°46.5′N, 122°35.2′W, respectively) on its departure from port. Vessels and people may be allowed to enter an established security zone on a case-by-case basis with authorization from the Captain of the Port.

Regulatory Evaluation

This rule is not a ''significant regulatory action'' under section 3(f) of Executive Order 12866, Regulatory Planning and Review, and does not require an assessment of potential costs and benefits under section 6(a)(3) of that Order. The Office of Management and Budget has not reviewed it under that Order. It is not ''significant'' under the regulatory policies and procedures of the Department of Transportation (DOT)(44 FR 11040, February 26, 1979).

The size of the zones are the minimum necessary to provide adequate protection for cruise ships and tank ships, their crews, other vessels and crews operating in the vicinity of cruise ships and tank ships, adjoining areas and the public. These zones will encompass a small portion of the waterway for a limited duration. Also, vessels and people may be allowed to enter the zones on a case-by-case basis with authorization from the Captain of the Port. Any hardships experienced by persons or vessels are considered minimal compared to the national interest in protecting cruise ships and tank ships, their crews and the public.

Small Entities

Under the Regulatory Flexibility Act (5 U.S.C. 601–612), we have considered whether this rule would have a significant economic impact on a substantial number of small entities. The term ''small entities'' comprises small businesses, not-for-profit organizations that are independently owned and operated and are not dominant in their fields, and governmental jurisdictions with populations of less than 50,000.

The Coast Guard certifies under 5 U.S.C. 605(b) that this rule will not have a significant economic impact on a substantial number of small entities. The security zones will not have a significant economic impact on a substantial number of small entities for several reasons: Small vessel traffic can pass safely around the area and vessels engaged in recreational activities, sightseeing and commercial fishing have ample space outside of the security zones to engage in these activities. When a cruise ship or tank ship is at anchor, vessel traffic will have ample room to maneuver around the security zones. Small entities and the maritime public will be advised of these security zones via public notice to mariners.

Assistance for Small Entities

Under section 213(a) of the Small Business Regulatory Enforcement Fairness Act of 1996 (Public Law 104–121), we offer to assist small entities in understanding the rule so that they could better evaluate its effects on them and participate in the rulemaking process. If the rule will affect your small business, organization, or government jurisdiction and you have questions concerning its provisions or options for compliance, please contact the person listed under **FOR FURTHER INFORMATION CONTACT** for assistance in understanding this rule.

Small businesses may send comments on the actions of Federal employees who enforce, or otherwise determine compliance with, Federal regulations to the Small Business and Agriculture Regulatory Enforcement Ombudsman and the Regional Small Business Regulatory Fairness Boards. The Ombudsman evaluates these actions annually and rates each agency's responsiveness to small business. If you wish to comment on actions by employees of the Coast Guard, call 1–888–REG–FAIR (1–888–734–3247).

Collection of Information

This rule calls for no new collection of information under the Paperwork Reduction Act of 1995 (44 U.S.C. 3501–3520).

Federalism

A rule has implications for federalism under Executive Order 13132, Federalism, if it has a substantial direct effect on State or local governments and would either preempt State law or impose a substantial direct cost of compliance on them. We have analyzed this rule under that Order and have determined that it does not have implications for federalism.

Unfunded Mandates Reform Act

The Unfunded Mandates Reform Act of 1995 (2 U.S.C. 1531–1538) requires Federal agencies to assess the effects of their discretionary regulatory actions. In particular, the Act addresses actions that may result in the expenditure by a State, local, or tribal government, in the aggregate, or by the private sector of $100,000,000 or more in any one year. Though this rule will not result in such an expenditure, we do discuss the effects of this rule elsewhere in this preamble.

Taking of Private Property

This rule will not effect a taking of private property or otherwise have taking implications under Executive Order 12630, Governmental Actions and Interference with Constitutionally Protected Property Rights.

Civil Justice Reform

This rule meets applicable standards in sections 3(a) and 3(b)(2) of Executive Order 12988, Civil Justice Reform, to minimize litigation, eliminate ambiguity, and reduce burden.

Protection of Children

We have analyzed this rule under Executive Order 13045, Protection of Children from Environmental Health Risks and Safety Risks. This rule is not an economically significant rule and does not create an environmental risk to health or risk to safety that may disproportionately affect children.

Indian Tribal Governments

This rule does not have tribal implications under Executive Order 13175, Consultation and Coordination with Indian Tribal Governments, because it does not have a substantial direct effect on one or more Indian tribes, on the relationship between the Federal Government and Indian tribes, or on the distribution of power and responsibilities between the Federal Government and Indian tribes.

Energy Effects

We have analyzed this rule under Executive Order 13211, Actions Concerning Regulations That Significantly Affect Energy Supply, Distribution, or Use. We have determined that it is not a ''significant energy action'' under that order because it is not a ''significant regulatory action'' under Executive Order 12866 and is not likely to have a significant adverse effect on the supply, distribution, or use of energy. It has not been designated by the Administrator of the Office of Information and Regulatory Affairs as a significant energy action. Therefore, it does not require a Statement of Energy Effects under Executive Order 13211.

Environment

We have considered the environmental impact of this rule and concluded that under figure 2–1, paragraph (34)(g), of Commandant Instruction M16475.lD, this rule is categorically excluded from further environmental documentation. A ''Categorical Exclusion Determination'' is available in the docket for inspection or copying where indicated under **ADDRESSES.**

List of Subjects in 33 CFR Part 165

Harbors, Marine safety, Navigation (water), Reports and record keeping requirements, Security measures, Waterways.

For the reasons discussed in the preamble, the Coast Guard amends 33 CFR part 165 as follows:

PART 165—REGULATED NAVIGATION AREAS AND LIMITED ACCESS AREAS

1. The authority citation for part 165 continues to read as follows:

Authority: 33 U.S.C. 1231; 50 U.S.C. 191, 33 CFR 1.05–1(g), 6.04–1, 6.04–6, 160.5; 49 CFR 1.46.

2. Add a new temporary § 165.T11–098 to read as follows:

§ 165.T11–098 Security Zones; San Francisco Bay and Delta ports.

(a) *Regulated area.* Temporary moving security zones are established as a 100-yard radius around all cruise ships and tank ships while entering or departing the San Francisco Bay and Delta ports. These moving security zones are activated when the cruise ship or tank ship passes a line drawn between San Francisco Main Ship Channel buoys 7 and 8 (LLNR 4190 & 4195, positions 37°46.9′N, 122°35.4′W & 37°46.5′N, 122°35.2′W, respectively) while entering the Port of San Francisco. Temporary fixed security zones are established as a 100 yard radius around all cruise ships and tank ships docked in the San Francisco Bay and Delta ports. This security zone is deactivated when the cruise ship or tank ship passes a line drawn between San Francisco Main Ship Channel buoys 7 and 8 (LLNR 4190 & 4195, positions 37°46.9′N, 122°35.4′W & 37°46.5′N, 122°35.2′W, respectively) on its departure from the Port of San Francisco.

(b) *Regulations.* (1) In accordance with the general regulations in § 165.33 of this part, the following rules apply to security zones established by this section:

(i) No person or vessel may enter or remain in a security zone without the permission of the Captain of the Port;

(ii) Each person and vessel in a security zone shall obey any direction or order of the Captain of the Port;

(iii) The Captain of the Port may take possession and control of any vessel in a security zone;

(iv) The Captain of the Port may remove any person, vessel, article, or thing from a security zone;

(v) No person may board, or take or place any article or thing on board, any vessel in a security zone without the permission of the Captain of the Port; and

(vi) No person may take or place any article or thing upon any waterfront facility in a security zone without the permission of the Captain of the Port.

(2) The Captain of the Port will notify the public via published notice to mariners.

(3) Nothing in this section shall be construed as relieving the owner or person in charge of any vessel from complying with the rules of the road and safe navigation practice.

(4) The regulations of this section will be enforced by the Captain of the Port San Francisco Bay, or his authorized representative.

(c) *Dates.* This section becomes effective at 11:59 p.m. PST on December 21, 2001, and will terminate at 11:59 p.m. PDT on June 21, 2002.

Dated: December 21, 2001.

P. V. Neffenger,

Commander, U.S. Coast Guard, Alternate Captain of the Port, San Francisco Bay, California.

[FR Doc. 02–4085 Filed 2–19–02; 8:45 am]

BILLING CODE 4910–15–U

ENVIRONMENTAL PROTECTION AGENCY

40 CFR Part 300

[FRL–7147–2]

National Oil and Hazardous Substances Pollution Contingency Plan; National Priorities List

AGENCY: Environmental Protection Agency.

ACTION: Direct final notice of partial deletion of the California Gulch Superfund Site from the National Priorities List.

SUMMARY: The Environmental Protection Agency (EPA) Region 8 is publishing a direct final notice of partial deletion of the subunits A and B, residential waste rock piles, and the parks and playgrounds within Operable Unit 9 (OU 9) of the California Gulch Superfund Site (Site), Lake County, Colorado from the National Priorities List (NPL).

The NPL, promulgated pursuant to section 105 of the Comprehensive Environmental Response, Compensation and Liability Act (CERCLA) of 1980, as amended, is appendix B of 40 CFR part 300, which is the National Oil and Hazardous Substance Pollution Contingency Plan (NCP). This direct final partial deletion is being published by EPA with the concurrence of the State of Colorado, through the Colorado Department of Public Health and Environment, because EPA has determined that all appropriate response actions under CERCLA have been completed, and therefore further remedial action pursuant to CERCLA is not appropriate.

OU 9 includes the Residential Populated Areas. EPA issued a Record of Decision (ROD) for OU 9 on September 2, of 1999. The Remedial Investigation has shown that the taking of remedial measures is not appropriate for subunits A and B of the Residential Populated Areas. Proposal to partially delete subunits A and B of the Residential Populated Areas was made by the State of Colorado, through the Colorado Department of Public Health and Environment, on November 3, 2000.

The Removal Action for the residential waste rock piles within OU 9 was completed on December 22, 1999 and the Removal Action Completion Report was submitted to EPA in July 2001. The Remedial Action for the parks and playgrounds within OU9 was completed on September 27, 2000.

The Site has been divided into 12 Operable Units (OUs). This direct final partial deletion pertains only to the subunits A and B, residential waste rock piles, and parks and playgrounds within OU 9 of the Site. Response activities will continue at the remaining OUs. Furthermore, this partial deletion does not alter the status of the Site-wide Surface and Ground Water, OU 12, which is not proposed for deletion and remains on the NPL.

DATES: This direct final partial deletion action will be effective April 22, 2002 unless EPA receives adverse comments by March 22, 2002. If adverse comments are received, EPA will publish a timely withdrawal of the direct final partial deletion in the **Federal Register** informing the public that the partial deletion will not take effect.

ADDRESSES: Comments may be mailed to: Rebecca Thomas, Remedial Project Manager, Environmental Protection Agency, Region 8, Mail Code 8EPR–SR, 999 18th Street, Suite 300, Denver, CO 80202, *Thomas.Rebecca@epamail.epa.gov,* (303) 312–6552.

Information Repositories: Comprehensive information about the California Gulch Site is available for viewing and copying at the Site information repositories located at: U.S. EPA Region 8, Superfund Records Center, 999 18th Street, 5th Floor, Denver, CO 80202, (303) 312–6473.

Viewing hours: 8:00 A.M. to 4:30 P.M., Monday through Friday, excluding holidays. and Lake County Pubic Library, 1115 Harrison Avenue, Leadville, CO 80461, (719) 486–0569.

FOR FURTHER INFORMATION CONTACT: Rebecca Thomas, Remedial Project Manager, Environmental Protection Agency, Region 8, Mail Code 8EPR–SR, 999 18th Street, Suite 300, Denver, CO 80202, *Thomas.Rebecca@epamail.epa.gov,* (303) 312–6552.

SUPPLEMENTARY INFORMATION:

Table of Contents

I. Introduction
II. NPL Deletion Criteria
III. Deletion Procedures
IV. Basis for Partial Site Deletion
V. Partial Deletion Action

I. Introduction

EPA Region 8 is publishing this direct final notice of partial deletion of subunits A and B, residential waste rock piles, and the parks and playgrounds within OU 9, California Gulch Superfund Site from the NPL.

The EPA identifies sites that appear to present a significant risk to public health or the environment and maintains the NPL as the list of those sites. As described in the § 300.425(e)(3) of the NCP, sites partially deleted from the NPL remain eligible for remedial actions if conditions at a partially deleted site warrant such action.

Because EPA considers this action to be noncontroversial and routine, EPA is taking it without prior publication of a notice of intent to partially delete. This action will be effective April 22, 2002, unless EPA receives adverse comments by March 22, 2002 on this document. If adverse comments are received within the 30-day public comment period on this document, EPA will publish a timely withdrawal of this direct final partial deletion before the effective date of the partial deletion and the partial deletion will not take effect. EPA will, as appropriate, prepare a response to comments and continue with the deletion process on the basis of the notice of intent to partially delete and the comments already received. There will be no additional opportunity to comment.

Section II of this document explains the criteria for deleting sites from the NPL. Section III discusses procedures that EPA is using for this action. Section IV discusses the subunits A and B, residential waste rock piles, and the parks and playgrounds within OU 9, California Gulch Superfund Site and demonstrates how it meets the deletion criteria. Section V discusses EPA's action to partially delete the Site from the NPL unless adverse comments are received during the public comment period.

II. NPL Deletion Criteria

Section 300.425(e) of the NCP provides that releases may be partially deleted from the NPL where no further response is appropriate. In making a determination to partially delete a Site from the NPL, EPA shall consider, in consultation with the State, whether any of the following criteria have been met:

i. Responsible parties or other persons have implemented all appropriate response actions required;

ii. All appropriate Fund-financed (Hazardous Substance Superfund Response Trust Fund) response under CERCLA has been implemented, and no further response action by responsible parties is appropriate; or

iii. The remedial investigation has shown that the release poses no significant threat to public health or the environment and, therefore, the taking of remedial measures is not appropriate.

Even if a site is partially deleted from the NPL, where hazardous substances, pollutants, or contaminants remain at the partially deleted site above levels that allow for unlimited use and unrestricted exposure, CERCLA section

121(c), 42 U.S.C. 9621(c) requires that a subsequent review of the site be conducted at least every five years after the initiation of the remedial action at the partially deleted site to ensure that the action remains protective of public health and the environment. If new information becomes available which indicates a need for further action, EPA may initiate remedial actions. Whenever there is a significant release from a site partially deleted from the NPL, the partially deleted site may be restored to the NPL without application of the hazard ranking system.

III. Deletion Procedures

The following procedures apply to the partial deletion of the Site:

(1) The EPA consulted with the State of Colorado on the partial deletion of the Site from the NPL prior to developing this direct final notice of partial deletion.

(2) The State of Colorado concurred with partial deletion of the Site from the NPL.

(3) Concurrently with the publication of this direct final notice of partial deletion, a notice of the availability of the parallel notice of intent to partially delete was published today in the ''Proposed Rules'' section of the **Federal Register** and is being published in a major local newspaper of general circulation at or near the Site and is being distributed to appropriate federal, state, and local government officials and other interested parties; the newspaper notice announces the 30-day public comment period concerning the notice of intent to partially delete the Site from the NPL.

(4) The EPA placed copies of documents supporting the partial deletion in the Site information repositories identified above.

(5) If adverse comments are received within the 30-day public comment period on this document, EPA will publish a timely notice of withdrawal of this direct final notice of partial deletion before its effective date and will prepare a response to comments and continue with the deletion process on the basis of the notice of intent to partially delete and the comments already received.

Partial deletion of a site from the NPL does not itself create, alter, or revoke any individual's rights or obligations. Partial deletion of a site from the NPL does not in any way alter EPA's right to take enforcement actions, as appropriate. The NPL is designed primarily for informational purposes and to assist EPA management. Section 300.425(e)(3) of the NCP states that the partial deletion of a site from the NPL does not preclude eligibility for future response actions, should future conditions warrant such actions.

While EPA does not believe that any future response action within the subunits A and B, residential waste rock piles, and the parks and playgrounds within Operable Unit 9 will be needed, if future conditions warrant such action, the deleted areas will remain eligible for future response actions. Furthermore, this partial deletion does not alter the status of the Site-wide Surface and Ground Water, Operable Unit 12, of the California Gulch Superfund Site, which is not proposed for deletion and remains on the NPL.

IV. Basis for Partial Site Deletion

The following provides EPA's rationale for deleting the subunits A and B, residential waste rock piles, and parks and playgrounds within OU 9 of the California Gulch Site from the NPL:

Site Location

The California Gulch Superfund Site is located in Lake County, Colorado approximately 100 miles southwest of Denver. The Site is in a highly mineralized area of the Colorado Rocky Mountains covering 16½ square miles of a watershed that drains along California Gulch to the Arkansas River. The Site includes the City of Leadville, various parts of the Leadville Historic Mining District, and Stringtown. A section of the Arkansas River from the confluence of California Gulch to the confluence of Lake Fork Creek is also included.

Subunits A and B are located within the outlaying areas of Leadville zoned for residential use. The residential waste rock piles are located on the eastern side Leadville. The majority of the parks and playgrounds are located within Leadville. A map and site coordinates of the general location of subunits A and B and the residential waste rock piles are included in the docket at the information repositories listed above. The docket also includes a map of the parks and playgrounds.

Site History

The California Gulch Superfund Site was listed on the National Priorities List on September 8, 1983, 48 FR 40658 (1983). Mining, mineral processing, and smelting activities have occurred at the Site for more than 130 years. Mining in the District began in 1860, when placer gold was discovered in California Gulch. As the placer deposits were exhausted, underground workings became the principal method for removing gold, silver, lead, and zinc ore. As these mines were developed, waste rock was excavated along with the ore and placed near the mine entrances. Ore was crushed and separated into metallic concentrates at mills, with mill tailing generally slurried into tailing impoundments. The Site was placed on the NPL because of concerns about the impact of mine drainage on surface waters in California Gulch and the impact of heavy metals loading in the Arkansas River.

In order to expedite the clean up of the Site, EPA agreed, pursuant to the 1994 Consent Decree, to divide the Site into twelve Operable Units (OUs). With the exception of OU 12, the operable units pertain to distinct geographical areas corresponding to areas of responsibility for the identified responsible parties and/or to distinct sources of contamination. EPA has taken responsibility for operable units where either no responsible party could be identified, the United States was a responsible party, or cash-out settlements had been reached with the responsible parties.

Under the 1994 Consent Decree, OUs 2 through 11 were designated to deal with areas where the appropriate responsible party or the United States would conduct source remediation. OU 12, which covers the entire Site, was designated to address site-wide surface and groundwater. OU 12 will be addressed after completion of source remediation in OUs 2 through 11. The Consent Decree recognized that additional source remediation or other appropriate response actions related to surface or ground water could occur as part of OU 12 anywhere within the 16.5 square mile of the Site. As determined by the Remedial Investigation, taking of remedial measures is not appropriate for subunits A and B. Therefore, surface and groundwater within subunits A and B require no consideration for OU 12.

EPA is partially deleting the subunits A and B, residential waste rock piles, and parks and playgrounds within OU 9 because all appropriate CERCLA response actions have been completed in these areas as described in Section IV. Response actions are not complete at most of the other OUs at the Site. Those OUs will remain on the NPL are not the subject of this partial deletion. The OUs are as follows:

OU 1 Yak Tunnel/Water Treatment Plant
OU 2 Malta Gulch Tailing Impoundments and Lower Malta Gulch Fluvial Tailing
OU 3 D&RG Slag Piles and Railroad Yard/Easement
OU 4 Upper California Gulch
OU 5 Asarco Smelter Sites/Slag/Mill Site

OU 6 Starr Ditch/Stray Horse Gulch/Lower Evans Gulch/Penrose Mine Waste Pile
OU 7 Apache Tailing Impoundments
OU 8 Lower California Gulch
OU 9 Residential Populated Areas
OU 10 Oregon Gulch
OU 11 Arkansas River Valley Floodplain
OU 12 Site-wide Surface and Ground Water

Operable Unit 9 of the California Gulch Site contains the Residential Populated Areas. The area encompasses the City of Leadville, Stringtown, and outlying areas zoned for residential use. Pursuant to the 1994 Consent Decree, Asarco Incorporated is responsible for conducting all appropriate response actions at OU 9.

Cultural Resources

Leadville has been classified as a National Historic Landmark. The State Historic Preservation Officer (SHPO) and the Advisory Council on Historic Preservation (ACHP) are contacted prior to remedial activities within OU 9. Procedures outlined in the EPA/SHPO/ACHP Programmatic Agreement will be followed to safeguard cultural resources. As a part of the Lake County Community Health Program, structures built before 1950 will be assessed by SHPO. SHPO will then determine the property's contributions to the historic district prior to action. Cultural Resource Mitigation activities were performed for the Non-Time Critical Removal Action in accordance with the Final Mitigation Plan for Selected Mine Waste piles, Operable Unit 9, California Gulch Superfund Site, Lake County, Colorado (September 4, 1997).

Remedial Investigation and Feasibility Study (RI/FS)

A site-wide Phase I Remedial Investigation (Phase I RI), which primarily addressed surface and groundwater contamination, was issued in January 1987. As a result of the Phase I RI, EPA developed the first operable unit at the Site, the Yak Tunnel. This first operable unit was designed to address the largest single source of metallic loading.

The Phase I RI was followed by a number of additional site-wide studies, including the Tailing Disposal Area Remedial Investigation Report, Baseline Human Health Risk Assessment Part A, Part B, and Part C, Ecological Risk Assessment for Terrestrial Ecosystems, Baseline Aquatic Ecological Risk Assessment, Groundwater RI, Surface Water RI, Waste Rock RI, and Site-wide Screening Feasibility Study (FS). OU 9 specific studies were also conducted, including the Soil-Lead in Residential Populated Areas RI, Parks and Playgrounds Engineering Evaluation and Cost Analysis (EE/CA), Mine Waste Engineering Evaluation and Cost Analysis EE/CA, and the Final Residential Soil FS.

Studies have determined lead to be the primary contaminant of concern in OU 9. The Remedial Investigation, completed in May of 1994, identified soils as the primary exposure pathway to the residential population at the site. The Final Residential Soil Feasability Study, completed in November of 1998, evaluated the residential soils of properties, yards and open space areas where lead levels exceeded the trigger level of 3,500 ppm and presented seven remedial alternatives.

Response Actions

OU 9 Response Actions for Subunits A and B

Subunits A and B are located within the outlying areas zoned for residential use within OU 9. The Remedial Investigation and Terrestrial Risk Assessment have shown that taking of remedial measures is not appropriate for subunits A and B. Proposal to partially delete subunits A and B of the Residential Populated Areas was made by the State of Colorado through the Colorado Department of Public Health and Environment on November 3, 2000.

OU9 Response Actions for Residential Waste Rock Piles

A Mine Waste Engineering Evaluation and Cost Analysis was prepared in December 1995 to identify Removal Action alternatives for the mine waste piles within OU 9. Removal (Response) Actions for the mine waste piles were described in the Non-Time Critical Removal Action Memorandum signed August 15, 1996. Activities included removal of 14 residential waste rock piles with lead concentrations greater than 3,500 ppm. Pursuant to the Action Memorandum, Asarco conducted the removal action in 1997 and 1999. Residential waste rock piles with lead concentrations greater than 3,500 ppm lead were removed and placed at end use locations. Residential waste rock piles which fell below action trigger levels were left in place.

The four piles with the highest lead concentrations were removed in 1997 and the remaining ten piles were removed in 1999. During the 1997 removal action, four piles (Hibschle #14 and #15, Wolcott #19, Hope/Last Chip #109) were removed and placed within Operable Unit 6 (OU 6). Approximately 42,400 cubic yards of waste material were placed within the Hams Tailings Pile (OU 6), then compacted and capped with 30 inches of clean borrow soil.

During the 1999 removal action, the ten waste piles removed included:

#16 Coronado
#17 Coronado/Northern
#22 Gray Eagle/Bison
#24 Kent
#26 Pocahontas
#28 Starr
#108 Turbot
#110 Luzerne
#111 Ypsilanti
#140 Ypsilanti/Ypsilanti B

In addition, eight suspected mine shafts were identified for closure during construction. The method of closure selected for the shafts was a monolithic concrete plug. Confirmation sampling showed that removal had successfully lowered levels to below site clean up levels of 3,500 ppm lead. Thus, no long term monitoring is required. This removal action is consistent with the performance of the final remedial action for OU 9 and is considered as the final remedy for waste mine piles within OU 9.

OU 9 Response Actions for Parks and Playgrounds

A Parks and Playgrounds Engineering Evaluation and Cost Analysis (EE/CA) was prepared in November of 1994. Based on the finding that soils at all parks and playgrounds were below the trigger level of 3,500 ppm lead, EPA approved no further action for the areas addressed by the work plan.

Subsequent to the Parks and Playgrounds EE/CA, one additional playground area was identified in Leadville. A Soil Remediation Site Plan was developed under the direction of the Kids First Program, pursuant to the Record of Decision for Residential Soils. Testing revealed that soils exceeded the trigger level of 3,500 ppm lead, and remedial actions involved the removal of 231 cubic yards of soil. Existing playground equipment was also removed. The excavated area was then filled with top soil and revegetated. Soil confirmation samples indicated that the soil lead concentrations were below the established action levels of 3,500 ppm lead.

Five Year Review

Based on the successful completion of the Removal Action and the Remedial Action, there are no further response actions planned or scheduled for subunits A and B, residential waste rock piles, and the park and playgrounds within OU 9.

Because this decision results in hazardous substances remaining on site,

above health-based levels, five-year reviews of the previous response actions will be required pursuant to the NCP. These reviews will be conducted in conjunction with site-wide five-year reviews. The Second Five Year Review Report for California Gulch, signed in September of 2001, concluded that the remedy for OU 9 currently protects human health and the environment. The next five-year review at the California Gulch Site is scheduled for completion in September of 2006.

Community Involvement

The Draft Mine waste Engineering Evaluation and Cost Analysis (EE/CA) was issued for public comment. A public meeting was held on December 19, 1995 to discuss the Removal Action for the mine waste piles located within OU 9. The EPA notified the citizens of Leadville by the release of and acceptance of public comment concerning the Mine Waste EE/CA for OU 9.

In November of 1998, EPA issued a Proposed Plan describing the Agency's preferred alternative to address risks to residents from lead in soils and other sources within OU 9. A public meeting to discuss the Proposed Plan was held in Leadville on November 19, 1998. Public comment on the Proposed Plan was accepted from November 12, 1998 through December 14, 1998. EPA then issued a Record of Decision for OU 9 presenting the selected remedy for the Residential Populated Areas of OU 9, California Gulch Superfund Site.

The State of Colorado, through the Colorado Department of Health and Environment, submitted a proposal for the deletion of subunits A and B within OU 9 on November 3, 2000. The petition of partial deletion requested EPA proceed with preparation of the Notice of Intent for Partial Deletion (NOIPD).

Public Participation activities have been satisfied as required in CERCLA section 113(k), 42 U.S.C. 9613(k), and section117, 42 U.S.C. 9617. Documents in the deletion docket which EPA relied on for recommendation of the partial deletion from the NPL are available to the public in the information repositories.

V. Partial Deletion Action

The EPA, with concurrence of the State of Colorado, has determined that all appropriate responses under CERCLA have been completed, and that no further response actions, under CERCLA, other than five-year reviews, are necessary. Therefore, EPA is deleting subunits A and B, residential waste rock piles, and the parks and playgrounds within OU 9, California Gulch Superfund Site from the NPL.

Because EPA considers this action to be noncontroversial and routine, EPA is taking it without prior publication. This action will be effective April 22, 2002 unless EPA receives adverse comments by March 22, 2002. If adverse comments are received within the 30-day public comment period, EPA will publish a timely withdrawal of this direct final notice of partial deletion before the effective date of the deletion and it will not take effect and, EPA will prepare a response to comments and continue with the deletion process on the basis of the notice of intent to partially delete and the comments already received. There will be no additional opportunity to comment.

List of Subjects in 40 CFR Part 300

Environmental protection, Air pollution control, Chemicals, Hazardous waste, Hazardous substances, Intergovernmental relations, Penalties, Reporting and recordkeeping requirements, Superfund, Water pollution control, Water supply.

Dated: January 30, 2002.

Jack W. McGraw,

Acting Regional Administrator, Region 8.

For the reasons set out in this document, 40 CFR part 300 is amended as follows:

PART 300—[AMENDED]

1. The authority citation for part 300 continues to read as follows:

Authority: 33 U.S.C. 1321(c)(2); 42 U.S.C. 9601–9657; E.O. 12777, 56 FR 54757, 3 CFR, 1991 Comp., p. 351; E.O. 12580, 52 FR 2923, 3 CFR, 1987 Comp., p. 193.

Appendix B—[Amended]

2. Table 1 of appendix B to part 300 is amended by revising the entry under Colorado for ''California Gulch'' to read as follows:

TABLE 1.—GENERAL SUPERFUND SECTION

State	Site name	City/county	Notes [1]
* * * * * * *			
CO	California Gulch	Leadville	P
* * * * * * *			

[1] * * *
P=Sites with partial deletion(s).

* * * * *

[FR Doc. 02–3919 Filed 2–19–02; 8:45 am]

BILLING CODE 6560–50–P

NATIONAL AERONAUTICS AND SPACE ADMINISTRATION

48 CFR Parts 1816 and 1852

RIN 2700–AC33

Major Breach of Safety or Security

AGENCY: National Aeronautics and Space Administration (NASA).

ACTION: Final rule.

SUMMARY: This final rule amends the NASA FAR Supplement (NFS) by revising the Major Breach of Safety or Security clause to more clearly state that a major breach of security is an act or omission by the contractor that results in various outcomes (compromise of classified information; illegal technology transfer, etc.); to clarify that two of the outcomes are equipment or property damage from vandalism greater than $250,000, or theft greater than $250,000; and to correctly identify the Occupational Safety and Health Administration (OSHA). In addition, the guidance for award fee evaluation factors is revised to be consistent with the Major Breach of Safety or Security clause.

EFFECTIVE DATE: February 20, 2002.

FOR FURTHER INFORMATION CONTACT: Jeff Cullen, NASA Headquarters Office of Procurement, Contract Management Division (Code HK), Washington, DC 20546; 202–358–1784; e-mail: *jcullen@hq.nasa.gov.*

SUPPLEMENTARY INFORMATION:

A. Background

This final rule revises 1852.223–75, Major Breach of Safety or Security. The current major breach of security description contained in paragraph (b) of the clause includes outcomes that

may result in a major breach of security. However, the description does not clearly state that to be a major breach of security, the outcomes must result from an act or omission by the contractor. Revising the clause to clearly state that a major breach of security is an act or omission by the contractor that results in the various outcomes (compromise of classified information, illegal technology transfer, etc.) would make the major breach of security paragraph consistent with paragraph (a) (major breach of safety) of the clause.

Additionally, the clause states that a major breach of security may arise from damage or loss greater than $250,000 to the Government, but it is not clear if this outcome is a standalone provision or if it applies to other outcomes in the clause (e.g., does a major breach occur if illegal technology transfer or theft occurs, and the result is damage or loss greater than $250,000 to the Government). This revision will remove the reference to damage or loss greater than $250,000 to the Government, but also clarify that two of the outcomes are equipment or property damage from vandalism greater than $250,000, or theft greater than $250,000.

Also, the definition of major breach of safety or security in 1816.405–274, Award Fee Evaluation Factors, will be revised to make it consistent with the revised 1852.223–75, Major Breach of Safety or Security definition.

Lastly, OSHA is corrected to read as the Occupational Safety and Health Administration in 1852.223–75, Major Breach of Safety or Security clause and in 1816.405–274, Award Fee Evaluation Factors.

B. Regulatory Flexibility Act

This final rule does not constitute a significant revision within the meaning of FAR 1.501 and Public Law 98–577, and publication for public comment is not required. However, NASA will consider comments from small entities concerning the affected NFS Parts 1816 and 1852 in accordance with 5 U.S.C. 610.

C. Paperwork Reduction Act

The Paperwork Reduction Act does not apply because the changes to the NFS do not impose recordkeeping or information collection requirements, or collections of information from offerors, contractors, or members of the public which require the approval of the Office of Management and Budget under 44 U.S.C. 3501, *et seq.*

List of Subjects in 48 CFR Parts 1816 and 1852

Government procurement.

Tom Luedtke,

Assistant Administrator for Procurement.

Accordingly, 48 CFR parts 1816 and 1852 are amended as follows:

1. The authority citation for 48 CFR parts 1816 and 1852 continues to read as follows:

Authority: 42 U.S.C. 2473 (c)(1).

PART 1816—TYPES OF CONTRACTS

2. In section 1816.405–274, revise paragraphs (c)(2) and (c)(3) to read as follows:

1816.405–274 Award fee evaluation factors.

* * * * *

(c) * * *

(2) A major breach of safety must be related directly to the work on the contract. A major breach of safety is an act or omission of the Contractor that consists of an accident, incident, or exposure resulting in a fatality or mission failure; or in damage to equipment or property equal to or greater than $1 million; or in any ''willful'' or ''repeat'' violation cited by the Occupational Safety and Health Administration (OSHA) or by a state agency operating under an OSHA approved plan.

(3) A major breach of security may occur on or off Government installations, but must be directly related to the work on the contract. A major breach of security is an act or omission by the contractor that results in compromise of classified information, illegal technology transfer, workplace violence resulting in criminal conviction, sabotage, compromise or denial of information technology services, equipment or property damage from vandalism greater than $250,000, or theft greater than $250,000.

* * * * *

PART 1852—SOLICITATION PROVISIONS AND CONTRACT CLAUSES

3. Section 1852.223–75 is amended by revising the clause date; deleting ''Occupational Health and Safety Administration'' and adding ''Occupational Safety and Health Administration'' in its place in the last sentence of paragraph (a); and revising paragraph (b) to read as follows:

1852.223–75 Major Breach of Safety or Security.

* * * * *

Major Breach of Safety or Security (February 2002)

* * * * *

(b) Security is the condition of safeguarding against espionage, sabotage, crime (including computer crime), or attack. A major breach of security may constitute a breach of contract that entitles the Government to exercise any of its rights and remedies applicable to material parts of this contract, including termination for default. A major breach of security may occur on or off Government installations, but must be related directly to the work on the contract. A major breach of security is an act or omission by the Contractor that results in compromise of classified information, illegal technology transfer, workplace violence resulting in criminal conviction, sabotage, compromise or denial of information technology services, equipment or property damage from vandalism greater than $250,000, or theft greater than $250,000.

* * * * *

[FR Doc. 02–4077 Filed 2–19–02; 8:45 am]

BILLING CODE 7510–01–P

NATIONAL AERONAUTICS AND SPACE ADMINISTRATION

48 CFR Part 1832

RIN 2700–AC33

Limitation on Incremental Funding and Deobligations

AGENCY: National Aeronautics and Space Administration.

ACTION: Final rule.

SUMMARY: This final rule amends the NASA FAR Supplement (NFS) to revise the criteria for incrementally funding contracts and establish dollar thresholds for incremental funding and deobligations under contracts. These changes will further limit the number of contracts eligible to be incrementally funded and the number of incremental funding and deobligation modifications.

EFFECTIVE DATE: February 20, 2002.

FOR FURTHER INFORMATION CONTACT: Ron Lentz, NASA Headquarters (Code HK), Washington, DC, (202) 358–0416, e-mail: *rlentz@hq.nasa.gov.*

SUPPLEMENTARY INFORMATION:

A. Background

Currently, NFS 1832.702–70 limits the incremental funding of cost-reimbursement and fixed-price contracts. In spite of these restrictions, numerous incremental funding modifications are being issued against

each of the above contracts. The high number of modifications creates a workload burden for budget and procurement personnel in the Agency. This final rule further restricts the number of cost-reimbursement contracts that can be incrementally funded by revising the criteria that a contract must meet in order for it to be incrementally funded. A threshold of $500,000 or more is specified for R&D contracts under which no supplies are deliverable and a minimum contract period of performance of at least one year is specified. Furthermore, initial contract funding must be $100,000 or more. It also establishes a minimum dollar threshold of $25,000 that certain incremental funding and deobligation modifications must meet.

B. Regulatory Flexibility Act

NASA certifies that this final rule will not have a significant economic impact on a substantial number of small entities within the meaning of the Regulatory Flexibility Act, 5 U.S.C. 601 *et seq.* because the changes primarily affect internal procedures which will merely result in fewer, but larger dollar value, funding actions on contracts.

C. Paperwork Reduction Act

The Paperwork Reduction Act does not apply because this final rule does not impose any new record keeping or information collection requirements, or collection of information from offerors, contractors, or members of the public that require the approval of the Office of Management and Budget under 44 U.S.C. 3501, *et seq.*

List of Subjects in 48 CFR Part 1832

Government procurement.

Tom Luedtke,

Assistant Administrator for Procurement.

Accordingly, 48 CFR part 1832 is amended as follows:

1. The authority citation for 48 CFR Part 1832 continues to read as follows:

Authority: 42 U.S.C. 2473(c)(1).

PART 1832—CONTRACT FINANCING

2. Revise section 1832.702–70 to read as follows:

1832.702–70 NASA policy.

(a) Cost-reimbursement contracts may be incrementally funded only if all the following conditions are met:

(1) The total value of the contract (including options as defined in FAR Subpart 17.2) is—

(i) $500,000 or more for R&D contracts under which no supplies are deliverable; or

(ii) $1,000,000 or more for all other contracts.

(2) The period of performance exceeds one year.

(3) The funds are not available to fund the total contract value fully at award.

(4) Initial funding of the contract is $100,000 or more.

(b) Fixed-price contracts, other than those for research and development, shall not be incrementally funded.

(c)(1) Fixed-price contracts for research and development may be incrementally funded if the conditions of 1832.702–70(a)(1) through (4) are met and the initial funding of the contract is at least 50 percent of the total fixed price.

(2) Incrementally funded fixed-price contracts shall be fully funded as soon as adequate funding becomes available.

(d) Except for a modification issued to fully fund a contract, incremental funding modifications shall not be issued for amounts totaling less than $25,000.

(e) Except for a modification issued to close out a contract, modifications deobligating funds shall not be issued for amounts totaling less than $25,000.

(f) The procurement officer, with the concurrence of the installation Comptroller, may waive any of the conditions set forth in paragraphs 1832.702–70(a) through (e). The procurement officer shall maintain a record of all such approvals during the fiscal year.

(g) A class deviation from the conditions set forth in paragraphs 1832.702–70(a) through (e) exists to permit incremental funding of contracts under Phase II of the Small Business Innovation Research (SBIR) and Small Business Technology Transfer (STTR) programs. This deviation exists with the understanding that the contracts will be fully funded when funds become available.

[FR Doc. 02–4076 Filed 2–19–02; 8:45 am]

BILLING CODE 7510–01–P

Proposed Rules

Federal Register
Vol. 67, No. 34
Wednesday, February 20, 2002

This section of the FEDERAL REGISTER contains notices to the public of the proposed issuance of rules and regulations. The purpose of these notices is to give interested persons an opportunity to participate in the rule making prior to the adoption of the final rules.

DEPARTMENT OF HEALTH AND HUMAN SERVICES

Food and Drug Administration

21 CFR Part 872

[Docket No. 01N–0067]

Dental Devices: Classification of Encapsulated Amalgam Alloy and Dental Mercury and Reclassification of Dental Mercury; Issuance of Special Controls for Amalgam Alloy

AGENCY: Food and Drug Administration, HHS.

ACTION: Proposed rule.

SUMMARY: The Food and Drug Administration (FDA) is proposing three actions that will provide consistent regulation of dental mercury and dental amalgam products. FDA is proposing to issue a separate classification regulation for encapsulated amalgam alloy and dental mercury, a preamendments device, intended to be mixed in a single-use capsule to form filling material for the treatment of dental caries as class II (special controls); to amend the classification for amalgam alloy, a class II preamendments device, by adding special controls; and to reclassify from class I (general controls) to class II the preamendments device dental mercury intended for use as a component of amalgam alloy in the restoration of a dental cavity or broken tooth. These actions are being taken because the agency believes that there is sufficient information to establish special controls that will provide reasonable assurance of the safety and effectiveness of these devices. Elsewhere in this issue of the **Federal Register**, FDA is announcing the availability for comment of a draft guidance document that is proposed as a special control.

DATES: Submit written or electronic comments by May 21, 2002. See section XI of this document for the proposed effective date of a final rule based on this document.

ADDRESSES: Submit written comments to the Dockets Management Branch (HFA–305), Food and Drug Administration, 5630 Fishers Lane, rm. 1061, Rockville, MD 20057. Submit electronic comments to http://www.fda.gov/dockets/ecomments.

FOR FURTHER INFORMATION CONTACT: Susan Runner, Center for Devices and Radiological Health (HFZ–410), Food and Drug Administration, 9200 Corporate Blvd., Rockville, MD 20850, 301–827–5283.

SUPPLEMENTARY INFORMATION:

I. Highlights of the Proposed Regulation

In light of the information described below, FDA has reconsidered its regulatory approach to dental amalgam products. FDA is proposing to regulate amalgam products in a uniform manner, and apply class II special controls to these products to provide a reasonable assurance of safety and effectiveness. Specifically, FDA is proposing to:

1. Issue a separate classification regulation for encapsulated amalgam alloy and dental mercury. This product would be class II with special controls consisting of conformance to voluntary industry standard specifications in the following: (1) International Standards Organization ''(ISO) 1559:1995 Dental Materials–Alloys for Dental Amalgam,'' and (2) American National Standards Institute/American Dental Association (ANSI/ADA) ''Specification No. 6–1987 for Dental Mercury'' and FDA's guidance document entitled ''Special Control Guidance Document on Encapsulated Amalgam, Amalgam Alloy, and Dental Mercury Labeling.''

2. Reclassify dental mercury from class I to class II with special controls consisting of conformance to voluntary industry standard specifications in ANSI/ADA's ''Specification No. 6–1987 for Dental Mercury'' and FDA's guidance document entitled ''Special Control Guidance Document on Encapsulated Amalgam, Amalgam Alloy, and Dental Mercury Labeling.''

3. Amend the class II classification regulation of amalgam alloy to provide for special controls consisting of conformance to voluntary industry standard specifications in ''ISO 1559:1995 Dental Materials—Alloys for Dental Amalgam'' and FDA's guidance document entitled ''Special Control Guidance Document on Encapsulated Amalgam, Amalgam Alloy, and Dental Mercury Labeling.''

II. Background (Regulatory Authorities)

The Federal Food, Drug, and Cosmetic Act (the act) (21 U.S.C. 301 *et seq.*), as amended by the Medical Device Amendments of 1976 (the 1976 amendments) (Public Law 94–295), the Safe Medical Devices Act of 1990 (the SMDA) (Public Law 101–629), and the Food and Drug Administration Modernization Act of 1997 (Public Law 105–115) established a comprehensive system for the regulation of medical devices intended for human use. Section 513 of the act (21 U.S.C. 360c) established three categories (classes) of devices, depending on the regulatory controls needed to provide reasonable assurance of their safety and effectiveness. The three categories of devices are class I (general controls), class II (special controls), and class III (premarket approval).

Under the 1976 amendments, class II devices were defined as those devices for which there is insufficient information to show that general controls themselves will assure safety and effectiveness, but there is sufficient information to establish performance standards to provide such assurance. The SMDA broadened the definition of class II devices to mean those devices for which there is insufficient information to show that general controls themselves will assure safety and effectiveness, but there is sufficient information to establish special controls to provide such assurance. Special controls may include performance standards; postmarket surveillance; patient registries; and the development, and dissemination of guidelines, recommendations, and any other appropriate actions the agency deems necessary (section 513(a)(1)(B) of the act).

Under section 513 of the act, devices that were in commercial distribution before May 28, 1976 (the date of enactment of the amendments), generally referred to as preamendments devices, are classified after FDA has: (1) Received a recommendation from a device classification panel (an FDA advisory committee); (2) published the panel's recommendation for comment, along with a proposed regulation classifying the device; and (3) published a final regulation classifying the device.

FDA has classified most preamendments devices under these procedures.

Devices that were not in commercial distribution prior to May 28, 1976, generally referred to as postamendments devices, are classified automatically by statute (section 513(f) of the act) into class III without any FDA rulemaking process. Those devices remain in class III and require premarket approval, unless and until FDA issues an order finding the device to be substantially equivalent, under section 513(i) of the act, to a predicate device that does not require premarket approval. The agency determines whether new devices are substantially equivalent to previously marketed devices by means of premarket notification procedures in section 510(k) of the act (21 U.S.C. 360(k)) and part 807 of the regulations (21 CFR part 807).

A preamendments device that has been classified into class III may be marketed, by means of premarket notification procedures, without submission of a premarket approval application (PMA) until FDA issues a final regulation under section 515(b) of the act (21 U.S.C. 360e(b)) requiring premarket approval.

Reclassification of classified preamendments devices is governed by section 513(e) of the act. This section provides that FDA may, by rulemaking, reclassify a device (in a proceeding that parallels the initial classification proceeding) based upon ''new information.'' The reclassification can be initiated by FDA or by the petition of an interested person. The term ''new information,'' as used in section 513(e) of the act, includes information developed as a result of a reevaluation of the data before the agency when the device was originally classified, as well as information not presented, not available, or not developed at that time. (See, e.g., *Holland Rantos* v. *United States Department of Health, Education, and Welfare*, 587 F.2d 1173, 1174 n.1 (D.C. Cir. 1978); *Upjohn* v. *Finch*, 422 F.2d 944 (6th Cir. 1970); *Bell* v. *Goddard* 366 F.2d 177 (7th Cir. 1966). Reevaluation of the data previously before the agency is an appropriate basis for subsequent regulatory action where the reevaluation is made in light of changes in ''medical science.'' (See *Upjohn* v. *Finch*, supra, 422 F.2d at 951.) However, regardless of whether data before the agency are past or new data, the ''new information'' on which any reclassification is based is required to consist of ''valid scientific evidence,'' as defined in section 513(a)(3) of the act and § 860.7(c)(2) (21 CFR 860.7(c)(2)). FDA relies upon ''valid scientific evidence'' in the classification process to determine the level of regulation for devices. For the purpose of reclassification, the valid scientific evidence upon which the agency relies must be publicly available. Publicly available information excludes trade secret and/or confidential commercial information, e.g., the contents of a pending PMA. (See section 520(c) of the act (21 U.S.C.360j(c)).

III. Regulatory History of the Devices

Dental amalgam is a dental restorative material that is used as filling material in the treatment of dental caries. Dental amalgam is a mixture of approximately equal parts of elemental mercury (43 to 54 percent) and an amalgam alloy containing other metals, predominately silver, but also tin and copper, with smaller amounts of zinc, palladium, or indium sometimes present. The mercury and amalgam alloy components are mixed in the dentist's office to form dental amalgam. FDA has regulated dental mercury and amalgam alloy separately, with dental mercury § 872.3700 (21 CFR 872.3700) being regulated as a class I device and amalgam alloy § 872.3050 (21 CFR 872.3050) as a class II device.

In the **Federal Register** of December 30, 1980 (45 FR 85962), FDA published a proposed rule to classify dental mercury (§ 872.3700) into class II, based on the recommendation of the panel. Subsequently, in the **Federal Register** of August 12, 1987 (52 FR 30082 at 30089), FDA issued a final rule classifying dental mercury into class I instead of into class II, as proposed. FDA stated that it believed that, at that time, there was no valid scientific evidence of systematic poisoning to patients from amalgam containing mercury to justify classifying the device into class II (see 52 FR 30082 at 30089).

Although the agency acknowledged the risks presented by dental mercury (i.e., mercury poisoning and adverse tissue reaction), the agency believed that general controls, including labeling for the device bearing adequate directions for use and warnings under section 502 of the act (21 U.S.C. 352), would warn dentists about the rare risks of allergic reactions among patients and the risk of toxicity to dental health professionals. The agency concluded that the establishment of performance standards for these devices would not reduce these risks. Accordingly, FDA found that general controls alone were sufficient to provide reasonable assurance of the safety and effectiveness of the device. In the same issue of the **Federal Register**, FDA classified amalgam alloy into class II because of the potential risks to safety and effectiveness that could result from variations in chemical formulation related to percent composition and types of materials.

In the **Federal Register** of August 12, 1987 (52 FR 30082) and November 20, 1990 (55 FR 48436), FDA classified a total of 124 preamendments generic types of dental devices, including dental mercury (§ 872.3700) and amalgam alloy (§ 872.3050). Due to an inadvertent error, the preamendments device encapsulated amalgam alloy and dental mercury, was not separately classified. Encapsulated amalgam alloy and dental mercury is a device that consists of measured proportions of amalgam alloy and dental mercury, both separately sealed, but within the same single-use capsule, ready to be triturated to form an amalgam alloy filling material for use in the restoration of a dental cavity. Encapsulated amalgam alloy and dental mercury are now regulated as class II devices under the amalgam alloy classification (§ 872.3050).

IV. Scientific Review Related to Dental Mercury and Amalgam

A. Comprehensive Assessment of Dental Amalgam by the United States Public Health Service

In 1991 to 1992, under the auspices of the Committee to Coordinate Environmental Health and Related Programs (CCEHRP), the U.S. Public Health Service (PHS), a component of the Department of Health and Human Services (HHS), performed a comprehensive risk assessment of dental amalgam.

The PHS performed this comprehensive risk assessment because of heightened public concern about the safety of this product as a result of anecdotal reports of mercury toxicity from amalgam fillings and the alleviation of chronic disease conditions when the fillings were removed. These reports and the public's reaction to them prompted senior PHS officials to order a fresh look at all relevant data to determine if such safety concerns had any basis in fact. In 1993, a CCEHRP Subcommittee on Risk Management issued a report on its findings (Ref. 1) (hereinafter referred to as the PHS report).

In preparing this assessment, the CCEHRP relied upon a number of scientific review groups that included clinicians, scientists, and public health experts from the PHS, the Environmental Protection Agency, and the health care and academic sectors (Ref. 1). One group referred to as the Ad Hoc Subcommittee on the Benefits of

Dental Amalgam (hereinafter referred to as the Benefits Assessment Subcommittee), assessed the benefits of dental amalgam. A separate group, the Subcommittee on Risk Assessment (hereinafter referred to as the Risk Assessment Subcommittee), examined the potential health risks associated with dental amalgam restorations.

The Risk Assessment Subcommittee, comprised of 34 senior level experts from the fields of health promotion and disease prevention, dentistry, dental materials, toxicology, and biostatistics, reviewed the existing body of scientific literature (Ref. 1). It examined nearly 120 publications that reported the results of studies on levels of exposure to mercury and its salts. In conducting its review, the Risk Assessment Subcommittee paid close attention to the amount of mercury absorbed by study subjects and the consequences, if any, of lifetime exposure among people with dental amalgam restorations (Ref. 1).

The Risk Assessment Subcommittee found that historic experience with dental amalgams did not offer persuasive evidence of adverse health effects related to amalgam treatments other than a few reported cases of hypersensitivity (Ref. 1). In terms of evidence concerning adverse effects of low level, long-term mercury exposure, the Risk Assessment Subcommittee reviewed studies that reported neurological and psychological changes resulting from long-term, low-level mercury exposure. The Risk Assessment Subcommittee could not draw unambiguous conclusions or develop a risk assessment based on these endpoints because these studies were judged to have serious methodological flaws (Ref. 1).

Given the shortcomings of the occupational studies, the Risk Assessment Subcommittee also decided against using occupational exposure data as the basis for establishing an acceptable level of exposure to long-term, low-level mercury vapor: in other words, the Risk Assessment Subcommittee recommended against a ''no observed adverse effect level'' (Ref. 1).

Based on its review, the Risk Assessment Subcommittee arrived at four general conclusions:

1. In low-level occupational exposure, the subclinical effects detected have occurred in groups with mean tissue mercury levels that are only tenfold higher than those of the general population. However, the relationship between the observed effects and the tissue levels is unclear, as is the relationship between subclinical effects and a hazard to health.

2. Available data are not sufficient to indicate that health hazards can be identified in nonoccupationally exposed persons. Because there are no scientifically acceptable studies with sensitive, standardized measurements for physiological and behavioral changes in nonoccupationally exposed persons, it is not possible to determine whether those changes observed in persons with low-level occupational exposure to mercury might also occur as a result of exposure to mercury from dental amalgams. Adverse health consequences, however, cannot be totally dismissed.

3. The margin of safety may be lower in some individuals because of previously developed sensitivity to mercury or because body burdens of mercury are already high as a result of past exposure to other sources. It is possible, therefore, that some persons may respond adversely to the incremental exposure derived from dental amalgam restorations.

4. At the mercury doses produced by amalgam fillings, the evidence is not persuasive that the wide variety of nonspecific symptoms attributable to fillings and ''improvement'' after their removal are ascribable to mercury from the fillings. Conversely, the evidence is not persuasive that the potential for toxicity at the levels attributable to dental amalgams should be totally disregarded. The potential for effects at levels of exposure produced by dental amalgam restorations has not been fully explored (Ref. 1).

In addition to examining the risks of dental amalgam, a companion PHS subcommittee reviewed the benefits of this product (PHS report Ref. 1). It concluded that dental amalgam, which has been used successfully to treat millions of individuals for over 100 years, is an effective restorative material that offers many advantages over other materials. These advantages include wide potential applications, ease of manipulation, reasonable clinical serviceability, and relatively low cost. These findings, which are discussed in greater detail later in this document, were subjected to external review and found to be highly credible (Ref. 1).

On the basis of the assessment of available science on the risks and benefits of amalgam products, the PHS report recommended that FDA, the National Institute of Health, Centers for Disease Control and Prevention, Office of the Assistant Secretary for Health, and the National Institute of Dental Research implement a comprehensive strategy to address concerns about amalgam products. Specifically, the PHS report recommended the development of a research agenda, a method to monitor research, and a public and professional educational campaign. The PHS report also recommended that FDA carry out the following regulatory initiatives: (1) Combine elemental mercury and dental alloy, which are presently regulated separately, into a single product for regulatory purposes; (2) require manufacturers of all dental restorative materials, including dental amalgam, to label their products with the ingredients to help dentists identify patients who may exhibit allergic hypersensitivity to these substances; and (3) encourage dentists and patients to report to FDA adverse effects from all restorative materials. (Ref. 1).

The HHS Environmental Health Policy Committee, the successor to the CCEHRP, met in mid-1995 and reaffirmed the findings and policy approaches outlined in the 1993 PHS report (Ref. 2).

B. Citizen Petitions

In 1993, several individuals filed citizen petitions related to the regulation of dental amalgam and dental mercury (Ref. 3). These petitions requested that FDA take numerous actions with respect to dental amalgam and mercury, including banning dental mercury, reclassifying dental mercury into class III, imposing restrictions on amalgam, conducting environmental assessments and issuing environmental policy statements, issuing policy statements addressing patients and health care workers, and convening a special panel to review the merits of these requests.

The petitioners submitted numerous scientific publications they believed supported the conclusion that dental mercury and amalgam were unsafe. FDA convened a group of experts to assess these additional studies. After reviewing the additional studies cited in the petitions, the group of experts did not find that any of the studies supported claims that individuals with dental amalgam fillings will experience adverse effects including neurologic, renal, or developmental effects. Their conclusions concerning the risks of amalgam were consistent with the conclusions in the 1993 and 1995 PHS reports. (Ref. 4).

After review of the existing information about the safety of dental amalgam and mercury, including additional information cited by petitioners, FDA responded that it intended to propose to place amalgam products into class II, not class III. FDA

further responded that it did not intend to ban mercury or impose restrictions on the use of amalgam products by certain subpopulations (Ref. 5).

C. U.S. Government Research

The U.S. Government has funded several studies related to dental amalgam. Since 1982, a large-scale epidemiological study, commonly referred to as the ''Ranch Hand Study,'' has been continuing to assess the possible links between exposure of the U.S. military personnel to the herbicide Agent Orange, used during the Vietnam War, and reported health effects. The extensive medical and oral health database developed in support of this study, drawn from approximately 1,200 study participants, made it possible for persons with different research interests to use selected data in the pursuit of their own studies. Oral health information, dental records from military archives, and measures of mercury levels in blood and urine samples enabled the National Institute of Dental and Craniofacial Research to initiate a two-pronged study. One aspect of the study entailed the establishment of mercury levels from amalgam fillings and the occurrence of various reported health symptoms. The other aspect involved a longitudinal cohort assessment in which the number of amalgam restorations were determined retrospectively and comparisons made of reported health effects between groups with high and low exposure levels and those with no exposure. To date, no discernible causal or correlational connection has been observed between study subjects with amalgam fillings and adverse health effects. The period of observation is continuing. The government has sponsored several other continuing studies that relate to amalgam fillings with results anticipated in 2003.

D. International Reviews on Safety of Amalgam Fillings

There have been a number of major reviews by international authorities of the nature and magnitude of health risks associated with dental amalgam restorations. The majority of these assessments are based upon extensive reviews of the available body of relevant scientific literature and consensus among leading researchers and renowned experts from the fields of oral health, toxicology, medicine, and other related disciplines. The following overview identifies these individual reviews and provides the overall conclusions of each.

In 1994, an expert group convened by Sweden's National Board of Health and Welfare took the position that: ''Scrutiny of the results of recent research * * * has not shown that mercury from amalgam has an adverse effect on health, with the exception of isolated cases of allergic reactions'' (Ref. 6).

At the request of senior U.S. health officials, in 1994, a delegation of PHS scientists and regulators organized a nine-country information exchange forum in Berlin, Germany for the purpose of determining the scientific bases for national policies governing the use of dental amalgam. In 1998, a report memorializing the conclusions of this group was published. The report concluded that: (1) No systemic dose-dependent toxic effects have been shown to be related to amalgam; (2) local reactions to dental amalgam fillings do occur but are relatively rare; (3) the benefits of restoring teeth with dental amalgam outweigh significantly the documented risks; and (4) there is no indication that clinically satisfactory dental amalgam fillings should be removed (Ref. 7).

In 1995, Canadian health authorities released a report on amalgam safety (Ref. 8), which concluded:

> Dental amalgam contributes detectable amounts of mercury to the [human] body, and is the largest source of mercury exposure for average Canadians. However, this exposure is not causing illness in the general population. Current evidence does not indicate that mercury contributes to Alzheimer's disease, amyotrophic lateral sclerosis, multiple sclerosis or Parkinson's disease.

In 1996, the University of Otego's Wellington School of Medicine in New Zealand, which serves as the World Health Organization (WHO) Collaborating Centre in Oral Health, enlisted four prominent researchers to conduct a review of available scientific reports on amalgam safety. In a draft report, three of the researchers concluded: ''* * * the assumption of a cause-and-effect relationship between amalgam and cases of ill health is evidence of an overreaction and unwise, considering the endemic prevalence of amalgam in the population'' (Ref. 9).

In 1997, the Canadian province of Quebec undertook its own evaluation of the state of the science relating to amalgam safety. Taking a somewhat equivocal stance, Quebec authorities stated:

> The mainstream scientific view holds that mercury exposure, even at very low levels attributable to dental amalgam, might be affecting people adversely, but the evidence currently available is inadequate to determine if this is the case. Existing evidence is weak, but the information base is inadequate to conclude that dental amalgam has no effects that might be of concern (Ref. 10).

In early 1997, WHO convened a ''consultation meeting'' at its headquarters in Geneva, Switzerland to re-visit WHO's policy on dental amalgam use with the current science. In attendance were government officials, scientists, and representatives from the dental profession and dental trade industry from 10 of the world's major industrialized nations and 2 of WHO's regional offices. At the end of this meeting, the participants issued the following consensus statement:

> Dental amalgam restorations are considered safe, but components of amalgam and other dental restorative materials may, in rare instances, cause local side effects or allergic reactions. The small amount of mercury released from amalgam restorations, especially during placement and removal, has not been shown to cause any other adverse health effects. (Ref 11).

In 1997, the Oral Health section of WHO's Division of Non-Communicable Diseases issued a publication based upon the working papers and presentations by participants at the 1997 WHO conference noted above. The publication included and gave WHO sanction to the consensus statement adopted by the participants at the 1997 WHO consultation meeting and provided supporting technical and scientific evidence on a wide range of discrete issues relating to dental amalgam (Ref. 11).

For example, in a section entitled ''Direct Restorative Dental Materials in Oral Health Care Amalgam, Composites and Glass Ionomers,'' the document states:

> Expert groups, convened by the Swedish National Board of Health and Welfare and the Swedish Medical Research Council (SOS, 1987) and the Department of Health and Human Services, USA (1993), have studied possible health effects of the use of mercury-containing amalgam. These study groups concluded that while it is well documented that individuals with amalgam fillings have higher concentrations of mercury in all tissues studied than those who have no amalgam fillings, there is no direct evidence of an adverse effect of mercury from amalgam tooth fillings on general health (Ref. 11).

In the section titled ''Toxic and Allergenic Risks Due to Dental Biomaterials'', the document states:

> Mercury from dental amalgam has been accused of being a toxic agent causing serious consequences to health, including various sclerosis, Alzheimer's disease, myalgic encephalitis, epilepsy, etc. without any proof having ever been presented. On the other hand, we know that certain allergies to mercury are involved in the appearance of lichenoid reactions, even if they are not the only responsible cause. The very rare epidemiological estimation of risk of allergy gives us percentages that go from 0.04% to

0.00001%. In this respect, the present data concerning mercury are perfectly characteristic of the risks of chronic intoxication and of allergies caused by dental therapies, i.e., extremely low (Ref. 11).

A third paper presented in the WHO publication entitled ''Mercury Exposure From Dental Amalgam Fillings: Absorbed Dose and the Potential for Adverse Health Effects'' stated: ''It is concluded that no signs of renal toxicity could be found in conjunction with mercury released from amalgam fillings.'' Additionally, the paper recited the findings of a number of researchers who conducted studies on human subjects with symptoms allegedly caused by amalgam fillings. One study found that: ''No symptom group had a higher estimated daily uptake of inhaled mercury vapor, or any higher mercury concentrations in blood and urine than the control group.'' Another study reported:

> No significant differences regarding release of mercury vapor [sic] from the amalgam fillings before and after gum-chewing between the test subjects and the matched controls in a few spot measurements were found. Furthermore, no significant differences were found regarding urinary mercury levels and total excretion of proteins in urine. No damage in renal function was noted.

Yet another study cited in the WHO document found ''* * * no correlation between the total number of amalgam surfaces and fatigue, a symptom described as a mercury toxicity symptom'' (Ref. 11).

December 1998 marked the culmination of a 2-year long study by an ad hoc working group constituted by the European Commission (the Commission) on amalgam safety and regulatory policies among the Commission's 15 member states. Comprised of leading dental professionals, researchers, and academics from western Europe, and with oversight by the Commission's medical devices expert group, the ad hoc working group issued a comprehensive assessment containing a number of conclusions, as follows:

> In recent years, toxicological and biocompatibility aspects of dental amalgam have been reviewed extensively, both nationally and internationally, and risk analyses carried out. Currently available data indicate that mercury from dental amalgam will not cause an unacceptable health risk to the general population. * * * levels of mercury found in tissues, blood and urine and associated with dental amalgam fillings are considerably below the levels at which systemic dependent toxic effects have been shown to occur * * *. The hypothesis that there is a significant toxicological risk from dental amalgam fillings cannot be substantiated by the available evidence * * *. Local reactions to dental amalgam fillings and other dental restorative materials do occur but are relatively rare * * *. There is no scientific evidence that the use of dental amalgam is related to adverse effects on pre- and post-natal health or fertility.

Although there is not complete unanimity within the world community on either the potential health consequences arising from the use of dental amalgam or the appropriate posture that national health authorities should take with respect to regulating its use, there is overwhelming agreement among major health authorities that have assessed these risks that there is no evidence of a serious threat to the general population whose dental caries are treated with amalgam (Ref. 11).

Notwithstanding general international consensus about the level of risk, some Nordic countries, such as Denmark, Finland, Norway, and Sweden, have placed legal restrictions on dental amalgam for environmental concerns (Refs. 7 and 11). In addition, several European countries have taken very conservative approaches.

V. 1993 and 1994 Panel Meeting Concerning Encapsulated Amalgam Alloy and Dental Mercury

The Dental Products Panel (hereinafter referred to as the Panel) met on December 1, 2, and 3, 1993, and June 29, 1994, to discuss amalgam products. In addition to testimony from FDA staff, the Panel heard testimony from representatives of ADA, the American Dental Trade Association, and PHS. The Panel also reviewed the 1993 PHS report and an updated literature review. FDA requested that the Panel make a classification recommendation only on the encapsulated dental amalgam alloy and mercury.

After considering this testimony and information, the Panel unanimously recommended to classify encapsulated amalgam alloy and mercury for the restoration of teeth into class II. Specifically, the Panel recommended voluntary performance standards that could be issued by a group such as the Association for the Advancement of Medical Instrumentation (AAMI), voluntary testing guidelines, education, that the product be used only upon the written or oral authorization of a practitioner licensed by law to administer or use the device, and that the device be used only by persons with training or expertise in its use (Ref. 12).

A. Identification

The Panel identified encapsulated amalgam alloy and mercury as a device composed of elemental mercury and amalgam alloy separated by a septum, which when placed in a dental amalgamator produces dental amalgam that is intended for the restoration of teeth. This product is hereinafter referred to in this document as encapsulated alloy/mercury.

B. Classification Recommendation of Encapsulated Alloy/Mercury

Class II (special controls): The Panel recommended that the establishment of special controls be a medium priority.

C. Summary of the Reasons for the Panel's Recommendation for Encapsulated Alloy/Mercury

The Panel, after considering the persons for whom the generic device is intended, and the proposed conditions for use for the generic device, gave the following reasons in support of its recommendation to classify the encapsulated alloy/mercury into class II.

1. General controls by themselves are insufficient to provide a reasonable assurance of the safety and effectiveness of the device.
2. There is sufficient information to establish special controls to provide reasonable assurance of safety and effectiveness.
3. Special controls will provide a reasonable assurance of safety and effectiveness.

D. Summary of Data on Which the Panel's Recommendation Is Based

The Panel based its recommendation on the review of the PHS report, other published literature, on expert testimony presented to the Panel, and on the Panel member's personal knowledge of, and experience with, the devices. The PHS report has been summarized under section IV.A of this document.

The Panel also reviewed a wide range of literature during its deliberation on the classification of encapsulated alloy/mercury in addition to the data described in the PHS report. The majority of the literature reviewed states that there is no compelling reason to change the current usage patterns of dental amalgam. There is, however, acknowledgement that continued research in the area is prudent. The following paragraphs describe specific information detailing the literature.

One of the articles reviewed indicated that mercury vapor is released from amalgam restorations. This article stated that there is release of mercury vapor from restorations during chewing, tooth brushing, and other oral activities. The author, however, indicated that there is insufficient knowledge about the metabolism of mercury vapor in the human to predict the health significance

of chronic exposure to this source of mercury (Ref. 13).

Another article reviewed by the panel demonstrated that mercury vapor can be analyzed in the oral cavity, especially following removal of amalgams, and during the setting and polishing of the amalgam. This study also demonstrated a significant direct correlation between the size of the amalgam restoration and the amount of vapor released. The study, however, concludes that mercury vapor exposure is of short duration and infrequent and is well below the exposure limits that are considered harmful (Ref. 14).

Another article indicated that although there is evidence of mercury vapor released from amalgam restorations there is no proof of a causal link of this specific source of the heavy metal to any major human health problem (Ref. 15).

One article indicated that Dental Amalgam remains one of the most versatile restorative materials in use (Ref. 16). The article further stated that certain measures should be instituted to assure patient and health care professional safety. These include the potential for chemical sensitivity to any of the elements and compounds found in dental amalgam. Similar concerns were also raised in the PHS report. The article reported that the chemical sensitivity response to specific compounds and elements in a dental amalgam are no different than other sensitivity reactions (Ref. 16). It further stated that evidence suggests that sensitivities to chemicals can occur within a small portion of the population.

Several articles addressed the benefits versus the risks of dental amalgam, and these articles agreed that, although dental amalgam can release minute amounts of elemental mercury, occupational studies indicate that the severity of response to this heavy metal follows a dose response pattern (Refs. 16 and 17). A dose response effect has not been demonstrated at a level of exposure associated with dental amalgams (Refs. 16 and 18). It also is noted that mercury is absorbed from many sources, including food and air, and there has been no demonstration that most people experience any clinical effects from this small additional body burden of mercury from amalgams (Ref. 16). The articles also stated that if there are adverse health effects from mercury in dental amalgam they may be so subtle and nonspecific that they would be difficult to detect, and noted that true allergies to dental amalgam rarely have been reported but do exist (Refs. 16 and 19).

One article directly examined the claims of mercury poisoning from dental amalgam (Ref. 19). This article and others concluded that although it is not possible to completely rule out adverse effects in a minority of susceptible patients, there is insufficient evidence to justify claims that mercury from dental amalgam restorations has an adverse effect on health on the vast majority of patients (Refs. 16 and 19). Other articles indicated that, although mercury vapor in high concentrations can have deleterious effects on organ systems, there is no evidence of risk at the levels generated by chewing with amalgam restorations (Refs. 13 and 15). The regulatory issues related to amalgam were addressed in one article. This article emphasized the need for continued surveillance and the need for practitioner input to report problems in performance with dental devices (Ref. 20).

E. Risks to Health

The Panel stated that there were no major risks associated with encapsulated amalgam alloy/mercury when used as directed, but recognized there was a small population of patients that may demonstrate allergic reactions to the materials in amalgam. The Panel noted that improper usage of the product also presented risks associated with mercury toxicity. The Panel specifically identified improper storage, trituration, and handling as contributing to this risk.

VI. The Proposed Rule

FDA is proposing classification actions in this document for dental mercury and dental amalgam products. FDA believes that the uniform regulation of all these products as class II devices, and the application of certain uniform special controls is appropriate, given the same risks are presented by the potential toxicity of mercury in each of these devices. This approach is consistent with the recommendation in the PHS report to regulate these products in a uniform manner. FDA believes that sufficient information exists to develop special controls, which will provide reasonable assurance of the safety and effectiveness of these devices.

With respect to encapsulated alloy/mercury, FDA agrees with the Panel's recommendation and is proposing that this product be classified into class II (special controls). Specifically, FDA is following the Panel's recommendation and proposing that labeling guidance and relevant recognized voluntary consensus standards be applied as special controls to these products.

FDA is also proposing to reclassify dental mercury as identified in § 872.3700 from class I to class II with labeling guidance and a relevant recognized voluntary consensus standard as special controls.

Lastly, FDA is proposing to add labeling guidance and a relevant voluntary consensus standard as special controls for the existing class II device, amalgam alloy, as identified in § 872.3050. Currently, no performance standard or other special controls are designated for amalgam alloy.

A. Information FDA Reviewed Before Issuing This Proposal

Before making this proposal, FDA carefully examined extensive information about the safety and effectiveness of dental restorative materials that contain mercury. As stated previously, public concern about the safety of dental amalgam engendered several national and international comprehensive reviews of scientific information about the risks and benefits of these products. FDA examined the 1993 and 1995 PHS reports, information presented to the Panel and the Panel's recommendations, information submitted in support of citizen petition's requests, and numerous reports of international health organizations and foreign countries that conducted comprehensive risk assessments of dental products that contain mercury.

In preparing the 1993 and 1995 PHS reports described in section IV.A of this document, the experts convened by the PHS conducted a comprehensive review of the scientific literature to assess the benefits and risks posed by dental restorative materials containing mercury (Ref. 1). In assessing the benefits of these products, the Benefits Assessment Subcommittee performed a literature search using the Medline system (Ref.1). The scientific material reviewed for this report included well-qualified, prospective studies using objective assessment methods; cross-sectional studies reporting data for a given point or points in time; retrospective studies reporting the longevity of dental restorations; and articles published in peer-reviewed scientific journals (Ref. 1).

In assessing the risks associated with dental restorative materials containing mercury, the Risk Assessment Subcommittee viewed the body of significant literature that described the evidence for possible health effects produced from exposure to mercury from dental amalgam (Ref. l). The Risk Assesment Subcommittee reviewed an extensive number of studies relating to

possible risks presented by amalgam, including studies relating to: Mercury forms, intake, uptake, metabolism and excretion; human exposure to mercury from dental amalgam; factors affecting estimates of daily intake of mercury vapor from dental amalgam; intraoral mercury vapor production and estimation of daily intake; mercury levels in body fluid; human and animal uptake of mercury from dental amalgam; hazard identification; human exposure and response; occupational hazards presented by dental amalgam exposure; hypersensitivity; psychological outcomes associated with mercury levels in body fluids; and mercury residues in neurological patients (Ref. 1). The PHS updated its review of scientific literature on risks and benefits and issued a new report in 1995 that confirmed its initial findings (Ref. 2).

FDA also examined the information reviewed by its expert Panel in 1994, and the Panel's recommendation. In making its recommendation, the Panel reviewed the 1993 PHS report, testimony from several professional and health organizations, and additional scientific literature as described in section V.D of this document.

FDA also carefully examined numerous studies, as described in section IV.B of this document, submitted by petitioners as evidence that amalgam fillings cause detrimental physiological and psychological effects.

Lastly, FDA reviewed the comprehensive reports of several international health organizations and foreign countries on the risks associated with these products, described in section IV.D of this document. In preparing these reports, these countries and organizations conducted extensive reviews and assessments of existing literature and scientific information.

B. Weighing Benefits and Risks

For purposes of classification, FDA is to determine the safety and effectiveness of a device, in part, by weighing the probable benefits to health from use of the device against any probable risks of injury or illness from such use (section 513(a)(2) of the act).

1. Benefits

Over the past 100 years, amalgam fillings have provided great benefit by restoring the structure of teeth of millions of individuals. Products used to make amalgam fillings are used today in the following situations (Ref. 1):

- Individuals of all ages;
- Stress-bearing areas and in small to moderate sized cavities in the posterior teeth;
- Teeth with severe destruction of structure;
- For cast-metal, metal-ceramic, and ceramic restorations as a foundation;
- When a patient's commitment to oral hygiene is poor; and
- When moisture control is problematic with patients.

These products provide substantial benefits over other dental restorative materials because amalgam fillings offer a broad range of applicability in clinical situations, durability, ease of use and relative insensitivity to variations in handling technique and oral conditions (Ref. 1).

2. Risks

Dental amalgam can release minute amounts of elemental mercury, a metal whose toxicity at high exposure levels is well established. Estimates of human uptake of mercury from amalgam fillings have ranged between 1.24 and 27 micrograms (μg) per day, a factor of more than twentyfold. However, the widely varying experimental conditions and assumptions in calculations undoubtedly contribute to the wide range of results. Non-physiologic-based models resulted in estimates likely being several times too high. Recalculations correcting for these factors produced estimates of less than 5 μg per day. Studies have demonstrated higher blood and urine levels of mercury in individuals with amalgam fillings. However, estimates of mean daily mercury exposure from all sources vary (Ref. 1).

There is also evidence that mercury levels in body fluids spike during placement and removal of amalgam fillings and then decline over time, but no controlled clinical studies of health consequences of this phenomenon have been conducted. Occupational studies indicate that subclinical effects may occur at exposure levels tenfold higher than those typically experienced by the general population. Severity of response generally follows a dose-response pattern. There is no valid scientific evidence demonstrating specific adverse responses or a dose effect in humans at levels of mercury exposure associated with dental amalgam (Ref. 1).

Mercury is absorbed from many sources, including food and air. Because of the variability of exposures to mercury from all sources in the population, the margin of safety for some persons may be lowered when mercury from amalgam fillings is added. There is no valid scientific evidence that the general population treated with dental amalgam experiences any adverse clinical effects from this additional body burden of mercury arising from amalgam use (Ref. 1).

As stated previously, public concern has been expressed over the toxic effects of mercury from amalgam fillings and certain persons have attributed a variety of detrimental physiological and psychological effects to mercury toxicity from amalgam fillings. In response to these concerns, numerous national and international reviews have examined reports of adverse effects from amalgam fillings, and FDA has reviewed substantial information about amalgam risks, as described in sections IV and V of this document.

After review of the scientific evidence and review of numerous studies submitted in support of banning or upclassifying dental restorative products containing mercury, FDA does not find any persuasive evidence that the physiological and psychological symptoms attributed to amalgam fillings are caused by amalgam fillings. Furthermore, FDA does not find any persuasive evidence that there is any improvement of these symptoms after removal of amalgam fillings. Although there are studies purporting to support the view that amalgam products pose risks to persons beyond the small subpopulation of hypersensitive individuals, conclusions cannot be drawn from these studies because they are methodologically flawed.

This position concerning the evidence of risks posed by amalgam fillings is supported by the findings of the PHS reports (Ref. l), international health organizations, foreign governments, and the recommendations of FDA's expert advisory Panel as described in sections IV and V of this document. FDA does believe that there are some risks associated with dental products used in amalgam fillings from mercury toxicity that are associated with improper storage, trituration, and handling of the product. However, FDA does not believe that there are any major risks associated with toxicity of mercury when these products are used as directed. FDA believes there are also risks of allergic reaction to these products in a small subpopulation of individuals.

3. Benefits Versus Risks

FDA believes that valid scientific evidence, as defined in § 860.7(c)(2), exists to determine the safety and effectiveness of dental amalgam: Namely, certain studies described in the PHS report; the studies and reports upon which the Panel based its recommendation; studies and reports reviewed by international health organizations and foreign governments; and most notably the significant human

experience with amalgam for over 100 years.

Although the degree of risk is not known to a certainty, FDA must make an assessment to weigh the probable benefits with the probable risks associated with the use of the device, in accordance with the criteria for a reasonable assurance of safety under § 860.7(d)(1). The statute states that FDA's classification decisions are to be predicated on a ''reasonable assurance of safety and effectiveness,'' not an absolute assurance of safety and effectiveness (section 513(a)(1) of the act). Moreover, the statute directs FDA, in determining what is a ''reasonable assurance'' of safety and effectiveness, to assess ''probable risk,'' not absolute risk (section 513(a)(2) of the act). FDA believes that the benefits and risks of encapsulated alloy/mercury and amalgam alloy are sufficiently characterized to make a determination that these products should be classified into class II with special controls. FDA notes that there is more significant human experience with dental amalgam than any other restorative material, and that, accordingly, more is known about the risks of dental amalgam than any other restorative material (Ref. 1).

Given the known risks of untreated caries, the longstanding history of successful use of dental amalgam restorations, the benefits of products used in amalgam fillings over other alternative materials, and the overall lack of valid scientific evidence that persons whose carious teeth are treated with dental amalgam experience any adverse health effects, other than a very small number of people who are hypersensitive to mercury, FDA believes that the probable benefits of restorative dental products containing mercury outweigh the probable risks of using these products.

The agency acknowledges that a small subpopulation of persons that already have high body burdens of mercury or suffer from allergies may respond adversely to the additional mercury exposure from amalgam fillings. For these subpopulations, the agency believes the risks can be addressed by labeling and by using alternative filling materials.

FDA believes that special controls, such as those described below by the Panel, will address those risks presented by dental amalgam products, both to hypersensitive individuals and health care workers, and that class II with special controls will provide a reasonable assurance of the safety and effectiveness of dental amalgam products.

4. Proposed Special Controls to Address Risks Associated With the Use of Dental Restorative Materials Containing Mercury

FDA is proposing a labeling guidance and relevant recognized voluntary consensus standards as special controls for dental mercury and dental amalgam products. These special controls are consistent with the Panel's recommendations for special controls for encapsulated amalgam alloy and dental mercury, and FDA believes they address the risks related to toxicity associated with improper handling of dental mercury and dental amalgam products, and the risks for the small subpopulation of individuals who are allergic to ingredients in these products.

FDA's proposed guidance recommends that dental amalgam and dental mercury labeling lists all ingredients. By doing so, the clinician would be made aware of all materials he/she is placing in a patient's mouth, and would be able to avoid use of the product if the patient had known hypersensitivities to ingredients in amalgam products. This guidance also addresses risks to hypersensitive patients by recommending labeling instructing the practitioner not to use these products in hypersensitive persons, and of steps to take if allergic reactions do occur. FDA believes the guidance also controls the risks related to toxicity from improper storage, trituration, and handling by recommending instructions for storage, handling, and use. Finally, the guidance describes the prescription labeling requirements. FDA is including labeling aspects of the current edition of ''ISO 1559:1995'' and ANSI/ADA's ''Specification No. 6–1987,'' described below, into its labeling guidance.

The agency has adopted good guidance practices (GGPs) regulation, which set forth the agency's policies and procedures for the development, issuance, and use of guidance documents (21 CFR 10.115). Elsewhere in this issue of the **Federal Register**, FDA is announcing the availability of this draft guidance document for comment in accordance with GGPs.

FDA is also proposing ''ISO 1559:1995 Dental Materials—Alloys for Dental Amalgam'' as a special control for both encapsulated alloy/mercury and amalgam alloy. This standard was developed by international governmental and nongovernmental committees in liaison with ISO, a worldwide federation of national standards bodies. The standard describes appropriate specifications and test methods for alloys composed mainly of silver, tin, and copper used in amalgam. The alloy may be in either powder or tablet form, or in capsules with portions of alloy and mercury. It describes the minimum silver content and the maximum content of tin, copper, indium, palladium, platinum, zinc, and mercury. It also describes the recommended physical properties of the alloy, specifically, maximum percent creep, percent dimensional change, and compressive strength after 1 hour and after 24 hours. This standard also describes the test methods for determining physical properties. This standard addresses consistency of chemical composition and the important physical properties of the restorative material. This aspect of the special control allows the practitioner to know what substances are contained in the product, which will allow the practitioner to provide better counsel to patients who are allergic.

The standard also addresses the risks identified by the panel related to improper storage, trituration, and handling by providing recommendations, specifications, and instructions for proper handling, storage, and trituration.

This standard also has packaging and labeling instructions including a recommendation to list elements present in the alloy that are in concentrations greater than 0.1 percent, (see ISO 1559: 1995 section 7.2.1(f)). These packaging and labeling recommendations are consistent with the FDA labeling guidance discussed previously in all respects except one: The recommendation concerning the listing of ingredients. The specification in ISO 1559:1995 section 7.2.1(f) suggests listing only those elements present in the alloy in concentrations greater than 0.1 percent mass/mass (m/m), whereas the FDA labeling guidance recommends listing all ingredients in the product labeling. FDA is not incorporating this aspect of section 7.2.1 of ISO 1559:1995 as a special control because it believes all ingredients, even in concentrations smaller than 0.1 percent(m/m) could cause allergic reactions in some subset of persons. Therefore, FDA believes that practitioners should be informed of all ingredients. If practitioners are informed of the ingredients they will be able to counsel patients on appropriate treatment options.

This standard may be obtained from the International Organization for Standardization, Case Postale, Geneva, Switzerland, CH-1121. ISO also maintains a site on the Internet at http://www.iso.org.

FDA is also proposing to adopt ANSI/ADA's ''Specification No. 6–1987 for Dental Mercury'' as a special control for dental mercury (§ 872.3700) and encapsulated alloy/mercury (§ 872.3070). This standard specifies the specifications and test methods for mercury suitable for the preparation of dental amalgam and provides recommendations for packaging and marketing. It recommends packaging in air tight containers, and providing hazard warnings regarding mercury hygiene. This standard will allow the dentist to be aware of the physical properties of the mercury that will be used for restorations that will enable the dentist to better counsel allergic patients and will alert the dentist to mercury hygiene procedures. The risks identified by the Panel, including toxicity resulting from improper handling and storage that may result in systemic absorption of liquid mercury through the skin, local chemical sensitivity reaction, and inhalation of minute amounts of mercury vapor, are addressed in the standard by detailed recommendations for mercury manipulation and its packaging information, transport and handling procedures. This standard may be obtained from ANSI/AAMI, 11 West 42d St., New York, NY 10036. ANSI also maintains a site on the Internet at http://www.ansi.org.

VII. Environmental Impact

The agency has determined under 21 CFR 25.34(b) that this action is of a type that does not individually or cumulatively have a significant effect on the human environment. Therefore, neither an environmental assessment nor an environmental impact statement is required.

VIII. Paperwork Reduction Act of 1995

FDA has tentatively determined that this proposed rule does not contain any new information collection requirements and, therefore, clearance by the Office of Management and Budget under the Paperwork Reduction Act of 1995 is not necessary.

IX. Analysis of Impacts

FDA has examined the impacts of the proposed rule under Executive Order 12866 and the Regulatory Flexibility Act (5 U.S.C. 601–612) (as amended by subtitle D of the Small Business Regulatory Fairness Act of 1996 (Public Law 104–121)), and the Unfunded Mandates Reform Act of 1995 (Public Law 104–4). Executive Order 12366 directs agencies to assess all costs and benefits of available regulatory alternatives and, when regulation is necessary, to select regulatory approaches that maximize net benefits (including potential economic, environmental, public health and safety, and other advantages; distributive impacts; and equity). The agency believes that this proposed rule is consistent with the regulatory philosophy and principles identified in the Executive order. In addition, the classification actions are not significant regulatory actions as defined by the Executive order. If a rule has a significant economic impact on a substantial number of small entities, the Regulatory Flexibility Act requires agencies to analyze regulatory options that would minimize any significant impact of a rule on small entities.

The agency certifies that these proposed classification actions, if finalized, will not have a significant economic impact on a substantial number of small entities. In addition, this proposed rule will not impose costs of $100 million or more on either the private sector or State, local, and tribal governments in the aggregate, and therefore a summary statement of analysis under section 202(a) of the Unfunded Mandates Reform Act of 1995 is not required.

The proposed classification actions will affect the three separate devices: Dental mercury, amalgam alloy, and encapsulated dental amalgam. Professional dental groups have recommended the use of encapsulated dental amalgam over the other separate products. According to FDA data, encapsulated amalgam now accounts for over 99 percent of the amalgam market. Encapsulated dental amalgam is typically purchased and stored in packages of 80 capsules. These packages are kept at hand in dental clinics until needed. A typical restoration is expected to require two capsules of amalgam.

According to FDA records, there are 35 manufacturers of dental mercury, amalgam alloy, and encapsulated dental amalgam. In total, FDA expects that 40 distinct products will be affected by the proposed classification actions. Over 200 million dental restorations were performed during the last year for which FDA has data (1999), of which 64 million utilized dental amalgam (ADA, 1999). There are currently approximately 155,000 active dentists operating in 145,000 separate clinics (Bureau of Labor Statistics, 1998).

FDA is proposing to: (1) Issue a separate classification regulation for encapsulated amalgam alloy and dental mercury; (2) amend the classification for amalgam alloy by adding special controls; and (3) reclassify dental mercury from class I (general controls) to class II. FDA is proposing that all three products would have the same labeling guidance as a special control. In addition, FDA is proposing that dental mercury would have a voluntary ANSI standard as a special control, encapsulated alloy and dental mercury would have voluntary ANSI and ISO standards as special controls, and the amalgam alloy products would have a voluntary ISO standard as a special control.

FDA does not expect any change in costs related to the voluntary standard special controls. Manufacturers that export encapsulated amalgam are already responsible for meeting these voluntary standards, and other manufacturers currently follow equivalent standardized methods. Any change in performance test procedures is likely to result in little, if any, incremental change in production costs.

The special control labeling guidance, however, would entail some minimal costs to manufacturers. While some manufacturer's products currently include ingredient labeling, there is no consistent industry format. FDA is recommending a consistent label that will allow interested consumers of dental amalgam to easily obtain necessary information that may result in mercury exposure avoidance. Thus, FDA believes that manufacturers of these products will redesign their labeling or develop for the first time ingredient labeling as a result of these proposed classification actions.

FDA has developed estimates of the costs of enhanced labeling for dental amalgam. This estimate is based on costs developed by a consultant firm (Eastern Research Group (ERG)) for developing labeling for similar medical devices, specifically medical gloves (Ref. 21). These estimates include the costs of artwork, design, regulatory review, production, and application. Overall, the cost of developing a new label under these guidelines is estimated to be $1,444 (or approximately $1,500). FDA expects that 40 labels will be developed, 1 label for each product produced by the 35 manufacturers of the three devices. Thus, the total cost of designing and applying enhanced labels is expected to equal $60,000 for 40 products. Over an estimated 5-year useful life (based on estimated cycle of labeling in the device industry), the average annualized cost to industry of this requirement (at 7 percent discount rate) is approximately $15,000.

FDA does not expect the proposed classification actions to affect dental clinics.

FDA believes the costs of developing new labeling (approximately $1,500) per product are not significant for a substantial number of small entities. The dental instrument and supplies industry, standard industrial code (SIC 3843) is typified by small establishments. Only about 35 of the approximately 650 establishments in the industry have more than 100 employees. (According to the Small Business Administration, any entity with fewer than 500 employees is considered small for this industry). These establishments are highly specialized (93 percent of their shipments are in this industry group) and concentrated (97 percent of dental sales were from these establishments). Total value of shipments was estimated at $2.0 billion, or about $125,000 per employee.

The Bureau of Census (Census) has estimated that 12 percent of all industry shipments come from dental establishments with fewer than five employees. Using the Census figures for dental manufacturers that have fewer than five employees, the average value of their shipments would equal $1.25 million per year. The proposed classification actions would result in the design and application of enhanced labeling, at a cost of $1,500 per product. There are 35 manufacturers producing 40 products. Assuming one manufacturer produces six products, the costs for the manufacturer producing six products would be $9,000 and the cost for manufacturers producing one product would be $1,500. The costs would only be approximately 0.1 percent to 0.7 percent (less than 1.0 percent) of the expected revenues for an extremely small entity. Thus, under to the Regulatory Flexibility Act (5 U.S.C. 605(b)), FDA certifies that the proposed regulations will not have a significant economic impact on a substantial number of small entities.

X. Request for Comments

Interested persons may submit to the Dockets Management Branch (address above) written or electronic comments regarding this proposal by May 21, 2002. Two copies of any comments are to be submitted, except that individuals may submit one copy. Comments are to be identified with the docket number found in brackets in the heading of this document. Received comments may be seen in the office above between 9 a.m. and 4 p.m. Monday through Friday.

XI. Effective Dates

FDA proposes that any final rule that may issue based on this proposal become effective 30 days after its date of publication in the **Federal Register**.

XII. References

The following references have been placed on display in the Dockets Management Branch (address above) and may be seen by interested persons between 9 a.m. and 4 p.m., Monday through Friday.

1. Dental Amalgam: A Scientific Review and Recommended Public Health Service Strategy for Research, Education and Regulation; Public Health Service, U.S. Department of Health and Human Services, January 1993.
2. Update Statement by the U.S. Public Health Service on the Safety of Dental Amalgam, September 1, 1995.
3. Citizen petition Docket No. 93P–0424, citizen petition Docket No. 94P-0354/CP1, and citizen petition from Dr. Baylin et al.
4. Summary of the documented review of scientific studies referenced in the dental amalgam petitions, May 28, 1997.
5. Response to citizen petition Docket No. 93P-0424/CP1, letter to Robert E. Reeves, Esq., dated October 31, 1997; response to citizen petition Docket No. 94P–0354, letter to Robert E. Reeves, Esq., dated November 10, 1997; and response to citizen petition submitted to the National Institute for Environmental Health Sciences referred to FDA for reply, letter to Michael A. Baylin, D.D.S. dated October 31, 1997.
6. Swedish National Board of Health and Welfare, Possible Health Effects and Dental Amalgam, 1994.
7. Dental Amalgam—A Report with Reference to the Medical Devices Directive 93/42/EEC from an Ad Hoc Working Group Mandated by the European Commission, June 1998.
8. The Safety of Dental Amalgam, Health Canada, 1995.
9. Dental Amalgam and Human Health (A Current Consensus); WHO Collaborating Centre in Oral Health, Wellington School of Medicine, University of Otego, Wellington, New Zealand, June 1996.
10. The Safety of Dental Amalgam: A State of the Art Review, Conseil d'Evaluation des Technologies de la Sante' de Quebec, April 1997.
11. Consensus Statement on Dental Amalgam, World Health Organization Consultation on Assessing the Risks and Benefit to Oral Health, Oral Care and Environment Using Dental Amalgam and its Replacement, March 7, 1997, draft.
12. Transcript from 1993 meeting of the Food and Drug Administration Dental Products (Advisory) Panel, December 1 to 3, 1993, and transcript from 1994 meeting of the Food and Drug Administration's Dental Products (Advisory) Panel, June 29, 1994.
13. Enwonwu, C. O., ''Potential Health Hazard of Use of Mercury in Dentistry: Critical Review of the Literature'' *Environmental Research* 42:257–274, 1987.
14. Haikel, Y. et al. ''Exposure to mercury vapor during setting, removing, and polishing amalgam restorations'' *Journal of Biomedical Materials Research* 24:1551–1558, 1990.
15. Mandel, Irwin D, ''Amalgam Hazards; An Assessment of Research'' *Journal of the American Dental Association*, 122:62–65 August 1991.
16. Corbin, Stephen B, ''The Benefits and Risks of Dental Amalgam: Current Findings Reviewed'' *Journal of the American Dental Association*, 125:381–387, April 1994.
17. Mackert, J. R., ''Factors Affecting Estimation of Dental Amalgam Mercury Exposure from Measurements of Mercury Vapor Levels in Intra-oral Expired Air'' *Journal of Dental Research*, 66 No. l2:1775–1780, December 1987.
18. Mackert J. Rodway, ''Dental Amalgam and Mercury'' *Journal of the American Dental Association*, 122:61, August 1991.
19. Reinhardt, John W., ''Risk Assessment of Mercury Exposure from Dental Amalgams'' *Journal of Public Health*, 48 No. 3, Summer 1988.
20. Jacobson, Elizabeth D., ''Regulatory Issues in Dentistry: How Dentists Can Participate'' *Journal of American Dental Associates*, 4:444–50, April 12, 1994.
21. Eastern Research Group; ''Preliminary Estimates: Labeling and Related Testing Costs for Medical Glove Manufacturers,'' memorandum, January 18, 1999.

List of Subjects in 21 CFR Part 872

Medical devices.

Therefore, under the Federal Food, Drug, and Cosmetic Act and under authority delegated to the Commissioner of Food and Drugs, it is proposed that 21 CFR part 872 be amended as follows:

PART 872—DENTAL DEVICES

1. The authority citation for 21 CFR part 872 continues to read as follows:

Authority: 21 U.S.C. 351, 360, 360c, 360e, 360j, 371.

2. Section 872.3050 is amended by revising paragraph (b) to read as follows:

§ 872.3050 Amalgam alloy.

* * * * *

(b) *Classification*. Class II (special controls). The special controls for this device are:

(1) International Standard ''ISO 1559:1995 Dental Materials—Alloys for Dental Amalgam,'' and

(2) FDA's ''Special Control Guidance for Industry on Encapsulated Amalgam, Amalgam Alloy, and Dental Mercury Labeling.''

3. Section 872.3070 is added to read as follows:

§ 872.3070 Encapsulated amalgam alloy and mercury.

(a) *Identification*. Encapsulated amalgam alloy and mercury is a device composed of elemental mercury and amalgam alloy, separated by a septum, which, when placed in a dental amalgamator, produces dental amalgam which is intended for the restoration of teeth.

(b) *Classification*. Class II (special controls). The special controls for this device are:

(1) ''ISO 1559:1995 Dental Materials—Alloys for Dental Amalgam,''

(2) ANSI/ADA's ''Specification No. 6–1987 for Dental Mercury,'' and

(3) FDA's ''Special Control Guidance for Industry on Encapsulated Amalgam, Amalgam Alloy, and Dental Mercury Labeling.''

4. Section 872.3700 is amended by revising paragraph (b) to read as follows:

§ 872.3700 Dental mercury.

* * * * *

(b) *Classification*. Class II (Special Controls). The special controls for this device are:

(1) ANSI/ADA ''Specification No. 6–1987 for Dental Mercury,'' and

(2) FDA's ''Special Control Guidance Document on Encapsulated Amalgam, Amalgam Alloy, and Dental Mercury Labeling.''

Dated: February 7, 2002.

Margaret M. Dotzel,

Associate Commissioner for Policy.

[FR Doc. 02–4028 Filed 2–19–02; 8:45 am]

BILLING CODE 4160–01–S

DEPARTMENT OF THE TREASURY

Internal Revenue Service

26 CFR Part 1

[REG–209114–90]

RIN 1545–AH49

Golden Parachute Payments

AGENCY: Internal Revenue Service (IRS), Treasury.

ACTION: Notice of proposed rulemaking and notice of public hearing.

SUMMARY: This document contains proposed regulations relating to golden parachute payments to provide guidance to taxpayers who must comply with section 280G. Proposed regulations under section 280G were previously published in the **Federal Register** on May 5, 1989 (the 1989 proposed regulations). These proposed regulations are proposed to apply to any payments that are contingent on a change in ownership or control occurring on or after January 1, 2004. Taxpayers may rely on these proposed regulations until the effective date of the final regulations. Alternatively, taxpayers may rely on the 1989 regulations for any payment contingent on a change in ownership or control that occurs prior to January 1, 2004.

DATES: Written or electronic comments must be received by June 5, 2002. Requests to speak and outlines of topics to be discussed at the public hearing scheduled for June 26, 2002, must be received by June 5, 2002.

ADDRESSES: Send submissions to CC:ITA:RU (REG–209114–90), room 5226, Internal Revenue Service, POB 7604, Ben Franklin Station, Washington, DC 20044. Submissions may be hand delivered Monday through Friday between the hours of 8 a.m. and 5 p.m. to: CC:ITA:RU (REG–209114–90), Courier's Desk, Internal Revenue Service, 1111 Constitution Avenue, NW, Washington, DC or sent electronically, via the IRS Internet site *www.irs.gov/regs.* The public hearing will be held in the IRS Auditorium, Internal Revenue Building, 1111 Constitution Avenue, NW, Washington, DC.

FOR FURTHER INFORMATION CONTACT: Concerning the regulations, Erinn Madden at (202) 622–6030 (not a toll-free number). To be placed on the attendance list for the hearing, please contact LaNita M. Vandyke at (202) 622–7180.

SUPPLEMENTARY INFORMATION:

Background

This document contains proposed amendments to 26 CFR part 1 under section 280G of the Internal Revenue Code (Code). Sections 280G and 4999 of the Code were added to the Code by sec. 67 of the Deficit Reduction Act, Public Law 98–369 (98 Stat. 585). Section 280G was amended by sec. 1804(j) of the Tax Reform Act of 1986, Public Law 99–514 (100 Stat. 2807), sec. 1018(d) of the Technical and Miscellaneous Revenue Act of 1988, Public Law 100–647 (102 Stat. 3581) and sec. 1421 of the Small Business Job Protection Act of 1996, Public Law 104–188 (110 Stat. 1755).

Section 280G denies a deduction to a corporation for any excess parachute payment. Section 4999 imposes a 20-percent excise tax on the recipient of any excess parachute payment. Related provisions include section 275(a)(6), which denies the recipient a deduction for the section 4999 excise tax, and section 3121(v)(2)(A), which relates to Federal Insurance Contributions Act. Proposed regulations (PS–217–84) under section 280G were previously published in the **Federal Register** at 54 FR 19390 on May 5, 1989 (the 1989 proposed regulations).

Explanation of Provisions

Overview

Section 280G denies a deduction to a corporation for any excess parachute payment. Section 4999 imposes a 20-percent excise tax on the recipient of any excess parachute payment. The disallowance of the deduction under section 280G is not contingent on the imposition of the excise tax under section 4999, and the imposition of the excise tax under section 4999 is not contingent on the disallowance of the deduction under section 280G. For example, an individual may be subject to the 20-percent excise tax under section 4999 even though the payor is a foreign corporation not subject to United States income tax.

Section 280G(b)(2)(A) defines a *parachute payment* as any payment that meets all of the following four conditions: (a) The payment is in the nature of compensation; (b) the payment is to, or for the benefit of, a disqualified individual; (c) the payment is contingent on a change in the ownership of a corporation, the effective control of a corporation, or the ownership of a substantial portion of the assets of a corporation (a change in ownership or control); and (d) the payment has (together with other payments described in (a), (b), and (c) of this paragraph with respect to the same individual) an aggregate present value of at least 3 times the individual's base amount. Section 280G(b)(2)(B) provides that the term parachute payment also includes any payment in the nature of compensation to, or for the benefit of, a disqualified individual if the payment is pursuant to an agreement that violates any generally enforced securities laws or regulations (securities violation parachute payment).

Section 280G(b)(1) defines the term excess parachute payment as an amount equal to the excess of any parachute payment over the portion of the disqualified individual's base amount that is allocated to such payment. For this purpose, the portion of the base amount allocated to a parachute payment is the amount that bears the same ratio to the base amount as the present value of the parachute payment bears to the aggregate present value of all such payments to the same disqualified individual.

Generally, excess parachute payments may be reduced by certain amounts of reasonable compensation. Section 280G(b)(4)(B) provides that, except in the case of securities violation parachute payments, the amount of an excess parachute payment is reduced by any portion of the payment that the taxpayer establishes by clear and convincing evidence is reasonable compensation for personal services actually rendered by the disqualified individual before the date of change in ownership or control. Such reasonable compensation is first offset against the portion of the base amount allocated to the payment.

The 1989 proposed regulations provided guidance regarding the application of section 280G to corporations and individuals. Although many aspects of the 1989 proposed regulations were well-received, the IRS has received numerous comments requesting modification and clarification of the 1989 proposed regulations. In response, these proposed regulations clarify and revise, as described below, the 1989 proposed regulations. Many aspects of the 1989 proposed regulations are preserved, and these proposed regulations retain the same organizational structure as the 1989 proposed regulations. Major modifications to the 1989 proposed regulations are described below.

Disqualified Individuals

A payment constitutes a parachute payment only if the payment is made to (or for the benefit of) a disqualified individual. Section 280G(c) defines the term *disqualified individual* to include any individual who (a) is an employee or independent contractor who performs personal services for a corporation, and (b) is an officer, shareholder, or highly-compensated individual.

The determination of whether an individual is a disqualified individual under these proposed regulations is substantially the same as under the 1989 proposed regulations, with three significant changes. First, Q/A–17 of the 1989 regulations provides a *de minimis* rule for purposes of identifying which shareholders of a corporation are disqualified individuals. Under the 1989 proposed regulations, an individual is a shareholder for purposes of section 280G if the individual, at any time during the disqualified individual determination period, owns stock of a corporation with a fair market value exceeding the lesser of $1 million or 1 percent of the total fair market value of the outstanding shares of all classes of the corporation's stock. Since the issuance of the 1989 proposed regulations, it has become apparent that this rule may include individuals who do not possess significant influence over the corporation. Therefore, under Q/A–17 of these proposed regulations, the $1 million test is eliminated. Under these proposed regulations, an individual is a shareholder only if, during the disqualified individual determination period, the individual owns stock of a corporation with a fair market value that exceeds 1 percent of the total fair market value of the outstanding shares of all classes of the corporation's stock. The constructive ownership rules of section 318(a) continue to apply for purposes of determining the amount of stock owned by the individual. Under these rules, for example, to determine the amount of stock owned by an individual, the stock underlying vested stock options is considered constructively owned by that individual.

Second, these proposed regulations modify the annualized compensation method for determining who is a highly-compensated individual under Q/A–19. Under the 1989 proposed regulations, no individual whose annualized compensation during the disqualified individual determination period is less than $75,000 is treated as a highly-compensated individual, even if the individual otherwise satisfies the definition of a highly-compensated individual. Q/A–19 is modified to provide that an individual must have annualized compensation equal to at least the amount described in section 414(q)(1)(B)(i). This amount for 2002 is $90,000 and is adjusted periodically for cost-of-living increases. This modification both updates the amount provided in the 1989 proposed regulations and provides a mechanism to update this amount periodically without further amendment of these regulations.

Finally, these proposed regulations change the disqualified individual determination period under Q/A–20. Under the 1989 proposed regulations, the disqualified individual determination period is the portion of the year of the corporation ending on the date of the change in ownership or control and the immediately preceding twelve months (with an option to use the calendar year or the corporation's fiscal year). Q/A–20 of these proposed regulations is modified to change this period to the twelve months prior to and ending on the date of the change in ownership or control of the corporation. Under this rule, the disqualified individual determination period is the same length for any change in ownership or control and is not affected by the date of the change in ownership or control.

Payment in the Nature of Compensation

A payment may be a parachute payment only if it is a payment in the nature of compensation. All payments, in whatever form, are payments in the nature of compensation if the payments arise out of the employment relationship or are associated with the performance of services. In Q/A–11, these proposed regulations clarify that payments in the nature of compensation include cash, the right to receive cash, or a transfer of property.

Q/A–13 of the 1989 proposed regulations provides that the transfer of a nonstatutory option is treated as a payment in the nature of compensation (even if the option does not have a readily ascertainable fair market value within the meaning of § 1.83–7(b)). The 1989 proposed regulations reserve the issue of the treatment of statutory options (i.e., options to which section 421 applies). These proposed regulations revise Q/A–13 to address the treatment of statutory stock options to provide that nonstatutory stock options and statutory stock options are treated the same. Because both the transfer of a statutory option and the transfer of a nonstatutory stock option are payments in the nature of compensation, there is no basis for distinguishing between these two types of options for purposes of section 280G.

In addition, these proposed regulations revise Q/A–13 with respect to the valuation of both statutory and nonstatutory stock options. Under the 1989 proposed regulations, the value of an option with an ascertainable fair market value is determined under all the facts and circumstances, including the difference between the option's exercise price and the value of the property at the time of vesting, the probability of an increase or decrease in the value of such property, and the length of the option exercise period.

Since the issuance of the 1989 proposed regulations, commentators have indicated that Q/A–13 does not provide sufficient guidance about the determination of the value of a stock option. In particular, commentators question whether the intrinsic value of the option (the difference between the exercise price and the value of the property, or spread) determined at the time of the change in ownership or control, or a value determined under a valuation model such as Black-Scholes, should be used for purposes of section 280G. Using the factors listed in the 1989 proposed regulations results in a value different from the value obtained from using only the difference between the exercise price and the value of the property. Commentators have also noted that valuation methods other than spread are often complicated and difficult to apply in some circumstances, particularly when the stock underlying the option is not publicly traded.

These proposed regulations continue to provide for the use of the factors described in the 1989 proposed regulations. To provide further guidance on acceptable and administrable methods for valuing stock options, these proposed regulations delegate authority to the Commissioner to provide methods for valuation of stock options

through published guidance. Rev. Proc. 2002–13, 2002–8 I.R.B. (February 25, 2002) published in conjunction with these proposed regulations, provides several valuation methods. One of the methods permitted under this revenue procedure is a simplified safe harbor approach modeled after the Black-Scholes valuation method. The safe harbor allows a corporation to establish a value for stock options based on spread at the time of the change in ownership or control, the remaining term of the option, and a basic assumption regarding the volatility of the underlying stock. Other factors relevant to the Black-Scholes valuation model, including a risk-free rate of return and dividend yield, are addressed in the table contained in the revenue procedure. The safe harbor valuation method provided in the revenue procedure may be used without regard to whether the underlying stock is publicly traded.

Contingent on Change

To be a parachute payment, a payment in the nature of compensation to a disqualified individual must be contingent on a change in ownership or control. Q/A–22 of the 1989 proposed regulations provides guidance on when a payment is contingent on a change in ownership or control. Generally, a payment is treated as contingent on a change in ownership or control if the payment would not in fact have been made had no change in ownership or control occurred. A payment generally is treated as one which would not in fact have been made in the absence of a change in ownership or control unless it is substantially certain, at the time of the change, that the payment would have been made whether or not the change in ownership or control occurred.

These proposed regulations clarify in Q/A–22 that a payment is contingent on a change in ownership or control if the payment would not have been made absent the change in ownership or control, even if the payment is also contingent on a second event, such as termination of employment within a period following the change in ownership or control. In addition, as under the 1989 proposed regulations, a payment generally is treated as contingent on a change in ownership or control if (a) the payment is contingent on an event that is closely associated with such a change, (b) a change in ownership or control actually occurs, and (c) the event is materially related to the change in ownership or control. The fact that a payment that is contingent on an event closely associated with a change in ownership or control is also conditioned on the occurrence of a second event does not affect the determination that the payment is contingent on a change in ownership or control as the result of the occurrence of the first event.

Under Q/A–24 of the 1989 proposed regulations, the entire amount of a payment is generally treated as contingent on a change in ownership or control. These proposed regulations clarify that the general rule of Q/A–24(a) (and not the special rules in either Q/A–24(b) or (c), discussed below) applies to the payment of amounts due under an employment agreement on a termination of employment or change in ownership or control that, without regard to the change, would have been paid for the performance of services after the termination of employment or change in ownership or control, as applicable. Also, the general rules of Q/A–24(a) apply to the accelerated payment of an amount that is otherwise payable only on the attainment of a performance goal or contingent on an event or condition other than the continued performance of services for a specified period of time. In situations governed by Q/A–24(a), the determination of whether a portion of the payment is reasonable compensation for services rendered before, on, or after the change in ownership or control is determined under Q/As–38 through 44. With respect to amounts due under an employment agreement, however, in most situations, a reduction for reasonable compensation for services rendered before the change in ownership or control is inappropriate, given the general expectation that an individual is not under-compensated for services rendered before a change in ownership or control. See Conf. Rep. No. 98–861, at 852 (1984).

Q/A–24(b) and (c) provide an objective method for determining the portion of a payment that is treated as contingent on a change in ownership or control for certain types of payments. These rules are not appropriate in situations such as the acceleration of salary payments under an employment agreement, when the periodic nature of the payments for services means that there is no issue in determining the amount of the payment that is accelerated, or in situations where a payment is conditioned on achievement of a performance goal or other event.

As under the 1989 proposed regulations, these proposed regulations provide that a payment is treated as contingent on a change in ownership or control if the change accelerates the time at which the payment is made or accelerates the vesting of a payment. Q/A–24(b) and (c) provide rules for determining the portion of such payment that is treated as contingent on the change in ownership or control. These proposed regulations clarify when Q/A–24(b) and (c) apply to a contingent payment.

These proposed regulations clarify that Q/A–24(b) applies if a payment is vested, without regard to the change in ownership or control, and is treated as contingent on a change in ownership or control because the change accelerates the time the payment is made. For example, if an individual has a vested right to a payment at normal retirement age under a nonqualified deferred compensation plan, but instead that payment is made immediately following a change in ownership or control, Q/A–24(b) applies to determine the portion, if any, of the payment that is treated as contingent on the change in ownership or control.

These regulations clarify that Q/A–24(c) applies to a payment that becomes vested as a result of a change in ownership or control to the extent that (i) without regard to the change, the payment was contingent only on the performance of services for the corporation for a specified period of time and (ii) the payment is attributable, at least in part, to the performance of services before the date the payment is made or becomes certain to be made. For example, if an individual will receive a bonus if employed at the end of a 3-year period, but the bonus is paid immediately on the date of the change of control, Q/A–24(c) applies to determine the portion of the payment that is treated as contingent on the change in ownership or control.

Q/A–24(b) provides that, when a payment is accelerated, the portion of the payment that is contingent on the change is the amount by which the accelerated payment exceeds the present value of the payment absent acceleration. Q/A–24(b) further provides that if the amount of a payment without acceleration is not reasonably ascertainable, and the acceleration does not significantly increase the value of the payment, then the present value of the payment absent the acceleration is equal to the amount of the accelerated payment. As a result, the value of the accelerated payment is equal to the value of the payment absent acceleration and no portion of the payment is treated as contingent on a change in control. If the value of a payment absent acceleration is not reasonably ascertainable and the acceleration significantly increases the value of the payment, the future value of the payment is equal to the amount

of the accelerated payment. When the future value (as opposed to the present value) of the payment is deemed to be the amount of the accelerated payment, then there is an excess and, therefore, a portion of the payment is treated as contingent on the change.

Q/A–24(c) provides that the portion of the payment treated as contingent on the change when both vesting and payment are accelerated is the lesser of (1) the payment or (2) the amount determined under Q/A–24(b) plus an additional amount to reflect the lapse of the obligation to perform additional services. Q/A–24(c) provides that for purposes of determining the amount under paragraph (b), the acceleration of the vesting of a stock option or the lapse of a restriction on restricted stock is considered to increase significantly the value of the payment.

Because Q/A–24(b) and (c) operate to provide an objective basis for determining the portion of a payment that is earned as of the date of a change in ownership or control, and therefore, not contingent on a change in ownership or control, these proposed regulations clarify that the rules in Q/As–38 through 44 (which provide rules related to reasonable compensation for services rendered), are inapplicable if the special rules in Q/A–24(b) or (c) apply to a payment.

Change in Ownership or Control

These proposed regulations follow the same approach as the 1989 proposed regulations for determining when a change in ownership or control occurs. However, these proposed regulations clarify that, for purposes of determining whether two or more persons acting as a group are considered to own more than 50 percent of the total fair market value or total voting power of the stock of a corporation on the date of a merger, acquisition, or similar transaction involving that corporation, a person who owns stock in both corporations involved in the transaction is treated as acting as a group with respect to the other shareholders in a corporation only to the extent of such person's ownership of stock in that corporation prior to the transaction, and not with respect to his or her ownership in the other corporation. For example, assume individual A owns stock in both corporations X and Y when corporation X acquires stock in Y in exchange for X stock. In determining whether corporation Y has undergone a change in ownership or control, individual A is considered to be acting as a group with other shareholders in corporation Y only to the extent of A's holdings in corporation Y prior to the transaction, and not with respect to A's ownership in X. In determining whether Corporation X has undergone a change in ownership or control, individual A is considered to be acting as a group with other shareholders in Corporation X only to the extent of individual A's holdings in Corporation X prior to the transaction, and not with respect to individual A's ownership interest in Corporation Y. This rule applies without regard to the type of shareholder involved (i.e., whether the shareholder is an individual or an institutional shareholder, such as a corporation, mutual fund, or trust).

Comments are requested with respect to whether the change in ownership or control rules in these proposed regulations should be further revised. Comments are also requested with respect to whether additional guidance is necessary regarding the application of the change in ownership or control provisions, and these proposed regulations in general, in the context of specific business situations such as bankruptcy.

Shareholder Approval Requirements

Section 280G specifically exempts from the definition of the term *parachute payment* several types of payments that would otherwise constitute parachute payments. Deductions for payments exempt from the definition of *parachute payment* are not disallowed by section 280G, and such exempt payments are not subject to the 20-percent excise tax of section 4999. In addition, such exempt payments are not taken into account in applying the 3-times-base-amount test of section 280G(b)(2)(A)(ii).

The most significant revisions made by these proposed regulations with respect to exempt payments are clarifications to the shareholder approval requirements which must be met for payments with respect to a corporation in which no stock is readily tradeable on an established securities market or otherwise immediately before the change in ownership or control.

Section 280G(b)(5)(B) provides that the shareholder approval requirements are met if two conditions are satisfied. First, the payment is approved by a vote of the persons who owned, immediately before the change in ownership or control, more than 75% of the voting power of all outstanding stock of the corporation. Second, there is adequate disclosure to shareholders of all material facts concerning all payments which (but for this rule) would be parachute payments with respect to a disqualified individual. Since the issuance of the 1989 proposed regulations, commentators have indicated that the 1989 proposed regulations do not fully explain how the shareholder approval requirements operate or accurately reflect business practices connected with a change in ownership or control.

The proposed regulations clarify the process of obtaining shareholder approval within the structure provided by section 280G(b)(5)(B). Under this section, a shareholder approval vote is valid only if (1) it is a vote of more than 75% of the shareholders entitled to vote based on ownership in the corporation immediately before the change in ownership or control, and (2) disclosure is made with respect to all payments that would otherwise be parachute payments for an individual.

The first step in obtaining shareholder approval is to identify the shareholders entitled to vote. Q/A–7 is revised to clarify that stock held by a disqualified individual (or by certain entity shareholders) is not entitled to vote with respect to a payment to be made to any disqualified individual and that this stock is disregarded in determining whether the more than 75% approval requirement has been met. Once the stock entitled to vote is determined, more than 75% of the voting power of such stock must approve the payment. Q/A–7 also includes a rule of administrative convenience providing that a vote to approve the payment does not fail to be a vote of the shareholders who own stock immediately before the change in ownership or control if eligibility to vote is based on the shareholders of record at the time of any vote taken in connection with a transaction or event giving rise to the change in ownership or control within the three-month period ending on the date of the change in ownership or control. This rule only applies if the disclosure requirements are also met.

These proposed regulations further clarify that not all parachute payments must be subject to a shareholder vote to satisfy the shareholder approval requirements with respect to a payment. It is permissible for only a portion of the payments that would otherwise be made to a disqualified individual to be subject to vote. For example, assume that a disqualified individual with a base amount of $150,000 would receive payments that (but for the exemption for a corporation with no readily tradeable stock) would be parachute payments including (i) a bonus payment of $200,000, (ii) vesting in stock options with a fair market value of $500,000, $200,000 of which is contingent on the change in ownership or control, and (iii) severance payments of $100,000. In this

situation, assuming all of the payments are disclosed, the corporation may submit to the shareholders for approval (1) all of the payments, (2) any one of the three payments, or (3) $50,001 of any one of the payments (e.g., options with a value of $50,001). The issue submitted to a shareholder vote must be whether the payment will be made to the disqualified individual, not whether the corporation will be able to deduct the payment. In addition, the vote must be a separate vote of the shareholders. Therefore, the merger, acquisition, or other transaction cannot be conditioned on the shareholders' approval of the payment.

These proposed regulations also clarify that the shareholder approval requirements are met by a single vote on all payments submitted to the vote, including payments to more than one disqualified individual (assuming the disclosure requirements, described below, are also met).

The shareholder approval requirements also require adequate disclosure of all material facts concerning the amount of all parachute payments. For this purpose, the proposed regulations clarify that the amount of all parachute payments to be made to each disqualified individual, and not just the amount of the payments subject to vote, is a material fact. These proposed regulations also clarify that shareholders should be provided with basic information about the type of payments involved (e.g., vesting of stock options or severance payments). This disclosure of information must be made to all shareholders entitled to vote, not just to shareholders with 75% of the voting power entitled to vote.

Reasonable Compensation

The determination of whether amounts are reasonable compensation is relevant for two purposes. First, an excess parachute payment is reduced by any portion of the payment that constitutes reasonable compensation for services actually rendered before a change in ownership or control. Second, amounts that are reasonable compensation for services to be rendered after a change in ownership or control are exempt from the definition of parachute payment. In both situations, reasonable compensation for services must be demonstrated by clear and convincing evidence.

These proposed regulations clarify two issues with respect to reasonable compensation for services performed after a change in ownership or control. The proposed regulations clarify that clear and convincing evidence that a payment is reasonable compensation for services rendered after a change in ownership or control exists if the individual's annual compensation after the change in ownership or control (apart from normal increases) is not significantly greater then the individual's annual compensation before the change in ownership or control, provided that the individual's duties and responsibilities are substantially the same after the change in ownership or control as they were before the change in ownership or control. If the individual's duties and responsibilities have changed, then the clear and convincing evidence must demonstrate that the individual's annual compensation after the change in ownership or control is not significantly greater than the compensation customarily paid by the employer, or by comparable employers, to persons performing comparable services.

Payments to an individual under an agreement that requires the individual to refrain from providing services (such as under a covenant not to compete) may also constitute reasonable compensation for services to be rendered on or after the date of the change in ownership or control. Under Q/A–42 of these proposed regulations, an agreement is treated as an agreement to refrain from services (rather than an agreement for severance pay) if it is demonstrated with clear and convincing evidence that the agreement substantially constrains the individual's ability to perform services and there is a reasonable likelihood that the agreement will be enforced against the individual. If, under the facts and circumstances, the agreement does not satisfy these criteria, the payments under the agreement are instead treated as severance payments under Q/A–44. If the agreement does satisfy these criteria, then the agreement is treated as an agreement for the performance of services, and the payment are exempt from the definition of *parachute payment* to the extent the payments are show to be reasonable compensation under Q/A–42(a)(2).

Application to Tax-Exempt Organizations

Commentators have asked whether a payment with respect to a tax-exempt entity is exempt from the definition of the term *parachute payment*. These proposed regulations clarify that a payment with respect to a tax-exempt entity that would otherwise constitute a parachute payment is exempt from the definition of the term *parachute payment* if the following two conditions are satisfied.

First, the payment must be made by a corporation undergoing a change in ownership or control that is a *tax-exempt organization*, as defined in these proposed regulations. A *tax-exempt organization* is defined as any organization described in section 501(c) that is subject to an express statutory prohibition against inurement of net earnings to the benefit of any private shareholder or individual, an organization described in subsections 501(c)(1) or 501(c)(21), any religious or apostolic organization described in section 501(d), or any qualified tuition program described in section 529.

Second, the organization must meet the definition of *tax-exempt organization*, as defined in these regulations, both immediately before and immediately after the change in ownership or control. If this second condition is not met, a payment made by a *tax-exempt organization* is not exempt from the definition of *parachute payment*.

As noted above, the term *tax-exempt organizations* includes organizations that are described in section 501(c) that already are subject to express statutory rules that prohibit the inurement of the net earnings of such organizations to the benefit of ''any private shareholder or individual.'' Organizations described in the following subsections of 501(c) are *tax-exempt organizations* under application of this rule: 501(c)(3) (including any organization described in subsections 501(e), (f), or (k)), 501(c)(4), 501(c)(6), 501(c)(9), 501(c)(11), 501(c)(13) (but only with respect to those organizations subject to the express anti-inurement provision), 501(c)(19), and 501(c)(26). In light of the existing restrictions on these organizations, the Service and the Treasury Department believe the additional protections of section 280G are unnecessary. In addition, the term *tax-exempt organization* in the proposed regulations includes federal instrumentalities organized under Act of Congress (described in section 501(c)(1)), black lung trusts (described in section 501(c)(21)), certain religious and apostolic organizations (described in section 501(d)) and qualified tuition programs (described in section 529). The Service and the Treasury Department recognize that it may be appropriate to exempt payments made by other types of tax-exempt organizations. Comments are requested on whether any additional categories of organizations should be included in the definition of *tax-exempt organization* for purposes of section 280G.

Definition of Corporation

Under the 1989 proposed regulations, *corporation* is defined by reference to section 7701(a)(3) of the Code. These proposed regulations clarify that the term *corporation,* for purposes of section 280G and the regulations thereunder, includes any entity described in § 301.7701–2(b) such as, for example, a real estate investment trust under section 856(a), a corporation that has mutual or cooperative (rather than stock) ownership, such as a mutual insurance company, a mutual savings bank, or a cooperative bank (as defined in section 7701(a)(32)), and a foreign corporation (as defined in section 7701(a)(5)).

Accordingly, the term *corporation* also includes any entity described in § 301.7701–3(c)(1)(v)(A). That regulation provides, in general, that an entity that claims to be, or is determined to be, an entity that is exempt from taxation under section 501(a) is treated as an association for purposes of the Code. Because the definition of *corporation* includes an association, any entity described in § 301.7701–3(c)(1)(v)(A) is a corporation for purposes of sections 7701 and 280G.

Determination of Excess Parachute Payments

Once all parachute payments are identified, the determination of what portion, if any, of each parachute payment is an excess parachute payment is made. This determination is based on the aggregate present value of all parachute payments. These proposed regulations modify the method described in Q/A–33 of the 1989 proposed regulations for determining the present value of a payment contingent on an uncertain future event or condition. Under Q/A–33 of these proposed regulations, if there is at least a 50-percent probability that the payment will be made, the entire present value of a contingent payment should be included for purposes of determining if there are excess parachute payments. If there is less than a 50-percent probability, then the present value of the contingent payment is not included. Once it is certain whether or not the payment will be made, the 3-times-base amount test in Q/A–30 is reapplied if the initial determination as to whether to include the payment was incorrect. If the inclusion or exclusion of the payment for purposes of Q/A–30 at the time of the change in ownership or control was correct, there is no need to reapply the 3-times-base-amount test. In addition, if it is reasonably estimated that there is a less than 50-percent probability that the payment will be made and the payment is not included in the 3-times-base-amount test, but the payment is later made, the 3-times-base-amount test is not reapplied if the test without regard to the contingent payment resulted in a determination that the individual received (or would receive) excess parachute payments and no base amount is allocated to the contingent payment.

Finally, Q/A–31 provides guidance on determining the present value of an obligation to provide health care over a period of years. Under these proposed regulations, the determination of the present value of this obligation should be calculated in accordance with generally accepted accounting principles. For purposes of Q/A–31, it is permissible for the obligation to provide health care to be measured by projecting the cost of premiums for purchased health care insurance, even if no health care insurance is actually purchased. If the obligation to provide health care is made in coordination with a health care plan that the corporation makes available to a group, then the premiums used for this purpose may be group premiums. This method only applies for purposes of determining present value. Premiums for health care insurance can be used for purposes of determining a corporation's loss of deduction or the excise tax obligation for a disqualified individual only to the extent such premiums are actually paid for health care insurance used to satisfy the corporation's obligation to provide health care.

Timing of the Payment of Tax under Section 4999

In general, the excise tax under section 4999 is due at the time that the payment is considered made under Q/A–11 through 13. Q/A–11(b) of these proposed regulations clarifies that, except as provided in Q/A–12 or 13, a payment is considered made in the taxable year that it is includible in the disqualified individual's gross income, or for benefits excludible from income, in the year the benefit is received. Q/A–11(c) of these proposed regulations permits a disqualified individual, for purposes of section 4999, to treat certain payments as made in the year of the change in ownership or control (or the first year for which a payment contingent on a change in ownership or control is certain to be made), even though the payment is not yet includible in income (or otherwise received). This treatment is not available, however, for a payment if the present value is not reasonably ascertainable within the meaning of section 3121(v) and § 1.3121(v)–1(e)(4) or for a payment related to health benefits or coverage. These proposed regulations indicate in Q/A–11(c) that the Commissioner may provide through published guidance that Q/A–11(c) is or is not available with respect to other types of payments.

According to Q/A–11(c) of these proposed regulations, the payment of the excise tax under section 4999 must be made based on the amount calculated for purposes of determining excess parachute payments. Therefore, to the extent that the determination of whether there is an excess parachute payment is based on an incorrect valuation of the payment, the excise tax payment under this provision is also incorrect.

Proposed Effective Date

These regulations are proposed to apply to any payments that are contingent on a change in ownership or control occurring on or after January 1, 2004. Taxpayers may rely on these proposed regulations until the effective date of the final regulations. Alternatively, taxpayers may rely on the 1989 proposed regulations for any payment contingent on a change in ownership or control that occurs prior to January 1, 2004.

Special Analyses

It has been determined that this notice of proposed rulemaking is not a significant regulatory action as defined in Executive Order 12866. Therefore, a regulatory assessment is not required. It has also been determined that section 553(b) of the Administrative Procedure Act (5 U.S.C. chapter 5) does not apply to these regulations, and, because the regulations do not impose a collection of information on small entities, the Regulatory Flexibility Act (5 U.S.C. chapter 6) does not apply. Pursuant to section 7805(f), this notice of proposed rulemaking will be submitted to the Chief Counsel for Advocacy of the Small Business Administration for comment on its impact on small business.

Comments and Public Hearing

Before these proposed regulations are adopted as final regulations, consideration will be given to any written or electronic comments (a signed original and eight (8) copies) that are submitted timely to the IRS. All comments will be available for public inspection and copying.

A public hearing has been scheduled for June 26, 2002, beginning at 10 a.m. in the IRS Auditorium of the Internal Revenue Building, 1111 Constitution Avenue, NW, Washington, DC. All

visitors must present photo identification to enter the building. Because of access restrictions, visitors will not be admitted beyond the immediate entrance area more than 15 minutes before the hearing starts. For information about having your name placed on the building access list to attend the hearing, see the **FOR FURTHER INFORMATION CONTACT** section of this preamble.

The rules of 26 CFR 601.601(a)(3) apply to the hearing. Persons who wish to present oral comments at the hearing must submit written comments and an outline of the topics to be discussed and the time to be devoted to each topic (signed original and eight (8) copies) by June 5, 2002. A period of 10 minutes will be allotted to each person for making comments. An agenda showing the schedule of speakers will be prepared after the deadline for receiving outlines has passed. Copies of the agenda will be available free of charge at the hearing.

Drafting Information

The principal author of these proposed regulations is Erinn Madden, Office of the Division Counsel/Associate Chief Counsel (Tax Exempt and Government Entities). However, other personnel from the IRS and Treasury Department participated in their development.

List of Subjects in 26 CFR Part 1

Income taxes, Reporting and recordkeeping requirements.

Proposed Amendments to the Regulations

The proposed amendments to 26 CFR part 1 are as follows:

PART I—INCOME TAX; TAXABLE YEARS BEGINNING AFTER DECEMBER 31, 1986

1. The authority citation for part 1 is amended by adding the following entry in numerical order to read in part as follows:

Authority: 26 U.S.C. 7805 * * *

Section 1.280G–1 also issued under 26 U.S.C. 280G (b) and (e). * * *

2. Section § 1.280G–1 is added to read as follows:

§ 1.280G–1 Golden parachute payments.

The following questions and answers relate to the treatment of golden parachute payments under section 280G of the Internal Revenue Code of 1986, as added by section 67 of the Tax Reform Act of 1984 (Pub. L. 98–369; 98 Stat. 585) and amended by section 1804(j) of the Tax Reform Act of 1986 (Pub. L. 99–514; 100 Stat. 2807), section 1018(d)(6)–(8) of the Technical and Miscellaneous Revenue Act of 1988 (Pub. L. 100–647; 102 Stat. 3581), and section 1421 of the Small Business Job Protection Act of 1996 (Pub. L. 104–188, 110 Stat. 1755). The following is a table of contents for this section:

Overview:
- Effect of section 280G Q/A–1
- Meaning of ''parachute payment'' Q/A–2
- Meaning of ''excess parachute payment'' Q/A–3
- Effective date of section 280G Q/A–4

Exempt Payments:
- Exempt payments generally Q/A–5
- Exempt payments with respect to certain corporations Q/A–6
- Shareholder approval requirements Q/A–7
- Exempt payments under a qualified plan Q/A–8
- Exempt payments of reasonable compensation Q/A–9

Payor of Parachute Payments Q/A–10

Payments in the Nature of Compensation:
- The nature of compensation Q/A–11
- Property transfers Q/A–12
- Stock options Q/A–13
- Reduction of amount of payment by consideration paid Q/A–14

Disqualified Individuals:
- Meaning of ''disqualified individual'' Q/A–15
- Personal service corporation treated as individual Q/A–16
- Meaning of ''shareholder'' Q/A–17
- Meaning of ''officer'' Q/A–18
- Meaning of ''highly-compensated individual'' Q/A–19
- Meaning of ''disqualified individual determination period'' Q/A–20
- Meaning of ''compensation'' Q/A–21

Contingent on Change in Ownership or Control:
- General rules for determining payments contingent on change Q/A–22
- Payments under agreement entered into after change Q/A–23
- Amount of payment contingent on change Q/A–24
- Presumption that payment is contingent on change Q/A–25, 26
- Change in ownership or control Q/A–27, 28, 29

Three-Times-Base-Amount Test for Parachute Payments:
- Three-times-base-amount test Q/A–30
- Determination of present value Q/A–31, 32, 33
- Meaning of ''base amount'' Q/A–34
- Meaning of ''base period'' Q/A–35
- Special rule for determining base amount Q/A–36

Securities Violation Parachute Payments Q/A–37

Computation and Reduction of Excess Parachute Payments:
- Computation of excess parachute payments Q/A–38
- Reduction by reasonable compensation Q/A–39

Determination of Reasonable Compensation:
- General criteria for determining reasonable compensation Q/A–40
- Types of payments generally considered reasonable compensation Q/A–41, 42, 43

Treatment of severance payments Q/A–44
Miscellaneous rules:
Definition of corporation Q/A–45
Treatment of affiliated group as one corporation Q/A–46
Effective date:
General effective date of section 280G Q/A–47
Effective date of regulations Q/A–48

Overview

Q–1: What is the effect of Internal Revenue Code section 280G?

A–1: (a) Section 280G disallows a deduction for any excess parachute payment paid or accrued. For rules relating to the imposition of a nondeductible 20-percent excise tax on the recipient of any excess parachute payment, see Internal Revenue Code sections 4999, 275(a)(6), and 3121(v)(2)(A).

(b) The disallowance of a deduction under section 280G is not contingent on the imposition of the excise tax under section 4999. The imposition of the excise tax under section 4999 is not contingent on the disallowance of a deduction under section 280G. Thus, for example, because the imposition of the excise tax under section 4999 is not contingent on the disallowance of a deduction under section 280G, a payee may be subject to the 20-percent excise tax under section 4999 even though the disallowance of the deduction for the excess parachute payment may not directly affect the federal taxable income of the payor.

Q–2: What is a parachute payment for purposes of section 280G?

A–2: (a) The term *parachute payment* means any payment (other than an exempt payment described in Q/A–5) that—

(1) Is in the nature of compensation;

(2) Is made or is to be made to (or for the benefit of) a disqualified individual;

(3) Is contingent on a change—

(i) In the ownership of a corporation;

(ii) In the effective control of a corporation; or

(iii) In the ownership of a substantial portion of the assets of a corporation; and

(4) Has (together with other payments described in paragraphs (a)(1), (2), and (3) of this A–2 with respect to the same disqualified individual) an aggregate present value of at least 3 times the individual's base amount.

(b) Hereinafter, a change referred to in paragraph (a)(3) of this A–2 is referred to as a change in ownership or control. For a discussion of the application of paragraph (a)(1), see Q/A–11 through Q/A–14; paragraph (a)(2), Q/A–15 through Q/A–21; paragraph (a)(3), Q/A–22 through Q/A–29; and paragraph (a)(4), Q/A–30 through Q/A–36.

(c) The term *parachute payment* also includes any payment in the nature of compensation to (or for the benefit of) a disqualified individual that is pursuant to an agreement that violates a generally enforced securities law or regulation. This type of parachute payment is referred to in this section as a securities violation parachute payment. See Q/A–37 for the definition and treatment of securities violation parachute payments.

Q–3: What is an excess parachute payment for purposes of section 280G?

A–3: The term excess *parachute payment* means an amount equal to the excess of any parachute payment over the portion of the base amount allocated to such payment. Subject to certain exceptions and limitations, an excess parachute payment is reduced by any portion of the payment which the taxpayer establishes by clear and convincing evidence is reasonable compensation for personal services actually rendered by the disqualified individual before the date of the change in ownership or control. For a discussion of the nonreduction of a securities violation parachute payment by reasonable compensation, see Q/A–37. For a discussion of the computation of excess parachute payments and their reduction by reasonable compensation, see Q/A–38 through Q/A–44.

Q–4: What is the effective date of section 280G and this section?

A–4: In general, section 280G applies to payments under agreements entered into or renewed after June 14, 1984. Section 280G also applies to certain payments under agreements entered into on or before June 14, 1984, and amended or supplemented in significant relevant respect after that date. This section applies to any payment contingent on a change in ownership or control which occurs on or after January 1, 2004. For a discussion of the application of the effective date, see Q/A–47 and Q/A–48.

Exempt Payments

Q–5: Are some types of payments exempt from the definition of the term *parachute payment?*

A–5: (a) Yes, the following five types of payments are exempt from the definition of *parachute payment*—

(1) Payments with respect to a small business corporation (described in Q/A–6 of this section);

(2) Certain payments with respect to a corporation no stock in which is readily tradeable on an established securities market (or otherwise) (described in Q/A–6 of this section);

(3) Payments to or from a qualified plan (described in Q/A–8 of this section);

(4) Certain payments made by a corporation undergoing a change in ownership or control that is described in any of the following sections of the Internal Revenue Code: section 501(c) (but only if such organization is subject to an express statutory prohibition against inurement of net earnings to the benefit of any private shareholder or individual, or if the organization is described in section 501(c)(1) or section 501(c)(21)), section 501(d), or section 529, collectively referred to as *tax-exempt organizations* (described in Q/A–6 of this section); and

(5) Certain payments of reasonable compensation for services to be rendered on or after the change in ownership or control (described in Q/A–9 of this section).

(b) Deductions for payments exempt from the definition of *parachute payment* are not disallowed by section 280G, and such exempt payments are not subject to the 20-percent excise tax of section 4999. In addition, such exempt payments are not taken into account in applying the 3-times-base-amount test of Q/A–30 of this section.

Q–6: Which payments with respect to a corporation referred to in paragraph (a)(1), (a)(2), or (a)(4) of Q/A–5 of this section are exempt from the definition of *parachute payment?*

A–6: (a) The term *parachute payment* does not include—

(1) Any payment to a disqualified individual with respect to a corporation which (immediately before the change in ownership or control) was a small business corporation (as defined in section 1361(b) but without regard to section 1361(b)(1)(C) thereof),

(2) Any payment to a disqualified individual with respect to a corporation (other than a small business corporation described in paragraph (a)(1) of this A–6) if—

(i) Immediately before the change in ownership or control, no stock in such

corporation was readily tradeable on an established securities market or otherwise; and

(ii) The shareholder approval requirements described in Q/A–7 of this section are met with respect to such payment; or

(3) Any payment to a disqualified individual made by a corporation which is a tax-exempt organization (as defined in paragraph (a)(4) of Q/A–5 of this section), but only if the corporation meets the definition of a tax-exempt organization both immediately before and immediately after the change in ownership or control.

(b) For purposes of paragraph (a)(1) of this A–6, the members of an affiliated group are not treated as one corporation.

(c) The requirements of paragraph (a)(2)(i) of this A–6 are not met if a substantial portion of the assets of a corporation undergoing a change in ownership or control consists (directly or indirectly) of stock in another entity (or any ownership interest in such entity) and stock of such entity (or any ownership interest in such entity) is readily tradeable on an established securities market or otherwise. For this purpose, such stock constitutes a substantial portion of the assets of an entity if the total fair market value of the stock is equal to or exceeds one third of the total gross fair market value of all of the assets of the entity. If a corporation is a member of an affiliated group (which group is treated as one corporation under A–46 of this section), the requirements of paragraph (a)(2)(i) of this A–6 are not met if any stock in any member of such group is readily tradeable on an established securities market or otherwise.

(d) For purposes of paragraph (a)(2)(i) of this A–6, the term *stock* does not include stock described in section 1504(a)(4) if the payment does not adversely affect the redemption and liquidation rights of any shareholder owning such stock.

(e) For purposes of paragraph (a)(2)(i) of this A–6, stock is treated as readily tradeable if it is regularly quoted by brokers or dealers making a market in such stock.

(f) For purposes of paragraph (a)(2)(i) of this A–6, the term *established securities market* means an established securities market as defined in § 1.897–1(m).

(g) The following examples illustrate the application of this exemption:

Example 1. A small business corporation (within the meaning of paragraph (a)(1) of this A–6) operates two businesses. The corporation sells the assets of one of its businesses, and these assets represent a substantial portion of the assets of the corporation. Because of the sale, the corporation terminates its employment relationship with persons employed in the business the assets of which are sold. Several of these employees are highly-compensated individuals to whom the owners of the corporation make severance payments in excess of 3 times each employee's base amount. Since the corporation is a small business corporation immediately before the change in ownership or control, the payments are not parachute payments.

Example 2. Assume the same facts as in *Example 1,* except that the corporation is not a small business corporation within the meaning of paragraph (a)(1) of this A–6. If no stock in the corporation is readily tradeable on an established securities market (or otherwise) immediately before the change in ownership or control and the shareholder approval requirements described in Q/A–7 of this section are met, the payments are not parachute payments.

Example 3. Stock of Corporation S is wholly owned by Corporation P, stock in which is readily tradeable on an established securities market. The Corporation S stock equals or exceeds one third of the total gross fair market value of Corporation P, and thus, represents a substantial portion of the assets of Corporation P. Corporation S makes severance payments to several of its highly-compensated individuals that are parachute payments under section 280G and Q/A–2 of this section. Because stock in Corporation P is readily tradeable on an established securities market, the payments are not exempt from the definition of parachute payments under this A–6.

Example 4. A is a corporation described in section 501(c)(3), and accordingly, its net earnings are prohibited from inuring to the benefit of any private shareholder or individual. A transfers substantially all of its assets to another corporation resulting in a change in ownership or control. Contingent on the change in ownership or control, A makes a payment that, but for the potential application of the exemption described in A–5(a)(4), would constitute a *parachute payment.* However, one or more aspects of the transaction that constitutes the change in ownership or control causes A to fail to be described in section 501(c)(3). Accordingly, A fails to meet the definition of a *tax-exempt organization* both immediately before and immediately after the change in ownership or control, as required by this A–6. As a result, the payment made by A that was contingent on the change in ownership or control is not exempt from the definition of *parachute payment* under this A–6.

Example 5. B is a corporation described in section 501(c)(15). B does not meet the definition of a *tax-exempt organization* because section 501(c)(15) does not expressly prohibit inurement of B's net earnings to the benefit of any private shareholder or individual. Accordingly, if B has a change in ownership or control and makes a payment pays or accrues a payment that would otherwise meet the definition of a *parachute payment,* such payment is not exempt from the definition of the term *parachute payment* for purposes of this A–6.

Q–7: How are the shareholder approval requirements referred to in paragraph (a)(2)(ii) of Q/A–6 of this section met?

A–7: (a) *General rule.* The shareholder approval requirements referred to in paragraph (a)(2)(ii) of Q/A–6 of this section are met with respect to any payment if—

(1) Such payment was approved by more than 75 percent of the voting power of all outstanding stock of the corporation entitled to vote (as described in this A–7) immediately before the change in ownership or control; and

(2) There was adequate disclosure to all persons entitled to vote (as described in this A–7) of all material facts concerning all material payments which (but for Q/A–6 of this section) would be parachute payments with respect to a disqualified individual.

(b) *Voting requirements*—(1) *General rule.* The vote described in paragraph (a)(1) of this A–7 must determine the right of the disqualified individual to receive the payment, or, in the case of a payment made before the vote, the right of the disqualified individual to retain the payment. For purposes of this A–7, the vote can be no less than the full amount of the payment(s) to be made. The total payment(s) submitted for shareholder approval must be separately approved by the shareholders. Shareholder approval can be a single vote on all payments submitted to vote, including payments to more than one disqualified individual. The requirements of this paragraph (b)(1) are not satisfied if approval of the change in ownership or control is contingent on the approval of any payment that would be a parachute payment but for Q/A–6 of this section to a disqualified individual.

(2) *Special rule for vote within 3 months before change.* A vote to approve the payment does not fail to be a vote of the outstanding stock of the corporation entitled to vote immediately before the change in ownership or control merely because the determination of the shareholders entitled to vote on the payment is based on the shareholders of record at the time of any shareholder vote taken in connection with a transaction or event giving rise to such change in ownership or control and within the three-month period ending on date of the change in ownership or control, provided the disclosure requirements described in paragraph (c) of this A–7 are met.

(3) *Entity shareholder.* Approval of a payment by any shareholder that is not an individual (an entity shareholder) generally must be made by the person

authorized by the entity shareholder to approve the payment. However, if a substantial portion of the assets of an entity shareholder consists (directly or indirectly) of stock in the corporation undergoing the change in ownership or control, approval of the payment by that entity shareholder must be made by a separate vote of the persons who hold, immediately before the change in ownership or control, more than 75 percent of the voting power of the entity shareholder. The preceding sentence does not apply if the value of the stock of the corporation owned, directly or indirectly, by or for the entity shareholder does not exceed 1 percent of the total value of the outstanding stock of the corporation. Where approval of a payment by an entity shareholder must be made by a separate vote of the owners of the entity shareholder, the normal voting rights of the entity shareholder determine which owners shall vote. For purposes of this A–7, stock represents a substantial portion of the assets of an entity shareholder if the total fair market value of the stock held by the entity shareholder in the corporation undergoing the change in ownership or control is equal to or exceeds one third of the total fair market value of all of the assets of the entity shareholder.

(4) *Attribution of stock ownership.* In determining the persons who comprise the ''more than 75 percent'' group referred to in paragraph (a)(1) or (b)(3) of this A–7, stock is not counted as outstanding stock if the stock is actually owned or constructively owned under section 318(a) by or for a disqualified individual who receives (or is to receive) payments that would be parachute payments if the shareholder approval requirements described in paragraph (a) of this A–7 were not met. Likewise, stock is not counted as outstanding stock if the owner is considered under section 318(a) to own any part of the stock owned directly or indirectly by or for a disqualified individual described in the preceding sentence. In addition, if a partner authorized by a partnership to approve a payment is a disqualified individual with respect to the corporation undergoing a change in ownership or control, none of the stock held by the partnership is considered outstanding stock. However, if all persons who hold voting power in the corporation are disqualified individuals or related persons described in either of the two preceding sentences, then stock owned by such persons is counted as outstanding stock.

(5) *Disqualified individuals.* To satisfy the approval requirements of paragraph (a) of this A–7, the vote of a disqualified individual who receives (or is to receive) a payment that would be a parachute payment if the shareholder approval requirements described in paragraph (a) of this A–7 were not met is not considered in determining whether the more than 75 percent vote has been obtained for purposes of any vote under paragraph (a) of this A–7. However, if all persons who hold voting power in the corporation are disqualified individuals or related persons, then votes by such persons are considered in determining whether the more than 75% vote has been obtained.

(c) *Adequate disclosure.* To be adequate disclosure for purposes of paragraph (a)(2) of this A–7, disclosure must be full and truthful disclosure of the material facts and such additional information as is necessary to make the disclosure not materially misleading at the time the disclosure was made. Disclosure of such information must be made to every shareholder of the corporation entitled to vote under this A–7. For each disqualified individual, material facts that must be disclosed include the total amount of the payments that would be parachute payments if the shareholder approval requirements described in paragraph (a) of this A–7 were not met and a brief description of each payment (e.g., accelerated vesting of options, bonus, or salary). An omitted fact is considered a material fact if there is a substantial likelihood that a reasonable shareholder would consider it important.

(d) *Corporation without shareholders.* If a corporation does not have shareholders, the exemption described in Q/A–6(a)(2) of this section and the shareholder approval requirements described in this A–7 do not apply. For purposes of this paragraph (d), a shareholder does not include a member in an association, joint stock company, or insurance company.

(e) *Examples.* The following examples illustrate the application of this A–7:

Example 1. Corporation S has two shareholders—Corporation P, which owns 76 percent of the stock of Corporation S, and A, a disqualified individual. No stock of Corporation P or S is readily tradeable on an established securities market (or otherwise). Stock of Corporation S equals or exceeds one third of the assets of Corporation P, and thus, represents a substantial portion of the assets of Corporation P. All of the stock of Corporation S is sold to Corporation M. Contingent on the change in ownership of Corporation S, severance payments are made to the officers of Corporation S in excess of 3 times each officer's base amount. If the payments are approved by a separate vote of the persons who hold, immediately before the sale, more than 75 percent of the voting power of the outstanding stock of Corporation P and the disclosure rules of paragraph (a)(2) of this A–7 are complied with, the shareholder approval requirements of this A–7 are met, and the payments are exempt from the definition of *parachute payment* pursuant to A–6 of this section.

Example 2. Corporation M is wholly owned by Partnership P. No interest in either M or P is readily tradeable on an established securities market (or otherwise). Stock of Corporation M equals or exceeds one third of the assets of Partnership P, and thus, represents a substantial portion of the assets of Partnership P. Corporation M undergoes a change in ownership or control. Partnership P has one general partner and 200 limited partners. None of the limited partners are entitled to vote on issues involving the management of the partnership investments. If the payments that would be parachute payments if the shareholder approval requirements of this A–7 are not met are approved by the general partner and the disclosure rules of paragraph (a)(2) of this A–7 are complied with, the shareholder approval requirements of this A–7 are met, and the payments are exempt from the definition of *parachute payment* pursuant to A–6 of this section.

Example 3. Corporation A has several shareholders including X and Y, who are disqualified individuals with respect to Corporation A. No stock of Corporation A is readily tradeable on an established securities market (or otherwise). Corporation A undergoes a change in ownership or control. Contingent on the change, severance payments are payable to X and Y that are in excess of 3 times each individual's base amount. To determine whether the approval requirements of paragraph (a)(1) of this A–7 are satisfied regarding the payments to X and Y, the stock of X and Y is not considered outstanding, and X and Y are not eligible to vote.

Example 4. Assume the same facts as in *Example 3* except that after adequate disclosure (within the meaning of paragraph (a)(2) of this A–7) to all shareholders entitled to vote, 60 percent of the shareholders who are entitled to vote approve the payments to X and Y. Because more than 75 percent of the shareholders did not approve the payments to X and Y, the shareholder approval requirements of paragraph (a)(1) of this A–7 are not satisfied, and the payments are not made to X and Y.

Example 5. Assume the same facts as in *Example 3* except that disclosure of all the material facts regarding the payments to X and Y is made to two of Corporation A's shareholders, who collectively own 80 percent of Corporation A's stock entitled to vote and approve the payment. Assume further that no disclosure of the material facts regarding the payments to X and Y is made to other Corporation A shareholders who are entitled to vote within the meaning of this A–7. Because disclosure regarding the payments to X and Y is not made to all of Corporation A's shareholders who were entitled to vote, the disclosure requirements of paragraph (a)(2) of this A–7 are not met, and the payments are not exempt from the definition of *parachute payment* pursuant to Q/A–6.

Example 6. Corporation C has three shareholders—Partnership, which owns 20 percent of the stock of Corporation C; A, an individual who owns 60 percent of the stock of Corporation C; and B, an individual who owns 20 percent of Corporation C. Stock of Corporation C does not represent a substantial portion of the assets of Partnership. No interest in either Partnership or Corporation C is readily tradeable on an established securities market (or otherwise). P, a one-third partner in Partnership, is a disqualified individual with respect to Corporation C. Corporation C undergoes a change in ownership or control. Contingent on the change, a severance payment is payable to P in excess of 3 times P's base amount. To determine the persons who comprise the ''more than 75 percent group'' referred to in paragraph (a)(1) of this A–7 who must approve the payment to P, one third of the stock held by Partnership is not considered outstanding stock. If, however, P is the person authorized by Partnership to approve the payment, none of the shares of Partnership are considered outstanding stock.

Example 7. X, an employee of Corporation E, is a disqualified individual with respect to Corporation E. No stock in Corporation E is readily tradeable on an established securities market (or otherwise). X, Y, and Z are all employees and disqualified individuals with respect to Corporation E. Each individual has a base amount of $100,000. Corporation E undergoes a change in ownership or control. Contingent on the change, a severance payment of $400,000 is payable to X; $600,000 is payable to Y; and $1,000,000 is payable to Z. Corporation E provides a ballot to each Corporation E shareholder entitled to vote under paragraph(a)(1) of this A–7 listing the payments of $400,000 to X; $600,000 to Y; and $1,000,000 to Z. Next to each name and corresponding amount on the ballot, Corporation E requests approval (with a ''yes'' and ''no'' box) of each total payment to be made to each individual and states that if the payment is not approved the payment will not be made. Adequate disclosure, within the meaning of this A–7 is made to each shareholder entitled to vote under this A–7. More than 75 percent of the Corporation E shareholders who are entitled to vote under paragraph (a)(1) of this A–7, approve each payment to each individual. The shareholder approval requirements of this A–7 are met, and the payments are exempt from the definition of *parachute payment* pursuant to A–6 of this section.

Example 8. Assume the same facts as in *Example 7* except that the ballot does not request approval of each total payment to each individual separately. Instead, the ballot states that $2,000,000 in payments will be made to X, Y, and Z and requests approval of all of the $2,000,000 payments. Assuming the nature of the payments to X, Y, and Z are separately described to the shareholders entitled to vote under this A–7, the shareholder approval requirements of paragraph (a)(1) of this A–7 are met, and the payments are exempt from the definition of *parachute payment* pursuant to A–6 of this section.

Example 9. B, an employee of Corporation X, is a disqualified individual with respect to Corporation X. Stock of Corporation X is not readily tradeable on an established securities market (or otherwise). Corporation X undergoes a change in ownership or control. B's base amount is $205,000. Under B's employment agreement with Corporation X, in the event of a change in ownership or control, B's stock options will vest and B will receive a severance and bonus payment. Contingent on the change, B's stock options immediately vest with a fair market value of $500,000, $200,000 of which is contingent on the change, and B will receive a $200,000 bonus payment and a $400,000 severance payment. Corporation X distributes a ballot to every shareholder of Corporation X who immediately before the change is entitled to vote. The ballot lists the following payments to be made to B: the contingent payment of $200,000 attributable to options, a $200,000 bonus payment, and a $400,000 severance payment. The ballot requests shareholder approval of the $200,000 bonus payment to B and states that whether or not the $200,000 bonus payment is approved, B will receive $200,000 attributable to options and a $400,000 severance payment. More than 75 percent of the shareholders entitled to vote approve the $200,000 bonus payment to B. The shareholder approval requirements of this A–7 are met, and the $200,000 payment is exempt from the definition of *parachute payment* pursuant to A–6 of this section.

Q–8: Which payments under a qualified plan are exempt from the definition of *parachute payment?*

A–8: The term *parachute payment* does not include any payment to or from—

(a) A plan described in section 401(a) which includes a trust exempt from tax under section 501(a);

(b) An annuity plan described in section 403(a);

(c) A simplified employee pension (as defined in section 408(k)); or

(d) A simple retirement account (as defined in section 408(p)).

Q–9: Which payments of reasonable compensation are exempt from the definition of *parachute payment?*

A–9: Except in the case of securities violation parachute payments, the term parachute payment does not include any payment (or portion thereof) which the taxpayer establishes by clear and convincing evidence is reasonable compensation for personal services to be rendered by the disqualified individual on or after the date of the change in ownership or control. See Q/A–37 of this section for the definition and treatment of securities violation parachute payments. See Q/A–38 through Q/A–44 of this section for rules on determining amounts of reasonable compensation.

Payor of Parachute Payments

Q–10: Who may be the payor of parachute payments?

A–10: Parachute payments within the meaning of Q/A–2 of this section may be paid, directly or indirectly, by—

(a) The corporation referred to in paragraph (a)(3) of Q/A–2 of this section,

(b) A person acquiring ownership or effective control of that corporation or ownership of a substantial portion of that corporation's assets, or

(c) Any person whose relationship to such corporation or other person is such as to require attribution of stock ownership between the parties under section 318(a).

Payments in the Nature of Compensation

Q–11: What types of payments are in the nature of compensation?

A–11: (a) *General rule.* For purposes of this section, all payments—in whatever form—are payments in the nature of compensation if they arise out of an employment relationship or are associated with the performance of services. For this purpose, the performance of services includes holding oneself out as available to perform services and refraining from performing services (such as under a covenant not to compete or similar arrangement). Payments in the nature of compensation include (but are not limited to) wages and salary, bonuses, severance pay, fringe benefits, and pension benefits and other deferred compensation (including any amount characterized by the parties as interest thereon). A payment in the nature of compensation also includes cash when paid, the value of the right to receive cash, or a transfer of property. However, payments in the nature of compensation do not include attorney's fees or court costs paid or incurred in connection with the payment of any amount described in paragraphs (a)(1), (2), and (3) of Q/A–2 of this section or a reasonable rate of interest accrued on any amount during the period the parties contest whether a payment will be made.

(b) *When payment is considered to be made.* Except as otherwise provided in A–11 through Q/A–13 of this section, a payment in the nature of compensation is considered made (and is subject to the excise tax under section 4999) in the taxable year in which it is includible in the disqualified individual's gross income or, in the case of fringe benefits and other benefits excludible from income, in the taxable year the benefits are received.

(c) *Pre-payment rule.* Notwithstanding the general rule described in paragraph (b) of this A–11, for purposes of section 4999, a disqualified individual is

permitted to treat a payment as received in the year of the change in ownership or control or, if later, the first year in which the payment (or payments) is certain to be made without regard to the year in which the payment (or payments) is includible in income (or otherwise received). The payment of the excise tax for purposes of section 4999 must be based on the amount calculated for purposes of determining any excess parachute payments. However, a disqualified individual may not apply this paragraph (c) of this A–11 to a payment to be made in cash if the present value of the payment would be considered not reasonably ascertainable under section 3121(v) and § 1.3121(v)–1(e)(4) or a payment related to health benefits or coverage. The Commissioner is permitted to provide that this paragraph (c) is or is not available for certain types of payments.

(d) *Transfers of property.* Transfers of property are treated as payments for purposes of this A–11. See Q/A–12 of this section for rules on determining when such payments are considered made and the amount of such payments. See Q/A–13 of this section for special rules on transfers of statutory and nonstatutory stock options.

Q–12: If a property transfer to a disqualified individual is a payment in the nature of compensation, when is the payment considered made (or to be made), and how is the amount of the payment determined?

A–12: (a) Except as provided in this A–12 and Q/A–13 of this section, a transfer of property is considered a payment made (or to be made) in the taxable year in which the property transferred is includible in the gross income of the disqualified individual under section 83 and the regulations thereunder. Thus, in general, such a payment is considered made (or to be made) when the property is transferred (as defined in § 1.83–3(a)) to the disqualified individual and becomes substantially vested (as defined in § 1.83–3(b) and (j)) in such individual. In such case, the amount of the payment is determined under section 83 and the regulations thereunder. Thus, in general, the amount of the payment is equal to the excess of the fair market value of the transferred property (determined without regard to any lapse restriction, as defined in § 1.83–3(i)) at the time that the property becomes substantially vested, over the amount (if any) paid for the property.

(b) An election made by a disqualified individual under section 83(b) with respect to transferred property will not apply for purposes of this A–12. Thus, even if such an election is made with respect to a property transfer that is a payment in the nature of compensation, the payment is generally considered made (or to be made) when the property is transferred to and becomes substantially vested in such individual.

(c) See Q/A–13 of this section for rules on applying this A–12 to transfers of stock options.

(d) The following example illustrates the principles of this A–12:

Example. On January 1, 2006, Corporation M gives to A, a disqualified individual, a bonus of 100 shares of Corporation M stock in connection with the performance of services to Corporation M. Under the terms of the bonus arrangement A is obligated to return the Corporation M stock to Corporation M unless the earnings of Corporation M double by January 1, 2009, or there is a change in ownership or control of Corporation M before that date. A's rights in the stock are treated as substantially nonvested (within the meaning of § 1.83–3(b)) during that period because A's rights in the stock are subject to a substantial risk of forfeiture (within the meaning of § 1.83–3(c)) and are nontransferable (within the meaning of § 1.83–3(d)). On January 1, 2008, a change in ownership or control of Corporation M occurs. On that day, the fair market value of the Corporation M stock is $250 per share. Because A's rights in the Corporation M stock become substantially vested (within the meaning of § 1.83–3(b)) on that day, the payment is considered made on that day, and the amount of the payment for purposes of this section is equal to $25,000 (100 × $250). See Q/A–38 through 41 for rules relating to the reduction of the excess parachute payment by the portion of the payment which is established to be reasonable compensation for personal services actually rendered before the date of a change in ownership or control.

Q–13: How are transfers of statutory and nonstatutory stock options treated?

A–13: (a) For purposes of this section, an option (including an option to which section 421 applies) is treated as property that is transferred not later than the time at which the option becomes substantially vested (whether or not the option has a readily ascertainable fair market value as defined in § 1.83–7(b)). Thus, for purposes of this section, the vesting of such an option is treated as a payment in the nature of compensation. The value of an option with an ascertainable fair market value at the time the option vests is determined under all the facts and circumstances in the particular case. Factors relevant to such a determination include, but are not limited to: the difference between the option's exercise price and the value of the property subject to the option at the time of vesting; the probability of the value of such property increasing or decreasing; and the length of the period during which the option can be exercised. Valuation may be determined by any method prescribed by the Commissioner in published guidance for purposes of this A–13. See Q/A–33 of this section for the treatment of options the granting or vesting of which is contingent on a change in ownership or control and that do not have an ascertainable fair market value at the time of granting or vesting.

(b) Any money or other property transferred to the disqualified individual on the exercise, or as consideration on the sale or other disposition, of an option described in paragraph (a) of this A–13 after the time such option vests is not treated as a payment in the nature of compensation to the disqualified individual under Q/A–11 of this section. Nonetheless, the amount of the otherwise allowable deduction under section 162 or 212 with respect to such transfer is reduced by the amount of the payment described in paragraph (a) of this A–13 treated as an excess parachute payment.

Q–14: Are payments in the nature of compensation reduced by consideration paid by the disqualified individual?

A–14: Yes, to the extent not otherwise taken into account under Q/A–12 and Q/A–13 of this section, the amount of any payment in the nature of compensation is reduced by the amount of any money or the fair market value of any property (owned by the disqualified individual without restriction) that is (or will be) transferred by the disqualified individual in exchange for the payment. For purposes of the preceding sentence, the fair market value of property is determined as of the date the property is transferred by the disqualified individual.

Disqualified Individuals

Q–15: Who is a disqualified individual?

A–15: (a) For purposes of this section, an individual is a disqualified individual with respect to a corporation if, at any time during the *disqualified individual determination period* (as defined in Q/A–20 of this section), the individual is an employee or independent contractor of the corporation and is, with respect to the corporation—

(1) A shareholder (but see Q/A–17 of this section);

(2) An officer (see Q/A–18 of this section); or

(3) A highly-compensated individual (see Q/A–19 of this section).

(b) A director is a disqualified individual with respect to a corporation if, at any time during the *disqualified*

individual determination period (as defined in Q/A–20 of this section), the director is an employee or independent contractor and is, with respect to the corporation, either a shareholder (see Q/A–17 of this section) or a highly-compensated individual (see Q/A–19 of this section).

Q–16: Is a personal service corporation treated as an individual?

A–16: (a) Yes. For purposes of this section, a personal service corporation (as defined in section 269A(b)(1)), or a noncorporate entity that would be a personal service corporation if it were a corporation, is treated as an individual.

(b) The following example illustrates the principles of this A–16:

Example. Corporation N, a personal service corporation (as defined in section 269A(b)(1)), has a single individual as its sole shareholder and employee. Corporation N performs personal services for Corporation M. The compensation paid to Corporation N by Corporation M puts Corporation N within the group of the highly-compensated individuals of Corporation M as determined under A–19 of this section. Thus, Corporation N is treated as a highly-compensated individual with respect to Corporation M.

Q–17: Are all shareholders of a corporation considered shareholders for purposes of paragraph (a)(1) of Q/A–15 of this section?

A–17: (a) No, only an individual who owns stock of a corporation with a fair market value that exceeds 1 percent of the fair market value of the outstanding shares of all classes of the corporation's stock is treated as a disqualified individual with respect to the corporation by reason of stock ownership. An individual who owns a lesser amount of stock may, however, be a disqualified individual with respect to the corporation if such individual is an officer or highly-compensated individual with respect to the corporation. For purposes of determining the amount of stock owned by an individual, the constructive ownership rules of section 318(a) apply.

(b) The following examples illustrates the principles of this A–17:

Example 1. E, an employee of Corporation A, received options under Corporation A's Stock Option Plan. E's stock options vest three years after the date of grant. E is not an officer or highly compensated individual during the disqualified individual determination period and does not own any other Corporation A stock. Two years after the options are granted to E, all of Corporation A's stock is acquired by Corporation B. Under Corporation A's Stock Option Plan, E's options are converted to Corporation B options and the vesting schedule remains the same. To determine whether E is a disqualified individual based on E's stock ownership, the stock underlying the unvested options held by E on the date of the change in ownership or control is not considered constructively owned by E under section 318(a). Because E does not own, or constructively own, Corporation A stock with a fair market value exceeding 1 percent of the total fair market value of all of the outstanding shares of all classes of Corporation A and E is not an officer or highly-compensated individual during the disqualified individual determination period, E is not a disqualified individual within the meaning of A–15 of this section with respect to Corporation A.

Example 2. Assume the same facts as in Example 1 except that Corporation A's Stock Option Plan provides that all unvested options will vest immediately on a change in ownership or control. To determine whether E is a disqualified individual based on E's stock ownership, the stock underlying the options that vest on the change in ownership or control is considered constructively owned by E under section 318(a). If the stock constructively held by E exceeds 1 percent of the total fair market value of all of the outstanding shares of all classes of Corporation A stock, E is a disqualified individual within the meaning of this A–15 of this section with respect to Corporation A.

Example 3. Assume the same facts as in *Example 1* except that E received nonstatutory stock options that are exercisable for stock subject to a substantial risk of forfeiture under section 83. Assume further that under Corporation A's Stock Option Plan, the nonstatutory options will vest on a change in ownership or control. To determine whether E is a disqualified individual based on E's stock ownership, the stock underlying the options that vest on the change in ownership or control is not considered constructively owned by E under section 318(a) because the options are exercisable for stock subject to a substantial risk of forfeiture within the meaning of section 83. Because E does not own, or constructively own, Corporation A stock with a fair market value exceeding 1 percent of the total fair market value of all of the outstanding shares of all classes of Corporation A stock and E is not an officer or highly compensated individual during the disqualified individual determination period, E is not a disqualified individual within the meaning of A–15 of this section with respect to Corporation A.

Q–18: Who is an officer?

A–18: (a) For purposes of this section, whether an individual is an officer with respect to a corporation is determined on the basis of all the facts and circumstances in the particular case (such as the source of the individual's authority, the term for which the individual is elected or appointed, and the nature and extent of the individual's duties). Generally, the term *officer* means an administrative executive who is in regular and continued service. The term officer implies continuity of service and excludes those employed for a special and single transaction. An individual who merely has the title of officer but not the authority of an officer is not considered an officer for purposes of this section. Similarly, an individual who does not have the title of officer but has the authority of an officer is considered an officer for purposes of this section.

(b) An individual who is an officer with respect to any member of an affiliated group that is treated as one corporation pursuant to Q/A–46 of this section is treated as an officer of such one corporation.

(c) No more than 50 employees (or, if less, the greater of 3 employees, or 10 percent of the employees (rounded up to the nearest integer)) of the corporation (in the case of an affiliated group treated as one corporation, each member of the affiliated group) are treated as disqualified individuals with respect to a corporation by reason of being an officer of the corporation. For purposes of the preceding sentence, the number of employees of the corporation is the greatest number of employees the corporation has during the disqualified individual determination period (as defined in Q/A–20 of this section). If the number of officers of the corporation exceeds the number of employees who may be treated as officers under the first sentence of this paragraph (c), then the employees who are treated as officers for purposes of this section are the highest paid 50 employees (or, if less, the greater of 3 employees, or 10 percent of the employees (rounded up to the nearest integer)) of the corporation when ranked on the basis of compensation (as determined under Q/A–21 of this section) paid during the disqualified individual determination period.

Q–19: Who is a highly-compensated individual?

A–19: (a) For purposes of this section, a highly-compensated individual with respect to a corporation is any individual who is, or would be if the individual were an employee, a member of the group consisting of the lesser of the highest paid 1 percent of the employees of the corporation (rounded up to the nearest integer), or the highest paid 250 employees of the corporation, when ranked on the basis of compensation (as determined under Q/A–21 of this section) paid during the disqualified individual determination period (as defined in Q/A–20 of this section). For purposes of the preceding sentence, the number of employees of the corporation is the greatest number of employees the corporation has during the disqualified individual determination period (as defined in Q/A–20 of this section). However, no individual whose annualized

compensation during the disqualified individual determination period is less than the amount described in section 414(q)(1)(B)(i) for the year in which the change in ownership or control occurs will be treated as a highly-compensated individual.

(b) An individual who is not an employee of the corporation is not treated as a highly-compensated individual with respect to the corporation on account of compensation received for performing services (such as brokerage, legal, or investment banking services) in connection with a change in ownership or control of the corporation, if the services are performed in the ordinary course of the individual's trade or business and the individual performs similar services for a significant number of clients unrelated to the corporation.

(c) In determining the total number of employees of a corporation for purposes of this A–19, employees are not counted if they normally work less than 17½ hours per week (as defined in section 414(q)(5)(B) and the regulations thereunder) or if they normally work during not more than 6 months during any year (as defined in section 414(q)(5)(C) and the regulations thereunder). However, an employee who is not counted for purposes of the preceding sentence may still be a highly-compensated individual.

Q–20: What is the disqualified individual determination period?

A–20: The disqualified individual determination period is the twelve-month period prior to and ending on the date of the change in ownership or control of the corporation.

Q–21: How is *compensation* defined for purposes of determining who is a disqualified individual?

A–21: (a) For purposes of determining who is a disqualified individual, the term *compensation* is the compensation which was earned by the individual for services performed for the corporation with respect to which the change in ownership or control occurs (changed corporation), for a predecessor entity, or for a related entity. Such compensation is determined without regard to sections 125, 132(f)(4), 402(e)(3), and 402(h)(1)(B). Thus, for example, compensation includes elective or salary reduction contributions to a cafeteria plan, cash or deferred arrangement or tax-sheltered annuity and amounts credited under a nonqualified deferred compensation plan.

(b) For purposes of this A–21, a predecessor entity is any entity which, as a result of a merger, consolidation, purchase or acquisition of property or stock, corporate separation, or other similar business transaction transfers some or all of its employees to the changed corporation or to a related entity or to a predecessor entity of the changed corporation. The term *related entity* include—

(1) All members of a controlled group of corporations (as defined in section 414(b)) that includes the changed corporation or a predecessor entity;

(2) All trades or business (whether or not incorporated) that are under common control (as defined in section 414(c)) if such group includes the changed corporation or a predecessor entity;

(3) All members of an affiliated service group (as defined in section 414(m)) that includes the changed corporation or a predecessor entity; and

(4) Any other entities required to be aggregated with the changed corporation or a predecessor entity pursuant to section 414(o) and the regulations thereunder (except leasing organizations as defined in section 414(n)).

(c) For purposes of Q/A–18 and Q/A–19 of this section, compensation that was contingent on the change in ownership or control and that was payable in the year of the change is not treated as compensation.

Contingent on Change in Ownership or Control

Q–22: When is a payment contingent on a change in ownership or control?

A–22: (a) In general, a payment is treated as contingent on a change in ownership or control if the payment would not, in fact, have been made had no change in ownership or control occurred, even if the payment is also conditioned on the occurrence of another event. A payment generally is treated as one which would not, in fact, have been made in the absence of a change in ownership or control unless it is substantially certain, at the time of the change, that the payment would have been made whether or not the change occurred. (But see Q/A–23 of this section regarding payments under agreements entered into after a change in ownership or control.) A payment that becomes vested as a result of a change in ownership or control is not treated as a payment which was substantially certain to have been made whether or not the change occurred. For purposes of this A–22, *vested* means the payment is substantially vested within the meaning of § 1.83–3(b) and (j) or the right to the payment is not otherwise subject to a substantial risk of forfeiture.

(b)(1) For purposes of paragraph (a), a payment is treated as contingent on a change in ownership or control if—

(i) The payment is contingent on an event that is closely associated with a change in ownership or control;

(ii) A change in ownership or control actually occurs; and

(iii) The event is materially related to the change in ownership or control.

(2) For purposes of paragraph (b)(1)(i) of this A–22, a payment is treated as contingent on an event that is closely associated with a change in ownership or control unless it is substantially certain, at the time of the event, that the payment would have been made whether or not the event occurred. An event is considered closely associated with a change in ownership or control if the event is of a type often preliminary or subsequent to, or otherwise closely associated with, a change in ownership or control. For example, the following events are considered closely associated with a change in the ownership or control of a corporation: The onset of a tender offer with respect to the corporation; a substantial increase in the market price of the corporation's stock that occurs within a short period (but only if such increase occurs prior to a change in ownership or control); the cessation of the listing of the corporation's stock on an established securities market; the acquisition of more than 5 percent of the corporation's stock by a person (or more than one person acting as a group) not in control of the corporation; the voluntary or involuntary termination of the disqualified individual's employment; a significant reduction in the disqualified individual's job responsibilities; and a change in ownership or control as defined in the disqualified individual's employment agreement (or elsewhere) that does not meet the definition of a change in ownership or control described in Q/A–27, 28, or 29 of this section. Whether other events are treated as closely associated with a change in ownership or control is based on all the facts and circumstances of the particular case.

(3) For purposes of determining whether an event (as described in paragraph (b)(2) of this A–22) is materially related to a change in ownership or control, the event is presumed to be materially related to a change in ownership or control if such event occurs within the period beginning one year before and ending one year after the date of change in ownership or control. If such event occurs outside of the period beginning one year before and ending one year after the date of change in ownership or control, the event is presumed not materially related to the change in ownership or control. A payment does

not fail to be contingent on a change in ownership or control merely because it is also contingent on the occurrence of a second event (without regard to whether the second event is closely associated with or materially related to a change in ownership or control). Similarly, a payment that is treated as contingent on a change because it is contingent on a closely associated event does not fail to be treated as contingent on a change in ownership or control merely because it is also contingent on the occurrence of a second event (without regard to whether the second event is closely associated with or materially related to a change in ownership or control).

(c) A payment that would in fact have been made had no change in ownership or control occurred is treated as contingent on a change in ownership or control if the change in ownership or control (or the occurrence of an event that is closely associated and materially related to a change in ownership or control within the meaning of paragraph (b)(1) of this A–22), accelerates the time at which the payment is made. Thus, for example, if a change in ownership or control accelerates the time of payment of deferred compensation that is vested without regard to the change in ownership or control, the payment may be treated as contingent on the change. See Q/A–24 of this section regarding the portion of a payment that is so treated. See also Q/A–8 of this section regarding the exemption for certain payments under qualified plans and Q/A–40 of this section regarding the treatment of a payment as reasonable compensation.

(d) A payment is treated as contingent on a change in ownership or control even if the employment or independent contractor relationship of the disqualified individual is not terminated (voluntarily or involuntarily) as a result of the change.

(e) The following examples illustrate the principles of this A–22:

Example 1. A corporation grants a stock appreciation right to a disqualified individual, A, more than one year before a change in ownership or control. After the stock appreciation right vests and becomes exercisable, a change in ownership or control of the corporation occurs, and A exercises the right. Assuming neither the granting nor the vesting of the stock appreciation right is contingent on a change in ownership or control, the payment made on exercise is not contingent on the change in ownership or control.

Example 2. A contract between a corporation and B, a disqualified individual, provides that a payment will be made to B if the corporation undergoes a change in ownership or control and B's employment with the corporation is terminated at any time over the succeeding 5 years. Eighteen months later, a change in the ownership of the corporation occurs. Two years after the change in ownership, B's employment is terminated and the payment is made to B. Because it was not substantially certain that the corporation would have made the payment to B on B's termination of employment if there had not been a change in ownership, the payment is treated as contingent on the change in ownership under paragraph (a) of this A–22. This is true even though B's termination of employment is presumed not to be, and in fact may not be, materially related to the change in ownership or control.

Example 3. A contract between a corporation and C, a disqualified individual, provides that a payment will be made to C if C's employment is terminated at any time over the succeeding 3 years (without regard to whether or not there is a change in ownership or control). Eighteen months after the contract is entered into, a change in the ownership of the corporation occurs. Six months after the change in ownership, C's employment is terminated and the payment is made to C. Termination of employment is considered an event closely associated with a change in ownership or control. Because the termination occurred within one year after the date of the change in ownership, the termination of C's employment is presumed to be materially related to the change in ownership under paragraph (b)(3) of this A–22. If this presumption is not successfully rebutted, the payment will be treated as contingent on the change in ownership under paragraph (b) of this A–22.

Example 4. A contract between a corporation and a disqualified individual, D, provides that a payment will be made to D upon the onset of a tender offer for shares of the corporation's stock. A tender offer is made on December 1, 2008, and the payment is made to D. Although the tender offer is unsuccessful, it leads to a negotiated merger with another entity on June 1, 2009, which results in a change in the ownership of the corporation. It was not substantially certain, at the time of the onset of the tender offer, that the payment would have been made had no tender offer taken place. The onset of a tender offer is considered closely associated with a change in ownership or control. Because the tender offer occurred within one year before the date of the change in ownership of the corporation, the onset of the tender offer is presumed to be materially related to the change in ownership. If this presumption is not rebutted, the payment will be treated as contingent on the change in ownership. If no change in ownership or control had occurred, the payment would not be treated as contingent on a change in ownership or control; however, the payment still could be a parachute payment under Q/A–37 of this section if the contract violated a generally enforced securities law or regulation.

Example 5. A contract between a corporation and a disqualified individual, E, provides that a payment will be made to E if the corporation's level of product sales or profits reaches a specified level. At the time the contract was entered into, the parties had no reason to believe that such an increase in the corporation's level of product sales or profits would be preliminary or subsequent to, or otherwise closely associated with, a change in ownership or control of the corporation. Eighteen months later, a change in the ownership of the corporation occurs and within one year after the date of the change, the corporation's level of product sales or profits reaches the specified level. Under these facts and circumstances (and in the absence of contradictory evidence), the increase in product sales or profits of the corporation is not an event closely associated with the change in ownership or control of the corporation. Accordingly, even if the increase is materially related to the change, the payment will not be treated as contingent on a change in ownership or control.

Q–23: May a payment be treated as contingent on a change in ownership or control if the payment is made under an agreement entered into after the change?

A–23: (a) No., payments are not treated as contingent on a change in ownership or control if they are made (or to be made) pursuant to an agreement entered into after the change (a post-change agreement). For this purpose, an agreement that is executed after a change in ownership or control pursuant to a legally enforceable agreement that was entered into before the change is considered to have been entered into before the change. (See Q/A–9 of this section regarding the exemption for reasonable compensation for services rendered on or after a change in ownership or control.) If an individual has a right to receive a parachute payment under an agreement entered into prior to a change in ownership or control (pre-change agreement) and gives up that right as bargained-for consideration for benefits under a post-change agreement, the agreement is treated as a post-change agreement only to the extent the value of the payments under the agreement exceed the value of the payments under the pre-change agreement. To the extent payments under the agreement have the same value as the parachute payments under the pre-change agreement, such payments retain their character as parachute payments subject to this section.

(b) The following examples illustrate the principles of this A–23:

Example 1. Assume that a disqualified individual is an employee of a corporation. A change in ownership or control of the corporation occurs, and thereafter the individual enters into an employment agreement with the acquiring company. Because the agreement is entered into after the change in ownership or control occurs, payments to be made under the agreement are not treated as contingent on the change.

Example 2. Assume the same facts as in *Example 1,* except that the agreement

between the disqualified individual and the acquiring company is executed after the change in ownership or control, pursuant to a legally enforceable agreement entered into before the change. Payments to be made under the agreement may be treated as contingent on the change in ownership or control pursuant to Q/A–22 of this section. However, see Q/A–9 of this section regarding the exemption from the definition of parachute payment for certain amounts of reasonable compensation.

Example 3. Assume the same facts as in *Example 1* except that prior to the change in ownership or control, the individual and corporation enter into an agreement under which the individual will receive parachute payments in the event of a change in ownership or control of the corporation. After the change, the individual agrees to give up the right to parachute payments under the pre-change agreement in exchange for compensation under a new agreement with the acquiring corporation. Because the individual gave up the right to parachute payments under the pre-change agreement in exchange for other payments under the post-change agreement, payments in an amount equal to the parachute payments under the pre-change agreement are treated as contingent on the change in ownership or control under this A–23. Because the post-change agreement was entered into after the change, payments in excess of this amount are not treated as parachute payments.

Q–24: If a payment is treated as contingent on a change in ownership or control, is the full amount of the payment so treated?

A–24: (a)(1) *General rule.* Yes, if the payment is a transfer of property, the amount of the payment is determined under Q/A–12 or Q/A–13 of this section. For all other payments, the amount of the payment is determined under Q/A–11 of this section. However, in certain circumstances, described in paragraphs (b) and (c) of this A–24, only a portion of the payment is treated as contingent on the change. Paragraph (b) of this A–24 applies to a payment that is vested, without regard to the change in ownership or control, and is treated as contingent on the change in ownership or control because the change accelerates the time at which the payment is made. Paragraph (c) of this A–24 applies to a payment that becomes vested as a result of the change in ownership or control if, without regard to the change in ownership or control, the payment was contingent only on the continued performance of services for the corporation for a specified period of time and if the payment is attributable, at least in part, to services performed before the date the payment becomes vested. For purposes of this A–24, for the definition of vested see Q/A–22(a).

(2) *Reduction by reasonable compensation.* The amount of a payment under paragraph (a)(1) of this A–24 is reduced by any portion of such payment that the taxpayer establishes by clear and convincing evidence is reasonable compensation for personal services rendered by the disqualified individual on or after the date of the change of control. See Q/A–9 and Q/A–38 through 44 of this section for rules concerning reasonable compensation. The portion of an amount treated as contingent under paragraph (b) or (c) of this A–24 may not be reduced by reasonable compensation.

(b) *Vested payments.* This paragraph (b) applies if a payment is vested, without regard to the change in ownership or control, and is treated as contingent on the change in ownership or control because the change accelerates the time at which the payment is made. In such case, the portion of the payment, if any, that is treated as contingent on the change in ownership or control is the amount by which the amount of the accelerated payment exceeds the present value of the payment absent the acceleration. If the value of such a payment absent the acceleration is not reasonably ascertainable, and the acceleration of the payment does not significantly increase the present value of the payment absent the acceleration, the present value of the payment absent the acceleration is treated as equal to the amount of the accelerated payment. If the value of the payment absent the acceleration is not reasonably ascertainable, but the acceleration significantly increases the present value of the payment, the future value of such payment is treated as equal to the amount of the accelerated payment. For rules on determining present value, see paragraph (e) of this A–24, Q/A–32, and Q/A–33 of this section.

(c)(1) *Nonvested payments.* This paragraph (c) applies to a payment that becomes vested as a result of the change in ownership or control to the extent that—

(i) Without regard to the change in ownership or control, the payment was contingent only on the continued performance of services for the corporation for a specified period of time; and

(ii) The payment is attributable, at least in part, to the performance of services before the date the payment is made or becomes certain to be made.

(2) The portion of the payment subject to paragraph (c) of this A–24 that is treated as contingent on the change in ownership or control is the lesser of—

(i) The amount of the accelerated payment; or

(ii) The amount described in paragraph (b) of this A–24, plus an amount, as determined in paragraph (c)(4) of this A–24, to reflect the lapse of the obligation to continue to perform services.

(3) For purposes of this paragraph (c) of this A–24, the acceleration of the vesting of a stock option or the lapse of a restriction on restricted stock is considered to significantly increase the value of a payment.

(4) The amount reflecting the lapse of the obligation to continue to perform services (described in paragraph (c)(2)(ii) of this A–24) is 1 percent of the amount of the accelerated payment multiplied by the number of full months between the date that the individual's right to receive the payment is vested and the date that, absent the acceleration, the payment would have been vested. This paragraph (c)(4) applies to the accelerated vesting of a payment in the nature of compensation even if the time at which the payment is made is not accelerated.

(d) *Application of this A–24 to certain payments.*—(1) *Benefits under a nonqualified deferred compensation plan.* In the case of a payment of benefits under a nonqualified deferred compensation plan, paragraph (b) of this A–24 applies to the extent benefits under the plan are vested without regard to the change in ownership or control. Paragraph (c) of this A–24 applies to the extent benefits under the plan become vested as a result of the change in ownership or control and are attributable, at least in part, to the performance of services prior to vesting. Any other payment of benefits under a nonqualified deferred compensation plan is a payment in the nature of compensation subject to the general rule of paragraph (a) of this A–24 and the rules in Q/A–11 of this section.

(2) *Employment agreements.* The general rule of paragraph (a) of this A–24 applies to the payment of amounts due under an employment agreement on a termination of employment or a change in ownership or control that otherwise would be attributable to the performance of services (or refraining from the performance of services) during any period that begins after the date of termination of employment or change in ownership or control, as applicable. For purposes of this paragraph (d)(2) of this A–24, an employment agreement means an agreement between an employee or independent contractor and employer or service recipient which describes, among other things, the amount of compensation or remuneration payable to the employee or independent

contractor. See Q/A–42(b) and 44 of this section for the treatment of the remaining amounts of salary under an employment agreement.

(3) *Vesting due to an event other than services.* Neither paragraph (b) nor (c) of this A–24 applies to a payment if (without regard to the change in ownership or control) vesting of the payment depends on an event other than the performance of services, such as the attainment of a performance goal, and the event does not occur prior to the change in ownership or control. In such circumstances, the full amount of the accelerated payment is treated as contingent on the change in ownership or control under paragraph (a) of this A–24. However, see Q/A–39 of this section for rules relating to the reduction of the excess parachute payment by the portion of the payment which is established to be reasonable compensation for personal services actually rendered before the date of a change in ownership or control.

(e) *Present value.* For purposes of this A–24, the present value of a payment is determined as of the date on which the accelerated payment is made.

(f) *Examples.* The following examples illustrate the principles of this A–24:

Example 1. (i) Corporation maintains a qualified plan and a nonqualified supplemental retirement plan (SERP) for its executives. Benefits under the SERP are not paid to participants until retirement. E, a disqualified individual with respect to Corporation, has a vested account balance of $500,000 under the SERP. A change in ownership or control of Corporation occurs. The SERP provides that in the event of a change in ownership or control, all vested accounts will be paid to SERP participants.

(ii) Because E was vested in $500,000 of benefits under the SERP prior to the change in ownership or control and the change merely accelerated the time at which the payment was made to E, only a portion of the payment, as determined under paragraph (b) of this A–24, is treated as contingent on the change. Thus, the portion of the payment that is treated as contingent on the change is the amount by which the amount of the accelerated payment ($500,000) exceeds the present value of the payment absent the acceleration.

(iii) Assume that instead of having a vested account balance of $500,000 on the date of the change in ownership or control, E will vest in his account balance of $500,000 in 2 years if E continues to perform services for the next 2 years. Assume further that the SERP provides that all unvested SERP benefits vest immediately on a change in ownership or control and are paid to the participants. Because the vesting of the SERP payment, without regard to the change, depends only on the performance of services for a specified period of time and the payment is attributable, in part, to the performance of services before the change in ownership or control, only a portion of the $500,000 payment, as determined under paragraph (c) of this A–24, is treated as contingent on the change. The portion of the payment that is treated as contingent on the change is the lesser of the amount of the accelerated payment or the amount by which the accelerated payment exceeds the present value of the payment absent the acceleration, plus an amount to reflect the lapse of the obligation to continue to perform services.

(iv) Assume further that under the SERP E's vested account balance of $500,000 will be paid to E on the change in ownership or control and an additional $70,000 will be credited to E's account. Because the $500,000 was vested without regard to the change in ownership or control, paragraph (b) of this A–24 applies to the $500,000 payment. Because the $70,000 is not vested, without regard to the change, and is not attributable to the performance of services prior to the change, the entire $70,000 payment is contingent on the change in ownership or control under paragraph (a) of this A–24.

Example 2. As a result of a change in the effective control of a corporation, a disqualified individual with respect to the corporation, D, receives accelerated payment of D's vested account balance in a nonqualified deferred compensation account plan. Actual interest and other earnings on the plan assets are credited to each account as earned before distribution. Investment of the plan assets is not restricted in such a manner as would prevent the earning of a market rate of return on the plan assets. The date on which D would have received D's vested account balance absent the change in ownership or control is uncertain, and the rate of earnings on the plan assets is not fixed. Thus, the amount of the payment absent the acceleration is not reasonably ascertainable. Under these facts, acceleration of the payment does not significantly increase the present value of the payment absent the acceleration, and the present value of the payment absent the acceleration is treated as equal to the amount of the accelerated payment. Accordingly, no portion of the payment is treated as contingent on the change.

Example 3. (i) On January 15, 2006, a corporation and a disqualified individual, F, enter into a contract providing for a retention bonus of $500,000 to be paid to F on January 15, 2011. The payment of the bonus will be forfeited by F if F does not remain employed by the corporation for the entire 5-year period. However, the contract provides that the full amount of the payment will be made immediately on a change in ownership or control of the corporation during the 5-year period. On January 15, 2009, a change in ownership or control of the corporation occurs and the full amount of the payment ($500,000) is made on that date to F. Under these facts, the payment of $500,000 was contingent only on F's performance of services for a specified period and is attributable, in part, to the performance of services before the change in ownership or control. Therefore, only a portion of the payment is treated as contingent on the change. The portion of the payment that is treated as contingent on the change is the amount by which the amount of the accelerated payment (i.e., $500,000, the amount paid to the individual because of the change in ownership) exceeds the present value of the payment that was expected to have been made absent the acceleration (i.e., $406,838, the present value on January 15, 2009, of a $500,000 payment on January 15, 2011), plus $115,000 (1% × 23 months × $500,000) which is the amount reflecting the lapse of the obligation to continue to perform services. Accordingly, the amount of the payment treated as contingent on the change in ownership or control is $208,162, the sum of $93,162 ($500,000 − $406,838) − $115,000). This result is not changed if F actually remains employed until the end of the 5-year period.

(ii) Assume that the contract provides that the retention bonus will vest on a change in ownership or control, but will not be paid until January 15, 2011 (the original date in the contract). Because the payment of $500,000 was contingent only on F's performance of services for a specified period and is attributable, in part, to the performance of services before the change in ownership or control, only a portion of the $500,000 payment is treated as contingent on the change. Because there is no accelerated payment, the portion of the payment treated as contingent on the change is an amount reflecting the lapse of the obligation to continue to perform services which is $115,000 (1% × 23 months × $500,000).

Example 4. (i) On January 15, 2006, a corporation gives to a disqualified individual, in connection with her performance of services to the corporation, a bonus of 1,000 shares of the corporation's stock. Under the terms of the bonus arrangement, the individual is obligated to return the stock to the corporation if she terminates her employment for any reason prior to January 15, 2011. However, if there is a change in the ownership or effective control of the corporation prior to January 15, 2011, she ceases to be obligated to return the stock. The individual's rights in the stock are treated as substantially nonvested (within the meaning of § 1.83–3(b) and (j)) during that period. On January 15, 2008, a change in the ownership of the corporation occurs. On that day, the fair market value of the stock is $500,000.

(ii) Under these facts, the payment was contingent only on performance of services for a specified period and is attributable, in part, to the performance of services before the change in ownership or control. Thus, only a portion of the payment is treated as contingent on the change in ownership or control. The portion of the payment that is treated as contingent on the change is the amount by which the present value of the accelerated payment on January 15, 2009 ($500,000), exceeds the present value of the payment that was expected to have been made on January 15, 2011, plus an amount reflecting the lapse of the obligation to continue to perform services. At the time of the change, it cannot be reasonably ascertained what the value of the stock would been on January 15, 2011. The acceleration of the lapse of a restriction on stock is treated as significantly increasing the

value of the payment. Therefore, the value of such stock on January 15, 2011, is deemed to be $500,000, the amount of the accelerated payment. The present value on January 15, 2009, of a $500,000 payment to be made on January 15, 2011, is $406,838. Thus, the portion of the payment treated as contingent on the change is $208,162, the sum of $93,162 ($500,000 − $406,838), plus $115,000 [1% × 23 months × $500,000], the amount reflecting the lapse of the obligation to continue to perform services.

Example 5. (i) On January 15, 2006, a corporation grants to a disqualified individual nonqualified stock options to purchase 30,000 shares of the corporation's stock. The options do not have a readily ascertainable fair market value at the time of grant. The options will be forfeited by the individual if he fails to perform personal services for the corporation until January 15, 2009. The options will, however, vest in the individual at an earlier date if there is a change in ownership or control of the corporation. On January 16, 2008, a change in the ownership of the corporation occurs and the options become vested in the individual. On January 16, 2008, the options have an ascertainable fair market value of $600,000.

(ii) The payment of the options to purchase 30,000 shares was contingent only on performance of services for the corporation until January 15, 2009, and is attributable, in part, to the performance of services before the change in ownership or control. Therefore, only a portion of the payment is treated as contingent on the change. The portion of the payment that is treated as contingent on the change is the amount by which the accelerated payment on January 16, 2008 ($600,000) exceeds the present value on January 16, 2008, of the payment that was expected to have been made on January 15, 2009, absent the acceleration, plus an amount reflecting the lapse of the obligation to continue to perform services. At the time of the change, it cannot be reasonably ascertained what the value of the options would have been on January 15, 2009. The acceleration of vesting in the options is treated as significantly increasing the value of the payment. Therefore, the value of such options on January 15, 2009, is deemed to be $600,000, the amount of the accelerated payment. The present value on January 16, 2008 of a $600,000 payment to be made on January 15, 2009, is $549,964.13. Thus, the portion of the payment treated as contingent on the change is $116,035.87, the sum of $50,035.87 ($600,000 − $549,964.13), plus an amount reflecting the lapse of the obligation to continue to perform services which is $66,000 (1% × 11 months × $600,000).

Example 6. (i) The facts are the same as in Example 5, except that the options become vested periodically (absent a change in ownership of control), with one-third of the options vesting on January 15, 2007, 2008, and 2009, respectively. Thus, options to purchase 20,000 shares vest independently of the January 16, 2008, change in ownership and the options to purchase the remaining 10,000 shares vest as a result of the change.

(ii) The payment of the options to purchase 10,000 shares was contingent only on performance of services for the corporation until January 15, 2009, and is attributable, in part, to the performance of services before the change in ownership or control. Therefore, only a portion of the payment is treated as contingent on the change. The portion of the payment that is treated as contingent on the change is the amount by which the accelerated payment on January 16, 2008 ($200,000) exceeds the present value on January 16, 2008, of the payment that was expected to have been made on January 15, 2009, absent the acceleration, plus an amount reflecting the lapse of the obligation to perform services. At the time of the change, it cannot be reasonably ascertained what the value of the options would have been on January 15, 2009. The acceleration of vesting in the options is treated as significantly increasing the value of the payment. Therefore, the value of such options on January 15, 2009, is deemed to be $200,000, the amount of the accelerated payment. The present value on January 16, 2008, of a $200,000 payment to be made on January 15, 2009, is $183,328.38. Thus, the portion of the payment treated as contingent on the change is $38,671.62, the sum of $16,671.62 ($200,000 − $183,328.38), plus an amount reflecting the lapse of the obligation to continue to perform services which is $22,000 (1% × 11 months × $200,000).

Example 7. Assume the same facts as in *Example 5*, except that the option agreement provides that the options will vest either on the corporation's level of profits reaching a specified level, or if earlier, on the date on which there is a change in ownership or control of the corporation. The corporation's level of profits do not reach the specified level prior to January 16, 2008. In such case, the full amount of the payment, $600,000, is treated as contingent on the change because it was not contingent only on performance of services for the corporation for a specified period. See Q/A–39 of this section for rules relating to the reduction of the excess parachute payment by the portion of the payment which is established to be reasonable compensation for personal services actually rendered before the date of a change in ownership or control.

Example 8. On January 1, 2002, E, a disqualified individual with respect to Corporation X, enters into an employment agreement with Corporation X under which E will be paid wages of $200,000 each year during the 5-year employment agreement. The employment agreement provides that if a change in ownership or control of Corporation X occurs, E will be paid the present value of the remaining salary under the employment agreement. On January 1, 2003, a change in ownership or control of Corporation X occurs, E is terminated, and E receives a payment of the present value of $200,000 for each of the 4 years remaining under the employment agreement. Because the payment represents future salary under an employment agreement (i.e., amounts otherwise attributable to the performance of services for periods that begin after the termination of employment), the general rule of paragraph (a) of this A–24 applies to the payment. See Q/A–42(c) and 44 of this section for the treatment of the remaining payments under an employment agreement.

Presumption That Payment Is Contingent on Change

Q–25: Is there a presumption that certain payments are contingent on a change in ownership or control?

A–25: Yes, for purposes of this section, any payment is presumed to be contingent on such change unless the contrary is established by clear and convincing evidence if the payment is made pursuant to—

(a) An agreement entered into within one year before the date of a change in ownership or control; or

(b) An amendment that modifies a previous agreement in any significant respect, if the amendment is made within one year before the date of a change in ownership or control. In the case of an amendment described in paragraph (b) of this A–25, only the portion of any payment that exceeds the amount of such payment that would have been made in the absence of the amendment is presumed, by reason of the amendment, to be contingent on the change in ownership or control.

Q–26: How may the presumption described in Q/A–25 of this section be rebutted?

A–26: (a) To rebut the presumption described in Q/A–25 of this section, the taxpayer must establish by clear and convincing evidence that the payment is not contingent on the change in ownership or control. Whether the payment is contingent on such change is determined on the basis of all the facts and circumstances of the particular case. Factors relevant to such a determination include, but are not limited to, the content of the agreement or amendment and the circumstances surrounding the execution of the agreement or amendment, such as whether it was entered into at a time when a takeover attempt had commenced and the degree of likelihood that a change in ownership or control would actually occur. However, even if the presumption is rebutted with respect to an agreement, some or all of the payments under the agreement may still be contingent on the change in ownership or control pursuant to Q/A–22 of this section.

(b) In the case of an agreement described in paragraph (a) of Q/A–25 of this section, clear and convincing evidence that the agreement is one of the three following types will generally rebut the presumption that payments under the agreement are contingent on the change in ownership or control—

(1) A *nondiscriminatory employee plan or program* as defined in paragraph (c) of this A–26;

(2) A contract between a corporation and an individual that replaces a prior

contract entered into by the same parties more than one year before the change in ownership or control, if the new contract does not provide for increased payments (apart from normal increases attributable to increased responsibilities or cost of living adjustments), accelerate the payment of amounts due at a future time, or modify (to the individual's benefit) the terms or conditions under which payments will be made; or

(3) A contract between a corporation and an individual who did not perform services for the corporation prior to the one year period before the change in ownership or control occurs, if the contract does not provide for payments that are significantly different in amount, timing, terms, or conditions from those provided under contracts entered into by the corporation (other than contracts that themselves were entered into within one year before the change in ownership or control and in contemplation of the change) with individuals performing comparable services.

(c) For purposes of this section, the term *nondiscriminatory employee plan or program* means: a group term life insurance plan that meets the requirements of section 79(d); a self insured medical reimbursement plan that meets the requirements of section 105(h); a cafeteria plan (within the meaning of section 125); an educational assistance program (within the meaning of section 127); a dependent care assistance program (within the meaning of section 129); or a no-additional-cost service (within the meaning of section 132(b)) or qualified employee discount (within the meaning of section 132(c)); and an adoption assistance program (within the meaning of section 137). Payments under certain other plans are exempt from the definition of *parachute payment* under Q/A–8 of this section.

(d) The following examples illustrate the application of the presumption:

Example 1. A corporation and a disqualified individual who is an employee of the corporation enter into an employment contract. The contract replaces a prior contract entered into by the same parties more than one year before the change and the new contract does not provide for any increased payments other than a cost of living adjustment, does not accelerate the payment of amounts due at a future time, and does not modify (to the individual's benefit) the terms or conditions under which payments will be made. Clear and convincing evidence of these facts rebuts the presumption described in A–25 of this section. However, payments under the contract still may be contingent on the change in ownership or control pursuant to Q/A–22 of this section.

Example 2. Assume the same facts as in *Example 1*, except that the contract is entered into after a tender offer for the corporation's stock had commenced and it was likely that a change in ownership would occur and the contract provides for a substantial bonus payment to the individual upon his signing the contract. The individual has performed services for the corporation for many years, but previous employment contracts between the corporation and the individual did not provide for a similar signing bonus. One month after the contract is entered into, a change in the ownership of the corporation occurs. All payments under the contract are presumed to be contingent on the change in ownership even though the bonus payment would have been legally required even if no change had occurred. Clear and convincing evidence of these facts rebuts the presumption described in A–25 of this section with respect to all of the payments under the contract with the exception of the bonus payment (which is treated as contingent on the change). However, payments other than the bonus under the contract still may be contingent on the change in ownership or control pursuant to Q/A–22 of this section.

Example 3. A corporation and a disqualified individual, who is an employee of the corporation, enter into an employment contract within one year of a change in ownership of the corporation. Under the contract, in the event of a change in ownership or control and subsequent termination of employment, certain payments will be made to the individual. A change in ownership occurs, but the individual is not terminated until 2 years after the change. If clear and convincing evidence does not rebut the presumption described in A–25 of this section, because the payment is made pursuant to an agreement entered into within one year of the date of the change in ownership, the payment is presumed contingent on the change under A–25 of this section. This is true even though A's termination of employment is presumed not to be materially related to the change in ownership or control under Q/A–22 of this section.

Change in Ownership or Control

Q–27: When does a change in the ownership of a corporation occur?

A–27: (a) For purposes of this section, a change in the ownership or control of a corporation occurs on the date that any one person, or more than one person acting as a group, acquires ownership of stock of the corporation that, together with stock held by such person or group, owns more than 50 percent of the total fair market value or total voting power of the stock of such corporation. However, if any one person, or more than one person acting as a group, is considered to own more than 50 percent of the total fair market value or total voting power of the stock of a corporation, the acquisition of additional stock by the same person or persons is not considered to cause a change in the ownership of the corporation (or to cause a change in the effective control of the corporation (within the meaning of Q/A–28 of this section)). An increase in the percentage of stock owned by any one person, or persons acting as a group, as a result of a transaction in which the corporation acquires its stock in exchange for property will be treated as an acquisition of stock for purposes of this section.

(b) For purposes of paragraph (a) of this A–27, persons will not be considered to be acting as a group merely because they happen to purchase or own stock of the same corporation at the same time, or as a result of the same public offering. However, persons will be considered to be acting as a group if they are owners of an entity that enters into a merger, consolidation, purchase or acquisition of stock, or similar business transaction with the corporation. If a person, including an entity shareholder, owns stock in both entities that enter into a merger, consolidation, purchase or acquisition of stock, or similar transaction, such shareholder is considered to be acting as a group with other shareholders in an entity only to the extent of his ownership in that entity prior to the transaction giving rise to the change and not with respect to his ownership interest in the other entity.

(c) For purposes of this A–27, section 318(a) applies to determine stock ownership.

(d) The following examples illustrate the principles of this A–27:

Example 1. Corporation M has owned stock with a fair market value equal to 19 percent of the value of the stock of Corporation N (an otherwise unrelated corporation) for many years prior to 2006. Corporation M acquires additional stock with a fair market value equal to 15 percent of the value of the stock of Corporation N on January 1, 2006, and an additional 18 percent on February 21, 2007. As of February 21, 2007, Corporation M has acquired stock with a fair market value greater than 50 percent of the value of the stock of Corporation N. Thus, a change in the ownership of Corporation N is considered to occur on February 21, 2007 (assuming that Corporation M did not have effective control of Corporation N immediately prior to the acquisition on that date).

Example 2. All of the corporation's stock is owned by the founders of the corporation. The board of directors of the corporation decides to offer shares of the corporation to the public. After the public offering, the founders of the corporation own a total of 40 percent of the corporation's stock, and members of the public own 60 percent. If no one person (or more than one person acting as a group) owns more than 50 percent of the corporation's stock (by value or voting power) after the public offering, there is no change in the ownership of the corporation.

Example 3. Corporation P merges into Corporation O (a previously unrelated corporation). In the merger, the shareholders of Corporation P receive Corporation O stock in exchange for their Corporation P stock. Immediately after the merger, the former shareholders of Corporation P own stock with a fair market value equal to 60 percent of the value of the stock of Corporation O, and the former shareholders of Corporation O own stock with a fair market value equal to 40 percent of the value of the stock of Corporation O. The former shareholders of Corporation P will be treated as acting as a group in their acquisition of Corporation O stock. Thus, a change in the ownership of Corporation O occurs on the date of the merger.

Example 4. Assume the same facts as in *Example 3* except that immediately after the change, the former shareholders of Corporation P own stock with a fair market value of 51 percent of the value of Corporation O stock and the former shareholders of Corporation O own stock with a fair market value equal to 49 percent of the value of Corporation O stock. Assume further that prior to the merger several Corporation P shareholders also owned Corporation O stock (overlapping shareholders) with a fair market value of 5 percent of the value of Corporation O stock. The overlapping shareholders consist of Mutual Company A Growth Fund, which prior to the transaction owns 3 percent of the value of Corporation O stock, Mutual Company A Income Fund, which prior to the transaction owns 1 percent of the value of Corporation O stock, and B, an individual who prior to the transaction owns 1 percent of the value of Corporation O stock. Growth Fund and Income Fund are treated as separate shareholders with respect to their ownership interests in Corporation O and Corporation P. The overlapping shareholders are not treated as acting as a group with the Corporation P shareholders with respect to the Corporation O stock each overlapping shareholder held before the transaction. Instead, the overlapping shareholders are treated as acting as a group separately with respect to Corporation O and Corporation P. Because the former shareholders of Corporation O are treated as acting as a group with respect to other Corporation O shareholders only to the extent of their ownership interest in Corporation O and not with respect to their ownership interest in Corporation P, a change in the ownership of Corporation O occurs on the date of the merger.

Example 5. A, an individual, owns stock with a fair market value equal to 20 percent of the value of the stock of Corporation Q. On January 1, 2007, Corporation Q acquires in a redemption for cash all of the stock held by shareholders other than A. Thus, A is left as the sole shareholder of Corporation O. A change in ownership of Corporation O is considered to occur on January 1, 2007 (assuming that A did not have effective control of Corporation Q immediately prior to the redemption).

Example 6. Assume the same facts as in *Example 5,* except that A owns stock with a fair market value equal to 51 percent of the value of all the stock of Corporation Q immediately prior to the redemption. There is no change in the ownership of Corporation Q as a result of the redemption.

Q–28: When does a change in the effective control of a corporation occur?

A–28: (a) For purposes of this section, a change in the effective control of a corporation is presumed to occur on the date that either—

(1) Any one person, or more than one person acting as a group, acquires (or has acquired during the 12-month period ending on the date of the most recent acquisition by such person or persons) ownership of stock of the corporation possessing 20 percent or more of the total voting power of the stock of such corporation; or

(2) A majority of members of the corporation's board of directors is replaced during any 12-month period by directors whose appointment or election is not endorsed by a majority of the members of the corporation's board of directors prior to the date of the appointment or election.

(b) The presumption of paragraph (a) of this A–28 may be rebutted by establishing that such acquisition or acquisitions of the corporation's stock, or such replacement of the majority of the members of the corporation's board of directors, does not transfer the power to control (directly or indirectly) the management and policies of the corporation from any one person (or more than one person acting as a group) to another person (or group). For purposes of this section, in the absence of an event described in paragraph (a)(1) or (2) of this A–28, a change in the effective control of a corporation is presumed not to have occurred.

(c) If any one person, or more than one person acting as a group, is considered to effectively control a corporation (within the meaning of this A–28), the acquisition of additional control of the corporation by the same person or persons is not considered to cause a change in the effective control of the corporation (or to cause a change in the ownership of the corporation within the meaning of Q/A–27 of this section).

(d) For purposes of this A–28, persons will not be considered to be acting as a group merely because they happen to purchase or own stock of the same corporation at the same time, or as a result of the same public offering. However, persons will be considered to be acting as a group if they are owners of an entity that enters into a merger, consolidation, purchase or acquisition of stock, or similar business transaction with the corporation. If a person, including an entity shareholder, owns stock in both entities that enter into a merger, consolidation, purchase or acquisition of stock, or similar transaction, such shareholder is considered to be acting as a group with other shareholders in an entity only to the extent of his ownership in that entity prior to the transaction giving rise to the change and not with respect to his ownership interest in the other entity.

(e) Section 318(a) applies to determine stock ownership for purposes of this A–28.

(f) The following examples illustrate the principles of this A–28:

Example 1. Shareholder A acquired the following percentages of the voting stock of Corporation M (an otherwise unrelated corporation) on the following dates: 16 percent on January 1, 2005; 10 percent on January 10, 2006; 8 percent on February 10, 2006; 11 percent on March 1, 2007; and 8 percent on March 10, 2007. Thus, on March 10, 2007, A owns a total of 53 percent of M's voting stock. Because A did not acquire 20 percent or more of M's voting stock during any 12-month period, there is no presumption of a change in effective control pursuant to paragraph (a)(1) of this A–28. In addition, under these facts there is a presumption that no change in the effective control of Corporation M occurred. If this presumption is not rebutted (and thus no change in effective control of Corporation M is treated as occurring prior to March 10, 2007), a change in the ownership of Corporation M is treated as having occurred on March 10, 2007 (pursuant to Q/A–27 of this section) because A had acquired more than 50 percent of Corporation M's voting stock as of that date.

Example 2. A minority group of shareholders of a corporation opposes the practices and policies of the corporation's current board of directors. A proxy contest ensues. The minority group presents its own slate of candidates for the board at the next annual meeting of the corporation's shareholders, and candidates of the minority group are elected to replace a majority of the current members of the board. A change in the effective control of the corporation is presumed to have occurred on the date the election of the new board of directors becomes effective.

Q–29: When does a change in the ownership of a substantial portion of a corporation's assets occur?

A–29: (a) For purposes of this section, a change in the ownership of a substantial portion of a corporation's assets occurs on the date that any one person, or more than one person acting as a group, acquires (or has acquired during the 12-month period ending on the date of the most recent acquisition by such person or persons) assets from the corporation that have a total gross fair market value equal to or more than one third of the total gross fair market value of all of the assets of the

corporation immediately prior to such acquisition or acquisitions.

(b) A transfer of assets by a corporation is not treated as a change in the ownership of such assets if the assets are transferred to—

(1) A shareholder of the corporation (immediately before the asset transfer) in exchange for or with respect to its stock;

(2) An entity, 50 percent or more of the total value or voting power of which is owned, directly or indirectly, by the corporation;

(3) A person, or more than one person acting as a group, that owns, directly or indirectly, 50 percent or more of the total value or voting power of all the outstanding stock of the corporation; or

(4) An entity, at least 50 percent of the total value or voting power is owned, directly or indirectly, by a person described in paragraph (b)(3) of this A–29.

(c) For purposes of paragraph (b) and except as otherwise provided, a person's status is determined immediately after the transfer of the assets. For example, a transfer of assets pursuant to a complete liquidation of a corporation, a redemption of a shareholder's interest, or a transfer to a majority-owned subsidiary of the corporation is not treated as a change in the ownership of the assets of the transferor corporation.

(d) For purposes of this A–29, persons will not be considered to be acting as a group merely because they happen to purchase or own stock of the same corporation at the same time, or as a result of the same public offering. However, persons will be considered to be acting as a group if they are owners of an entity that enters into a merger, consolidation, purchase or acquisition of stock, or similar business transaction with the corporation. If a person, including an entity shareholder, owns stock in both entities that enter into a merger, consolidation, purchase or acquisition of stock, or similar transaction, such shareholder is considered to be acting as a group with other shareholders in an entity only to the extent of his ownership in that entity prior to the transaction giving rise to the change and not with respect to his ownership interest in the other entity.

(e) For purposes of this A–29, section 318(a) applies in determining stock ownership.

(f) The following examples illustrate the principles of this A–29:

Example 1. Corporation M acquires assets having a gross fair market value of $500,000 from Corporation N (an unrelated corporation) on January 1, 2006. The total gross fair market value of Corporation N's assets immediately prior to the acquisition was $3 million. Since the value of the assets acquired by Corporation M is less than one-third of the fair market value of Corporation N's total assets immediately prior to the acquisition, the acquisition does not represent a change in the ownership of a substantial portion of Corporation N's assets.

Example 2. Assume the same facts as in *Example 1.* Also assume that on November 1, 2006, Corporation M acquires from Corporation N additional assets having a fair market value of $700,000. Thus, Corporation M has acquired from Corporation N assets worth a total of $1.2 million during the 12-month period ending on November 1, 2006. Since $1.2 million is more than one-third of the total gross fair market value of all of Corporation N's assets immediately prior to the earlier of these acquisitions ($3 million), a change in the ownership of a substantial portion of Corporation N's assets is considered to have occurred on November 1, 2006.

Example 3. All of the assets of Corporation P are transferred to Corporation O (an unrelated corporation). In exchange, the shareholders of Corporation P receive Corporation O stock. Immediately after the transfer, the former shareholders of Corporation P own 60 percent of the fair market value of the outstanding stock of Corporation O and the former shareholders of Corporation O own 40 percent of the fair market value of the outstanding stock of Corporation O. Because Corporation O is an entity more than 50 percent of the fair market value of the outstanding stock of which is owned by the former shareholders of Corporation P (based on ownership of Corporation P prior the change), the transfer of assets is not treated as a change in ownership of a substantial portion of the assets of Corporation P. However, a change in the ownership (within the meaning of Q/A–27) of Corporation O occurs.

Three-Times-Base-Amount Test for Parachute Payments

Q–30: Are all payments that are in the nature of compensation, are made to a disqualified individual, and are contingent on a change in ownership or control, parachute payments?

A–30: (a) No, to determine whether such payments are parachute payments, they must be tested against the individual's *base amount* (as defined in Q/A–34 of this section). To do this, the aggregate present value of all payments in the nature of compensation that are made or to be made to (or for the benefit of) the same disqualified individual and are contingent on the change in ownership or control must be determined. If this aggregate present value equals or exceeds the amount equal to 3 times the individual's base amount, the payments are parachute payments. If this aggregate present value is less than the amount equal to 3 times the individual's base amount, no portion of the payment is a parachute payment. See Q/A–31, Q/A–32, and Q/A–33 of this section for rules on determining present value. Parachute payments that are securities violation parachute payments are not included in the foregoing computation if they are not contingent on a change in ownership or control. See Q/A–37 of this section for the definition and treatment of securities violation parachute payments.

(b) The following examples illustrate the principles of this A–30:

Example 1. A is a disqualified individual with respect to Corporation M. A's base amount is $100,000. Payments in the nature of compensation that are contingent on a change in the ownership of Corporation M totaling $400,000 are made to A on the date of the change. The payments are parachute payments since they have an aggregate present value at least equal to 3 times A's base amount of $100,000 ($3 \times \$100,000 = \$300,000$).

Example 2. Assume the same facts as in *Example 1,* except that the payments contingent on the change in the ownership of Corporation M total $290,000. Since the payments do not have an aggregate present value at least equal to 3 times A's base amount, no portion of the payments is a parachute payment.

Q–31: As of what date is the present value of a payment determined?

A–31: (a) Except as provided in this section, the present value of a payment is determined as of the date on which the change in ownership or control occurs, or, if a payment is made prior to such date, the date on which the payment is made.

(b)(1) For purposes of determining whether a payment is a parachute payment, if a payment in the nature of compensation is the right to receive payments in a year (or years) subsequent to the year of the change in ownership or control, the value of the payment is the present value of such payment (or payments) calculated in accordance with Q/A–32 of this section and based on reasonable actuarial assumptions.

(2) If the payment in the nature of compensation is an obligation to provide health care, then for purposes of this A–31 and for applying the 3-times-base-amount test under Q/A–30 of this section, the present value of such obligation should be calculated in accordance with generally accepted accounting principles. For purposes of Q/A–30 and this A–31, the obligation to provide health care is permitted to be measured by projecting the cost of premiums for purchased health care insurance, even if no health care insurance is actually purchased. If the obligation to provide health care is made in coordination with a health care plan that the corporation makes available to a group, then the premiums

used for this purpose may be group premiums.

Q–32: What discount rate is to be used to determine present value?

A–32: For purposes of this section, present value generally is determined by using a discount rate equal to 120 percent of the applicable Federal rate (determined under section 1274(d) and the regulations thereunder) compounded semiannually. The applicable Federal rate to be used for this purpose is the Federal rate that is in effect on the date as of which the present value is determined. See Q/A–24 and 35 of this section. However, for any payment, the corporation and the disqualified individual may elect to use the applicable Federal rate that is in effect on the date that the contract which provides for the payment is entered into, if such election is made in the contract.

Q–33: If the present value of a payment to be made in the future is contingent on an uncertain future event or condition, how is the present value of the payment determined?

A–33: (a) In certain cases, it may be necessary to apply the 3-times-base-amount test of Q/A–30 of this section or to allocate a portion of the base amount to a payment described in paragraphs (a)(1), (2), and (3) of Q/A–2 of this section at a time when the aggregate present value of all such payments cannot be determined with certainty because the time, amount, or right to receive one or more such payments is contingent on the occurrence of an uncertain future event or condition. For example, a disqualified individual's right to receive a payment may be contingent on the involuntary termination of such individual's employment with the corporation. In such a case, it must be reasonably estimated whether the payment will be made. If it is reasonably estimated that there is a 50-percent or greater probability that the payment will be made, the full amount of the payment is considered for purposes of the 3-times-base-amount test and the allocation of the base amount. Conversely, if it is reasonably estimated that there is a less than 50-percent probability that the payment will be made, the payment is not considered for either purpose.

(b) If the estimate made under paragraph (a) of this A–33 is later determined to be incorrect, the 3-times-base-amount test described in Q/A–30 of this section must be reapplied (and the portion of the base amount allocated to previous payments must be reallocated (if necessary) to such payments) to reflect the actual time and amount of the payment. Whenever the 3-times-base-amount test is applied (or whenever the base amount is allocated), the aggregate present value of the payments received or to be received by the disqualified individual is redetermined as of the date described in A–31 of this section, using the discount rate described in A–32 of this section. This redetermination may affect the amount of any excess parachute payment for a prior taxable year. Alternatively, if, based on the application of the 3-times-base-amount test without regard to the payment described in paragraph (a) of this A–33, a disqualified individual is determined to have an excess parachute payment or payments, then the 3-times-base-amount test does not have to be reapplied when a payment described in paragraph (a) of this A–33 is made (or becomes certain to be made) if no base amount is allocated to such payment.

(c) The following examples illustrate the principles of this A–33:

Example 1. A, a disqualified individual with respect to Corporation M, has a base amount of $100,000. Under A's employment agreement with Corporation M, A is entitled to receive a payment in the nature of compensation in the amount of $250,000 contingent on a change in ownership or control of Corporation M. In addition, the agreement provides that if A's employment is terminated within 1 year after the change in ownership or control, A will receive an additional payment in the nature of compensation in the amount of $150,000, payable 1 year after the date of the change in ownership or control. A change in ownership or control of Corporation M occurs and A receives the first payment of $250,000. Corporation M reasonably estimates that there is a 50-percent probability that, as a result of the change, A's employment will be terminated within 1 year of the date of the change. For purposes of applying the 3-times-base-amount test (and if the first payment is determined to be a parachute payment, for purposes of allocating a portion of A's base amount to that payment), because M reasonably estimates that there is a 50-percent or greater probability that, as a result of the change, A's employment will be terminated within 1 year of the date of the change, Corporation M must assume that the $150,000 payment will be made to A as a result of the change in ownership or control. The present value of the additional payment is determined under Q/A–31 and Q/A–32 of this section.

Example 2. Assume the same facts as in *Example 1* except that Corporation M reasonably estimates that there is a less than 50-percent probability that, as a result of the change, A's employment will be terminated within 1 year of the date of the change. For purposes of applying the 3-times-base-amount test, because Corporation M reasonably estimates that there is a less than 50-percent probability that, as a result of the change, A's employment will be terminated within 1 year of the date of the change, Corporation M must assume that the $150,000 payment will not be made to A as a result of the change in ownership or control.

Example 3. B, a disqualified individual with respect to Corporation P, has a base amount of $200,000. Under B's employment agreement with Corporation P, if there is a change in ownership or control of Corporation P, B will receive a severance payment of $600,000 and a bonus payment of $400,000. In addition, the agreement provides that if B's employment is terminated within 1 year after the change, B will receive an additional payment in the nature of compensation of $500,000. A change in ownership or control of Corporation P occurs, and B receives the $600,000 and $400,000 payments. At the time of the change in ownership or control, Corporation P reasonably estimates that there is a less than 50-percent probability that B's employment will be terminated within 1 year of the change. For purposes of applying the 3-times-base-amount test, because Corporation P reasonably estimates that there is a less than 50-percent probability that B's employment will be terminated within 1 year of the date of the change, Corporation P assumes that the $500,000 payment will not be made to B. Eleven months after the change in ownership or control, B's employment is terminated, and the $500,000 payment is made to B. Because B was determined to have excess parachute payments without regard to the $500,000 payment, the 3-times-base-amount test is not reapplied and the base amount is not reallocated to include the $500,000 payment. The entire $500,000 payment is treated as an excess parachute payment.

Q–34: What is the base amount?

A–34: (a) The base amount of a disqualified individual is the average annual compensation for services performed for the corporation with respect to which the change in ownership or control occurs (or for a predecessor entity or a related entity) which was includible in the gross income of such individual for taxable years in the base period (including amounts that were excluded under section 911), or which would have been includible in such gross income if such person had been a United States citizen or resident. See Q/A–35 of this section for the definition of base period and for examples of base amount computations.

(b) If the base period of a disqualified individual includes a short taxable year or less than all of a taxable year, compensation for such short or incomplete taxable year must be annualized before determining the average annual compensation for the base period. In annualizing compensation, the frequency with which payments are expected to be made over an annual period must be taken into account. Thus, any amount of compensation for such a short or

incomplete taxable year that represents a payment that will not be made more often than once per year is not annualized.

(c) Because the base amount includes only compensation that is includible in gross income, the base amount does not include certain items that constitute parachute payments. For example, payments in the form of excludible fringe benefits are not included in the base amount but may be treated as parachute payments.

(d) The base amount includes the amount of compensation included in income under section 83(b) during the base period.

(e) The following example illustrates the principles of this A–34:

Example. A disqualified individual, D, receives an annual salary of $500,000 per year during the 5-year base period. D defers $100,000 of D's salary each year under the corporation's nonqualified deferred compensation plan. D's base amount is $400,000 ($400,000 × (5/5)).

Q–35: What is the base period?

A–35: (a) The base period of a disqualified individual is the most recent 5 taxable years of the individual ending before the date of the change in ownership or control. For this purpose, the date of the change in ownership or control is the date the corporation experiences one of the events described in Q/A–27, Q/A–28, or Q/A–29 of this section. However, if the disqualified individual was not an employee or independent contractor of the corporation with respect to which the change in ownership or control occurs (or a predecessor entity or a related entity as defined in Q/A–21 of this section) for this entire 5-year period, the individual's base period is the portion of such 5-year period during which the individual performed personal services for the corporation or predecessor entity or related entity.

(b) The following examples illustrate the principles of Q/A–34 of this section and this Q/A–35:

Example 1. A disqualified individual, D, was employed by a corporation for 2 years and 4 months preceding the taxable year in which a change in ownership or control of the corporation occurs. D's includible compensation income from the corporation was $30,000 for the 4-month period, $120,000 for the first full year, and $150,000 for the second full year. D's base amount is $120,000, (($3 × $30,000) + $120,000 + $150,000)/ 3.

Example 2. Assume the same facts as in *Example 1,* except that D also received a $60,000 signing bonus when D's employment with the corporation commenced at the beginning of the 4-month period. D's base amount is $140,000, (($60,000 + (3 × $30,000)) + $120,000 + $150,000) / 3. Since the bonus will not be paid more often than once per year, the amount of the bonus is not increased in annualizing D's compensation for the 4-month period.

Q–36: How is the base amount determined in the case of a disqualified individual who did not perform services for the corporation (or a predecessor entity or a related entity as defined in Q/A–21 of this section), prior to the individual's taxable year in which the change in ownership or control occurs?

A–36: (a) In such a case, the individual's base amount is the annualized compensation for services performed for the corporation (or a predecessor entity or related entity) which—

(1) Was includible in the individual's gross income for that portion, prior to such change, of the individual's taxable year in which the change occurred (including amounts that were excluded under section 911), or would have been includible in such gross income if such person had been a United States citizen or resident;

(2) Was not contingent on the change in ownership or control; and

(3) Was not a securities violation parachute payment.

(b) The following examples illustrate the principles of this A–36:

Example 1. On January 1, 2006, A, an individual whose taxable year is the calendar year, enters into a 4-year employment contract with Corporation M as an officer of the corporation. A has not previously performed services for Corporation M (or any predecessor entity or related entity as defined in Q/A–21 of this section). Under the employment contract, A is to receive an annual salary of $120,000 for each of the 4 years that he remains employed by Corporation M with any remaining unpaid balance to be paid immediately in the event that A's employment is terminated without cause. On July 1, 2006, after A has received compensation of $60,000, a change in the ownership of Corporation M occurs. Because of the change, A's employment is terminated without cause, and he receives a payment of $420,000. It is established by clear and convincing evidence that the $60,000 in compensation is not contingent on the change in ownership or control, but the presumption that the $420,000 payment is contingent on the change is not rebutted. Thus, the payment of $420,000 is treated as contingent on the change in ownership of Corporation M. In this case, A's base amount is $120,000 (2 × $60,000). Since the present value of the payment which is contingent on the change in ownership of Corporation M ($420,000) is more than 3 times A's base amount of $120,000 (3 × $120,000 = $360,000), the payment is a parachute payment.

Example 2. Assume the same facts as in *Example 1,* except that A also receives a signing bonus of $50,000 from Corporation M on January 1, 2006. It is established by clear and convincing evidence that the bonus is not contingent on the change in ownership. When the change in ownership occurs on July 1, 2006, A has received compensation of $110,000 (the $50,000 bonus plus $60,000 in salary). In this case, A's base amount is $170,000 [$50,000 + (2 × $60,000)]. Since the $50,000 bonus will not be paid more than once per year, the amount of the bonus is not increased in annualizing A's compensation. The present value of the potential parachute payment ($420,000) is less than 3 times A's base amount of $170,000 (3 × $170,000 = $510,000), and therefore no portion of the payment is a parachute payment.

Securities Violation Parachute Payments

Q–37: Must a payment be contingent on a change in ownership or control in order to be a parachute payment?

A–37: (a) No, the term *parachute payment* also includes any payment (other than a payment exempted under Q/A–6 or Q/A–8 of this section) that is in the nature of compensation and is to (or for the benefit of) a disqualified individual, if such payment is a securities violation payment. A securities violation payment is a payment made or to be made—

(1) Pursuant to an agreement that violates any generally enforced Federal or State securities laws or regulations; and

(2) In connection with a potential or actual change in ownership or control.

(b) A violation is not taken into account under paragraph (a)(1) of this A–37 if it is merely technical in character or is not materially prejudicial to shareholders or potential shareholders. Moreover, a violation will be presumed not to exist unless the existence of the violation has been determined or admitted in a civil or criminal action (or an administrative action by a regulatory body charged with enforcing the particular securities law or regulation) which has been resolved by adjudication or consent. Parachute payments described in this A–37 are referred to in this section as securities violation payments.

(c) Securities violation parachute payments that are not contingent on a change in ownership or control within the meaning of Q/A–22 of this section are not taken into account in applying the 3-times-base-amount test of Q/A–30 of this section. Such payments are considered parachute payments regardless of whether such test is met with respect to the disqualified individual (and are included in allocating base amount under Q/A–38 of this section). Moreover, the amount of a securities violation parachute payment treated as an excess parachute payment shall not be reduced by the portion of

such payment that is reasonable compensation for personal services actually rendered before the date of a change in ownership or control if such payment is not contingent on such change. Likewise, the amount of a securities violation parachute payment includes the portion of such payment that is reasonable compensation for personal services to be rendered on or after the date of a change in ownership or control if such payment is not contingent on such change.

(d) The rules in paragraph (b) of this A–37 also apply to securities violation parachute payments that are contingent on a change in ownership or control if the application of these rules results in greater total excess parachute payments with respect to the disqualified individual than would result if the payments were treated simply as payments contingent on a change in ownership or control (and hence were taken into account in applying the 3-times-base-amount test and were reduced by, or did not include, any applicable amount of reasonable compensation).

(e) The following examples illustrate the principles of this A–37:

Example 1. A, a disqualified individual with respect to Corporation M, receives two payments in the nature of compensation that are contingent on a change in the ownership or control of Corporation M. The present value of the first payment is equal to A's base amount and is not a securities violation parachute payment. The present value of the second payment is equal to 1.5 times A's base amount and is a securities violation parachute payment. Neither payment includes any reasonable compensation. If the second payment is treated simply as a payment contingent on a change in ownership or control, the amount of A's total excess parachute payments is zero because the aggregate present value of the payments does not equal or exceed 3 times A's base amount. If the second payment is treated as a securities violation parachute payment subject to the rules of paragraph (b) of this A–37, the amount of A's total excess parachute payments is 0.5 times A's base amount. Thus, the second payment is treated as a securities violation parachute payment.

Example 2. Assume the same facts as in *Example 1,* except that the present value of the first payment is equal to 2 times A's base amount. If the second payment is treated simply as a payment contingent on a change in ownership or control, the total present value of the payments is 3.5 times A's base amount, and the amount of A's total excess parachute payments is 2.5 times A's base amount. If the second payment is treated as a securities violation parachute payment, the amount of A's total excess parachute payments is 0.5 times A's base amount. Thus, the second payment is treated simply as a payment contingent on a change in ownership or control.

Example 3. B, a disqualified individual with respect to Corporation N, receives two payments in the nature of compensation that are contingent on a change in the control of Corporation N. The present value of the first payment is equal to 4 times B's base amount and is a securities violation parachute payment. The present value of the second payment is equal to 2 times B's base amount and is not a securities violation parachute payment. B establishes by clear and convincing evidence that the entire amount of the first payment is reasonable compensation for personal services to be rendered after the change in ownership or control. If the first payment is treated simply as a payment contingent on a change in ownership or control, it is exempt from the definition of *parachute payment* pursuant to Q/A–9 of this section. Thus, the amount of B's total excess parachute payment is zero because the present value of the second payment does not equal or exceed three times B's base amount. However, if the first payment is treated as a securities violation parachute payment, the amount of B's total excess parachute payments is 3 times B's base amount. Thus, the first payment is treated as a securities violation parachute payment.

Example 4. Assume the same facts as in *Example 3,* except that B does not receive the second payment and B establishes by clear and convincing evidence that the first payment is reasonable compensation for services actually rendered before the change in the control of Corporation N. If the payment is treated simply as a payment contingent on a change in ownership or control, the amount of B's excess parachute payment is zero because the amount treated as an excess parachute payment is reduced by the amount that B establishes as reasonable compensation. However, if the payment is treated as a securities violation parachute payment, the amount of B's excess parachute payment is 3 times B's base amount. Thus, the payment is treated as a securities violation parachute payment.

Computation and Reduction of Excess Parachute Payments

Q–38: How is the amount of an excess parachute payment computed?

A–38: (a) The amount of an excess parachute payment is the excess of the amount of any parachute payment over the portion of the disqualified individual's base amount that is allocated to such payment. For this purpose, the portion of the base amount allocated to any parachute payment is the amount that bears the same ratio to the base amount as the present value of such parachute payment bears to the aggregate present value of all parachute payments made or to be made to (or for the benefit of) the same disqualified individual. Thus, the portion of the base amount allocated to any parachute payment is determined by multiplying the base amount by a fraction, the numerator of which is the present value of such parachute payment and the denominator of which is the aggregate present value of all such payments. See Q/A–31, Q/A–32, and Q/A–33 of this section for rules on determining present value and Q/A–34 of this section for the definition of *base amount.*

(b) The following example illustrates the principles of this A–38:

Example. An individual with a base amount of $100,000 is entitled to receive two parachute payments, one of $200,000 and the other of $400,000. The $200,000 payment is made at the time of the change in ownership or control, and the $400,000 payment is to be made at a future date. The present value of the $400,000 payment is $300,000 on the date of the change in ownership or control. The portions of the base amount allocated to these payments are $40,000 (($200,000/$500,000) × $100,000) and $60,000 (($300,000/$500,000) × $100,000), respectively. Thus, the amount of the first excess parachute payment is $160,000 ($200,000—$40,000) and that of the second is $340,000 ($400,000—$60,000).

Q–39: May the amount of an excess parachute payment be reduced by reasonable compensation for personal services actually rendered before the change in ownership or control?

A–39: (a) Generally, yes, except that in the case of payments treated as securities violation parachute payments or when the portion of a payment that is treated as contingent on the change in ownership or control is determined under paragraph (b) or (c) of Q/A–24 of this section, the amount of an excess parachute payment is reduced by any portion of the payment that the taxpayer establishes by clear and convincing evidence is reasonable compensation for personal services actually rendered by the disqualified individual before the date of the change in ownership or control. Services reasonably compensated for by payments that are not parachute payments (for example, because the payments are not contingent on a change in ownership or control and are not securities violation parachute payments, or because the payments are exempt from the definition of parachute payment under Q/A–6 through Q/A–9 of this section) are not taken into account for this purpose. The portion of any parachute payment that is established as reasonable compensation is first reduced by the portion of the disqualified individual's base amount that is allocated to such parachute payment; any remaining portion of the parachute payment established as reasonable compensation then reduces the excess parachute payment.

(b) The following examples illustrate the principles of this A–39:

Example 1. Assume that a parachute payment of $600,000 is made to a

disqualified individual, and the portion of the individual's base amount that is allocated to the parachute payment is $100,000. Also assume that $300,000 of the $600,000 parachute payment is established as reasonable compensation for personal services actually rendered by the disqualified individual before the date of the change in ownership or control. Before the reasonable compensation is taken into account, the amount of the excess parachute payment is $500,000 ($600,000—$100,000). In reducing the excess parachute payment by reasonable compensation, the portion of the parachute payment that is established as reasonable compensation ($300,000) is first reduced by the portion of the disqualified individual's base amount that is allocated to the parachute payment ($100,000), and the remainder ($200,000) then reduces the excess parachute payment. Thus, in this case, the excess parachute payment of $500,000 is reduced by $200,000 of reasonable compensation.

Example 2. Assume the same facts as in *Example 1,* except that the full amount of the $600,000 parachute payment is established as reasonable compensation. In this case, the excess parachute payment of $500,000 is reduced to zero by $500,000 of reasonable compensation. As a result, no portion of any deduction for the payment is disallowed by section 280G, and no portion of the payment is subject to the 20-percent excise tax of section 4999.

Determination of Reasonable Compensation

Q–40: How is it determined whether payments are reasonable compensation?

A–40: (a) In general, whether payments are reasonable compensation for personal services actually rendered, or to be rendered, by the disqualified individual is determined on the basis of all the facts and circumstances of the particular case. Factors relevant to such a determination include, but are not limited to, the following—

(1) The nature of the services rendered or to be rendered;

(2) The individual's historic compensation for performing such services; and

(3) The compensation of individuals performing comparable services in situations where the compensation is not contingent on a change in ownership or control.

(b) For purposes of section 280G, reasonable compensation for personal services includes reasonable compensation for holding oneself out as available to perform services and refraining from performing services (such as under a covenant not to compete).

Q–41: Is any particular type of evidence generally considered clear and convincing evidence of reasonable compensation for personal services?

A–41: Yes, a showing that payments are made under a nondiscriminatory employee plan or program (as defined in Q/A–26 of this section) generally is considered to be clear and convincing evidence that the payments are reasonable compensation. This is true whether the personal services for which the payments are made are actually rendered before, or to be rendered on or after, the date of the change in ownership or control. Q/A–46 of this section (relating to the treatment of an affiliated group as one corporation) does not apply for purposes of this A–41. No determination of reasonable compensation is needed for payments under qualified plans to be exempt from the definition of *parachute payment* under Q/A–8 of this section.

Q–42: Is any particular type of evidence generally considered clear and convincing evidence of reasonable compensation for personal services to be rendered on or after the date of a change in ownership or control?

A–42: (a) Yes, if payments are made or to be made to (or on behalf of) a disqualified individual for personal services to be rendered on or after the date of a change in ownership or control, a showing of the following generally is considered to be clear and convincing evidence that the payments are reasonable compensation for services to be rendered on or after the date of the change in ownership or control—

(1) The payments were made or are to be made only for the period the individual actually performs such personal services; and

(2) If the individual's duties and responsibilities are substantially the same after the change in ownership or control, the individual's annual compensation for such services is not significantly greater than such individual's annual compensation prior to the change in ownership or control, apart from normal increases attributable to increased responsibilities or cost of living adjustments. If the scope of the individual's duties and responsibilities are not substantially the same, the annual compensation after the change is not significantly greater than the annual compensation customarily paid by the employer or by comparable employers to persons performing comparable services. However, except as provided in paragraph (b) of this A–42, such clear and convincing evidence will not exist if the individual does not, in fact, perform the services contemplated in exchange for the compensation.

(b) Generally, an agreement under which the disqualified individual must refrain from performing services (such as a covenant not to compete) is an agreement for the performance of personal services for purposes of this A–42 to the extent that it is demonstrated by clear and convincing evidence that the agreement substantially constrains the individual's ability to perform services and there is a reasonable likelihood that the agreement will be enforced against the individual. In the absence of clear and convincing evidence, payments under the agreement are treated as severance payments under Q/A–44 of this section.

(c) If the employment of a disqualified individual is involuntarily terminated before the end of a contract term and the individual is paid damages for breach of contract, a showing of the following factors generally is considered clear and convincing evidence that the payment is reasonable compensation for personal services to be rendered on or after the date of change in ownership or control—

(1) The contract was not entered into, amended, or renewed in contemplation of the change in ownership or control;

(2) The compensation the individual would have received under the contract would have qualified as reasonable compensation under section 162;

(3) The damages do not exceed the present value (determined as of the date of receipt) of the compensation the individual would have received under the contract if the individual had continued to perform services for the employer until the end of the contract term;

(4) The damages are received because an offer to provide personal services was made by the disqualified individual but was rejected by the employer; and

(5) The damages are reduced by mitigation. Mitigation will be treated as occurring when such damages are reduced (or any payment of such damages is returned) to the extent of the disqualified individual's earned income (within the meaning of section 911(d)(2)(A)) during the remainder of the period in which the contract would have been in effect. See Q/A–44 of this section for rules regarding damages for a failure to make severance payments.

(c) The following examples illustrate the principles of this A–42:

Example 1. A, a disqualified individual, has a three-year employment contract with Corporation M, a publicly traded corporation. Under this contract, A is to receive a salary for $100,000 for the first year of the contract and, for each succeeding year, an annual salary that is 10 percent higher than the prior year's salary. During the third year of the contract, Corporation N acquires all the stock of Corporation M. Prior to the change in ownership, Corporation N arranges to retain A's services by entering into an employment contract with A that is essentially the same as A's contract with Corporation M. Under

the new contract, Corporation N is to fulfill Corporation M's obligations for the third year of the old contract, and, for each of the succeeding years, pay A an annual salary that is 10 percent higher than A's prior year's salary. Amounts are payable under the new contract only for the portion of the contract term during which A remains employed by Corporation N. A showing of the facts described above (and in the absence of contradictory evidence) is regarded as clear and convincing evidence that all payments under the new contract are reasonable compensation for personal services to be rendered on or after the date of the change in ownership. Therefore, the payments under this agreement are exempt from the definition of *parachute payment* pursuant to Q/A–9 of this section.

Example 2. Assume the same facts as in *Example 1* except that A does not perform the services described in the new contract, but receives payment under the new contract. Because services were not rendered after the change, the payments under this contract are not exempt from the definition of *parachute payment* pursuant to Q/A–9 of this section.

Example 3. Assume the same facts as in *Example 1* except that under the new contract A agrees to perform consulting services to Corporation N, when and if, Corporation N requires A's services. Assume further that when Corporation N does not require A's services, the contract provides that A must not perform services for any other competing company. Corporation N previously enforced similar contracts against former employees of Corporation N. Because A is substantially constrained under this contract and Corporation N is reasonably likely to enforce the contract against A, the agreement is an agreement for the performance of services under paragraph (b) of this A–42. Assuming the requirements of paragraph (a) of this A–42 are met and there is clear and convincing evidence that all payments under the new contract are reasonable compensation for personal services to be rendered on or after the date of the change in ownership, the payments under this contract are exempt from the definition of *parachute payment* pursuant to Q/A–9 of this section.

Example 4. Assume the same facts as in *Example 1,* except that the employment contract with Corporation N does not provide that amounts are payable under the contract only for the portion of the term for which A remains employed by Corporation N. Shortly after the change in ownership, and despite A's request to remain employed by Corporation N, A's employment with Corporation N is involuntarily terminated. Shortly thereafter, A obtains employment with Corporation O. A commences a civil action against Corporation N, alleging breach of the employment contract. In settlement of the litigation, A receives an amount equal to the present value of the compensation A would have received under the contract with Corporation N, reduced by the amount of compensation A otherwise receives from Corporation O during the period that the contract would have been in effect. A showing of the facts described above (and in the absence of contradictory evidence) is regarded as clear and convincing evidence that the amount A receives as damages is reasonable compensation for personal services to be rendered on or after the date of the change in ownership. Therefore, the amount received by A is exempt from the definition of *parachute payment* pursuant to Q/A–9 of this section.

Q–43: Is any particular type of payment generally considered reasonable compensation for personal services actually rendered before the date of a change in ownership or control?

A–43: (a) Yes, payments of compensation earned before the date of a change in ownership or control generally are considered reasonable compensation for personal services actually rendered before the date of a change in ownership or control if they qualify as reasonable compensation under section 162.

Q–44: May severance payments be treated as reasonable compensation?

A–44: (a) No, severance payments are not treated as reasonable compensation for personal services actually rendered before, or to be rendered on or after, the date of a change in ownership or control. Moreover, any damages paid for a failure to make severance payments are not treated as reasonable compensation for personal services actually rendered before, or to be rendered on or after, the date of such change. For purposes of this section, the term *severance payment* means any payment that is made to (or for the benefit of) a disqualified individual on account of the termination of such individual's employment prior to the end of a contract term, but does not include any payment that otherwise would be made to (or for the benefit of) such individual on the termination of such individual's employment, whenever occurring.

(b) The following example illustrates the principles of this A–44:

Example. A, a disqualified individual, has a three-year employment contract with Corporation X. Under the contract, A will receive a salary of $200,000 for the first year of the contract, and for each succeeding year, an annual salary that is $100,000 higher than the previous year. In the event of A's termination of employment following a change in ownership or control, the contract provides that A will receive the remaining salary due under the employment contract. At the beginning of the second year of the contract, Corporation Y acquires all of the stock of Corporation X, A's employment is terminated, and A receives $700,000 ($300,000 for the second year of the contract plus $400,000 for the third year of the contract) representing the remaining salary due under the employment contract. Because the $700,000 payment is treated as a severance payment, it is not reasonable compensation for personal services on or after the date of the change in ownership or control. Thus, the full amount of the $700,000 is a parachute payment.

Miscellaneous Rules

Q–45: How is the term *corporation* defined?

A–45: For purposes of this section, the term *corporation* has the meaning prescribed by section 7701(a)(3) and § 301.7701–2(b). For example, a *corporation,* for purposes of this section, includes a publicly traded partnership treated as a corporation under section 7704 (a); an entity described in § 301.7701–3(c)(1)(v)(A) of this chapter; a real estate investment trust under section 856(a); a corporation that has mutual or cooperative (rather than stock) ownership, such as a mutual insurance company, a mutual savings bank, or a cooperative bank (as defined in section 7701(a)(32)), and a foreign corporation as defined under section 7701(a)(5).

Q–46: How is an affiliated group treated?

A–46: For purposes of this section, and except as otherwise provided in this section, all members of the same affiliated group (as defined in section 1504, determined without regard to section 1504(b)) are treated as one corporation. Rules affected by this treatment of an affiliated group include (but are not limited to) rules relating to exempt payments of certain corporations (Q/A–6, Q/A–7 of this section (except as provided therein)), payor of parachute payments (Q/A–10 of this section), disqualified individuals (Q/A–15 through Q/A–21 of this section (except as provided therein)), rebuttal of the presumption that payments are contingent on a change (Q/A–26 of this section (except as provide therein)), change in ownership or control (Q/A–27, 28, and 29 of this section), and reasonable compensation (Q/A–42, 43, and 44 of this section).

Effective Date

Q–47: What is the general effective date of section 280G?

A–47: (a) Generally, section 280G applies to payments under agreements entered into or renewed after June 14, 1984. Any agreement that is entered into before June 15, 1984, and is renewed after June 14, 1984, is treated as a new contract entered into on the day the renewal takes effect.

(b) For purposes of paragraph (a) of this A–47, a contract that is terminable or cancellable unconditionally at will by either party to the contract without the consent of the other, or by both parties to the contract, is treated as a new

contract entered into on the date any such termination or cancellation, if made, would be effective. However, a contract is not treated as so terminable or cancellable if it can be terminated or cancelled only by terminating the employment relationship or independent contractor relationship of the disqualified individual.

(c) Section 280G applies to payments under a contract entered into on or before June 14, 1984, if the contract is amended or supplemented after June 14, 1984, in significant relevant respect. For this purpose, a *supplement* to a contract is defined as a new contract entered into after June 14, 1984, that affects the trigger, amount, or time of receipt of a payment under an existing contract.

(d)(1) Except as otherwise provided in paragraph (e) of this A–47, a contract is considered to be amended or supplemented in significant relevant respect if provisions for payments contingent on a change in ownership or control (parachute provisions), or provisions in the nature of parachute provisions, are added to the contract, or are amended or supplemented to provide significant additional benefits to the disqualified individual. Thus, for example, a contract generally is treated as amended or supplemented in significant relevant respect if it is amended or supplemented—

(i) To add or modify, to the disqualified individual's benefit, a change in ownership or control trigger;

(ii) To increase amounts payable that are contingent on a change in ownership or control (or, where payment is to be made under a formula, to modify the formula to the disqualified individual's advantage); or

(iii) To accelerate, in the event of a change in ownership or control, the payment of amounts otherwise payable at a later date.

(2) For purposes of paragraph (a) of this A–47, a payment is not treated as being accelerated in the event of a change in ownership or control if the acceleration does not increase the present value of the payment.

(e) A contract entered into on or before June 14, 1984, is not treated as amended or supplemented in significant relevant respect merely by reason of normal adjustments in the terms of employment relationship or independent contractor relationship of the disqualified individual. Whether an adjustment in the terms of such a relationship is considered normal for this purpose depends on all of the facts and circumstances of the particular case. Relevant factors include, but are not limited to, the following—

(1) The length of time between the adjustment and the change in ownership or control;

(2) The extent to which the corporation, at the time of the adjustment, viewed itself as a likely takeover candidate;

(3) A comparison of the adjustment with historical practices of the corporation;

(4) The extent of overlap between the group receiving the benefits of the adjustment and those members of that group who are the beneficiaries of pre-June 15, 1984, parachute contracts; and

(5) The size of the adjustment, both in absolute terms and in comparison with the benefits provided to other members of the group receiving the benefits of the adjustment.

Q–48: What is the effective date of this section?

A–48: This section applies to any payment that is contingent on a change in ownership or control that occurs on or after January 1, 2004. Taxpayers can rely on these rules for the treatment of any parachute payment made after February 20, 2002.

Robert E. Wenzel,

Deputy Commissioner of Internal Revenue.

[FR Doc. 02–3819 Filed 2–19–02; 8:45 am]

BILLING CODE 4830–01–P

DEPARTMENT OF THE TREASURY

Internal Revenue Service

26 CFR Part 1

[REG–142499–01]

RIN 1545–BA24

Catch-Up Contributions for Individuals Age 50 or Over; Hearing

AGENCY: Internal Revenue Service (IRS), Treasury.

ACTION: Change of date of public hearing; extension of time to submit written comments and outlines of oral comments.

SUMMARY: This document changes the date of the public hearing on the proposed regulations that relate to requirements for retirement plans providing catch-up contributions to individuals age 50 or older pursuant to the provisions of section 414(v) and supercedes the notice of public hearing published in the **Federal Register** on October 23, 2001. It also extends the time to submit written comments and outlines of oral comments for the hearing.

DATES: The public hearing will be held April 30, 2002, beginning at 10 a.m. Written comments and outlines of oral comments must be received by April 15, 2002.

ADDRESSES: The public hearing will be held in the Auditorium, Internal Revenue Building, 1111 Constitution Avenue, NW., Washington, DC. Send submissions to CC:ITA:RU (REG–142499–01), Room 5226, Internal Revenue Service, POB 7604, Ben Franklin Station, Washington, DC 20044. Submissions may be hand delivered Monday through Friday between the hours of 8 a.m. and 5 p.m. to CC:ITA:RU (REG–142499–01), Courier's Desk, Internal Revenue Service, 1111 Constitution Avenue, NW., Washington, DC. Alternatively, taxpayers may submit comments directly to the IRS Internet site at www.irs.gov/regs.

FOR FURTHER INFORMATION CONTACT: Concerning the proposed regulations, R. Lisa Mojiri-Azad or John Ricotta, (202) 622–6060 (not a toll-free number); concerning submissions of comments, the hearing, and/or to be placed on the building access list to attend the hearing, Donna Poindexter (202) 622–7180 (not a toll-free number).

SUPPLEMENTARY INFORMATION:

Background

A notice of proposed rulemaking and notice of public hearing that appeared in the **Federal Register** on October 23, 2001, (66 FR 53555), announced that a public hearing on the proposed regulations relating to requirements for retirement plans providing catch-up contributions to individuals age 50 or older pursuant to the provisions of section 414(v) would be held on February 21, 2002, in the IRS Auditorium, Internal Revenue Building, 1111 Constitution Avenue, NW., Washington, DC. Subsequently, the date of the public hearing has changed to April 30, 2002, at 10 a.m., in the IRS Auditorium. Written comments and outlines of oral comments must be received by April 15, 2002.

Cynthia Grigsby,

Chief, Regulations Unit, Associate Chief Counsel (Income Tax and Accounting).

[FR Doc. 02–4093 Filed 2–14–02; 3:44 pm]

BILLING CODE 4830–01–P

ENVIRONMENTAL PROTECTION AGENCY

40 CFR Part 300

[FRL–7147–3]

National Oil and Hazardous Substance Pollution Contingency Plan; National Priorities List

AGENCY: Environmental Protection Agency.

ACTION: Notice of intent to partially delete the California Gulch Superfund Site from the National Priorities List.

SUMMARY: The Environmental Protection Agency (EPA) Region 8 is issuing a notice of intent to partially delete the subunits A and B, residential waste rock piles, and parks and playgrounds within Operable Unit 9 of the California Gulch Superfund Site (Site), located in Lake County, Colorado, from the National Priorities List (NPL) and requests public comments on this notice of intent. The NPL, promulgated pursuant to section 105 of the Comprehensive Environmental Response, Compensation, and Liability Act (CERCLA) of 1980, as amended, is found at appendix B of 40 CFR part 300 which is the National Oil and Hazardous Substances Pollution Contingency Plan (NCP). The EPA and the State of Colorado, through the Colorado Department of Public Health and Environment, have determined that all appropriate response actions under CERCLA, other than operation and maintenance and five-year reviews, have been completed. However, this partial deletion does not preclude future actions under Superfund. In the ''Rules and Regulations'' Section of today's **Federal Register**, we are publishing a direct final notice of partial deletion of the California Gulch Superfund Site without prior notice of intent to partially delete because we view this as a noncontroversial revision and anticipate no adverse comment. We have explained our reasons for this partial deletion in the preamble to the direct final partial deletion. If we receive no adverse comment(s) on this notice of intent to partially delete or the direct final notice of partial deletion, we will not take further action on this notice of intent to partially delete. If we receive adverse comment(s), we will withdraw the direct final notice of partial deletion and it will not take effect. We will, as appropriate, address all public comments in a subsequent final partial deletion notice based on this notice of intent to partially delete. We will not institute a second comment period on this notice of intent to partially delete. Any parties interested in commenting must do so at this time. For additional information, see the direct final notice of partial deletion which is located in the Rules section of this **Federal Register**.

DATES: Comments concerning this Site must be received by March 22, 2002.

ADDRESSES: Written comments should be addressed to: Rebecca Thomas, Remedial Project Manager, Environmental Protection Agency, Region 8, Mail Code 8EPR–SR, 999 18th Street, Suite 300, Denver, CO 80202. *Thomas.Rebecca@epamail.epa.gov.*

FOR FURTHER INFORMATION CONTACT: Rebecca Thomas, Remedial Project Manager, Environmental Protection Agency, Region 8, Mail Code 8EPR–SR, 999 18th Street, Suite 300, Denver, CO 80202. *Thomas.Rebecca@epamail.epa.gov* (303) 312–6552 or toll free at (800) 227–8917.

SUPPLEMENTARY INFORMATION: For additional information, see the Direct final notice of partial deletion which is located in the Rules section of this **Federal Register**.

Information Repositories

Repositories have been established to provide detailed information concerning this decision at the following address:

U.S. EPA Region 8, Superfund Records Center, 999 18th Street, 5th Floor, Denver, CO 80202, (303) 312–6473 or toll free (800) 227–8917; Viewing hours: 8:00 a.m. to 4:30 p.m., Monday through Friday, excluding holidays.

Lake County Pubic Library, 1115 Harrison Avenue, Leadville, CO 80461, (719) 486–0569.

List of Subjects in 40 CFR Part 300

Environmental protection, Air pollution control, Chemicals, Hazardous waste, Hazardous substances, Intergovernmental relations, Penalties, Reporting and recordkeeping requirements, Superfund, Water pollution control, Water supply.

Authority: 33 U.S.C. 1321(c)(2); 42 U.S.C. 9601–9657; E.O. 12777, 56 FR 54757, 3 CFR, 1991 Comp., p. 351; E.O. 12580, 52 FR 2923; 3 CFR, 1987 Comp., p. 193.

Dated: January 30, 2002.

Jack W. McGraw,

Acting Regional Administrator, Region 8.

[FR Doc. 02–3920 Filed 2–19–02; 8:45 am]

BILLING CODE 6560–50–P

ENVIRONMENTAL PROTECTION AGENCY

48 CFR Parts 1509 and 1552

[FRL–7147–4]

Acquisition Regulation: Contractor Performance Evaluations

AGENCY: Environmental Protection Agency.

ACTION: Proposed rule.

SUMMARY: The Environmental Protection Agency (EPA) is proposing to amend the EPA Acquisition Regulation to revise its policy and procedures regarding the evaluation of contractor performance. This action is necessary because EPA's current regulation eliminates the use of the National Institutes of Health (NIH) Contractor Performance System to record contractor performance histories for construction acquisitions. This revision will allow EPA contracting officers to utilize the NIH system for construction type acquisition in lieu of the Federal Acquisition Regulation prescribed Standard Form 1420, Performance Evaluation (Construction Contracts). The NIH obtained approval from the Civilian Agency Acquisition Council regarding the use of its construction module in lieu of Standard Form 1420.

DATES: Comments should be submitted no later than March 22, 2002.

ADDRESSES: Submit written comments to Frances Smith at the following address: U.S. Environmental Protection Agency, Office of Acquisition Management, Mail Code 3802R, 1200 Pennsylvania Avenue, NW., Ariel Rios Building, Washington, DC 20460. Comments may be sent electronically to *Smith.Frances@epa.gov.* Electronic comments must be submitted as an ASCII file, avoiding the use of special characters and any form of encryption. Floppy disks (3½ size) may also be submitted with comments in Corel WordPerfect format or ASCII file format. Do not submit confidential business information through E-mail.

FOR FURTHER INFORMATION CONTACT: Frances Smith, U.S. Environmental Protection Agency, Office of Acquisition Management, (202) 564–4368.

SUPPLEMENTARY INFORMATION:

A. Background

This proposed rule amends the Environmental Protection Agency Acquisition Regulation Subpart 1509.170 and 1552.209–76 to allow EPA contracting officers to utilize the construction module in the National Institutes of Health's Contractor

Performance System. EPA currently uses the services module in the NIH system to evaluate contractor performances of both large and small businesses who are awarded EPA contracts in excess of $100,000. This proposed rule will allow contracting officers to use either the services module or the construction module in the NIH system, depending on the type of acquisition.

B. Executive Order 12866

This proposed rule is not a significant regulatory action for the purposes of Executive Order 12866; therefore, no review is required by the Office of Information and Regulatory Affairs within the Office of Management and Budget (OMB).

C. Paperwork Reduction Act

The Paperwork Reduction Act applies to this proposed rule, and the information collection request has been evaluated by the Office of Management and Budget. The Office of Information and Regulatory Affairs within the Office of Management and Budget has issued OMB Clearance No. 9000–0142 for the collection of contractor performance information. Comments regarding Paperwork Reduction Act concerns should be sent to the Office of Management and Budget (Attn: EPA Desk Officer).

D. Regulatory Flexibility Act (RFA), as Amended by the Small Business Regulatory Enforcement Fairness Act of 1996 (SBREFA), 5 U.S.C. 601 et seq.

The RFA generally requires an agency to prepare a regulatory flexibility analysis of any rule subject to notice and comment rulemaking requirements under the Administrative Procedure Act or any other statute unless the agency certifies that the rule will not have a significant economic impact on a substantial number of small entities. Small entities include small businesses, small organizations, and small governmental jurisdictions.

For purposes of assessing the impact of today's proposed rule on small entities, small entity is defined as: (1) A small business that meets the definition of a small business found in the Small Business Act and codified at 13 CFR 121.201; (2) a small governmental jurisdiction that is a government of a city, county, town, school district or special district with a population of less than 50,000; and (3) a small organization that is any not-for-profit enterprise which is independently owned and operated and is not dominant in its field.

After considering the economic impacts of today's proposed rule on small entities, I certify that this action will not have a significant economic impact on a substantial number of small entities. In determining whether a rule has a significant economic impact on a substantial number of small entities, the impact of concern is any significant adverse economic impact on small entities, since the primary purpose of the regulatory flexibility analyses is to identify and address regulatory alternatives ''which minimize any significant economic impact of the proposed rule on small entities.'' 5 U.S.C. 603 and 604. Thus, an agency may certify that a rule will not have a significant economic impact on a substantial number of small entities if the rule relieves regulatory burden, or otherwise has a positive economic effect on all of the small entities subject to the rule.

This proposed rule requires no reporting or record-keeping by small or large business contractors. Rather, it provides EPA contractors with a formal opportunity, generally once a year per contract, to review and comment on their specific performance evaluations as conducted by the cognizant EPA contracting officer. Therefore, this proposed rule will have no adverse or significant economic impact on small entities.

E. Unfunded Mandates Reform Act

Title II of the Unfunded Mandates Reform Act of 1995 (UMRA), Public Law 104–4, establishes requirements for Federal agencies to assess their regulatory actions on State, local, and Tribal governments, and the private sector. This proposed rule does not contain a Federal mandate that may result in expenditures of $100 million or more for State, local, and Tribal governments, in the aggregate, or the private sector in one year. Any private sector costs for this action relate to paperwork requirements and associated expenditures that are far below the level established for UMRA applicability. Thus, this proposed rule is not subject to the requirements of sections 202 and 205 of the UMRA.

F. Executive Order 13045

Executive Order 13045, Protection of Children from Environmental Health Risks and Safety Risks (62 FR 19885, April 23, 1997), applies to any rule that: (1) Is determined to be economically significant as defined under Executive Order 12866, and (2) concerns an environmental health or safety risk that EPA has reason to believe may have a disproportionate effect on children. If the regulatory action meets both criteria, the Agency must evaluate the environmental health or safety effects of the planned rule on children, and explain why the planned regulation is preferable to other potentially effective and reasonably feasible alternatives considered by the Agency.

This proposed rule is not subject to Executive Order 13045 because it is not an economically significant rule as defined by Executive Order 12866, and because it does not involve decisions on environmental health or safety risks.

G. Executive Order 13132

Executive Order 13132 entitled ''Federalism'' (64 FR 43255, August 10, 1999) requires EPA to develop an accountable process to ensure ''meaningful and timely input by State and local officials in the development of regulatory policies that have federalism implications.'' ''Policies that have federalism implications'' as defined in the Executive Order include regulations that have ''substantial direct effects on the States, on the relationship between the national government and the States, or on the distribution of power and responsibilities among the various levels of government.'' Under Section 6 of Executive Order 13132, EPA may not issue a regulation that has federalism implications, that imposes substantial direct compliance costs, and that is not required by statute, unless the Federal government provides the funds necessary to pay the direct compliance costs incurred by State and local governments, or EPA consults with State and local officials early in the process of developing the proposed regulation. EPA also may not issue a regulation that has federalism implications and that preempts State law, unless the Agency consults with State and local officials early in the process of developing the proposed regulation.

This proposed rule does not have federalism implications. It will not have substantial direct effects on the States, on the relationship between the national government and the States distribution of power and responsibilities among the various levels of government, as specified in Executive Order 13132. Thus, the requirements of section 6 of the Executive Order do not apply to this proposed rule.

H. Executive Order 13175

Executive Order 13175, entitled ''Consultation and Coordination with Indian Tribal Governments'' (65 FR 67249, November 6, 2000), requires EPA to develop an accountable process to ensure ''meaningful and timely input by

tribal officials in the development of regulatory policies that have tribal implications.'' ''Policies that have tribal implications'' is defined in the Executive Order to include regulations that have ''substantial direct effects on one or more Indian tribes, on the relationship between the Federal government and the Indian tribes, or on the distribution of power and responsibilities between the Federal government and Indian tribes.''

This proposed rule does not have tribal implications. It will not have substantial direct effects on tribal governments, on the relationship between the Federal government and Indian tribes, or on the distribution of power and responsibilities between the Federal government and Indian tribes, as specified in Executive Order 13175. Thus, Executive Order 13175 does not apply to this proposed rule.

In the spirit of Executive Order 13175, and consistent with EPA policy to promote communications between EPA and tribal governments, EPA specifically solicits additional comment on this proposed rule from tribal officials.

I. National Technology Transfer and Advancement Act of 1995

EPA will use voluntary consensus standards, as directed by section 12(d) of the National Technology Transfer and Advancement Act of 1995 (NTTAA), Public Law 104–113, section 12(d) (15 U.S.C. 272 note), in its procurement activities. The NTTAA directs EPA to use voluntary consensus standards in its regulatory activities unless to do so would be inconsistent with applicable law or otherwise impractical. Voluntary consensus standards are technical standards (e.g., materials specifications, test methods, sampling procedures, and business practices) that are developed or adopted by voluntary consensus standards bodies. The NTTAA directs EPA to provide Congress, through OMB, explanations when the Agency decides not to use available and applicable voluntary consensus standards.

This rulemaking does not involve technical standards. Therefore, EPA is not considering use of any voluntary consensus standards. EPA welcomes comments on this aspect of the interim rulemaking, and, specifically, invites the public to identify potentially applicable voluntary consensus standards and to explain why such standards should be used in this regulation.

J. Executive Order 13211 (Energy Effects)

This proposed rule is not subject to Executive Order 13211, ''Actions Concerning Regulations That Significantly Affect Energy Supply, Distribution, or Use'' (66 FR 28355 (May 22, 2001)) because it is not a significant regulatory action under Executive Order 12866.

List of Subjects in 48 CFR Parts 1509 and 1552.

Government procurement.

Therefore, 48 CFR Chapter 15 is proposed to be amended as set forth below:

1. The authority citation for Parts 1509 and 1552 is revised to read as follows:

Authority: 5 U.S.C. 301; Sec. 205(c), 63 Stat. 390, as amended, 40 U.S.C. 486(c); and 41 U.S.C. 418b.

PART 1509—[AMENDED]

2. Section 1509.170–3 is amended by revising paragraphs (a), (c), and adding paragraph (d) to read as follows:

1509.170–3 Applicability

(a) This subpart applies to all EPA acquisitions in excess of $100,000, except for architect-engineer acquisitions, acquisitions awarded under the Federal Acquisition Regulation (FAR) Subpart 8.6, Acquisitions from Federal Prison Industries, Incorporated, FAR Subpart 8.7, Acquisitions from Nonprofit Agencies Employing People Who Are Blind or Severely Disabled, and FAR 13.5, Test Program for Certain Commercial Items. FAR 36.604 provides detailed instructions for architect-engineer contractor performance evaluations.

* * * * *

(c) EPA Form 1900–26, Contracting Officer's Evaluation of Contractor Performance, and EPA Form 1900–27, Project Officer's Evaluation of Contractor Performance, applies to all performance evaluations completed prior to May 26, 1999. Thereafter, EPA Forms 1900–26 and 1900–27 are obsolete, and contracting officers shall complete all contractor performance evaluations by use of the National Institutes of Health's Contractor Performance System in accordance with EPAAR paragraph (a) of this section.

(d) Construction acquisitions shall be completed by use of the NIH construction module. Performance evaluations for construction acquisitions shall be completed in accordance with EPAAR 1509.170–5.

3. Section 1509.170–4 is amended by revising the last sentence of paragraph (f) to read as follows:

1509.170–4 Definitions

* * * * *

(f) * * * Performance categories include quality, cost control, timeliness of performance, business relations, compliance with labor standards, compliance with safety standards, and meeting Small Disadvantaged Business subcontracting requirements.

4. Section 1509.170–5 is amended by revising paragraph (b) to read as follows:

1509.170–5 Policy

* * * * *

(b) For service type acquisitions, contracting officers shall use the National Institutes of Health (NIH) Contractor Performance System to record evaluations for all contract performance periods expiring after May 26, 1999. For construction type acquisitions, contracting officers shall use the NIH system to record evaluations for all contract performance periods expiring after [the effective date of the final rule].

* * * * *

5. Section 1509.170–8 is amended by revising paragraph (b) to read as follows:

1509.170–8 Contractor Performance Report

* * * * *

(b) The performance categories and ratings used in the evaluation of contractor performance are described in the clause at 1552.209–76. The NIH system provides instructions to assist contracting officers and project officers with completing evaluations.

PART 1552—[AMENDED]

6. Section 1552.209–76 is amended by revising the undesignated text between the section heading and paragraph (a), revising paragraphs (a)(2), (b)(2) and (b)(4) to read as follows:

1552.209–76 Contractor Performance Evaluations.

As prescribed in section 1509–170–1, insert the following clause in all applicable solicitations and contracts.

Contractor Performance Evaluations (XX 2002)

The contracting officer shall complete a Contractor Performance Report (Report) within ninety (90) business days after the end of each 12 months of contract performance (interim Report) or after the last 12 months (or less) of contract performance (final Report) in accordance with EPAAR 1509.170–5. The contractor shall be evaluated based

on the following ratings: 0 = Unsatisfactory, 1 = Poor, 2 = Fair, 3 = Good, 4 = Excellent, 5 = Outstanding, N/A = Not Applicable.

The contractor may be evaluated based on the following performance categories: Quality, Cost Control, Timeliness of Performance, Business Relations, Compliance with Labor Standards, Compliance with Safety Standards, and Meeting Small Disadvantaged Business Subcontracting Requirements.

(a) * * *

(2) Evaluate contractor performance and assign a rating for quality, cost control, timeliness of performance, compliance with labor standards, and compliance with safety standards performance categories (including a narrative for each rating);

* * * * *

(b) * * *

(2) Assign a rating for the business relations and meeting small disadvantaged business subcontracting requirements performance categories (including a narrative for each rating).

* * * * *

(4) Provide any additional information concerning the quality, cost control, timeliness of performance, compliance with labor standards, and compliance with safety standards performance categories if deemed appropriate for the evaluation or future evaluations (if any), and provide any information regarding subcontracts, key personnel, and customer satisfaction; and

* * * * *

Dated: January 24, 2002.

John Oliver,

Acting Director, Office of Acquisition Management.

[FR Doc. 02–4068 Filed 2–19–02; 8:45 am]

BILLING CODE 6560–50–P

DEPARTMENT OF COMMERCE

National Oceanic and Atmospheric Administration

50 CFR Part 226

[Docket No. 020124019–2019–01, I.D. 030601D]

Endangered and Threatened Species; Determination on a Petition to Revise Critical Habitat for Northern Right Whales in the Pacific

AGENCY: National Marine Fisheries Service (NMFS), National Oceanic and Atmospheric Administration (NOAA), Commerce.

ACTION: Response to petition; final determination.

SUMMARY: On October 13, 2000, NMFS received a petition dated October 4, 2000, requesting that NMFS revise the present critical habitat designation for the northern right whale under the Endangered Species Act (ESA) by designating a new area within the eastern Bering Sea as critical habitat for right whales in the North Pacific. NMFS has determined that the petition is not warranted at this time. NMFS recognizes that the revision of critical habitat may be prudent, but finds that the extent of critical habitat cannot be determined at this time because the essential biological requirements of the population in the North Pacific Ocean are not sufficiently understood. NMFS will continue to analyze issues raised by the petition following the completion of planned 2002 right whale surveys and research.

ADDRESSES: Comments and requests for copies of this determination should be addressed to the Division Chief, Marine Mammal Division, Office of Protected Resources, NMFS, 1315 East-West Highway, Silver Spring, MD 20910.

FOR FURTHER INFORMATION CONTACT: Bradley Smith, Alaska Regional Office, NMFS, Anchorage, AK, (907) 271–5006; Michael Payne, Alaska Regional Office, NMFS, Juneau, AK, (907) 586–7236; or Caroline Good, Marine Mammal Division, Office of Protected Resources, NMFS, Silver Spring, MD, (301) 713–2322.

SUPPLEMENTARY INFORMATION:

Background

Right whales in the North Pacific are one of three populations of endangered right whales worldwide. The other populations occur in the North Atlantic and the Southern Hemisphere. The southern right whale is recognized as a separate species but the North Atlantic and North Pacific stocks have heretofore been described as a single species. Recent genetic studies, however, provide conclusive evidence supporting separate species status for these populations, one in the North Atlantic and another in the North Pacific. The International Whaling Commission's (IWC) Scientific Committee formally recognized a three species classification for right whales at its 2000 meeting in Adelaide, Australia. NMFS has reviewed and concurs with the taxonomic changes suggested by the IWC and is working to have the right whale populations listed as distinct species under the Endangered Species Act.

Status of the North Pacific Right Whale

Exploitation: Right whales in the North Pacific historically occurred across the Pacific Ocean north of 35 degrees North latitude, with concentrations in the Gulf of Alaska, eastern Aleutian Islands, southcentral Bering Sea, Sea of Okhotsk, and the Sea of Japan. They were heavily exploited by commercial whaling in the western North Pacific in the 18th and 19th centuries from the Sea of Japan into the Okhotsk Sea, and along the east side of the Kamchatka peninsula. Considerable offshore hunting also occurred eastward of the Kurile Islands as far as 170 degrees East longitude. Right whales were harvested in the eastern North Pacific from the southeastern Bering Sea to, and throughout, the Gulf of Alaska in the 19th and 20th centuries. In the mid 1900s illegal whaling by the Soviets is believed to have decimated the remaining population of right whales in the eastern North Pacific (Doroshenko 2000). Practically all right whaling in the northern hemisphere occurred during summer months.

Abundance and Trends: Data are insufficient to estimate the pre-exploitation size of this population of right whales. However, based upon catch levels, right whale abundance likely exceeded 10,000 animals in the North Pacific. This stock was severely depleted due to commercial and illegal whaling and remains so today. No reliable population estimate presently exists for this stock. Rice (1974) stated that only a few hundred individuals remained in the North Pacific stock and that for all practical purposes this stock was extinct because no sightings of a cow with a calf have been confirmed since 1900. This number has remained in the literature as the maximum number estimated for this stock although fewer than several hundred are believed to remain in the eastern North Pacific. Ferrero *et al.* (2000) indicated that only 14 individual animals were photographed from 1998 though 2000 with 2 re-sightings. This paucity of sightings and re-sightings, despite considerable survey effort, suggests that the population is indeed very small, perhaps in the tens of animals.

Recent Sightings: Prior to 1996 right whale sightings were so rare in the eastern North Pacific that single sightings have resulted in scientific publications (e.g. Carretta *et al.* 1994; Rowlett *et al.* 1994). The paucity of sightings of right whales in the eastern North Pacific was apparent despite high levels of survey effort in the region, notably from Japanese sighting surveys (Miyashita *et al.* 1995). Recent summer sightings of right whales in the eastern Bering Sea (Goddard and Rugh 1998; Tynan 1998, 1999; Tynan *et al.* 2001; Moore *et al.* 2000; LeDuc *et al.* 2001) represent the first reliable observations

of associated groups in the eastern Bering Sea since the 1960s.

Several right whales have been seen each year from NMFS survey platforms since 1996 (NMFS 2000; LeDuc *et al.* 2001). A group of 3–4 right whales was seen on July 30, 1996, in western Bristol Bay, AK (Goddard and Rugh 1998). This group may have included a juvenile animal. In July 1997, a group of 4–5 individuals was encountered in Bristol Bay, followed by a second sighting of 4–5 whales the following morning in approximately the same location and considered to be the same whales (Tynan 1999). Five, six and 13 whales respectively were again found in the same general region of the southeastern Bering Sea in July 1998, July 1999, and July 2000 (LeDuc *et al.* 2001). Genetic samples taken from 6 whales in 1997 (3 individuals) and 1999 (4 individuals with one re-capature) indicated they were all males (LeDuc *et al.* 2001). Of all whales photographed, three each from 1998 and 1999, and seven from 2000 were adequate for individual identification. Among these, the only resightings were a single whale seen in all three years (LeDuc *et al.* 2001) and one whale seen in 1998 and 1999. Additionally, two right whales were observed during a vessel-based survey in the central Bering Sea in July 1999. Eight right whales were seen in July 2000; six were previously unobserved individuals, one was a re-sight and one could not be reliably identified.

Seasonal Movements and Habitat Use: Historical whaling records provide the only information on possible migration patterns and habitat for North Pacific right whales. During the summer whales were found in the Gulf of Alaska, along both coasts of the Kamchatka Peninsula, the Kuril Islands, the Aleutian Islands, the southeastern Bering Sea, and in the Okhotsk Sea. The whales were the most widely dispersed in fall and spring with whales occurring in mid-ocean waters and extending from the Sea of Japan to the eastern Bering Sea. In winter, right whales were found in the Ryukyu Islands (south of Kyushu, Japan), the Bonin Islands, the Yellow Sea, and the Sea of Japan. Current distribution patterns and migration routes of these whales are not known. Historical concentrations of sightings in the Bering Sea together with the recent sightings indicate that this region remains an important summer habitat for eastern North Pacific right whales (Tynan *et al.* 2001). Little is known, however, regarding the current migration patterns of the eastern North Pacific population.

Breeding and Calving: The location of calving grounds for this stock is unknown. Breeding and calving of North Pacific right whales were assumed to have occurred during winter, outside Alaskan waters. Recent observations of courtship behavior do not necessarily indicate this area is used for breeding.

Prey: Right whales in the North Pacific probably feed almost exclusively on calanoid copepods, a type of zooplankton. High concentrations of copepods have been recorded in zooplankton samples collected in 1997 and 1999 near right whales in the North Pacific. Based on historical information, foraging observations, and current information on the foraging distribution of North Atlantic right whales, it is likely that the area where right whales have been observed in the eastern Bering Sea is used for foraging.

Distribution of Feeding Observations Relative to Recent Oceanographic Changes in the Eastern Bering Sea: The Bering Sea has undergone large changes in recent years, attributed in part to climatic change which has resulted in a general warming pattern since the mid 1970s. Unusual blooms of zooplankton have been noted here. Copepod concentrations in the middle shelf domain of the eastern Bering Sea in 1997 were the highest recorded since the early 1980s (Napp and Hunt 2001). A sustained phytoplankton bloom occurred in the southeastern Bering Sea (Napp and Hunt 2001) in 1997. Both of these features persisted at least through 2000. This increased concentration of zooplankton may have attracted feeding right whales to this area. However, the petitioner notes that the presence of these whales in subsequent years, when phytoplankton blooms were not evident, suggests these waters provide productive foraging habitat under varying oceanic conditions. Tynan *et al.* (2001) suggested that right whales in the Bering Sea may have shifted their foraging ground (from the shelf break and deeper waters) in response to the increased densities of prey in the middle shelf.

Status of North Pacific Right Whales Under the Endangered Species Act

Right whales in U.S. waters were listed as endangered under the Endangered Species Conservation Act, the precursor to the ESA, on June 2, 1970 (35 FR 8495; codified at 50 CFR Section 17.11). The species was subsequently listed as endangered under the ESA in 1973, and as depleted under the Marine Mammal Protection Act in the same year. NMFS has the lead responsibility for the recovery program for this species.

NMFS published a Final Recovery Plan for Northern Right Whales (Recovery Plan) in 1991. The 1991 Recovery Plan recommended that a separate plan be prepared for the North Pacific stock ''when population numbers are available'' and further stated that the plan should identify habitats essential or important to survival and recovery. A draft Recovery Plan for the North Pacific population of right whales (NMFS, unpublished) is being prepared and much of the scientific information in this **Federal Register** notice comes from information in the draft Recovery Plan.

NMFS designated critical habitat for northern right whales on June 3, 1994 (59 FR 28793; codified at 50 CFR 226.203). NMFS designated 3 areas in the North Atlantic Ocean off the eastern United States: two feeding and nursery areas in waters off the northeastern United States, and a winter calving and nursery area in waters off the southeastern United States. Not enough information was available to consider critical habitat designation for any other stock of northern right whale including that in the North Pacific at the time of the 1994 designation. The western North Atlantic population was considered the population that stood to benefit most from recovery actions (NMFS 1991).

Response to the Comments Received on the Petition

Section 4(b)(3)(D)(i) of the ESA requires that NMFS, to the maximum extent practicable after receiving a petition to revise existing critical habitat, make a finding as to whether the petition presents substantial scientific or commercial information to demonstrate that the petitioned action may be warranted and publish the finding in the **Federal Register**. If the finding is that substantial scientific information is presented, NMFS is required, within 12 months of the date the petition was received, to make a determination on how to proceed with the requested revision and promptly publish notice of such intention in the **Federal Register**.

On June 1, 2001 (66 FR 29773), NMFS published a notice finding the subject petition contained substantial scientific information indicating that revision of critical habitat for the right whale may be warranted and inviting interested persons to submit comments and information concerning revision. NMFS received over 1,000 letters on the petition during the comment period. The comments are addressed in the following paragraphs.

Comment 1: NMFS received many letters from the public stating that the petitioned area meets the definition of critical habitat because the area is used annually by right whales as an important feeding and courtship area.

Response: Recent NMFS surveys have documented right whales in a relatively small area of the southeastern Bering Sea within the area petitioned as critical habitat (LeDuc *et al.* 2001). Feeding behavior and possible courtship behavior have been observed. While repeated sightings of right whales during NMFS surveys have occurred within the southeastern Bering Sea, NMFS does not find that these observations allow for any extrapolation into the broader area recommended by the petitioner. Rather, the discreteness of the area where right whales have been observed suggests that the entire region is not a biologically homogeneous habitat and, therefore, an assumption cannot be made that right whales would occur throughout a larger area.

The Bering Sea has undergone profound ecological changes over the past decades. These changes have likely resulted in subsequent changes in species composition and distribution among the zooplankton which comprise the primary prey of right whales. Plankton blooms in the eastern Bering Sea have been observed since 1996 and may be the principle reason that right whales have concentrated in this area in recent years. Therefore, the current sighting aggregations may be the result of conditions that have been present for only a few years. Data are very limited on this subject, but the current sighting distribution data do not support the assertion that the entire area proposed by the petitioner as critical habitat contains the physical and biological features essential to the conservation of right whales.

Comment 2: Many commenters indicated that a revision to critical habitat is appropriate because critical habitat would protect right whales from major sources of mortality such as ship strikes and entanglement in fishing gear.

Response: Mortality due to ship strikes and fishing gear entanglement are the two known human-related causes of mortality in the North Atlantic right whale population and are believed to be slowing the recovery of North Atlantic right whales. The commenters, however, assumed that human activities which affect right whales off the eastern United States are the same as those currently affecting right whales in the eastern Bering Sea. The petitioners made similar assumptions.

The distribution of right whales off the eastern United States is congruent with several major shipping ports including the ports of Boston, New York and Jacksonville, among others. Furthermore the areas designated as critical habitat all have major shipping channels running through them.

The likelihood of a vessel striking a right whale in these areas sometime throughout the year, or throughout the lifetime of a whale, is extremely high and this is reflected in the mortality data from recent years. The whales are exposed to a high level of vessel traffic because major shipping channels overlap with calving and foraging grounds.

Conditions in the eastern Bering Sea differ from the East Coast. There are no major ports and no dredged shipping lanes in the area. The major shipping channel runs from Unimak Pass westward below the Pribilof Islands. This is south of the petitioned area and the area where right whales have been sighted in recent years. However, the lack of shipping lanes within the petitioned area does not mean that the whales are free from the risk of ship strike in the surrounding area. Right whales may cross through the Unimak pass shipping lane as they migrate in and out of the Bering Sea. No incident of a ship striking a whale in the eastern Bering Sea has been recorded. The only vessels that routinely operate within the petitioned area are fishing vessels which have no history of striking right whales in the Pacific Ocean.

Many commenters and the petitioner also made similar comments with regard to the likelihood of entanglement in the eastern Bering Sea. Again, most right whales in the North Atlantic have scarring from having been entangled in or come into contact with gillnets or lobster gear. The sighting data in the eastern Bering Sea do not indicate that these whales have similar scarring patterns. No gillnets are used within the petitioned area since they are prohibited by law beyond State waters in Alaska. The principal fisheries in the eastern Bering Sea are the pelagic trawl and crab fisheries. Many of the larger fishing vessels in the eastern Bering Sea are required to have observers, and these observers have never reported an entanglement of a right whale in fishing gear in the eastern Bering Sea. The petitioners refer to an entangled right whale off Kamchatka, Russia; however, NMFS has no information on the circumstances or the gear type that was involved in that entanglement.

Comment 3: Several commenters called for the development of a recovery plan for this species.

Response: NMFS is currently preparing a Recovery Plan for the North Pacific right whale. That plan will present the current status of the species, and provide guidelines for management and research actions necessary to conserve and recover the North Pacific right whale. A draft plan is expected to be available for public comment in 2002.

Comment 4: Several commenters urged NMFS to evaluate and possibly revise the current designated critical habitat for the North Atlantic right whale.

Response: NMFS appreciates the comment to review the current critical habitat designation for the right whale in the North Atlantic. Regulations at 50 CFR 424.12(g) provide for revisions to existing critical habitat designations as new data become available. This recommendation, however, falls outside of the scope of the petitioned action under consideration at this time. NMFS may consider this request following review of existing information under a separate action but it will not be considered as part of this action.

Comment 5: One commenter stated that if additional sightings of right whales are made outside the proposed critical habitat, the boundaries should be altered accordingly.

Response: NMFS cannot concur that any future sightings of right whales would automatically require further revision of the proposed critical habitat. This is inconsistent with the ESA, as critical habitat must meet the definition within that act, as well as being prudent and determinable. The presence of an animal in a given area does not necessarily support designation or revision. NMFS will, however, review any future sightings in light of the ESA criteria to determine if a revision or designation of critical habitat is warranted.

Comment 6: Two commenters stated that recent sightings of right whales in the southeastern Bering Sea allow for the delineation of an area essential to the species which was not known at the time the 1991 Right Whale Recovery Plan was written.

Response: NMFS agrees that designation of critical habitat may be a necessary component of any effort to conserve and recover this species. The ESA contains language that directs NMFS to identify and designate critical habitat, and to revise that designation when necessary. However, NMFS does not believe that a revision of critical habitat is possible at this time based upon existing information identified in the petition.

Comment 7: Several commenters encouraged NMFS to conduct more research, increase funding for this effort, and work toward defining the extent of habitat used by this species.

Response: NMFS agrees that continued research is necessary to fully describe the biology of this species and to identify important and critical habitats. NMFS anticipates that the recent survey effort will continue at similar levels, and that the scope of future investigation may include tagging studies, genetic analyses, photo-identification, long-term acoustic recordings through the use of autonomous bottom-founded hydrophones, and distributional surveys in the Bering Sea outside of the area surveyed during recent efforts.

Comment 8: One commenter urged NMFS to develop regulations for protecting right whales in the North Pacific.

Response: NMFS can consider rule-making independent of a critical habitat designation should such a regulation be required or deemed necessary. However, there is no need for a regulation at this time because there are no activities known to have an adverse effect on right whales in this area.

Comment 9: One commenter stated that the criteria for critical habitat have not been met and that designation is not warranted. The commenter argued that the paucity of sightings and the level of information presently available to describe the biological needs of this species confound any assessment of the petitioned area's importance to the conservation of the right whale.

Response: NMFS agrees that the level of knowledge regarding the biology and habitat needs of the North Pacific right whale are not sufficiently understood to determine whether the physical and biological factors that are essential to the conservation of this species are found throughout the petitioned area. Recent sightings in the southeastern Bering Sea have involved only a relatively small number of whales; however, these individuals may comprise a significant percentage of the remaining population (which may number only in the tens of animals). The presence of these animals within a relatively small region of the Bering Sea over several years strongly suggests that an area considerably smaller than the petitioned area may contain physical features which result in prey aggregations in densities sufficient to be considered essential for the conservation of the North Pacific right whale. However, the extent and persistence of such prey aggregations are unknown at this time. NMFS recognizes that further research is needed to refine the habitat value of the sightings area and the larger continental shelf province.

Comment 10: One commenter disputed the petition's arguments regarding the presence or significance of threats due to ship strikes, entanglement, and habitat degradation.

Response: In addition to collisions with vessels and entanglements, the petition states that dredging, disturbance due to oil and gas development, and industrial noise also pose threats to right whales in this area. (Potential threats posed by shipping and fishing activities are addressed in the response to comment 2.) No dredging occurs in this area and outer continental shelf lease sale activity (for oil and gas development) has not occurred and will not be considered again during the 5–year period from 2002 through 2007. Finally, NMFS completed a comprehensive consultation under section 7 of the ESA in November 2000 on the effects of the groundfish fisheries in the Gulf of Alaska and the Bering Sea on species listed under the ESA (NMFS 2001). Neither cumulative nor action-specific threats were identified in that opinion that would adversely affect the likelihood of survival or recovery for any of the large whale species occurring in this area.

Therefore, NMFS is in general agreement with the commenter's conclusions that the potential threats identified in the petition do not occur presently within the petitioned area at levels that require special management or protective measures. If necessary, protective measures could be enacted through formal or informal consultation under section 7 of the ESA or through regulation independent of critical habitat designation. However, as understanding of North Pacific right whales increases (and if human activity in the area changes) special management considerations may be necessary to protect areas essential to the whale's survival.

Comment 11: One commenter also presented several recommendations for future research on the biology of the North Pacific right whale and the habitat value of the Bering Sea.

Response: NMFS appreciates the recommendations for continued research and for outreach programs to alert fishermen to the significance of right whales in the Bering Sea. Several of these measures have already been incorporated into our research efforts, and others may be considered as the North Pacific Right Whale Recovery Plan is finalized.

Determination on the Petition

The natural history information presented in the petition is largely factual and represents a thorough review of existing data. NMFS, however, disagrees with most of the conclusions and statements made by the petitioners based on that review.

The petition largely bases its recommendations for critical habitat revision on the following points: (1) the Right Whale Recovery Plan calls for the protection of habitat essential to the survival and recovery of this stock; (2) revision would benefit the stock, as it would provide an added layer of protection against harm; and (3)the revision is prudent and determinable as defined under 50 CFR 424.12. Further, in the Executive Summary, the petitioners state that ''the [right whale] recovery team recommended that once areas essential to the conservation of Pacific right whales were identified, those areas should be designated as critical habitat and protected to the full extent of the law.''

NMFS concurs with the first two of these statements, but disagrees that the revision is determinable at this time. Section 3(5)(A)(i) of the ESA defines critical habitat as specific areas (I) ''essential to the conservation of the species'' and (II) ''which may require special management considerations or protection''.

With regard to section 3(5)(A)(i)(I) most of the information on the distribution and abundance of this species comes from historical whaling records and survey sightings since 1996. NMFS has a paucity of information upon which to determine whether the extent of the area petitioned contains ''physical or biological features essential to the conservation of the species.'' Based upon the repeated observations of right whales within a relatively small area of the southeastern Bering Sea, NMFS could perhaps conclude that physical features exist within this area that have resulted in biological features (concentrations of prey) that are essential to the successful foraging of the few right whales that have been sighted in recent years. No data exist, however, to indicate from the sighting distribution or known biology that these features (i.e., prey densities sufficient to lead to right whale aggregations) are found throughout the remainder of the area identified in the petition to designate critical habitat. In fact, the sighting distribution suggests that the essential features attracting right whales are not distributed throughout the petitioned area, and may be unique to

specific locations in the eastern Bering Sea.

The most reasonable conclusion is that a much smaller area than that petitioned may contain physical and biological features that are essential to the conservation of the species, but information is insufficient to extrapolate that conclusion to the entire area petitioned. The lack of a more widespread distribution of these sightings within the petitioned area (or more specifically, the definite clustering of these whales at the same locations since 1996), indicates that the area of sightings is different with regard to successful foraging than the remainder of the area that was identified in the petition.

Another pertinent issue is whether these physical and biological features are permanent or ephemeral. It is not known, based on the literature, whether the zooplankton densities present since 1996 occurred in that location in previous years and, therefore, whether right whale aggregations likewise occurred. Given current population levels, right whales are challenging to detect under almost any circumstances. Nonetheless, right whales have been seen in this area since 1996, and the lack of sightings from any source (there have been numerous vessel surveys in this area since the 1970s that included seabird and marine mammal observers) prior to the mid–1990s would support a conclusion that the whales have recently moved into this area.

If right whales have recently moved into this area, it is possible that the present conditions, which provide sufficient prey densities for foraging, are ephemeral. It would be neither prudent nor beneficial to the species to specify an area as critical habitat only to have the whales aggregate in other unprotected areas in the future. Thus, while the locations where essential features can be found are reasonably well known for the North Atlantic population, such locations and the fidelity of right whales to those locations have not been well established for North Pacific right whales.

With regard to the requirements of section 3(5)(A)(i)(II), NMFS has reviewed all the activities that are present, or may be present, in the petitioned area in the foreseeable future and cannot conclude that the area may require special management considerations. Potential threats from fishing activity, shipping, and oil and gas development do not appear to present any immediate threat to right whales.

Gillnets and lobster gear are the principal gear types implicated in entanglements on the eastern seaboard. Gillnets are not used to fish outside of State of Alaska waters, and are not fished during the period when whales are known to be present in the petitioned area. Therefore, they are unlikely to pose a threat in the petitioned area. Pot gear used in the Bering Sea crab fishery is different from the lobster pot gear that has entangled whales on the East coast. Lobster pots are connected using small-diameter, floating polypropylene line that has a track record of entangling right whales. Bering sea crab gear is different. The pots are much larger, requiring heavier line, and the gear generally does not contain the ''entangling'' features of lobster gear.

Dredging is not an issue in the eastern Bering Sea. Vessel traffic is not a significant issue in the eastern Bering Sea or the petitioned area. Most large vessels move south of the Pribilof Islands. Finally, lease sales for oil and gas exploration are not scheduled for the 2002–2007 period.

NMFS has stated that the primary benefit of specifying critical habitat is notification to Federal agencies that a certain area is crucial to a listed species, allowing agencies to plan projects while considering the listed species and its needs. The principal activity in this petitioned region is a Federally-managed groundfish fishery. NMFS completed a comprehensive consultation under section 7 of the ESA in November 2000 on the effects of the groundfish fisheries in the Gulf of Alaska and the Bering Sea on species listed under the ESA. There were neither cumulative nor action-specific threats identified in that opinion that would adversely affect the likelihood of survival or recovery for any of the large whales in this area.

Until such time that more information becomes available on the occurrence and distribution of this species, NMFS' conclusion is that no special management considerations apply to the entire area being petitioned for critical habitat designation at this time. However, NMFS does recognize that this situation can change. Potential critical habitat may not require special management measures now, but may require special management sometime in the future.

The question then remains whether those features essential to the conservation of the species exist throughout the petitioned area and whether they are ''determinable''.

Regulations at 50 CFR 424.12(a)(2) state that a designation of critical habitat is not determinable when one or both of the following situations exist:

(i) Information sufficient to perform required analyses of the impacts of the designation is lacking, or

(ii) The biological needs of the species are not sufficiently well known to permit identification of an area as critical habitat.

NMFS believes that all required analyses of impacts could be performed. However, NMFS lacks sufficient knowledge of the species' needs to identify critical habitat. Regulations at 50 CFR 424.12 indicate that physical and biological features essential for the conservation of the species include feeding sites. The regulations further state that each critical habitat will be defined by specific limits using reference points and lines as found on standard maps of the area. Ephemeral reference points cannot be used in defining critical habitat.

The area petitioned for critical habitat revision is recognized as a region of the Bering Sea where right whales occurred historically. Also, small, but significant, groups of right whales have been observed in a relatively small area of the southeastern Bering Sea since 1996, and feeding and possible courtship behaviors have been observed. However, the area of the sightings cannot be compared with the area petitioned for revision, or the remainder of the range of the North Pacific right whale, without more comprehensive survey data. Nor could an assessment that this area is essential to the species' conservation be supported.

Given the available information, NMFS concludes that: (1) the information does not indicate that physical or biological features that are essential to the conservation of the species exist throughout the petitioned area; and (2) a much smaller area than the petitioned area may contain such essential features, but the geographic boundaries within which such essential features exist are presently indeterminable. Therefore, at this time NMFS cannot conclude that the petitioned area or any specific region within the petitioned area constitutes critical habitat. The scientific information necessary to make critical habitat ''determinable'' for the eastern Bering Sea stock of right whales is not currently available. Based on the best available information, NMFS has determined that the petitioned action is not warranted at this time.

How Does NMFS Intend to Proceed?

Section 4(b)(3)(D)(ii) of the ESA requires that NMFS, within 12 months of the date the petition was received, make a determination on how to proceed with the requested revision and

promptly publish notification of such intention in the **Federal Register**. NMFS made that determination in a previous paragraph of this notice, however, the agency will continue to analyze the issues raised in the petition in the following manner.

NMFS will continue with planned research activities during 2002 and evaluate any new information to better define the boundaries of an area that may be considered critical. In addition, NMFS will, through the ESA section 7 consultation process, continue to evaluate whether the area may require special management considerations.

To further define an area that might be essential to this population NMFS intends to:

(1) Conduct an extensive vessel-based survey in the eastern Bering Sea during July-August 2002 using experienced observers trained in the use of ''Big Eye'' (5X) binoculars. Additionally, passive acoustic techniques (moored-buoys) will be used to detect whales. If right whales continue to be sighted in the relatively limited area identified by prior sightings then the boundaries of what might be considered essential will be revisited. It is probable that the summer foraging season will be the only season for which NMFS can obtain further information on this population during the next 12 month period.

(2) If feasible, attempt to satellite-tag North Pacific right whales to determine movement patterns and distribution, at least during late summer and fall. NMFS anticipates that the whales are not going to remain in one spot as the foraging season ends and fall-winter movements occur. However, whether the population remains in the petitioned area or moves south off the shelf is not known.

(3) Re-examine all genetic information to determine whether the eastern Bering Sea stock and Sea of Okhotsk stock of North Pacific right whales can be differentiated genetically. However, it should be re-emphasized that these stocks are currently considered one species under the ESA and treated as such. There are so few samples available for such an analysis that it is doubtful that NMFS will be able to determine any further similarities or dissimilarities between the two stocks even if they exist.

(4) Conduct an economic analysis (as required by the ESA) on any critical habitat area that may be proposed by NMFS.

(5) Continue to examine historical and newly acquired data to determine whether any area, not just the petitioned area, should be proposed as critical habitat for North Pacific right whales.

All references are available upon request (See **FOR FURTHER INFORMATION CONTACT**).

Authority: 16 U.S.C. 1531, *et seq.*

Dated: February 13, 2002.

William T. Hogarth,

Assistant Administrator for Fisheries, National Marine Fisheries Service.

[FR Doc. 02–4087 Filed 2–19–02; 8:45 am]

BILLING CODE 3510–22–S

Proposed Rules

Federal Register
Vol. 67, No. 34
Wednesday, February 20, 2002

This section of the FEDERAL REGISTER contains notices to the public of the proposed issuance of rules and regulations. The purpose of these notices is to give interested persons an opportunity to participate in the rule making prior to the adoption of the final rules.

DEPARTMENT OF HEALTH AND HUMAN SERVICES

Food and Drug Administration

21 CFR Part 872

[Docket No. 01N–0067]

Dental Devices: Classification of Encapsulated Amalgam Alloy and Dental Mercury and Reclassification of Dental Mercury; Issuance of Special Controls for Amalgam Alloy

AGENCY: Food and Drug Administration, HHS.

ACTION: Proposed rule.

SUMMARY: The Food and Drug Administration (FDA) is proposing three actions that will provide consistent regulation of dental mercury and dental amalgam products. FDA is proposing to issue a separate classification regulation for encapsulated amalgam alloy and dental mercury, a preamendments device, intended to be mixed in a single-use capsule to form filling material for the treatment of dental caries as class II (special controls); to amend the classification for amalgam alloy, a class II preamendments device, by adding special controls; and to reclassify from class I (general controls) to class II the preamendments device dental mercury intended for use as a component of amalgam alloy in the restoration of a dental cavity or broken tooth. These actions are being taken because the agency believes that there is sufficient information to establish special controls that will provide reasonable assurance of the safety and effectiveness of these devices. Elsewhere in this issue of the **Federal Register**, FDA is announcing the availability for comment of a draft guidance document that is proposed as a special control.

DATES: Submit written or electronic comments by May 21, 2002. See section XI of this document for the proposed effective date of a final rule based on this document.

ADDRESSES: Submit written comments to the Dockets Management Branch (HFA–305), Food and Drug Administration, 5630 Fishers Lane, rm. 1061, Rockville, MD 20057. Submit electronic comments to http://www.fda.gov/dockets/ecomments.

FOR FURTHER INFORMATION CONTACT: Susan Runner, Center for Devices and Radiological Health (HFZ–410), Food and Drug Administration, 9200 Corporate Blvd., Rockville, MD 20850, 301–827–5283.

SUPPLEMENTARY INFORMATION:

I. Highlights of the Proposed Regulation

In light of the information described below, FDA has reconsidered its regulatory approach to dental amalgam products. FDA is proposing to regulate amalgam products in a uniform manner, and apply class II special controls to these products to provide a reasonable assurance of safety and effectiveness. Specifically, FDA is proposing to:

1. Issue a separate classification regulation for encapsulated amalgam alloy and dental mercury. This product would be class II with special controls consisting of conformance to voluntary industry standard specifications in the following: (1) International Standards Organization ''(ISO) 1559:1995 Dental Materials–Alloys for Dental Amalgam,'' and (2) American National Standards Institute/American Dental Association (ANSI/ADA) ''Specification No. 6–1987 for Dental Mercury'' and FDA's guidance document entitled ''Special Control Guidance Document on Encapsulated Amalgam, Amalgam Alloy, and Dental Mercury Labeling.''

2. Reclassify dental mercury from class I to class II with special controls consisting of conformance to voluntary industry standard specifications in ANSI/ADA's ''Specification No. 6–1987 for Dental Mercury'' and FDA's guidance document entitled ''Special Control Guidance Document on Encapsulated Amalgam, Amalgam Alloy, and Dental Mercury Labeling.''

3. Amend the class II classification regulation of amalgam alloy to provide for special controls consisting of conformance to voluntary industry standard specifications in ''ISO 1559:1995 Dental Materials—Alloys for Dental Amalgam'' and FDA's guidance document entitled ''Special Control Guidance Document on Encapsulated Amalgam, Amalgam Alloy, and Dental Mercury Labeling.''

II. Background (Regulatory Authorities)

The Federal Food, Drug, and Cosmetic Act (the act) (21 U.S.C. 301 *et seq.*), as amended by the Medical Device Amendments of 1976 (the 1976 amendments) (Public Law 94–295), the Safe Medical Devices Act of 1990 (the SMDA) (Public Law 101–629), and the Food and Drug Administration Modernization Act of 1997 (Public Law 105–115) established a comprehensive system for the regulation of medical devices intended for human use. Section 513 of the act (21 U.S.C. 360c) established three categories (classes) of devices, depending on the regulatory controls needed to provide reasonable assurance of their safety and effectiveness. The three categories of devices are class I (general controls), class II (special controls), and class III (premarket approval).

Under the 1976 amendments, class II devices were defined as those devices for which there is insufficient information to show that general controls themselves will assure safety and effectiveness, but there is sufficient information to establish performance standards to provide such assurance. The SMDA broadened the definition of class II devices to mean those devices for which there is insufficient information to show that general controls themselves will assure safety and effectiveness, but there is sufficient information to establish special controls to provide such assurance. Special controls may include performance standards; postmarket surveillance; patient registries; and the development, and dissemination of guidelines, recommendations, and any other appropriate actions the agency deems necessary (section 513(a)(1)(B) of the act).

Under section 513 of the act, devices that were in commercial distribution before May 28, 1976 (the date of enactment of the amendments), generally referred to as preamendments devices, are classified after FDA has: (1) Received a recommendation from a device classification panel (an FDA advisory committee); (2) published the panel's recommendation for comment, along with a proposed regulation classifying the device; and (3) published a final regulation classifying the device.

FDA has classified most preamendments devices under these procedures.

Devices that were not in commercial distribution prior to May 28, 1976, generally referred to as postamendments devices, are classified automatically by statute (section 513(f) of the act) into class III without any FDA rulemaking process. Those devices remain in class III and require premarket approval, unless and until FDA issues an order finding the device to be substantially equivalent, under section 513(i) of the act, to a predicate device that does not require premarket approval. The agency determines whether new devices are substantially equivalent to previously marketed devices by means of premarket notification procedures in section 510(k) of the act (21 U.S.C. 360(k)) and part 807 of the regulations (21 CFR part 807).

A preamendments device that has been classified into class III may be marketed, by means of premarket notification procedures, without submission of a premarket approval application (PMA) until FDA issues a final regulation under section 515(b) of the act (21 U.S.C. 360e(b)) requiring premarket approval.

Reclassification of classified preamendments devices is governed by section 513(e) of the act. This section provides that FDA may, by rulemaking, reclassify a device (in a proceeding that parallels the initial classification proceeding) based upon ''new information.'' The reclassification can be initiated by FDA or by the petition of an interested person. The term ''new information,'' as used in section 513(e) of the act, includes information developed as a result of a reevaluation of the data before the agency when the device was originally classified, as well as information not presented, not available, or not developed at that time. (See, e.g., *Holland Rantos* v. *United States Department of Health, Education, and Welfare*, 587 F.2d 1173, 1174 n.1 (D.C. Cir. 1978); *Upjohn* v. *Finch*, 422 F.2d 944 (6th Cir. 1970); *Bell* v. *Goddard* 366 F.2d 177 (7th Cir. 1966). Reevaluation of the data previously before the agency is an appropriate basis for subsequent regulatory action where the reevaluation is made in light of changes in ''medical science.'' (See *Upjohn* v. *Finch*, supra, 422 F.2d at 951.) However, regardless of whether data before the agency are past or new data, the ''new information'' on which any reclassification is based is required to consist of ''valid scientific evidence,'' as defined in section 513(a)(3) of the act and § 860.7(c)(2) (21 CFR 860.7(c)(2)). FDA relies upon ''valid scientific evidence'' in the classification process to determine the level of regulation for devices. For the purpose of reclassification, the valid scientific evidence upon which the agency relies must be publicly available. Publicly available information excludes trade secret and/or confidential commercial information, e.g., the contents of a pending PMA. (See section 520(c) of the act (21 U.S.C.360j(c)).

III. Regulatory History of the Devices

Dental amalgam is a dental restorative material that is used as filling material in the treatment of dental caries. Dental amalgam is a mixture of approximately equal parts of elemental mercury (43 to 54 percent) and an amalgam alloy containing other metals, predominately silver, but also tin and copper, with smaller amounts of zinc, palladium, or indium sometimes present. The mercury and amalgam alloy components are mixed in the dentist's office to form dental amalgam. FDA has regulated dental mercury and amalgam alloy separately, with dental mercury § 872.3700 (21 CFR 872.3700) being regulated as a class I device and amalgam alloy § 872.3050 (21 CFR 872.3050) as a class II device.

In the **Federal Register** of December 30, 1980 (45 FR 85962), FDA published a proposed rule to classify dental mercury (§ 872.3700) into class II, based on the recommendation of the panel. Subsequently, in the **Federal Register** of August 12, 1987 (52 FR 30082 at 30089), FDA issued a final rule classifying dental mercury into class I instead of into class II, as proposed. FDA stated that it believed that, at that time, there was no valid scientific evidence of systematic poisoning to patients from amalgam containing mercury to justify classifying the device into class II (see 52 FR 30082 at 30089).

Although the agency acknowledged the risks presented by dental mercury (i.e., mercury poisoning and adverse tissue reaction), the agency believed that general controls, including labeling for the device bearing adequate directions for use and warnings under section 502 of the act (21 U.S.C. 352), would warn dentists about the rare risks of allergic reactions among patients and the risk of toxicity to dental health professionals. The agency concluded that the establishment of performance standards for these devices would not reduce these risks. Accordingly, FDA found that general controls alone were sufficient to provide reasonable assurance of the safety and effectiveness of the device. In the same issue of the **Federal Register**, FDA classified amalgam alloy into class II because of the potential risks to safety and effectiveness that could result from variations in chemical formulation related to percent composition and types of materials.

In the **Federal Register** of August 12, 1987 (52 FR 30082) and November 20, 1990 (55 FR 48436), FDA classified a total of 124 preamendments generic types of dental devices, including dental mercury (§ 872.3700) and amalgam alloy (§ 872.3050). Due to an inadvertent error, the preamendments device encapsulated amalgam alloy and dental mercury, was not separately classified. Encapsulated amalgam alloy and dental mercury is a device that consists of measured proportions of amalgam alloy and dental mercury, both separately sealed, but within the same single-use capsule, ready to be triturated to form an amalgam alloy filling material for use in the restoration of a dental cavity. Encapsulated amalgam alloy and dental mercury are now regulated as class II devices under the amalgam alloy classification (§ 872.3050).

IV. Scientific Review Related to Dental Mercury and Amalgam

A. Comprehensive Assessment of Dental Amalgam by the United States Public Health Service

In 1991 to 1992, under the auspices of the Committee to Coordinate Environmental Health and Related Programs (CCEHRP), the U.S. Public Health Service (PHS), a component of the Department of Health and Human Services (HHS), performed a comprehensive risk assessment of dental amalgam.

The PHS performed this comprehensive risk assessment because of heightened public concern about the safety of this product as a result of anecdotal reports of mercury toxicity from amalgam fillings and the alleviation of chronic disease conditions when the fillings were removed. These reports and the public's reaction to them prompted senior PHS officials to order a fresh look at all relevant data to determine if such safety concerns had any basis in fact. In 1993, a CCEHRP Subcommittee on Risk Management issued a report on its findings (Ref. 1) (hereinafter referred to as the PHS report).

In preparing this assessment, the CCEHRP relied upon a number of scientific review groups that included clinicians, scientists, and public health experts from the PHS, the Environmental Protection Agency, and the health care and academic sectors (Ref. 1). One group referred to as the Ad Hoc Subcommittee on the Benefits of

Dental Amalgam (hereinafter referred to as the Benefits Assessment Subcommittee), assessed the benefits of dental amalgam. A separate group, the Subcommittee on Risk Assessment (hereinafter referred to as the Risk Assessment Subcommittee), examined the potential health risks associated with dental amalgam restorations.

The Risk Assessment Subcommittee, comprised of 34 senior level experts from the fields of health promotion and disease prevention, dentistry, dental materials, toxicology, and biostatistics, reviewed the existing body of scientific literature (Ref. 1). It examined nearly 120 publications that reported the results of studies on levels of exposure to mercury and its salts. In conducting its review, the Risk Assessment Subcommittee paid close attention to the amount of mercury absorbed by study subjects and the consequences, if any, of lifetime exposure among people with dental amalgam restorations (Ref. 1).

The Risk Assessment Subcommittee found that historic experience with dental amalgams did not offer persuasive evidence of adverse health effects related to amalgam treatments other than a few reported cases of hypersensitivity (Ref. 1). In terms of evidence concerning adverse effects of low level, long-term mercury exposure, the Risk Assessment Subcommittee reviewed studies that reported neurological and psychological changes resulting from long-term, low-level mercury exposure. The Risk Assessment Subcommittee could not draw unambiguous conclusions or develop a risk assessment based on these endpoints because these studies were judged to have serious methodological flaws (Ref. 1).

Given the shortcomings of the occupational studies, the Risk Assessment Subcommittee also decided against using occupational exposure data as the basis for establishing an acceptable level of exposure to long-term, low-level mercury vapor: in other words, the Risk Assessment Subcommittee recommended against a ''no observed adverse effect level'' (Ref. 1).

Based on its review, the Risk Assessment Subcommittee arrived at four general conclusions:

1. In low-level occupational exposure, the subclinical effects detected have occurred in groups with mean tissue mercury levels that are only tenfold higher than those of the general population. However, the relationship between the observed effects and the tissue levels is unclear, as is the relationship between subclinical effects and a hazard to health.

2. Available data are not sufficient to indicate that health hazards can be identified in nonoccupationally exposed persons. Because there are no scientifically acceptable studies with sensitive, standardized measurements for physiological and behavioral changes in nonoccupationally exposed persons, it is not possible to determine whether those changes observed in persons with low-level occupational exposure to mercury might also occur as a result of exposure to mercury from dental amalgams. Adverse health consequences, however, cannot be totally dismissed.

3. The margin of safety may be lower in some individuals because of previously developed sensitivity to mercury or because body burdens of mercury are already high as a result of past exposure to other sources. It is possible, therefore, that some persons may respond adversely to the incremental exposure derived from dental amalgam restorations.

4. At the mercury doses produced by amalgam fillings, the evidence is not persuasive that the wide variety of nonspecific symptoms attributable to fillings and ''improvement'' after their removal are ascribable to mercury from the fillings. Conversely, the evidence is not persuasive that the potential for toxicity at the levels attributable to dental amalgams should be totally disregarded. The potential for effects at levels of exposure produced by dental amalgam restorations has not been fully explored (Ref. 1).

In addition to examining the risks of dental amalgam, a companion PHS subcommittee reviewed the benefits of this product (PHS report Ref. 1). It concluded that dental amalgam, which has been used successfully to treat millions of individuals for over 100 years, is an effective restorative material that offers many advantages over other materials. These advantages include wide potential applications, ease of manipulation, reasonable clinical serviceability, and relatively low cost. These findings, which are discussed in greater detail later in this document, were subjected to external review and found to be highly credible (Ref. 1).

On the basis of the assessment of available science on the risks and benefits of amalgam products, the PHS report recommended that FDA, the National Institute of Health, Centers for Disease Control and Prevention, Office of the Assistant Secretary for Health, and the National Institute of Dental Research implement a comprehensive strategy to address concerns about amalgam products. Specifically, the PHS report recommended the development of a research agenda, a method to monitor research, and a public and professional educational campaign. The PHS report also recommended that FDA carry out the following regulatory initiatives: (1) Combine elemental mercury and dental alloy, which are presently regulated separately, into a single product for regulatory purposes; (2) require manufacturers of all dental restorative materials, including dental amalgam, to label their products with the ingredients to help dentists identify patients who may exhibit allergic hypersensitivity to these substances; and (3) encourage dentists and patients to report to FDA adverse effects from all restorative materials. (Ref. 1).

The HHS Environmental Health Policy Committee, the successor to the CCEHRP, met in mid-1995 and reaffirmed the findings and policy approaches outlined in the 1993 PHS report (Ref. 2).

B. Citizen Petitions

In 1993, several individuals filed citizen petitions related to the regulation of dental amalgam and dental mercury (Ref. 3). These petitions requested that FDA take numerous actions with respect to dental amalgam and mercury, including banning dental mercury, reclassifying dental mercury into class III, imposing restrictions on amalgam, conducting environmental assessments and issuing environmental policy statements, issuing policy statements addressing patients and health care workers, and convening a special panel to review the merits of these requests.

The petitioners submitted numerous scientific publications they believed supported the conclusion that dental mercury and amalgam were unsafe. FDA convened a group of experts to assess these additional studies. After reviewing the additional studies cited in the petitions, the group of experts did not find that any of the studies supported claims that individuals with dental amalgam fillings will experience adverse effects including neurologic, renal, or developmental effects. Their conclusions concerning the risks of amalgam were consistent with the conclusions in the 1993 and 1995 PHS reports. (Ref. 4).

After review of the existing information about the safety of dental amalgam and mercury, including additional information cited by petitioners, FDA responded that it intended to propose to place amalgam products into class II, not class III. FDA

further responded that it did not intend to ban mercury or impose restrictions on the use of amalgam products by certain subpopulations (Ref. 5).

C. U.S. Government Research

The U.S. Government has funded several studies related to dental amalgam. Since 1982, a large-scale epidemiological study, commonly referred to as the ''Ranch Hand Study,'' has been continuing to assess the possible links between exposure of the U.S. military personnel to the herbicide Agent Orange, used during the Vietnam War, and reported health effects. The extensive medical and oral health database developed in support of this study, drawn from approximately 1,200 study participants, made it possible for persons with different research interests to use selected data in the pursuit of their own studies. Oral health information, dental records from military archives, and measures of mercury levels in blood and urine samples enabled the National Institute of Dental and Craniofacial Research to initiate a two-pronged study. One aspect of the study entailed the establishment of mercury levels from amalgam fillings and the occurrence of various reported health symptoms. The other aspect involved a longitudinal cohort assessment in which the number of amalgam restorations were determined retrospectively and comparisons made of reported health effects between groups with high and low exposure levels and those with no exposure. To date, no discernible causal or correlational connection has been observed between study subjects with amalgam fillings and adverse health effects. The period of observation is continuing. The government has sponsored several other continuing studies that relate to amalgam fillings with results anticipated in 2003.

D. International Reviews on Safety of Amalgam Fillings

There have been a number of major reviews by international authorities of the nature and magnitude of health risks associated with dental amalgam restorations. The majority of these assessments are based upon extensive reviews of the available body of relevant scientific literature and consensus among leading researchers and renowned experts from the fields of oral health, toxicology, medicine, and other related disciplines. The following overview identifies these individual reviews and provides the overall conclusions of each.

In 1994, an expert group convened by Sweden's National Board of Health and Welfare took the position that: ''Scrutiny of the results of recent research * * * has not shown that mercury from amalgam has an adverse effect on health, with the exception of isolated cases of allergic reactions'' (Ref. 6).

At the request of senior U.S. health officials, in 1994, a delegation of PHS scientists and regulators organized a nine-country information exchange forum in Berlin, Germany for the purpose of determining the scientific bases for national policies governing the use of dental amalgam. In 1998, a report memorializing the conclusions of this group was published. The report concluded that: (1) No systemic dose-dependent toxic effects have been shown to be related to amalgam; (2) local reactions to dental amalgam fillings do occur but are relatively rare; (3) the benefits of restoring teeth with dental amalgam outweigh significantly the documented risks; and (4) there is no indication that clinically satisfactory dental amalgam fillings should be removed (Ref. 7).

In 1995, Canadian health authorities released a report on amalgam safety (Ref. 8), which concluded:

> Dental amalgam contributes detectable amounts of mercury to the [human] body, and is the largest source of mercury exposure for average Canadians. However, this exposure is not causing illness in the general population. Current evidence does not indicate that mercury contributes to Alzheimer's disease, amyotrophic lateral sclerosis, multiple sclerosis or Parkinson's disease.

In 1996, the University of Otego's Wellington School of Medicine in New Zealand, which serves as the World Health Organization (WHO) Collaborating Centre in Oral Health, enlisted four prominent researchers to conduct a review of available scientific reports on amalgam safety. In a draft report, three of the researchers concluded: ''* * * the assumption of a cause-and-effect relationship between amalgam and cases of ill health is evidence of an overreaction and unwise, considering the endemic prevalence of amalgam in the population'' (Ref. 9).

In 1997, the Canadian province of Quebec undertook its own evaluation of the state of the science relating to amalgam safety. Taking a somewhat equivocal stance, Quebec authorities stated:

> The mainstream scientific view holds that mercury exposure, even at very low levels attributable to dental amalgam, might be affecting people adversely, but the evidence currently available is inadequate to determine if this is the case. Existing evidence is weak, but the information base is inadequate to conclude that dental amalgam has no effects that might be of concern (Ref. 10).

In early 1997, WHO convened a ''consultation meeting'' at its headquarters in Geneva, Switzerland to re-visit WHO's policy on dental amalgam use with the current science. In attendance were government officials, scientists, and representatives from the dental profession and dental trade industry from 10 of the world's major industrialized nations and 2 of WHO's regional offices. At the end of this meeting, the participants issued the following consensus statement:

> Dental amalgam restorations are considered safe, but components of amalgam and other dental restorative materials may, in rare instances, cause local side effects or allergic reactions. The small amount of mercury released from amalgam restorations, especially during placement and removal, has not been shown to cause any other adverse health effects. (Ref 11).

In 1997, the Oral Health section of WHO's Division of Non-Communicable Diseases issued a publication based upon the working papers and presentations by participants at the 1997 WHO conference noted above. The publication included and gave WHO sanction to the consensus statement adopted by the participants at the 1997 WHO consultation meeting and provided supporting technical and scientific evidence on a wide range of discrete issues relating to dental amalgam (Ref. 11).

For example, in a section entitled ''Direct Restorative Dental Materials in Oral Health Care Amalgam, Composites and Glass Ionomers,'' the document states:

> Expert groups, convened by the Swedish National Board of Health and Welfare and the Swedish Medical Research Council (SOS, 1987) and the Department of Health and Human Services, USA (1993), have studied possible health effects of the use of mercury-containing amalgam. These study groups concluded that while it is well documented that individuals with amalgam fillings have higher concentrations of mercury in all tissues studied than those who have no amalgam fillings, there is no direct evidence of an adverse effect of mercury from amalgam tooth fillings on general health (Ref. 11).

In the section titled ''Toxic and Allergenic Risks Due to Dental Biomaterials'', the document states:

> Mercury from dental amalgam has been accused of being a toxic agent causing serious consequences to health, including various sclerosis, Alzheimer's disease, myalgic encephalitis, epilepsy, etc. without any proof having ever been presented. On the other hand, we know that certain allergies to mercury are involved in the appearance of lichenoid reactions, even if they are not the only responsible cause. The very rare epidemiological estimation of risk of allergy gives us percentages that go from 0.04% to

0.00001%. In this respect, the present data concerning mercury are perfectly characteristic of the risks of chronic intoxication and of allergies caused by dental therapies, i.e., extremely low (Ref. 11).

A third paper presented in the WHO publication entitled ''Mercury Exposure From Dental Amalgam Fillings: Absorbed Dose and the Potential for Adverse Health Effects'' stated: ''It is concluded that no signs of renal toxicity could be found in conjunction with mercury released from amalgam fillings.'' Additionally, the paper recited the findings of a number of researchers who conducted studies on human subjects with symptoms allegedly caused by amalgam fillings. One study found that: ''No symptom group had a higher estimated daily uptake of inhaled mercury vapor, or any higher mercury concentrations in blood and urine than the control group.'' Another study reported:

> No significant differences regarding release of mercury vapor [sic] from the amalgam fillings before and after gum-chewing between the test subjects and the matched controls in a few spot measurements were found. Furthermore, no significant differences were found regarding urinary mercury levels and total excretion of proteins in urine. No damage in renal function was noted.

Yet another study cited in the WHO document found ''* * * no correlation between the total number of amalgam surfaces and fatigue, a symptom described as a mercury toxicity symptom'' (Ref. 11).

December 1998 marked the culmination of a 2-year long study by an ad hoc working group constituted by the European Commission (the Commission) on amalgam safety and regulatory policies among the Commission's 15 member states. Comprised of leading dental professionals, researchers, and academics from western Europe, and with oversight by the Commission's medical devices expert group, the ad hoc working group issued a comprehensive assessment containing a number of conclusions, as follows:

> In recent years, toxicological and biocompatibility aspects of dental amalgam have been reviewed extensively, both nationally and internationally, and risk analyses carried out. Currently available data indicate that mercury from dental amalgam will not cause an unacceptable health risk to the general population. * * * levels of mercury found in tissues, blood and urine and associated with dental amalgam fillings are considerably below the levels at which systemic dependent toxic effects have been shown to occur * * *. The hypothesis that there is a significant toxicological risk from dental amalgam fillings cannot be substantiated by the available evidence * * *. Local reactions to dental amalgam fillings and other dental restorative materials do occur but are relatively rare * * *. There is no scientific evidence that the use of dental amalgam is related to adverse effects on pre- and post-natal health or fertility.

Although there is not complete unanimity within the world community on either the potential health consequences arising from the use of dental amalgam or the appropriate posture that national health authorities should take with respect to regulating its use, there is overwhelming agreement among major health authorities that have assessed these risks that there is no evidence of a serious threat to the general population whose dental caries are treated with amalgam (Ref. 11).

Notwithstanding general international consensus about the level of risk, some Nordic countries, such as Denmark, Finland, Norway, and Sweden, have placed legal restrictions on dental amalgam for environmental concerns (Refs. 7 and 11). In addition, several European countries have taken very conservative approaches.

V. 1993 and 1994 Panel Meeting Concerning Encapsulated Amalgam Alloy and Dental Mercury

The Dental Products Panel (hereinafter referred to as the Panel) met on December 1, 2, and 3, 1993, and June 29, 1994, to discuss amalgam products. In addition to testimony from FDA staff, the Panel heard testimony from representatives of ADA, the American Dental Trade Association, and PHS. The Panel also reviewed the 1993 PHS report and an updated literature review. FDA requested that the Panel make a classification recommendation only on the encapsulated dental amalgam alloy and mercury.

After considering this testimony and information, the Panel unanimously recommended to classify encapsulated amalgam alloy and mercury for the restoration of teeth into class II. Specifically, the Panel recommended voluntary performance standards that could be issued by a group such as the Association for the Advancement of Medical Instrumentation (AAMI), voluntary testing guidelines, education, that the product be used only upon the written or oral authorization of a practitioner licensed by law to administer or use the device, and that the device be used only by persons with training or expertise in its use (Ref. 12).

A. Identification

The Panel identified encapsulated amalgam alloy and mercury as a device composed of elemental mercury and amalgam alloy separated by a septum, which when placed in a dental amalgamator produces dental amalgam that is intended for the restoration of teeth. This product is hereinafter referred to in this document as encapsulated alloy/mercury.

B. Classification Recommendation of Encapsulated Alloy/Mercury

Class II (special controls): The Panel recommended that the establishment of special controls be a medium priority.

C. Summary of the Reasons for the Panel's Recommendation for Encapsulated Alloy/Mercury

The Panel, after considering the persons for whom the generic device is intended, and the proposed conditions for use for the generic device, gave the following reasons in support of its recommendation to classify the encapsulated alloy/mercury into class II.

1. General controls by themselves are insufficient to provide a reasonable assurance of the safety and effectiveness of the device.
2. There is sufficient information to establish special controls to provide reasonable assurance of safety and effectiveness.
3. Special controls will provide a reasonable assurance of safety and effectiveness.

D. Summary of Data on Which the Panel's Recommendation Is Based

The Panel based its recommendation on the review of the PHS report, other published literature, on expert testimony presented to the Panel, and on the Panel member's personal knowledge of, and experience with, the devices. The PHS report has been summarized under section IV.A of this document.

The Panel also reviewed a wide range of literature during its deliberation on the classification of encapsulated alloy/mercury in addition to the data described in the PHS report. The majority of the literature reviewed states that there is no compelling reason to change the current usage patterns of dental amalgam. There is, however, acknowledgement that continued research in the area is prudent. The following paragraphs describe specific information detailing the literature.

One of the articles reviewed indicated that mercury vapor is released from amalgam restorations. This article stated that there is release of mercury vapor from restorations during chewing, tooth brushing, and other oral activities. The author, however, indicated that there is insufficient knowledge about the metabolism of mercury vapor in the human to predict the health significance

of chronic exposure to this source of mercury (Ref. 13).

Another article reviewed by the panel demonstrated that mercury vapor can be analyzed in the oral cavity, especially following removal of amalgams, and during the setting and polishing of the amalgam. This study also demonstrated a significant direct correlation between the size of the amalgam restoration and the amount of vapor released. The study, however, concludes that mercury vapor exposure is of short duration and infrequent and is well below the exposure limits that are considered harmful (Ref. 14).

Another article indicated that although there is evidence of mercury vapor released from amalgam restorations there is no proof of a causal link of this specific source of the heavy metal to any major human health problem (Ref. 15).

One article indicated that Dental Amalgam remains one of the most versatile restorative materials in use (Ref. 16). The article further stated that certain measures should be instituted to assure patient and health care professional safety. These include the potential for chemical sensitivity to any of the elements and compounds found in dental amalgam. Similar concerns were also raised in the PHS report. The article reported that the chemical sensitivity response to specific compounds and elements in a dental amalgam are no different than other sensitivity reactions (Ref. 16). It further stated that evidence suggests that sensitivities to chemicals can occur within a small portion of the population.

Several articles addressed the benefits versus the risks of dental amalgam, and these articles agreed that, although dental amalgam can release minute amounts of elemental mercury, occupational studies indicate that the severity of response to this heavy metal follows a dose response pattern (Refs. 16 and 17). A dose response effect has not been demonstrated at a level of exposure associated with dental amalgams (Refs. 16 and 18). It also is noted that mercury is absorbed from many sources, including food and air, and there has been no demonstration that most people experience any clinical effects from this small additional body burden of mercury from amalgams (Ref. 16). The articles also stated that if there are adverse health effects from mercury in dental amalgam they may be so subtle and nonspecific that they would be difficult to detect, and noted that true allergies to dental amalgam rarely have been reported but do exist (Refs. 16 and 19).

One article directly examined the claims of mercury poisoning from dental amalgam (Ref. 19). This article and others concluded that although it is not possible to completely rule out adverse effects in a minority of susceptible patients, there is insufficient evidence to justify claims that mercury from dental amalgam restorations has an adverse effect on health on the vast majority of patients (Refs. 16 and 19). Other articles indicated that, although mercury vapor in high concentrations can have deleterious effects on organ systems, there is no evidence of risk at the levels generated by chewing with amalgam restorations (Refs. 13 and 15). The regulatory issues related to amalgam were addressed in one article. This article emphasized the need for continued surveillance and the need for practitioner input to report problems in performance with dental devices (Ref. 20).

E. Risks to Health

The Panel stated that there were no major risks associated with encapsulated amalgam alloy/mercury when used as directed, but recognized there was a small population of patients that may demonstrate allergic reactions to the materials in amalgam. The Panel noted that improper usage of the product also presented risks associated with mercury toxicity. The Panel specifically identified improper storage, trituration, and handling as contributing to this risk.

VI. The Proposed Rule

FDA is proposing classification actions in this document for dental mercury and dental amalgam products. FDA believes that the uniform regulation of all these products as class II devices, and the application of certain uniform special controls is appropriate, given the same risks are presented by the potential toxicity of mercury in each of these devices. This approach is consistent with the recommendation in the PHS report to regulate these products in a uniform manner. FDA believes that sufficient information exists to develop special controls, which will provide reasonable assurance of the safety and effectiveness of these devices.

With respect to encapsulated alloy/mercury, FDA agrees with the Panel's recommendation and is proposing that this product be classified into class II (special controls). Specifically, FDA is following the Panel's recommendation and proposing that labeling guidance and relevant recognized voluntary consensus standards be applied as special controls to these products.

FDA is also proposing to reclassify dental mercury as identified in § 872.3700 from class I to class II with labeling guidance and a relevant recognized voluntary consensus standard as special controls.

Lastly, FDA is proposing to add labeling guidance and a relevant voluntary consensus standard as special controls for the existing class II device, amalgam alloy, as identified in § 872.3050. Currently, no performance standard or other special controls are designated for amalgam alloy.

A. Information FDA Reviewed Before Issuing This Proposal

Before making this proposal, FDA carefully examined extensive information about the safety and effectiveness of dental restorative materials that contain mercury. As stated previously, public concern about the safety of dental amalgam engendered several national and international comprehensive reviews of scientific information about the risks and benefits of these products. FDA examined the 1993 and 1995 PHS reports, information presented to the Panel and the Panel's recommendations, information submitted in support of citizen petition's requests, and numerous reports of international health organizations and foreign countries that conducted comprehensive risk assessments of dental products that contain mercury.

In preparing the 1993 and 1995 PHS reports described in section IV.A of this document, the experts convened by the PHS conducted a comprehensive review of the scientific literature to assess the benefits and risks posed by dental restorative materials containing mercury (Ref. 1). In assessing the benefits of these products, the Benefits Assessment Subcommittee performed a literature search using the Medline system (Ref.1). The scientific material reviewed for this report included well-qualified, prospective studies using objective assessment methods; cross-sectional studies reporting data for a given point or points in time; retrospective studies reporting the longevity of dental restorations; and articles published in peer-reviewed scientific journals (Ref. 1).

In assessing the risks associated with dental restorative materials containing mercury, the Risk Assessment Subcommittee viewed the body of significant literature that described the evidence for possible health effects produced from exposure to mercury from dental amalgam (Ref. l). The Risk Assesment Subcommittee reviewed an extensive number of studies relating to

possible risks presented by amalgam, including studies relating to: Mercury forms, intake, uptake, metabolism and excretion; human exposure to mercury from dental amalgam; factors affecting estimates of daily intake of mercury vapor from dental amalgam; intraoral mercury vapor production and estimation of daily intake; mercury levels in body fluid; human and animal uptake of mercury from dental amalgam; hazard identification; human exposure and response; occupational hazards presented by dental amalgam exposure; hypersensitivity; psychological outcomes associated with mercury levels in body fluids; and mercury residues in neurological patients (Ref. 1). The PHS updated its review of scientific literature on risks and benefits and issued a new report in 1995 that confirmed its initial findings (Ref. 2).

FDA also examined the information reviewed by its expert Panel in 1994, and the Panel's recommendation. In making its recommendation, the Panel reviewed the 1993 PHS report, testimony from several professional and health organizations, and additional scientific literature as described in section V.D of this document.

FDA also carefully examined numerous studies, as described in section IV.B of this document, submitted by petitioners as evidence that amalgam fillings cause detrimental physiological and psychological effects.

Lastly, FDA reviewed the comprehensive reports of several international health organizations and foreign countries on the risks associated with these products, described in section IV.D of this document. In preparing these reports, these countries and organizations conducted extensive reviews and assessments of existing literature and scientific information.

B. Weighing Benefits and Risks

For purposes of classification, FDA is to determine the safety and effectiveness of a device, in part, by weighing the probable benefits to health from use of the device against any probable risks of injury or illness from such use (section 513(a)(2) of the act).

1. Benefits

Over the past 100 years, amalgam fillings have provided great benefit by restoring the structure of teeth of millions of individuals. Products used to make amalgam fillings are used today in the following situations (Ref. 1):

- Individuals of all ages;
- Stress-bearing areas and in small to moderate sized cavities in the posterior teeth;
- Teeth with severe destruction of structure;
- For cast-metal, metal-ceramic, and ceramic restorations as a foundation;
- When a patient's commitment to oral hygiene is poor; and
- When moisture control is problematic with patients.

These products provide substantial benefits over other dental restorative materials because amalgam fillings offer a broad range of applicability in clinical situations, durability, ease of use and relative insensitivity to variations in handling technique and oral conditions (Ref. 1).

2. Risks

Dental amalgam can release minute amounts of elemental mercury, a metal whose toxicity at high exposure levels is well established. Estimates of human uptake of mercury from amalgam fillings have ranged between 1.24 and 27 micrograms (μg) per day, a factor of more than twentyfold. However, the widely varying experimental conditions and assumptions in calculations undoubtedly contribute to the wide range of results. Non-physiologic-based models resulted in estimates likely being several times too high. Recalculations correcting for these factors produced estimates of less than 5 μg per day. Studies have demonstrated higher blood and urine levels of mercury in individuals with amalgam fillings. However, estimates of mean daily mercury exposure from all sources vary (Ref. 1).

There is also evidence that mercury levels in body fluids spike during placement and removal of amalgam fillings and then decline over time, but no controlled clinical studies of health consequences of this phenomenon have been conducted. Occupational studies indicate that subclinical effects may occur at exposure levels tenfold higher than those typically experienced by the general population. Severity of response generally follows a dose-response pattern. There is no valid scientific evidence demonstrating specific adverse responses or a dose effect in humans at levels of mercury exposure associated with dental amalgam (Ref. 1).

Mercury is absorbed from many sources, including food and air. Because of the variability of exposures to mercury from all sources in the population, the margin of safety for some persons may be lowered when mercury from amalgam fillings is added. There is no valid scientific evidence that the general population treated with dental amalgam experiences any adverse clinical effects from this additional body burden of mercury arising from amalgam use (Ref. 1).

As stated previously, public concern has been expressed over the toxic effects of mercury from amalgam fillings and certain persons have attributed a variety of detrimental physiological and psychological effects to mercury toxicity from amalgam fillings. In response to these concerns, numerous national and international reviews have examined reports of adverse effects from amalgam fillings, and FDA has reviewed substantial information about amalgam risks, as described in sections IV and V of this document.

After review of the scientific evidence and review of numerous studies submitted in support of banning or upclassifying dental restorative products containing mercury, FDA does not find any persuasive evidence that the physiological and psychological symptoms attributed to amalgam fillings are caused by amalgam fillings. Furthermore, FDA does not find any persuasive evidence that there is any improvement of these symptoms after removal of amalgam fillings. Although there are studies purporting to support the view that amalgam products pose risks to persons beyond the small subpopulation of hypersensitive individuals, conclusions cannot be drawn from these studies because they are methodologically flawed.

This position concerning the evidence of risks posed by amalgam fillings is supported by the findings of the PHS reports (Ref. l), international health organizations, foreign governments, and the recommendations of FDA's expert advisory Panel as described in sections IV and V of this document. FDA does believe that there are some risks associated with dental products used in amalgam fillings from mercury toxicity that are associated with improper storage, trituration, and handling of the product. However, FDA does not believe that there are any major risks associated with toxicity of mercury when these products are used as directed. FDA believes there are also risks of allergic reaction to these products in a small subpopulation of individuals.

3. Benefits Versus Risks

FDA believes that valid scientific evidence, as defined in § 860.7(c)(2), exists to determine the safety and effectiveness of dental amalgam: Namely, certain studies described in the PHS report; the studies and reports upon which the Panel based its recommendation; studies and reports reviewed by international health organizations and foreign governments; and most notably the significant human

experience with amalgam for over 100 years.

Although the degree of risk is not known to a certainty, FDA must make an assessment to weigh the probable benefits with the probable risks associated with the use of the device, in accordance with the criteria for a reasonable assurance of safety under § 860.7(d)(1). The statute states that FDA's classification decisions are to be predicated on a ''reasonable assurance of safety and effectiveness,'' not an absolute assurance of safety and effectiveness (section 513(a)(1) of the act). Moreover, the statute directs FDA, in determining what is a ''reasonable assurance'' of safety and effectiveness, to assess ''probable risk,'' not absolute risk (section 513(a)(2) of the act). FDA believes that the benefits and risks of encapsulated alloy/mercury and amalgam alloy are sufficiently characterized to make a determination that these products should be classified into class II with special controls. FDA notes that there is more significant human experience with dental amalgam than any other restorative material, and that, accordingly, more is known about the risks of dental amalgam than any other restorative material (Ref. 1).

Given the known risks of untreated caries, the longstanding history of successful use of dental amalgam restorations, the benefits of products used in amalgam fillings over other alternative materials, and the overall lack of valid scientific evidence that persons whose carious teeth are treated with dental amalgam experience any adverse health effects, other than a very small number of people who are hypersensitive to mercury, FDA believes that the probable benefits of restorative dental products containing mercury outweigh the probable risks of using these products.

The agency acknowledges that a small subpopulation of persons that already have high body burdens of mercury or suffer from allergies may respond adversely to the additional mercury exposure from amalgam fillings. For these subpopulations, the agency believes the risks can be addressed by labeling and by using alternative filling materials.

FDA believes that special controls, such as those described below by the Panel, will address those risks presented by dental amalgam products, both to hypersensitive individuals and health care workers, and that class II with special controls will provide a reasonable assurance of the safety and effectiveness of dental amalgam products.

4. Proposed Special Controls to Address Risks Associated With the Use of Dental Restorative Materials Containing Mercury

FDA is proposing a labeling guidance and relevant recognized voluntary consensus standards as special controls for dental mercury and dental amalgam products. These special controls are consistent with the Panel's recommendations for special controls for encapsulated amalgam alloy and dental mercury, and FDA believes they address the risks related to toxicity associated with improper handling of dental mercury and dental amalgam products, and the risks for the small subpopulation of individuals who are allergic to ingredients in these products.

FDA's proposed guidance recommends that dental amalgam and dental mercury labeling lists all ingredients. By doing so, the clinician would be made aware of all materials he/she is placing in a patient's mouth, and would be able to avoid use of the product if the patient had known hypersensitivities to ingredients in amalgam products. This guidance also addresses risks to hypersensitive patients by recommending labeling instructing the practitioner not to use these products in hypersensitive persons, and of steps to take if allergic reactions do occur. FDA believes the guidance also controls the risks related to toxicity from improper storage, trituration, and handling by recommending instructions for storage, handling, and use. Finally, the guidance describes the prescription labeling requirements. FDA is including labeling aspects of the current edition of ''ISO 1559:1995'' and ANSI/ADA's ''Specification No. 6–1987,'' described below, into its labeling guidance.

The agency has adopted good guidance practices (GGPs) regulation, which set forth the agency's policies and procedures for the development, issuance, and use of guidance documents (21 CFR 10.115). Elsewhere in this issue of the **Federal Register**, FDA is announcing the availability of this draft guidance document for comment in accordance with GGPs.

FDA is also proposing ''ISO 1559:1995 Dental Materials—Alloys for Dental Amalgam'' as a special control for both encapsulated alloy/mercury and amalgam alloy. This standard was developed by international governmental and nongovernmental committees in liaison with ISO, a worldwide federation of national standards bodies. The standard describes appropriate specifications and test methods for alloys composed mainly of silver, tin, and copper used in amalgam. The alloy may be in either powder or tablet form, or in capsules with portions of alloy and mercury. It describes the minimum silver content and the maximum content of tin, copper, indium, palladium, platinum, zinc, and mercury. It also describes the recommended physical properties of the alloy, specifically, maximum percent creep, percent dimensional change, and compressive strength after 1 hour and after 24 hours. This standard also describes the test methods for determining physical properties. This standard addresses consistency of chemical composition and the important physical properties of the restorative material. This aspect of the special control allows the practitioner to know what substances are contained in the product, which will allow the practitioner to provide better counsel to patients who are allergic.

The standard also addresses the risks identified by the panel related to improper storage, trituration, and handling by providing recommendations, specifications, and instructions for proper handling, storage, and trituration.

This standard also has packaging and labeling instructions including a recommendation to list elements present in the alloy that are in concentrations greater than 0.1 percent, (see ISO 1559: 1995 section 7.2.1(f)). These packaging and labeling recommendations are consistent with the FDA labeling guidance discussed previously in all respects except one: The recommendation concerning the listing of ingredients. The specification in ISO 1559:1995 section 7.2.1(f) suggests listing only those elements present in the alloy in concentrations greater than 0.1 percent mass/mass (m/m), whereas the FDA labeling guidance recommends listing all ingredients in the product labeling. FDA is not incorporating this aspect of section 7.2.1 of ISO 1559:1995 as a special control because it believes all ingredients, even in concentrations smaller than 0.1 percent(m/m) could cause allergic reactions in some subset of persons. Therefore, FDA believes that practitioners should be informed of all ingredients. If practitioners are informed of the ingredients they will be able to counsel patients on appropriate treatment options.

This standard may be obtained from the International Organization for Standardization, Case Postale, Geneva, Switzerland, CH-1121. ISO also maintains a site on the Internet at http://www.iso.org.

FDA is also proposing to adopt ANSI/ADA's ''Specification No. 6–1987 for Dental Mercury'' as a special control for dental mercury (§ 872.3700) and encapsulated alloy/mercury (§ 872.3070). This standard specifies the specifications and test methods for mercury suitable for the preparation of dental amalgam and provides recommendations for packaging and marketing. It recommends packaging in air tight containers, and providing hazard warnings regarding mercury hygiene. This standard will allow the dentist to be aware of the physical properties of the mercury that will be used for restorations that will enable the dentist to better counsel allergic patients and will alert the dentist to mercury hygiene procedures. The risks identified by the Panel, including toxicity resulting from improper handling and storage that may result in systemic absorption of liquid mercury through the skin, local chemical sensitivity reaction, and inhalation of minute amounts of mercury vapor, are addressed in the standard by detailed recommendations for mercury manipulation and its packaging information, transport and handling procedures. This standard may be obtained from ANSI/AAMI, 11 West 42d St., New York, NY 10036. ANSI also maintains a site on the Internet at http://www.ansi.org.

VII. Environmental Impact

The agency has determined under 21 CFR 25.34(b) that this action is of a type that does not individually or cumulatively have a significant effect on the human environment. Therefore, neither an environmental assessment nor an environmental impact statement is required.

VIII. Paperwork Reduction Act of 1995

FDA has tentatively determined that this proposed rule does not contain any new information collection requirements and, therefore, clearance by the Office of Management and Budget under the Paperwork Reduction Act of 1995 is not necessary.

IX. Analysis of Impacts

FDA has examined the impacts of the proposed rule under Executive Order 12866 and the Regulatory Flexibility Act (5 U.S.C. 601–612) (as amended by subtitle D of the Small Business Regulatory Fairness Act of 1996 (Public Law 104–121)), and the Unfunded Mandates Reform Act of 1995 (Public Law 104–4). Executive Order 12366 directs agencies to assess all costs and benefits of available regulatory alternatives and, when regulation is necessary, to select regulatory approaches that maximize net benefits (including potential economic, environmental, public health and safety, and other advantages; distributive impacts; and equity). The agency believes that this proposed rule is consistent with the regulatory philosophy and principles identified in the Executive order. In addition, the classification actions are not significant regulatory actions as defined by the Executive order. If a rule has a significant economic impact on a substantial number of small entities, the Regulatory Flexibility Act requires agencies to analyze regulatory options that would minimize any significant impact of a rule on small entities.

The agency certifies that these proposed classification actions, if finalized, will not have a significant economic impact on a substantial number of small entities. In addition, this proposed rule will not impose costs of $100 million or more on either the private sector or State, local, and tribal governments in the aggregate, and therefore a summary statement of analysis under section 202(a) of the Unfunded Mandates Reform Act of 1995 is not required.

The proposed classification actions will affect the three separate devices: Dental mercury, amalgam alloy, and encapsulated dental amalgam. Professional dental groups have recommended the use of encapsulated dental amalgam over the other separate products. According to FDA data, encapsulated amalgam now accounts for over 99 percent of the amalgam market. Encapsulated dental amalgam is typically purchased and stored in packages of 80 capsules. These packages are kept at hand in dental clinics until needed. A typical restoration is expected to require two capsules of amalgam.

According to FDA records, there are 35 manufacturers of dental mercury, amalgam alloy, and encapsulated dental amalgam. In total, FDA expects that 40 distinct products will be affected by the proposed classification actions. Over 200 million dental restorations were performed during the last year for which FDA has data (1999), of which 64 million utilized dental amalgam (ADA, 1999). There are currently approximately 155,000 active dentists operating in 145,000 separate clinics (Bureau of Labor Statistics, 1998).

FDA is proposing to: (1) Issue a separate classification regulation for encapsulated amalgam alloy and dental mercury; (2) amend the classification for amalgam alloy by adding special controls; and (3) reclassify dental mercury from class I (general controls) to class II. FDA is proposing that all three products would have the same labeling guidance as a special control. In addition, FDA is proposing that dental mercury would have a voluntary ANSI standard as a special control, encapsulated alloy and dental mercury would have voluntary ANSI and ISO standards as special controls, and the amalgam alloy products would have a voluntary ISO standard as a special control.

FDA does not expect any change in costs related to the voluntary standard special controls. Manufacturers that export encapsulated amalgam are already responsible for meeting these voluntary standards, and other manufacturers currently follow equivalent standardized methods. Any change in performance test procedures is likely to result in little, if any, incremental change in production costs.

The special control labeling guidance, however, would entail some minimal costs to manufacturers. While some manufacturer's products currently include ingredient labeling, there is no consistent industry format. FDA is recommending a consistent label that will allow interested consumers of dental amalgam to easily obtain necessary information that may result in mercury exposure avoidance. Thus, FDA believes that manufacturers of these products will redesign their labeling or develop for the first time ingredient labeling as a result of these proposed classification actions.

FDA has developed estimates of the costs of enhanced labeling for dental amalgam. This estimate is based on costs developed by a consultant firm (Eastern Research Group (ERG)) for developing labeling for similar medical devices, specifically medical gloves (Ref. 21). These estimates include the costs of artwork, design, regulatory review, production, and application. Overall, the cost of developing a new label under these guidelines is estimated to be $1,444 (or approximately $1,500). FDA expects that 40 labels will be developed, 1 label for each product produced by the 35 manufacturers of the three devices. Thus, the total cost of designing and applying enhanced labels is expected to equal $60,000 for 40 products. Over an estimated 5-year useful life (based on estimated cycle of labeling in the device industry), the average annualized cost to industry of this requirement (at 7 percent discount rate) is approximately $15,000.

FDA does not expect the proposed classification actions to affect dental clinics.

FDA believes the costs of developing new labeling (approximately $1,500) per product are not significant for a substantial number of small entities. The dental instrument and supplies industry, standard industrial code (SIC 3843) is typified by small establishments. Only about 35 of the approximately 650 establishments in the industry have more than 100 employees. (According to the Small Business Administration, any entity with fewer than 500 employees is considered small for this industry). These establishments are highly specialized (93 percent of their shipments are in this industry group) and concentrated (97 percent of dental sales were from these establishments). Total value of shipments was estimated at $2.0 billion, or about $125,000 per employee.

The Bureau of Census (Census) has estimated that 12 percent of all industry shipments come from dental establishments with fewer than five employees. Using the Census figures for dental manufacturers that have fewer than five employees, the average value of their shipments would equal $1.25 million per year. The proposed classification actions would result in the design and application of enhanced labeling, at a cost of $1,500 per product. There are 35 manufacturers producing 40 products. Assuming one manufacturer produces six products, the costs for the manufacturer producing six products would be $9,000 and the cost for manufacturers producing one product would be $1,500. The costs would only be approximately 0.1 percent to 0.7 percent (less than 1.0 percent) of the expected revenues for an extremely small entity. Thus, under to the Regulatory Flexibility Act (5 U.S.C. 605(b)), FDA certifies that the proposed regulations will not have a significant economic impact on a substantial number of small entities.

X. Request for Comments

Interested persons may submit to the Dockets Management Branch (address above) written or electronic comments regarding this proposal by May 21, 2002. Two copies of any comments are to be submitted, except that individuals may submit one copy. Comments are to be identified with the docket number found in brackets in the heading of this document. Received comments may be seen in the office above between 9 a.m. and 4 p.m. Monday through Friday.

XI. Effective Dates

FDA proposes that any final rule that may issue based on this proposal become effective 30 days after its date of publication in the **Federal Register**.

XII. References

The following references have been placed on display in the Dockets Management Branch (address above) and may be seen by interested persons between 9 a.m. and 4 p.m., Monday through Friday.

1. Dental Amalgam: A Scientific Review and Recommended Public Health Service Strategy for Research, Education and Regulation; Public Health Service, U.S. Department of Health and Human Services, January 1993.
2. Update Statement by the U.S. Public Health Service on the Safety of Dental Amalgam, September 1, 1995.
3. Citizen petition Docket No. 93P–0424, citizen petition Docket No. 94P-0354/CP1, and citizen petition from Dr. Baylin et al.
4. Summary of the documented review of scientific studies referenced in the dental amalgam petitions, May 28, 1997.
5. Response to citizen petition Docket No. 93P-0424/CP1, letter to Robert E. Reeves, Esq., dated October 31, 1997; response to citizen petition Docket No. 94P–0354, letter to Robert E. Reeves, Esq., dated November 10, 1997; and response to citizen petition submitted to the National Institute for Environmental Health Sciences referred to FDA for reply, letter to Michael A. Baylin, D.D.S. dated October 31, 1997.
6. Swedish National Board of Health and Welfare, Possible Health Effects and Dental Amalgam, 1994.
7. Dental Amalgam—A Report with Reference to the Medical Devices Directive 93/42/EEC from an Ad Hoc Working Group Mandated by the European Commission, June 1998.
8. The Safety of Dental Amalgam, Health Canada, 1995.
9. Dental Amalgam and Human Health (A Current Consensus); WHO Collaborating Centre in Oral Health, Wellington School of Medicine, University of Otego, Wellington, New Zealand, June 1996.
10. The Safety of Dental Amalgam: A State of the Art Review, Conseil d'Evaluation des Technologies de la Sante' de Quebec, April 1997.
11. Consensus Statement on Dental Amalgam, World Health Organization Consultation on Assessing the Risks and Benefit to Oral Health, Oral Care and Environment Using Dental Amalgam and its Replacement, March 7, 1997, draft.
12. Transcript from 1993 meeting of the Food and Drug Administration Dental Products (Advisory) Panel, December 1 to 3, 1993, and transcript from 1994 meeting of the Food and Drug Administration's Dental Products (Advisory) Panel, June 29, 1994.
13. Enwonwu, C. O., ''Potential Health Hazard of Use of Mercury in Dentistry: Critical Review of the Literature'' *Environmental Research* 42:257–274, 1987.
14. Haikel, Y. et al. ''Exposure to mercury vapor during setting, removing, and polishing amalgam restorations'' *Journal of Biomedical Materials Research* 24:1551–1558, 1990.
15. Mandel, Irwin D, ''Amalgam Hazards; An Assessment of Research'' *Journal of the American Dental Association*, 122:62–65 August 1991.
16. Corbin, Stephen B, ''The Benefits and Risks of Dental Amalgam: Current Findings Reviewed'' *Journal of the American Dental Association*, 125:381–387, April 1994.
17. Mackert, J. R., ''Factors Affecting Estimation of Dental Amalgam Mercury Exposure from Measurements of Mercury Vapor Levels in Intra-oral Expired Air'' *Journal of Dental Research*, 66 No. l2:1775–1780, December 1987.
18. Mackert J. Rodway, ''Dental Amalgam and Mercury'' *Journal of the American Dental Association*, 122:61, August 1991.
19. Reinhardt, John W., ''Risk Assessment of Mercury Exposure from Dental Amalgams'' *Journal of Public Health*, 48 No. 3, Summer 1988.
20. Jacobson, Elizabeth D., ''Regulatory Issues in Dentistry: How Dentists Can Participate'' *Journal of American Dental Associates*, 4:444–50, April 12, 1994.
21. Eastern Research Group; ''Preliminary Estimates: Labeling and Related Testing Costs for Medical Glove Manufacturers,'' memorandum, January 18, 1999.

List of Subjects in 21 CFR Part 872

Medical devices.

Therefore, under the Federal Food, Drug, and Cosmetic Act and under authority delegated to the Commissioner of Food and Drugs, it is proposed that 21 CFR part 872 be amended as follows:

PART 872—DENTAL DEVICES

1. The authority citation for 21 CFR part 872 continues to read as follows:

Authority: 21 U.S.C. 351, 360, 360c, 360e, 360j, 371.

2. Section 872.3050 is amended by revising paragraph (b) to read as follows:

§ 872.3050 Amalgam alloy.

* * * * *

(b) *Classification*. Class II (special controls). The special controls for this device are:

(1) International Standard ''ISO 1559:1995 Dental Materials—Alloys for Dental Amalgam,'' and

(2) FDA's ''Special Control Guidance for Industry on Encapsulated Amalgam, Amalgam Alloy, and Dental Mercury Labeling.''

3. Section 872.3070 is added to read as follows:

§ 872.3070 Encapsulated amalgam alloy and mercury.

(a) *Identification*. Encapsulated amalgam alloy and mercury is a device composed of elemental mercury and amalgam alloy, separated by a septum, which, when placed in a dental amalgamator, produces dental amalgam which is intended for the restoration of teeth.

(b) *Classification*. Class II (special controls). The special controls for this device are:

(1) ''ISO 1559:1995 Dental Materials—Alloys for Dental Amalgam,''

(2) ANSI/ADA's ''Specification No. 6–1987 for Dental Mercury,'' and

(3) FDA's ''Special Control Guidance for Industry on Encapsulated Amalgam, Amalgam Alloy, and Dental Mercury Labeling.''

4. Section 872.3700 is amended by revising paragraph (b) to read as follows:

§ 872.3700 Dental mercury.

* * * * *

(b) *Classification*. Class II (Special Controls). The special controls for this device are:

(1) ANSI/ADA ''Specification No. 6–1987 for Dental Mercury,'' and

(2) FDA's ''Special Control Guidance Document on Encapsulated Amalgam, Amalgam Alloy, and Dental Mercury Labeling.''

Dated: February 7, 2002.

Margaret M. Dotzel,

Associate Commissioner for Policy.

[FR Doc. 02–4028 Filed 2–19–02; 8:45 am]

BILLING CODE 4160–01–S

DEPARTMENT OF THE TREASURY

Internal Revenue Service

26 CFR Part 1

[REG–209114–90]

RIN 1545–AH49

Golden Parachute Payments

AGENCY: Internal Revenue Service (IRS), Treasury.

ACTION: Notice of proposed rulemaking and notice of public hearing.

SUMMARY: This document contains proposed regulations relating to golden parachute payments to provide guidance to taxpayers who must comply with section 280G. Proposed regulations under section 280G were previously published in the **Federal Register** on May 5, 1989 (the 1989 proposed regulations). These proposed regulations are proposed to apply to any payments that are contingent on a change in ownership or control occurring on or after January 1, 2004. Taxpayers may rely on these proposed regulations until the effective date of the final regulations. Alternatively, taxpayers may rely on the 1989 regulations for any payment contingent on a change in ownership or control that occurs prior to January 1, 2004.

DATES: Written or electronic comments must be received by June 5, 2002. Requests to speak and outlines of topics to be discussed at the public hearing scheduled for June 26, 2002, must be received by June 5, 2002.

ADDRESSES: Send submissions to CC:ITA:RU (REG–209114–90), room 5226, Internal Revenue Service, POB 7604, Ben Franklin Station, Washington, DC 20044. Submissions may be hand delivered Monday through Friday between the hours of 8 a.m. and 5 p.m. to: CC:ITA:RU (REG–209114–90), Courier's Desk, Internal Revenue Service, 1111 Constitution Avenue, NW, Washington, DC or sent electronically, via the IRS Internet site *www.irs.gov/regs.* The public hearing will be held in the IRS Auditorium, Internal Revenue Building, 1111 Constitution Avenue, NW, Washington, DC.

FOR FURTHER INFORMATION CONTACT: Concerning the regulations, Erinn Madden at (202) 622–6030 (not a toll-free number). To be placed on the attendance list for the hearing, please contact LaNita M. Vandyke at (202) 622–7180.

SUPPLEMENTARY INFORMATION:

Background

This document contains proposed amendments to 26 CFR part 1 under section 280G of the Internal Revenue Code (Code). Sections 280G and 4999 of the Code were added to the Code by sec. 67 of the Deficit Reduction Act, Public Law 98–369 (98 Stat. 585). Section 280G was amended by sec. 1804(j) of the Tax Reform Act of 1986, Public Law 99–514 (100 Stat. 2807), sec. 1018(d) of the Technical and Miscellaneous Revenue Act of 1988, Public Law 100–647 (102 Stat. 3581) and sec. 1421 of the Small Business Job Protection Act of 1996, Public Law 104–188 (110 Stat. 1755).

Section 280G denies a deduction to a corporation for any excess parachute payment. Section 4999 imposes a 20-percent excise tax on the recipient of any excess parachute payment. Related provisions include section 275(a)(6), which denies the recipient a deduction for the section 4999 excise tax, and section 3121(v)(2)(A), which relates to Federal Insurance Contributions Act. Proposed regulations (PS–217–84) under section 280G were previously published in the **Federal Register** at 54 FR 19390 on May 5, 1989 (the 1989 proposed regulations).

Explanation of Provisions

Overview

Section 280G denies a deduction to a corporation for any excess parachute payment. Section 4999 imposes a 20-percent excise tax on the recipient of any excess parachute payment. The disallowance of the deduction under section 280G is not contingent on the imposition of the excise tax under section 4999, and the imposition of the excise tax under section 4999 is not contingent on the disallowance of the deduction under section 280G. For example, an individual may be subject to the 20-percent excise tax under section 4999 even though the payor is a foreign corporation not subject to United States income tax.

Section 280G(b)(2)(A) defines a *parachute payment* as any payment that meets all of the following four conditions: (a) The payment is in the nature of compensation; (b) the payment is to, or for the benefit of, a disqualified individual; (c) the payment is contingent on a change in the ownership of a corporation, the effective control of a corporation, or the ownership of a substantial portion of the assets of a corporation (a change in ownership or control); and (d) the payment has (together with other payments described in (a), (b), and (c) of this paragraph with respect to the same individual) an aggregate present value of at least 3 times the individual's base amount. Section 280G(b)(2)(B) provides that the term parachute payment also includes any payment in the nature of compensation to, or for the benefit of, a disqualified individual if the payment is pursuant to an agreement that violates any generally enforced securities laws or regulations (securities violation parachute payment).

Section 280G(b)(1) defines the term excess parachute payment as an amount equal to the excess of any parachute payment over the portion of the disqualified individual's base amount that is allocated to such payment. For this purpose, the portion of the base amount allocated to a parachute payment is the amount that bears the same ratio to the base amount as the present value of the parachute payment bears to the aggregate present value of all such payments to the same disqualified individual.

Generally, excess parachute payments may be reduced by certain amounts of reasonable compensation. Section 280G(b)(4)(B) provides that, except in the case of securities violation parachute payments, the amount of an excess parachute payment is reduced by any portion of the payment that the taxpayer establishes by clear and convincing evidence is reasonable compensation for personal services actually rendered by the disqualified individual before the date of change in ownership or control. Such reasonable compensation is first offset against the portion of the base amount allocated to the payment.

The 1989 proposed regulations provided guidance regarding the application of section 280G to corporations and individuals. Although many aspects of the 1989 proposed regulations were well-received, the IRS has received numerous comments requesting modification and clarification of the 1989 proposed regulations. In response, these proposed regulations clarify and revise, as described below, the 1989 proposed regulations. Many aspects of the 1989 proposed regulations are preserved, and these proposed regulations retain the same organizational structure as the 1989 proposed regulations. Major modifications to the 1989 proposed regulations are described below.

Disqualified Individuals

A payment constitutes a parachute payment only if the payment is made to (or for the benefit of) a disqualified individual. Section 280G(c) defines the term *disqualified individual* to include any individual who (a) is an employee or independent contractor who performs personal services for a corporation, and (b) is an officer, shareholder, or highly-compensated individual.

The determination of whether an individual is a disqualified individual under these proposed regulations is substantially the same as under the 1989 proposed regulations, with three significant changes. First, Q/A–17 of the 1989 regulations provides a *de minimis* rule for purposes of identifying which shareholders of a corporation are disqualified individuals. Under the 1989 proposed regulations, an individual is a shareholder for purposes of section 280G if the individual, at any time during the disqualified individual determination period, owns stock of a corporation with a fair market value exceeding the lesser of $1 million or 1 percent of the total fair market value of the outstanding shares of all classes of the corporation's stock. Since the issuance of the 1989 proposed regulations, it has become apparent that this rule may include individuals who do not possess significant influence over the corporation. Therefore, under Q/A–17 of these proposed regulations, the $1 million test is eliminated. Under these proposed regulations, an individual is a shareholder only if, during the disqualified individual determination period, the individual owns stock of a corporation with a fair market value that exceeds 1 percent of the total fair market value of the outstanding shares of all classes of the corporation's stock. The constructive ownership rules of section 318(a) continue to apply for purposes of determining the amount of stock owned by the individual. Under these rules, for example, to determine the amount of stock owned by an individual, the stock underlying vested stock options is considered constructively owned by that individual.

Second, these proposed regulations modify the annualized compensation method for determining who is a highly-compensated individual under Q/A–19. Under the 1989 proposed regulations, no individual whose annualized compensation during the disqualified individual determination period is less than $75,000 is treated as a highly-compensated individual, even if the individual otherwise satisfies the definition of a highly-compensated individual. Q/A–19 is modified to provide that an individual must have annualized compensation equal to at least the amount described in section 414(q)(1)(B)(i). This amount for 2002 is $90,000 and is adjusted periodically for cost-of-living increases. This modification both updates the amount provided in the 1989 proposed regulations and provides a mechanism to update this amount periodically without further amendment of these regulations.

Finally, these proposed regulations change the disqualified individual determination period under Q/A–20. Under the 1989 proposed regulations, the disqualified individual determination period is the portion of the year of the corporation ending on the date of the change in ownership or control and the immediately preceding twelve months (with an option to use the calendar year or the corporation's fiscal year). Q/A–20 of these proposed regulations is modified to change this period to the twelve months prior to and ending on the date of the change in ownership or control of the corporation. Under this rule, the disqualified individual determination period is the same length for any change in ownership or control and is not affected by the date of the change in ownership or control.

Payment in the Nature of Compensation

A payment may be a parachute payment only if it is a payment in the nature of compensation. All payments, in whatever form, are payments in the nature of compensation if the payments arise out of the employment relationship or are associated with the performance of services. In Q/A–11, these proposed regulations clarify that payments in the nature of compensation include cash, the right to receive cash, or a transfer of property.

Q/A–13 of the 1989 proposed regulations provides that the transfer of a nonstatutory option is treated as a payment in the nature of compensation (even if the option does not have a readily ascertainable fair market value within the meaning of § 1.83–7(b)). The 1989 proposed regulations reserve the issue of the treatment of statutory options (i.e., options to which section 421 applies). These proposed regulations revise Q/A–13 to address the treatment of statutory stock options to provide that nonstatutory stock options and statutory stock options are treated the same. Because both the transfer of a statutory option and the transfer of a nonstatutory stock option are payments in the nature of compensation, there is no basis for distinguishing between these two types of options for purposes of section 280G.

In addition, these proposed regulations revise Q/A–13 with respect to the valuation of both statutory and nonstatutory stock options. Under the 1989 proposed regulations, the value of an option with an ascertainable fair market value is determined under all the facts and circumstances, including the difference between the option's exercise price and the value of the property at the time of vesting, the probability of an increase or decrease in the value of such property, and the length of the option exercise period.

Since the issuance of the 1989 proposed regulations, commentators have indicated that Q/A–13 does not provide sufficient guidance about the determination of the value of a stock option. In particular, commentators question whether the intrinsic value of the option (the difference between the exercise price and the value of the property, or spread) determined at the time of the change in ownership or control, or a value determined under a valuation model such as Black-Scholes, should be used for purposes of section 280G. Using the factors listed in the 1989 proposed regulations results in a value different from the value obtained from using only the difference between the exercise price and the value of the property. Commentators have also noted that valuation methods other than spread are often complicated and difficult to apply in some circumstances, particularly when the stock underlying the option is not publicly traded.

These proposed regulations continue to provide for the use of the factors described in the 1989 proposed regulations. To provide further guidance on acceptable and administrable methods for valuing stock options, these proposed regulations delegate authority to the Commissioner to provide methods for valuation of stock options

through published guidance. Rev. Proc. 2002–13, 2002–8 I.R.B. (February 25, 2002) published in conjunction with these proposed regulations, provides several valuation methods. One of the methods permitted under this revenue procedure is a simplified safe harbor approach modeled after the Black-Scholes valuation method. The safe harbor allows a corporation to establish a value for stock options based on spread at the time of the change in ownership or control, the remaining term of the option, and a basic assumption regarding the volatility of the underlying stock. Other factors relevant to the Black-Scholes valuation model, including a risk-free rate of return and dividend yield, are addressed in the table contained in the revenue procedure. The safe harbor valuation method provided in the revenue procedure may be used without regard to whether the underlying stock is publicly traded.

Contingent on Change

To be a parachute payment, a payment in the nature of compensation to a disqualified individual must be contingent on a change in ownership or control. Q/A–22 of the 1989 proposed regulations provides guidance on when a payment is contingent on a change in ownership or control. Generally, a payment is treated as contingent on a change in ownership or control if the payment would not in fact have been made had no change in ownership or control occurred. A payment generally is treated as one which would not in fact have been made in the absence of a change in ownership or control unless it is substantially certain, at the time of the change, that the payment would have been made whether or not the change in ownership or control occurred.

These proposed regulations clarify in Q/A–22 that a payment is contingent on a change in ownership or control if the payment would not have been made absent the change in ownership or control, even if the payment is also contingent on a second event, such as termination of employment within a period following the change in ownership or control. In addition, as under the 1989 proposed regulations, a payment generally is treated as contingent on a change in ownership or control if (a) the payment is contingent on an event that is closely associated with such a change, (b) a change in ownership or control actually occurs, and (c) the event is materially related to the change in ownership or control. The fact that a payment that is contingent on an event closely associated with a change in ownership or control is also conditioned on the occurrence of a second event does not affect the determination that the payment is contingent on a change in ownership or control as the result of the occurrence of the first event.

Under Q/A–24 of the 1989 proposed regulations, the entire amount of a payment is generally treated as contingent on a change in ownership or control. These proposed regulations clarify that the general rule of Q/A–24(a) (and not the special rules in either Q/A–24(b) or (c), discussed below) applies to the payment of amounts due under an employment agreement on a termination of employment or change in ownership or control that, without regard to the change, would have been paid for the performance of services after the termination of employment or change in ownership or control, as applicable. Also, the general rules of Q/A–24(a) apply to the accelerated payment of an amount that is otherwise payable only on the attainment of a performance goal or contingent on an event or condition other than the continued performance of services for a specified period of time. In situations governed by Q/A–24(a), the determination of whether a portion of the payment is reasonable compensation for services rendered before, on, or after the change in ownership or control is determined under Q/As–38 through 44. With respect to amounts due under an employment agreement, however, in most situations, a reduction for reasonable compensation for services rendered before the change in ownership or control is inappropriate, given the general expectation that an individual is not under-compensated for services rendered before a change in ownership or control. See Conf. Rep. No. 98–861, at 852 (1984).

Q/A–24(b) and (c) provide an objective method for determining the portion of a payment that is treated as contingent on a change in ownership or control for certain types of payments. These rules are not appropriate in situations such as the acceleration of salary payments under an employment agreement, when the periodic nature of the payments for services means that there is no issue in determining the amount of the payment that is accelerated, or in situations where a payment is conditioned on achievement of a performance goal or other event.

As under the 1989 proposed regulations, these proposed regulations provide that a payment is treated as contingent on a change in ownership or control if the change accelerates the time at which the payment is made or accelerates the vesting of a payment. Q/A–24(b) and (c) provide rules for determining the portion of such payment that is treated as contingent on the change in ownership or control. These proposed regulations clarify when Q/A–24(b) and (c) apply to a contingent payment.

These proposed regulations clarify that Q/A–24(b) applies if a payment is vested, without regard to the change in ownership or control, and is treated as contingent on a change in ownership or control because the change accelerates the time the payment is made. For example, if an individual has a vested right to a payment at normal retirement age under a nonqualified deferred compensation plan, but instead that payment is made immediately following a change in ownership or control, Q/A–24(b) applies to determine the portion, if any, of the payment that is treated as contingent on the change in ownership or control.

These regulations clarify that Q/A–24(c) applies to a payment that becomes vested as a result of a change in ownership or control to the extent that (i) without regard to the change, the payment was contingent only on the performance of services for the corporation for a specified period of time and (ii) the payment is attributable, at least in part, to the performance of services before the date the payment is made or becomes certain to be made. For example, if an individual will receive a bonus if employed at the end of a 3-year period, but the bonus is paid immediately on the date of the change of control, Q/A–24(c) applies to determine the portion of the payment that is treated as contingent on the change in ownership or control.

Q/A–24(b) provides that, when a payment is accelerated, the portion of the payment that is contingent on the change is the amount by which the accelerated payment exceeds the present value of the payment absent acceleration. Q/A–24(b) further provides that if the amount of a payment without acceleration is not reasonably ascertainable, and the acceleration does not significantly increase the value of the payment, then the present value of the payment absent the acceleration is equal to the amount of the accelerated payment. As a result, the value of the accelerated payment is equal to the value of the payment absent acceleration and no portion of the payment is treated as contingent on a change in control. If the value of a payment absent acceleration is not reasonably ascertainable and the acceleration significantly increases the value of the payment, the future value of the payment is equal to the amount

of the accelerated payment. When the future value (as opposed to the present value) of the payment is deemed to be the amount of the accelerated payment, then there is an excess and, therefore, a portion of the payment is treated as contingent on the change.

Q/A–24(c) provides that the portion of the payment treated as contingent on the change when both vesting and payment are accelerated is the lesser of (1) the payment or (2) the amount determined under Q/A–24(b) plus an additional amount to reflect the lapse of the obligation to perform additional services. Q/A–24(c) provides that for purposes of determining the amount under paragraph (b), the acceleration of the vesting of a stock option or the lapse of a restriction on restricted stock is considered to increase significantly the value of the payment.

Because Q/A–24(b) and (c) operate to provide an objective basis for determining the portion of a payment that is earned as of the date of a change in ownership or control, and therefore, not contingent on a change in ownership or control, these proposed regulations clarify that the rules in Q/As–38 through 44 (which provide rules related to reasonable compensation for services rendered), are inapplicable if the special rules in Q/A–24(b) or (c) apply to a payment.

Change in Ownership or Control

These proposed regulations follow the same approach as the 1989 proposed regulations for determining when a change in ownership or control occurs. However, these proposed regulations clarify that, for purposes of determining whether two or more persons acting as a group are considered to own more than 50 percent of the total fair market value or total voting power of the stock of a corporation on the date of a merger, acquisition, or similar transaction involving that corporation, a person who owns stock in both corporations involved in the transaction is treated as acting as a group with respect to the other shareholders in a corporation only to the extent of such person's ownership of stock in that corporation prior to the transaction, and not with respect to his or her ownership in the other corporation. For example, assume individual A owns stock in both corporations X and Y when corporation X acquires stock in Y in exchange for X stock. In determining whether corporation Y has undergone a change in ownership or control, individual A is considered to be acting as a group with other shareholders in corporation Y only to the extent of A's holdings in corporation Y prior to the transaction, and not with respect to A's ownership in X. In determining whether Corporation X has undergone a change in ownership or control, individual A is considered to be acting as a group with other shareholders in Corporation X only to the extent of individual A's holdings in Corporation X prior to the transaction, and not with respect to individual A's ownership interest in Corporation Y. This rule applies without regard to the type of shareholder involved (i.e., whether the shareholder is an individual or an institutional shareholder, such as a corporation, mutual fund, or trust).

Comments are requested with respect to whether the change in ownership or control rules in these proposed regulations should be further revised. Comments are also requested with respect to whether additional guidance is necessary regarding the application of the change in ownership or control provisions, and these proposed regulations in general, in the context of specific business situations such as bankruptcy.

Shareholder Approval Requirements

Section 280G specifically exempts from the definition of the term *parachute payment* several types of payments that would otherwise constitute parachute payments. Deductions for payments exempt from the definition of *parachute payment* are not disallowed by section 280G, and such exempt payments are not subject to the 20-percent excise tax of section 4999. In addition, such exempt payments are not taken into account in applying the 3-times-base-amount test of section 280G(b)(2)(A)(ii).

The most significant revisions made by these proposed regulations with respect to exempt payments are clarifications to the shareholder approval requirements which must be met for payments with respect to a corporation in which no stock is readily tradeable on an established securities market or otherwise immediately before the change in ownership or control.

Section 280G(b)(5)(B) provides that the shareholder approval requirements are met if two conditions are satisfied. First, the payment is approved by a vote of the persons who owned, immediately before the change in ownership or control, more than 75% of the voting power of all outstanding stock of the corporation. Second, there is adequate disclosure to shareholders of all material facts concerning all payments which (but for this rule) would be parachute payments with respect to a disqualified individual. Since the issuance of the 1989 proposed regulations, commentators have indicated that the 1989 proposed regulations do not fully explain how the shareholder approval requirements operate or accurately reflect business practices connected with a change in ownership or control.

The proposed regulations clarify the process of obtaining shareholder approval within the structure provided by section 280G(b)(5)(B). Under this section, a shareholder approval vote is valid only if (1) it is a vote of more than 75% of the shareholders entitled to vote based on ownership in the corporation immediately before the change in ownership or control, and (2) disclosure is made with respect to all payments that would otherwise be parachute payments for an individual.

The first step in obtaining shareholder approval is to identify the shareholders entitled to vote. Q/A–7 is revised to clarify that stock held by a disqualified individual (or by certain entity shareholders) is not entitled to vote with respect to a payment to be made to any disqualified individual and that this stock is disregarded in determining whether the more than 75% approval requirement has been met. Once the stock entitled to vote is determined, more than 75% of the voting power of such stock must approve the payment. Q/A–7 also includes a rule of administrative convenience providing that a vote to approve the payment does not fail to be a vote of the shareholders who own stock immediately before the change in ownership or control if eligibility to vote is based on the shareholders of record at the time of any vote taken in connection with a transaction or event giving rise to the change in ownership or control within the three-month period ending on the date of the change in ownership or control. This rule only applies if the disclosure requirements are also met.

These proposed regulations further clarify that not all parachute payments must be subject to a shareholder vote to satisfy the shareholder approval requirements with respect to a payment. It is permissible for only a portion of the payments that would otherwise be made to a disqualified individual to be subject to vote. For example, assume that a disqualified individual with a base amount of $150,000 would receive payments that (but for the exemption for a corporation with no readily tradeable stock) would be parachute payments including (i) a bonus payment of $200,000, (ii) vesting in stock options with a fair market value of $500,000, $200,000 of which is contingent on the change in ownership or control, and (iii) severance payments of $100,000. In this

situation, assuming all of the payments are disclosed, the corporation may submit to the shareholders for approval (1) all of the payments, (2) any one of the three payments, or (3) $50,001 of any one of the payments (e.g., options with a value of $50,001). The issue submitted to a shareholder vote must be whether the payment will be made to the disqualified individual, not whether the corporation will be able to deduct the payment. In addition, the vote must be a separate vote of the shareholders. Therefore, the merger, acquisition, or other transaction cannot be conditioned on the shareholders' approval of the payment.

These proposed regulations also clarify that the shareholder approval requirements are met by a single vote on all payments submitted to the vote, including payments to more than one disqualified individual (assuming the disclosure requirements, described below, are also met).

The shareholder approval requirements also require adequate disclosure of all material facts concerning the amount of all parachute payments. For this purpose, the proposed regulations clarify that the amount of all parachute payments to be made to each disqualified individual, and not just the amount of the payments subject to vote, is a material fact. These proposed regulations also clarify that shareholders should be provided with basic information about the type of payments involved (e.g., vesting of stock options or severance payments). This disclosure of information must be made to all shareholders entitled to vote, not just to shareholders with 75% of the voting power entitled to vote.

Reasonable Compensation

The determination of whether amounts are reasonable compensation is relevant for two purposes. First, an excess parachute payment is reduced by any portion of the payment that constitutes reasonable compensation for services actually rendered before a change in ownership or control. Second, amounts that are reasonable compensation for services to be rendered after a change in ownership or control are exempt from the definition of parachute payment. In both situations, reasonable compensation for services must be demonstrated by clear and convincing evidence.

These proposed regulations clarify two issues with respect to reasonable compensation for services performed after a change in ownership or control. The proposed regulations clarify that clear and convincing evidence that a payment is reasonable compensation for services rendered after a change in ownership or control exists if the individual's annual compensation after the change in ownership or control (apart from normal increases) is not significantly greater then the individual's annual compensation before the change in ownership or control, provided that the individual's duties and responsibilities are substantially the same after the change in ownership or control as they were before the change in ownership or control. If the individual's duties and responsibilities have changed, then the clear and convincing evidence must demonstrate that the individual's annual compensation after the change in ownership or control is not significantly greater than the compensation customarily paid by the employer, or by comparable employers, to persons performing comparable services.

Payments to an individual under an agreement that requires the individual to refrain from providing services (such as under a covenant not to compete) may also constitute reasonable compensation for services to be rendered on or after the date of the change in ownership or control. Under Q/A–42 of these proposed regulations, an agreement is treated as an agreement to refrain from services (rather than an agreement for severance pay) if it is demonstrated with clear and convincing evidence that the agreement substantially constrains the individual's ability to perform services and there is a reasonable likelihood that the agreement will be enforced against the individual. If, under the facts and circumstances, the agreement does not satisfy these criteria, the payments under the agreement are instead treated as severance payments under Q/A–44. If the agreement does satisfy these criteria, then the agreement is treated as an agreement for the performance of services, and the payment are exempt from the definition of *parachute payment* to the extent the payments are show to be reasonable compensation under Q/A–42(a)(2).

Application to Tax-Exempt Organizations

Commentators have asked whether a payment with respect to a tax-exempt entity is exempt from the definition of the term *parachute payment*. These proposed regulations clarify that a payment with respect to a tax-exempt entity that would otherwise constitute a parachute payment is exempt from the definition of the term *parachute payment* if the following two conditions are satisfied.

First, the payment must be made by a corporation undergoing a change in ownership or control that is a *tax-exempt organization*, as defined in these proposed regulations. A *tax-exempt organization* is defined as any organization described in section 501(c) that is subject to an express statutory prohibition against inurement of net earnings to the benefit of any private shareholder or individual, an organization described in subsections 501(c)(1) or 501(c)(21), any religious or apostolic organization described in section 501(d), or any qualified tuition program described in section 529.

Second, the organization must meet the definition of *tax-exempt organization*, as defined in these regulations, both immediately before and immediately after the change in ownership or control. If this second condition is not met, a payment made by a *tax-exempt organization* is not exempt from the definition of *parachute payment*.

As noted above, the term *tax-exempt organizations* includes organizations that are described in section 501(c) that already are subject to express statutory rules that prohibit the inurement of the net earnings of such organizations to the benefit of ''any private shareholder or individual.'' Organizations described in the following subsections of 501(c) are *tax-exempt organizations* under application of this rule: 501(c)(3) (including any organization described in subsections 501(e), (f), or (k)), 501(c)(4), 501(c)(6), 501(c)(9), 501(c)(11), 501(c)(13) (but only with respect to those organizations subject to the express anti-inurement provision), 501(c)(19), and 501(c)(26). In light of the existing restrictions on these organizations, the Service and the Treasury Department believe the additional protections of section 280G are unnecessary. In addition, the term *tax-exempt organization* in the proposed regulations includes federal instrumentalities organized under Act of Congress (described in section 501(c)(1)), black lung trusts (described in section 501(c)(21)), certain religious and apostolic organizations (described in section 501(d)) and qualified tuition programs (described in section 529). The Service and the Treasury Department recognize that it may be appropriate to exempt payments made by other types of tax-exempt organizations. Comments are requested on whether any additional categories of organizations should be included in the definition of *tax-exempt organization* for purposes of section 280G.

Definition of Corporation

Under the 1989 proposed regulations, *corporation* is defined by reference to section 7701(a)(3) of the Code. These proposed regulations clarify that the term *corporation,* for purposes of section 280G and the regulations thereunder, includes any entity described in § 301.7701–2(b) such as, for example, a real estate investment trust under section 856(a), a corporation that has mutual or cooperative (rather than stock) ownership, such as a mutual insurance company, a mutual savings bank, or a cooperative bank (as defined in section 7701(a)(32)), and a foreign corporation (as defined in section 7701(a)(5)).

Accordingly, the term *corporation* also includes any entity described in § 301.7701–3(c)(1)(v)(A). That regulation provides, in general, that an entity that claims to be, or is determined to be, an entity that is exempt from taxation under section 501(a) is treated as an association for purposes of the Code. Because the definition of *corporation* includes an association, any entity described in § 301.7701–3(c)(1)(v)(A) is a corporation for purposes of sections 7701 and 280G.

Determination of Excess Parachute Payments

Once all parachute payments are identified, the determination of what portion, if any, of each parachute payment is an excess parachute payment is made. This determination is based on the aggregate present value of all parachute payments. These proposed regulations modify the method described in Q/A–33 of the 1989 proposed regulations for determining the present value of a payment contingent on an uncertain future event or condition. Under Q/A–33 of these proposed regulations, if there is at least a 50-percent probability that the payment will be made, the entire present value of a contingent payment should be included for purposes of determining if there are excess parachute payments. If there is less than a 50-percent probability, then the present value of the contingent payment is not included. Once it is certain whether or not the payment will be made, the 3-times-base amount test in Q/A–30 is reapplied if the initial determination as to whether to include the payment was incorrect. If the inclusion or exclusion of the payment for purposes of Q/A–30 at the time of the change in ownership or control was correct, there is no need to reapply the 3-times-base-amount test. In addition, if it is reasonably estimated that there is a less than 50-percent probability that the payment will be made and the payment is not included in the 3-times-base-amount test, but the payment is later made, the 3-times-base-amount test is not reapplied if the test without regard to the contingent payment resulted in a determination that the individual received (or would receive) excess parachute payments and no base amount is allocated to the contingent payment.

Finally, Q/A–31 provides guidance on determining the present value of an obligation to provide health care over a period of years. Under these proposed regulations, the determination of the present value of this obligation should be calculated in accordance with generally accepted accounting principles. For purposes of Q/A–31, it is permissible for the obligation to provide health care to be measured by projecting the cost of premiums for purchased health care insurance, even if no health care insurance is actually purchased. If the obligation to provide health care is made in coordination with a health care plan that the corporation makes available to a group, then the premiums used for this purpose may be group premiums. This method only applies for purposes of determining present value. Premiums for health care insurance can be used for purposes of determining a corporation's loss of deduction or the excise tax obligation for a disqualified individual only to the extent such premiums are actually paid for health care insurance used to satisfy the corporation's obligation to provide health care.

Timing of the Payment of Tax under Section 4999

In general, the excise tax under section 4999 is due at the time that the payment is considered made under Q/A–11 through 13. Q/A–11(b) of these proposed regulations clarifies that, except as provided in Q/A–12 or 13, a payment is considered made in the taxable year that it is includible in the disqualified individual's gross income, or for benefits excludible from income, in the year the benefit is received. Q/A–11(c) of these proposed regulations permits a disqualified individual, for purposes of section 4999, to treat certain payments as made in the year of the change in ownership or control (or the first year for which a payment contingent on a change in ownership or control is certain to be made), even though the payment is not yet includible in income (or otherwise received). This treatment is not available, however, for a payment if the present value is not reasonably ascertainable within the meaning of section 3121(v) and § 1.3121(v)–1(e)(4) or for a payment related to health benefits or coverage. These proposed regulations indicate in Q/A–11(c) that the Commissioner may provide through published guidance that Q/A–11(c) is or is not available with respect to other types of payments.

According to Q/A–11(c) of these proposed regulations, the payment of the excise tax under section 4999 must be made based on the amount calculated for purposes of determining excess parachute payments. Therefore, to the extent that the determination of whether there is an excess parachute payment is based on an incorrect valuation of the payment, the excise tax payment under this provision is also incorrect.

Proposed Effective Date

These regulations are proposed to apply to any payments that are contingent on a change in ownership or control occurring on or after January 1, 2004. Taxpayers may rely on these proposed regulations until the effective date of the final regulations. Alternatively, taxpayers may rely on the 1989 proposed regulations for any payment contingent on a change in ownership or control that occurs prior to January 1, 2004.

Special Analyses

It has been determined that this notice of proposed rulemaking is not a significant regulatory action as defined in Executive Order 12866. Therefore, a regulatory assessment is not required. It has also been determined that section 553(b) of the Administrative Procedure Act (5 U.S.C. chapter 5) does not apply to these regulations, and, because the regulations do not impose a collection of information on small entities, the Regulatory Flexibility Act (5 U.S.C. chapter 6) does not apply. Pursuant to section 7805(f), this notice of proposed rulemaking will be submitted to the Chief Counsel for Advocacy of the Small Business Administration for comment on its impact on small business.

Comments and Public Hearing

Before these proposed regulations are adopted as final regulations, consideration will be given to any written or electronic comments (a signed original and eight (8) copies) that are submitted timely to the IRS. All comments will be available for public inspection and copying.

A public hearing has been scheduled for June 26, 2002, beginning at 10 a.m. in the IRS Auditorium of the Internal Revenue Building, 1111 Constitution Avenue, NW, Washington, DC. All

visitors must present photo identification to enter the building. Because of access restrictions, visitors will not be admitted beyond the immediate entrance area more than 15 minutes before the hearing starts. For information about having your name placed on the building access list to attend the hearing, see the **FOR FURTHER INFORMATION CONTACT** section of this preamble.

The rules of 26 CFR 601.601(a)(3) apply to the hearing. Persons who wish to present oral comments at the hearing must submit written comments and an outline of the topics to be discussed and the time to be devoted to each topic (signed original and eight (8) copies) by June 5, 2002. A period of 10 minutes will be allotted to each person for making comments. An agenda showing the schedule of speakers will be prepared after the deadline for receiving outlines has passed. Copies of the agenda will be available free of charge at the hearing.

Drafting Information

The principal author of these proposed regulations is Erinn Madden, Office of the Division Counsel/Associate Chief Counsel (Tax Exempt and Government Entities). However, other personnel from the IRS and Treasury Department participated in their development.

List of Subjects in 26 CFR Part 1

Income taxes, Reporting and recordkeeping requirements.

Proposed Amendments to the Regulations

The proposed amendments to 26 CFR part 1 are as follows:

PART I—INCOME TAX; TAXABLE YEARS BEGINNING AFTER DECEMBER 31, 1986

1. The authority citation for part 1 is amended by adding the following entry in numerical order to read in part as follows:

Authority: 26 U.S.C. 7805 * * *

Section 1.280G–1 also issued under 26 U.S.C. 280G (b) and (e). * * *

2. Section § 1.280G–1 is added to read as follows:

§ 1.280G–1 Golden parachute payments.

The following questions and answers relate to the treatment of golden parachute payments under section 280G of the Internal Revenue Code of 1986, as added by section 67 of the Tax Reform Act of 1984 (Pub. L. 98–369; 98 Stat. 585) and amended by section 1804(j) of the Tax Reform Act of 1986 (Pub. L. 99–514; 100 Stat. 2807), section 1018(d)(6)–(8) of the Technical and Miscellaneous Revenue Act of 1988 (Pub. L. 100–647; 102 Stat. 3581), and section 1421 of the Small Business Job Protection Act of 1996 (Pub. L. 104–188, 110 Stat. 1755). The following is a table of contents for this section:

Overview:
- Effect of section 280G Q/A–1
- Meaning of ''parachute payment'' Q/A–2
- Meaning of ''excess parachute payment'' Q/A–3
- Effective date of section 280G Q/A–4

Exempt Payments:
- Exempt payments generally Q/A–5
- Exempt payments with respect to certain corporations Q/A–6
- Shareholder approval requirements Q/A–7
- Exempt payments under a qualified plan Q/A–8
- Exempt payments of reasonable compensation Q/A–9

Payor of Parachute Payments Q/A–10

Payments in the Nature of Compensation:
- The nature of compensation Q/A–11
- Property transfers Q/A–12
- Stock options Q/A–13
- Reduction of amount of payment by consideration paid Q/A–14

Disqualified Individuals:
- Meaning of ''disqualified individual'' Q/A–15
- Personal service corporation treated as individual Q/A–16
- Meaning of ''shareholder'' Q/A–17
- Meaning of ''officer'' Q/A–18
- Meaning of ''highly-compensated individual'' Q/A–19
- Meaning of ''disqualified individual determination period'' Q/A–20
- Meaning of ''compensation'' Q/A–21

Contingent on Change in Ownership or Control:
- General rules for determining payments contingent on change Q/A–22
- Payments under agreement entered into after change Q/A–23
- Amount of payment contingent on change Q/A–24
- Presumption that payment is contingent on change Q/A–25, 26
- Change in ownership or control Q/A–27, 28, 29

Three-Times-Base-Amount Test for Parachute Payments:
- Three-times-base-amount test Q/A–30
- Determination of present value Q/A–31, 32, 33
- Meaning of ''base amount'' Q/A–34
- Meaning of ''base period'' Q/A–35
- Special rule for determining base amount Q/A–36

Securities Violation Parachute Payments Q/A–37

Computation and Reduction of Excess Parachute Payments:
- Computation of excess parachute payments Q/A–38
- Reduction by reasonable compensation Q/A–39

Determination of Reasonable Compensation:
- General criteria for determining reasonable compensation Q/A–40
- Types of payments generally considered reasonable compensation Q/A–41, 42, 43

Treatment of severance payments Q/A–44
Miscellaneous rules:
Definition of corporation Q/A–45
Treatment of affiliated group as one corporation Q/A–46
Effective date:
General effective date of section 280G Q/A–47
Effective date of regulations Q/A–48

Overview

Q–1: What is the effect of Internal Revenue Code section 280G?

A–1: (a) Section 280G disallows a deduction for any excess parachute payment paid or accrued. For rules relating to the imposition of a nondeductible 20-percent excise tax on the recipient of any excess parachute payment, see Internal Revenue Code sections 4999, 275(a)(6), and 3121(v)(2)(A).

(b) The disallowance of a deduction under section 280G is not contingent on the imposition of the excise tax under section 4999. The imposition of the excise tax under section 4999 is not contingent on the disallowance of a deduction under section 280G. Thus, for example, because the imposition of the excise tax under section 4999 is not contingent on the disallowance of a deduction under section 280G, a payee may be subject to the 20-percent excise tax under section 4999 even though the disallowance of the deduction for the excess parachute payment may not directly affect the federal taxable income of the payor.

Q–2: What is a parachute payment for purposes of section 280G?

A–2: (a) The term *parachute payment* means any payment (other than an exempt payment described in Q/A–5) that—

(1) Is in the nature of compensation;

(2) Is made or is to be made to (or for the benefit of) a disqualified individual;

(3) Is contingent on a change—

(i) In the ownership of a corporation;

(ii) In the effective control of a corporation; or

(iii) In the ownership of a substantial portion of the assets of a corporation; and

(4) Has (together with other payments described in paragraphs (a)(1), (2), and (3) of this A–2 with respect to the same disqualified individual) an aggregate present value of at least 3 times the individual's base amount.

(b) Hereinafter, a change referred to in paragraph (a)(3) of this A–2 is referred to as a change in ownership or control. For a discussion of the application of paragraph (a)(1), see Q/A–11 through Q/A–14; paragraph (a)(2), Q/A–15 through Q/A–21; paragraph (a)(3), Q/A–22 through Q/A–29; and paragraph (a)(4), Q/A–30 through Q/A–36.

(c) The term *parachute payment* also includes any payment in the nature of compensation to (or for the benefit of) a disqualified individual that is pursuant to an agreement that violates a generally enforced securities law or regulation. This type of parachute payment is referred to in this section as a securities violation parachute payment. See Q/A–37 for the definition and treatment of securities violation parachute payments.

Q–3: What is an excess parachute payment for purposes of section 280G?

A–3: The term excess *parachute payment* means an amount equal to the excess of any parachute payment over the portion of the base amount allocated to such payment. Subject to certain exceptions and limitations, an excess parachute payment is reduced by any portion of the payment which the taxpayer establishes by clear and convincing evidence is reasonable compensation for personal services actually rendered by the disqualified individual before the date of the change in ownership or control. For a discussion of the nonreduction of a securities violation parachute payment by reasonable compensation, see Q/A–37. For a discussion of the computation of excess parachute payments and their reduction by reasonable compensation, see Q/A–38 through Q/A–44.

Q–4: What is the effective date of section 280G and this section?

A–4: In general, section 280G applies to payments under agreements entered into or renewed after June 14, 1984. Section 280G also applies to certain payments under agreements entered into on or before June 14, 1984, and amended or supplemented in significant relevant respect after that date. This section applies to any payment contingent on a change in ownership or control which occurs on or after January 1, 2004. For a discussion of the application of the effective date, see Q/A–47 and Q/A–48.

Exempt Payments

Q–5: Are some types of payments exempt from the definition of the term *parachute payment?*

A–5: (a) Yes, the following five types of payments are exempt from the definition of *parachute payment*—

(1) Payments with respect to a small business corporation (described in Q/A–6 of this section);

(2) Certain payments with respect to a corporation no stock in which is readily tradeable on an established securities market (or otherwise) (described in Q/A–6 of this section);

(3) Payments to or from a qualified plan (described in Q/A–8 of this section);

(4) Certain payments made by a corporation undergoing a change in ownership or control that is described in any of the following sections of the Internal Revenue Code: section 501(c) (but only if such organization is subject to an express statutory prohibition against inurement of net earnings to the benefit of any private shareholder or individual, or if the organization is described in section 501(c)(1) or section 501(c)(21)), section 501(d), or section 529, collectively referred to as *tax-exempt organizations* (described in Q/A–6 of this section); and

(5) Certain payments of reasonable compensation for services to be rendered on or after the change in ownership or control (described in Q/A–9 of this section).

(b) Deductions for payments exempt from the definition of *parachute payment* are not disallowed by section 280G, and such exempt payments are not subject to the 20-percent excise tax of section 4999. In addition, such exempt payments are not taken into account in applying the 3-times-base-amount test of Q/A–30 of this section.

Q–6: Which payments with respect to a corporation referred to in paragraph (a)(1), (a)(2), or (a)(4) of Q/A–5 of this section are exempt from the definition of *parachute payment?*

A–6: (a) The term *parachute payment* does not include—

(1) Any payment to a disqualified individual with respect to a corporation which (immediately before the change in ownership or control) was a small business corporation (as defined in section 1361(b) but without regard to section 1361(b)(1)(C) thereof),

(2) Any payment to a disqualified individual with respect to a corporation (other than a small business corporation described in paragraph (a)(1) of this A–6) if—

(i) Immediately before the change in ownership or control, no stock in such

corporation was readily tradeable on an established securities market or otherwise; and

(ii) The shareholder approval requirements described in Q/A–7 of this section are met with respect to such payment; or

(3) Any payment to a disqualified individual made by a corporation which is a tax-exempt organization (as defined in paragraph (a)(4) of Q/A–5 of this section), but only if the corporation meets the definition of a tax-exempt organization both immediately before and immediately after the change in ownership or control.

(b) For purposes of paragraph (a)(1) of this A–6, the members of an affiliated group are not treated as one corporation.

(c) The requirements of paragraph (a)(2)(i) of this A–6 are not met if a substantial portion of the assets of a corporation undergoing a change in ownership or control consists (directly or indirectly) of stock in another entity (or any ownership interest in such entity) and stock of such entity (or any ownership interest in such entity) is readily tradeable on an established securities market or otherwise. For this purpose, such stock constitutes a substantial portion of the assets of an entity if the total fair market value of the stock is equal to or exceeds one third of the total gross fair market value of all of the assets of the entity. If a corporation is a member of an affiliated group (which group is treated as one corporation under A–46 of this section), the requirements of paragraph (a)(2)(i) of this A–6 are not met if any stock in any member of such group is readily tradeable on an established securities market or otherwise.

(d) For purposes of paragraph (a)(2)(i) of this A–6, the term *stock* does not include stock described in section 1504(a)(4) if the payment does not adversely affect the redemption and liquidation rights of any shareholder owning such stock.

(e) For purposes of paragraph (a)(2)(i) of this A–6, stock is treated as readily tradeable if it is regularly quoted by brokers or dealers making a market in such stock.

(f) For purposes of paragraph (a)(2)(i) of this A–6, the term *established securities market* means an established securities market as defined in § 1.897–1(m).

(g) The following examples illustrate the application of this exemption:

Example 1. A small business corporation (within the meaning of paragraph (a)(1) of this A–6) operates two businesses. The corporation sells the assets of one of its businesses, and these assets represent a substantial portion of the assets of the corporation. Because of the sale, the corporation terminates its employment relationship with persons employed in the business the assets of which are sold. Several of these employees are highly-compensated individuals to whom the owners of the corporation make severance payments in excess of 3 times each employee's base amount. Since the corporation is a small business corporation immediately before the change in ownership or control, the payments are not parachute payments.

Example 2. Assume the same facts as in *Example 1,* except that the corporation is not a small business corporation within the meaning of paragraph (a)(1) of this A–6. If no stock in the corporation is readily tradeable on an established securities market (or otherwise) immediately before the change in ownership or control and the shareholder approval requirements described in Q/A–7 of this section are met, the payments are not parachute payments.

Example 3. Stock of Corporation S is wholly owned by Corporation P, stock in which is readily tradeable on an established securities market. The Corporation S stock equals or exceeds one third of the total gross fair market value of Corporation P, and thus, represents a substantial portion of the assets of Corporation P. Corporation S makes severance payments to several of its highly-compensated individuals that are parachute payments under section 280G and Q/A–2 of this section. Because stock in Corporation P is readily tradeable on an established securities market, the payments are not exempt from the definition of parachute payments under this A–6.

Example 4. A is a corporation described in section 501(c)(3), and accordingly, its net earnings are prohibited from inuring to the benefit of any private shareholder or individual. A transfers substantially all of its assets to another corporation resulting in a change in ownership or control. Contingent on the change in ownership or control, A makes a payment that, but for the potential application of the exemption described in A–5(a)(4), would constitute a *parachute payment.* However, one or more aspects of the transaction that constitutes the change in ownership or control causes A to fail to be described in section 501(c)(3). Accordingly, A fails to meet the definition of a *tax-exempt organization* both immediately before and immediately after the change in ownership or control, as required by this A–6. As a result, the payment made by A that was contingent on the change in ownership or control is not exempt from the definition of *parachute payment* under this A–6.

Example 5. B is a corporation described in section 501(c)(15). B does not meet the definition of a *tax-exempt organization* because section 501(c)(15) does not expressly prohibit inurement of B's net earnings to the benefit of any private shareholder or individual. Accordingly, if B has a change in ownership or control and makes a payment pays or accrues a payment that would otherwise meet the definition of a *parachute payment,* such payment is not exempt from the definition of the term *parachute payment* for purposes of this A–6.

Q–7: How are the shareholder approval requirements referred to in paragraph (a)(2)(ii) of Q/A–6 of this section met?

A–7: (a) *General rule.* The shareholder approval requirements referred to in paragraph (a)(2)(ii) of Q/A–6 of this section are met with respect to any payment if—

(1) Such payment was approved by more than 75 percent of the voting power of all outstanding stock of the corporation entitled to vote (as described in this A–7) immediately before the change in ownership or control; and

(2) There was adequate disclosure to all persons entitled to vote (as described in this A–7) of all material facts concerning all material payments which (but for Q/A–6 of this section) would be parachute payments with respect to a disqualified individual.

(b) *Voting requirements*—(1) *General rule.* The vote described in paragraph (a)(1) of this A–7 must determine the right of the disqualified individual to receive the payment, or, in the case of a payment made before the vote, the right of the disqualified individual to retain the payment. For purposes of this A–7, the vote can be no less than the full amount of the payment(s) to be made. The total payment(s) submitted for shareholder approval must be separately approved by the shareholders. Shareholder approval can be a single vote on all payments submitted to vote, including payments to more than one disqualified individual. The requirements of this paragraph (b)(1) are not satisfied if approval of the change in ownership or control is contingent on the approval of any payment that would be a parachute payment but for Q/A–6 of this section to a disqualified individual.

(2) *Special rule for vote within 3 months before change.* A vote to approve the payment does not fail to be a vote of the outstanding stock of the corporation entitled to vote immediately before the change in ownership or control merely because the determination of the shareholders entitled to vote on the payment is based on the shareholders of record at the time of any shareholder vote taken in connection with a transaction or event giving rise to such change in ownership or control and within the three-month period ending on date of the change in ownership or control, provided the disclosure requirements described in paragraph (c) of this A–7 are met.

(3) *Entity shareholder.* Approval of a payment by any shareholder that is not an individual (an entity shareholder) generally must be made by the person

authorized by the entity shareholder to approve the payment. However, if a substantial portion of the assets of an entity shareholder consists (directly or indirectly) of stock in the corporation undergoing the change in ownership or control, approval of the payment by that entity shareholder must be made by a separate vote of the persons who hold, immediately before the change in ownership or control, more than 75 percent of the voting power of the entity shareholder. The preceding sentence does not apply if the value of the stock of the corporation owned, directly or indirectly, by or for the entity shareholder does not exceed 1 percent of the total value of the outstanding stock of the corporation. Where approval of a payment by an entity shareholder must be made by a separate vote of the owners of the entity shareholder, the normal voting rights of the entity shareholder determine which owners shall vote. For purposes of this A–7, stock represents a substantial portion of the assets of an entity shareholder if the total fair market value of the stock held by the entity shareholder in the corporation undergoing the change in ownership or control is equal to or exceeds one third of the total fair market value of all of the assets of the entity shareholder.

(4) *Attribution of stock ownership.* In determining the persons who comprise the ''more than 75 percent'' group referred to in paragraph (a)(1) or (b)(3) of this A–7, stock is not counted as outstanding stock if the stock is actually owned or constructively owned under section 318(a) by or for a disqualified individual who receives (or is to receive) payments that would be parachute payments if the shareholder approval requirements described in paragraph (a) of this A–7 were not met. Likewise, stock is not counted as outstanding stock if the owner is considered under section 318(a) to own any part of the stock owned directly or indirectly by or for a disqualified individual described in the preceding sentence. In addition, if a partner authorized by a partnership to approve a payment is a disqualified individual with respect to the corporation undergoing a change in ownership or control, none of the stock held by the partnership is considered outstanding stock. However, if all persons who hold voting power in the corporation are disqualified individuals or related persons described in either of the two preceding sentences, then stock owned by such persons is counted as outstanding stock.

(5) *Disqualified individuals.* To satisfy the approval requirements of paragraph (a) of this A–7, the vote of a disqualified individual who receives (or is to receive) a payment that would be a parachute payment if the shareholder approval requirements described in paragraph (a) of this A–7 were not met is not considered in determining whether the more than 75 percent vote has been obtained for purposes of any vote under paragraph (a) of this A–7. However, if all persons who hold voting power in the corporation are disqualified individuals or related persons, then votes by such persons are considered in determining whether the more than 75% vote has been obtained.

(c) *Adequate disclosure.* To be adequate disclosure for purposes of paragraph (a)(2) of this A–7, disclosure must be full and truthful disclosure of the material facts and such additional information as is necessary to make the disclosure not materially misleading at the time the disclosure was made. Disclosure of such information must be made to every shareholder of the corporation entitled to vote under this A–7. For each disqualified individual, material facts that must be disclosed include the total amount of the payments that would be parachute payments if the shareholder approval requirements described in paragraph (a) of this A–7 were not met and a brief description of each payment (e.g., accelerated vesting of options, bonus, or salary). An omitted fact is considered a material fact if there is a substantial likelihood that a reasonable shareholder would consider it important.

(d) *Corporation without shareholders.* If a corporation does not have shareholders, the exemption described in Q/A–6(a)(2) of this section and the shareholder approval requirements described in this A–7 do not apply. For purposes of this paragraph (d), a shareholder does not include a member in an association, joint stock company, or insurance company.

(e) *Examples.* The following examples illustrate the application of this A–7:

Example 1. Corporation S has two shareholders—Corporation P, which owns 76 percent of the stock of Corporation S, and A, a disqualified individual. No stock of Corporation P or S is readily tradeable on an established securities market (or otherwise). Stock of Corporation S equals or exceeds one third of the assets of Corporation P, and thus, represents a substantial portion of the assets of Corporation P. All of the stock of Corporation S is sold to Corporation M. Contingent on the change in ownership of Corporation S, severance payments are made to the officers of Corporation S in excess of 3 times each officer's base amount. If the payments are approved by a separate vote of the persons who hold, immediately before the sale, more than 75 percent of the voting power of the outstanding stock of Corporation P and the disclosure rules of paragraph (a)(2) of this A–7 are complied with, the shareholder approval requirements of this A–7 are met, and the payments are exempt from the definition of *parachute payment* pursuant to A–6 of this section.

Example 2. Corporation M is wholly owned by Partnership P. No interest in either M or P is readily tradeable on an established securities market (or otherwise). Stock of Corporation M equals or exceeds one third of the assets of Partnership P, and thus, represents a substantial portion of the assets of Partnership P. Corporation M undergoes a change in ownership or control. Partnership P has one general partner and 200 limited partners. None of the limited partners are entitled to vote on issues involving the management of the partnership investments. If the payments that would be parachute payments if the shareholder approval requirements of this A–7 are not met are approved by the general partner and the disclosure rules of paragraph (a)(2) of this A–7 are complied with, the shareholder approval requirements of this A–7 are met, and the payments are exempt from the definition of *parachute payment* pursuant to A–6 of this section.

Example 3. Corporation A has several shareholders including X and Y, who are disqualified individuals with respect to Corporation A. No stock of Corporation A is readily tradeable on an established securities market (or otherwise). Corporation A undergoes a change in ownership or control. Contingent on the change, severance payments are payable to X and Y that are in excess of 3 times each individual's base amount. To determine whether the approval requirements of paragraph (a)(1) of this A–7 are satisfied regarding the payments to X and Y, the stock of X and Y is not considered outstanding, and X and Y are not eligible to vote.

Example 4. Assume the same facts as in *Example 3* except that after adequate disclosure (within the meaning of paragraph (a)(2) of this A–7) to all shareholders entitled to vote, 60 percent of the shareholders who are entitled to vote approve the payments to X and Y. Because more than 75 percent of the shareholders did not approve the payments to X and Y, the shareholder approval requirements of paragraph (a)(1) of this A–7 are not satisfied, and the payments are not made to X and Y.

Example 5. Assume the same facts as in *Example 3* except that disclosure of all the material facts regarding the payments to X and Y is made to two of Corporation A's shareholders, who collectively own 80 percent of Corporation A's stock entitled to vote and approve the payment. Assume further that no disclosure of the material facts regarding the payments to X and Y is made to other Corporation A shareholders who are entitled to vote within the meaning of this A–7. Because disclosure regarding the payments to X and Y is not made to all of Corporation A's shareholders who were entitled to vote, the disclosure requirements of paragraph (a)(2) of this A–7 are not met, and the payments are not exempt from the definition of *parachute payment* pursuant to Q/A–6.

Example 6. Corporation C has three shareholders—Partnership, which owns 20 percent of the stock of Corporation C; A, an individual who owns 60 percent of the stock of Corporation C; and B, an individual who owns 20 percent of Corporation C. Stock of Corporation C does not represent a substantial portion of the assets of Partnership. No interest in either Partnership or Corporation C is readily tradeable on an established securities market (or otherwise). P, a one-third partner in Partnership, is a disqualified individual with respect to Corporation C. Corporation C undergoes a change in ownership or control. Contingent on the change, a severance payment is payable to P in excess of 3 times P's base amount. To determine the persons who comprise the ''more than 75 percent group'' referred to in paragraph (a)(1) of this A–7 who must approve the payment to P, one third of the stock held by Partnership is not considered outstanding stock. If, however, P is the person authorized by Partnership to approve the payment, none of the shares of Partnership are considered outstanding stock.

Example 7. X, an employee of Corporation E, is a disqualified individual with respect to Corporation E. No stock in Corporation E is readily tradeable on an established securities market (or otherwise). X, Y, and Z are all employees and disqualified individuals with respect to Corporation E. Each individual has a base amount of $100,000. Corporation E undergoes a change in ownership or control. Contingent on the change, a severance payment of $400,000 is payable to X; $600,000 is payable to Y; and $1,000,000 is payable to Z. Corporation E provides a ballot to each Corporation E shareholder entitled to vote under paragraph(a)(1) of this A–7 listing the payments of $400,000 to X; $600,000 to Y; and $1,000,000 to Z. Next to each name and corresponding amount on the ballot, Corporation E requests approval (with a ''yes'' and ''no'' box) of each total payment to be made to each individual and states that if the payment is not approved the payment will not be made. Adequate disclosure, within the meaning of this A–7 is made to each shareholder entitled to vote under this A–7. More than 75 percent of the Corporation E shareholders who are entitled to vote under paragraph (a)(1) of this A–7, approve each payment to each individual. The shareholder approval requirements of this A–7 are met, and the payments are exempt from the definition of *parachute payment* pursuant to A–6 of this section.

Example 8. Assume the same facts as in *Example 7* except that the ballot does not request approval of each total payment to each individual separately. Instead, the ballot states that $2,000,000 in payments will be made to X, Y, and Z and requests approval of all of the $2,000,000 payments. Assuming the nature of the payments to X, Y, and Z are separately described to the shareholders entitled to vote under this A–7, the shareholder approval requirements of paragraph (a)(1) of this A–7 are met, and the payments are exempt from the definition of *parachute payment* pursuant to A–6 of this section.

Example 9. B, an employee of Corporation X, is a disqualified individual with respect to Corporation X. Stock of Corporation X is not readily tradeable on an established securities market (or otherwise). Corporation X undergoes a change in ownership or control. B's base amount is $205,000. Under B's employment agreement with Corporation X, in the event of a change in ownership or control, B's stock options will vest and B will receive a severance and bonus payment. Contingent on the change, B's stock options immediately vest with a fair market value of $500,000, $200,000 of which is contingent on the change, and B will receive a $200,000 bonus payment and a $400,000 severance payment. Corporation X distributes a ballot to every shareholder of Corporation X who immediately before the change is entitled to vote. The ballot lists the following payments to be made to B: the contingent payment of $200,000 attributable to options, a $200,000 bonus payment, and a $400,000 severance payment. The ballot requests shareholder approval of the $200,000 bonus payment to B and states that whether or not the $200,000 bonus payment is approved, B will receive $200,000 attributable to options and a $400,000 severance payment. More than 75 percent of the shareholders entitled to vote approve the $200,000 bonus payment to B. The shareholder approval requirements of this A–7 are met, and the $200,000 payment is exempt from the definition of *parachute payment* pursuant to A–6 of this section.

Q–8: Which payments under a qualified plan are exempt from the definition of *parachute payment?*

A–8: The term *parachute payment* does not include any payment to or from—

(a) A plan described in section 401(a) which includes a trust exempt from tax under section 501(a);

(b) An annuity plan described in section 403(a);

(c) A simplified employee pension (as defined in section 408(k)); or

(d) A simple retirement account (as defined in section 408(p)).

Q–9: Which payments of reasonable compensation are exempt from the definition of *parachute payment?*

A–9: Except in the case of securities violation parachute payments, the term parachute payment does not include any payment (or portion thereof) which the taxpayer establishes by clear and convincing evidence is reasonable compensation for personal services to be rendered by the disqualified individual on or after the date of the change in ownership or control. See Q/A–37 of this section for the definition and treatment of securities violation parachute payments. See Q/A–38 through Q/A–44 of this section for rules on determining amounts of reasonable compensation.

Payor of Parachute Payments

Q–10: Who may be the payor of parachute payments?

A–10: Parachute payments within the meaning of Q/A–2 of this section may be paid, directly or indirectly, by—

(a) The corporation referred to in paragraph (a)(3) of Q/A–2 of this section,

(b) A person acquiring ownership or effective control of that corporation or ownership of a substantial portion of that corporation's assets, or

(c) Any person whose relationship to such corporation or other person is such as to require attribution of stock ownership between the parties under section 318(a).

Payments in the Nature of Compensation

Q–11: What types of payments are in the nature of compensation?

A–11: (a) *General rule.* For purposes of this section, all payments—in whatever form—are payments in the nature of compensation if they arise out of an employment relationship or are associated with the performance of services. For this purpose, the performance of services includes holding oneself out as available to perform services and refraining from performing services (such as under a covenant not to compete or similar arrangement). Payments in the nature of compensation include (but are not limited to) wages and salary, bonuses, severance pay, fringe benefits, and pension benefits and other deferred compensation (including any amount characterized by the parties as interest thereon). A payment in the nature of compensation also includes cash when paid, the value of the right to receive cash, or a transfer of property. However, payments in the nature of compensation do not include attorney's fees or court costs paid or incurred in connection with the payment of any amount described in paragraphs (a)(1), (2), and (3) of Q/A–2 of this section or a reasonable rate of interest accrued on any amount during the period the parties contest whether a payment will be made.

(b) *When payment is considered to be made.* Except as otherwise provided in A–11 through Q/A–13 of this section, a payment in the nature of compensation is considered made (and is subject to the excise tax under section 4999) in the taxable year in which it is includible in the disqualified individual's gross income or, in the case of fringe benefits and other benefits excludible from income, in the taxable year the benefits are received.

(c) *Pre-payment rule.* Notwithstanding the general rule described in paragraph (b) of this A–11, for purposes of section 4999, a disqualified individual is

permitted to treat a payment as received in the year of the change in ownership or control or, if later, the first year in which the payment (or payments) is certain to be made without regard to the year in which the payment (or payments) is includible in income (or otherwise received). The payment of the excise tax for purposes of section 4999 must be based on the amount calculated for purposes of determining any excess parachute payments. However, a disqualified individual may not apply this paragraph (c) of this A–11 to a payment to be made in cash if the present value of the payment would be considered not reasonably ascertainable under section 3121(v) and § 1.3121(v)–1(e)(4) or a payment related to health benefits or coverage. The Commissioner is permitted to provide that this paragraph (c) is or is not available for certain types of payments.

(d) *Transfers of property.* Transfers of property are treated as payments for purposes of this A–11. See Q/A–12 of this section for rules on determining when such payments are considered made and the amount of such payments. See Q/A–13 of this section for special rules on transfers of statutory and nonstatutory stock options.

Q–12: If a property transfer to a disqualified individual is a payment in the nature of compensation, when is the payment considered made (or to be made), and how is the amount of the payment determined?

A–12: (a) Except as provided in this A–12 and Q/A–13 of this section, a transfer of property is considered a payment made (or to be made) in the taxable year in which the property transferred is includible in the gross income of the disqualified individual under section 83 and the regulations thereunder. Thus, in general, such a payment is considered made (or to be made) when the property is transferred (as defined in § 1.83–3(a)) to the disqualified individual and becomes substantially vested (as defined in § 1.83–3(b) and (j)) in such individual. In such case, the amount of the payment is determined under section 83 and the regulations thereunder. Thus, in general, the amount of the payment is equal to the excess of the fair market value of the transferred property (determined without regard to any lapse restriction, as defined in § 1.83–3(i)) at the time that the property becomes substantially vested, over the amount (if any) paid for the property.

(b) An election made by a disqualified individual under section 83(b) with respect to transferred property will not apply for purposes of this A–12. Thus, even if such an election is made with respect to a property transfer that is a payment in the nature of compensation, the payment is generally considered made (or to be made) when the property is transferred to and becomes substantially vested in such individual.

(c) See Q/A–13 of this section for rules on applying this A–12 to transfers of stock options.

(d) The following example illustrates the principles of this A–12:

Example. On January 1, 2006, Corporation M gives to A, a disqualified individual, a bonus of 100 shares of Corporation M stock in connection with the performance of services to Corporation M. Under the terms of the bonus arrangement A is obligated to return the Corporation M stock to Corporation M unless the earnings of Corporation M double by January 1, 2009, or there is a change in ownership or control of Corporation M before that date. A's rights in the stock are treated as substantially nonvested (within the meaning of § 1.83–3(b)) during that period because A's rights in the stock are subject to a substantial risk of forfeiture (within the meaning of § 1.83–3(c)) and are nontransferable (within the meaning of § 1.83–3(d)). On January 1, 2008, a change in ownership or control of Corporation M occurs. On that day, the fair market value of the Corporation M stock is $250 per share. Because A's rights in the Corporation M stock become substantially vested (within the meaning of § 1.83–3(b)) on that day, the payment is considered made on that day, and the amount of the payment for purposes of this section is equal to $25,000 (100 × $250). See Q/A–38 through 41 for rules relating to the reduction of the excess parachute payment by the portion of the payment which is established to be reasonable compensation for personal services actually rendered before the date of a change in ownership or control.

Q–13: How are transfers of statutory and nonstatutory stock options treated?

A–13: (a) For purposes of this section, an option (including an option to which section 421 applies) is treated as property that is transferred not later than the time at which the option becomes substantially vested (whether or not the option has a readily ascertainable fair market value as defined in § 1.83–7(b)). Thus, for purposes of this section, the vesting of such an option is treated as a payment in the nature of compensation. The value of an option with an ascertainable fair market value at the time the option vests is determined under all the facts and circumstances in the particular case. Factors relevant to such a determination include, but are not limited to: the difference between the option's exercise price and the value of the property subject to the option at the time of vesting; the probability of the value of such property increasing or decreasing; and the length of the period during which the option can be exercised. Valuation may be determined by any method prescribed by the Commissioner in published guidance for purposes of this A–13. See Q/A–33 of this section for the treatment of options the granting or vesting of which is contingent on a change in ownership or control and that do not have an ascertainable fair market value at the time of granting or vesting.

(b) Any money or other property transferred to the disqualified individual on the exercise, or as consideration on the sale or other disposition, of an option described in paragraph (a) of this A–13 after the time such option vests is not treated as a payment in the nature of compensation to the disqualified individual under Q/A–11 of this section. Nonetheless, the amount of the otherwise allowable deduction under section 162 or 212 with respect to such transfer is reduced by the amount of the payment described in paragraph (a) of this A–13 treated as an excess parachute payment.

Q–14: Are payments in the nature of compensation reduced by consideration paid by the disqualified individual?

A–14: Yes, to the extent not otherwise taken into account under Q/A–12 and Q/A–13 of this section, the amount of any payment in the nature of compensation is reduced by the amount of any money or the fair market value of any property (owned by the disqualified individual without restriction) that is (or will be) transferred by the disqualified individual in exchange for the payment. For purposes of the preceding sentence, the fair market value of property is determined as of the date the property is transferred by the disqualified individual.

Disqualified Individuals

Q–15: Who is a disqualified individual?

A–15: (a) For purposes of this section, an individual is a disqualified individual with respect to a corporation if, at any time during the *disqualified individual determination period* (as defined in Q/A–20 of this section), the individual is an employee or independent contractor of the corporation and is, with respect to the corporation—

(1) A shareholder (but see Q/A–17 of this section);

(2) An officer (see Q/A–18 of this section); or

(3) A highly-compensated individual (see Q/A–19 of this section).

(b) A director is a disqualified individual with respect to a corporation if, at any time during the *disqualified*

individual determination period (as defined in Q/A–20 of this section), the director is an employee or independent contractor and is, with respect to the corporation, either a shareholder (see Q/A–17 of this section) or a highly-compensated individual (see Q/A–19 of this section).

Q–16: Is a personal service corporation treated as an individual?

A–16: (a) Yes. For purposes of this section, a personal service corporation (as defined in section 269A(b)(1)), or a noncorporate entity that would be a personal service corporation if it were a corporation, is treated as an individual.

(b) The following example illustrates the principles of this A–16:

Example. Corporation N, a personal service corporation (as defined in section 269A(b)(1)), has a single individual as its sole shareholder and employee. Corporation N performs personal services for Corporation M. The compensation paid to Corporation N by Corporation M puts Corporation N within the group of the highly-compensated individuals of Corporation M as determined under A–19 of this section. Thus, Corporation N is treated as a highly-compensated individual with respect to Corporation M.

Q–17: Are all shareholders of a corporation considered shareholders for purposes of paragraph (a)(1) of Q/A–15 of this section?

A–17: (a) No, only an individual who owns stock of a corporation with a fair market value that exceeds 1 percent of the fair market value of the outstanding shares of all classes of the corporation's stock is treated as a disqualified individual with respect to the corporation by reason of stock ownership. An individual who owns a lesser amount of stock may, however, be a disqualified individual with respect to the corporation if such individual is an officer or highly-compensated individual with respect to the corporation. For purposes of determining the amount of stock owned by an individual, the constructive ownership rules of section 318(a) apply.

(b) The following examples illustrates the principles of this A–17:

Example 1. E, an employee of Corporation A, received options under Corporation A's Stock Option Plan. E's stock options vest three years after the date of grant. E is not an officer or highly compensated individual during the disqualified individual determination period and does not own any other Corporation A stock. Two years after the options are granted to E, all of Corporation A's stock is acquired by Corporation B. Under Corporation A's Stock Option Plan, E's options are converted to Corporation B options and the vesting schedule remains the same. To determine whether E is a disqualified individual based on E's stock ownership, the stock underlying the unvested options held by E on the date of the change in ownership or control is not considered constructively owned by E under section 318(a). Because E does not own, or constructively own, Corporation A stock with a fair market value exceeding 1 percent of the total fair market value of all of the outstanding shares of all classes of Corporation A and E is not an officer or highly-compensated individual during the disqualified individual determination period, E is not a disqualified individual within the meaning of A–15 of this section with respect to Corporation A.

Example 2. Assume the same facts as in Example 1 except that Corporation A's Stock Option Plan provides that all unvested options will vest immediately on a change in ownership or control. To determine whether E is a disqualified individual based on E's stock ownership, the stock underlying the options that vest on the change in ownership or control is considered constructively owned by E under section 318(a). If the stock constructively held by E exceeds 1 percent of the total fair market value of all of the outstanding shares of all classes of Corporation A stock, E is a disqualified individual within the meaning of this A–15 of this section with respect to Corporation A.

Example 3. Assume the same facts as in *Example 1* except that E received nonstatutory stock options that are exercisable for stock subject to a substantial risk of forfeiture under section 83. Assume further that under Corporation A's Stock Option Plan, the nonstatutory options will vest on a change in ownership or control. To determine whether E is a disqualified individual based on E's stock ownership, the stock underlying the options that vest on the change in ownership or control is not considered constructively owned by E under section 318(a) because the options are exercisable for stock subject to a substantial risk of forfeiture within the meaning of section 83. Because E does not own, or constructively own, Corporation A stock with a fair market value exceeding 1 percent of the total fair market value of all of the outstanding shares of all classes of Corporation A stock and E is not an officer or highly compensated individual during the disqualified individual determination period, E is not a disqualified individual within the meaning of A–15 of this section with respect to Corporation A.

Q–18: Who is an officer?

A–18: (a) For purposes of this section, whether an individual is an officer with respect to a corporation is determined on the basis of all the facts and circumstances in the particular case (such as the source of the individual's authority, the term for which the individual is elected or appointed, and the nature and extent of the individual's duties). Generally, the term *officer* means an administrative executive who is in regular and continued service. The term officer implies continuity of service and excludes those employed for a special and single transaction. An individual who merely has the title of officer but not the authority of an officer is not considered an officer for purposes of this section. Similarly, an individual who does not have the title of officer but has the authority of an officer is considered an officer for purposes of this section.

(b) An individual who is an officer with respect to any member of an affiliated group that is treated as one corporation pursuant to Q/A–46 of this section is treated as an officer of such one corporation.

(c) No more than 50 employees (or, if less, the greater of 3 employees, or 10 percent of the employees (rounded up to the nearest integer)) of the corporation (in the case of an affiliated group treated as one corporation, each member of the affiliated group) are treated as disqualified individuals with respect to a corporation by reason of being an officer of the corporation. For purposes of the preceding sentence, the number of employees of the corporation is the greatest number of employees the corporation has during the disqualified individual determination period (as defined in Q/A–20 of this section). If the number of officers of the corporation exceeds the number of employees who may be treated as officers under the first sentence of this paragraph (c), then the employees who are treated as officers for purposes of this section are the highest paid 50 employees (or, if less, the greater of 3 employees, or 10 percent of the employees (rounded up to the nearest integer)) of the corporation when ranked on the basis of compensation (as determined under Q/A–21 of this section) paid during the disqualified individual determination period.

Q–19: Who is a highly-compensated individual?

A–19: (a) For purposes of this section, a highly-compensated individual with respect to a corporation is any individual who is, or would be if the individual were an employee, a member of the group consisting of the lesser of the highest paid 1 percent of the employees of the corporation (rounded up to the nearest integer), or the highest paid 250 employees of the corporation, when ranked on the basis of compensation (as determined under Q/A–21 of this section) paid during the disqualified individual determination period (as defined in Q/A–20 of this section). For purposes of the preceding sentence, the number of employees of the corporation is the greatest number of employees the corporation has during the disqualified individual determination period (as defined in Q/A–20 of this section). However, no individual whose annualized

compensation during the disqualified individual determination period is less than the amount described in section 414(q)(1)(B)(i) for the year in which the change in ownership or control occurs will be treated as a highly-compensated individual.

(b) An individual who is not an employee of the corporation is not treated as a highly-compensated individual with respect to the corporation on account of compensation received for performing services (such as brokerage, legal, or investment banking services) in connection with a change in ownership or control of the corporation, if the services are performed in the ordinary course of the individual's trade or business and the individual performs similar services for a significant number of clients unrelated to the corporation.

(c) In determining the total number of employees of a corporation for purposes of this A–19, employees are not counted if they normally work less than 17½ hours per week (as defined in section 414(q)(5)(B) and the regulations thereunder) or if they normally work during not more than 6 months during any year (as defined in section 414(q)(5)(C) and the regulations thereunder). However, an employee who is not counted for purposes of the preceding sentence may still be a highly-compensated individual.

Q–20: What is the disqualified individual determination period?

A–20: The disqualified individual determination period is the twelve-month period prior to and ending on the date of the change in ownership or control of the corporation.

Q–21: How is *compensation* defined for purposes of determining who is a disqualified individual?

A–21: (a) For purposes of determining who is a disqualified individual, the term *compensation* is the compensation which was earned by the individual for services performed for the corporation with respect to which the change in ownership or control occurs (changed corporation), for a predecessor entity, or for a related entity. Such compensation is determined without regard to sections 125, 132(f)(4), 402(e)(3), and 402(h)(1)(B). Thus, for example, compensation includes elective or salary reduction contributions to a cafeteria plan, cash or deferred arrangement or tax-sheltered annuity and amounts credited under a nonqualified deferred compensation plan.

(b) For purposes of this A–21, a predecessor entity is any entity which, as a result of a merger, consolidation, purchase or acquisition of property or stock, corporate separation, or other similar business transaction transfers some or all of its employees to the changed corporation or to a related entity or to a predecessor entity of the changed corporation. The term *related entity* include—

(1) All members of a controlled group of corporations (as defined in section 414(b)) that includes the changed corporation or a predecessor entity;

(2) All trades or business (whether or not incorporated) that are under common control (as defined in section 414(c)) if such group includes the changed corporation or a predecessor entity;

(3) All members of an affiliated service group (as defined in section 414(m)) that includes the changed corporation or a predecessor entity; and

(4) Any other entities required to be aggregated with the changed corporation or a predecessor entity pursuant to section 414(o) and the regulations thereunder (except leasing organizations as defined in section 414(n)).

(c) For purposes of Q/A–18 and Q/A–19 of this section, compensation that was contingent on the change in ownership or control and that was payable in the year of the change is not treated as compensation.

Contingent on Change in Ownership or Control

Q–22: When is a payment contingent on a change in ownership or control?

A–22: (a) In general, a payment is treated as contingent on a change in ownership or control if the payment would not, in fact, have been made had no change in ownership or control occurred, even if the payment is also conditioned on the occurrence of another event. A payment generally is treated as one which would not, in fact, have been made in the absence of a change in ownership or control unless it is substantially certain, at the time of the change, that the payment would have been made whether or not the change occurred. (But see Q/A–23 of this section regarding payments under agreements entered into after a change in ownership or control.) A payment that becomes vested as a result of a change in ownership or control is not treated as a payment which was substantially certain to have been made whether or not the change occurred. For purposes of this A–22, *vested* means the payment is substantially vested within the meaning of § 1.83–3(b) and (j) or the right to the payment is not otherwise subject to a substantial risk of forfeiture.

(b)(1) For purposes of paragraph (a), a payment is treated as contingent on a change in ownership or control if—

(i) The payment is contingent on an event that is closely associated with a change in ownership or control;

(ii) A change in ownership or control actually occurs; and

(iii) The event is materially related to the change in ownership or control.

(2) For purposes of paragraph (b)(1)(i) of this A–22, a payment is treated as contingent on an event that is closely associated with a change in ownership or control unless it is substantially certain, at the time of the event, that the payment would have been made whether or not the event occurred. An event is considered closely associated with a change in ownership or control if the event is of a type often preliminary or subsequent to, or otherwise closely associated with, a change in ownership or control. For example, the following events are considered closely associated with a change in the ownership or control of a corporation: The onset of a tender offer with respect to the corporation; a substantial increase in the market price of the corporation's stock that occurs within a short period (but only if such increase occurs prior to a change in ownership or control); the cessation of the listing of the corporation's stock on an established securities market; the acquisition of more than 5 percent of the corporation's stock by a person (or more than one person acting as a group) not in control of the corporation; the voluntary or involuntary termination of the disqualified individual's employment; a significant reduction in the disqualified individual's job responsibilities; and a change in ownership or control as defined in the disqualified individual's employment agreement (or elsewhere) that does not meet the definition of a change in ownership or control described in Q/A–27, 28, or 29 of this section. Whether other events are treated as closely associated with a change in ownership or control is based on all the facts and circumstances of the particular case.

(3) For purposes of determining whether an event (as described in paragraph (b)(2) of this A–22) is materially related to a change in ownership or control, the event is presumed to be materially related to a change in ownership or control if such event occurs within the period beginning one year before and ending one year after the date of change in ownership or control. If such event occurs outside of the period beginning one year before and ending one year after the date of change in ownership or control, the event is presumed not materially related to the change in ownership or control. A payment does

not fail to be contingent on a change in ownership or control merely because it is also contingent on the occurrence of a second event (without regard to whether the second event is closely associated with or materially related to a change in ownership or control). Similarly, a payment that is treated as contingent on a change because it is contingent on a closely associated event does not fail to be treated as contingent on a change in ownership or control merely because it is also contingent on the occurrence of a second event (without regard to whether the second event is closely associated with or materially related to a change in ownership or control).

(c) A payment that would in fact have been made had no change in ownership or control occurred is treated as contingent on a change in ownership or control if the change in ownership or control (or the occurrence of an event that is closely associated and materially related to a change in ownership or control within the meaning of paragraph (b)(1) of this A–22), accelerates the time at which the payment is made. Thus, for example, if a change in ownership or control accelerates the time of payment of deferred compensation that is vested without regard to the change in ownership or control, the payment may be treated as contingent on the change. See Q/A–24 of this section regarding the portion of a payment that is so treated. See also Q/A–8 of this section regarding the exemption for certain payments under qualified plans and Q/A–40 of this section regarding the treatment of a payment as reasonable compensation.

(d) A payment is treated as contingent on a change in ownership or control even if the employment or independent contractor relationship of the disqualified individual is not terminated (voluntarily or involuntarily) as a result of the change.

(e) The following examples illustrate the principles of this A–22:

Example 1. A corporation grants a stock appreciation right to a disqualified individual, A, more than one year before a change in ownership or control. After the stock appreciation right vests and becomes exercisable, a change in ownership or control of the corporation occurs, and A exercises the right. Assuming neither the granting nor the vesting of the stock appreciation right is contingent on a change in ownership or control, the payment made on exercise is not contingent on the change in ownership or control.

Example 2. A contract between a corporation and B, a disqualified individual, provides that a payment will be made to B if the corporation undergoes a change in ownership or control and B's employment with the corporation is terminated at any time over the succeeding 5 years. Eighteen months later, a change in the ownership of the corporation occurs. Two years after the change in ownership, B's employment is terminated and the payment is made to B. Because it was not substantially certain that the corporation would have made the payment to B on B's termination of employment if there had not been a change in ownership, the payment is treated as contingent on the change in ownership under paragraph (a) of this A–22. This is true even though B's termination of employment is presumed not to be, and in fact may not be, materially related to the change in ownership or control.

Example 3. A contract between a corporation and C, a disqualified individual, provides that a payment will be made to C if C's employment is terminated at any time over the succeeding 3 years (without regard to whether or not there is a change in ownership or control). Eighteen months after the contract is entered into, a change in the ownership of the corporation occurs. Six months after the change in ownership, C's employment is terminated and the payment is made to C. Termination of employment is considered an event closely associated with a change in ownership or control. Because the termination occurred within one year after the date of the change in ownership, the termination of C's employment is presumed to be materially related to the change in ownership under paragraph (b)(3) of this A–22. If this presumption is not successfully rebutted, the payment will be treated as contingent on the change in ownership under paragraph (b) of this A–22.

Example 4. A contract between a corporation and a disqualified individual, D, provides that a payment will be made to D upon the onset of a tender offer for shares of the corporation's stock. A tender offer is made on December 1, 2008, and the payment is made to D. Although the tender offer is unsuccessful, it leads to a negotiated merger with another entity on June 1, 2009, which results in a change in the ownership of the corporation. It was not substantially certain, at the time of the onset of the tender offer, that the payment would have been made had no tender offer taken place. The onset of a tender offer is considered closely associated with a change in ownership or control. Because the tender offer occurred within one year before the date of the change in ownership of the corporation, the onset of the tender offer is presumed to be materially related to the change in ownership. If this presumption is not rebutted, the payment will be treated as contingent on the change in ownership. If no change in ownership or control had occurred, the payment would not be treated as contingent on a change in ownership or control; however, the payment still could be a parachute payment under Q/A–37 of this section if the contract violated a generally enforced securities law or regulation.

Example 5. A contract between a corporation and a disqualified individual, E, provides that a payment will be made to E if the corporation's level of product sales or profits reaches a specified level. At the time the contract was entered into, the parties had no reason to believe that such an increase in the corporation's level of product sales or profits would be preliminary or subsequent to, or otherwise closely associated with, a change in ownership or control of the corporation. Eighteen months later, a change in the ownership of the corporation occurs and within one year after the date of the change, the corporation's level of product sales or profits reaches the specified level. Under these facts and circumstances (and in the absence of contradictory evidence), the increase in product sales or profits of the corporation is not an event closely associated with the change in ownership or control of the corporation. Accordingly, even if the increase is materially related to the change, the payment will not be treated as contingent on a change in ownership or control.

Q–23: May a payment be treated as contingent on a change in ownership or control if the payment is made under an agreement entered into after the change?

A–23: (a) No., payments are not treated as contingent on a change in ownership or control if they are made (or to be made) pursuant to an agreement entered into after the change (a post-change agreement). For this purpose, an agreement that is executed after a change in ownership or control pursuant to a legally enforceable agreement that was entered into before the change is considered to have been entered into before the change. (See Q/A–9 of this section regarding the exemption for reasonable compensation for services rendered on or after a change in ownership or control.) If an individual has a right to receive a parachute payment under an agreement entered into prior to a change in ownership or control (pre-change agreement) and gives up that right as bargained-for consideration for benefits under a post-change agreement, the agreement is treated as a post-change agreement only to the extent the value of the payments under the agreement exceed the value of the payments under the pre-change agreement. To the extent payments under the agreement have the same value as the parachute payments under the pre-change agreement, such payments retain their character as parachute payments subject to this section.

(b) The following examples illustrate the principles of this A–23:

Example 1. Assume that a disqualified individual is an employee of a corporation. A change in ownership or control of the corporation occurs, and thereafter the individual enters into an employment agreement with the acquiring company. Because the agreement is entered into after the change in ownership or control occurs, payments to be made under the agreement are not treated as contingent on the change.

Example 2. Assume the same facts as in *Example 1,* except that the agreement

between the disqualified individual and the acquiring company is executed after the change in ownership or control, pursuant to a legally enforceable agreement entered into before the change. Payments to be made under the agreement may be treated as contingent on the change in ownership or control pursuant to Q/A–22 of this section. However, see Q/A–9 of this section regarding the exemption from the definition of parachute payment for certain amounts of reasonable compensation.

Example 3. Assume the same facts as in *Example 1* except that prior to the change in ownership or control, the individual and corporation enter into an agreement under which the individual will receive parachute payments in the event of a change in ownership or control of the corporation. After the change, the individual agrees to give up the right to parachute payments under the pre-change agreement in exchange for compensation under a new agreement with the acquiring corporation. Because the individual gave up the right to parachute payments under the pre-change agreement in exchange for other payments under the post-change agreement, payments in an amount equal to the parachute payments under the pre-change agreement are treated as contingent on the change in ownership or control under this A–23. Because the post-change agreement was entered into after the change, payments in excess of this amount are not treated as parachute payments.

Q–24: If a payment is treated as contingent on a change in ownership or control, is the full amount of the payment so treated?

A–24: (a)(1) *General rule.* Yes, if the payment is a transfer of property, the amount of the payment is determined under Q/A–12 or Q/A–13 of this section. For all other payments, the amount of the payment is determined under Q/A–11 of this section. However, in certain circumstances, described in paragraphs (b) and (c) of this A–24, only a portion of the payment is treated as contingent on the change. Paragraph (b) of this A–24 applies to a payment that is vested, without regard to the change in ownership or control, and is treated as contingent on the change in ownership or control because the change accelerates the time at which the payment is made. Paragraph (c) of this A–24 applies to a payment that becomes vested as a result of the change in ownership or control if, without regard to the change in ownership or control, the payment was contingent only on the continued performance of services for the corporation for a specified period of time and if the payment is attributable, at least in part, to services performed before the date the payment becomes vested. For purposes of this A–24, for the definition of vested see Q/A–22(a).

(2) *Reduction by reasonable compensation.* The amount of a payment under paragraph (a)(1) of this A–24 is reduced by any portion of such payment that the taxpayer establishes by clear and convincing evidence is reasonable compensation for personal services rendered by the disqualified individual on or after the date of the change of control. See Q/A–9 and Q/A–38 through 44 of this section for rules concerning reasonable compensation. The portion of an amount treated as contingent under paragraph (b) or (c) of this A–24 may not be reduced by reasonable compensation.

(b) *Vested payments.* This paragraph (b) applies if a payment is vested, without regard to the change in ownership or control, and is treated as contingent on the change in ownership or control because the change accelerates the time at which the payment is made. In such case, the portion of the payment, if any, that is treated as contingent on the change in ownership or control is the amount by which the amount of the accelerated payment exceeds the present value of the payment absent the acceleration. If the value of such a payment absent the acceleration is not reasonably ascertainable, and the acceleration of the payment does not significantly increase the present value of the payment absent the acceleration, the present value of the payment absent the acceleration is treated as equal to the amount of the accelerated payment. If the value of the payment absent the acceleration is not reasonably ascertainable, but the acceleration significantly increases the present value of the payment, the future value of such payment is treated as equal to the amount of the accelerated payment. For rules on determining present value, see paragraph (e) of this A–24, Q/A–32, and Q/A–33 of this section.

(c)(1) *Nonvested payments.* This paragraph (c) applies to a payment that becomes vested as a result of the change in ownership or control to the extent that—

(i) Without regard to the change in ownership or control, the payment was contingent only on the continued performance of services for the corporation for a specified period of time; and

(ii) The payment is attributable, at least in part, to the performance of services before the date the payment is made or becomes certain to be made.

(2) The portion of the payment subject to paragraph (c) of this A–24 that is treated as contingent on the change in ownership or control is the lesser of—

(i) The amount of the accelerated payment; or

(ii) The amount described in paragraph (b) of this A–24, plus an amount, as determined in paragraph (c)(4) of this A–24, to reflect the lapse of the obligation to continue to perform services.

(3) For purposes of this paragraph (c) of this A–24, the acceleration of the vesting of a stock option or the lapse of a restriction on restricted stock is considered to significantly increase the value of a payment.

(4) The amount reflecting the lapse of the obligation to continue to perform services (described in paragraph (c)(2)(ii) of this A–24) is 1 percent of the amount of the accelerated payment multiplied by the number of full months between the date that the individual's right to receive the payment is vested and the date that, absent the acceleration, the payment would have been vested. This paragraph (c)(4) applies to the accelerated vesting of a payment in the nature of compensation even if the time at which the payment is made is not accelerated.

(d) *Application of this A–24 to certain payments.*—(1) *Benefits under a nonqualified deferred compensation plan.* In the case of a payment of benefits under a nonqualified deferred compensation plan, paragraph (b) of this A–24 applies to the extent benefits under the plan are vested without regard to the change in ownership or control. Paragraph (c) of this A–24 applies to the extent benefits under the plan become vested as a result of the change in ownership or control and are attributable, at least in part, to the performance of services prior to vesting. Any other payment of benefits under a nonqualified deferred compensation plan is a payment in the nature of compensation subject to the general rule of paragraph (a) of this A–24 and the rules in Q/A–11 of this section.

(2) *Employment agreements.* The general rule of paragraph (a) of this A–24 applies to the payment of amounts due under an employment agreement on a termination of employment or a change in ownership or control that otherwise would be attributable to the performance of services (or refraining from the performance of services) during any period that begins after the date of termination of employment or change in ownership or control, as applicable. For purposes of this paragraph (d)(2) of this A–24, an employment agreement means an agreement between an employee or independent contractor and employer or service recipient which describes, among other things, the amount of compensation or remuneration payable to the employee or independent

contractor. See Q/A–42(b) and 44 of this section for the treatment of the remaining amounts of salary under an employment agreement.

(3) *Vesting due to an event other than services.* Neither paragraph (b) nor (c) of this A–24 applies to a payment if (without regard to the change in ownership or control) vesting of the payment depends on an event other than the performance of services, such as the attainment of a performance goal, and the event does not occur prior to the change in ownership or control. In such circumstances, the full amount of the accelerated payment is treated as contingent on the change in ownership or control under paragraph (a) of this A–24. However, see Q/A–39 of this section for rules relating to the reduction of the excess parachute payment by the portion of the payment which is established to be reasonable compensation for personal services actually rendered before the date of a change in ownership or control.

(e) *Present value.* For purposes of this A–24, the present value of a payment is determined as of the date on which the accelerated payment is made.

(f) *Examples.* The following examples illustrate the principles of this A–24:

Example 1. (i) Corporation maintains a qualified plan and a nonqualified supplemental retirement plan (SERP) for its executives. Benefits under the SERP are not paid to participants until retirement. E, a disqualified individual with respect to Corporation, has a vested account balance of $500,000 under the SERP. A change in ownership or control of Corporation occurs. The SERP provides that in the event of a change in ownership or control, all vested accounts will be paid to SERP participants.

(ii) Because E was vested in $500,000 of benefits under the SERP prior to the change in ownership or control and the change merely accelerated the time at which the payment was made to E, only a portion of the payment, as determined under paragraph (b) of this A–24, is treated as contingent on the change. Thus, the portion of the payment that is treated as contingent on the change is the amount by which the amount of the accelerated payment ($500,000) exceeds the present value of the payment absent the acceleration.

(iii) Assume that instead of having a vested account balance of $500,000 on the date of the change in ownership or control, E will vest in his account balance of $500,000 in 2 years if E continues to perform services for the next 2 years. Assume further that the SERP provides that all unvested SERP benefits vest immediately on a change in ownership or control and are paid to the participants. Because the vesting of the SERP payment, without regard to the change, depends only on the performance of services for a specified period of time and the payment is attributable, in part, to the performance of services before the change in ownership or control, only a portion of the $500,000 payment, as determined under paragraph (c) of this A–24, is treated as contingent on the change. The portion of the payment that is treated as contingent on the change is the lesser of the amount of the accelerated payment or the amount by which the accelerated payment exceeds the present value of the payment absent the acceleration, plus an amount to reflect the lapse of the obligation to continue to perform services.

(iv) Assume further that under the SERP E's vested account balance of $500,000 will be paid to E on the change in ownership or control and an additional $70,000 will be credited to E's account. Because the $500,000 was vested without regard to the change in ownership or control, paragraph (b) of this A–24 applies to the $500,000 payment. Because the $70,000 is not vested, without regard to the change, and is not attributable to the performance of services prior to the change, the entire $70,000 payment is contingent on the change in ownership or control under paragraph (a) of this A–24.

Example 2. As a result of a change in the effective control of a corporation, a disqualified individual with respect to the corporation, D, receives accelerated payment of D's vested account balance in a nonqualified deferred compensation account plan. Actual interest and other earnings on the plan assets are credited to each account as earned before distribution. Investment of the plan assets is not restricted in such a manner as would prevent the earning of a market rate of return on the plan assets. The date on which D would have received D's vested account balance absent the change in ownership or control is uncertain, and the rate of earnings on the plan assets is not fixed. Thus, the amount of the payment absent the acceleration is not reasonably ascertainable. Under these facts, acceleration of the payment does not significantly increase the present value of the payment absent the acceleration, and the present value of the payment absent the acceleration is treated as equal to the amount of the accelerated payment. Accordingly, no portion of the payment is treated as contingent on the change.

Example 3. (i) On January 15, 2006, a corporation and a disqualified individual, F, enter into a contract providing for a retention bonus of $500,000 to be paid to F on January 15, 2011. The payment of the bonus will be forfeited by F if F does not remain employed by the corporation for the entire 5-year period. However, the contract provides that the full amount of the payment will be made immediately on a change in ownership or control of the corporation during the 5-year period. On January 15, 2009, a change in ownership or control of the corporation occurs and the full amount of the payment ($500,000) is made on that date to F. Under these facts, the payment of $500,000 was contingent only on F's performance of services for a specified period and is attributable, in part, to the performance of services before the change in ownership or control. Therefore, only a portion of the payment is treated as contingent on the change. The portion of the payment that is treated as contingent on the change is the amount by which the amount of the accelerated payment (i.e., $500,000, the amount paid to the individual because of the change in ownership) exceeds the present value of the payment that was expected to have been made absent the acceleration (i.e., $406,838, the present value on January 15, 2009, of a $500,000 payment on January 15, 2011), plus $115,000 (1% × 23 months × $500,000) which is the amount reflecting the lapse of the obligation to continue to perform services. Accordingly, the amount of the payment treated as contingent on the change in ownership or control is $208,162, the sum of $93,162 ($500,000 − $406,838) − $115,000). This result is not changed if F actually remains employed until the end of the 5-year period.

(ii) Assume that the contract provides that the retention bonus will vest on a change in ownership or control, but will not be paid until January 15, 2011 (the original date in the contract). Because the payment of $500,000 was contingent only on F's performance of services for a specified period and is attributable, in part, to the performance of services before the change in ownership or control, only a portion of the $500,000 payment is treated as contingent on the change. Because there is no accelerated payment, the portion of the payment treated as contingent on the change is an amount reflecting the lapse of the obligation to continue to perform services which is $115,000 (1% × 23 months × $500,000).

Example 4. (i) On January 15, 2006, a corporation gives to a disqualified individual, in connection with her performance of services to the corporation, a bonus of 1,000 shares of the corporation's stock. Under the terms of the bonus arrangement, the individual is obligated to return the stock to the corporation if she terminates her employment for any reason prior to January 15, 2011. However, if there is a change in the ownership or effective control of the corporation prior to January 15, 2011, she ceases to be obligated to return the stock. The individual's rights in the stock are treated as substantially nonvested (within the meaning of § 1.83–3(b) and (j)) during that period. On January 15, 2008, a change in the ownership of the corporation occurs. On that day, the fair market value of the stock is $500,000.

(ii) Under these facts, the payment was contingent only on performance of services for a specified period and is attributable, in part, to the performance of services before the change in ownership or control. Thus, only a portion of the payment is treated as contingent on the change in ownership or control. The portion of the payment that is treated as contingent on the change is the amount by which the present value of the accelerated payment on January 15, 2009 ($500,000), exceeds the present value of the payment that was expected to have been made on January 15, 2011, plus an amount reflecting the lapse of the obligation to continue to perform services. At the time of the change, it cannot be reasonably ascertained what the value of the stock would been on January 15, 2011. The acceleration of the lapse of a restriction on stock is treated as significantly increasing the

value of the payment. Therefore, the value of such stock on January 15, 2011, is deemed to be $500,000, the amount of the accelerated payment. The present value on January 15, 2009, of a $500,000 payment to be made on January 15, 2011, is $406,838. Thus, the portion of the payment treated as contingent on the change is $208,162, the sum of $93,162 ($500,000 − $406,838), plus $115,000 [1% × 23 months × $500,000], the amount reflecting the lapse of the obligation to continue to perform services.

Example 5. (i) On January 15, 2006, a corporation grants to a disqualified individual nonqualified stock options to purchase 30,000 shares of the corporation's stock. The options do not have a readily ascertainable fair market value at the time of grant. The options will be forfeited by the individual if he fails to perform personal services for the corporation until January 15, 2009. The options will, however, vest in the individual at an earlier date if there is a change in ownership or control of the corporation. On January 16, 2008, a change in the ownership of the corporation occurs and the options become vested in the individual. On January 16, 2008, the options have an ascertainable fair market value of $600,000.

(ii) The payment of the options to purchase 30,000 shares was contingent only on performance of services for the corporation until January 15, 2009, and is attributable, in part, to the performance of services before the change in ownership or control. Therefore, only a portion of the payment is treated as contingent on the change. The portion of the payment that is treated as contingent on the change is the amount by which the accelerated payment on January 16, 2008 ($600,000) exceeds the present value on January 16, 2008, of the payment that was expected to have been made on January 15, 2009, absent the acceleration, plus an amount reflecting the lapse of the obligation to continue to perform services. At the time of the change, it cannot be reasonably ascertained what the value of the options would have been on January 15, 2009. The acceleration of vesting in the options is treated as significantly increasing the value of the payment. Therefore, the value of such options on January 15, 2009, is deemed to be $600,000, the amount of the accelerated payment. The present value on January 16, 2008 of a $600,000 payment to be made on January 15, 2009, is $549,964.13. Thus, the portion of the payment treated as contingent on the change is $116,035.87, the sum of $50,035.87 ($600,000 − $549,964.13), plus an amount reflecting the lapse of the obligation to continue to perform services which is $66,000 (1% × 11 months × $600,000).

Example 6. (i) The facts are the same as in Example 5, except that the options become vested periodically (absent a change in ownership of control), with one-third of the options vesting on January 15, 2007, 2008, and 2009, respectively. Thus, options to purchase 20,000 shares vest independently of the January 16, 2008, change in ownership and the options to purchase the remaining 10,000 shares vest as a result of the change.

(ii) The payment of the options to purchase 10,000 shares was contingent only on performance of services for the corporation until January 15, 2009, and is attributable, in part, to the performance of services before the change in ownership or control. Therefore, only a portion of the payment is treated as contingent on the change. The portion of the payment that is treated as contingent on the change is the amount by which the accelerated payment on January 16, 2008 ($200,000) exceeds the present value on January 16, 2008, of the payment that was expected to have been made on January 15, 2009, absent the acceleration, plus an amount reflecting the lapse of the obligation to perform services. At the time of the change, it cannot be reasonably ascertained what the value of the options would have been on January 15, 2009. The acceleration of vesting in the options is treated as significantly increasing the value of the payment. Therefore, the value of such options on January 15, 2009, is deemed to be $200,000, the amount of the accelerated payment. The present value on January 16, 2008, of a $200,000 payment to be made on January 15, 2009, is $183,328.38. Thus, the portion of the payment treated as contingent on the change is $38,671.62, the sum of $16,671.62 ($200,000 − $183,328.38), plus an amount reflecting the lapse of the obligation to continue to perform services which is $22,000 (1% × 11 months × $200,000).

Example 7. Assume the same facts as in *Example 5*, except that the option agreement provides that the options will vest either on the corporation's level of profits reaching a specified level, or if earlier, on the date on which there is a change in ownership or control of the corporation. The corporation's level of profits do not reach the specified level prior to January 16, 2008. In such case, the full amount of the payment, $600,000, is treated as contingent on the change because it was not contingent only on performance of services for the corporation for a specified period. See Q/A–39 of this section for rules relating to the reduction of the excess parachute payment by the portion of the payment which is established to be reasonable compensation for personal services actually rendered before the date of a change in ownership or control.

Example 8. On January 1, 2002, E, a disqualified individual with respect to Corporation X, enters into an employment agreement with Corporation X under which E will be paid wages of $200,000 each year during the 5-year employment agreement. The employment agreement provides that if a change in ownership or control of Corporation X occurs, E will be paid the present value of the remaining salary under the employment agreement. On January 1, 2003, a change in ownership or control of Corporation X occurs, E is terminated, and E receives a payment of the present value of $200,000 for each of the 4 years remaining under the employment agreement. Because the payment represents future salary under an employment agreement (i.e., amounts otherwise attributable to the performance of services for periods that begin after the termination of employment), the general rule of paragraph (a) of this A–24 applies to the payment. See Q/A–42(c) and 44 of this section for the treatment of the remaining payments under an employment agreement.

Presumption That Payment Is Contingent on Change

Q–25: Is there a presumption that certain payments are contingent on a change in ownership or control?

A–25: Yes, for purposes of this section, any payment is presumed to be contingent on such change unless the contrary is established by clear and convincing evidence if the payment is made pursuant to—

(a) An agreement entered into within one year before the date of a change in ownership or control; or

(b) An amendment that modifies a previous agreement in any significant respect, if the amendment is made within one year before the date of a change in ownership or control. In the case of an amendment described in paragraph (b) of this A–25, only the portion of any payment that exceeds the amount of such payment that would have been made in the absence of the amendment is presumed, by reason of the amendment, to be contingent on the change in ownership or control.

Q–26: How may the presumption described in Q/A–25 of this section be rebutted?

A–26: (a) To rebut the presumption described in Q/A–25 of this section, the taxpayer must establish by clear and convincing evidence that the payment is not contingent on the change in ownership or control. Whether the payment is contingent on such change is determined on the basis of all the facts and circumstances of the particular case. Factors relevant to such a determination include, but are not limited to, the content of the agreement or amendment and the circumstances surrounding the execution of the agreement or amendment, such as whether it was entered into at a time when a takeover attempt had commenced and the degree of likelihood that a change in ownership or control would actually occur. However, even if the presumption is rebutted with respect to an agreement, some or all of the payments under the agreement may still be contingent on the change in ownership or control pursuant to Q/A–22 of this section.

(b) In the case of an agreement described in paragraph (a) of Q/A–25 of this section, clear and convincing evidence that the agreement is one of the three following types will generally rebut the presumption that payments under the agreement are contingent on the change in ownership or control—

(1) A *nondiscriminatory employee plan or program* as defined in paragraph (c) of this A–26;

(2) A contract between a corporation and an individual that replaces a prior

contract entered into by the same parties more than one year before the change in ownership or control, if the new contract does not provide for increased payments (apart from normal increases attributable to increased responsibilities or cost of living adjustments), accelerate the payment of amounts due at a future time, or modify (to the individual's benefit) the terms or conditions under which payments will be made; or

(3) A contract between a corporation and an individual who did not perform services for the corporation prior to the one year period before the change in ownership or control occurs, if the contract does not provide for payments that are significantly different in amount, timing, terms, or conditions from those provided under contracts entered into by the corporation (other than contracts that themselves were entered into within one year before the change in ownership or control and in contemplation of the change) with individuals performing comparable services.

(c) For purposes of this section, the term *nondiscriminatory employee plan or program* means: a group term life insurance plan that meets the requirements of section 79(d); a self insured medical reimbursement plan that meets the requirements of section 105(h); a cafeteria plan (within the meaning of section 125); an educational assistance program (within the meaning of section 127); a dependent care assistance program (within the meaning of section 129); or a no-additional-cost service (within the meaning of section 132(b)) or qualified employee discount (within the meaning of section 132(c)); and an adoption assistance program (within the meaning of section 137). Payments under certain other plans are exempt from the definition of *parachute payment* under Q/A–8 of this section.

(d) The following examples illustrate the application of the presumption:

Example 1. A corporation and a disqualified individual who is an employee of the corporation enter into an employment contract. The contract replaces a prior contract entered into by the same parties more than one year before the change and the new contract does not provide for any increased payments other than a cost of living adjustment, does not accelerate the payment of amounts due at a future time, and does not modify (to the individual's benefit) the terms or conditions under which payments will be made. Clear and convincing evidence of these facts rebuts the presumption described in A–25 of this section. However, payments under the contract still may be contingent on the change in ownership or control pursuant to Q/A–22 of this section.

Example 2. Assume the same facts as in *Example 1*, except that the contract is entered into after a tender offer for the corporation's stock had commenced and it was likely that a change in ownership would occur and the contract provides for a substantial bonus payment to the individual upon his signing the contract. The individual has performed services for the corporation for many years, but previous employment contracts between the corporation and the individual did not provide for a similar signing bonus. One month after the contract is entered into, a change in the ownership of the corporation occurs. All payments under the contract are presumed to be contingent on the change in ownership even though the bonus payment would have been legally required even if no change had occurred. Clear and convincing evidence of these facts rebuts the presumption described in A–25 of this section with respect to all of the payments under the contract with the exception of the bonus payment (which is treated as contingent on the change). However, payments other than the bonus under the contract still may be contingent on the change in ownership or control pursuant to Q/A–22 of this section.

Example 3. A corporation and a disqualified individual, who is an employee of the corporation, enter into an employment contract within one year of a change in ownership of the corporation. Under the contract, in the event of a change in ownership or control and subsequent termination of employment, certain payments will be made to the individual. A change in ownership occurs, but the individual is not terminated until 2 years after the change. If clear and convincing evidence does not rebut the presumption described in A–25 of this section, because the payment is made pursuant to an agreement entered into within one year of the date of the change in ownership, the payment is presumed contingent on the change under A–25 of this section. This is true even though A's termination of employment is presumed not to be materially related to the change in ownership or control under Q/A–22 of this section.

Change in Ownership or Control

Q–27: When does a change in the ownership of a corporation occur?

A–27: (a) For purposes of this section, a change in the ownership or control of a corporation occurs on the date that any one person, or more than one person acting as a group, acquires ownership of stock of the corporation that, together with stock held by such person or group, owns more than 50 percent of the total fair market value or total voting power of the stock of such corporation. However, if any one person, or more than one person acting as a group, is considered to own more than 50 percent of the total fair market value or total voting power of the stock of a corporation, the acquisition of additional stock by the same person or persons is not considered to cause a change in the ownership of the corporation (or to cause a change in the effective control of the corporation (within the meaning of Q/A–28 of this section)). An increase in the percentage of stock owned by any one person, or persons acting as a group, as a result of a transaction in which the corporation acquires its stock in exchange for property will be treated as an acquisition of stock for purposes of this section.

(b) For purposes of paragraph (a) of this A–27, persons will not be considered to be acting as a group merely because they happen to purchase or own stock of the same corporation at the same time, or as a result of the same public offering. However, persons will be considered to be acting as a group if they are owners of an entity that enters into a merger, consolidation, purchase or acquisition of stock, or similar business transaction with the corporation. If a person, including an entity shareholder, owns stock in both entities that enter into a merger, consolidation, purchase or acquisition of stock, or similar transaction, such shareholder is considered to be acting as a group with other shareholders in an entity only to the extent of his ownership in that entity prior to the transaction giving rise to the change and not with respect to his ownership interest in the other entity.

(c) For purposes of this A–27, section 318(a) applies to determine stock ownership.

(d) The following examples illustrate the principles of this A–27:

Example 1. Corporation M has owned stock with a fair market value equal to 19 percent of the value of the stock of Corporation N (an otherwise unrelated corporation) for many years prior to 2006. Corporation M acquires additional stock with a fair market value equal to 15 percent of the value of the stock of Corporation N on January 1, 2006, and an additional 18 percent on February 21, 2007. As of February 21, 2007, Corporation M has acquired stock with a fair market value greater than 50 percent of the value of the stock of Corporation N. Thus, a change in the ownership of Corporation N is considered to occur on February 21, 2007 (assuming that Corporation M did not have effective control of Corporation N immediately prior to the acquisition on that date).

Example 2. All of the corporation's stock is owned by the founders of the corporation. The board of directors of the corporation decides to offer shares of the corporation to the public. After the public offering, the founders of the corporation own a total of 40 percent of the corporation's stock, and members of the public own 60 percent. If no one person (or more than one person acting as a group) owns more than 50 percent of the corporation's stock (by value or voting power) after the public offering, there is no change in the ownership of the corporation.

Example 3. Corporation P merges into Corporation O (a previously unrelated corporation). In the merger, the shareholders of Corporation P receive Corporation O stock in exchange for their Corporation P stock. Immediately after the merger, the former shareholders of Corporation P own stock with a fair market value equal to 60 percent of the value of the stock of Corporation O, and the former shareholders of Corporation O own stock with a fair market value equal to 40 percent of the value of the stock of Corporation O. The former shareholders of Corporation P will be treated as acting as a group in their acquisition of Corporation O stock. Thus, a change in the ownership of Corporation O occurs on the date of the merger.

Example 4. Assume the same facts as in *Example 3* except that immediately after the change, the former shareholders of Corporation P own stock with a fair market value of 51 percent of the value of Corporation O stock and the former shareholders of Corporation O own stock with a fair market value equal to 49 percent of the value of Corporation O stock. Assume further that prior to the merger several Corporation P shareholders also owned Corporation O stock (overlapping shareholders) with a fair market value of 5 percent of the value of Corporation O stock. The overlapping shareholders consist of Mutual Company A Growth Fund, which prior to the transaction owns 3 percent of the value of Corporation O stock, Mutual Company A Income Fund, which prior to the transaction owns 1 percent of the value of Corporation O stock, and B, an individual who prior to the transaction owns 1 percent of the value of Corporation O stock. Growth Fund and Income Fund are treated as separate shareholders with respect to their ownership interests in Corporation O and Corporation P. The overlapping shareholders are not treated as acting as a group with the Corporation P shareholders with respect to the Corporation O stock each overlapping shareholder held before the transaction. Instead, the overlapping shareholders are treated as acting as a group separately with respect to Corporation O and Corporation P. Because the former shareholders of Corporation O are treated as acting as a group with respect to other Corporation O shareholders only to the extent of their ownership interest in Corporation O and not with respect to their ownership interest in Corporation P, a change in the ownership of Corporation O occurs on the date of the merger.

Example 5. A, an individual, owns stock with a fair market value equal to 20 percent of the value of the stock of Corporation Q. On January 1, 2007, Corporation Q acquires in a redemption for cash all of the stock held by shareholders other than A. Thus, A is left as the sole shareholder of Corporation O. A change in ownership of Corporation O is considered to occur on January 1, 2007 (assuming that A did not have effective control of Corporation Q immediately prior to the redemption).

Example 6. Assume the same facts as in *Example 5,* except that A owns stock with a fair market value equal to 51 percent of the value of all the stock of Corporation Q immediately prior to the redemption. There is no change in the ownership of Corporation Q as a result of the redemption.

Q–28: When does a change in the effective control of a corporation occur?

A–28: (a) For purposes of this section, a change in the effective control of a corporation is presumed to occur on the date that either—

(1) Any one person, or more than one person acting as a group, acquires (or has acquired during the 12-month period ending on the date of the most recent acquisition by such person or persons) ownership of stock of the corporation possessing 20 percent or more of the total voting power of the stock of such corporation; or

(2) A majority of members of the corporation's board of directors is replaced during any 12-month period by directors whose appointment or election is not endorsed by a majority of the members of the corporation's board of directors prior to the date of the appointment or election.

(b) The presumption of paragraph (a) of this A–28 may be rebutted by establishing that such acquisition or acquisitions of the corporation's stock, or such replacement of the majority of the members of the corporation's board of directors, does not transfer the power to control (directly or indirectly) the management and policies of the corporation from any one person (or more than one person acting as a group) to another person (or group). For purposes of this section, in the absence of an event described in paragraph (a)(1) or (2) of this A–28, a change in the effective control of a corporation is presumed not to have occurred.

(c) If any one person, or more than one person acting as a group, is considered to effectively control a corporation (within the meaning of this A–28), the acquisition of additional control of the corporation by the same person or persons is not considered to cause a change in the effective control of the corporation (or to cause a change in the ownership of the corporation within the meaning of Q/A–27 of this section).

(d) For purposes of this A–28, persons will not be considered to be acting as a group merely because they happen to purchase or own stock of the same corporation at the same time, or as a result of the same public offering. However, persons will be considered to be acting as a group if they are owners of an entity that enters into a merger, consolidation, purchase or acquisition of stock, or similar business transaction with the corporation. If a person, including an entity shareholder, owns stock in both entities that enter into a merger, consolidation, purchase or acquisition of stock, or similar transaction, such shareholder is considered to be acting as a group with other shareholders in an entity only to the extent of his ownership in that entity prior to the transaction giving rise to the change and not with respect to his ownership interest in the other entity.

(e) Section 318(a) applies to determine stock ownership for purposes of this A–28.

(f) The following examples illustrate the principles of this A–28:

Example 1. Shareholder A acquired the following percentages of the voting stock of Corporation M (an otherwise unrelated corporation) on the following dates: 16 percent on January 1, 2005; 10 percent on January 10, 2006; 8 percent on February 10, 2006; 11 percent on March 1, 2007; and 8 percent on March 10, 2007. Thus, on March 10, 2007, A owns a total of 53 percent of M's voting stock. Because A did not acquire 20 percent or more of M's voting stock during any 12-month period, there is no presumption of a change in effective control pursuant to paragraph (a)(1) of this A–28. In addition, under these facts there is a presumption that no change in the effective control of Corporation M occurred. If this presumption is not rebutted (and thus no change in effective control of Corporation M is treated as occurring prior to March 10, 2007), a change in the ownership of Corporation M is treated as having occurred on March 10, 2007 (pursuant to Q/A–27 of this section) because A had acquired more than 50 percent of Corporation M's voting stock as of that date.

Example 2. A minority group of shareholders of a corporation opposes the practices and policies of the corporation's current board of directors. A proxy contest ensues. The minority group presents its own slate of candidates for the board at the next annual meeting of the corporation's shareholders, and candidates of the minority group are elected to replace a majority of the current members of the board. A change in the effective control of the corporation is presumed to have occurred on the date the election of the new board of directors becomes effective.

Q–29: When does a change in the ownership of a substantial portion of a corporation's assets occur?

A–29: (a) For purposes of this section, a change in the ownership of a substantial portion of a corporation's assets occurs on the date that any one person, or more than one person acting as a group, acquires (or has acquired during the 12-month period ending on the date of the most recent acquisition by such person or persons) assets from the corporation that have a total gross fair market value equal to or more than one third of the total gross fair market value of all of the assets of the

corporation immediately prior to such acquisition or acquisitions.

(b) A transfer of assets by a corporation is not treated as a change in the ownership of such assets if the assets are transferred to—

(1) A shareholder of the corporation (immediately before the asset transfer) in exchange for or with respect to its stock;

(2) An entity, 50 percent or more of the total value or voting power of which is owned, directly or indirectly, by the corporation;

(3) A person, or more than one person acting as a group, that owns, directly or indirectly, 50 percent or more of the total value or voting power of all the outstanding stock of the corporation; or

(4) An entity, at least 50 percent of the total value or voting power is owned, directly or indirectly, by a person described in paragraph (b)(3) of this A–29.

(c) For purposes of paragraph (b) and except as otherwise provided, a person's status is determined immediately after the transfer of the assets. For example, a transfer of assets pursuant to a complete liquidation of a corporation, a redemption of a shareholder's interest, or a transfer to a majority-owned subsidiary of the corporation is not treated as a change in the ownership of the assets of the transferor corporation.

(d) For purposes of this A–29, persons will not be considered to be acting as a group merely because they happen to purchase or own stock of the same corporation at the same time, or as a result of the same public offering. However, persons will be considered to be acting as a group if they are owners of an entity that enters into a merger, consolidation, purchase or acquisition of stock, or similar business transaction with the corporation. If a person, including an entity shareholder, owns stock in both entities that enter into a merger, consolidation, purchase or acquisition of stock, or similar transaction, such shareholder is considered to be acting as a group with other shareholders in an entity only to the extent of his ownership in that entity prior to the transaction giving rise to the change and not with respect to his ownership interest in the other entity.

(e) For purposes of this A–29, section 318(a) applies in determining stock ownership.

(f) The following examples illustrate the principles of this A–29:

Example 1. Corporation M acquires assets having a gross fair market value of $500,000 from Corporation N (an unrelated corporation) on January 1, 2006. The total gross fair market value of Corporation N's assets immediately prior to the acquisition was $3 million. Since the value of the assets acquired by Corporation M is less than one-third of the fair market value of Corporation N's total assets immediately prior to the acquisition, the acquisition does not represent a change in the ownership of a substantial portion of Corporation N's assets.

Example 2. Assume the same facts as in *Example 1.* Also assume that on November 1, 2006, Corporation M acquires from Corporation N additional assets having a fair market value of $700,000. Thus, Corporation M has acquired from Corporation N assets worth a total of $1.2 million during the 12-month period ending on November 1, 2006. Since $1.2 million is more than one-third of the total gross fair market value of all of Corporation N's assets immediately prior to the earlier of these acquisitions ($3 million), a change in the ownership of a substantial portion of Corporation N's assets is considered to have occurred on November 1, 2006.

Example 3. All of the assets of Corporation P are transferred to Corporation O (an unrelated corporation). In exchange, the shareholders of Corporation P receive Corporation O stock. Immediately after the transfer, the former shareholders of Corporation P own 60 percent of the fair market value of the outstanding stock of Corporation O and the former shareholders of Corporation O own 40 percent of the fair market value of the outstanding stock of Corporation O. Because Corporation O is an entity more than 50 percent of the fair market value of the outstanding stock of which is owned by the former shareholders of Corporation P (based on ownership of Corporation P prior the change), the transfer of assets is not treated as a change in ownership of a substantial portion of the assets of Corporation P. However, a change in the ownership (within the meaning of Q/A–27) of Corporation O occurs.

Three-Times-Base-Amount Test for Parachute Payments

Q–30: Are all payments that are in the nature of compensation, are made to a disqualified individual, and are contingent on a change in ownership or control, parachute payments?

A–30: (a) No, to determine whether such payments are parachute payments, they must be tested against the individual's *base amount* (as defined in Q/A–34 of this section). To do this, the aggregate present value of all payments in the nature of compensation that are made or to be made to (or for the benefit of) the same disqualified individual and are contingent on the change in ownership or control must be determined. If this aggregate present value equals or exceeds the amount equal to 3 times the individual's base amount, the payments are parachute payments. If this aggregate present value is less than the amount equal to 3 times the individual's base amount, no portion of the payment is a parachute payment. See Q/A–31, Q/A–32, and Q/A–33 of this section for rules on determining present value. Parachute payments that are securities violation parachute payments are not included in the foregoing computation if they are not contingent on a change in ownership or control. See Q/A–37 of this section for the definition and treatment of securities violation parachute payments.

(b) The following examples illustrate the principles of this A–30:

Example 1. A is a disqualified individual with respect to Corporation M. A's base amount is $100,000. Payments in the nature of compensation that are contingent on a change in the ownership of Corporation M totaling $400,000 are made to A on the date of the change. The payments are parachute payments since they have an aggregate present value at least equal to 3 times A's base amount of $100,000 ($3 \times \$100,000 = \$300,000$).

Example 2. Assume the same facts as in *Example 1,* except that the payments contingent on the change in the ownership of Corporation M total $290,000. Since the payments do not have an aggregate present value at least equal to 3 times A's base amount, no portion of the payments is a parachute payment.

Q–31: As of what date is the present value of a payment determined?

A–31: (a) Except as provided in this section, the present value of a payment is determined as of the date on which the change in ownership or control occurs, or, if a payment is made prior to such date, the date on which the payment is made.

(b)(1) For purposes of determining whether a payment is a parachute payment, if a payment in the nature of compensation is the right to receive payments in a year (or years) subsequent to the year of the change in ownership or control, the value of the payment is the present value of such payment (or payments) calculated in accordance with Q/A–32 of this section and based on reasonable actuarial assumptions.

(2) If the payment in the nature of compensation is an obligation to provide health care, then for purposes of this A–31 and for applying the 3-times-base-amount test under Q/A–30 of this section, the present value of such obligation should be calculated in accordance with generally accepted accounting principles. For purposes of Q/A–30 and this A–31, the obligation to provide health care is permitted to be measured by projecting the cost of premiums for purchased health care insurance, even if no health care insurance is actually purchased. If the obligation to provide health care is made in coordination with a health care plan that the corporation makes available to a group, then the premiums

used for this purpose may be group premiums.

Q–32: What discount rate is to be used to determine present value?

A–32: For purposes of this section, present value generally is determined by using a discount rate equal to 120 percent of the applicable Federal rate (determined under section 1274(d) and the regulations thereunder) compounded semiannually. The applicable Federal rate to be used for this purpose is the Federal rate that is in effect on the date as of which the present value is determined. See Q/A–24 and 35 of this section. However, for any payment, the corporation and the disqualified individual may elect to use the applicable Federal rate that is in effect on the date that the contract which provides for the payment is entered into, if such election is made in the contract.

Q–33: If the present value of a payment to be made in the future is contingent on an uncertain future event or condition, how is the present value of the payment determined?

A–33: (a) In certain cases, it may be necessary to apply the 3-times-base-amount test of Q/A–30 of this section or to allocate a portion of the base amount to a payment described in paragraphs (a)(1), (2), and (3) of Q/A–2 of this section at a time when the aggregate present value of all such payments cannot be determined with certainty because the time, amount, or right to receive one or more such payments is contingent on the occurrence of an uncertain future event or condition. For example, a disqualified individual's right to receive a payment may be contingent on the involuntary termination of such individual's employment with the corporation. In such a case, it must be reasonably estimated whether the payment will be made. If it is reasonably estimated that there is a 50-percent or greater probability that the payment will be made, the full amount of the payment is considered for purposes of the 3-times-base-amount test and the allocation of the base amount. Conversely, if it is reasonably estimated that there is a less than 50-percent probability that the payment will be made, the payment is not considered for either purpose.

(b) If the estimate made under paragraph (a) of this A–33 is later determined to be incorrect, the 3-times-base-amount test described in Q/A–30 of this section must be reapplied (and the portion of the base amount allocated to previous payments must be reallocated (if necessary) to such payments) to reflect the actual time and amount of the payment. Whenever the 3-times-base-amount test is applied (or whenever the base amount is allocated), the aggregate present value of the payments received or to be received by the disqualified individual is redetermined as of the date described in A–31 of this section, using the discount rate described in A–32 of this section. This redetermination may affect the amount of any excess parachute payment for a prior taxable year. Alternatively, if, based on the application of the 3-times-base-amount test without regard to the payment described in paragraph (a) of this A–33, a disqualified individual is determined to have an excess parachute payment or payments, then the 3-times-base-amount test does not have to be reapplied when a payment described in paragraph (a) of this A–33 is made (or becomes certain to be made) if no base amount is allocated to such payment.

(c) The following examples illustrate the principles of this A–33:

Example 1. A, a disqualified individual with respect to Corporation M, has a base amount of $100,000. Under A's employment agreement with Corporation M, A is entitled to receive a payment in the nature of compensation in the amount of $250,000 contingent on a change in ownership or control of Corporation M. In addition, the agreement provides that if A's employment is terminated within 1 year after the change in ownership or control, A will receive an additional payment in the nature of compensation in the amount of $150,000, payable 1 year after the date of the change in ownership or control. A change in ownership or control of Corporation M occurs and A receives the first payment of $250,000. Corporation M reasonably estimates that there is a 50-percent probability that, as a result of the change, A's employment will be terminated within 1 year of the date of the change. For purposes of applying the 3-times-base-amount test (and if the first payment is determined to be a parachute payment, for purposes of allocating a portion of A's base amount to that payment), because M reasonably estimates that there is a 50-percent or greater probability that, as a result of the change, A's employment will be terminated within 1 year of the date of the change, Corporation M must assume that the $150,000 payment will be made to A as a result of the change in ownership or control. The present value of the additional payment is determined under Q/A–31 and Q/A–32 of this section.

Example 2. Assume the same facts as in *Example 1* except that Corporation M reasonably estimates that there is a less than 50-percent probability that, as a result of the change, A's employment will be terminated within 1 year of the date of the change. For purposes of applying the 3-times-base-amount test, because Corporation M reasonably estimates that there is a less than 50-percent probability that, as a result of the change, A's employment will be terminated within 1 year of the date of the change, Corporation M must assume that the $150,000 payment will not be made to A as a result of the change in ownership or control.

Example 3. B, a disqualified individual with respect to Corporation P, has a base amount of $200,000. Under B's employment agreement with Corporation P, if there is a change in ownership or control of Corporation P, B will receive a severance payment of $600,000 and a bonus payment of $400,000. In addition, the agreement provides that if B's employment is terminated within 1 year after the change, B will receive an additional payment in the nature of compensation of $500,000. A change in ownership or control of Corporation P occurs, and B receives the $600,000 and $400,000 payments. At the time of the change in ownership or control, Corporation P reasonably estimates that there is a less than 50-percent probability that B's employment will be terminated within 1 year of the change. For purposes of applying the 3-times-base-amount test, because Corporation P reasonably estimates that there is a less than 50-percent probability that B's employment will be terminated within 1 year of the date of the change, Corporation P assumes that the $500,000 payment will not be made to B. Eleven months after the change in ownership or control, B's employment is terminated, and the $500,000 payment is made to B. Because B was determined to have excess parachute payments without regard to the $500,000 payment, the 3-times-base-amount test is not reapplied and the base amount is not reallocated to include the $500,000 payment. The entire $500,000 payment is treated as an excess parachute payment.

Q–34: What is the base amount?

A–34: (a) The base amount of a disqualified individual is the average annual compensation for services performed for the corporation with respect to which the change in ownership or control occurs (or for a predecessor entity or a related entity) which was includible in the gross income of such individual for taxable years in the base period (including amounts that were excluded under section 911), or which would have been includible in such gross income if such person had been a United States citizen or resident. See Q/A–35 of this section for the definition of base period and for examples of base amount computations.

(b) If the base period of a disqualified individual includes a short taxable year or less than all of a taxable year, compensation for such short or incomplete taxable year must be annualized before determining the average annual compensation for the base period. In annualizing compensation, the frequency with which payments are expected to be made over an annual period must be taken into account. Thus, any amount of compensation for such a short or

incomplete taxable year that represents a payment that will not be made more often than once per year is not annualized.

(c) Because the base amount includes only compensation that is includible in gross income, the base amount does not include certain items that constitute parachute payments. For example, payments in the form of excludible fringe benefits are not included in the base amount but may be treated as parachute payments.

(d) The base amount includes the amount of compensation included in income under section 83(b) during the base period.

(e) The following example illustrates the principles of this A–34:

Example. A disqualified individual, D, receives an annual salary of $500,000 per year during the 5-year base period. D defers $100,000 of D's salary each year under the corporation's nonqualified deferred compensation plan. D's base amount is $400,000 ($400,000 × (5/5)).

Q–35: What is the base period?

A–35: (a) The base period of a disqualified individual is the most recent 5 taxable years of the individual ending before the date of the change in ownership or control. For this purpose, the date of the change in ownership or control is the date the corporation experiences one of the events described in Q/A–27, Q/A–28, or Q/A–29 of this section. However, if the disqualified individual was not an employee or independent contractor of the corporation with respect to which the change in ownership or control occurs (or a predecessor entity or a related entity as defined in Q/A–21 of this section) for this entire 5-year period, the individual's base period is the portion of such 5-year period during which the individual performed personal services for the corporation or predecessor entity or related entity.

(b) The following examples illustrate the principles of Q/A–34 of this section and this Q/A–35:

Example 1. A disqualified individual, D, was employed by a corporation for 2 years and 4 months preceding the taxable year in which a change in ownership or control of the corporation occurs. D's includible compensation income from the corporation was $30,000 for the 4-month period, $120,000 for the first full year, and $150,000 for the second full year. D's base amount is $120,000, (($3 × $30,000) + $120,000 + $150,000)/ 3.

Example 2. Assume the same facts as in *Example 1,* except that D also received a $60,000 signing bonus when D's employment with the corporation commenced at the beginning of the 4-month period. D's base amount is $140,000, (($60,000 + (3 × $30,000)) + $120,000 + $150,000) / 3. Since the bonus will not be paid more often than once per year, the amount of the bonus is not increased in annualizing D's compensation for the 4-month period.

Q–36: How is the base amount determined in the case of a disqualified individual who did not perform services for the corporation (or a predecessor entity or a related entity as defined in Q/A–21 of this section), prior to the individual's taxable year in which the change in ownership or control occurs?

A–36: (a) In such a case, the individual's base amount is the annualized compensation for services performed for the corporation (or a predecessor entity or related entity) which—

(1) Was includible in the individual's gross income for that portion, prior to such change, of the individual's taxable year in which the change occurred (including amounts that were excluded under section 911), or would have been includible in such gross income if such person had been a United States citizen or resident;

(2) Was not contingent on the change in ownership or control; and

(3) Was not a securities violation parachute payment.

(b) The following examples illustrate the principles of this A–36:

Example 1. On January 1, 2006, A, an individual whose taxable year is the calendar year, enters into a 4-year employment contract with Corporation M as an officer of the corporation. A has not previously performed services for Corporation M (or any predecessor entity or related entity as defined in Q/A–21 of this section). Under the employment contract, A is to receive an annual salary of $120,000 for each of the 4 years that he remains employed by Corporation M with any remaining unpaid balance to be paid immediately in the event that A's employment is terminated without cause. On July 1, 2006, after A has received compensation of $60,000, a change in the ownership of Corporation M occurs. Because of the change, A's employment is terminated without cause, and he receives a payment of $420,000. It is established by clear and convincing evidence that the $60,000 in compensation is not contingent on the change in ownership or control, but the presumption that the $420,000 payment is contingent on the change is not rebutted. Thus, the payment of $420,000 is treated as contingent on the change in ownership of Corporation M. In this case, A's base amount is $120,000 (2 × $60,000). Since the present value of the payment which is contingent on the change in ownership of Corporation M ($420,000) is more than 3 times A's base amount of $120,000 (3 × $120,000 = $360,000), the payment is a parachute payment.

Example 2. Assume the same facts as in *Example 1,* except that A also receives a signing bonus of $50,000 from Corporation M on January 1, 2006. It is established by clear and convincing evidence that the bonus is not contingent on the change in ownership. When the change in ownership occurs on July 1, 2006, A has received compensation of $110,000 (the $50,000 bonus plus $60,000 in salary). In this case, A's base amount is $170,000 [$50,000 + (2 × $60,000)]. Since the $50,000 bonus will not be paid more than once per year, the amount of the bonus is not increased in annualizing A's compensation. The present value of the potential parachute payment ($420,000) is less than 3 times A's base amount of $170,000 (3 × $170,000 = $510,000), and therefore no portion of the payment is a parachute payment.

Securities Violation Parachute Payments

Q–37: Must a payment be contingent on a change in ownership or control in order to be a parachute payment?

A–37: (a) No, the term *parachute payment* also includes any payment (other than a payment exempted under Q/A–6 or Q/A–8 of this section) that is in the nature of compensation and is to (or for the benefit of) a disqualified individual, if such payment is a securities violation payment. A securities violation payment is a payment made or to be made—

(1) Pursuant to an agreement that violates any generally enforced Federal or State securities laws or regulations; and

(2) In connection with a potential or actual change in ownership or control.

(b) A violation is not taken into account under paragraph (a)(1) of this A–37 if it is merely technical in character or is not materially prejudicial to shareholders or potential shareholders. Moreover, a violation will be presumed not to exist unless the existence of the violation has been determined or admitted in a civil or criminal action (or an administrative action by a regulatory body charged with enforcing the particular securities law or regulation) which has been resolved by adjudication or consent. Parachute payments described in this A–37 are referred to in this section as securities violation payments.

(c) Securities violation parachute payments that are not contingent on a change in ownership or control within the meaning of Q/A–22 of this section are not taken into account in applying the 3-times-base-amount test of Q/A–30 of this section. Such payments are considered parachute payments regardless of whether such test is met with respect to the disqualified individual (and are included in allocating base amount under Q/A–38 of this section). Moreover, the amount of a securities violation parachute payment treated as an excess parachute payment shall not be reduced by the portion of

such payment that is reasonable compensation for personal services actually rendered before the date of a change in ownership or control if such payment is not contingent on such change. Likewise, the amount of a securities violation parachute payment includes the portion of such payment that is reasonable compensation for personal services to be rendered on or after the date of a change in ownership or control if such payment is not contingent on such change.

(d) The rules in paragraph (b) of this A–37 also apply to securities violation parachute payments that are contingent on a change in ownership or control if the application of these rules results in greater total excess parachute payments with respect to the disqualified individual than would result if the payments were treated simply as payments contingent on a change in ownership or control (and hence were taken into account in applying the 3-times-base-amount test and were reduced by, or did not include, any applicable amount of reasonable compensation).

(e) The following examples illustrate the principles of this A–37:

Example 1. A, a disqualified individual with respect to Corporation M, receives two payments in the nature of compensation that are contingent on a change in the ownership or control of Corporation M. The present value of the first payment is equal to A's base amount and is not a securities violation parachute payment. The present value of the second payment is equal to 1.5 times A's base amount and is a securities violation parachute payment. Neither payment includes any reasonable compensation. If the second payment is treated simply as a payment contingent on a change in ownership or control, the amount of A's total excess parachute payments is zero because the aggregate present value of the payments does not equal or exceed 3 times A's base amount. If the second payment is treated as a securities violation parachute payment subject to the rules of paragraph (b) of this A–37, the amount of A's total excess parachute payments is 0.5 times A's base amount. Thus, the second payment is treated as a securities violation parachute payment.

Example 2. Assume the same facts as in *Example 1,* except that the present value of the first payment is equal to 2 times A's base amount. If the second payment is treated simply as a payment contingent on a change in ownership or control, the total present value of the payments is 3.5 times A's base amount, and the amount of A's total excess parachute payments is 2.5 times A's base amount. If the second payment is treated as a securities violation parachute payment, the amount of A's total excess parachute payments is 0.5 times A's base amount. Thus, the second payment is treated simply as a payment contingent on a change in ownership or control.

Example 3. B, a disqualified individual with respect to Corporation N, receives two payments in the nature of compensation that are contingent on a change in the control of Corporation N. The present value of the first payment is equal to 4 times B's base amount and is a securities violation parachute payment. The present value of the second payment is equal to 2 times B's base amount and is not a securities violation parachute payment. B establishes by clear and convincing evidence that the entire amount of the first payment is reasonable compensation for personal services to be rendered after the change in ownership or control. If the first payment is treated simply as a payment contingent on a change in ownership or control, it is exempt from the definition of *parachute payment* pursuant to Q/A–9 of this section. Thus, the amount of B's total excess parachute payment is zero because the present value of the second payment does not equal or exceed three times B's base amount. However, if the first payment is treated as a securities violation parachute payment, the amount of B's total excess parachute payments is 3 times B's base amount. Thus, the first payment is treated as a securities violation parachute payment.

Example 4. Assume the same facts as in *Example 3,* except that B does not receive the second payment and B establishes by clear and convincing evidence that the first payment is reasonable compensation for services actually rendered before the change in the control of Corporation N. If the payment is treated simply as a payment contingent on a change in ownership or control, the amount of B's excess parachute payment is zero because the amount treated as an excess parachute payment is reduced by the amount that B establishes as reasonable compensation. However, if the payment is treated as a securities violation parachute payment, the amount of B's excess parachute payment is 3 times B's base amount. Thus, the payment is treated as a securities violation parachute payment.

Computation and Reduction of Excess Parachute Payments

Q–38: How is the amount of an excess parachute payment computed?

A–38: (a) The amount of an excess parachute payment is the excess of the amount of any parachute payment over the portion of the disqualified individual's base amount that is allocated to such payment. For this purpose, the portion of the base amount allocated to any parachute payment is the amount that bears the same ratio to the base amount as the present value of such parachute payment bears to the aggregate present value of all parachute payments made or to be made to (or for the benefit of) the same disqualified individual. Thus, the portion of the base amount allocated to any parachute payment is determined by multiplying the base amount by a fraction, the numerator of which is the present value of such parachute payment and the denominator of which is the aggregate present value of all such payments. See Q/A–31, Q/A–32, and Q/A–33 of this section for rules on determining present value and Q/A–34 of this section for the definition of *base amount.*

(b) The following example illustrates the principles of this A–38:

Example. An individual with a base amount of $100,000 is entitled to receive two parachute payments, one of $200,000 and the other of $400,000. The $200,000 payment is made at the time of the change in ownership or control, and the $400,000 payment is to be made at a future date. The present value of the $400,000 payment is $300,000 on the date of the change in ownership or control. The portions of the base amount allocated to these payments are $40,000 (($200,000/$500,000) × $100,000) and $60,000 (($300,000/$500,000) × $100,000), respectively. Thus, the amount of the first excess parachute payment is $160,000 ($200,000—$40,000) and that of the second is $340,000 ($400,000—$60,000).

Q–39: May the amount of an excess parachute payment be reduced by reasonable compensation for personal services actually rendered before the change in ownership or control?

A–39: (a) Generally, yes, except that in the case of payments treated as securities violation parachute payments or when the portion of a payment that is treated as contingent on the change in ownership or control is determined under paragraph (b) or (c) of Q/A–24 of this section, the amount of an excess parachute payment is reduced by any portion of the payment that the taxpayer establishes by clear and convincing evidence is reasonable compensation for personal services actually rendered by the disqualified individual before the date of the change in ownership or control. Services reasonably compensated for by payments that are not parachute payments (for example, because the payments are not contingent on a change in ownership or control and are not securities violation parachute payments, or because the payments are exempt from the definition of parachute payment under Q/A–6 through Q/A–9 of this section) are not taken into account for this purpose. The portion of any parachute payment that is established as reasonable compensation is first reduced by the portion of the disqualified individual's base amount that is allocated to such parachute payment; any remaining portion of the parachute payment established as reasonable compensation then reduces the excess parachute payment.

(b) The following examples illustrate the principles of this A–39:

Example 1. Assume that a parachute payment of $600,000 is made to a

disqualified individual, and the portion of the individual's base amount that is allocated to the parachute payment is $100,000. Also assume that $300,000 of the $600,000 parachute payment is established as reasonable compensation for personal services actually rendered by the disqualified individual before the date of the change in ownership or control. Before the reasonable compensation is taken into account, the amount of the excess parachute payment is $500,000 ($600,000—$100,000). In reducing the excess parachute payment by reasonable compensation, the portion of the parachute payment that is established as reasonable compensation ($300,000) is first reduced by the portion of the disqualified individual's base amount that is allocated to the parachute payment ($100,000), and the remainder ($200,000) then reduces the excess parachute payment. Thus, in this case, the excess parachute payment of $500,000 is reduced by $200,000 of reasonable compensation.

Example 2. Assume the same facts as in *Example 1,* except that the full amount of the $600,000 parachute payment is established as reasonable compensation. In this case, the excess parachute payment of $500,000 is reduced to zero by $500,000 of reasonable compensation. As a result, no portion of any deduction for the payment is disallowed by section 280G, and no portion of the payment is subject to the 20-percent excise tax of section 4999.

Determination of Reasonable Compensation

Q–40: How is it determined whether payments are reasonable compensation?

A–40: (a) In general, whether payments are reasonable compensation for personal services actually rendered, or to be rendered, by the disqualified individual is determined on the basis of all the facts and circumstances of the particular case. Factors relevant to such a determination include, but are not limited to, the following—

(1) The nature of the services rendered or to be rendered;

(2) The individual's historic compensation for performing such services; and

(3) The compensation of individuals performing comparable services in situations where the compensation is not contingent on a change in ownership or control.

(b) For purposes of section 280G, reasonable compensation for personal services includes reasonable compensation for holding oneself out as available to perform services and refraining from performing services (such as under a covenant not to compete).

Q–41: Is any particular type of evidence generally considered clear and convincing evidence of reasonable compensation for personal services?

A–41: Yes, a showing that payments are made under a nondiscriminatory employee plan or program (as defined in Q/A–26 of this section) generally is considered to be clear and convincing evidence that the payments are reasonable compensation. This is true whether the personal services for which the payments are made are actually rendered before, or to be rendered on or after, the date of the change in ownership or control. Q/A–46 of this section (relating to the treatment of an affiliated group as one corporation) does not apply for purposes of this A–41. No determination of reasonable compensation is needed for payments under qualified plans to be exempt from the definition of *parachute payment* under Q/A–8 of this section.

Q–42: Is any particular type of evidence generally considered clear and convincing evidence of reasonable compensation for personal services to be rendered on or after the date of a change in ownership or control?

A–42: (a) Yes, if payments are made or to be made to (or on behalf of) a disqualified individual for personal services to be rendered on or after the date of a change in ownership or control, a showing of the following generally is considered to be clear and convincing evidence that the payments are reasonable compensation for services to be rendered on or after the date of the change in ownership or control—

(1) The payments were made or are to be made only for the period the individual actually performs such personal services; and

(2) If the individual's duties and responsibilities are substantially the same after the change in ownership or control, the individual's annual compensation for such services is not significantly greater than such individual's annual compensation prior to the change in ownership or control, apart from normal increases attributable to increased responsibilities or cost of living adjustments. If the scope of the individual's duties and responsibilities are not substantially the same, the annual compensation after the change is not significantly greater than the annual compensation customarily paid by the employer or by comparable employers to persons performing comparable services. However, except as provided in paragraph (b) of this A–42, such clear and convincing evidence will not exist if the individual does not, in fact, perform the services contemplated in exchange for the compensation.

(b) Generally, an agreement under which the disqualified individual must refrain from performing services (such as a covenant not to compete) is an agreement for the performance of personal services for purposes of this A–42 to the extent that it is demonstrated by clear and convincing evidence that the agreement substantially constrains the individual's ability to perform services and there is a reasonable likelihood that the agreement will be enforced against the individual. In the absence of clear and convincing evidence, payments under the agreement are treated as severance payments under Q/A–44 of this section.

(c) If the employment of a disqualified individual is involuntarily terminated before the end of a contract term and the individual is paid damages for breach of contract, a showing of the following factors generally is considered clear and convincing evidence that the payment is reasonable compensation for personal services to be rendered on or after the date of change in ownership or control—

(1) The contract was not entered into, amended, or renewed in contemplation of the change in ownership or control;

(2) The compensation the individual would have received under the contract would have qualified as reasonable compensation under section 162;

(3) The damages do not exceed the present value (determined as of the date of receipt) of the compensation the individual would have received under the contract if the individual had continued to perform services for the employer until the end of the contract term;

(4) The damages are received because an offer to provide personal services was made by the disqualified individual but was rejected by the employer; and

(5) The damages are reduced by mitigation. Mitigation will be treated as occurring when such damages are reduced (or any payment of such damages is returned) to the extent of the disqualified individual's earned income (within the meaning of section 911(d)(2)(A)) during the remainder of the period in which the contract would have been in effect. See Q/A–44 of this section for rules regarding damages for a failure to make severance payments.

(c) The following examples illustrate the principles of this A–42:

Example 1. A, a disqualified individual, has a three-year employment contract with Corporation M, a publicly traded corporation. Under this contract, A is to receive a salary for $100,000 for the first year of the contract and, for each succeeding year, an annual salary that is 10 percent higher than the prior year's salary. During the third year of the contract, Corporation N acquires all the stock of Corporation M. Prior to the change in ownership, Corporation N arranges to retain A's services by entering into an employment contract with A that is essentially the same as A's contract with Corporation M. Under

the new contract, Corporation N is to fulfill Corporation M's obligations for the third year of the old contract, and, for each of the succeeding years, pay A an annual salary that is 10 percent higher than A's prior year's salary. Amounts are payable under the new contract only for the portion of the contract term during which A remains employed by Corporation N. A showing of the facts described above (and in the absence of contradictory evidence) is regarded as clear and convincing evidence that all payments under the new contract are reasonable compensation for personal services to be rendered on or after the date of the change in ownership. Therefore, the payments under this agreement are exempt from the definition of *parachute payment* pursuant to Q/A–9 of this section.

Example 2. Assume the same facts as in *Example 1* except that A does not perform the services described in the new contract, but receives payment under the new contract. Because services were not rendered after the change, the payments under this contract are not exempt from the definition of *parachute payment* pursuant to Q/A–9 of this section.

Example 3. Assume the same facts as in *Example 1* except that under the new contract A agrees to perform consulting services to Corporation N, when and if, Corporation N requires A's services. Assume further that when Corporation N does not require A's services, the contract provides that A must not perform services for any other competing company. Corporation N previously enforced similar contracts against former employees of Corporation N. Because A is substantially constrained under this contract and Corporation N is reasonably likely to enforce the contract against A, the agreement is an agreement for the performance of services under paragraph (b) of this A–42. Assuming the requirements of paragraph (a) of this A–42 are met and there is clear and convincing evidence that all payments under the new contract are reasonable compensation for personal services to be rendered on or after the date of the change in ownership, the payments under this contract are exempt from the definition of *parachute payment* pursuant to Q/A–9 of this section.

Example 4. Assume the same facts as in *Example 1,* except that the employment contract with Corporation N does not provide that amounts are payable under the contract only for the portion of the term for which A remains employed by Corporation N. Shortly after the change in ownership, and despite A's request to remain employed by Corporation N, A's employment with Corporation N is involuntarily terminated. Shortly thereafter, A obtains employment with Corporation O. A commences a civil action against Corporation N, alleging breach of the employment contract. In settlement of the litigation, A receives an amount equal to the present value of the compensation A would have received under the contract with Corporation N, reduced by the amount of compensation A otherwise receives from Corporation O during the period that the contract would have been in effect. A showing of the facts described above (and in the absence of contradictory evidence) is regarded as clear and convincing evidence that the amount A receives as damages is reasonable compensation for personal services to be rendered on or after the date of the change in ownership. Therefore, the amount received by A is exempt from the definition of *parachute payment* pursuant to Q/A–9 of this section.

Q–43: Is any particular type of payment generally considered reasonable compensation for personal services actually rendered before the date of a change in ownership or control?

A–43: (a) Yes, payments of compensation earned before the date of a change in ownership or control generally are considered reasonable compensation for personal services actually rendered before the date of a change in ownership or control if they qualify as reasonable compensation under section 162.

Q–44: May severance payments be treated as reasonable compensation?

A–44: (a) No, severance payments are not treated as reasonable compensation for personal services actually rendered before, or to be rendered on or after, the date of a change in ownership or control. Moreover, any damages paid for a failure to make severance payments are not treated as reasonable compensation for personal services actually rendered before, or to be rendered on or after, the date of such change. For purposes of this section, the term *severance payment* means any payment that is made to (or for the benefit of) a disqualified individual on account of the termination of such individual's employment prior to the end of a contract term, but does not include any payment that otherwise would be made to (or for the benefit of) such individual on the termination of such individual's employment, whenever occurring.

(b) The following example illustrates the principles of this A–44:

Example. A, a disqualified individual, has a three-year employment contract with Corporation X. Under the contract, A will receive a salary of $200,000 for the first year of the contract, and for each succeeding year, an annual salary that is $100,000 higher than the previous year. In the event of A's termination of employment following a change in ownership or control, the contract provides that A will receive the remaining salary due under the employment contract. At the beginning of the second year of the contract, Corporation Y acquires all of the stock of Corporation X, A's employment is terminated, and A receives $700,000 ($300,000 for the second year of the contract plus $400,000 for the third year of the contract) representing the remaining salary due under the employment contract. Because the $700,000 payment is treated as a severance payment, it is not reasonable compensation for personal services on or after the date of the change in ownership or control. Thus, the full amount of the $700,000 is a parachute payment.

Miscellaneous Rules

Q–45: How is the term *corporation* defined?

A–45: For purposes of this section, the term *corporation* has the meaning prescribed by section 7701(a)(3) and § 301.7701–2(b). For example, a *corporation,* for purposes of this section, includes a publicly traded partnership treated as a corporation under section 7704 (a); an entity described in § 301.7701–3(c)(1)(v)(A) of this chapter; a real estate investment trust under section 856(a); a corporation that has mutual or cooperative (rather than stock) ownership, such as a mutual insurance company, a mutual savings bank, or a cooperative bank (as defined in section 7701(a)(32)), and a foreign corporation as defined under section 7701(a)(5).

Q–46: How is an affiliated group treated?

A–46: For purposes of this section, and except as otherwise provided in this section, all members of the same affiliated group (as defined in section 1504, determined without regard to section 1504(b)) are treated as one corporation. Rules affected by this treatment of an affiliated group include (but are not limited to) rules relating to exempt payments of certain corporations (Q/A–6, Q/A–7 of this section (except as provided therein)), payor of parachute payments (Q/A–10 of this section), disqualified individuals (Q/A–15 through Q/A–21 of this section (except as provided therein)), rebuttal of the presumption that payments are contingent on a change (Q/A–26 of this section (except as provide therein)), change in ownership or control (Q/A–27, 28, and 29 of this section), and reasonable compensation (Q/A–42, 43, and 44 of this section).

Effective Date

Q–47: What is the general effective date of section 280G?

A–47: (a) Generally, section 280G applies to payments under agreements entered into or renewed after June 14, 1984. Any agreement that is entered into before June 15, 1984, and is renewed after June 14, 1984, is treated as a new contract entered into on the day the renewal takes effect.

(b) For purposes of paragraph (a) of this A–47, a contract that is terminable or cancellable unconditionally at will by either party to the contract without the consent of the other, or by both parties to the contract, is treated as a new

contract entered into on the date any such termination or cancellation, if made, would be effective. However, a contract is not treated as so terminable or cancellable if it can be terminated or cancelled only by terminating the employment relationship or independent contractor relationship of the disqualified individual.

(c) Section 280G applies to payments under a contract entered into on or before June 14, 1984, if the contract is amended or supplemented after June 14, 1984, in significant relevant respect. For this purpose, a *supplement* to a contract is defined as a new contract entered into after June 14, 1984, that affects the trigger, amount, or time of receipt of a payment under an existing contract.

(d)(1) Except as otherwise provided in paragraph (e) of this A–47, a contract is considered to be amended or supplemented in significant relevant respect if provisions for payments contingent on a change in ownership or control (parachute provisions), or provisions in the nature of parachute provisions, are added to the contract, or are amended or supplemented to provide significant additional benefits to the disqualified individual. Thus, for example, a contract generally is treated as amended or supplemented in significant relevant respect if it is amended or supplemented—

(i) To add or modify, to the disqualified individual's benefit, a change in ownership or control trigger;

(ii) To increase amounts payable that are contingent on a change in ownership or control (or, where payment is to be made under a formula, to modify the formula to the disqualified individual's advantage); or

(iii) To accelerate, in the event of a change in ownership or control, the payment of amounts otherwise payable at a later date.

(2) For purposes of paragraph (a) of this A–47, a payment is not treated as being accelerated in the event of a change in ownership or control if the acceleration does not increase the present value of the payment.

(e) A contract entered into on or before June 14, 1984, is not treated as amended or supplemented in significant relevant respect merely by reason of normal adjustments in the terms of employment relationship or independent contractor relationship of the disqualified individual. Whether an adjustment in the terms of such a relationship is considered normal for this purpose depends on all of the facts and circumstances of the particular case. Relevant factors include, but are not limited to, the following—

(1) The length of time between the adjustment and the change in ownership or control;

(2) The extent to which the corporation, at the time of the adjustment, viewed itself as a likely takeover candidate;

(3) A comparison of the adjustment with historical practices of the corporation;

(4) The extent of overlap between the group receiving the benefits of the adjustment and those members of that group who are the beneficiaries of pre-June 15, 1984, parachute contracts; and

(5) The size of the adjustment, both in absolute terms and in comparison with the benefits provided to other members of the group receiving the benefits of the adjustment.

Q–48: What is the effective date of this section?

A–48: This section applies to any payment that is contingent on a change in ownership or control that occurs on or after January 1, 2004. Taxpayers can rely on these rules for the treatment of any parachute payment made after February 20, 2002.

Robert E. Wenzel,

Deputy Commissioner of Internal Revenue.

[FR Doc. 02–3819 Filed 2–19–02; 8:45 am]

BILLING CODE 4830–01–P

DEPARTMENT OF THE TREASURY

Internal Revenue Service

26 CFR Part 1

[REG–142499–01]

RIN 1545–BA24

Catch-Up Contributions for Individuals Age 50 or Over; Hearing

AGENCY: Internal Revenue Service (IRS), Treasury.

ACTION: Change of date of public hearing; extension of time to submit written comments and outlines of oral comments.

SUMMARY: This document changes the date of the public hearing on the proposed regulations that relate to requirements for retirement plans providing catch-up contributions to individuals age 50 or older pursuant to the provisions of section 414(v) and supercedes the notice of public hearing published in the **Federal Register** on October 23, 2001. It also extends the time to submit written comments and outlines of oral comments for the hearing.

DATES: The public hearing will be held April 30, 2002, beginning at 10 a.m. Written comments and outlines of oral comments must be received by April 15, 2002.

ADDRESSES: The public hearing will be held in the Auditorium, Internal Revenue Building, 1111 Constitution Avenue, NW., Washington, DC. Send submissions to CC:ITA:RU (REG–142499–01), Room 5226, Internal Revenue Service, POB 7604, Ben Franklin Station, Washington, DC 20044. Submissions may be hand delivered Monday through Friday between the hours of 8 a.m. and 5 p.m. to CC:ITA:RU (REG–142499–01), Courier's Desk, Internal Revenue Service, 1111 Constitution Avenue, NW., Washington, DC. Alternatively, taxpayers may submit comments directly to the IRS Internet site at www.irs.gov/regs.

FOR FURTHER INFORMATION CONTACT: Concerning the proposed regulations, R. Lisa Mojiri-Azad or John Ricotta, (202) 622–6060 (not a toll-free number); concerning submissions of comments, the hearing, and/or to be placed on the building access list to attend the hearing, Donna Poindexter (202) 622–7180 (not a toll-free number).

SUPPLEMENTARY INFORMATION:

Background

A notice of proposed rulemaking and notice of public hearing that appeared in the **Federal Register** on October 23, 2001, (66 FR 53555), announced that a public hearing on the proposed regulations relating to requirements for retirement plans providing catch-up contributions to individuals age 50 or older pursuant to the provisions of section 414(v) would be held on February 21, 2002, in the IRS Auditorium, Internal Revenue Building, 1111 Constitution Avenue, NW., Washington, DC. Subsequently, the date of the public hearing has changed to April 30, 2002, at 10 a.m., in the IRS Auditorium. Written comments and outlines of oral comments must be received by April 15, 2002.

Cynthia Grigsby,

Chief, Regulations Unit, Associate Chief Counsel (Income Tax and Accounting).

[FR Doc. 02–4093 Filed 2–14–02; 3:44 pm]

BILLING CODE 4830–01–P

ENVIRONMENTAL PROTECTION AGENCY

40 CFR Part 300

[FRL–7147–3]

National Oil and Hazardous Substance Pollution Contingency Plan; National Priorities List

AGENCY: Environmental Protection Agency.

ACTION: Notice of intent to partially delete the California Gulch Superfund Site from the National Priorities List.

SUMMARY: The Environmental Protection Agency (EPA) Region 8 is issuing a notice of intent to partially delete the subunits A and B, residential waste rock piles, and parks and playgrounds within Operable Unit 9 of the California Gulch Superfund Site (Site), located in Lake County, Colorado, from the National Priorities List (NPL) and requests public comments on this notice of intent. The NPL, promulgated pursuant to section 105 of the Comprehensive Environmental Response, Compensation, and Liability Act (CERCLA) of 1980, as amended, is found at appendix B of 40 CFR part 300 which is the National Oil and Hazardous Substances Pollution Contingency Plan (NCP). The EPA and the State of Colorado, through the Colorado Department of Public Health and Environment, have determined that all appropriate response actions under CERCLA, other than operation and maintenance and five-year reviews, have been completed. However, this partial deletion does not preclude future actions under Superfund. In the ''Rules and Regulations'' Section of today's **Federal Register**, we are publishing a direct final notice of partial deletion of the California Gulch Superfund Site without prior notice of intent to partially delete because we view this as a noncontroversial revision and anticipate no adverse comment. We have explained our reasons for this partial deletion in the preamble to the direct final partial deletion. If we receive no adverse comment(s) on this notice of intent to partially delete or the direct final notice of partial deletion, we will not take further action on this notice of intent to partially delete. If we receive adverse comment(s), we will withdraw the direct final notice of partial deletion and it will not take effect. We will, as appropriate, address all public comments in a subsequent final partial deletion notice based on this notice of intent to partially delete. We will not institute a second comment period on this notice of intent to partially delete. Any parties interested in commenting must do so at this time. For additional information, see the direct final notice of partial deletion which is located in the Rules section of this **Federal Register**.

DATES: Comments concerning this Site must be received by March 22, 2002.

ADDRESSES: Written comments should be addressed to: Rebecca Thomas, Remedial Project Manager, Environmental Protection Agency, Region 8, Mail Code 8EPR–SR, 999 18th Street, Suite 300, Denver, CO 80202. *Thomas.Rebecca@epamail.epa.gov.*

FOR FURTHER INFORMATION CONTACT: Rebecca Thomas, Remedial Project Manager, Environmental Protection Agency, Region 8, Mail Code 8EPR–SR, 999 18th Street, Suite 300, Denver, CO 80202. *Thomas.Rebecca@epamail.epa.gov* (303) 312–6552 or toll free at (800) 227–8917.

SUPPLEMENTARY INFORMATION: For additional information, see the Direct final notice of partial deletion which is located in the Rules section of this **Federal Register**.

Information Repositories

Repositories have been established to provide detailed information concerning this decision at the following address:

U.S. EPA Region 8, Superfund Records Center, 999 18th Street, 5th Floor, Denver, CO 80202, (303) 312–6473 or toll free (800) 227–8917; Viewing hours: 8:00 a.m. to 4:30 p.m., Monday through Friday, excluding holidays.

Lake County Pubic Library, 1115 Harrison Avenue, Leadville, CO 80461, (719) 486–0569.

List of Subjects in 40 CFR Part 300

Environmental protection, Air pollution control, Chemicals, Hazardous waste, Hazardous substances, Intergovernmental relations, Penalties, Reporting and recordkeeping requirements, Superfund, Water pollution control, Water supply.

Authority: 33 U.S.C. 1321(c)(2); 42 U.S.C. 9601–9657; E.O. 12777, 56 FR 54757, 3 CFR, 1991 Comp., p. 351; E.O. 12580, 52 FR 2923; 3 CFR, 1987 Comp., p. 193.

Dated: January 30, 2002.

Jack W. McGraw,

Acting Regional Administrator, Region 8.

[FR Doc. 02–3920 Filed 2–19–02; 8:45 am]

BILLING CODE 6560–50–P

ENVIRONMENTAL PROTECTION AGENCY

48 CFR Parts 1509 and 1552

[FRL–7147–4]

Acquisition Regulation: Contractor Performance Evaluations

AGENCY: Environmental Protection Agency.

ACTION: Proposed rule.

SUMMARY: The Environmental Protection Agency (EPA) is proposing to amend the EPA Acquisition Regulation to revise its policy and procedures regarding the evaluation of contractor performance. This action is necessary because EPA's current regulation eliminates the use of the National Institutes of Health (NIH) Contractor Performance System to record contractor performance histories for construction acquisitions. This revision will allow EPA contracting officers to utilize the NIH system for construction type acquisition in lieu of the Federal Acquisition Regulation prescribed Standard Form 1420, Performance Evaluation (Construction Contracts). The NIH obtained approval from the Civilian Agency Acquisition Council regarding the use of its construction module in lieu of Standard Form 1420.

DATES: Comments should be submitted no later than March 22, 2002.

ADDRESSES: Submit written comments to Frances Smith at the following address: U.S. Environmental Protection Agency, Office of Acquisition Management, Mail Code 3802R, 1200 Pennsylvania Avenue, NW., Ariel Rios Building, Washington, DC 20460. Comments may be sent electronically to *Smith.Frances@epa.gov.* Electronic comments must be submitted as an ASCII file, avoiding the use of special characters and any form of encryption. Floppy disks (3½ size) may also be submitted with comments in Corel WordPerfect format or ASCII file format. Do not submit confidential business information through E-mail.

FOR FURTHER INFORMATION CONTACT: Frances Smith, U.S. Environmental Protection Agency, Office of Acquisition Management, (202) 564–4368.

SUPPLEMENTARY INFORMATION:

A. Background

This proposed rule amends the Environmental Protection Agency Acquisition Regulation Subpart 1509.170 and 1552.209–76 to allow EPA contracting officers to utilize the construction module in the National Institutes of Health's Contractor

Performance System. EPA currently uses the services module in the NIH system to evaluate contractor performances of both large and small businesses who are awarded EPA contracts in excess of $100,000. This proposed rule will allow contracting officers to use either the services module or the construction module in the NIH system, depending on the type of acquisition.

B. Executive Order 12866

This proposed rule is not a significant regulatory action for the purposes of Executive Order 12866; therefore, no review is required by the Office of Information and Regulatory Affairs within the Office of Management and Budget (OMB).

C. Paperwork Reduction Act

The Paperwork Reduction Act applies to this proposed rule, and the information collection request has been evaluated by the Office of Management and Budget. The Office of Information and Regulatory Affairs within the Office of Management and Budget has issued OMB Clearance No. 9000–0142 for the collection of contractor performance information. Comments regarding Paperwork Reduction Act concerns should be sent to the Office of Management and Budget (Attn: EPA Desk Officer).

D. Regulatory Flexibility Act (RFA), as Amended by the Small Business Regulatory Enforcement Fairness Act of 1996 (SBREFA), 5 U.S.C. 601 et seq.

The RFA generally requires an agency to prepare a regulatory flexibility analysis of any rule subject to notice and comment rulemaking requirements under the Administrative Procedure Act or any other statute unless the agency certifies that the rule will not have a significant economic impact on a substantial number of small entities. Small entities include small businesses, small organizations, and small governmental jurisdictions.

For purposes of assessing the impact of today's proposed rule on small entities, small entity is defined as: (1) A small business that meets the definition of a small business found in the Small Business Act and codified at 13 CFR 121.201; (2) a small governmental jurisdiction that is a government of a city, county, town, school district or special district with a population of less than 50,000; and (3) a small organization that is any not-for-profit enterprise which is independently owned and operated and is not dominant in its field.

After considering the economic impacts of today's proposed rule on small entities, I certify that this action will not have a significant economic impact on a substantial number of small entities. In determining whether a rule has a significant economic impact on a substantial number of small entities, the impact of concern is any significant adverse economic impact on small entities, since the primary purpose of the regulatory flexibility analyses is to identify and address regulatory alternatives ''which minimize any significant economic impact of the proposed rule on small entities.'' 5 U.S.C. 603 and 604. Thus, an agency may certify that a rule will not have a significant economic impact on a substantial number of small entities if the rule relieves regulatory burden, or otherwise has a positive economic effect on all of the small entities subject to the rule.

This proposed rule requires no reporting or record-keeping by small or large business contractors. Rather, it provides EPA contractors with a formal opportunity, generally once a year per contract, to review and comment on their specific performance evaluations as conducted by the cognizant EPA contracting officer. Therefore, this proposed rule will have no adverse or significant economic impact on small entities.

E. Unfunded Mandates Reform Act

Title II of the Unfunded Mandates Reform Act of 1995 (UMRA), Public Law 104–4, establishes requirements for Federal agencies to assess their regulatory actions on State, local, and Tribal governments, and the private sector. This proposed rule does not contain a Federal mandate that may result in expenditures of $100 million or more for State, local, and Tribal governments, in the aggregate, or the private sector in one year. Any private sector costs for this action relate to paperwork requirements and associated expenditures that are far below the level established for UMRA applicability. Thus, this proposed rule is not subject to the requirements of sections 202 and 205 of the UMRA.

F. Executive Order 13045

Executive Order 13045, Protection of Children from Environmental Health Risks and Safety Risks (62 FR 19885, April 23, 1997), applies to any rule that: (1) Is determined to be economically significant as defined under Executive Order 12866, and (2) concerns an environmental health or safety risk that EPA has reason to believe may have a disproportionate effect on children. If the regulatory action meets both criteria, the Agency must evaluate the environmental health or safety effects of the planned rule on children, and explain why the planned regulation is preferable to other potentially effective and reasonably feasible alternatives considered by the Agency.

This proposed rule is not subject to Executive Order 13045 because it is not an economically significant rule as defined by Executive Order 12866, and because it does not involve decisions on environmental health or safety risks.

G. Executive Order 13132

Executive Order 13132 entitled ''Federalism'' (64 FR 43255, August 10, 1999) requires EPA to develop an accountable process to ensure ''meaningful and timely input by State and local officials in the development of regulatory policies that have federalism implications.'' ''Policies that have federalism implications'' as defined in the Executive Order include regulations that have ''substantial direct effects on the States, on the relationship between the national government and the States, or on the distribution of power and responsibilities among the various levels of government.'' Under Section 6 of Executive Order 13132, EPA may not issue a regulation that has federalism implications, that imposes substantial direct compliance costs, and that is not required by statute, unless the Federal government provides the funds necessary to pay the direct compliance costs incurred by State and local governments, or EPA consults with State and local officials early in the process of developing the proposed regulation. EPA also may not issue a regulation that has federalism implications and that preempts State law, unless the Agency consults with State and local officials early in the process of developing the proposed regulation.

This proposed rule does not have federalism implications. It will not have substantial direct effects on the States, on the relationship between the national government and the States distribution of power and responsibilities among the various levels of government, as specified in Executive Order 13132. Thus, the requirements of section 6 of the Executive Order do not apply to this proposed rule.

H. Executive Order 13175

Executive Order 13175, entitled ''Consultation and Coordination with Indian Tribal Governments'' (65 FR 67249, November 6, 2000), requires EPA to develop an accountable process to ensure ''meaningful and timely input by

tribal officials in the development of regulatory policies that have tribal implications.'' ''Policies that have tribal implications'' is defined in the Executive Order to include regulations that have ''substantial direct effects on one or more Indian tribes, on the relationship between the Federal government and the Indian tribes, or on the distribution of power and responsibilities between the Federal government and Indian tribes.''

This proposed rule does not have tribal implications. It will not have substantial direct effects on tribal governments, on the relationship between the Federal government and Indian tribes, or on the distribution of power and responsibilities between the Federal government and Indian tribes, as specified in Executive Order 13175. Thus, Executive Order 13175 does not apply to this proposed rule.

In the spirit of Executive Order 13175, and consistent with EPA policy to promote communications between EPA and tribal governments, EPA specifically solicits additional comment on this proposed rule from tribal officials.

I. National Technology Transfer and Advancement Act of 1995

EPA will use voluntary consensus standards, as directed by section 12(d) of the National Technology Transfer and Advancement Act of 1995 (NTTAA), Public Law 104–113, section 12(d) (15 U.S.C. 272 note), in its procurement activities. The NTTAA directs EPA to use voluntary consensus standards in its regulatory activities unless to do so would be inconsistent with applicable law or otherwise impractical. Voluntary consensus standards are technical standards (e.g., materials specifications, test methods, sampling procedures, and business practices) that are developed or adopted by voluntary consensus standards bodies. The NTTAA directs EPA to provide Congress, through OMB, explanations when the Agency decides not to use available and applicable voluntary consensus standards.

This rulemaking does not involve technical standards. Therefore, EPA is not considering use of any voluntary consensus standards. EPA welcomes comments on this aspect of the interim rulemaking, and, specifically, invites the public to identify potentially applicable voluntary consensus standards and to explain why such standards should be used in this regulation.

J. Executive Order 13211 (Energy Effects)

This proposed rule is not subject to Executive Order 13211, ''Actions Concerning Regulations That Significantly Affect Energy Supply, Distribution, or Use'' (66 FR 28355 (May 22, 2001)) because it is not a significant regulatory action under Executive Order 12866.

List of Subjects in 48 CFR Parts 1509 and 1552.

Government procurement.

Therefore, 48 CFR Chapter 15 is proposed to be amended as set forth below:

1. The authority citation for Parts 1509 and 1552 is revised to read as follows:

Authority: 5 U.S.C. 301; Sec. 205(c), 63 Stat. 390, as amended, 40 U.S.C. 486(c); and 41 U.S.C. 418b.

PART 1509—[AMENDED]

2. Section 1509.170–3 is amended by revising paragraphs (a), (c), and adding paragraph (d) to read as follows:

1509.170–3 Applicability

(a) This subpart applies to all EPA acquisitions in excess of $100,000, except for architect-engineer acquisitions, acquisitions awarded under the Federal Acquisition Regulation (FAR) Subpart 8.6, Acquisitions from Federal Prison Industries, Incorporated, FAR Subpart 8.7, Acquisitions from Nonprofit Agencies Employing People Who Are Blind or Severely Disabled, and FAR 13.5, Test Program for Certain Commercial Items. FAR 36.604 provides detailed instructions for architect-engineer contractor performance evaluations.

* * * * *

(c) EPA Form 1900–26, Contracting Officer's Evaluation of Contractor Performance, and EPA Form 1900–27, Project Officer's Evaluation of Contractor Performance, applies to all performance evaluations completed prior to May 26, 1999. Thereafter, EPA Forms 1900–26 and 1900–27 are obsolete, and contracting officers shall complete all contractor performance evaluations by use of the National Institutes of Health's Contractor Performance System in accordance with EPAAR paragraph (a) of this section.

(d) Construction acquisitions shall be completed by use of the NIH construction module. Performance evaluations for construction acquisitions shall be completed in accordance with EPAAR 1509.170–5.

3. Section 1509.170–4 is amended by revising the last sentence of paragraph (f) to read as follows:

1509.170–4 Definitions

* * * * *

(f) * * * Performance categories include quality, cost control, timeliness of performance, business relations, compliance with labor standards, compliance with safety standards, and meeting Small Disadvantaged Business subcontracting requirements.

4. Section 1509.170–5 is amended by revising paragraph (b) to read as follows:

1509.170–5 Policy

* * * * *

(b) For service type acquisitions, contracting officers shall use the National Institutes of Health (NIH) Contractor Performance System to record evaluations for all contract performance periods expiring after May 26, 1999. For construction type acquisitions, contracting officers shall use the NIH system to record evaluations for all contract performance periods expiring after [the effective date of the final rule].

* * * * *

5. Section 1509.170–8 is amended by revising paragraph (b) to read as follows:

1509.170–8 Contractor Performance Report

* * * * *

(b) The performance categories and ratings used in the evaluation of contractor performance are described in the clause at 1552.209–76. The NIH system provides instructions to assist contracting officers and project officers with completing evaluations.

PART 1552—[AMENDED]

6. Section 1552.209–76 is amended by revising the undesignated text between the section heading and paragraph (a), revising paragraphs (a)(2), (b)(2) and (b)(4) to read as follows:

1552.209–76 Contractor Performance Evaluations.

As prescribed in section 1509–170–1, insert the following clause in all applicable solicitations and contracts.

Contractor Performance Evaluations (XX 2002)

The contracting officer shall complete a Contractor Performance Report (Report) within ninety (90) business days after the end of each 12 months of contract performance (interim Report) or after the last 12 months (or less) of contract performance (final Report) in accordance with EPAAR 1509.170–5. The contractor shall be evaluated based

on the following ratings: 0 = Unsatisfactory, 1 = Poor, 2 = Fair, 3 = Good, 4 = Excellent, 5 = Outstanding, N/A = Not Applicable.

The contractor may be evaluated based on the following performance categories: Quality, Cost Control, Timeliness of Performance, Business Relations, Compliance with Labor Standards, Compliance with Safety Standards, and Meeting Small Disadvantaged Business Subcontracting Requirements.

(a) * * *

(2) Evaluate contractor performance and assign a rating for quality, cost control, timeliness of performance, compliance with labor standards, and compliance with safety standards performance categories (including a narrative for each rating);

* * * * *

(b) * * *

(2) Assign a rating for the business relations and meeting small disadvantaged business subcontracting requirements performance categories (including a narrative for each rating).

* * * * *

(4) Provide any additional information concerning the quality, cost control, timeliness of performance, compliance with labor standards, and compliance with safety standards performance categories if deemed appropriate for the evaluation or future evaluations (if any), and provide any information regarding subcontracts, key personnel, and customer satisfaction; and

* * * * *

Dated: January 24, 2002.

John Oliver,

Acting Director, Office of Acquisition Management.

[FR Doc. 02–4068 Filed 2–19–02; 8:45 am]

BILLING CODE 6560–50–P

DEPARTMENT OF COMMERCE

National Oceanic and Atmospheric Administration

50 CFR Part 226

[Docket No. 020124019–2019–01, I.D. 030601D]

Endangered and Threatened Species; Determination on a Petition to Revise Critical Habitat for Northern Right Whales in the Pacific

AGENCY: National Marine Fisheries Service (NMFS), National Oceanic and Atmospheric Administration (NOAA), Commerce.

ACTION: Response to petition; final determination.

SUMMARY: On October 13, 2000, NMFS received a petition dated October 4, 2000, requesting that NMFS revise the present critical habitat designation for the northern right whale under the Endangered Species Act (ESA) by designating a new area within the eastern Bering Sea as critical habitat for right whales in the North Pacific. NMFS has determined that the petition is not warranted at this time. NMFS recognizes that the revision of critical habitat may be prudent, but finds that the extent of critical habitat cannot be determined at this time because the essential biological requirements of the population in the North Pacific Ocean are not sufficiently understood. NMFS will continue to analyze issues raised by the petition following the completion of planned 2002 right whale surveys and research.

ADDRESSES: Comments and requests for copies of this determination should be addressed to the Division Chief, Marine Mammal Division, Office of Protected Resources, NMFS, 1315 East-West Highway, Silver Spring, MD 20910.

FOR FURTHER INFORMATION CONTACT: Bradley Smith, Alaska Regional Office, NMFS, Anchorage, AK, (907) 271–5006; Michael Payne, Alaska Regional Office, NMFS, Juneau, AK, (907) 586–7236; or Caroline Good, Marine Mammal Division, Office of Protected Resources, NMFS, Silver Spring, MD, (301) 713–2322.

SUPPLEMENTARY INFORMATION:

Background

Right whales in the North Pacific are one of three populations of endangered right whales worldwide. The other populations occur in the North Atlantic and the Southern Hemisphere. The southern right whale is recognized as a separate species but the North Atlantic and North Pacific stocks have heretofore been described as a single species. Recent genetic studies, however, provide conclusive evidence supporting separate species status for these populations, one in the North Atlantic and another in the North Pacific. The International Whaling Commission's (IWC) Scientific Committee formally recognized a three species classification for right whales at its 2000 meeting in Adelaide, Australia. NMFS has reviewed and concurs with the taxonomic changes suggested by the IWC and is working to have the right whale populations listed as distinct species under the Endangered Species Act.

Status of the North Pacific Right Whale

Exploitation: Right whales in the North Pacific historically occurred across the Pacific Ocean north of 35 degrees North latitude, with concentrations in the Gulf of Alaska, eastern Aleutian Islands, southcentral Bering Sea, Sea of Okhotsk, and the Sea of Japan. They were heavily exploited by commercial whaling in the western North Pacific in the 18th and 19th centuries from the Sea of Japan into the Okhotsk Sea, and along the east side of the Kamchatka peninsula. Considerable offshore hunting also occurred eastward of the Kurile Islands as far as 170 degrees East longitude. Right whales were harvested in the eastern North Pacific from the southeastern Bering Sea to, and throughout, the Gulf of Alaska in the 19th and 20th centuries. In the mid 1900s illegal whaling by the Soviets is believed to have decimated the remaining population of right whales in the eastern North Pacific (Doroshenko 2000). Practically all right whaling in the northern hemisphere occurred during summer months.

Abundance and Trends: Data are insufficient to estimate the pre-exploitation size of this population of right whales. However, based upon catch levels, right whale abundance likely exceeded 10,000 animals in the North Pacific. This stock was severely depleted due to commercial and illegal whaling and remains so today. No reliable population estimate presently exists for this stock. Rice (1974) stated that only a few hundred individuals remained in the North Pacific stock and that for all practical purposes this stock was extinct because no sightings of a cow with a calf have been confirmed since 1900. This number has remained in the literature as the maximum number estimated for this stock although fewer than several hundred are believed to remain in the eastern North Pacific. Ferrero *et al.* (2000) indicated that only 14 individual animals were photographed from 1998 though 2000 with 2 re-sightings. This paucity of sightings and re-sightings, despite considerable survey effort, suggests that the population is indeed very small, perhaps in the tens of animals.

Recent Sightings: Prior to 1996 right whale sightings were so rare in the eastern North Pacific that single sightings have resulted in scientific publications (e.g. Carretta *et al.* 1994; Rowlett *et al.* 1994). The paucity of sightings of right whales in the eastern North Pacific was apparent despite high levels of survey effort in the region, notably from Japanese sighting surveys (Miyashita *et al.* 1995). Recent summer sightings of right whales in the eastern Bering Sea (Goddard and Rugh 1998; Tynan 1998, 1999; Tynan *et al.* 2001; Moore *et al.* 2000; LeDuc *et al.* 2001) represent the first reliable observations

of associated groups in the eastern Bering Sea since the 1960s.

Several right whales have been seen each year from NMFS survey platforms since 1996 (NMFS 2000; LeDuc *et al.* 2001). A group of 3–4 right whales was seen on July 30, 1996, in western Bristol Bay, AK (Goddard and Rugh 1998). This group may have included a juvenile animal. In July 1997, a group of 4–5 individuals was encountered in Bristol Bay, followed by a second sighting of 4–5 whales the following morning in approximately the same location and considered to be the same whales (Tynan 1999). Five, six and 13 whales respectively were again found in the same general region of the southeastern Bering Sea in July 1998, July 1999, and July 2000 (LeDuc *et al.* 2001). Genetic samples taken from 6 whales in 1997 (3 individuals) and 1999 (4 individuals with one re-capature) indicated they were all males (LeDuc *et al.* 2001). Of all whales photographed, three each from 1998 and 1999, and seven from 2000 were adequate for individual identification. Among these, the only resightings were a single whale seen in all three years (LeDuc *et al.* 2001) and one whale seen in 1998 and 1999. Additionally, two right whales were observed during a vessel-based survey in the central Bering Sea in July 1999. Eight right whales were seen in July 2000; six were previously unobserved individuals, one was a re-sight and one could not be reliably identified.

Seasonal Movements and Habitat Use: Historical whaling records provide the only information on possible migration patterns and habitat for North Pacific right whales. During the summer whales were found in the Gulf of Alaska, along both coasts of the Kamchatka Peninsula, the Kuril Islands, the Aleutian Islands, the southeastern Bering Sea, and in the Okhotsk Sea. The whales were the most widely dispersed in fall and spring with whales occurring in mid-ocean waters and extending from the Sea of Japan to the eastern Bering Sea. In winter, right whales were found in the Ryukyu Islands (south of Kyushu, Japan), the Bonin Islands, the Yellow Sea, and the Sea of Japan. Current distribution patterns and migration routes of these whales are not known. Historical concentrations of sightings in the Bering Sea together with the recent sightings indicate that this region remains an important summer habitat for eastern North Pacific right whales (Tynan *et al.* 2001). Little is known, however, regarding the current migration patterns of the eastern North Pacific population.

Breeding and Calving: The location of calving grounds for this stock is unknown. Breeding and calving of North Pacific right whales were assumed to have occurred during winter, outside Alaskan waters. Recent observations of courtship behavior do not necessarily indicate this area is used for breeding.

Prey: Right whales in the North Pacific probably feed almost exclusively on calanoid copepods, a type of zooplankton. High concentrations of copepods have been recorded in zooplankton samples collected in 1997 and 1999 near right whales in the North Pacific. Based on historical information, foraging observations, and current information on the foraging distribution of North Atlantic right whales, it is likely that the area where right whales have been observed in the eastern Bering Sea is used for foraging.

Distribution of Feeding Observations Relative to Recent Oceanographic Changes in the Eastern Bering Sea: The Bering Sea has undergone large changes in recent years, attributed in part to climatic change which has resulted in a general warming pattern since the mid 1970s. Unusual blooms of zooplankton have been noted here. Copepod concentrations in the middle shelf domain of the eastern Bering Sea in 1997 were the highest recorded since the early 1980s (Napp and Hunt 2001). A sustained phytoplankton bloom occurred in the southeastern Bering Sea (Napp and Hunt 2001) in 1997. Both of these features persisted at least through 2000. This increased concentration of zooplankton may have attracted feeding right whales to this area. However, the petitioner notes that the presence of these whales in subsequent years, when phytoplankton blooms were not evident, suggests these waters provide productive foraging habitat under varying oceanic conditions. Tynan *et al.* (2001) suggested that right whales in the Bering Sea may have shifted their foraging ground (from the shelf break and deeper waters) in response to the increased densities of prey in the middle shelf.

Status of North Pacific Right Whales Under the Endangered Species Act

Right whales in U.S. waters were listed as endangered under the Endangered Species Conservation Act, the precursor to the ESA, on June 2, 1970 (35 FR 8495; codified at 50 CFR Section 17.11). The species was subsequently listed as endangered under the ESA in 1973, and as depleted under the Marine Mammal Protection Act in the same year. NMFS has the lead responsibility for the recovery program for this species.

NMFS published a Final Recovery Plan for Northern Right Whales (Recovery Plan) in 1991. The 1991 Recovery Plan recommended that a separate plan be prepared for the North Pacific stock ''when population numbers are available'' and further stated that the plan should identify habitats essential or important to survival and recovery. A draft Recovery Plan for the North Pacific population of right whales (NMFS, unpublished) is being prepared and much of the scientific information in this **Federal Register** notice comes from information in the draft Recovery Plan.

NMFS designated critical habitat for northern right whales on June 3, 1994 (59 FR 28793; codified at 50 CFR 226.203). NMFS designated 3 areas in the North Atlantic Ocean off the eastern United States: two feeding and nursery areas in waters off the northeastern United States, and a winter calving and nursery area in waters off the southeastern United States. Not enough information was available to consider critical habitat designation for any other stock of northern right whale including that in the North Pacific at the time of the 1994 designation. The western North Atlantic population was considered the population that stood to benefit most from recovery actions (NMFS 1991).

Response to the Comments Received on the Petition

Section 4(b)(3)(D)(i) of the ESA requires that NMFS, to the maximum extent practicable after receiving a petition to revise existing critical habitat, make a finding as to whether the petition presents substantial scientific or commercial information to demonstrate that the petitioned action may be warranted and publish the finding in the **Federal Register**. If the finding is that substantial scientific information is presented, NMFS is required, within 12 months of the date the petition was received, to make a determination on how to proceed with the requested revision and promptly publish notice of such intention in the **Federal Register**.

On June 1, 2001 (66 FR 29773), NMFS published a notice finding the subject petition contained substantial scientific information indicating that revision of critical habitat for the right whale may be warranted and inviting interested persons to submit comments and information concerning revision. NMFS received over 1,000 letters on the petition during the comment period. The comments are addressed in the following paragraphs.

Comment 1: NMFS received many letters from the public stating that the petitioned area meets the definition of critical habitat because the area is used annually by right whales as an important feeding and courtship area.

Response: Recent NMFS surveys have documented right whales in a relatively small area of the southeastern Bering Sea within the area petitioned as critical habitat (LeDuc *et al.* 2001). Feeding behavior and possible courtship behavior have been observed. While repeated sightings of right whales during NMFS surveys have occurred within the southeastern Bering Sea, NMFS does not find that these observations allow for any extrapolation into the broader area recommended by the petitioner. Rather, the discreteness of the area where right whales have been observed suggests that the entire region is not a biologically homogeneous habitat and, therefore, an assumption cannot be made that right whales would occur throughout a larger area.

The Bering Sea has undergone profound ecological changes over the past decades. These changes have likely resulted in subsequent changes in species composition and distribution among the zooplankton which comprise the primary prey of right whales. Plankton blooms in the eastern Bering Sea have been observed since 1996 and may be the principle reason that right whales have concentrated in this area in recent years. Therefore, the current sighting aggregations may be the result of conditions that have been present for only a few years. Data are very limited on this subject, but the current sighting distribution data do not support the assertion that the entire area proposed by the petitioner as critical habitat contains the physical and biological features essential to the conservation of right whales.

Comment 2: Many commenters indicated that a revision to critical habitat is appropriate because critical habitat would protect right whales from major sources of mortality such as ship strikes and entanglement in fishing gear.

Response: Mortality due to ship strikes and fishing gear entanglement are the two known human-related causes of mortality in the North Atlantic right whale population and are believed to be slowing the recovery of North Atlantic right whales. The commenters, however, assumed that human activities which affect right whales off the eastern United States are the same as those currently affecting right whales in the eastern Bering Sea. The petitioners made similar assumptions.

The distribution of right whales off the eastern United States is congruent with several major shipping ports including the ports of Boston, New York and Jacksonville, among others. Furthermore the areas designated as critical habitat all have major shipping channels running through them.

The likelihood of a vessel striking a right whale in these areas sometime throughout the year, or throughout the lifetime of a whale, is extremely high and this is reflected in the mortality data from recent years. The whales are exposed to a high level of vessel traffic because major shipping channels overlap with calving and foraging grounds.

Conditions in the eastern Bering Sea differ from the East Coast. There are no major ports and no dredged shipping lanes in the area. The major shipping channel runs from Unimak Pass westward below the Pribilof Islands. This is south of the petitioned area and the area where right whales have been sighted in recent years. However, the lack of shipping lanes within the petitioned area does not mean that the whales are free from the risk of ship strike in the surrounding area. Right whales may cross through the Unimak pass shipping lane as they migrate in and out of the Bering Sea. No incident of a ship striking a whale in the eastern Bering Sea has been recorded. The only vessels that routinely operate within the petitioned area are fishing vessels which have no history of striking right whales in the Pacific Ocean.

Many commenters and the petitioner also made similar comments with regard to the likelihood of entanglement in the eastern Bering Sea. Again, most right whales in the North Atlantic have scarring from having been entangled in or come into contact with gillnets or lobster gear. The sighting data in the eastern Bering Sea do not indicate that these whales have similar scarring patterns. No gillnets are used within the petitioned area since they are prohibited by law beyond State waters in Alaska. The principal fisheries in the eastern Bering Sea are the pelagic trawl and crab fisheries. Many of the larger fishing vessels in the eastern Bering Sea are required to have observers, and these observers have never reported an entanglement of a right whale in fishing gear in the eastern Bering Sea. The petitioners refer to an entangled right whale off Kamchatka, Russia; however, NMFS has no information on the circumstances or the gear type that was involved in that entanglement.

Comment 3: Several commenters called for the development of a recovery plan for this species.

Response: NMFS is currently preparing a Recovery Plan for the North Pacific right whale. That plan will present the current status of the species, and provide guidelines for management and research actions necessary to conserve and recover the North Pacific right whale. A draft plan is expected to be available for public comment in 2002.

Comment 4: Several commenters urged NMFS to evaluate and possibly revise the current designated critical habitat for the North Atlantic right whale.

Response: NMFS appreciates the comment to review the current critical habitat designation for the right whale in the North Atlantic. Regulations at 50 CFR 424.12(g) provide for revisions to existing critical habitat designations as new data become available. This recommendation, however, falls outside of the scope of the petitioned action under consideration at this time. NMFS may consider this request following review of existing information under a separate action but it will not be considered as part of this action.

Comment 5: One commenter stated that if additional sightings of right whales are made outside the proposed critical habitat, the boundaries should be altered accordingly.

Response: NMFS cannot concur that any future sightings of right whales would automatically require further revision of the proposed critical habitat. This is inconsistent with the ESA, as critical habitat must meet the definition within that act, as well as being prudent and determinable. The presence of an animal in a given area does not necessarily support designation or revision. NMFS will, however, review any future sightings in light of the ESA criteria to determine if a revision or designation of critical habitat is warranted.

Comment 6: Two commenters stated that recent sightings of right whales in the southeastern Bering Sea allow for the delineation of an area essential to the species which was not known at the time the 1991 Right Whale Recovery Plan was written.

Response: NMFS agrees that designation of critical habitat may be a necessary component of any effort to conserve and recover this species. The ESA contains language that directs NMFS to identify and designate critical habitat, and to revise that designation when necessary. However, NMFS does not believe that a revision of critical habitat is possible at this time based upon existing information identified in the petition.

Comment 7: Several commenters encouraged NMFS to conduct more research, increase funding for this effort, and work toward defining the extent of habitat used by this species.

Response: NMFS agrees that continued research is necessary to fully describe the biology of this species and to identify important and critical habitats. NMFS anticipates that the recent survey effort will continue at similar levels, and that the scope of future investigation may include tagging studies, genetic analyses, photo-identification, long-term acoustic recordings through the use of autonomous bottom-founded hydrophones, and distributional surveys in the Bering Sea outside of the area surveyed during recent efforts.

Comment 8: One commenter urged NMFS to develop regulations for protecting right whales in the North Pacific.

Response: NMFS can consider rule-making independent of a critical habitat designation should such a regulation be required or deemed necessary. However, there is no need for a regulation at this time because there are no activities known to have an adverse effect on right whales in this area.

Comment 9: One commenter stated that the criteria for critical habitat have not been met and that designation is not warranted. The commenter argued that the paucity of sightings and the level of information presently available to describe the biological needs of this species confound any assessment of the petitioned area's importance to the conservation of the right whale.

Response: NMFS agrees that the level of knowledge regarding the biology and habitat needs of the North Pacific right whale are not sufficiently understood to determine whether the physical and biological factors that are essential to the conservation of this species are found throughout the petitioned area. Recent sightings in the southeastern Bering Sea have involved only a relatively small number of whales; however, these individuals may comprise a significant percentage of the remaining population (which may number only in the tens of animals). The presence of these animals within a relatively small region of the Bering Sea over several years strongly suggests that an area considerably smaller than the petitioned area may contain physical features which result in prey aggregations in densities sufficient to be considered essential for the conservation of the North Pacific right whale. However, the extent and persistence of such prey aggregations are unknown at this time. NMFS recognizes that further research is needed to refine the habitat value of the sightings area and the larger continental shelf province.

Comment 10: One commenter disputed the petition's arguments regarding the presence or significance of threats due to ship strikes, entanglement, and habitat degradation.

Response: In addition to collisions with vessels and entanglements, the petition states that dredging, disturbance due to oil and gas development, and industrial noise also pose threats to right whales in this area. (Potential threats posed by shipping and fishing activities are addressed in the response to comment 2.) No dredging occurs in this area and outer continental shelf lease sale activity (for oil and gas development) has not occurred and will not be considered again during the 5–year period from 2002 through 2007. Finally, NMFS completed a comprehensive consultation under section 7 of the ESA in November 2000 on the effects of the groundfish fisheries in the Gulf of Alaska and the Bering Sea on species listed under the ESA (NMFS 2001). Neither cumulative nor action-specific threats were identified in that opinion that would adversely affect the likelihood of survival or recovery for any of the large whale species occurring in this area.

Therefore, NMFS is in general agreement with the commenter's conclusions that the potential threats identified in the petition do not occur presently within the petitioned area at levels that require special management or protective measures. If necessary, protective measures could be enacted through formal or informal consultation under section 7 of the ESA or through regulation independent of critical habitat designation. However, as understanding of North Pacific right whales increases (and if human activity in the area changes) special management considerations may be necessary to protect areas essential to the whale's survival.

Comment 11: One commenter also presented several recommendations for future research on the biology of the North Pacific right whale and the habitat value of the Bering Sea.

Response: NMFS appreciates the recommendations for continued research and for outreach programs to alert fishermen to the significance of right whales in the Bering Sea. Several of these measures have already been incorporated into our research efforts, and others may be considered as the North Pacific Right Whale Recovery Plan is finalized.

Determination on the Petition

The natural history information presented in the petition is largely factual and represents a thorough review of existing data. NMFS, however, disagrees with most of the conclusions and statements made by the petitioners based on that review.

The petition largely bases its recommendations for critical habitat revision on the following points: (1) the Right Whale Recovery Plan calls for the protection of habitat essential to the survival and recovery of this stock; (2) revision would benefit the stock, as it would provide an added layer of protection against harm; and (3)the revision is prudent and determinable as defined under 50 CFR 424.12. Further, in the Executive Summary, the petitioners state that ''the [right whale] recovery team recommended that once areas essential to the conservation of Pacific right whales were identified, those areas should be designated as critical habitat and protected to the full extent of the law.''

NMFS concurs with the first two of these statements, but disagrees that the revision is determinable at this time. Section 3(5)(A)(i) of the ESA defines critical habitat as specific areas (I) ''essential to the conservation of the species'' and (II) ''which may require special management considerations or protection''.

With regard to section 3(5)(A)(i)(I) most of the information on the distribution and abundance of this species comes from historical whaling records and survey sightings since 1996. NMFS has a paucity of information upon which to determine whether the extent of the area petitioned contains ''physical or biological features essential to the conservation of the species.'' Based upon the repeated observations of right whales within a relatively small area of the southeastern Bering Sea, NMFS could perhaps conclude that physical features exist within this area that have resulted in biological features (concentrations of prey) that are essential to the successful foraging of the few right whales that have been sighted in recent years. No data exist, however, to indicate from the sighting distribution or known biology that these features (i.e., prey densities sufficient to lead to right whale aggregations) are found throughout the remainder of the area identified in the petition to designate critical habitat. In fact, the sighting distribution suggests that the essential features attracting right whales are not distributed throughout the petitioned area, and may be unique to

specific locations in the eastern Bering Sea.

The most reasonable conclusion is that a much smaller area than that petitioned may contain physical and biological features that are essential to the conservation of the species, but information is insufficient to extrapolate that conclusion to the entire area petitioned. The lack of a more widespread distribution of these sightings within the petitioned area (or more specifically, the definite clustering of these whales at the same locations since 1996), indicates that the area of sightings is different with regard to successful foraging than the remainder of the area that was identified in the petition.

Another pertinent issue is whether these physical and biological features are permanent or ephemeral. It is not known, based on the literature, whether the zooplankton densities present since 1996 occurred in that location in previous years and, therefore, whether right whale aggregations likewise occurred. Given current population levels, right whales are challenging to detect under almost any circumstances. Nonetheless, right whales have been seen in this area since 1996, and the lack of sightings from any source (there have been numerous vessel surveys in this area since the 1970s that included seabird and marine mammal observers) prior to the mid–1990s would support a conclusion that the whales have recently moved into this area.

If right whales have recently moved into this area, it is possible that the present conditions, which provide sufficient prey densities for foraging, are ephemeral. It would be neither prudent nor beneficial to the species to specify an area as critical habitat only to have the whales aggregate in other unprotected areas in the future. Thus, while the locations where essential features can be found are reasonably well known for the North Atlantic population, such locations and the fidelity of right whales to those locations have not been well established for North Pacific right whales.

With regard to the requirements of section 3(5)(A)(i)(II), NMFS has reviewed all the activities that are present, or may be present, in the petitioned area in the foreseeable future and cannot conclude that the area may require special management considerations. Potential threats from fishing activity, shipping, and oil and gas development do not appear to present any immediate threat to right whales.

Gillnets and lobster gear are the principal gear types implicated in entanglements on the eastern seaboard. Gillnets are not used to fish outside of State of Alaska waters, and are not fished during the period when whales are known to be present in the petitioned area. Therefore, they are unlikely to pose a threat in the petitioned area. Pot gear used in the Bering Sea crab fishery is different from the lobster pot gear that has entangled whales on the East coast. Lobster pots are connected using small-diameter, floating polypropylene line that has a track record of entangling right whales. Bering sea crab gear is different. The pots are much larger, requiring heavier line, and the gear generally does not contain the ''entangling'' features of lobster gear.

Dredging is not an issue in the eastern Bering Sea. Vessel traffic is not a significant issue in the eastern Bering Sea or the petitioned area. Most large vessels move south of the Pribilof Islands. Finally, lease sales for oil and gas exploration are not scheduled for the 2002–2007 period.

NMFS has stated that the primary benefit of specifying critical habitat is notification to Federal agencies that a certain area is crucial to a listed species, allowing agencies to plan projects while considering the listed species and its needs. The principal activity in this petitioned region is a Federally-managed groundfish fishery. NMFS completed a comprehensive consultation under section 7 of the ESA in November 2000 on the effects of the groundfish fisheries in the Gulf of Alaska and the Bering Sea on species listed under the ESA. There were neither cumulative nor action-specific threats identified in that opinion that would adversely affect the likelihood of survival or recovery for any of the large whales in this area.

Until such time that more information becomes available on the occurrence and distribution of this species, NMFS' conclusion is that no special management considerations apply to the entire area being petitioned for critical habitat designation at this time. However, NMFS does recognize that this situation can change. Potential critical habitat may not require special management measures now, but may require special management sometime in the future.

The question then remains whether those features essential to the conservation of the species exist throughout the petitioned area and whether they are ''determinable''.

Regulations at 50 CFR 424.12(a)(2) state that a designation of critical habitat is not determinable when one or both of the following situations exist:

(i) Information sufficient to perform required analyses of the impacts of the designation is lacking, or

(ii) The biological needs of the species are not sufficiently well known to permit identification of an area as critical habitat.

NMFS believes that all required analyses of impacts could be performed. However, NMFS lacks sufficient knowledge of the species' needs to identify critical habitat. Regulations at 50 CFR 424.12 indicate that physical and biological features essential for the conservation of the species include feeding sites. The regulations further state that each critical habitat will be defined by specific limits using reference points and lines as found on standard maps of the area. Ephemeral reference points cannot be used in defining critical habitat.

The area petitioned for critical habitat revision is recognized as a region of the Bering Sea where right whales occurred historically. Also, small, but significant, groups of right whales have been observed in a relatively small area of the southeastern Bering Sea since 1996, and feeding and possible courtship behaviors have been observed. However, the area of the sightings cannot be compared with the area petitioned for revision, or the remainder of the range of the North Pacific right whale, without more comprehensive survey data. Nor could an assessment that this area is essential to the species' conservation be supported.

Given the available information, NMFS concludes that: (1) the information does not indicate that physical or biological features that are essential to the conservation of the species exist throughout the petitioned area; and (2) a much smaller area than the petitioned area may contain such essential features, but the geographic boundaries within which such essential features exist are presently indeterminable. Therefore, at this time NMFS cannot conclude that the petitioned area or any specific region within the petitioned area constitutes critical habitat. The scientific information necessary to make critical habitat ''determinable'' for the eastern Bering Sea stock of right whales is not currently available. Based on the best available information, NMFS has determined that the petitioned action is not warranted at this time.

How Does NMFS Intend to Proceed?

Section 4(b)(3)(D)(ii) of the ESA requires that NMFS, within 12 months of the date the petition was received, make a determination on how to proceed with the requested revision and

promptly publish notification of such intention in the **Federal Register**. NMFS made that determination in a previous paragraph of this notice, however, the agency will continue to analyze the issues raised in the petition in the following manner.

NMFS will continue with planned research activities during 2002 and evaluate any new information to better define the boundaries of an area that may be considered critical. In addition, NMFS will, through the ESA section 7 consultation process, continue to evaluate whether the area may require special management considerations.

To further define an area that might be essential to this population NMFS intends to:

(1) Conduct an extensive vessel-based survey in the eastern Bering Sea during July-August 2002 using experienced observers trained in the use of ''Big Eye'' (5X) binoculars. Additionally, passive acoustic techniques (moored-buoys) will be used to detect whales. If right whales continue to be sighted in the relatively limited area identified by prior sightings then the boundaries of what might be considered essential will be revisited. It is probable that the summer foraging season will be the only season for which NMFS can obtain further information on this population during the next 12 month period.

(2) If feasible, attempt to satellite-tag North Pacific right whales to determine movement patterns and distribution, at least during late summer and fall. NMFS anticipates that the whales are not going to remain in one spot as the foraging season ends and fall-winter movements occur. However, whether the population remains in the petitioned area or moves south off the shelf is not known.

(3) Re-examine all genetic information to determine whether the eastern Bering Sea stock and Sea of Okhotsk stock of North Pacific right whales can be differentiated genetically. However, it should be re-emphasized that these stocks are currently considered one species under the ESA and treated as such. There are so few samples available for such an analysis that it is doubtful that NMFS will be able to determine any further similarities or dissimilarities between the two stocks even if they exist.

(4) Conduct an economic analysis (as required by the ESA) on any critical habitat area that may be proposed by NMFS.

(5) Continue to examine historical and newly acquired data to determine whether any area, not just the petitioned area, should be proposed as critical habitat for North Pacific right whales.

All references are available upon request (See **FOR FURTHER INFORMATION CONTACT**).

Authority: 16 U.S.C. 1531, *et seq.*

Dated: February 13, 2002.

William T. Hogarth,

Assistant Administrator for Fisheries, National Marine Fisheries Service.

[FR Doc. 02–4087 Filed 2–19–02; 8:45 am]

BILLING CODE 3510–22–S

Notices

Federal Register

Vol. 67, No. 34

Wednesday, February 20, 2002

This section of the FEDERAL REGISTER contains documents other than rules or proposed rules that are applicable to the public. Notices of hearings and investigations, committee meetings, agency decisions and rulings, delegations of authority, filing of petitions and applications and agency statements of organization and functions are examples of documents appearing in this section.

AGENCY FOR INTERNATIONAL DEVELOPMENT

Notice of Public Information Collections Being Reviewed by the Agency for International Development; Comments Requested

SUMMARY: U.S. Agency for International Development (USAID) is making efforts to reduce the paperwork burden. USAID invites the general public and other Federal agencies to take this opportunity to comment on the following proposed and/or continuing information collections, as required by the Paperwork Reduction Act for 1995. Comments are requested concerning: (a) Whether the proposed or continuing collections of information is necessary for the proper performance of the functions of the agency, including whether the information shall have practical utility; (b) the accuracy of the burden estimates; (c) ways to enhance the quality, utility, and clarity of the information collected; and (d) ways to minimize the burden of the collection of information on the respondents, including the use of automated collection techniques or other forms of information technology.

DATES: Submit comments on or before April 22, 2002.

FOR FURTHER INFORMATION CONTACT: Beverly Johnson, Bureau for Management, Office of Administrative Services, Information and Records Division, U.S. Agency for International Development, Room 2.07–106, RRB, Washington, DC 20523, (202) 712–1365 or via e-mail *bjohnson@usaid.gov.*

SUPPLEMENTARY INFORMATION:

OMB No: OMB 0412–0506.

Form No.: AID 1420–50.

Title: Vendor Database (formerly known as ACRIS) Instruction Books for the Organization Profile.

Type of Review: Renewal of Information Collection.

Purpose: USAID procuring activities are required to establish bidders mailing lists to assure access to sources and to obtain meaningful competition (41 CFR section 1–2.205). In compliance with this requirement, USAID's Office of Small and Disadvantaged Business Utilization/Minority Resource Center has responsibility for developing and maintaining a Contractor's Index of bidders/offerors capable of furnishing services for use by the USAID procuring activities. (AIDAR 719.271–2(b)(4)).

Annual Reporting Burden

Respondents: 1,000.

Total annual responses: 1,000.

Total annual hours requested: 1,000 hours.

Dated: February 12, 2002.

Joanne Paskar, Chief,

Information and Records Division, Office of Administrative Services, Bureau for Management.

[FR Doc. 02–4042 Filed 2–19–02; 8:45 am]

BILLING CODE 6116–01–M

DEPARTMENT OF AGRICULTURE

Forest Service

Helena National Forest Weed Treatment Project Helena National Forest, Powell, Lewis & Clark, Jefferson, Broadwater, and Meagher Counties, Montana

AGENCY: Forest Service, USDA.

ACTION: Notice; intent to prepare Environmental Impact Statement.

SUMMARY: The USDA, Forest Service will prepare an Environmental Impact Statement (EIS) for weed treatments on the Helena National Forest including wilderness and roadless areas. The treatment plan will utilize an integrated pest management approach, utilizing a variety of chemical, biological and mechanical controls. Chemical treatments will include both ground and aerial herbicide applications.

Further analysis of the proposed action and alternatives to that proposal may result in a decision(s) that includes amendments to the Forest Plan.

DATES: Comments concerning the scope of the analysis should be received in writing no later than June 1, 2002.

ADDRESSES: The responsible official is Thomas J. Clifford, Forest Supervisor, Helena National Forest, Supervisor's Office, 2880 Skyway Drive, Helena, MT 59601. Phone: (406) 449–5201.

FOR FURTHER INFORMATION CONTACT: Dea Nelson, Townsend Ranger District, 415 So. Front Townsend, MT 59644. Phone: (406) 266–3425.

SUPPLEMENTARY INFORMATION: The project would occur on National Forest lands of the Townsend, Helena, and Lincoln Ranger Districts. Treatments would take place in general forest zones as well as the Elkhorn Wildlife Management Area, the Gates of the Mountains Wilderness Area, the Scapegoat Wilderness Area and inventoried roadless areas. The treatment plan will utilize an integrated pest management approach, utilizing a variety of chemical, biological and mechanical controls. Chemical treatments will include both ground and aerial herbicide applications. Approximately 18,000 acres will be treated with ground based application equipment and approximately 5,000 acres with aerial equipment, either fixed wing or helicopters. Chemical applications will take place at the appropriate time of year for the individual weed species. Biological controls will be introduced where appropriate and as they become available. These will include insects, pathogens, and grazing of livestock such as sheep or goats to control weeds in situations where similar practices have been successful in other locations. Some particularly sensitive area or areas of small, new infestations may be treated mechanically, which could include hand pulling or cultivation.

This EIS will tier to the Helena Forest Plan Final EIS of April 1986, that provides program goals, objectives, and standards and guidelines for conducting management activities in this area. All activities associated with the proposal will be designed to maintain or enhance the resource objectives identified in the Forest Plan.

The Forest Service is seeking information and comments from Federal, State, and local agencies together with organizations or individuals who may be interested in or affected by the proposed action. The Forest Service invites written comments and suggestions on the issues for the proposal and the area being analyzed. Information received will be used in preparation of the Draft EIS.

Preparation of the EIS will include the following steps:

1. Identification of issues to be analyzed in depth.

2. Identification of additional reasonable alternatives.

3. Identification of potential environmental effects of the alternatives.

Alternatives to this proposal will include the ''no action'' alternative, and other alternatives will examine variations in the amount and method of weed treatment.

The preliminary issues identified are:

1. The potential impacts of noxious weed treatment on wildlife.

2. The potential impacts of noxious weed treatment on water quality and fisheries.

3. The potential impacts of noxious weed treatment on native grasses, forbs, shrubs and trees.

4. The potential effects on human health from herbicide use.

5. The potential effects of noxious weed treatment in Wilderness Areas on the quality of the wilderness experience.

The Forest Service will analyze and disclose in the DEIS and FEIS the environmental effects of the proposed action and a reasonable range of alternatives. The DEIS and FEIS will disclose the direct, indirect and cumulative environmental effects of each alternative and its associated site-specific mitigation measures.

Public participation is especially important at several points of the analysis. Interested parties may visit with the Forest Service officials at any time during the analysis. However, two periods of time are specifically identified for the receipt of comments. The first comment period is during the scoping process when the public is invited to give written comments to the Forest Service. The Helena National Forest would like to receive scoping comments by June 1, 2002. The second review period is during the 45 day review of the DEIS when the public is invited to comment on the DEIS.

The DEIS is expected to be filed with the Environmental Protection Agency (EPA) and available for public review in August, 2002. At that time, the EPA will publish a notice of availability of the DEIS in the **Federal Register**.

The comment period on the DEIS will be 45 cays from the date the notice of availability is published in the **Federal Register**.

At this early stage in the scoping process, the Forest Service believes it is important to give reviewers notice of several court rulings related to public participation in the environmental review process. First, reviews of DEIS must structure their participation in the environmental review of the proposal so that it is meaningful and alerts an agency to the reviewer's position and contentions. *Vermont Yankee Nuclear Power Corp.* v. *NRDC. 435 U.S. 519, 553 (1978).* Secondly, environmental objections that could be raised at the draft environmental impact statement stage, but that are not raised until after completion of the FEIS may be waived or dismissed by the courts. *City of Angoon* v. *Hodel,* 803 F. 2d 10 1 6, 1022 (9th cir. 1986) and *Wisconsin Hermitages, Inc.* v. *Harris,* 490 F. Supp. 1338 (E.D. Wis. 1980). Because of these court rulings, it is very important that those interested in this proposed action participate by the close of the 45-day comment period so that substantive comments and objections are made available to the Forest Service at a time when it can meaningfully consider them and respond to them in the FEIS.

To assist the Forest Service in identifying and considered issues and concerns on the proposed action, comments on the DEIS should be as specific as possible. It is also helpful if comments refer to specific pages or chapters of the draft statement. Comments may also address the adequacy of the DEIS or the merits of the alternatives formulated and discussed in the statement. (Reviewers may wish to refer to the Council on Environmental Quality Regulations for implementing the procedural provisions of the National Environmental Policy Act at 40 CFR 1503.3 in addressing these points.)

After the comment period ends on the DEIS, the comments will be analyzed and considered by the Forest Service in preparing the FEIS. The FEIS is expected to be filed in January, 2003.

Dated: February 12, 2002.

Thomas J. Clifford,

Forest Supervisor, Helena National Forest.

[FR Doc. 02–4051 Filed 2–19–02; 8:45 am]

BILLING CODE 3910–11–M

DEPARTMENT OF AGRICULTURE

Forest Service

Deschutes and Ochoco National Forests Resource Advisory Committee; Meeting

AGENCY: Forest Service, USDA.

ACTION: Notice of meeting.

SUMMARY: The Deschutes and Ochoco National Forests Resource Advisory Committee will meet on Thursday, March 7, 2002 and Tuesday, March 19, 2002 at the Central Oregon Intergovernmental Council building, main conference room, 2363 SW Glacier Place, Redmond, Oregon. The meeting will begin at 9 a.m. and continue until 5 p.m. Committee members will review projects proposed and make recommendations under Resource Advisory Committee consideration under Title II of the Secure Rural Schools and Community Self-Determination Act of 2000. All Deschutes and Ochoco National Forests Resource Advisory Committee meetings are open to the public. Interested citizens are welcome to attend.

FOR FURTHER INFORMATION CONTACT: Direct questions regarding this meeting to Leslie Weldon, Designated Federal Official, USDA, Deschutes National Forest, 1645 Highway 20 East, Bend, Oregon 97702, 541–383–5512.

Dated: February 13, 2002.

David Summer,

Acting Forest Supervisor, Deschutes National Forest.

[FR Doc. 02–4019 Filed 2–19–02; 8:45 am]

BILLING CODE 3410–11–M

DEPARTMENT OF AGRICULTURE

Forest Service

Hood/Willamette Resource Advisory Committee (RAC)

AGENCY: Forest Service, USDA.

ACTION: Notice of meeting.

SUMMARY: The Hood/Willamette Resource Advisory Committee (RAC) will meet on Friday, March 8, 2002. The meeting is scheduled to begin at 9 a.m. and will conclude at approximately 4 p.m. The meeting will be held at the Salem Office of the Bureau of Land Management Office; 1717 Fabry Road SE, Salem, Oregon; (503) 375–5646. The tentative agenda includes: (1) Reviewing and Recommending Projects; (2) Public Forum. The Public Forum is tentatively scheduled to begin at 1 p.m. Time allotted for individual presentations will be limited to 3–4 minutes. Written comments are encouraged, particularly if the material cannot be presented within the time limits for the Public Forum. Written comments may be submitted prior to the March 8 meeting by sending them to Designated Federal Official Donna Short at the address given below.

FOR FURTHER INFORMATION CONTACT: For more information regarding this meeting, contact Designated Federal Official Donna Short; Sweet Home Ranger District; 3225 Highway 20, Sweet Home, Oregon 97386; (541) 367–9220.

Dated: February 12, 2002.

Kim Titus,

Acting Deputy Forest Supervisor.

[FR Doc. 02–4020 Filed 2–19–02; 8:45 am]

BILLING CODE 3410–11–M

CHEMICAL SAFETY AND HAZARD INVESTIGATION BOARD

Sunshine Act Meeting

The United States Chemical Safety and Hazard Investigation Board announces that it will convene a Public Meeting beginning at 10:00 a.m. local time on February 27, 2002, at 2175 K Street, Suite 400 Conference Room. Topics will include:

Performance Goal #1: Produce Timely, High Quality Investigation Reports, Recommendations, and Other Technical Reports

1. Initiation of CSB's investigation into the January 16 fatal toxic gas release that occurred at the Georgia-Pacific Corporation's Naheola Mill.

2. Update on CSB investigation into the July 17, 2001 catastrophic failure of a storage tank containing spent sulfuric acid at Motiva Enterprise's Delaware City (Del.) refinery.

3. Update on CSB investigation into a fatal explosion at the BP Amoco Polymers plant in Augusta, Georgia on March 13, 2001, that killed three workers.

4. Results of the CSB investigation into the fatal incident that occurred on February 2, 2001, at the Bethlehem Steel Burns Harbor Mill in Chesterton, Indiana that killed two workers and injured four others.

5. CSB case study of a destructive explosion that occurred at the plant of Concept Sciences Inc., near Allentown, PA, on February 19, 1999.

6. Update on reactive chemical hazard investigation.

Performance Goal #2: Develop Effective Outreach and Partnerships With Stakeholders

7. Creation of CSB's Office of Prevention, Outreach, and Policy (OPOP).

8. CSB/National Institute of Environmental Health Sciences (NIEHS) Spring Workshop.

9. Participation in American Institute for Chemical Engineers' (AIChE) Center for Chemical Process Safety (CCPS) Activities.

Performance Goal #3: Implement a System for Chemical Accident Data Collection and Analysis That Can Be Used to Measure Prevention Effectiveness

10. CSB Data initiatives.

Enabling Goal: Enhance Management of CSB and Establish a Diverse, Highly Skilled, Productive Workforce

11. Chief Operating Officer position filling process.

12. Tentative date for next Board meeting.

The meeting will be open to the public. Please notify CSB if a translator or interpreter is needed, 10 business days prior to the public meeting. For more information, please contact the Chemical Safety and Hazard Investigation Board's Office of Congressional and Public Affairs, (202)–261–7600, or visit our Web site at: *www.csb.gov.*

Christopher W. Warner,

General Counsel.

[FR Doc. 02–4223 Filed 2–15–02; 3:54 pm]

BILLING CODE 6350–01–P

DEPARTMENT OF COMMERCE

International Trade Administration

[A–428–825]

Stainless Steel Sheet and Strip in Coils From Germany; Notice of Final Results of Antidumping Duty Administrative Review

AGENCY: Import Administration, International Trade Administration, Department of Commerce.

ACTION: Notice of Final Results of Antidumping Duty Administrative Review.

SUMMARY: On August 13, 2001, the Department of Commerce (the Department) publishedthe preliminary results of the administrative review of the antidumping duty order on stainless steel sheet and strip in coils from Germany. This review covers one manufacturer/exporter. The period of review (POR) is January 4, 1999 through June 30, 2000.

Based on our analysis of the comments received, we have made changes in the margin calculations. Therefore, the final results differ from the preliminary results. The final weighted–average dumping margin for the reviewed firm is listed below in the section entitled ''Final Results of the Review.''

EFFECTIVE DATE: February 20, 2002.

FOR FURTHER INFORMATION CONTACT: Patricia Tran, Michael Heaney, or Robert James at (202) 482–1121, (202) 482–4475, or (202) 482–0649, respectively, Antidumping and Countervailing Duty Enforcement Group III, Import Administration, International Trade Administration, U.S. Department of Commerce, 14th Street and Constitution Avenue, NW, Washington, DC 20230.

SUPPLEMENTARY INFORMATION:

The Applicable Statute and Regulations

Unless otherwise indicated, all citations to the Tariff Act of 1930, as amended (the Tariff Act), are references to the provisions effective January 1, 1995, the effective date of the amendments made to the Tariff Act by the Uruguay Round Agreements Act (URAA). In addition, unless otherwise indicated, all citations to the Department's regulations are to the regulations codified at 19 CFR Part 351 (2000).

Scope of the Review

For purposes of this order, the products covered are certain stainless steel sheet and strip in coils. Stainless steel is an alloy steel containing, by weight, 1.2 percent or less of carbon and 10.5 percent or more of chromium, with or without other elements. The subject sheet and strip is a flat–rolled product in coils that is greater than 9.5 mm in width and less than 4.75 mm in thickness, and that is annealed or otherwise heat treated and pickled or otherwise descaled. The subject sheet and strip may also be further processed (e.g., cold–rolled, polished, aluminized, coated, etc.) provided that it maintains the specific dimensions of sheet and strip following such processing.

The merchandise subject to this order is classified in the Harmonized Tariff Schedule of the United States (HTS) at subheadings: 7219.13.00.31, 7219.13.00.51, 7219.13.00.71, 7219.13.00.81, 7219.14.00.30, 7219.14.00.65, 7219.14.00.90, 7219.32.00.05, 7219.32.00.20, 7219.32.00.25, 7219.32.00.35, 7219.32.00.36, 7219.32.00.38, 7219.32.00.42, 7219.32.00.44, 7219.33.00.05, 7219.33.00.20, 7219.33.00.25, 7219.33.00.35, 7219.33.00.36, 7219.33.00.38, 7219.33.00.42, 7219.33.00.44, 7219.34.00.05, 7219.34.00.20, 7219.34.00.25, 7219.34.00.30, 7219.34.00.35, 7219.35.00.05, 7219.35.00.15, 7219.35.00.30, 7219.35.00.35, 7219.90.00.10, 7219.90.00.20, 7219.90.00.25, 7219.90.00.60, 7219.90.00.80, 7220.12.10.00, 7220.12.50.00,

7220.20.10.10, 7220.20.10.15, 7220.20.10.60, 7220.20.10.80, 7220.20.60.05, 7220.20.60.10, 7220.20.60.15, 7220.20.60.60, 7220.20.60.80, 7220.20.70.05, 7220.20.70.10, 7220.20.70.15, 7220.20.70.60, 7220.20.70.80, 7220.20.80.00, 7220.20.90.30, 7220.20.90.60, 7220.90.00.10, 7220.90.00.15, 7220.90.00.60, and 7220.90.00.80. Although the HTS subheadings are provided for convenience and Customs purposes, the Department's written description of the merchandise under review is dispositive.

Excluded from the scope of this order are the following: (1) sheet and strip that is not annealed or otherwise heat treated and pickled or otherwise descaled; (2) sheet and strip that is cut to length; (3) plate (i.e., flat–rolled stainless steel products of a thickness of 4.75 mm or more); (4) flat wire (i.e., cold–rolled sections, with a prepared edge, rectangular in shape, of a width of not more than 9.5 mm); and (5) razor blade steel. Razor blade steel is a flat–rolled product of stainless steel, not further worked than cold–rolled (cold–reduced), in coils, of a width of not more than 23 mm and a thickness of 0.266 mm or less, containing, by weight, 12.5 to 14.5

percent chromium, and certified at the time of entry to be used in the manufacture of razor blades. See Chapter 72 of the HTSUS, ''Additional U.S. Note''1(d).

In response to comments by interested parties, the Department has determined that certain specialty stainless steel products are also excluded from the scope of this order. These excluded products are described below.

Flapper valve steel is defined as stainless steel strip in coils containing, by weight, between 0.37 and 0.43 percent carbon, between 1.15 and 1.35 percent molybdenum, and between 0.20 and 0.80 percent manganese. This steel also contains, by weight, phosphorus of 0.025 percent or less, silicon of between 0.20 and 0.50 percent, and sulfur of 0.020 percent or less. The product is manufactured by means of vacuum arc remelting, with inclusion controls for sulphide of no more than 0.04 percent and for oxide of no more than 0.05 percent. Flapper valve steel has a tensile strength of between 210 and 300 ksi, yield strength of between 170 and 270 ksi, plus or minus 8 ksi, and a hardness (Hv) of between 460 and 590. Flapper valve steel is most commonly used to produce specialty flapper valves for compressors.

Also excluded is a product referred to as suspension foil, a specialty steel product used in the manufacture of suspension assemblies for computer disk drives. Suspension foil is described as 302/304 grade or 202 grade stainless steel of a thickness between 14 and 127 microns, with a thickness tolerance of plus—or–minus 2.01 microns, and surface glossiness of 200 to 700 percent Gs. Suspension foil must be supplied in coil widths of not more than 407 mm, and with a mass of 225 kg or less. Roll marks may only be visible on one side, with no scratches of measurable depth. The material must exhibit residual stresses of 2 mm maximum deflection, and flatness of 1.6 mm over 685 mm length.

Certain stainless steel foil for automotive catalytic converters is also excluded from the scope of this order. This stainless steel strip in coils is a specialty foil with a thickness of between 20 and 110 microns used to produce a metallic substrate with a honeycomb structure for use in automotive catalytic converters. The steel contains, by weight, carbon of no more than 0.030 percent, silicon of no more than 1.0 percent, manganese of no more than 1.0 percent, chromium of between 19 and 22 percent, aluminum of no less than 5.0 percent, phosphorus of no more than 0.045 percent, sulfur of no more than 0.03 percent, lanthanum of between 0.002 and 0.05 percent, and total rare earth elements of more than 0.06 percent, with the balance iron.

Permanent magnet iron–chromium–cobalt alloy stainless strip is also excluded from the scope of this order. This ductile stainless steel strip contains, by weight, 26 to 30 percent chromium, and 7 to 10 percent cobalt, with the remainder of iron, in widths 228.6 mm or less, and a thickness between 0.127 and 1.270 mm. It exhibits magnetic remanence between 9,000 and 12,000 gauss, and a coercivity of between 50 and 300 oersteds. This product is most commonly used in electronic sensors and is currently available under proprietary trade names such as ''Arnokrome III.''[1]

Certain electrical resistance alloy steel is also excluded from the scope of this order. This product is defined as a non–magnetic stainless steel manufactured to American Society of Testing and Materials (ASTM) specification B344 and containing, by weight, 36 percent nickel, 18 percent chromium, and 46 percent iron, and is most notable for its resistance to high temperature corrosion. It has a melting point of 1390 degrees Celsius and displays a creep rupture limit of 4 kilograms per square millimeter at 1000 degrees Celsius. This steel is most commonly used in the production of heating ribbons for circuit breakers and industrial furnaces, and in rheostats for railway locomotives. The product is currently available under proprietary trade names such as ''Gilphy 36.''[2]

Certain martensitic precipitation–hardenable stainless steel is also excluded from the scope of this order. This high–strength, ductile stainless steel product is designated under the Unified Numbering System (UNS) as S45500–grade steel, and contains, by weight, 11 to 13 percent chromium, and 7 to 10 percent nickel. Carbon, manganese, silicon and molybdenum each comprise, by weight, 0.05 percent or less, with phosphorus and sulfur each comprising, by weight, 0.03 percent or less. This steel has copper, niobium, and titanium added to achieve aging, and will exhibit yield strengths as high as 1700 Mpa and ultimate tensile strengths as high as 1750 Mpa after aging, with elongation percentages of 3 percent or less in 50 mm. It is generally provided in thicknesses between 0.635 and 0.787 mm, and in widths of 25.4 mm. This product is most commonly used in the manufacture of television tubes and is currently available under proprietary trade names such as ''Durphynox 17.''[3]

Finally, three specialty stainless steels typically used in certain industrial blades and surgical and medical instruments are also excluded from the scope of this order. These include stainless steel strip in coils used in the production of textile cutting tools (e.g., carpet knives).[4] This steel is similar to ASTM grade 440F, but containing, by weight, 0.5 to 0.7 percent of molybdenum. The steel also contains, by weight, carbon of between 1.0 and 1.1 percent, sulfur of 0.020 percent or less, and includes between 0.20 and 0.30 percent copper and between 0.20 and 0.50 percent cobalt. This steel is sold under proprietary names such as ''GIN4 Mo.'' The second excluded stainless steel strip in coils is similar to AISI 420–J2 and contains, by weight, carbon of between 0.62 and 0.70 percent, silicon of between 0.20 and 0.50 percent, manganese of between 0.45 and 0.80 percent, phosphorus of no more than 0.025 percent and sulfur of no more than 0.020 percent. This steel has a carbide density on average of 100 carbide particles per square micron. An example of this product is ''GIN5'' steel.

[1] ''Arnokrome III''' is a trademark of the Arnold Engineering Company.

[2] ''Gilphy 36'' is a trademark of Imphy, S.A.

[3] ''Durphynox 17'' is a trademark of Imphy, S.A.

[4] This list of uses is illustrative and provided for descriptive purposes only.

The third specialty steel has a chemical composition similar to AISI 420 F, with carbon of between 0.37 and 0.43 percent, molybdenum of between 1.15 and 1.35 percent, but lower manganese of between 0.20 and 0.80 percent, phosphorus of no more than 0.025 percent, silicon of between 0.20 and 0.50 percent, and sulfur of no more than 0.020 percent. This product is supplied with a hardness of more than Hv 500 guaranteed after customer processing, and is supplied as, for example, ''GIN6.''[5]

Analysis of Comments Received

All issues raised in the case and rebuttal briefs by parties to this administrative review are addressed in the ''Issues and Decision Memorandum'' (Decision Memorandum) from Joseph A. Spetrini, Deputy Assistant Secretary for Import Administration to Faryar Shirzad, Assistant Secretary for Import Administration, dated February 11, 2002, which is hereby adopted by this notice. A list of the issues which parties have raised and to which we have responded, all of which are in the Decision Memorandum, is attached to this notice as an appendix. Parties can find a complete discussion of all issues raised in this review and the corresponding recommendations in this public memorandum which is on file in room B–099 of the main Department of Commerce building. In addition, a complete version of the Decision Memorandum can be accessed directly on the internet at www.ia.ita.doc.gov. The paper copy and electronic version of the Decision Memorandum are identical in content.

Changes Since the Preliminary Results

Based on our analysis of comments received, we have made changes in the margin calculations. The changes are listed below:

• We modified our adjustment of affiliated party inputs from the preliminary results and, for these final results, we are comparing the prices of nickel metal on a monthly basis.
• We have deducted indirect selling expenses incurred in the country of manufacture from U.S. price and in our calculation of CEP profit to account for all U.S. selling expenses.
• We have also corrected certain programming and clerical errors in our preliminary results, where applicable. Any alleged programming or errors with which we do not agree are discussed in the relevent sections of the Decision Memorandum, accessible in B–099 of the main Department of Commerce building and on the web at www.ia.ita.doc.gov.

Final Results of the Review

We determine the following percentage weighted–average margins exist for the period January 4, 1999 through June 30, 2000:

Manufacturer/ Exporter	Weighted Average Margin (percentage)
KTN	2.61

Liquidation

The Department shall determine, and U.S. Customs Service (Customs) shall assess, antidumping duties on all appropriate entries. In accordance with 19 CFR 351.212(b), we have calculated exporter/importer–specific assessment rates. With respect to constructed export price sales, we divided the total dumping margins for the reviewed sales by the the total entered value of thosed reviewed sales for each importer. We will direct Customs to assess the resulting percentage margin against the entered Customs values for the subject merchandise on each of the importer's entries under the relevant order during the POR.

Cash Deposit Requirements

The following deposit requirements will be effective upon publication of this notice of final results of administrative review for all shipments of stainless steel sheet and strip in coils from Germany entered, or withdrawn from warehouse, for consumption on or after the date of publication, as provided by section 751(a)(1) of the Tariff Act: (1) The cash deposit rate for the reviewed company will be the rate shown above; (2) for previously reviewed or investigated companies not listed above, the cash deposit rate will continue to be the company–specific rate published for the most recent period; (3) if the exporter is not a firm covered in this review, a prior review, or the original less–than–fair–value (LTFV) investigation, but the manufacturer is, the cash deposit rate will be the rate established for the most recent period for the manufacturer of the merchandise; and (4) the cash deposit rate for all other manufacturers or exporters will continue to be 13.48 percent. This rate is the ''All Others'' rate from the amended final determination in the LTFV investigations. See Stainless Steel Sheet and Strip in Coils From Germany: Notice of Court Decision and Suspension of Liquidation, 66 FR 57419 (November 15, 2001).

These deposit requirements shall remain in effect until publication of the final results of the next administrative review.

This notice also serves as a final reminder to importers of their responsibility under 19 CFR 351.402(f) to file a certificate regarding the reimbursement of antidumping or countervailing duties prior to liquidation of the relevant entries during this review period. Failure to comply with this requirement could result in the Secretary's presumption that reimbursement of antidumping or countervailing duties occurred and the subsequent assessment of doubled antidumping duties.

This notice also serves as a reminder to parties subject to administrative protective orders (APO) of their responsibility concerning the return or destruction of proprietary information disclosed under APO in accordance with 19 CFR 351.305. Timely written notification of the return or destruction of APO materials or conversion to judicial protective order is hereby requested. Failure to comply with the regulations and terms of an APO is a violation which is subject to sanction.

We are issuing and publishing this determination and notice in accordance with sections 751(a)(1) and 777(i) of the Tariff Act.

February 11, 2002

Faryar Shirzad,

Assistant Secretary for Import Administration.

APPENDIX

Comments and Responses

1.Use of Affiliated–Party Sales
2.Nickel Costs
3.Interest Expenses and Indirect Selling Expenses
4.Deduction of Home Market Indirect Selling Expenses from CEP
5.Clerical Errors

[FR Doc. 02–4088 Filed 2–19–02; 8:45 am]

BILLING CODE 3510–DS–S

[5] ''GIN4 Mo,'' ''GIN5' and ''GIN6' are the proprietary grades of Hitachi Metals America, Ltd.

DEPARTMENT OF COMMERCE

National Institute of Standards and Technology

Visiting Committee on Advanced Technology Meeting

ACTION: Notice of partially closed meeting—Visiting Committee on Advanced Technology.

SUMMARY: Pursuant to the Federal Advisory Committee Act, 5 U.S.C. app. 2, notice is hereby given that the Visiting Committee on Advanced

Technology, National Institute of Standards and Technology (NIST), will meet Tuesday, March 5, 2002, from 8:25 a.m. to 5:15 p.m. and Wednesday, March 6, 2002, from 8:15 a.m. to Noon. The Visiting Committee on Advanced Technology is composed of fourteen members appointed by the Director of NIST; who are eminent in such fields as business, research, new product development, engineering, labor, education, management consulting, environment, and international relations. The purpose of this meeting is to review and make recommendations regarding general policy for the Institute, its organization, its budget, and its programs within the framework of applicable national policies as set forth by the President and the Congress. The agenda will include a NIST Update, Grand Challenges—NIST 2010, ATP: Reforms to Strengthen the Program, Environmental Health and Safety at NIST, An Update on the National Quality Program, MSEL Cross-Cutting Interactions, and Human Resource Development. Discussions scheduled to begin at 3:45 p.m. end at 5:15 p.m. on March 5, 2002, and to begin at 8:15 a.m. and to end at Noon on March 6, 2002, on staffing of management positions at NIST, the NIST budget, including funding levels of the Advanced Technology Program and the Manufacturing Extension Partnership, and feedback sessions will be closed.

DATES: The meeting will convene March 5, 2002 at 8:25 a.m. and will adjourn at Noon on March 6, 2002.

ADDRESSES: The meeting will be held in the Employees Lounge, Administration Building, at NIST, Gaithersburg, Maryland.

FOR FURTHER INFORMATION CONTACT: Janet R. Russell, Administrative Coordinator, Visiting Committee on Advanced Technology, National Institute of Standards and Technology, Gaithersburg, MD 20899–1004, telephone number (301) 975–2107.

SUPPLEMENTARY INFORMATION: The Assistant Secretary for Administration, with the concurrence of the General Counsel, formally determined on January 16, 2002, that portions of the meeting of the Visiting Committee on Advanced Technology which involve discussion of proposed funding of the Advanced Technology Program and the Manufacturing Extension Partnership Program may be closed in accordance with 5 U.S.C. 552b(c)(9)(B), because those portions of the meetings will divulge matters the premature disclosure of which would be likely to significantly frustrate implementation of proposed agency actions; and that portions of meetings which involve discussion of the staffing issues of management and other positions at NIST may be closed in accordance with 5 U.S.C. 552b(c)(6), because divulging information discussed in those portions of the meetings is likely to reveal information of a personal nature where disclosure would constitute a clearly unwarranted invasion of personal privacy.

Dated: February 11, 2002.

Karen H. Brown,

Deputy Director.

[FR Doc. 02–4073 Filed 2–19–02; 8:45 am]

BILLING CODE 3510–CN–P

DEPARTMENT OF COMMERCE

National Institute of Standards and Technology

Announcing a Meeting of the Computer System Security And Privacy Advisory Board

AGENCY: National Institute of Standards and Technology, Commerce.

ACTION: Notice of meeting.

SUMMARY: Pursuant to the Federal Advisory Committee Act, 5 U.S.C. App., notice is hereby given that the Computer System Security and Privacy Advisory Board (CSSPAB) will meet Tuesday, March 5, 2002, from 9 a.m. until 5 p.m., Wednesday, March 6, 2002, from 9 a.m. until 5 p.m. and on Thursday, March 7, 2002, from 9 a.m. until 5 p.m. All sessions will be open to the public. The Advisory Board was established by the Computer Security Act of 1987 (Pub. L. 100–235) to advise the Secretary of Commerce and the Director of NIST on security and privacy issues pertaining to federal computer systems. Details regarding the Board's activities are available at *http://csrc.nist.gov/csspab/*.

DATES: The meetings will be held on March 5, 6, and 7, 2002, from 9 a.m. until 5 p.m.

ADDRESSES: The meetings will take place at the General Services Administration, 7th and D Streets, SW., Room 5700, in Washington, DC.

Agenda

—Welcome and Overview
—Session on Minimally-Accepted Security Controls
—Updates on Recent Computer Security Legislation
—Update by OMB on Privacy and Security Issues
—Briefing on Activities Related to Executive Order on Critical Infrastructure Protection
—Briefing on U.S. Postal Service Electronic Postmark Products and Certificate Authority Effort
—Review of CSSPAB Work Plan Priorities for 2002 and Beyond
—Public Participation
—Agenda Development for June 2002 CSSPAB meeting
—Wrap-Up

Note that agenda items may change without notice because of possible unexpected schedule conflicts of presenters.

Public Participation

The Board agenda will include a period of time, not to exceed thirty minutes, for oral comments and questions from the public. Each speaker will be limited to five minutes. Members of the public who are interested in speaking are asked to contact the Board Secretariat at the telephone number indicated below. In addition, written statements are invited and may be submitted to the Board at any time. Written statements should be directed to the CSSPAB Secretariat, Information Technology Laboratory, 100 Bureau Drive, Stop 8930, National Institute of Standards and Technology, Gaithersburg, MD 20899–8930. It would be appreciated if 35 copies of written material were submitted for distribution to the Board and attendees no later than March 1, 2002. Approximately 15 seats will be available for the public and media.

FOR FURTHER INFORMATION CONTACT: Dr. Fran Nielsen, Board Secretariat, Information Technology Laboratory, National Institute of Standards and Technology, 100 Bureau Drive, Stop 8930, Gaithersburg, MD 20899–8930, telephone: (301) 975–3669.

Dated: February 14, 2002.

Karen H. Brown,

Acting Director, NIST.

[FR Doc. 02–4075 Filed 2–19–02; 8:45 am]

BILLING CODE 3510–CN–P

DEPARTMENT OF COMMERCE

National Institute of Standards and Technology

International Code Council: The Update Process for the International Codes and Standards

AGENCY: National Institute of Standards and Technology, Commerce.

ACTION: Notice.

SUMMARY: The International Code Council (ICC), promulgator of the International Codes and Standards, maintains a process for updating the entire family of International Codes

based on receipt of proposals from interested individuals and organizations involved in the construction industry as well as the general public. The codes are updated every three years (2000—current edition, 2003, 2006 editions, etc.) with an intervening Supplement published every 18 months. There are two hearings for each code development cycle: In the first, a committee considers proposals and recommends an action on each; in the second, the committee considers comments submitted in response to the committee actions. The schedule is printed below.

The purpose of this request is to increase public participation in the system used by ICC to develop and maintain its codes and standards. The publication of this notice by the National Institute of Standards and Technology (NIST) on behalf of ICC is undertaken as a public service; NIST does not necessarily endorse, approve, or recommend any of the codes or standards referenced in the notice.

DATES: Interested persons may submit proposals to the ICC at the address shown below and may participate in the public debate concerning these matters. The hearing dates are as follows:

Cycle year	Submittal deadline	Public hearings
2002	November 15, 2001	First Hearing, April 8–19, 2002, Radisson Hotel Green Tree, Pittsburgh, PA 800–333–3333. Second Hearing, September 29–October 4, 2002, Fort Worth Convention Center, Fort Worth, TX.
Completion of this cycle results in the 2003 edition.		
2003	February 15, 2003	First Hearing, September 5–14, 2003, Opryland Hotel, Nashville, TN. Second Hearing, May, 2004, Date/Location TBD.
Completion of this cycle results in the 2004 Supplement.		
2004	August 15, 2004 (tentative)	First Hearing, February 21–March 2, 2005, Cincinnati Convention Center, Cincinnati, OH. Second Hearing, September, 2005, Date/Location TBD.

Completion of this cycle results in the 2006 edition. The 3-year cycle continues as noted above.

Updates to the schedule are posted on the ICC website at: *www.intlcode.org.*

FOR FURTHER INFORMATION CONTACT: Mike Pfeiffer, PE, Secretary, Code Development, 4051 West Flossmoor Road, Country Club Hills, IL 60478 Telephone 708/799–2300 Extension 338.

SUPPLEMENTARY INFORMATION:

Background

ICC produces the only family of Codes and Standards that are comprehensive, coordinated and necessary to regulate the built environment. Federal agencies frequently use these codes and standards as the basis for developing Federal regulations concerning new and existing construction. The Code Development Process is initiated when proposals from interested persons, supported by written data, views, or arguments are solicited and published in the Proposed Changes document. This document is distributed a minimum of 30 days in advance of the first hearing and serves as the agenda. At the first hearing, the ICC Code Development Committee considers testimony on every proposal and acts on them individually (Approval, Disapproval, or Approval as Modified). The results are published in a report entitled the Report of the Public Hearing, which identifies the disposition of each proposal and the reason for the committee's action. Anyone wishing to submit a comment on the committee's action, expressing support or opposition to the action, is provided the opportunity to do so. Comments received are published and distributed in a document called the Final Action Agenda, which serves as the agenda for the second hearing. Proposals that are approved at the second hearing are incorporated in either the Supplement or Edition, as applicable, with the next cycle starting with the submittal deadline for proposals. Proponents of proposals automatically receive a copy of all documents (Proposed Changes, Report of the Public Hearing and Final Action Agenda).

Interested parties also may request a copy, free of charge, from ICC headquarters at:

International Code Council, 5203 Leesburg Pike, Suite 600, Falls Church, VA 22041–3401 or download a copy from the ICC web site at *www.intlcode.org.*

The International Codes and Standards consist of the following:

International Building Code
ICC Electrical Code
International Energy Conservation Code
International Existing Building Code
International Fire Code
International Fuel Gas Code
International Mechanical Code
ICC Performance Code for Buildings and Facilities
International Plumbing Code
International Private Sewage Disposal Code
International Property Maintenance Code
International Residential Code
International Urban-Wildland Interface Code
International Zoning Code
ICC/ANSI A 117.1 Accessible and Usable Buildings and Facilities
ICC Standard on Bleachers, Folding and Telescopic Seating and Grandstands

The maintenance process for ICC Standards such as ICC/ANSI A 117.1 and the ICC Standard on Bleachers, Folding and Telescopic Seating and Grandstands follows a similar process of soliciting proposals, committee action, public comment and ultimately the update and publication of the standard.

Dated: February 14, 2002.

Karen Brown,

Deputy Director.

[FR Doc. 02–4074 Filed 2–19–02; 8:45 am]

BILLING CODE 3510–CN–P

DEPARTMENT OF DEFENSE

Department of the Air Force

Notice of Issuance of Record of Decision Regarding Expansion of the Land Area of the Existing Hardwood Air-to-Surface Gunnery Range

AGENCY: Department of the Air Force, DoD.

ACTION: Notice of Record of Decision.

SUMMARY: The Air Force issued a Record of Decision (ROD) on February 8, 2002, to expand the land area of the existing Hardwood Air-to-Surface Gunnery Range. The decision supports high altitude restricted military training airspace, low altitude restricted military training airspace to match the land expansion area, and increase aircraft utilization in existing military operations area airspace in order to enhance combat readiness training. The ROD was issued in accordance with the Council on Environmental Quality's National Environmental Policy Act (NEPA) Regulations (40 CFR 1505.2). The ROD is based on information, analysis, and public comment contained in the Final Environmental Impact Statement, ''Hardwood Range Expansion and Associated Airspace Actions,'' November 2000 (**Federal Register** Volume 65, Number 242: December 15, 2000 [Page 78484–78485].

FOR FURTHER INFORMATION CONTACT: Harry Knudsen (301) 836–6295.

Pamela D. Fitzgerald,

Air Force Federal Register Liaison Officer.

[FR Doc. 02–4021 Filed 2–19–02; 8:45 am]

BILLING CODE 5001–05–U

DEPARTMENT OF EDUCATION

President's Advisory Commission on Educational Excellence for Hispanic Americans

AGENCY: President's Advisory Commission on Educational Excellence for Hispanic Americans, Department of Education.

ACTION: Notice of meeting.

SUMMARY: This notice sets forth the schedule and proposed agenda of a forthcoming meeting of the President's Advisory Commission on Educational Excellence for Hispanic Americans (Commission). This notice also describes the functions of the Commission. Notice of this meeting is required under Section 10(a)(2) of the Federal Advisory Committee Act and is intended to notify the public of their opportunity to attend.

DATE AND TIME: Thursday, February 28, 2002, 9 a.m. to 12 p.m.

ADDRESSES: The Commission meeting will be held in Washington, DC, at The Mayflower Hotel located at 1127 Connecticut Avenue, NW., Washington, DC 20036.

FOR FURTHER INFORMATION CONTACT: Leslie Sanchez, Executive Director, or Adam Chavarria, Associate Director, White House Initiative on Educational Excellence for Hispanic Americans, 400 Maryland Ave., SW., Washington, DC 20202, (202) 401–1411.

SUPPLEMENTARY INFORMATION: The President's Advisory Commission on Educational Excellence for Hispanic Americans is established under Executive Order 13230 dated October 12, 2001. The Commission is established to provide advice to the Secretary of Education (Secretary) and issue reports to the President concerning: (a) The progress of Hispanic Americans in closing the academic achievement gap and attaining the goals established by the President's No Child Left Behind Act of 2002; (b) the development, monitoring, and coordination of Federal efforts to promote high-quality education for Hispanic Americans; (c) ways to increase parental, State and local, private sector, and community involvement in improving education; and (d) ways to maximize the effectiveness of Federal education initiatives within the Hispanic community.

Individuals who will need accommodations for a disability in order to attend the meeting (*i.e.* interpreting services, assistive listening devices, materials in alternative format) should notify Adam Chavarria at (202) 401–1411 by no later than February 25. We will attempt to meet requests after this date, but cannot guarantee availability of the requested accommodation. The meeting site is accessible to individuals with disabilities.

On Wednesday, February 27th, the Commission will be briefed on a number of topics including Executive Order 13230, the No Child Left Behind Act of 2002, and the Federal Advisory Committee Act (FACA). The Commission will also be sworn in at the White House. The Commission's meeting on Wednesday is not subject to FACA because the meeting involves the exchange of facts and information.

On Thursday, the Commission will meet in open session from 9 a.m. to noon. The Commission will be discussing and planning upcoming meetings and events.

Records are kept of all Commission proceedings, and are available for public inspection at the office of the White House Initiative on Educational Excellence for Hispanic Americans from the hours of 9 a.m. to 5 p.m. This notice will not meet the 15-day FACA requirement for announcing meetings in the **Federal Register** due to scheduling issues.

Dated: February 14, 2002.

Laurie M. Rich,

Assistant Secretary, Office of Intergovernmental and Interagency Affairs.

[FR Doc. 02–4078 Filed 2–19–02; 8:45 am]

BILLING CODE 4000–01–M

DEPARTMENT OF ENERGY

[Docket No. EA–258]

Application to Export Electric Energy; Maclaren Energy Inc.

AGENCY: Office of Fossil Energy, DOE.

ACTION: Notice of application.

SUMMARY: Maclaren Energy Inc. (Maclaren) has applied for authority to transmit electric energy from the United States to Canada pursuant to section 202(e) of the Federal Power Act.

DATES: Comments, protests or requests to intervene must be submitted on or before March 22, 2002.

ADDRESSES: Comments, protests or requests to intervene should be addressed as follows: Office of Coal & Power Import/Export (FE–27), Office of Fossil Energy, U.S. Department of Energy, 1000 Independence Avenue, SW., Washington, DC 20585–0350 (FAX 202–287–5736).

FOR FURTHER INFORMATION CONTACT: Steven Mintz (Program Office) 202–586–9506 or Michael Skinker (Program Attorney) 202–586–2793.

SUPPLEMENTARY INFORMATION: Exports of electricity from the United States to a foreign country are regulated and require authorization under section 202(e) of the Federal Power Act (FPA) (16 U.S.C. 824a(e)).

On January 22, 2002, the Office of Fossil Energy (FE) of the Department of Energy (DOE) received an application from Maclaren to transmit electric energy from the United States to Canada. Maclare is a power marketer that is incorporated under the laws of Canada and is a wholly-owned subsidiary of Great Lakes Power Inc., a Canadian corporation, which has its principal place of business in Toronto, Ontario, Canada. Maclaren operates as a wholesale and retail marketer of electric power and arranges services in related

areas. Maclaren does not own or control any electric power generation or transmission facilities and does not have a franchised service area.

Maclaren proposes to arrange for the delivery of electric energy to Canada over the existing international transmission facilities owned by Basin Electric Power Cooperative, Bonneville Power Administration, Citizen Utilities, Eastern Maine Electric Cooperative, International Transmission Company, Joint Owners of the Highgate Project, Long Sault, Inc., Maine Electric Power Company, Maine Public Service Company, Minnesota Power Inc., Minnkota Power Cooperative, New York Power Authority, Niagara Mohawk Power Corporation, Northern States Power, and Vermont Electric Transmission Company. The construction, operation, maintenance, and connection of each of the international transmission facilities to be utilized by Maclaren, as more fully described in the application, has previously been authorized by a Presidential permit issued pursuant to Executive Order 10485, as amended.

Procedural Matters

Any person desiring to become a party to this proceeding or to be heard by filing comments or protests to this application should file a petition to intervene, comment or protest at the address provided above in accordance with §§ 385.211 or 385.214 of the FERC's Rules of Practice and Procedures (18 CFR 385.211, 385.214). Fifteen copies of each petition and protest should be filed with DOE on or before the date listed above.

Comments on the Maclaren application to export electric energy to Canada should be clearly marked with Docket EA–258. Additional copies are to be filed directly with Ginette Berthel, Maclaren Energy Inc., Legal Counsel and Corporate Secretary, 2 Montreal Road West, Masson-Angers, Quebec J8M 1K6.

A final decision will be made on this application after the environmental impacts have been evaluated pursuant to the National Environmental Policy Act of 1969, and a determination is made by the DOE that the proposed action will not adversely impact on the reliability of the U.S. electric power supply system.

Copies of this application will be made available, upon request, for public inspection and copying at the address provided above or by accessing the Fossil Energy Home Page at *http://www.fe.de.gov.* Upon reaching the Fossil Energy Home page, select ''Electricity Regulation,'' and then ''Pending Procedures'' from the options menus.

Issued in Washington, D.C., on February 13, 2002.

Anthony J. Como,

Deputy Director, Electric Power Regulation, Office of Coal & Power Import/Export, Office of Coal & Power Systems, Office of Fossil Energy.

[FR Doc. 02–4050 Filed 2–19–02; 8:45 am]

BILLING CODE 6450–01–P

DEPARTMENT OF ENERGY

National Nuclear Security Administration; Notice of Floodplain/Wetlands Involvement for the Disposition of the Omega West Reactor Vessel and Ancillary Structures at Los Alamos National Laboratory, Los Alamos, New Mexico

AGENCY: National Nuclear Security Administration, Office of Los Alamos Site Operation, Department of Energy.

ACTION: Notice of Floodplain Involvement.

SUMMARY: The Department of Energy's National Nuclear Security Administration, Office of Los Alamos Site Operations hereby provides notice for its proposal to decontaminate and demolish the Omega West Reactor vessel along with the remaining structures associated with the Omega Facility, and to remove the resulting waste from the Los Alamos canyon floodplain and out of the canyon bottom. The Omega Facility, located in Los Alamos Canyon at LANL in New Mexico, housed an old research reactor known as the Omega West Reactor (OWR). The OWR was shut down in 1992 and the fuel removed in 1994. The Facility, originally constructed in 1944, and its associated structures are of advanced age and not in a condition suitable for renovation or reapplication. Further, they are located within a potential flood pathway. There is no foreseeable future use for the Facility, which is eligible for inclusion in the National Register of Historic Places.

DATES: Written comments are due to the address below no later than March 7, 2002.

ADDRESSES: Written comments should be addressed to Jeff Robbins, U.S. Department of Energy, National Nuclear Security Administration, Albuquerque Operations Office, P.O. Box 5400, Albuquerque, New Mexico, 87185 or transmitted by E-mail via Internet to *jfrobbins@doeal.gov,* or by facsimile to (505) 284–7101.

FOR FURTHER INFORMATION CONTACT: Rich Nevarez, Document Manager, U.S. Department of Energy, Albuquerque Operations Office, ERD SC–1, PO Box 5400, Albuquerque, New Mexico 87185, Telephone (505) 845–5804, or transmitted by E-mail via Internet to *rnevarez@doeal.gov,* or by facsimile (505) 845–4239.

For Further Information on General DOE Floodplain Environmental Review Requirements, Contact: Carol M. Borgstrom, Director, office of NEPA Policy and Compliance (EH–42), U.S. Department of Energy, 1000 Independence Avenue, SW, Washington, DC 20585–0119, Telephone (202) 586–4600 or (800) 472–2756, facsimile (202) 586–7031.

SUPPLEMENTARY INFORMATION: In May 2000, the Cerro Grande Fire burned across the upper and mid-elevation zones of several watersheds, including the Los Alamos Canyon watershed. Several of the Omega Facility's small support buildings and structures were demolished and disposed of during the first 6 months post Cerro Grande Fire. The remaining buildings, including Building 2–1 that houses the OWR vessel, and the associated structures and utilities and infrastructure, continue to be vulnerable to damage from flooding and mudflows as a result of the fire and the changed environmental conditions upstream from the Facility. While all buildings are vulnerable, the support buildings and structures are especially at risk due to their construction characteristics. An assessment of the floodplain is being included in the Disposition of the Omega West Vessel and Ancillary Structures Environmental Assessment (EA).

According to the requirements of E.O. 11988—Floodplain Management and 10 CFR part 1022—Compliance with Floodplain Environmental Review Requirements, notice is given that NNSA is planning to decontaminate and demolish (D&D) the OWR vessel and the remaining Omega Facility structures located within Los Alamos Canyon at Los Alamos National Laboratory, Los Alamos, New Mexico.

The D&D activities would consist of characterization and removal of radiological and other potential contamination in all the structures and subsequent demolition of the structures; dismantlement of the reactor vessel; segregation, size reduction, packaging, transportation, and disposal of wastes; and removal of several feet of potentially contaminated soil from beneath the reactor vessel. The D&D of the entire Omega Facility is proposed to be conducted using a phased approach. For each individual structure, the initial phase would include the

characterization and planning of the work, followed by the decontamination effort, and lastly the demolition of the structure and disposal of resulting debris. Decontamination of the Omega Facility would include the removal of nonradiological and radiological contamination from building and structure surfaces throughout the Omega Facility. The extent of decontamination performed would be limited to those activities required to minimize radiological and hazardous material exposure to workers, the public, and the environment. This would involve mostly decontamination of the Omega Facility, its components and spot contamination of surrounding areas, buildings and structure components.

Once the Omega Facility has been decontaminated, the buildings, structures, foundations, and other facility components would be demolished. All building and structural materials would be removed from the canyon and sent to appropriate disposal sites. The buildings are not expected to be technically difficult to demolish and the resultant wastes can be handled, transported, and disposed of in accordance with standard LANL D&D procedures. The demolition of the OWR vessel and its concrete radiation shielding would generate high exposure rates in the room as the vessel is dismantled. Therefore, a safe method of demolition would be employed that would assure the involved workers could maintain their exposure limits below one rem per year. The OWR vessel and radiation shielding would be horizontally sectioned using diamond wire saws or other similar equipment for cutting the structure. The result cut sections would be packaged as appropriate, transported out of the canyon for eventual disposal.

An assessment of the floodplain effects is being included in the draft EA for the proposed disposition of the OWR vessel and associated structures, which is under preparation. After NNSA issues the assessment, a floodplain statement of findings will be published in the **Federal Register**.

Issued in Los Alamos, New Mexico on February 4, 2002.

Corey A. Cruz,

Acting Director, U.S. Department of Energy, National Nuclear Security Administration, Office of Los Alamos Site Operations.

[FR Doc. 02–4045 Filed 2–19–02; 8:45 am]

BILLING CODE 6450–01–P

DEPARTMENT OF ENERGY

National Energy Technology Laboratory; Notice of Availability of a Financial Assistance Solicitation

AGENCY: National Energy Technology Laboratory, Department of Energy (DOE).

ACTION: Notice of Availability of a Financial Assistance Solicitation.

SUMMARY: Notice is hereby given of the intent to issue Financial Assistance Solicitation No. DE–PS26–02NT15373 entitled ''Focused Research in Air Quality and Produced Water Management in Oil and Gas Exploration and Production.'' The Department of Energy (DOE) National Energy Technology Laboratory (NETL), on behalf of its National Petroleum Technology Office (NPTO), seeks applications for cost-shared research projects that address specific air quality or produced water management issues faced by the oil and gas industry. Applications will either address (1) solutions to air quality issues in emission control technology, monitoring technology or air modeling or (2) produced water management issues in low cost treatment technologies, beneficial use of produced water, or best management practices for handling, treatment and/or disposal. The goal is to provide solutions to issues that are limiting domestic on-shore or off-shore production while providing the same or higher levels of environmental protection.

DATES: The solicitation will be available on the DOE/NETL's Internet address at http://www.netl.doe.gov/business and on the ''Industry Interactive Procurement System'' (IIPS) webpage located at *http://e-center.doe.gov* on or about February 28, 2002.

FOR FURTHER INFORMATION CONTACT: Keith R. Miles, U.S. Department of Energy, National Energy Technology Laboratory, P.O. Box 10940, MS 921–107, Pittsburgh, PA 15236, E-mail Address: miles@netl.doe.gov, Telephone Number: 412–386–5984.

SUPPLEMENTARY INFORMATION: The Department of Energy (DOE) National Energy Technology Laboratory (NETL), on behalf of its National Petroleum Technology Office (NPTO), is soliciting applications for cost-shared research projects that address specific air quality or produced water management issues faced by the oil and gas industry. The goal is to provide solutions to issues that are limiting domestic on-shore or off-shore production while providing the same or higher levels of environmental protection.

The mission of the Department of Energy's Fossil Energy Oil Program is derived from the National need for increased oil production for national security, requirements for Federal Lands stewardship, and increased protection of the environment. The Oil and Gas Environmental Program supports those goals and the National Energy Policy goal of increasing domestic oil and gas production, by providing technologies and approaches that reduce the cost of effective environmental protection and by providing technologies and approaches that improve environmental protection.

The two areas of interest for this solicitation are:

(1) Air Quality

This area of interest is directed toward providing better tools to meet existing requirements as well as providing a more accurate assessment of the impacts of oil and gas activities on regional air quality. Applications in this area should address emissions control technologies for oil and gas E&P activities or address monitoring and modeling improvements that will provide more accurate assessments and predictions of the impacts of both current and future oil and gas activities on regional air quality. Applications in this area of interest should clearly demonstrate that the results of the project meet current legal and regulatory requirements or that the appropriate government agencies are appropriately involved with the project and support the project goals.

(2) Produced Water

This area of interest is directed toward reducing the cost of produced water management. Applications in this area should address lower cost treatment processes, economic beneficial use of produced water, or best management practices that reduce the overall cost of produced water handling. All applications should clearly describe how a successful project will result in cost savings to operators and the magnitude of those savings. Applications addressing beneficial use of produced water may address treatment technologies designed to meet certain use criteria or may address ecological and/or regulatory concerns that limit producers' options for managing produced water. If implementation of the results of the project are dependent upon approval or concurrence of one or more regulatory agencies, applications should clearly demonstrate that such agencies are appropriately involved with the project and support the project goals.

The goal of this solicitation is to provide solutions to issues that are limiting domestic on-shore or off-shore production while providing the same or higher levels of environmental protection. These air quality and produced water management issues are limiting domestic production by restricting additional development or by adding costs that cause operators to abandon existing wells while substantial recoverable reserves remain in the ground.

The issues listed above are multi-faceted problems. In many cases, the overall solution may vary by region or may require several separate steps to resolve completely. Selected projects are expected to describe the overall problem and the region or regions affected as well as describing how the proposed project fits into the overall solution. Selected projects are also expected to describe as completely as possible the impact that the project will have on increasing or maintaining domestic production. The description of the production impact should discuss in detail the resource affected and the amount of domestic production that can be added or maintained as a result of the successful completion of the project.

DOE anticipates awarding approximately three (3) to seven (7) financial assistance (i.e., Cooperative Agreements) with a project performance period no less than one year in length and up to three years in length. Approximately $7.0 million of DOE funding is planned over a 3-year period for this solicitation. DOE has determined the minimum cost share of twenty percent (20%) of the total estimated project cost is required; details of the cost sharing requirement and the specific funding levels will be contained in the program solicitation.

This solicitation will be targeted for unrestricted competition. However, applications submitted by or on behalf of (1) another Federal agency; (2) a Federally Funded Research and Development Center sponsored by another Federal agency; or (3) a Department of Energy (DOE) Management Operating (M&O) contractor will not be eligible for award under this solicitation. However, an application that includes performance of a portion of the work by a DOE M&O contractor will be evaluated and may be considered for award subject to the provisions to be set forth in Program Solicitation DE–PS26–02NT15373.

Note: The limit on participation by an M&O contractor for an individual project under this solicitation cannot exceed 25% of the total project cost.

Once released, the solicitation will be available for downloading from the IIPS Internet page. At this Internet site you will also be able to register with IIPS, enabling you to submit an application. If you need technical assistance in registering or for any other IIPS function, call the IIPS Help Desk at (800) 683–0751 or E-mail the Help Desk personnel at *IIPS—HelpDesk@e-center.doe.gov.* The solicitation will only be made available in IIPS, no hard (paper) copies of the solicitation and related documents will be made available.

Prospective applicants who would like to be notified as soon as the solicitation is available should subscribe to the Business Alert Mailing List at http://www.netl.doe.gov/business. Once you subscribe, you will receive an announcement by E-mail that the solicitation has been released to the public. Telephone requests, written requests, E-mail requests, or facsimile requests for a copy of the solicitation package will not be accepted and/or honored. Applications must be prepared and submitted in accordance with the instructions and forms contained in the solicitation. The actual solicitation document will allow for requests for explanation and/or interpretation.

Issued in Pittsburgh, PA on February 5, 2002.

Dale A. Siciliano,

Deputy Director, Acquisition and Assistance Division.

[FR Doc. 02–4044 Filed 2–19–02; 8:45 am]

BILLING CODE 6450–01–P

DEPARTMENT OF ENERGY

[Number DE–PS36–02GO92005]

Million Solar Roofs Initiative Small Grant Program For State And Local Partnerships

AGENCY: Golden Field Office, Department of Energy.

ACTION: Notice of issuance of solicitation for financial assistance applications.

SUMMARY: The U.S. Department of Energy (DOE), pursuant to the DOE Financial Assistance Rules, 10 CFR 600.8, is announcing its intention to solicit applications from State and Local Partnerships under the Million Solar Roofs (MSR) Program. DOE's Office of Energy Efficiency and Renewable Energy will consider proposals from interested State and Local Partnerships to help fund their MSR program development and implementation activities. Applications from State Partnerships are encouraged to apply under the MSR Small Grant Program for State Partnerships. For information on the MSR Small Grant Program for State Partnerships, refer to the State Energy Programs Solicitation for Fiscal Year 2002 Special Projects at *http://www.eren.doe.gov/buildings/state_energy/corner_cafe/special_projects.html.* The MSR Small Grant Program for State Partnerships is Section 6.57 of the downloadable PDF Special Projects Solicitation.

DATES: The solicitation will be issued mid February 2002.

ADDRESSES: A copy of the solicitation will be accessible through the Golden Field Office Home Page at *http://www.golden.doe.gov/businessopportunities.html* under ''Solicitations.'' The Golden Home Page will provide direct access to the solicitation and provide instructions on using the DOE Industry Interactive Procurement System (IIPS) web site. The solicitation can also be obtained directly through IIPS at *http://e-center.doe.gov/* by browsing opportunities by Program Office for those solicitations issued by the Golden Field Office. DOE will not issue hard copies of the solicitation.

FOR FURTHER INFORMATION CONTACT: James McDermott, Contract Specialist, at 303–275–4732 or electronically at *jim_mcdermott@nrel.gov.* Responses to questions will be made by Amendment to the Solicitation and posted on the DOE IIPS website.

SUPPLEMENTARY INFORMATION: The Department of Energy's MSR Initiative is an initiative to support State and Local Partnerships who agree to install solar energy systems on one million buildings in the United States (U.S.) by 2010. This effort includes two types of solar energy technology: (1) solar electric (photovoltaic) systems that produce electricity from sunlight, and (2) solar thermal systems panels that produce heat for domestic hot water, for space heating or for heating swimming pools. The Partnerships bring together business, government and community organizations at the regional level with a commitment to install a pre-determined number (at least 500) of solar energy systems.

There were fifty-seven such existing partnerships under the MSR Initiative, as of October 1, 2001. They received their MSR Partnership designation by writing a letter of commitment to DOE with their goal for actual installations by 2010. In return, DOE provides access to: training and technical assistance from DOE; recognition, outreach tools, support; and opportunities to interface with other partnerships, solar energy

businesses, associations and related industries that can provide assistance (via national and regional Million Solar Roofs meetings). New MSR Partnerships can declare their intent to join the Initiative by including such a letter with their application for this solicitation. A complete description of partnerships and their representative activities can be found on the MSR website at *http://www.MillionSolarRoofs.org.*

Applications under the solicitation must further the work of State and Local Partnerships, including partners in the building industry, state and local governments, utilities, the solar energy industry, financial institutions and non-governmental organizations, to remove market barriers to solar energy use and to develop and strengthen local demand for solar energy products and applications. There are two types of grants available: Phase 1—New Partnership grants, and Phase 2—Meeting the Commitment grants. Only one application may be submitted per partnership in one or the other of the categories, but not both. Partnerships that have been awarded prior MSR partnership grants in the past may not apply for a Phase 1—New Partnership grant. Newly formed or existing partnerships that have not received prior MSR grants may apply for a Phase 1—New Partnership grant. Any partnership with the prerequisites may apply for a Phase 2—Meeting the Commitment grant.

The project or activity must be conducted in a designated MSR State and Local Partnership area. There is no cost sharing requirement for these grants, although cost sharing will be one of the criteria considered. Subject to the availability of funds, multiple awards for a total of $1,000,000 (DOE funding) in Fiscal Year 2002 are anticipated as a result of this Solicitation. The selected applicants will receive financial assistance under a grant. DOE will fund up to $50,000 per project. DOE anticipates funding approximately 20 to 30 grants in the amount of $10,000 to $50,000 each.

Solicitation number DE–PS36–02GO92005 will include complete information on the program, including technical aspects, funding, application preparation instructions, application evaluation criteria, and other factors that will be considered when selecting applications for funding. No pre-application conference is planned. Issuance of the solicitation is planned for mid February 2002, with applications due 45 days after the solicitation has been issued.

Issued in Golden, Colorado, on February 11, 2002.

Jerry L. Zimmer,

Director, Office of Acquisition and Financial Assistance.

[FR Doc. 02–4046 Filed 2–19–02; 8:45 am]

BILLING CODE 6450–01–P

DEPARTMENT OF ENERGY

[Number DE–PS36–02GO92006]

Renewable Energy Development On Tribal Lands

AGENCY: Golden Field Office, Department of Energy.

ACTION: Notice of issuance of solicitation for financial assistance applications.

SUMMARY: The U.S. Department of Energy (DOE), pursuant to the DOE Financial Assistance Rules, 10 CFR 600.8, is announcing its intention to solicit applications for the development of renewable energy on Tribal lands. Through cooperative agreements, DOE intends to provide financial support to conduct feasibility studies and share in the cost of implementing sustainable renewable energy installations on Tribal lands. Under the solicitation, DOE is soliciting Applications from Federally-recognized Tribes or Alaskan Native Corporations (hereafter referred to as ''Tribes'') to either: (1) conduct feasibility studies for the development of economically sustainable renewable energy installations on Tribal Lands; or (2) implement sustainable renewable energy development projects.

DATES: Issuance of the solicitation is planned for the end of February 2002.

ADDRESSES: A copy of the solicitation, once it is issued, will be accessible through the Golden Field Office Home Page at *http://www.golden.doe.gov/businessopportunities.html* under ''Solicitations.'' The Golden Home Page will provide direct access to the solicitation and provide instructions on using the DOE Industry Interactive Procurement System (IIPS) Web site. The solicitation can also be obtained directly through IIPS at http://e-center.doe.gov/ by browsing opportunities by Program Office for those solicitations issued by the Golden Field Office. DOE will not issue hard copies of the solicitation.

FOR FURTHER INFORMATION CONTACT: Ruth E. Adams, Contracting Officer, via facsimile at 303–275–4788 or electronically at *ruth_adams@nrel.gov.* Responses to questions will be made by amendment to the solicitation and posted on the DOE Industry Interactive Procurement System (IIPS) Web site.

SUPPLEMENTARY INFORMATION: DOE's Tribal Energy Program promotes tribal energy self-sufficiency and fosters employment and economic development on Tribal Lands through financial assistance to Native American Tribes and Alaskan Native Corporations for feasibility studies and renewable energy development projects. Under this solicitation, DOE will be soliciting Applications from Federally-recognized Tribes or Alaskan Native Corporations (hereafter referred to as ''Tribes'') to either: (1) conduct feasibility studies for the development of economically sustainable renewable energy installations on Tribal Lands; or (2) implement sustainable renewable energy development projects.

Eligible technologies under this solicitation include, but are not limited to the following: photovoltaic, concentrating solar power, solar thermal systems (*i.e.,* active or passive solar technologies for space or water heating, or power generation technologies), wind, biomass power, hydro, geothermal electric generation, geothermal resources for direct heating applications, and other renewable hybrid systems. Applications may include, but are not limited to, the use of renewable energy for: direct electrical generation, building uses, water pumping, or other grid connected or off-grid power uses.

DOE will only consider Applications from Federally-recognized Tribes on whose Tribal Lands the project will be located. Applications from a consortium of Tribes will be accepted but must be submitted by a single Tribe representing the consortium. A letter of commitment from an authorized representative of the Tribe (Chief, Governor, President, Chairperson or other representative able to commit the Tribe), as well as from each participating Tribe or project Participant, is required as a part of the Application. For Development Project Applications, a Tribal Council Resolution is preferable to a letter of commitment, but a letter of commitment accompanied by a plan and schedule to obtain a Resolution, will be accepted.

Awards under this solicitation will be cooperative agreements with terms of one to three years depending on the type and scope of the proposed project. Subject to funding availability, the total DOE funding available under this solicitation will be approximately $2,500,000. DOE anticipates selecting 10 to 15 Renewable Energy Feasibility Study Applications and 3 to 5 Renewable Energy Development Project Applications for negotiation toward Award. If funding is appropriated in the Government's Fiscal Year 2003 (October

1, 2002 through September 30, 2003), opportunities to apply for development projects as well as funding for additional feasibility studies will be provided.

No cost share is required in order to be considered for feasibility study awards under this solicitation. For development projects, a minimum cost share of 20% of total project costs is required to be considered for award. However, applicants that propose more than the required cost share will be given additional consideration in the selection process. All applicant cost sharing must come from non-Federal sources (*i.e.,* private, state or local Government, or any other sources that were not originally derived from Federal funds).

A pre-application conference will be held on March 20, 2002 from 8:00 a.m. to 12:00 noon at the Red Lion Hotel Denver Central, 4040 Quebec Street, Denver, Colorado 80216. For responses at the Pre-Application conference, potential Applicants should submit questions in writing by March 12, 2002. The solicitation will provide information on how to transmit questions. All interested parties are encouraged to attend the pre-application conference. To confirm your participation or obtain additional information, please contact the Solicitation Coordinator at (303) 275–4716 or via facsimile at (303) 275–4788. The pre-application conference is being held in conjunction with the Council of Energy Resource Tribes (CERT) Sustainability Conference. For additional information on the CERT Sustainability Conference to be held March 21–22, 2002 visit *http://www.certredearth.com/.*

Solicitation number DE–PS36–02GO92006 will include complete information including technical aspects, funding, application preparation instructions, evaluation criteria, and other factors that will be considered when selecting applications for funding. Issuance of the solicitation is planned for the end of February 2002, with applications due approximately 70 days after the solicitation has been issued.

Issued in Golden, Colorado, on February 11, 2002.

Jerry L. Zimmer,

Director, Office of Acquisition and Financial Assistance.

[FR Doc. 02–4047 Filed 2–19–02; 8:45 am]

BILLING CODE 6450–01–P

DEPARTMENT OF ENERGY

Office of Science Financial Assistance Program Notice 02–17: Fusion 2002 Summer Study, Snowmass Village, CO, Supplemental Travel Funding

AGENCY: U.S. Department of Energy (DOE).

ACTION: Correction.

In notice document 02–2712 on page 5277, in the issue of Tuesday, February 5, 2002, please make the following corrections:

On page 5277, in the first column, under the heading ''Summary'', in the last line (line 15) the dollar amount should read $200,000.

The Web sites for the Fusion 2002 Summer Study and the Snowmass working groups have both changed. On page 5277, under the heading ''Supplementary Information'', in the second column, at the end of the second full paragraph (line 18) the Web site address should read *http://web.gat.com/snowmass/.* Also under the same heading, second column, third full paragraph, on line 13 the Web site should read *http://web.gat.com/snowmass/working/.*

Issued in Washington, DC on February 11, 2002.

John Rodney Clark,

Associate Director of Science for Resource Management.

[FR Doc. 02–4048 Filed 2–19–02; 8:45 am]

BILLING CODE 6450–02–P

DEPARTMENT OF ENERGY

Environmental Management Site-Specific Advisory Board, Rocky Flats

AGENCY: Department of Energy.

ACTION: Notice of open meeting.

SUMMARY: This notice announces a meeting of the Environmental Management Site-Specific Advisory Board (EM SSAB), Rocky Flats. The Federal Advisory Committee Act (Pub. L. 92–463, 86 Stat. 770) requires that public notice of these meeting be announced in the **Federal Register**.

DATES: Thursday, March 7, 2002, 6 p.m. to 9:30 p.m.

ADDRESSES: Jefferson County Airport Terminal Building, Mount Evans Room, 11755 Airport Way, Broomfield, CO.

FOR FURTHER INFORMATION CONTACT: Ken Korkia, Board/Staff Coordinator, Rocky Flats Citizens Advisory Board, 9035 North Wadsworth Parkway, Suite 2250, Westminster, CO, 80021; telephone (303) 420–7855; fax (303) 420–7579.

SUPPLEMENTARY INFORMATION: *Purpose of the Board:* The purpose of the Board is to make recommendations to DOE and its regulators in the areas of environmental restoration, waste management, and related activities.

Tentative Agenda

1. Quarterly update by representative from the Defense Nuclear Facilities Safety Board

2. Introduction to basic Rocky Flats site geology and hydrology

3. Presentation and discussion on surface soil and surface water contamination

4. Consideration of SSAB Groundwater Workshop final statements

5. Other Board business may be conducted as necessary

Public Participation: The meeting is open to the public. Written statements may be filed with the Board either before or after the meeting. Individuals who wish to make oral statements pertaining to agenda items should contact Ken Korkia at the address or telephone number listed above. Requests must be received at least five days prior to the meeting and reasonable provisions will be made to include the presentation in the agenda. The Deputy Designated Federal Officer is empowered to conduct the meeting in a fashion that will facilitate the orderly conduct of business. Each individual wishing to make public comment will be provided a maximum of five minutes to present their comments.

Minutes: The minutes of this meeting will be available for public review and copying at the Public Reading Room located at the Office of the Rocky Flats Citizens Advisory Board, 9035 North Wadsworth Parkway, Suite 2250, Westminister, CO 80021; telephone (303) 420–7855. Hours of operations for the Public Reading Room are 9 a.m. to 4 p.m., Monday–Friday, except Federal holidays. Minutes will also be made available by writing or calling Deb Thompson at the address or telephone number listed above.

Issued at Washington, DC on February 14, 2002.

Rachel M. Samuel,

Deputy Advisory Committee Management Officer.

[FR Doc. 02–4049 Filed 2–19–02; 8:45 am]

BILLING CODE 6450–01–P

DEPARTMENT OF ENERGY

Federal Energy Regulatory Commission

[Docket No. RP96–190–017]

Colorado Interstate Gas Company; Notice of Annual Revenue Report

February 13, 2002.

Take notice that on February 7, 2002, Colorado Interstate Gas Company (CIG) tendered for filing its final report detailing all negotiated rate revenues and interruptible storage revenue credits distributed for the period October 1, 2000 through September 30, 2001.

CIG states that copies of the filing has been served upon each person designated on the official service list compiled by the Commission's Secretary in this proceeding.

Any person desiring to protest said filing should file a protest with the Federal Energy Regulatory Commission, 888 First Street, NE, Washington, DC 20426, in accordance with section 385.211 of the Commission's Rules and Regulations. All such protests must be filed on or before February 20, 2002. Protests will be considered by the Commission in determining the appropriate action to be taken, but will not serve to make protestants parties to the proceedings. Copies of this filing are on file with the Commission and are available for public inspection. This filing may also be viewed on the Web at *http://www.ferc.gov* using the ''RIMS'' link, select ''Docket#'' and follow the instructions (call 202–208–2222 for assistance). Comments, protests and interventions may be filed electronically via the Internet in lieu of paper. See, 18 CFR 385.2001(a)(1)(iii) and the instructions on the Commission's Web site under the ''e-Filing'' link.

Linwood A. Watson, Jr.,

Deputy Secretary.

[FR Doc. 02–4039 Filed 2–19–02; 8:45 am]

BILLING CODE 6717–01–P

DEPARTMENT OF ENERGY

Federal Energy Regulatory Commission

[Docket No. ER01–2104–000, ER01–2104–001]

Maclaren Energy, Inc.; Notice of Issuance of Order

February 13, 2002.

Maclaren Energy, Inc. (Maclaren) submitted for filing a rate schedule under which Maclaren will engage in wholesale electric power and energy transactions at market-based rates. Maclaren also requested waiver of various Commission regulations. In particular, Maclaren requested that the Commission grant blanket approval under 18 CFR part 34 of all future issuances of securities and assumptions of liability by Maclaren.

On August 27, 2001, pursuant to delegated authority, the Director, Office of Markets, Tariffs and Rates-East, granted requests for blanket approval under Part 34, subject to the following:

Any person desiring to be heard or to protest the blanket approval of issuances of securities or assumptions of liability by Maclaren should file a motion to intervene or protest with the Federal Energy Regulatory Commission, 888 First Street, NE, Washington, DC 20426, in accordance with Rules 211 and 214 of the Commission's Rules of Practice and Procedure (18 CFR 385.211 and 385.214).

Absent a request to be heard in opposition within this period, Maclaren is authorized to issue securities and assume obligations or liabilities as a guarantor, indorser, surety, or otherwise in respect of any security of another person; provided that such issuance or assumption is for some lawful object within the corporate purposes of Maclaren, compatible with the public interest, and is reasonably necessary or appropriate for such purposes.

The Commission reserves the right to require a further showing that neither public nor private interests will be adversely affected by continued approval of Maclaren's issuances of securities or assumptions of liability.

Notice is hereby given that the deadline for filing motions to intervene or protests, as set forth above, is February 25, 2002.

Copies of the full text of the Order are available from the Commission's Public Reference Branch, 888 First Street, NE, Washington, DC 20426. The Order may also be viewed on the Internet at *http://www.ferc.fed.us/online/rims.htm* (call 202–208–2222 for assistance). Comments, protests, and interventions may be filed electronically via the Internet in lieu of paper. See, 18 CFR 385.2001(a)(1)(iii) and the instructions on the Commission's Web site at *http://www.ferc.fed.us/efi/doorbell.htm.*

Magalie R. Salas,

Secretary.

[FR Doc. 02–4036 Filed 2–19–02; 8:45 am]

BILLING CODE 6717–01–P

DEPARTMENT OF ENERGY

Federal Energy Regulatory Commission

[Docket No. RP02–152–001]

Mississippi River Transmission Corporation; Notice of Proposed Changes in FERC Gas Tariff

February 13, 2002.

Take notice that on February 7, 2002, Mississippi River Transmission Corporation (MRT) tendered for filing as part of its FERC Gas Tariff, Fifth Revised Volume No. 1, the following revised tariff sheets to be effective as follows:

To be effective October 1, 2001

Substitute Fifteenth Revised Sheet No. 8

To be effective November 1, 2001

Sixteenth Revised Sheet No. 8

MRT states that the purpose of this filing is to correct an administrative error and reflect the correct storage Fuel Use and Loss Percentage effective on October 1, 2001 and November 1, 2001.

Any person desiring to protest said filing should file a protest with the Federal Energy Regulatory Commission, 888 First Street, NE, Washington, DC 20426, in accordance with Section 385.211 of the Commission's Rules and Regulations. All such protests must be filed in accordance with Section 154.210 of the Commission's Regulations. Protests will be considered by the Commission in determining the appropriate action to be taken, but will not serve to make protestants parties to the proceedings. Copies of this filing are on file with the Commission and are available for public inspection. This filing may also be viewed on the Web at *http://www.ferc.gov* using the ''RIMS'' link, select ''Docket#'' and follow the instructions (call 202–208–2222 for assistance). Comments, protests and interventions may be filed electronically via the Internet in lieu of paper. See, 18 CFR 385.2001(a)(1)(iii) and the instructions on the Commission's Web site under the ''e-Filing'' link.

Linwood A. Watson, Jr.,

Deputy Secretary.

[FR Doc. 02–4041 Filed 2–19–02; 8:45 am]

BILLING CODE 6717–01–P

DEPARTMENT OF ENERGY

Federal Energy Regulatory Commission

[Docket No. RP02–13–001]

Portland Natural Gas Transmission System; Notice of Compliance Filing

February 13, 2002.

Take notice that on November 19, 2001, Portland Natural Gas Transmission System (Portland) submits an informational filing to comply with the Commission's Order Accepting and Suspending Tariff Sheet Subject to Refund and Conditions and Establishing a Hearing (October 31 suspension order).[1] The October 31 suspension order stated that Portland does not provide work paper support for its derivation of the seasonal FT rate of $89.1936 per Dth and, therefore, the Commission directed Portland to file such rate derivative support for the seasonal long-term firm rate.

Portland states that copies of this filing are being served on all jurisdictional customers, applicable state commissions, and interested parties that have requested service.

Any person desiring to protest said filing should file a protest with the Federal Energy Regulatory Commission, 888 First Street, NE, Washington, DC 20426, in accordance with section 385.211 of the Commission's Rules and Regulations. All such protests must be filed on or before February 20, 2002. Protests will be considered by the Commission in determining the appropriate action to be taken, but will not serve to make protestants parties to the proceedings. Copies of this filing are on file with the Commission and are available for public inspection. This filing may also be viewed on the Web at *http://www.ferc.gov* using the ''RIMS'' link, select ''Docket#'' and follow the instructions (call 202–208–2222 for assistance). Comments, protests and interventions may be filed electronically via the Internet in lieu of paper. See, 18 CFR 385.2001(a)(1)(iii) and the instructions on the Commission's Web site under the ''e-Filing'' link.

Linwood A. Watson, Jr.,

Deputy Secretary.

[FR Doc. 02–4040 Filed 2–19–02; 8:45 am]

BILLING CODE 6717–01–P

[1] 97 FERC ¶ 61,131 (2001).

DEPARTMENT OF ENERGY

Federal Energy Regulatory Commission

[Docket No. EL02–56–000]

Public Utility District No. 1 of Snohomish County, Washington, Complainant, v. Morgan Stanley Capital Group, Inc., Respondent; Notice of Complaint

February 13, 2002.

Take notice that on February 11, 2002, Public Utility District No. 1 of Snohomish County, Washington (Snohomish) filed a complaint with the Federal Energy Regulatory Commission (Commission) requesting that the Commission mitigate unjust and unreasonable terms and conditions contained in the long-term power supply contract between Snohomish and Morgan Stanley Capital Group (Seller) which was executed in January 2001 for service commencing on April 1, 2001.

Copies of the complaint were served on Seller.

Snohomish has requested privileged treatment of certain information in the complaint, and has filed privileged and public copies of the complaint, a request for privileged treatment, and a protective agreement.

Any person desiring to be heard or to protest this filing should file a motion to intervene or protest with the Federal Energy Regulatory Commission, 888 First Street, NE, Washington, DC 20426, in accordance with Rules 211 and 214 of the Commission's Rules of Practice and Procedure (18 CFR 385.211 and 385.214). All such motions or protests must be filed on or before March 4, 2002. Protests will be considered by the Commission in determining the appropriate action to be taken, but will not serve to make protestants parties to the proceeding. Any person wishing to become a party must file a motion to intervene. Answers to the complaint shall also be due on or before March 4, 2002. Copies of this filing are on file with the Commission and are available for public inspection. This filing may also be viewed on the Web at *http://www.ferc.gov* using the ''RIMS'' link, select ''Docket#'' and follow the instructions (call 202–208–2222 for assistance). Comments, protests, interventions and answers may be filed electronically via the Internet in lieu of paper. See, 18 CFR 385.2001(a)(1)(iii) and the instructions on the Commission's Web site under the ''e-Filing'' link.

Linwood A. Watson, Jr.,

Deputy Secretary.

[FR Doc. 02–4035 Filed 2–19–02; 8:45 am]

BILLING CODE 6717–01–P

DEPARTMENT OF ENERGY

Federal Energy Regulatory Commission

[Docket No. CP02–80–000]

Reliant Energy Gas Transmission Company; Notice of Application

February 13, 2002.

Take notice that on February 4, 2002, Reliant Energy Gas Transmission Company (REGT), whose main office is located at 1111 Louisiana Street, Houston, Texas 77210, filed in Docket No. CP02–80–000, an application requesting authorization to construct, own and operate mainline compression facilities and appurtenances located in Arkansas, pursuant to section 7(c) of the Natural Gas Act (NGA), as amended, and part 157 of the Commission's Rules and Regulations, all as more fully set forth in the application which is on file with the Commission and open to public inspection. Copies of this filing are on file with the Commission and are available for public inspection. This filing may also be viewed on the Web at *http://www.ferc.gov* using the ''RIMS'' link, select ''Docket #'' and follow the instructions (call 202–208–2222 for assistance).

Specifically, REGT states that it proposes to construct, own, and operate a 4,740 horsepower compressor station and appurtenant facilities on its Line J system in Jackson County, Arkansas which, upon completion, will enable firm transportation service by REGT to a new electric generating plant being constructed by TPS Dell, LLC (Dell). REGT states that the total construction costs are estimated to be $7.8 million.

REGT states that Dell has requested that firm service commence by October 1, 2002, and REGT requests Commission authorization be granted by June 1, 2002 to enable REGT to commence construction by July 1, 2002 to meet Dell's requested in service date.

Any questions concerning this application may be directed to Lawrence O. Thomas, Director, Rates and Regulatory, Reliant Energy Gas Transmission, PO Box 21734, Shreveport, Louisiana 71151, call (318) 429–2804, fax (318) 429–3133.

There are two ways to become involved in the Commission's review of

this project. First, any person wishing to obtain legal status by becoming a party to the proceedings for this project should, on or before March 6, 2002, file with the Federal Energy Regulatory Commission, 888 First Street, NE, Washington, DC 20426, a motion to intervene in accordance with the requirements of the Commission's Rules of Practice and Procedure (18 CFR 385.214 or 385.211) and the Regulations under the NGA (18 CFR 157.10). A person obtaining party status will be placed on the service list maintained by the Secretary of the Commission and will receive copies of all documents filed by the applicant and by all other parties. A party must submit 14 copies of filings made with the Commission and must mail a copy to the applicant and to every other party in the proceeding. Only parties to the proceeding can ask for court review of Commission orders in the proceeding.

However, a person does not have to intervene in order to have comments considered. The second way to participate is by filing with the Secretary of the Commission, as soon as possible, an original and two copies of comments in support of or in opposition to this project. The Commission will consider these comments in determining the appropriate action to be taken, but the filing of a comment alone will not serve to make the filer a party to the proceeding. The Commission's rules require that persons filing comments in opposition to the project provide copies of their protests only to the party or parties directly involved in the protest.

Persons who wish to comment only on the environmental review of this project should submit an original and two copies of their comments to the Secretary of the Commission. Environmental commenters will be placed on the Commission's environmental mailing list, will receive copies of the environmental documents, and will be notified of meetings associated with the Commission's environmental review process. Environmental commenters will not be required to serve copies of filed documents on all other parties. However, the non-party commenters will not receive copies of all documents filed by other parties or issued by the Commission (except for the mailing of environmental documents issued by the Commission) and will not have the right to seek court review of the Commission's final order.

Comments, protests and interventions may be filed electronically via the Internet in lieu of paper. See, 18 CFR 385.2001(a)(1)(iii) and the instructions on the Commission's Web site under the ''e-Filing'' link.

If the Commission decides to set the application for a formal hearing before an Administrative Law Judge, the Commission will issue another notice describing that process. At the end of the Commission's review process, a final Commission order approving or denying a certificate will be issued.

Linwood A. Watson, Jr.,

Deputy Secretary.

[FR Doc. 02–4034 Filed 2–19–02; 8:45 am]

BILLING CODE 6717–01–P

DEPARTMENT OF ENERGY

Federal Energy Regulatory Commission

[Docket No. EC02–15–001, et al.]

Cinergy Services, Inc., et al.; Electric Rate and Corporate Regulation Filings

February 12, 2002.

Take notice that the following filings have been made with the Commission. Any comments should be submitted in accordance with Standard Paragraph E at the end of this notice.

1. Cinergy Services, Inc.

[Docket Nos. EC02–15–001 and ER02–177–002]

Take notice that on February 8, 2002, Cinergy Services, Inc. (Cinergy) tendered for filing with the Federal Energy Regulatory Commission (Commission), an amendment to its applications filed in these proceedings on October 29, 2001. This was pursuant to the Commission's January 23, 2002, order issued in the above-captioned proceedings.

Comment Date: March 1, 2002.

2. Wisconsin Power & Light Company

[Docket No. ER02–977–000]

Take notice that on February 4, 2002, Wisconsin Power & Light Company (WPL) tendered for filing with the Federal Energy Regulatory Commission (Commission) new rates to be charged under its wholesale electric tariffs W–3A, PR–1, W–4A and DLM–1 to reflect the current cost of service incurred by WPL and its subsidiary South Beloit Water, Gas and Electric Company. WPL has asked that new interim rates become effective on April 22, 2002, and new final rates become effective concurrent with the Commission's final order in this proceeding. In addition WPL requests cancellation of its bundled wholesale electric tariffs W–1, W–3 and W–4.

A copy of this filing has been served upon the Illinois Commerce Commission, the Public Service Commission of Wisconsin and the WPL wholesale electric customers affected by this filing.

Comment Date: February 25, 2002.

3. Michigan Electric Transmission Company and Consumers Energy Company

[Docket ER02–424–001]

Take notice that on February 7, 2002, Consumers Energy Company (Consumers) and Michigan Electric Transmission Company (Michigan Transco) jointly filed a supplemental notice of succession to transfer previously overlooked rate schedules from Consumers to the Michigan Transco. The parties also submitted administrative agreements involving Wolverine Electric Cooperative, Inc. that allocate rights and responsibilities between Consumers and the Michigan Transco.

By acceptance letter dated January 23, 2002, that submittal was accepted by the Commission effective April, 2001, conditioned upon compliance with Order No. 614 within 15 days of the issuance of that acceptance letter. A Compliance Filing in the referenced docket, purporting to satisfy the aforementioned condition, was made by Consumers and Michigan Transco on February 7, 2002.

A full copy of the filing was served upon the Michigan Public Service Commission, and Wolverine Power Supply Cooperative, Inc., The City of Lansing, Board of Water and Light, and City of Grand Haven, Board of Light and Power.

Comment Date: February 28, 2002.

4. Calvert Cliffs Nuclear Power Plant, Inc.

[Docket No. ER02–445–001]

Take notice that on February 7, 2002, Calvert Cliffs Nuclear Power Plant, Inc. tendered for filing an amendment to a service agreement in compliance with Order No. 614 pursuant to the order issued in this docket on January 8, 2002. The January 8 Order accepted the amendment effective November 1, 2001 upon resubmission of the filing in compliance with Order No. 614.

Comment Date: February 28, 2002.

5. Delmarva Power & Light Company

[Docket No. ER02–797–001]

Take notice that on February 7, 2002, Delmarva Power & Light Company (Delmarva) tendered for filing a revised page 3 of an executed Interconnection Agreement between Delmarva and

Conectiv Delmarva Generation, Inc. (CDG). The revised page 3 eliminates references to a lease arrangement that no longer exists. Delmarva respectfully requests that the Commission allow the revised page 3 to become effective on January 23, 2002, the date on which Delmarva originally requested the Interconnection Agreement become effective.

Copies of the filing were served upon the Delaware Public Service Commission, the Maryland Public Service Commission and the Virginia State Corporation Commission.

Comment Date: February 28, 2002.

6. Alliant Energy Corporate Services, Inc.

[Docket No. ER02–975–000]

Take notice that on February 6, 2002, Alliant Energy Corporate Services, Inc., tendered for filing with the Federal Energy Regulatory Commission (Commission) four executed Service Agreements with Alliant Energy Corporate Services, Inc., establishing Alliant Energy Corporate Services, Inc., as a Long-Term Firm Transmission Customer under the terms of the Alliant Energy Corporate Services, Inc., Open Access Transmission Tariff.

Alliant Energy Corporate Services, Inc., requests effective dates of January 1, 2002, for service agreement with OASIS request numbers 853137, 969127, 969168 and 969198 and accordingly, seeks waiver of the Commission's notice requirement. A copy of this filing has been served upon the Illinois commerce commission, the Minnesota Public Utilities Commission, the Iowa Department of Commerce, and the Public Service Commission of Wisconsin.

Comment Date: February 27, 2002.

7. Alliant Energy Corporate Services, Inc.

[Docket No. ER02–979–000]

Take notice that on February 6, 2002, Alliant Energy Corporate Services, Inc., tendered for filing with the Federal Energy Regulatory Commission (Commission) an executed Service Agreement with GEN–SYS a Form of Service Agreement for Schedule 1 Service Associated With MAPP Schedule F.

Alliant Energy Corporate Services, Inc., requests an effective date of September 1, 2001, and accordingly, seeks waiver of the Commission's notice requirements. A copy of this filing has been served upon the Illinois Commerce Commission, the Minnesota Public Utilities Commission, the Iowa Department of Commerce, and the Public Service Commission of Wisconsin.

Comment Date: February 27, 2002.

8. Duke Energy Enterprise, LLC

[Docket No. ER02–984–000]

Take notice that on February 7, 2002, Duke Energy Enterprise, LLC (Duke Enterprise) tendered for filing pursuant to Section 205 of the Federal Power Act revisions to its proposed FERC Electric Tariff No. 1.

Duke Enterprise requests pursuant to Section 35.11 of the Commission's regulations that the Commission waive the 60-day minimum notice requirement under Section 35.3(a) of its regulations and grant an effective date for this application of February 8, 2002, the date on which Duke Enterprise anticipates commencing the sale of test energy.

Comment Date: February 28, 2002.

9. MidAmerican Energy Company

[Docket No. ER02–985–000]

Take notice that on February 7, 2002, MidAmerican Energy Company (MidAmerican), 401 Douglas Street, P. O. Box 778, Sioux City, Iowa 51102, filed with the Commission a Non-Firm Transmission Service Agreement with enXco, Inc., dated January 7, 2002, and entered into pursuant to MidAmerican's Open Access Transmission Tariff.

MidAmerican requests an effective date of January 7, 2002, for the Agreement and seeks a waiver of the Commission's notice requirement. MidAmerican has served a copy of the filing on the Iowa Utilities Board and enXco, Inc.

Comment Date: February 28, 2002.

10. PacifiCorp

[Docket No. ER02–986–000]

Take notice that on February 6, 2002, PacifiCorp, tendered for filing in accordance with 18 CFR 35 of the Commission's Rules and Regulations, Notice of Cancellation of Service Agreement No. 6 under PacifiCorp's FERC Electric Tariff, Volume No. 12, between PacifiCorp and Public Utility District No. 1 of Cowlitz County effective date April 28, 1997.

Copies of this filing were supplied to the Washington Utilities and Transportation Commission and the Public Utility Commission of Oregon and Public Utility District No. 1 of Cowlitz County .

Comment Date: February 28, 2002.

11. American Transmission Systems, Inc., Ohio Edison Company, The Cleveland Electric Illuminating Company, The Toledo Edison Company

[Docket No. ER02–987–000]

Take notice that on February 8, 2002, American Transmission Systems, Inc., tendered for filing on behalf of itself and Ohio Edison Company, The Cleveland Electric Illuminating Company, and The Toledo Edison Company, a Service Agreement for Network Integration Service and Operating Agreement for the Network Integration Transmission Service under the Ohio Retail Electric Program with The New Power Company pursuant to the America Transmission Systems, Inc. Open Access Tariff. This agreement will enable the party to obtain Network integration Service under the Ohio Retail Electric Program in accordance with the terms of the Tariff. The proposed effective date under this agreement is February 6, 2002.

Comment Date: March 1, 2002.

12. American Electric Power Service Corporation

[Docket No. ER02–988–000]

Take notice that on February 8, 2002, American Electric Power Service Corporation submitted for filing an executed ERCOT Generation Interconnection Agreement, dated January 11, 2002, between Central Power and Light Company (CPL) and E. I. du Pont de Nemours and Company. The agreement is pursuant to the AEP Companies' Open Access Transmission Service Tariff (OATT) that has been designated as the Operating Companies of the American Electric Power System FERC Electric Tariff Second Revised Volume No. 6, effective June 15, 2000.

CPL requests an effective date of January 12, 2002. Copies of CPL's filing have been served upon E. I. du Pont de Nemours and Company and the Public Utility Commission of Texas.

Comment Date: March 1, 2002.

13. Wisconsin Electric Power Company

[Docket No. ER02–989–000]

Take notice that on February 8, 2002, Service Agreement No. 31, effective December 20, 1995, under Wisconsin Electric Power Company's Coordination Sales Tariff, (FERC Electric Tariff Second Revised Volume 2) and Service Agreement No. 25 effective July 13, 1998, under Wisconsin Electric Power Company's Market Rate Sales Tariff, (FERC Electric Tariff Original Volume No. 8) are to be canceled as requested by the customer Entergy-Koch Trading.

Copies of the filing have been served on Entergy-Koch Trading, Michigan

Public Service Commission, and the Public Service Commission of Wisconsin.

Comment Date: March 1, 2002.

14. Wisconsin Electric Power Company

[Docket No. ER02–990–000]

Take notice that on February 8, 2002, Wisconsin Electric Power Company (Wisconsin Electric), tendered for filing an electric service agreement under its Market Rate Sales Tariff (FERC Electric Tariff, Original Volume No. 8) with IDACORP Energy L.P. Wisconsin Electric respectfully requests an effective date of February 1, 2002 to allow for economic transactions.

Wisconsin Electric requests waiver of any applicable notice requirements to allow for the requested effective date as specified. Copies of the filing have been served on IDACORP Energy, L.P., the Michigan Public Service Commission, and the Public Service Commission of Wisconsin.

Comment Date: March 1, 2002.

15. Virginia Electric and Power Company

[Docket No. ER02–991–000]

Take notice that on February 8, 2002, Virginia Electric and Power Company (the Company) respectfully tendered for filing the Service Agreement by Virginia Electric and Power Company to Allegheny Energy Supply Company, LLC designated as Service Agreement No. 11 under the Company's market-based rate tariff, FERC Electric Tariff, Original Volume No. 6, effective on June 15, 2001.

The Company requests an effective date of January 28, 2002, as requested by the customer. Copies of the filing were served upon Allegheny Energy Supply Company, LLC, the Virginia State Corporation Commission, and the North Carolina Utilities Commission.

Comment Date: March 1, 2002.

16. Commonwealth Edison Company

[Docket No. ER02–992–000]

Take notice that on February 8, 2002, Commonwealth Edison Company (ComEd) submitted for filing two Form of Service Agreements for Firm Point-To-Point Transmission Service (Service Agreements) and the corresponding Network Upgrade Agreement between ComEd and MidAmerican Energy Co. (MidAmerican) under the terms of ComEd's Open Access Transmission Tariff (OATT).

ComEd requests an effective date of February 1, 2002, and accordingly seeks waiver of the Commission's notice requirements. A copy of this filing was served on MidAmerican.

Comment Date: March 1, 2002.

17. Southwest Power Pool, Inc.

[Docket No. ER02–993–000]

Take notice that on February 8, 2002, Southwest Power Pool, Inc. (SPP) submitted for filing executed service agreements for Firm Point-to-Point Transmission Service and Non-Firm Point-To-Point Transmission Service with Mirant Americas Energy Marketing, LP (Mirant).

SPP seeks an effective date of January 19, 2002, for these service agreements. Mirant was served with a copy of this filing.

Comment Date: March 1, 2002.

18. Duke Energy Corporation

[Docket No. ER02–994–000]

Take notice that on February 8, 2002, Duke Energy Corporation filed an amendment to the Restated Interchange Agreement dated February 10, 1992 between Duke Power Company and South Carolina Public Service Authority.

Comment Date: March 1, 2002.

Standard Paragraph

E. Any person desiring to be heard or to protest such filing should file a motion to intervene or protest with the Federal Energy Regulatory Commission, 888 First Street, NE., Washington, DC 20426, in accordance with rules 211 and 214 of the Commission's rules of practice and procedure (18 CFR 385.211 and 385.214). All such motions or protests should be filed on or before the comment date. Protests will be considered by the Commission in determining the appropriate action to be taken, but will not serve to make protestants parties to the proceeding. Any person wishing to become a party must file a motion to intervene. Copies of this filing are on file with the Commission and are available for public inspection. This filing may also be viewed on the web at *http://www.ferc.gov* using the ''RIMS'' link, select ''Docket#'' and follow the instructions (call 202–208–2222 for assistance). Comments, protests and interventions may be filed electronically via the Internet in lieu of paper. See, 18 CFR 385.2001(a)(1)(iii) and the instructions on the Commission's web site under the ''e-Filing'' link.

Magalie R. Salas,

Secretary.

[FR Doc. 02–4032 Filed 2–19–02; 8:45 am]

BILLING CODE 6717–01–P

DEPARTMENT OF ENERGY

Federal Energy Regulatory Commission

[Docket No. CP02–60–000]

CMS Trunkline LNG Company, LLC.; Notice of Intent To Prepare an Environmental Assessment for the Proposed Trunkline LNG Expansion Project, Request for Comments on Environmental Issues, and Notice of Public Meeting

February 13, 2002.

The staff of the Federal Energy Regulatory Commission (FERC or Commission) will prepare an environmental assessment (EA) that will discuss the environmental impacts of CMS Trunkline LNG Company, LLC's (Trunkline LNG) Expansion Project involving construction and operation of facilities in Calcasieu Parish, Louisiana.[1] The project involves expanding the storage and sendout capacity of Trunkline LNG's existing, certificated liquefied natural gas (LNG) marine import terminal. This EA will be used by the Commission in its decision-making process to determine whether the project is in the public convenience and necessity.

Summary of the Proposed Project

Trunkline LNG proposes: (1) To expand the LNG storage capacity; (2) to increase the sustainable daily sendout capability to 1,200 million cubic feet per day (MMcfd) and its peaking capacity to 1,300 MMcfd; and (3) to accommodate two LNG tankers at one time. Trunkline LNG seeks authorization to construct and operate the following new facilities at its existing site:

- LNG ship unloading facility with three liquid unloading arms, one vapor return/delivery arm, mooring and breasting dolphins, fendering system, and support trestles;
- One 880,000 barrel (2.9 billion cubic feet of gas equivalent) double-wall LNG storage tank with spill containment dike;
- Three 360 MMcfd first stage LNG pumps;
- Four 192 MMcfd second stage LNG pumps with a recondenser vessel;
- Three 150 MMcfd submerged combustion vaporizers;
- One desuperheater;
- High expansion foam building;
- Electrical building;
- One cryogenic fuel gas/ship vapor return compressor;

[1] Trunkline LNG's application was filed with the Commission under Section 7 of the Natural Gas Act and Part 157 of the Commission's regulations.

• Two 22 megawatt combustion turbine electric generators capable of handling the sendout volume and the unloading of two ships simultaneously; and

• Associated civil, mechanical, electrical, control, and hazard detection systems.

In a related application filed under Docket No. CP02–55–000, CMS Trunkline Gas Company, LLC (Trunkline Gas) seeks authorization to modify its metering facilities under Section 7(c) of the Natural Gas Act and Part 157 of the Commission's regulations. Trunkline Gas would replace two 16-inch-diameter orifice meter runs with two 16-inch-diameter ultrasonic meter runs and associated facilities. The remaining three 16-inch-diameter orifice meter runs would remain in place.

Land Requirements for Construction

The Trunkline LNG terminal occupies about 125 fenced acres on the Calcasieu Ship Channel. Through ownership and leases, Trunkline LNG has control of 395 acres. The proposed facilities would occupy about 8.8 acres of land within the developed site and 1.2 acres of water within the existing turning basin. Contractor staging and storage would temporarily affect an additional 35.3 acres of land within the developed site and 0.2 acre of water within the existing turning basin.

The EA Process

The National Environmental Policy Act (NEPA) requires the Commission to take into account the environmental impacts that could result from an action whenever it considers the issuance of a Certificate of Public Convenience and Necessity. NEPA also requires us to discover and address concerns the public may have about proposals. We call this ''scoping''.[2] The main goal of the scoping process is to focus the analysis in the EA on the important environmental issues. By this Notice of Intent, the Commission requests public comments on the scope of the issues it will address in the EA. All comments received are considered during the preparation of the EA. State and local government representatives are encouraged to notify their constituents of this proposed action and encourage them to comment on their areas of concern.

The EA will discuss impacts that could occur as a result of the construction and operation of the proposed project under these general headings:

• Geology and soils
• Water resources, fisheries, and wetlands
• Vegetation and wildlife
• Air quality and noise
• Land use
• Cultural resources
• Endangered and threatened species
• Public safety

We will also evaluate possible alternatives to the proposed project or portions of the project, and make recommendations on how to lessen or avoid impacts on the various resource areas.

Our independent analysis of the issues will be presented in the EA. Depending on the comments received during the scoping process, the EA may be published and mailed to Federal, state, and local agencies, public interest groups, interested individuals, affected landowners, newspapers, libraries, and the Commission's official service list for this proceeding. A comment period will be allotted for review if the EA is published. We will consider all comments on the EA before we make our recommendations to the Commission.

To ensure your comments are considered, please carefully follow the instructions in the public participation section beginning on page 4.

Currently Identified Environmental Issues

We have already identified several environmental issues that we think deserve attention based on a preliminary review of the proposed facilities and the environmental information provided by Trunkline LNG. This preliminary list of issues may be changed based on your comments and our analysis.

• Up to 175 LNG tankers per year would transit the Calcasieu Ship Channel to the terminal by the year 2006.

• Environmental and technical issues associated with the construction and operation of: a LNG ship unloading facility; a 880,000 barrel LNG storage tank; and the expansion of the terminal's sendout capacity.

Public Participation

You can make a difference by providing us with your specific comments or concerns about the project. By becoming a commentor, your concerns will be addressed in the EA and considered by the Commission. You should focus on the potential environmental effects of the proposal, alternatives to the proposal, and measures to avoid or lessen environmental impact. The more specific your comments, the more useful they will be. Please carefully follow these instructions to ensure that your comments are received in time and properly recorded:

• Send an original and two copies of your letter to: Magalie R. Salas, Secretary, Federal Energy Regulatory Commission, 888 First St., NE., Room 1A, Washington, DC 20426.

• Label one copy of the comments for the attention of the Gas 1, PJ–11.1.

• Reference Docket No. CP02–60–000.

• Mail your comments so that they will be received in Washington, DC on or before March 15, 2002.

Comments may also be filed electronically via the Internet in lieu of paper. See 18 CFR 385.2001(a)(1)(iii) and the instructions on the Commission's web site at *http://www.ferc.gov* under the ''e-Filing'' link and the link to the User's Guide. Before you can file comments you will need to create an account which can be created by clicking on ''Login to File'' and then ''New User Account.'' Due to current events, we cannot guarantee that we will receive mail on a timely basis from the U.S. Postal Service, and we do not know how long this situation will continue. However, we continue to receive filings from private mail delivery services, including messenger services, in a reliable manner. The Commission encourages electronic filing of any comments or interventions or protests to this proceeding. We will include all comments that we receive within a reasonable time frame in our environmental analysis of this project.

Public Scoping Meeting and Site Visit

In addition to asking for written comments, we invite you to attend a public scoping meeting that we will conduct in the project area. The purpose of the scoping meeting is to provide state and local agencies, interested groups, affected landowners, and the general public with an opportunity to learn more about the project and another chance to present us with environmental issues or concerns they believe should be addressed in the EA. A transcript of the meeting will be made so that your comments will be accurately recorded. The location and time is listed below:

March 6, 2002, 7:00 pm, The Chamber—Southwest Louisiana, Ground Floor Meeting Room, 120 West Pujo Street, Lake Charles, LA.

The purpose of the scoping meeting is limited to environmental issues only.

[2] ''We'', ''us'', and ''our'' refer to the environmental staff of the Office of Energy Projects (OEP).

Technical meetings associated with the engineering and cryogenic design of the facility may be conducted at a later date.

Becoming an Intervenor

In addition to involvement in the EA scoping process, you may want to become an official party to the proceeding known as an ''intervenor''. Intervenors play a more formal role in the process. Among other things, intervenors have the right to receive copies of case-related Commission documents and filings by other intervenors. Likewise, each intervenor must provide 14 copies of its filings to the Secretary of the Commission and must send a copy of its filings to all other parties on the Commission's service list for this proceeding. If you want to become an intervenor you must file a motion to intervene according to rule 214 of the Commission's rules of practice and procedure (18 CFR 385.214) (see appendix).[3] Only intervenors have the right to seek rehearing of the Commission's decision.

Affected landowners and parties with environmental concerns may be granted intervenor status upon showing good cause by stating that they have a clear and direct interest in this proceeding which would not be adequately represented by any other parties. You do not need intervenor status to have your environmental comments considered.

Additional information about the proposed project is available from the Commission's Office of External Affairs at (202) 208–1088 or on the FERC website (www.ferc.gov) using the ''RIMS'' link to information in this docket number. Click on the ''RIMS'' link, select ''Docket #'' from the RIMS Menu, and follow the instructions. For assistance with access to RIMS, the RIMS helpline can be reached at (202) 208–2222.

Similarly, the ''CIPS'' link on the FERC Internet website provides access to the texts of formal documents issued by the Commission, such as orders, notices, and rulemakings. From the FERC Internet website, click on the ''CIPS'' link, select ''Docket #'' from the CIPS menu, and follow the instructions. For assistance with access to CIPS, the CIPS helpline can be reached at (202) 208–2474.

Linwood A. Watson, Jr.,

Deputy Secretary.

[FR Doc. 02–4033 Filed 2–19–02; 8:45 am]

BILLING CODE 6717–01–P

[3] Interventions may also be filed electronically via the Internet in lieu of paper. See the previous discussion on filing comments electronically. The appendix referenced in this notice are not being printed in the **Federal Register**. Copies are available on the Commission's website at the ''RIMS'' link or from the Commission's Public Reference and Files Maintenance Branch, 888 First Street, NE., Washington, DC 20426, or call (202) 208–1371. For instructions on connecting to RIMS refer to the last page of this notice. Copies of the appendix were sent to all those receiving this notice in the mail.

DEPARTMENT OF ENERGY

Federal Energy Regulatory Commission

Notice of Applications Ready for Environmental Analysis and Soliciting Comments, Recomendations, Terms and Conditions, and Prescriptions

February 13, 2002.

Take notice that the following hydroelectric applications have been filed with the Commission and are available for public inspection.

a. *Type of Application:* New Major Licenses.

b. *Projects:* Soda Project No. 20–019, Grace-Cove Project No. 2401–007, and Oneida Project No. 472–017.

c. *Date filed:* September 27, 1999.

d. *Applicant:* PacifiCorp.

e. *Location:* On the Bear River in Caribou and Franklin Counties, Idaho. The projects are partially located on United States lands administered by the Bureau of Land Management.

f. *Filed Pursuant to:* Federal Power Act, 16 U.S.C. §§ 791 (a)–825(r).

g. *Applicant Contact:* Randy Landolt, Managing Director, Hydro Resources, PacifiCorp, 825 NE Multnomah Street, Suite 1500, Portland, OR 97232, (503) 813–6650; or Thomas H. Nelson, 825 NE Multnomah Street, Suite 925, Portland, OR 97232, (503) 813–5890.

h. *FERC Contact:* Susan O'Brien, e-mail address susan.obrien@ferc.fed.us, or (202) 219–2840.

i. *Deadline for filing comments, recommendations, terms and conditions, and prescriptions:* 60 days from the issuance of this notice.

All documents (original and eight copies) should be filed with: Magalie R. Salas, Secretary, Federal Energy Regulatory Commission, 888 First Street, NE, Washington, DC 20426.

The Commission's Rules of Practice require all intervenors filing documents with the Commission to serve a copy of that document on each person on the official service list for the project. Further, if an intervenor files comments or documents with the Commission relating to the merits of an issue that may affect the responsibilities of a particular resource agency, they must also serve a copy of the document on that resource agency.

Comments, recommendations, terms and conditions, and prescriptions may be filed electronically via the Internet in lieu of paper. See 18 CFR 385.2001(a)(1)(iii) and the instructions on the Commission's Web site, http://www.ferc.gov, under the ''e-Filing'' link.

j. This application has been accepted, and is ready for environmental analysis at this time.

k. The existing Soda Project consists of: (1) The 103-foot-high and 433-foot-long concrete gravity Soda dam with a 114-foot-long spillway section; (2) the Soda reservoir with a surface area of 1,100 acres, an active storage capacity of 16,300 acre-feet, and a maximum water surface elevation of 5,720 feet; (3) the Soda powerhouse containing two units with a total installed capacity of 14 megawatts (MW); and (4) other appurtenances.

The existing Grace Development consists of: (1) A 51-foot-high and 180-foot-long rock filled timber crib dam that creates a 250-acre-foot usable storage capacity forebay; (2) a 26,000-foot-long flowline and surge tanks; and (3) a powerhouse with three units with total installed capacity of 33 MW. The Cove Development consists of: (1) A 26.5-foot-high and 141-foot-long concrete dam creating a 60-acre-foot capacity forebay; (2) a 6,125-foot-long concrete and wood flume; (3) a 500-foot-long steel penstock; and (4) a powerhouse with a 7.5-MW unit.

The existing Oneida Project consists of: (1) The 111-foot-high and 456-foot-long concrete gravity Oneida dam; (2) the Oneida reservoir with an active storage of 10,880 acre-feet and a surface area of 480 acres; (3) a 16-foot-diameter, 2,240-foot-long flowline; (4) a surge tank; (5) three 12-foot-diameter, 120-foot-long steel penstocks; (6) the Oneida powerhouse with three units with a total installed capacity of 30 MW; and (7) other appurtenances.

l. A copy of the application is on file with the Commission and is available for public inspection. This filing may also be viewed on the Web at http://www.ferc.gov using the ''RIMS'' link—select ''Docket #'' and follow the instructions (call 202–208–2222 for assistance). A copy is also available for inspection and reproduction at the address in item g above.

m. The Commission directs, pursuant to section 4.34(b) of the Regulations (see Order No. 533 issued May 8, 1991, 56 FR 23108, May 20, 1991) that all comments, recommendations, terms and conditions and prescriptions concerning the application be filed with the Commission within 60 days from the issuance date of this notice. All reply

comments must be filed with the Commission within 105 days from the date of this notice.

All filings must (1) bear in all capital letters the title ''COMMENTS'', ''REPLY COMMENTS'', ''RECOMMENDATIONS,'' ''TERMS AND CONDITIONS,'' or ''PRESCRIPTIONS''; (2) set forth in the heading the name of the applicant and the project number of the application to which the filing responds; (3) furnish the name, address, and telephone number of the person submitting the filing; and (4) otherwise comply with the requirements of 18 CFR 385.2001 through 385.2005. All comments, recommendations, terms and conditions or prescriptions must set forth their evidentiary basis and otherwise comply with the requirements of 18 CFR 4.34(b). Agencies may obtain copies of the application directly from the applicant. Each filing must be accompanied by proof of service on all persons listed on the service list prepared by the Commission in this proceeding, in accordance with 18 CFR 4.34(b), and 385.2010.

Linwood A. Watson, Jr.,

Deputy Secretary.

[FR Doc. 02–4037 Filed 2–19–02; 8:45 am]

BILLING CODE 6717–01–P

DEPARTMENT OF ENERGY

Federal Energy Regulatory Commission

Notice of Application Tendered for Filing With the Commission, Soliciting Additional Study Requests, and Establishing Procedures for Relicensing and a Deadline for Submission of Final Amendments

February 13, 2002.

Take notice that the following hydroelectric application has been filed with the Commission and is available for public inspection.

a. *Type of Application:* New Major License.

b. *Project No.:* 7000–015.

c. *Date Filed:* January 30, 2002.

d. *Applicant:* Newton Falls Holdings, LLC (NFH).

e. *Name of Project:* Newton Falls Hydroelectric Project.

f. *Location:* The existing project is located on the Oswegatchie River in St. Lawrence County, New York. The project does not affect federal lands.

g. *Filed Pursuant to:* Federal Power Act 16 U.S.C. 791(a)–825(r).

h. *Applicant Contact:* Harold G. Slone, Manager, Newton Falls Holdings, LLC, 1930 West Wesley Road, NW, Atlanta, GA 30327; Telephone (770) 638–1172

i. *FERC Contact:* Jim Haimes, (202) 219–2780 or *james.haimes@ferc.gov.*

j. *Deadline for filing additional study requests:* April 1, 2002.

All documents (original and eight copies) should be filed with: Magalie Roman Salas, Secretary, Federal Energy Regulatory Commission, 888 First Street, NE, Washington, DC 20426.

The Commission's Rules of Practice require all intervenors filing documents with the Commission to serve a copy of that document on each person on the official service list for the project. Further, if an intervenor files comments or documents with the Commission relating to the merits of an issue that may affect the responsibilities of a particular resource agency, they must also serve a copy of the document on that resource agency.

Additional study requests may be filed electronically via the Internet in lieu of paper. See 18 CFR 385.2001(a)(1)(iii) and the instructions on the Commission's Web site (http://www.ferc.gov) under the ''e-Filing'' link.

k. This application is not ready for environmental analysis at this time.

l. The existing Newton Falls Hydroelectric Project consists of an upper and a lower development with a combined installed capacity of 2,220 kilowatts (kW). The project produces an average annual generation of 9,500,000 kilowatt-hours. From approximately 1927 until late 2000, the electricity produced by the project was consumed by the adjacent Newton Falls Paper Mill. Since this facility ceased manufacturing operations, almost all electricity produced at the project has been sold to the Niagara Mohawk Power Corporation.

The upper development includes the following constructed facilities: (1) A 40-foot-high, 600-foot-long, concrete gravity dam with 3-foot-high flash boards mounted on the 58-foot-long spillway; (2) a 42-foot-long floodgate structure with four gates; (3) a 650-acre reservoir with a gross storage capacity of 5,930 acre-feet; (4) a reinforced concrete intake structure with a maximum height of 25 feet, equipped with trash racks having 2-inch spacing; (5) a 9-foot-diameter, 1,200-foot-long, wood stave penstock supported on timber cradles and mud sills; (6) a riveted steel surge tank; (7) a 49-foot-long, 26-foot-wide, and 45-foot-high, reinforced concrete and brick powerhouse, containing three vertical Francis turbines with a combined maximum hydraulic capacity of 464 cubic feet per second (cfs) and a net head of 46 feet, directly connected to three generator units having a total installed capacity of 1,540 kilowatts (kW); (8) a 375-foot-long, 60 Hertz transmission line; and (9) appurtenant facilities.

The lower development includes the following constructed facilities: (1) A 28-foot-high, 350-foot-long, concrete gravity dam with 3-foot-high flash boards mounted on the 120-foot-long spillway; (2) a 9-acre impoundment with a gross storage capacity of 115 acre-feet; (3) a 15-foot-high, reinforced concrete intake structure, equipped with trash racks having 2-inch spacing; (4) a 60-foot-long by 40-foot-wide, reinforced concrete powerhouse located immediately downstream of the dam, containing one vertical Francis turbine with a maximum hydraulic capacity of 486 cfs and a net head of 22 feet, directly connected to a 680-kW generator unit; (5) a 2,200-foot-long, 60 Hertz transmission line; and (6) appurtenant facilities.

With the exception of periods of high inflows, the upper development is operated as a daily peaking facility with most generation taking place during the hours of peak electricity demand. This store and release operation is restricted during the months of May and June, the spawning period for smallmouth bass and northern pike, such that daily reservoir drawdowns do not exceed 1 foot from the top of the flash boards. During the remainder of the year, daily peaking causes reservoir drawdowns of up to 2.2 feet from the top of the flash boards.

The tailrace of the upper development discharges directly into the lower development's reservoir. Generally, the hydraulic output of the lower powerhouse is established such that it releases approximately the same flow as the upper one. Consequently, daily drawdowns of the lower reservoir are minimal.

Although the project's current license does not mandate the provision of minimum flows in the project's bypassed reaches, the licensee is required to provide a continuous minimum flow of 100 cfs or project inflow, whichever is less, below the lower development. Further, the existing license does not require the provision of public recreational facilities at the project. Currently, the applicant and concerned agencies and non-governmental organizations are discussing a settlement agreement that would require NFH to implement various environmental enhancement measures at the project.

m. *Locations of the Application:* A copy of the application is available for inspection and reproduction at the

Commission's Public Reference Room, Room 2A, located at 888 First Street, NE, Washington, DC 20426, or by calling (202) 208–1371. The application may be viewed on the Web at *http://www.ferc.gov* using the ''RIMS'' link—select ''Docket P–7000'' and follow the instructions (call (202) 208–2222 for assistance). A copy is also available for inspection and reproduction at the address in item h above.

n. With this notice, we are initiating consultation with the New York State Historic Preservation Officer as required by Section 106, National Historic Preservation Act, and the regulations of the Advisory Council on Historic Preservation, 36 CFR 800.4.

o. Under section 4.32(b)(7) of the Commission's regulations (18 CFR 4.32(b)(7)), if any resource agency, Indian Tribe, or person believes that the applicant should conduct an additional scientific study to form an adequate factual basis for a complete analysis of the application on its merits, they must file a request for the study with the Commission, not later than 60 days after the date the application is filed, and must serve a copy of the request on the applicant.

p. Procedural schedule and final amendments: The application will be processed to include the following actions, some of which may be combined to expedite processing:

Notice of application accepted for filing
Notice of NEPA scoping
Notice of application ready for environmental analysis
Notice of the availability of the draft NEPA document
Notice of the availability of the final NEPA document
Order issuing the Commission's decision on the application

Final amendments to the application must be filed with the Commission no later than 30 days from the issuance date of the notice of ready for environmental analysis.

Linwood A. Watson, Jr.,

Deputy Secretary.

[FR Doc. 02–4038 Filed 2–19–02; 8:45 am]

BILLING CODE 6717–01–P

ENVIRONMENTAL PROTECTION AGENCY

[FRL–7147–7]

Acid Rain Program: Notice of State Acid Rain Programs

AGENCY: Environmental Protection Agency (EPA).

ACTION: Notice.

SUMMARY: Under titles IV and V of the Act, State and local air permitting authorities develop and administer acid rain programs as part of their title V operating permits programs. The state and local permitting authorities listed in this notice submitted acid rain programs for EPA review that are acceptable to the EPA Administrator as part of their title V operating permits programs. This notice is for informational purposes only and does not supplant any other **Federal Register** notices under title V.

FOR FURTHER INFORMATION CONTACT: Robert Miller, U.S. EPA, Clean Air Markets Division (6204N), 1200 Pennsylvania Ave. NW, Washington, DC 20460, (202) 564–9077.

SUPPLEMENTARY INFORMATION: The following state and local permitting authorities have submitted Acid Rain programs that are acceptable to the EPA Administrator as part of their title V operating permits programs:

Region 3

The Delaware Department of Natural Resources and Environmental Control in the state of Delaware, the Maryland Department of the Environment in the state of Maryland, the Pennsylvania Department of Environmental Protection in the state of Pennsylvania, the Virginia Department of Environmental Quality in the Commonwealth of Virginia, and the Department of Health, Bureau of Environmental Quality in the District of Columbia;

Region 4

The Western North Carolina Regional Air Quality Agency in the state of North Carolina;

Region 5

The Illinois Environmental Protection Agency in the state of Illinois and the Ohio Environmental Protection Agency in the state of Ohio;

Region 8

The Wyoming Department of Environmental Quality in the State of Wyoming.

Dated: February 8, 2002.

Brian J. McLean,

Director, Acid Rain Division, Office of Atmospheric Programs, Office of Air and Radiation.

[FR Doc. 02–4069 Filed 2–19–02; 8:45 am]

BILLING CODE 6560–50–P

ENVIRONMENTAL PROTECTION AGENCY

[OPP–50875C; FRL–6820–4]

Experimental Use Permit; Receipt of Application

AGENCY: Environmental Protection Agency (EPA).

ACTION: Notice.

SUMMARY: This notice announces receipt of an application to amend 524–EUP–93 from Monsanto Company requesting an experimental use permit (EUP) for the plant-pesticide *Bacillus thuringiensis* Cry3Bb protein and the genetic material necessary for its production (Vector ZMIR13L) in corn plants. The Agency has determined that the application may be of regional and national significance. Therefore, in accordance with 40 CFR 172.11(a), the Agency is soliciting comments on this application.

DATES: Comments, identified by docket control number OPP–50875C, must be received on or before March 22, 2002.

ADDRESSES: Comments and data may be submitted by mail, electronically, or in person. Please follow the detailed instructions for each method as provided in Unit I. of the **SUPPLEMENTARY INFORMATION**. To ensure proper receipt by EPA, it is imperative that you identify docket control number OPP–50875C in the subject line on the first page of your response.

FOR FURTHER INFORMATION CONTACT: By mail: Mike Mendelsohn, Biopesticides and Pollution Prevention Division (7511C), Office of Pesticide Programs, Environmental Protection Agency, 1200 Pennsylvania Ave., NW., Washington, DC 20460; telephone number: (703) 308–8715; e-mail address: mendelsohn.mike@epa.gov.

SUPPLEMENTARY INFORMATION:

I. General Information

A. Does this Action Apply to Me?

This action is directed to the public in general. This action may, however, be of interest to those persons who are interested in agricultural biotechnology or may be required to conduct testing of chemical substances under the Federal Food, Drug, and Cosmetic Act (FFDCA) or the Federal Insecticide, Fungicide, and Rodenticide Act (FIFRA). Since other entities may also be interested, the Agency has not attempted to describe all the specific entities that may be affected by this action. If you have any questions regarding the applicability of this action to a particular entity, consult the person listed under **FOR FURTHER INFORMATION CONTACT**.

B. How Can I Get Additional Information, Including Copies of this Document and Other Related Documents?

1. *Electronically*. You may obtain electronic copies of this document, and certain other related documents that might be available electronically, from the EPA Internet Home Page at http://www.epa.gov/. To access this document, on the Home Page select ''Laws and Regulations,'' ''Regulations and Proposed Rules,'' and then look up the entry for this document under the ''**Federal Register**—Environmental Documents.'' You can also go directly to the **Federal Register** listings at http://www.epa.gov/fedrgstr/.

2. *In person*. The Agency has established an official record for this action under docket control number OPP–50875C. The official record consists of the documents specifically referenced in this action, and other information related to this action, including any information claimed as Confidential Business Information (CBI). This official record includes the documents that are physically located in the docket, as well as the documents that are referenced in those documents. The public version of the official record does not include any information claimed as CBI. The public version of the official record, which includes printed, paper versions of any electronic comments submitted during an applicable comment period is available for inspection in the Public Information and Records Integrity Branch (PIRIB), Rm. 119, Crystal Mall #2, 1921 Jefferson Davis Hwy., Arlington, VA, from 8:30 a.m. to 4 p.m., Monday through Friday, excluding legal holidays. The PIRIB telephone number is (703) 305–5805.

C. How and to Whom Do I Submit Comments?

You may submit comments through the mail, in person, or electronically. To ensure proper receipt by EPA, it is imperative that you identify docket control number OPP–50875C in the subject line on the first page of your response.

1. *By mail*. Submit your comments to: Public Information and Records Integrity Branch (PIRIB), Information Resources and Services Division (7502C), Office of Pesticide Programs (OPP), Environmental Protection Agency, 1200 Pennsylvania Ave., NW., Washington, DC 20460.

2.*In person or by courier*. Deliver your comments to: Public Information and Records Integrity Branch (PIRIB), Information Resources and Services Division (7502C), Office of Pesticide Programs (OPP), Environmental Protection Agency, Rm. 119, Crystal Mall #2, 1921 Jefferson Davis Hwy., Arlington, VA. The PIRIB is open from 8:30 a.m. to 4 p.m., Monday through Friday, excluding legal holidays. The PIRIB telephone number is (703) 305–5805.

3. *Electronically*. You may submit your comments electronically by e-mail to: opp-docket@epa.gov, or you can submit a computer disk as described above. Do not submit any information electronically that you consider to be CBI. Avoid the use of special characters and any form of encryption. Electronic submissions will be accepted in WordPerfect 6.1/8.0 or ASCII file format. All comments in electronic form must be identified by docket control number OPP–50875C. Electronic comments may also be filed online at many Federal Depository Libraries.

D. How Should I Handle CBI That I Want to Submit to the Agency?

Do not submit any information electronically that you consider to be CBI. You may claim information that you submit to EPA in response to this document as CBI by marking any part or all of that information as CBI. Information so marked will not be disclosed except in accordance with procedures set forth in 40 CFR part 2. In addition to one complete version of the comment that includes any information claimed as CBI, a copy of the comment that does not contain the information claimed as CBI must be submitted for inclusion in the public version of the official record. Information not marked confidential will be included in the public version of the official record without prior notice. If you have any questions about CBI or the procedures for claiming CBI, please consult the person listed under **FOR FURTHER INFORMATION CONTACT**.

E. What Should I Consider as I Prepare My Comments for EPA?

You may find the following suggestions helpful for preparing your comments:

1. Explain your views as clearly as possible.
2. Describe any assumptions that you used.
3. Provide copies of any technical information and/or data you used that support your views.
4. If you estimate potential burden or costs, explain how you arrived at the estimate that you provide.
5. Provide specific examples to illustrate your concerns.
6. Offer alternative ways to improve the notice.
7. Make sure to submit your comments by the deadline in this document.
8. To ensure proper receipt by EPA, be sure to identify the docket control number assigned to this action in the subject line on the first page of your response. You may also provide the name, date, and **Federal Register** citation.

II. Background

Monsanto Company has applied to amend/extend their EUP number 524–EUP–93 (see the **Federal Register** of July 27, 2001 (66 FR 39163) (FRL–6791–5)) to allow for additional testing until February 28, 2003 on up to 9,400 acres in Alabama, Arkansas, California, Colorado, Delaware, Florida, Georgia, Hawaii, Idaho, Illinois, Indiana, Iowa, Kansas, Kentucky, Louisiana, Maryland, Michigan, Minnesota, Mississippi, Missouri, Montana, Nebraska, New Mexico, New York, North Carolina, North Dakota, Ohio, Oklahoma, Pennsylvania, Puerto Rico, South Dakota, Tennessee, Texas, Utah, Virginia, and Wisconsin.

III. What Action is the Agency Taking?

Following the review of the Monsanto Company application and any comments and data received in response to this notice, EPA will decide whether to issue or deny the EUP request for this EUP program, and if issued, the conditions under which it is to be conducted. Any issuance of an EUP will be announced in the **Federal Register**.

IV. What is the Agency's Authority for Taking this Action?

The Agency's authority for taking this action is under 40 CFR part 172.

List of Subjects

Environmental protection, Experimental use permits.

Dated: February 11, 2002.

Janet L. Andersen,

Director, Biopesticides and Pollution Prevention Division, Office of Pesticide Programs.

[FR Doc. 02–4070 Filed 2–19–02; 8:45 am]

BILLING CODE 6560–50–S

ENVIRONMENTAL PROTECTION AGENCY

[OPP–50880A; FRL–6820–3]

Issuance of Experimental Use Permits

AGENCY: Environmental Protection Agency (EPA).

ACTION: Notice.

SUMMARY: EPA has granted experimental use permits (EUPs) to the following pesticide applicants. An EUP permits use of a pesticide for experimental or research purposes only in accordance with the limitations in the permit.

FOR FURTHER INFORMATION CONTACT: *By mail*: Biopesticides and Pollution Prevention Division (7511C), Office of Pesticide Programs, Environmental Protection Agency, 1200 Pennsylvania Ave., NW., Washington, DC 20460.

In person or by telephone: Contact the designated person at the following address at the office location, telephone number, or e-mail address cited in each EUP: 1921 Jefferson Davis Hwy., Arlington, VA.

SUPPLEMENTARY INFORMATION:

I. General Information

A. Does this Action Apply to Me?

This action is directed to the public in general. Although this action may be of particular interest to those persons who conduct or sponsor research on pesticides, the Agency has not attempted to describe all the specific entities that may be affected by this action. If you have any questions regarding the information in this action, consult the designated contact person listed for the individual EUP.

B. How Can I Get Additional Information, Including Copies of this Document and Other Related Documents?

You may obtain electronic copies of this document from the EPA Internet Home Page at *http://www.epa.gov*. On the Home Page select ''Laws and Regulations,'' ''Regulations and Proposed Rules,'' and then look up the entry for this document under the ''**Federal Register**—Environmental Documents.'' You can also go directly to the **Federal Register** listings at http://www.epa.gov/fedrgstr/.

II. EUPs

EPA has issued the following EUPs:

68467–EUP–3, 68467–EUP–5, 29964–EUP–1, and 29964–EUP–3. Issuance. Mycogen Seeds c/o Dow AgroSciences LLC, 9330 Zionsville Road, Indianapolis, IN 46268 and Pioneer Hi-Bred International, Inc., 7250 NW 62nd Avenue, Johnston, IA 50131. The issuance of these EUPs allow the use of the plant-incorporated protectants *Bacillus thuringiensis* 149B1 protein and the genetic material necessary for its production (from the insert of plasmid PHP 14352) in corn and *Bacillus thuringiensis* 149B1 protein and the genetic material necessary for its production (from the insert of plasmid PHP 12560) in corn. Notice of the receipt of application of these EUPs were published in the **Federal Register** on March 7, 2001 (66 FR 13735) (FRL–6770–4). On October 12, 2001, the EUPs were issued. EUPs issued to Mycogen Seeds c/o Dow AgroSciences allowed the planting of 19 acres each of field corn to evaluate the control of Western and Northern corn rootworm; and to do breeding and observation. The Mycogen Seeds' programs are authorized only in the States of Hawaii and the Commonwealth of Puerto Rico. EUPs issued to Pioneer Hi-Bred allowed the planting of 16 acres each of field corn to evaluate the control of Western and Northern corn rootworm; to do breeding and observation, and to do hybrid production for research or regulatory studies. The Pioneer Hi-Bred programs are authorized only in the States of Hawaii and the Commonwealth of Puerto Rico. These EUPs are effective from October 12, 2001 to March 31, 2002. The permits have been issued with the limitation that all treated crops will be genetically contained and destroyed or used for research purposes only. Two comments were received in reply to the **Federal Register** notice announcing receipt of this application. One comment was from a private citizen regarding concerns over organic farming and the viability of Bt sprayables. The other comment was from the National Grain and Feed Association and raised pollen flow, neighboring farm notification, chain of custody, and contracting and disposal issues. These EUPs are of low acreage and given the containment provisions, the chance for pollen transfer to non-149B1 corn is extremely minimal to non-existent. More detailed information, including EPA evaluations and the experimental programs, are available in the public docket for these EUPs, docket control number OPP–50880. (Mike Mendelsohn; Rm. 910W16, Crystal Mall #2; telephone number: (703) 308–8715; e-mail address: *mendelsohn.mike@epa.gov*).

Persons wishing to review these EUPs are referred to the designated contact person. Inquiries concerning these permits should be directed to the persons cited above. It is suggested that interested persons call before visiting the EPA office, so that the appropriate file may be made available for inspection purposes from 8 a.m. to 4 p.m., Monday through Friday, excluding legal holidays.

Authority: 7 U.S.C. 136.

List of Subjects

Environmental protection, Experimental use permits.

Dated: February 8, 2002.

Janet L. Andersen,

Director, Biopesticides and Pollution Prevention Division, Office of Pesticide Programs.

[FR Doc. 02–4072 Filed 2–19–02; 8:45 am]

BILLING CODE 6560–50–S

FEDERAL COMMUNICATIONS COMMISSION

Public Information Collections Approved by Office of Management and Budget

February 11, 2002.

The Federal Communications Commission (FCC) has received Office of Management and Budget (OMB) approval for the following public information collections pursuant to the Paperwork Reduction Act of 1995, Public Law 104–13. An agency may not conduct or sponsor and a person is not required to respond to a collection of information unless it displays a currently valid control number. For further information contact Shoko B. Hair, Federal Communications Commission, (202) 418–1379.

Federal Communications Commission

OMB Control No.: 3060–0973.

Expiration Date: 11/30/2004.

Title: Section 64.11210(e)—Sale or Transfer of Subscriber Base to Another Carrier (CC Dockets 00–257 and 94–129).

Form No.: N/A.

Respondents: Business or other for-profit.

Estimated Annual Burden: 75 respondents; 6 hour per response (avg.); 450 total annual burden hours.

Estimated Annual Reporting and Recordkeeping Cost Burden: $0.

Frequency of Response: On occasion; third party disclosure.

Description: In the First Report and Order in CC Docket No. 00–257 and the Fourth Report and Order in CC Docket No. 94–129 (Fourth Report and Order), the Commission amended section 64.1120 of its rules, as part of its biennial regulatory review effort, to establish a streamlined self-certification process for the carrier-to-carrier sale or transfer of subscriber bases, thereby eliminating the need to obtain a waiver of Commission rules prior to closing a transaction. This process is designed to ensure that the affected subscribers have adequate information about the carrier change in advance, that they are not financially harmed by the change, and that they will experience a seamless transition of service from their original carrier to the acquiring carrier. This

process also will provide the Commission with information it needs to fulfill its consumer protection obligations. Pursuant to 64.1120(e), a telecommunications carrier may acquire, through a sale or transfer, either part or all of another telecommunications carrier's subscriber base without obtaining each subscriber's authorization and verification in accordance with Section 64.1120(c), provided that the acquiring carrier complies with the streamlined procedures set forth in Section 64.1120(e)(1) through (3). a. Section 64.1120(e)(1)–(2), Notification and Certification to the Commission. Pursuant to 47 CFR 64.1120(e)(1)–(3), no later than 30 days before the planned transfer of the affected subscribers from the selling or transferring carrier to the acquiring carrier, the acquiring carrier shall file with the Commission's Office of the Secretary a letter notification in CC Docket No. 00–257 providing the names of the parties to the transaction, the types of telecommunications services to be provided to the affected subscribers, and the date of the transfer of the subscriber base to the acquiring carrier. The acquiring carrier also shall certify compliance with the requirement to provide advance subscriber notice in accordance with 47 CFR 64.1120(e)(3). In addition, the acquiring carrier shall attach a copy of the notice sent to the affected subscribers. If, subsequent to the filing of the letter notification with the Commission, any material changes to the required information should develop, the acquiring carrier shall file written notification of these changes with the Commission no more than 10 days after the transfer date announced in the prior notification. See 47 CFR 64.1120(e)(1)–(2). (*Number of respondents:* 75; *hours per response:* 1 hour; *total annual burden:* 75 hours). b. Section 64.1120(e)(3), Pre-Transfer Subscriber Notification and Certification to the Commission. Not later than 30 days before the transfer of the affected subscribers from the selling or transferring carrier to the acquiring carrier, the acquiring carrier shall provide written notice to each affected subscriber of the information specified in 47 CFR 64.1120(e)(3). (*Number of respondents:* 75; *hours per response:* 5 hours; *total annual burden:* 75 hours). The information will be used to implement Section 258 of the Communications Act of 1934, as amended. The information will expedite procedures for handling the sale or transfer of subscribers, while adequately protecting consumers. Obligation to respond: Required to obtain or retain benefits.

OMB Control No.: 3060–0298.

Expiration Date: 02/28/2005.

Title: Tariffs (Other Than Tariff Review Plan)—Part 61.

Form No.: N/A.

Respondents: Business or other for-profit.

Estimated Annual Burden: 3000 respondents; 45 hours per response (avg.); 135,000 total annual burden hours (for all collections approved under this control number).

Estimated Annual Reporting and Recordkeeping Cost Burden: $2,161,000.

Frequency of Response: On occasion; Annually, Biennially, Third Party Disclosure.

Description: Sections 201, 202, 203, 204 and 205 of the Communications Act of 1934, as amended, 47 U.S.C. 201, 202, 203, 204 and 205, require that common carriers establish just and reasonable charges, practices and regulations for the services they provide. The schedules containing these charges, practices and regulations must be filed with the Commission, which is required to determine whether such schedules are just, reasonable and not unduly discriminatory. Part 61 of the Commission's Rules establishes the procedures for filing tariffs which contain the charges, practices and regulations of the common carriers, supporting economic data and other related documents. The supporting data must also conform to other parts of the Rules such as Parts 36 and 69. Part 61 prescribes the framework for the initial establishment of and subsequent revisions to tariffs. Tariffs that do not conform to Part 61 requirements may be rejected. In addition to tariffs filed with the Commission, carriers may be required to post their schedules or rates and regulations. See 47 CFR 61.72. On April 27, 2001, the Commission released the Seventh Report and Order (i.e., the CLEC Access Order) in CC Docket No. 96–262, which limited the application of the Commission's tariff rules to interstate access services provided by nondominant local exchange carriers (i.e., competitive local exchange carriers (CLECs)). Pursuant to the CLEC Access Order, CLEC access rates that are at or below a benchmark set by the Commission will be presumed to be just and reasonable and may be imposed by tariff. Above the benchmark, CLEC access services will be mandatorily detariffed. The practical effect of the CLEC Access Order is that some CLECs will need to revise their existing tariffs to bring their rates into line with the benchmark. CLECs will need to follow similar procedures on an annual basis for the next three years, as the benchmark declines pursuant to a schedule adopted by the Commission. The information collected through a carrier's tariff is used by the Commission to determine whether the services offered are just and reasonable as the Act requires. The tariffs and any supporting documentation are examined in order to determine if the services are offered in a just and reasonable manner. Obligation to respond: Mandatory.

OMB Control No.: 3060–0989.

Expiration Date: 11/30/2004.

Title: Procedures for Applicants Requiring Section 214 Authorization for Domestic Interstate Transmission Lines Acquired through Corporate Control.

Form No.: N/A.

Respondents: Business or other for-profit.

Estimated Annual Burden: 25 respondents; 65 hour per response (avg.); 1625 total annual burden hours.

Estimated Annual Reporting and Recordkeeping Cost Burden: $20,375.

Frequency of Response: On occasion.

Description: In a Public Notice (DA 01–1654), released 7/20/01, the Commission announced procedures for common carriers requiring authorization under section 214 of the Communications Act of 1934, as amended to acquire domestic interstate transmission lines through an acquisition of control. Under section 214, carriers must obtain Commission approval before constructing, acquiring, or operating an interstate transmission line. 47 CFR 63.01 confers blanket authority under section 214 for common carriers to construct, acquire, and operate domestic transmission lines without prior Commission approval. This blanket authority, however, expressly does not apply when there is a transfer of interstate lines resulting from an acquisition of corporate control.

Pursuant to the Public Notice, domestic section 214 applications involving acquisitions of corporate control, at a minimum, should specify: (1) A description of the transaction and the parties involved; (2) the type of services the parties provide and the locations where those services are provided; (3) any applications pending or to be filed with the FCC that relate to the same transaction; (4) a copy of the relevant merger agreement, if any; and (5) a statement as to how granting the application will serve the public convenience and necessity, taking into account any adverse effect on competition in any relevant market. In all instances, applications for domestic section 214 authority involving

acquisitions of corporate control should identify the application as one for ''domestic'' service in the cover letter of the first page of the applications. All domestic section 214 applications involving acquisitions of corporate control must be accompanied by the relevant filing fee, and a certification pursuant to FCC Rules 1.2001 through 1.2003 that no party to the application is subject to a denial of Federal benefits pursuant to section 5301 of the Anti-Drug Abuse Act of 1988 (21 U.S.C. Sec. 853(a)). See 47 CFR 1.1105 (fee schedule); 1.2001–2003 (Anti-Drug Abuse certification). After an applicant files an application, interested third parties may file comments on or before a due date set forth by the FCC or Common Carrier Bureau (Bureau) in a Public Notice. The information will be used to ensure that applicants comply with the requirements of 47 U.S.C. 214. Obligation to respond: Required to obtain or retain a benefit.

OMB Control No.: 3060–0391.

Expiration Date: 2/28/2005.

Title: Program to Monitor the Impacts of the Universal Service Support Mechanisms, CC Docket Nos. 98–202, 96–45.

Form No.: N/A.

Respondents: Business or other for-profit.

Estimated Annual Burden: 1439 respondents; 40 minutes to 1.5 hours per response (avg.); 1716 total annual burden hours.

Estimated Annual Reporting and Recordkeeping Cost Burden: $0.

Frequency of Response: Annually.

Description: Both now and prior to the Telecommunications Act of 1996, the Commission has taken steps to promote universal access to telephone service. In 1987, the Commission, acting on the recommendation of the Separations Joint Board, adopted a monitoring program to address universal service and separations issues raised in CC Docket No. 80–286. Because that monitoring program (and the Monitoring Reports derived from the program) integrated information from all fifty states, Commission and state staff worked closely to prepare accurate and useful analyses. The Monitoring Reports have been and continue to be widely used by the public, state commissions, and industry because they provide valuable information on universal service support in all states. Currently the monitoring program consists of one item. Information on network usage and growth: This information is generally maintained by all companies that settle their accounts with the National Exchange Carriers Association (NECA) on a cost basis. This information is collected by NECA. The data collected are: local dial equipment minutes, intrastate toll dial equipment minutes, interstate toll dial equipment minutes, total dial equipment minutes, interstate dial equipment minute factors, and interstate access minutes. The monitoring program is necessary for the Commission, the Joint Board, Congress, and the general public to assess the impact of the new universal service support mechanisms. Failure to implement the program would make it impossible to determine the impact of these mechanisms and to assure that the implementation of section 254 fulfills the intent of Congress and furthers the public interest. Obligation to respond: Mandatory.

Public reporting burden for the collections of information are as noted above. Send comments regarding the burden estimates or any other aspect of the collections of information, including suggestions for reducing the burden to Performance Evaluation and Records Management, Washington, DC 20554.

Federal Communications Commission.

William Caton,

Acting Secretary.

[FR Doc. 02–4002 Filed 2–19–02; 8:45 am]

BILLING CODE 6712–01–U

FEDERAL MARITIME COMMISSION

Notice of Agreement(s) Filed

The Commission hereby gives notice of the filing of the following agreement(s) under the Shipping Act of 1984. Interested parties can review or obtain copies of agreements at the Washington, DC offices of the Commission, 800 North Capitol Street, NW., Room 962. Interested parties may submit comments on an agreement to the Secretary, Federal Maritime Commission, Washington, DC 20573, within 10 days of the date this notice appears in the **Federal Register**.

Agreement No.: 011677–004.

Title: United States Australasia Agreement.

Parties: Australia-New Zealand Direct Line, CMA CGM, S.A., Contship Containerlines, Hamburg-Sud, P&O Nedlloyd Limited, Wallenius Wilhelmsen Lines AS.

Synopsis: The proposed agreement modification would extend for two months the parties' existing trade participation program.

By Order of the Federal Maritime Commission.

Dated: February 14, 2002.

Bryant L. VanBrakle,

Secretary.

[FR Doc. 02–4080 Filed 2–19–02; 8:45 am]

BILLING CODE 6730–01–P

FEDERAL MARITIME COMMISSION

Ocean Transportation Intermediary License; Applicants

Notice is hereby given that the following applicants have filed with the Federal Maritime Commission an application for license as Non-Vessel Operating Common Carrier and Ocean Freight Forwarder—Ocean Transportation Intermediary pursuant to section 19 of the Shipping Act of 1984 as amended (46 U.S.C. app. 1718 and 46 CFR part 515).

Persons knowing of any reason why the following applicants should not receive a license are requested to contact the Office of Transportation Intermediaries, Federal Maritime Commission, Washington, DC 20573.

Non-Vessel Operating Common Carrier Ocean Transportation Intermediary Applicants:

Future Maritime Group Inc., 26–15 Parsons Blvd., Unit F, Flushing, NY 11354, *Officers:* Hong Li Han, Vice President, (Qualifying Individual), Shen Yong Zhen, Director.

Spartan Shipping, Inc., 1890 NW 82 Avenue, Suite 110, Miami, FL 33126, *Officer:* Dennis J. Bauman, President, (Qualifying Individual).

Fleischer Freight Services, Inc., 930 W. Hyde Park Blvd., Inglewood, CA 90302, *Officers:* Richard G. Fleischer, Jr., President, (Qualifying Individual), Jacqueline Ann Fleischer, Secretary.

Cala Distribution, L.C., 2279 NW 102 Place, Miami, FL 33172–2523, *Officer:* Ana J. Martinez, Asst. Manager, (Qualifying Individual).

ITLC Corporation, 17337 Ventura Blvd., Suite 200, Encino, CA 91316, *Officer:* Iouri Zdjanski, President, (Qualifying Individual).

Nick International Shipping Inc., dba Olimpia Sandoval, 1841 Carter Avenue, Bronx, NY 10457, *Officers:* Olimpia Sandoval, President, (Qualifying Individual), Nicholas Sandoval, Vice President.

Inter-Cargo, Inc., 1990 NW 95th Avenue, Miami, FL 33172, *Officers:* Flora B. Bofill, President, (Qualifying Individual), Ariana M. Kumpis, Vice President.

Olympiad Line, LLC., PO Box 52, 173 Route 526, Imlaystown, NJ 08526, *Officers:* Wally Kopec, President, (Qualifying Individual), Anthony Marco, Secretary.

Non-Vessel Operating Common Carrier and Ocean Freight Forwarder Transportation Intermediary Applicants

Advanced Global Logistics, LLC, 535 West 34th Street, New York, NY 10001, *Officers:* Michael B. Deitchman, President, (Qualifying Individual), Arthur Solomon, Vice President.

Unitex International Forwarding (HK) Ltd., Room 1505, Premier Center, 20 Cheung Shun St, Cheung Sha Wan-Kowloon, Hong Kong S.A.R. China, *Officers:* Zsang Hing Kwan, Director, (Qualifying Individual), Ngo Kit Wan, Director.

Ocean Freight Forwarder—Ocean Transportation Intermediary Applicant

Alpha Freight & Transport International Inc., 7270 NW 12th Street, Suite 620, Miami, FL 33126, *Officers:* Vilma Martinez, Secretary, (Qualifying Individual), Luis F. Ahumada, President.

Dated: February 14, 2002.

Bryant L. VanBrakle,

Secretary.

[FR Doc. 02–4079 Filed 2–19–02; 8:45 am]

BILLING CODE 6730–01–P

FEDERAL RESERVE SYSTEM

Formations of, Acquisitions by, and Mergers of Bank Holding Companies

The companies listed in this notice have applied to the Board for approval, pursuant to the Bank Holding Company Act of 1956 (12 U.S.C. 1841 *et seq.*) (BHC Act), Regulation Y (12 CFR Part 225), and all other applicable statutes and regulations to become a bank holding company and/or to acquire the assets or the ownership of, control of, or the power to vote shares of a bank or bank holding company and all of the banks and nonbanking companies owned by the bank holding company, including the companies listed below.

The applications listed below, as well as other related filings required by the Board, are available for immediate inspection at the Federal Reserve Bank indicated. The application also will be available for inspection at the offices of the Board of Governors. Interested persons may express their views in writing on the standards enumerated in the BHC Act (12 U.S.C. 1842(c)). If the proposal also involves the acquisition of a nonbanking company, the review also includes whether the acquisition of the nonbanking company complies with the standards in section 4 of the BHC Act (12 U.S.C. 1843). Unless otherwise noted, nonbanking activities will be conducted throughout the United States. Additional information on all bank holding companies may be obtained from the National Information Center website at www.ffiec.gov/nic/.

Unless otherwise noted, comments regarding each of these applications must be received at the Reserve Bank indicated or the offices of the Board of Governors not later than March 15, 2002.

A. Federal Reserve Bank of Philadelphia (Michael E. Collins, Senior Vice President) 100 North 6th Street, Philadelphia, Pennsylvania 19105–1521:

1. Caixa Geral de Depositos, SA, Lisbon, Portugal and CGD USA Holding Company, Inc., New York, New York; to become bank holding companies by acquiring 51 percent of the voting shares of Crown Bank, National Association, Ocean City, New Jersey.

B. Federal Reserve Bank of St. Louis (Randall C. Sumner, Vice President) 411 Locust Street, St. Louis, Missouri 63166–2034:

1. First Staunton Bancshares, Inc., Staunton, Illinois; to acquire 100 percent of the voting shares of Hamel Bancorp, Inc., Hamel, Illinois, and thereby indirectly acquire Hamel State Bank, Hamel, Illinois.

C. Federal Reserve Bank of San Francisco (Maria Villanueva, Consumer Regulation Group) 101 Market Street, San Francisco, California 94105–1579:

1. Wells Fargo & Company, San Francisco, California; to acquire 100 percent of Tejas Bancshares, Inc., Amarillo, Texas, and thereby indirectly acquire Tejas Force, Inc., Wilmington, Delaware, and The First National Bank of Amarillo, Amarillo, Texas.

Board of Governors of the Federal Reserve System, February 13, 2002.

Robert deV. Frierson,

Deputy Secretary of the Board.

[FR Doc. 02–4006 Filed 2–19–02; 8:45 am]

BILLING CODE 6210–01–S

GENERAL SERVICES ADMINISTRATION

Office of Civil Rights; Title VI of the Civil Rights Act of 1964; Limited English Proficiency Policy Guidance for Recipients of Federal Financial Assistance

AGENCY: General Services Administration.

ACTION: Notice of policy guidance with request for comment.

SUMMARY: The General Services Administration (GSA) is republishing for additional public comment, policy guidance on Title VI's prohibition against national origin discrimination as it affects limited English proficient persons.

DATES: *Effective date:* This guidance was effective January 17, 2001. *Comment due date:* Comments must be submitted on or before March 22, 2002. GSA will review all comments and will determine what modifications to the policy guidance, if any, are necessary.

ADDRESSES: Interested persons should submit written comments to the Office of Civil Rights (AK), Room 5127, General Services Administration, 1800 F Street, NW., Washington, DC 20405. Comments may also be submitted by e-mail at *evelyn.britton@gsa.gov,* or facsimile at 202–219–3369.

FOR FURTHER INFORMATION CONTACT: James M. Taylor or K. Evelyn Britton, Office of Civil Rights, Room 5127, General Services Administration, 1800 F Street, NW., Washington, DC 20405, telephone 202–501–0767 or 1–800–662–6376; TDD 1–888–267–7660. Arrangements to receive the policy guidance in an alternative format may be made by contacting the named individuals.

SUPPLEMENTARY INFORMATION: Title VI of the Civil Rights Act of 1964, 42 U.S.C. 2000d, *et seq.* and its implementing regulations provide that no person shall be subjected to discrimination on the basis of race, color, or national origin under any program or activity that receives Federal financial assistance. The purpose of this policy guidance is to clarify the responsibilities of recipients of Federal financial assistance from GSA (''recipients''), and assist them in fulfilling their responsibilities to limited English proficient (LEP) persons, pursuant to Title VI of the Civil Rights Act of 1964 and implementing regulations. This document was originally published on January 17, 2001. (See 66 FR 4026.) The document was based on the policy guidance issued by the Department of Justice entitled ''Enforcement of Title VI of the Civil Rights Act of 1964—National Origin Discrimination Against Persons with Limited English Proficiency'' (65 FR 50123, August 16, 2000). On October 26, 2001, and January 11, 2002, the Assistant Attorney General for Civil Rights issued to Federal departments and agencies guidance memoranda, which reaffirmed the Department of Justice's commitment to ensuring that federally assisted programs and activities fulfill their LEP responsibilities and which clarified and answered certain questions raised

regarding the August 16th publication. GSA is presently reviewing its original January 17, 2001, publication in light of these clarifications to determine whether there is a need to clarify or modify the January 17th guidance. In furtherance of those memoranda, GSA is republishing its guidance for the purpose of obtaining additional public comment. The text of the complete guidance document appears below.

Dated: February 13, 2002.

Madeline Caliendo,

Associate Administrator, Office of Civil Rights, General Services Administration.

Policy Guidance

1. *Subject.* Limited English proficiency policy guidance for recipients of Federal financial assistance

2. *Purpose.* General Services Administration (GSA) provides this policy guidance for its recipients of Federal financial assistance to ensure meaningful access to federally assisted programs and activities for persons with Limited English Proficiency (LEP). This policy guidance does not create new obligations, but rather, clarifies existing responsibilities under Title VI of the Civil Rights Act of 1964, as amended, its implementing regulations and relevant case law.

3. *Dates.* This guidance was effective January 17, 2001. Comments must be submitted on or before March 22, 2002. GSA will review all comments and will determine what modifications to the policy guidance, if any, are necessary.

4. *Policy.* To improve access to federally assisted programs and activities for persons who, as a result of national origin, are limited in their English proficiency.

5. *Action Required.* All recipients of Federal financial assistance from GSA are to develop an effective plan, in writing, for ensuring meaningful access to their programs and activities by LEP persons, consistent with this guidance.

6. *Background Information.* English is the predominant language of the United States. According to the 1990 Census, English is spoken by 95% of its residents. Of those U.S. residents who speak languages other than English at home, the 1990 Census reports that 57% above the age of four speak English ''well to very well.''

The United States is also home to millions of national origin minority individuals who are LEP. That is, their primary language is not English and they cannot speak, read, write or understand the English language at a level that permits them to interact effectively with recipients of Federal financial assistance. Because of language differences and the inability to effectively speak or understand English, persons with LEP may be subject to exclusion from programs or activities, experience delays or denials of services/benefits, or receive care and services/benefits from recipients of Federal financial assistance based on inaccurate or incomplete information.

Executive Order 13166 (65 FR 50119) dated August 11, 2000 and policy guidance issued by Department of Justice (DOJ) on August 11, 2000 (65 FR 50123), address the responsibility of all recipients of Federal financial assistance to ensure meaningful access for persons with LEP. GSA refers to and incorporates DOJ's policy guidance for recipients as part of this policy guidance, and for the purpose of determining compliance with this policy guidance, within the scope of Title VI of the Civil Rights of 1964, as amended, its implementing regulations and relevant case law.

This policy guidance establishes a four-step process that recipients should follow in developing an effective LEP assistance plan. A key element in this process is stakeholder input. Therefore, recipients should coordinate with local community-based organizations (*i.e.,* stakeholders) that represent populations of LEP persons. These organizations can provide valuable input and assistance in identifying and addressing the LEP needs of the serviced population. This coordinated effort will assist in developing a practical approach in providing appropriate LEP assistance that is reasonable and cost-effective.

Some organizations representing LEP persons may include the National Council of La Raza (NCLR), the League of United Latin American Citizens (LULAC), the National Council of Asian Pacific Americans (NCAPA), the Organization of Chinese Americans (OCA), the National Congress of American Indians (NCAI), the National Urban League (NUL), the National Association for the Advancement of Colored People (NAACP), Mexican American Legal Defense and Educational Fund, Arab American Anti-Discrimination Committee and National Coalition for Haitian Rights. This is not meant to be an exhaustive listing, and different community-based or national origin minority organizations may be available in a recipient's serviced area.

7. *Legal Authority.* The legal authority for the Office of Civil Right's (OCR's) enforcement actions is Title VI of the Civil Rights Act of 1964, GSA's implementing regulations, and a consistent body of case law, and is further described below.

Section 601 of Title VI of the Civil Rights Act of 1964, 42 U.S.C. section 2000d *et seq.* states: ''No person in the United States shall on the ground of race, color or national origin, be excluded from participation in, be denied the benefits of, or be subjected to discrimination under any program or activity receiving Federal financial assistance.''

State and local laws may provide additional obligations to serve LEP individuals, but cannot compel recipients of Federal financial assistance to violate Title VI. For instance, given our constitutional structure, State or local ''English-only'' laws do not relieve an entity that receives Federal funding from its responsibilities under Federal anti-discrimination laws. Entities in States and localities with ''English-only'' laws are certainly not required to accept Federal funding—but if they do, they have to comply with Title VI, including its prohibition against national origin discrimination by recipients of Federal assistance. Thus, failing to make federally assisted programs and activities accessible to individuals who are LEP will, in certain circumstances, violate Title VI.

GSA's implementation regulations provide, in part, at 41 CFR 101–6.204–1:

> ''No person in the United States shall, on the ground of race, color, or national origin, be excluded from participation in, be denied the benefits of, or be otherwise subjected to discrimination under any program to which this subpart applies.''

Specific discriminatory actions prohibited are addressed at 41 CFR 101–6.204–2:

> ''(a)(1) In connection with any program to which this subpart applies, a recipient may not, directly or through contractual or other arrangements, on the ground of race, color, or national origin:
>
> (i) Deny an individual any services/benefits, financial aid, or other benefit provided under the program;
>
> (ii) Provide any service, financial aid, or other benefit to any individual which is different, or is provided in a different manner, from that provided to others under the program;
>
> (iii) Subject an individual to segregation or separate treatment in any matter related to his receipt of any service, financial aid, or other benefit under the program;
>
> (iv) Restrict an individual in any way in the enjoyment of any advantage or privilege enjoyed by others receiving any service, financial aid, or other benefit under the program;
>
> (v) Treat an individual differently from others in determining whether he satisfies any admission, enrollment, quota, eligibility, membership or other requirement or condition which individuals must meet in order to be provided any service, financial

aid, or other benefit provided under the program;

(vi) Deny an individual an opportunity to participate in the program through the provision of services or otherwise, or afford him an opportunity to do so which is different from that afforded others under the program* * *''

Furthermore, the DOJ coordination regulations for Title VI, located at 28 CFR 42.405(d)(1), provide that:

''(1) Where a significant number or proportion of the population eligible to be served or likely to be directly affected by a federally assisted program (e.g., affected by relocation) needs service or information in a language other than English in order effectively to be informed of or to participate in the program, the recipient shall take reasonable steps, considering the scope of the program and the size and concentration of such population, to provide information in appropriate languages to such persons. This requirement applies with regard to written material of the type which is ordinarily distributed to the public.''

Extensive case law affirms the obligation of recipients of Federal financial assistance to ensure that persons with LEP can meaningfully access federally assisted programs. Specifically, in the case of *Lau* v. *Nichols,* 414 U.S. 563 (1974), the U.S. Supreme Court ruled that a public school system's failure to provide English language instruction to students of Chinese ancestry who do not speak English denied the students a meaningful opportunity to participate in a public educational program in violation of Title VI of the Civil Rights Act of 1964.

More recently, the Eleventh Circuit in *Sandoval* v. *Hagan,* 197 F.3d 484 (11th Cir. 1999), cert. granted sub. Nom., Alexander v. Sandoval, 147 L. Ed. 2d 1051 (U.S. Sept. 26, 2000) (No. 99–1908), held that the State of Alabama's policy of administering a driver's license examination in English only was a facially neutral practice that had an adverse effect on the basis of national origin, in violation of Title VI. Title VI regulations prohibit both intentional discrimination and policies and practices that appear neutral but have a discriminatory effect. Thus, a recipient's policies or practices regarding the provision of benefits and services to persons with LEP need not be intentional to be discriminatory, but may constitute a violation of Title VI where they have an adverse effect on the ability of national origin minorities to meaningfully access programs and services.

The DOJ states in its policy guidance that Title VI does not require recipients to remove language barriers when English is an essential aspect of the program, or there is another ''substantial legitimate justification for the challenged practice.'' See Footnote 13 of DOJ's policy guidance.

8. *Federal Financial Assistance Programs.* GSA administers two major Federal financial assistance programs, in addition to other programs of Federal financial assistance, such as the direct transfer of personal property and the allotment of space in GSA buildings. The two major programs of Federal financial assistance are the Federal Surplus Personal Property Donation Programs and the Disposal of Federal Surplus Real Property for Public Use.

a. *Federal Surplus Personal Property Donation Program.* Enables certain non-Federal agencies, institutions, organizations and certain small businesses to obtain property that the Federal Government no longer needs. The personal property includes all types and categories of property, such as hand and machine tools, office machines and supplies, furniture, appliances, medical supplies, hardware, clothing, motor vehicles, boats, airplanes, construction equipment, textiles, communications and electronic equipment and gifts or decorations given to Government officials by foreign dignitaries.

(1) Federal surplus personal property may be donated to nonprofit educational and public health activities exempt from taxation under Section 501 of the Internal Revenue Code. The property must be used to aid education or public health, and includes programs for the homeless. Eligible recipients include nonprofit educational and public health activities, such as medical institutions, hospitals, clinics, health centers, and drug abuse treatment centers; schools, colleges and universities; schools for persons with mental or physical disabilities; child care centers; educational radio and televisions licensed by the Federal Communications Commission; museums attended by the public; and libraries. Nonprofit, tax-exempt organizations that provide food, shelter, or support services to homeless people may also be eligible to receive surplus property through the donation program (i.e., soup kitchens, day centers for the homeless, food banks, shelters for battered spouses, half-way houses).

(2) Additionally, public agencies involved in such activities as conservation, economic development, education, park and recreation programs, public safety, public health, programs for the elderly, and programs for the homeless may be eligible for donations of surplus personal property. Public agencies generally include States, their departments, divisions and other instrumentalities; political subdivisions of States, including cities, counties, and other local Government units and economic development districts; instrumentalities created by compact or other agreement between State or political subdivisions; and Indian tribes, bands, groups, pueblos, or communities located on State reservations.

b. *Disposal of Federal Surplus Real Property for Public Use.* Under existing Federal law, States and local government bodies and certain nonprofit institutions may acquire Federal surplus real property at discounts of up to 100% for various types of public use. These uses include: homeless services, airports/ports, correctional, educational, historic monument, parks/recreation, public health and wildlife conservation. These disposals are usually accomplished in coordination with other Federal agencies (i.e., Department of Education (DOE), Department of Health and Human Services (DHHS), Department of Transportation (DOT), Department of Interior (DOI), Department of Housing and Urban Development (HUD).

c. *GSA Personal Property Utilization Program.* Government regulations mandate that Federal agencies, to the fullest extent practicable, use excess personal property as the first source of supply in meeting their requirements. However, certain laws provide Federal agencies with the ability to directly transfer certain excess property to non-Federal entities. For example, Executive Order 12999 (61 FR 17227, 3 CFR, 1996 comp., p. 180) provides that all Federal agencies, to the extent permitted by law, shall give highest preference to schools and nonprofit organizations, including community-based educational organizations, in the transfer of educationally useful Federal equipment. Thus, GSA recipients in this program include schools and certain community-based educational organizations.

d. *Allotment of Space.* Under existing Federal law, GSA may allot space for little or no costs to Federal Credit Unions, vending stands operated by blind persons and child care centers.

9. *Definition of Terms.* The following definitions are provided for reference.

a. *Federal financial assistance:* Grants and loan of Federal funds; grants or donation of Federal property and interests in property; detail of Federal personnel; sale and lease of, and the permission to use (on other than a casual or transient basis) Federal property or any interest in the property without consideration or at a nominal consideration, or at a consideration which is reduced for the purposes of assisting the recipient, or in recognition

of the public interest to be served by the sale or lease to the recipient; or any Federal agreement, arrangement, or other contract which has as one of its purposes the provision of assistance.

b. *Recipient:* Any State or political subdivision, any instrumentality of a State or political subdivision, any public or private agency, institution, organization, or other entity, or any person to which Federal financial assistance is extended, directly or through another recipient, except that such term does not include any ultimate beneficiary of the assistance.

c. *Person with Limited English Proficiency:* A person whose primary language is not English and whose ability to speak, read, write or understand the English language does not permit effective interaction with recipients of Federal financial assistance.

d. *Vital Documents:* A document or information will be considered vital if it contains information that is critical for accessing the recipient's program(s) and/or activities, or is required by law. Thus, vital documents include, for example, applications; consent forms; letters and notices pertaining to the reduction, denial or termination of services or benefits; and letters or notices that require a response from the beneficiary or client. Generally, entire web sites need not be translated. Only the vital information or documents within the web site should be translated. See subparagraph 11b(3) below for further discussion about web sites.

e. *Beneficiary:* Individuals and/or entities that directly or indirectly receive an advantage through the operation of a Federal program, (i.e., one who is within the serviced population of the recipient of Federal financial assistance and who ultimately benefits from those services.)

10. *LEP Procedures and Guidelines.* Executive Order 13166 (65 FR 50119) provides for a flexible standard stating that recipients of Federal financial assistance are to take reasonable steps to ensure meaningful access to their programs and activities by LEP persons. Thus, it is important that all recipients take the following steps in determining their LEP responsibilities and providing appropriate LEP assistance. These four steps are more fully explained below, and include: (1) Conduct an assessment of the serviced population, (2) develop written LEP assistance plans, (3) implement the LEP plan, and (4) monitor the effectiveness of the LEP plan.

a. *Step 1.* Conduct an assessment of the serviced population. This assessment includes identifying the types of service(s) being provided by the recipient and determining the serviced population (i.e., individuals served by the recipient's program(s) and activities).

b. *Step 2.* Develop written LEP assistance plans. These plans should address the recipient's LEP responsibilities and the types of LEP assistance that the recipient will provide, consistent with this policy guidance. Recipients are to develop a written plan based on a balanced analysis of the following four factors, to ensure meaningful access for eligible LEP persons.

(1) *Factor 1: Number or Proportion of LEP Persons.* One factor in determining the reasonableness of a recipient's efforts in providing LEP assistance is the number or proportion of people who will be excluded from the benefits or services absent efforts to remove language barriers. The key here is to focus on persons who are eligible to access the recipient's program or activity.

The steps reasonable for a recipient that serves one LEP person a year may be different than those expected of a recipient that serves several LEP persons per day. However, those who serve a few are still subject to the requirements of Title VI of the Civil Rights Act of 1964 and Executive Order 13166 (65 FR 50119). This plan need not be intricate, and may be as simple as being prepared to use one of the commercially available language lines to obtain interpreter services within a reasonable period of time.

Methods of obtaining estimates of serviced LEP population include taking a census of contacts with LEP persons over a given period of time or using demographic data of the service area. The 1990 U. S. Census information may be found at a local library or on the Internet at www.Census.gov. The 2000 Census data may not be available until the 2001–02 timeframe. In addition to the U. S. Census, other potential resources include State and local government offices; the Mayor's office; the local school superintendent's office; the State education department; the State social services department, and local hospitals; or other elected officials offices. Combining these methods will probably result in the most realistic and accurate estimates.

Local or State Yellow Pages may also be helpful in identifying organizations that serve or represent particular language minority populations. Local national origin minority organizations may be able to provide, or assist in obtaining, certain demographic information regarding LEP populations in the local area. The information that can be obtained and the network established in coordinating this type of effort with members of local and State government offices and minority organizations may prove to be valuable resources for recipients into the future.

(2) *Factor 2: Frequency of Contact with the Program.* Frequency of contacts between the recipient's program or activity and LEP persons is another factor to be weighed. For example, if LEP persons must access the program or activity on a daily basis, the recipient has a greater LEP responsibility than if such contact is unpredictable or infrequent. Recipients should take into account local or regional conditions when determining frequency of contact.

Although past experience may be helpful in determining the frequency of contact, it should not be used as the exclusive criteria since the lack of prior LEP notice and assistance may have contributed to such minimal or non-existent contact.

(3) *Factor 3: Nature and Importance of the Program.* The importance of the services or benefits provided to the beneficiaries will affect the determination of the reasonable steps required. More affirmative steps are required in those programs where the denial or delay of access may have life or death implications than in programs that are not as crucial to one's day-to-day existence. For example, fire protection services are of more importance to the serviced population than access to a museum.

Recipients must also consider the importance of the program or activity to the eligible LEP population, both immediately, as well as the long-term. (*i.e.,* what is the short-term and long-term impact to the LEP population if translation assistance is not provided?)

(4) *Factor 4: Resources Available.* The resources available to a recipient of Federal financial assistance may impact the steps that recipients take. For example, a small recipient with limited resources may not need to take the same steps as a larger recipient to provide LEP assistance in programs that have a limited number of eligible LEP persons or where the contact is infrequent. However, small recipients are still subject to this policy guidance, although the type of LEP mitigation measures may differ from that of larger recipients. Claims of limited resources from larger entities should be well substantiated.

A recipient that has limited resources may consider exploring whether State and local government offices provide translation assistance. These offices may provide resources for the recipient's use.

Also, recipients may consider contacting local minority organizations for possible translation assistance.

c. *Step 3:* Implement the LEP plan. The key to successful implementation of an effective LEP assistance plan is to ensure that the serviced population is notified regarding the availability of free LEP assistance. Also, it is important that a recipient's staff is aware of LEP responsibilities and the recipient's LEP assistance plan.

(1) Notice of LEP assistance to be provided. Each recipient of Federal financial assistance is to notify the public of available LEP assistance at no cost to the LEP person. This may be done through a brochure or poster in the language(s) identified in the location(s) where the recipient's federally assisted service(s) and/or benefits are being provided. Posters should be placed in a conspicuous place to ensure LEP persons will see it. It may also include posting such notice on the recipient's internet site(s). Sample language to use for such notice is as follows: ''Language assistance is available upon request if you cannot speak or write English very well.''

(2) Ensure staff is aware of LEP responsibilities. Recipients are to ensure that GSA's policy regarding LEP responsibilities is communicated to all staff members whose duties may bring them in contact with LEP persons accessing the services and/or benefits of the recipient. This communication should ensure an understanding of the types of LEP assistance being offered by the recipient, and the mechanisms in place for the staff to use when a request for LEP assistance is made.

d. *Step 4:* Monitor the effectiveness of the LEP plan. LEP assistance requirements may change over a period of time. Therefore, it is important to regularly monitor, and when appropriate, adjust the LEP procedures to ensure meaningful access for persons with LEP. New programs, activities, forms, outreach documents, etc. should be considered for translation services as they arise. In addition, to be effective, it is crucial for recipients to re-assess language assistance services at least every three years to determine the effectiveness of existing assistance. This assessment should include a review of LEP policies and procedures (i.e., the LEP plan) with the recipient's staff. Feedback from LEP persons and community-based organizations will also provide helpful insights into the effectiveness of LEP assistance procedures.

11. *Translation Requirements.* In determining what is reasonable, the analysis should address the appropriate mix of written and oral language assistance. This includes information provided using the Internet, video and audio. When applying the four factors as outlined above, decisions should be made regarding which documents must be translated, when is oral translation necessary and whether such assistance (*i.e.,* oral or written translation) should be immediately available or provided within a reasonable period of time.

a. *Oral Communication:* Depending on the need, options for providing oral language assistance range from hiring bilingual staff or on-staff interpreters to contracting for interpreter services as needed, engaging community volunteers, or contracting with a telephone interpreter services. Oral communication between recipients and beneficiaries often is a necessary part of the exchange of information. Proper analysis should include looking at what kind of communication (oral or written) you normally provide to an English speaking person in order to fully communicate the program to them. Thus, there may be instances where simply providing written translation may not be providing meaningful access to persons with LEP in the same manner as that provided to non-LEP beneficiaries.

b. *Written Communication:* As part of its overall language assistance program, a recipient's LEP assistance plan should provide for the translation of certain written materials in languages other than English, where a significant number or percentage of the population eligible to be served or likely to be directly affected by the program, needs services or information in a language other than English to communicate effectively. See 28 CFR 42.405(d)(1).

(1) In determining what should be translated, identify vital documents and non-vital documents. Vital documents must be translated when a significant number or percentage of the population eligible to be served, or likely to be directly affected by the recipient's program(s) or activities, seeks services or information in a language other than English to communicate effectively. For many larger documents, translation of vital information contained within the document will suffice and the documents need not be translated in their entirety. Non-vital documents/information need not be translated.

(2) OCR recognizes that it may sometimes be difficult to draw a distinction between vital and non-vital documents, particularly when considering outreach or awareness documents. Although meaningful access to a program or activity requires an awareness of the program's existence, OCR recognizes that it would be impossible, from a practical and cost-based perspective, to translate every piece of outreach material into every language. Title VI does not require this of its recipients. However, lack of awareness regarding the existence of a particular program may effectively deny LEP persons meaningful access. Thus, it is important that recipients continually survey and assess the needs of the eligible serviced populations in order to determine whether certain critical outreach materials should be translated into other languages.

(3) The same analysis is to be used in determining the translation of web site information, forms, etc. The decision to place a document or information on the Internet will not affect whether the document or information must be translated. For example, placement on the web site should not change the recipient's original assessment regarding the number or proportion of LEP persons that comprise the intended audience for that document or information. Generally, entire web sites need not be translated. Only the vital information or documents within the web site should be translated. The four-factor analysis as outlined above determines the appropriate language(s) for translation. If the four-factor analysis determines that written information or a document should be translated, the same written document or information should be translated on the recipient's web siteu if the recipient's English version of the information or document is on the web site. A notice regarding the presence of a translated document or information on the web site should be posted at an initial entry point onto the site (usually the homepage).

(4) Oral translation assistance will be provided to those persons with LEP whose language does not exist in written form. This oral translation assistance will explain the contents of vital documents.

c. *Reliability of Translation Resources and Interpretive Services:* In order to provide effective services to LEP persons, it is important to ensure the use of competent interpreters. Although it is not a requirement, membership in or accreditation by the American Translators Association (ATA) is one indicator regarding the reliability and professionalism of language assistance vendors. However, competency does not necessarily mean formal certification as an interpreter, although certification is helpful. Yet, competency refers to more than being bilingual. It refers to demonstrated proficiency in both English and the other language, orientation and training that includes

the skills and ethics of interpreting (*i.e.,* issues of confidentiality), fundamental knowledge in both languages of terms or concepts peculiar to the program or activity, and sensitivity to the LEP person's culture.

It is also important to note that in some circumstances, verbatim translation of materials may not accurately and appropriately convey the substance of what is contained in the written language. An effective way to address this concern is to reach out to community-based organizations to review translated materials to ensure that the translation is accurate and easily understood by LEP persons.

It is recommended that a different contractor conduct a second review of a translated document, when such document is of a highly technical or complex nature. Another method of ensuring reliability of such documents is to have the document translated back into English to determine if the source document lost important meaning in its foreign translation.

Generally, it is not acceptable for recipients to rely upon an LEP individual's family members or friends to provide the interpreter services. The recipient should meet its obligations under Title VI by supplying competent language services free of cost. In rare emergency situations, the recipient may have to rely on an LEP person's family members or other persons whose language skills and competency in interpreting have not been established. Proper planning by recipients is important in order to ensure that those situations rarely occur. Therefore, it is not acceptable to rely upon an LEP person to provide his/her own interpreter, unless the LEP person requests the use of his/her own interpreter or in the case of an emergency.

12. *Examples.* The following examples are being provided to facilitate the assessment, planning and implementation of a successful LEP plan.

a. *Examples of problem areas include:* Providing services and/or benefits to LEP persons that are more limited in scope or lower in quality than those provided to other individuals; subjecting LEP persons to unreasonable delays; limiting participation in a recipient's program(s) or activities on the basis of English proficiency; providing services and/or benefits to LEP persons that are not as effective as those provided to persons proficient in English; failing to inform LEP persons of the right to receive free interpreter services; or requiring LEP persons to provide their own interpreter.

b. *Examples of satisfactory LEP assistance include:* Having policies and procedures in place for identifying and assessing the language needs of the recipient's serviced LEP population; providing a range of oral language assistance options, appropriate to each of the recipient's circumstances; providing notice to LEP persons of the right to free language services; communicating LEP responsibilities and available services to staff members; program monitoring; establishing a plan for providing written materials in languages other than English where a significant number or percentage of the affected population needs services or information in a language other than English.

c. *Examples of applying the 4 factors:* The following are examples of how meaningful access will be assessed by OCR:

(1) *Example 1.* A small child care center has three LEP parents (two who are Chinese and one who is Cuban) whose English-speaking children attend its child care center on a regular basis. The center has a staff of six, and has limited financial resources to afford to hire bilingual staff, contract with a professional interpreter service, or translate written documents. To accommodate the language needs of their LEP parents, the Center made arrangements with a Chinese and a Hispanic community organization for trained and competent volunteer interpreters, and with a telephone interpreter language line, to interpret during parent meetings and to orally translate written documents. There have been no client complaints of inordinate delays or other service related problems with respect to LEP clients.

Application of the 4 factors to Example 1: Factor 1: The center has three LEP parents (a small number); *Factor 2:* The frequency of contact is every day, but mostly for greeting; *Factor 3:* The nature and importance of the recipient's program to the serviced population relates to the health, safety and welfare of their children (i.e., child care); *Factor 4:* The child care center has limited resources and a small staff.

The assistance that the child care center is providing will probably be considered appropriate, given the center's resources, the size of staff, and the size of the LEP population. Thus, OCR would find the center in compliance with Title VI.

(2) *Example 2.* A county social service program has a large budget and serves 500,000 beneficiaries. Of the beneficiaries eligible for its services/benefits, 3,500 are LEP Chinese persons, 4,000 are LEP Hispanic persons, 2000 are LEP Vietnamese persons and about 400 are LEP Laotian persons. The county frequently encounters an LEP client, but has no policy regarding language assistance to LEP persons other than telling LEP clients to bring their own interpreters. LEP clients are provided with application and consent forms in English and, if unaccompanied by their own interpreters, must solicit the help of other clients or must return at a later date with an interpreter.

Application of the 4 factors to Example 2: Factor 1: The eligible LEP population is significant; *Factor 2:* The frequency of contact is frequent; *Factor 3:* The nature and importance of the county's program relates to the social welfare of the community it serves; *Factor 4:* The county has a large budget.

Given the size of the county program, its resources, the size of the eligible LEP population, the frequency of contact and the nature of the program, OCR would likely find the county in violation of Title VI and would require it to develop a comprehensive language assistance program.

d. The intent of this guidance is to provide recipients with information regarding the requirements of Title VI and its implementing regulations for providing meaningful access for LEP persons to federally assisted services and/or benefits. The examples and framework outlined above are not intended to be exhaustive. Thus, recipients have considerable flexibility in determining how to comply with their legal obligation in meeting their LEP responsibilities, and are not required to use all of the suggested methods and options listed. However, recipients must establish and implement policies and procedures for providing language assistance sufficient to fulfill their Title VI responsibilities.

13. *Compliance.* All recipients must take reasonable steps (consistent with this policy guidance) to overcome language differences that result in barriers and provide the language assistance needed to ensure that persons with LEP have meaningful access to services and benefits.

a. The failure to take all of the steps as outlined herein will not necessarily mean that a recipient has failed to provide meaningful access to LEP persons. OCR will make assessments on a case by case basis and will consider several factors in determining whether the steps taken by a recipient provide meaningful access. (i.e., nature and importance of recipient's services to the serviced population, recipient's size, availability of financial and other resources, and frequency of contact with LEP persons).

b. Those factors include the size of the recipient and the eligible LEP population, the nature of the program or service, the objectives of the program, the total resources available, the frequency with which particular languages are encountered, and the frequency with which LEP persons come into contact with the recipient's program.

c. There are instances where recipients of Federal financial assistance from GSA may also be recipients of Federal financial assistance from other Federal agencies. For instance, hospitals and health clinics may receive financial assistance from the Department of Health and Human Services (DHHS); schools and universities may receive financial assistance from the Department of Education (DOE); police departments and other law enforcement agencies/organizations may receive financial assistance from the Department of Justice (DOJ). In order to avoid the potential for confusion with such recipient organizations as to their LEP responsibilities, OCR will apply, where appropriate, the Federal agency's LEP guidance that is more specific and/or stringent regarding LEP responsibilities and assistance.

14. *Enforcement.* OCR will enforce Title VI, and the recipient's responsibility to establish LEP procedures and provide appropriate LEP assistance, consistent with enforcement procedures as provided in Title VI regulations. These procedures include complaint investigations, compliance reviews, efforts to secure voluntary compliance, and technical assistance.

GSA's Title VI regulations provide that OCR will investigate whenever it receives a complaint, report or other information that alleges or indicates possible noncompliance with Title VI. If the investigation results in a finding of compliance, OCR will inform the recipient in writing of this determination, including the basis for the determination. If the investigation results in a finding of noncompliance, OCR will inform the recipient of the noncompliance through a Letter of Findings that identifies the areas of noncompliance and the steps that must be taken to correct the noncompliance, and will attempt to secure voluntary compliance through informal means. If the matter cannot be resolved informally, the procedure for effecting compliance as described at 41 CFR 101–6.211–2, *et seq.* will be followed.

15. *Technical Assistance.* A program of language assistance should provide for effective communication between the recipient and the person with LEP so as to facilitate participation in, and meaningful access to the services and/or benefits provided by the recipient. The key to ensuring meaningful access for LEP persons is effective communication.

OCR is available to provide assistance to recipients seeking to ensure that they operate an effective language assistance program. In addition, during its investigative process, OCR is available to provide technical assistance to enable recipients to come into voluntary compliance. OCR may be reached at 202–501–0767 or toll free 1–800–662–6376, or by mail at General Services Administration, Office of Civil Rights, Title VI, 1800 F Street NW., Suite 5127, Washington, DC, 20405, for further assistance. Arrangements to receive this policy guidance in alternative format may be made by contacting OCR.

[FR Doc. 02–4013 Filed 2–19–02; 8:45 am]

BILLING CODE 6820–34–P

DEPARTMENT OF HEALTH AND HUMAN SERVICES

Meeting of the Secretary's Advisory Committee on Regulatory Reform

AGENCY: Office of the Assistant Secretary for Planning and Evaluation, Department of Health and Human Services.

ACTION: Notice of meeting—AMENDED.

SUMMARY: Notice is hereby given of a public hearing by the Department of Health and Human Services (HHS) Secretary's Advisory Committee on Regulatory Reform. This amended notice includes the exact address for the hearing. As governed by the Federal Advisory Committee Act in accordance with Section 10(a)(2), the Secretary's Advisory Committee on Regulatory Reform is seeking guidance for the Department's efforts to streamline regulatory requirements. The Advisory Committee will advise and make recommendations for changes that would be beneficial in four broad areas: health care delivery, health systems operations, biomedical and health research, and the development of pharmaceuticals and other products. The Committee will review changes identified through regional public hearings, written comments from the public, and consultation with HHS staff.

All meetings and hearings of the Committee are open to the general public. During each meeting, invited witnesses will address how regulations affect health-related issues. Meeting agendas will also allow some time for public comment. Additional information on each meeting's agenda and list of participating witnesses will be posted on the Committee's Web site prior to the meetings *(http://www.regreform.hhs.gov).*

DATES: The first public hearing of the Secretary's Advisory Committee on Regulatory Reform will be held on Monday, February 25, 2002, from 9:00 a.m. to 5:00 p.m. and on Tuesday, February 26, 2002, from 9:00 a.m. to 1:00 p.m.

ADDRESSES: The hearing will be held at the Hyatt Regency Miami in Miami, Florida. The address is 400 SE 2nd Avenue, Miami, FL 33131.

FOR FURTHER INFORMATION CONTACT: Christy Schmidt, Executive Coordinator, Secretary's Advisory Committee on regulatory Reform, Office of the Assistant Secretary for Planning and Evaluation, 200 Independence Avenue, SW., Room 344G, Washington, DC, 20201, (202) 401–5182.

SUPPLEMENTARY INFORMATION: The Hyatt Regency Miami is in compliance with the Americans with Disabilities Act. Anyone planning to attend the meeting who requires special disability-related arrangements such as sign-language interpretation should provide notice of their need by Thursday, February 21, 2002. Please make any request to Michael Starkweather—phone: 301–628–3141; fax: 301–628–3101; email: *mstarkweather@s–3.com.*

On June 8, 2001, HHS Secretary Thompson announced a Department-wide initiative to reduce regulatory burdens in health care, to improve patient care, and to respond to the concerns of health care providers and industry, State and local Governments, and individual Americans who are affected by HHS rules. Common sense approaches; and careful balancing of needs can help improve patient care. As part of this initiative, the Department is establishing the Secretary's Advisory Committee on Regulatory Reform to provide findings and recommendations regarding potential regulatory changes. These changes would enable HHS programs to reduce burdens and costs associated with departmental regulations and paperwork, while at the same time maintaining or enhancing the effectiveness, efficiency, impact, and access of HHS programs.

Dated: February 7, 2002.

William Raub,

Deputy Assistant Secretary for Planning and Evaluation.

[FR Doc. 02–3985 Filed 2–19–02; 8:45 am]

BILLING CODE 4151–05–M

DEPARTMENT OF HEALTH AND HUMAN SERVICES

Centers for Disease Control and Prevention (CDC)

Clinical Laboratory Improvement Advisory Committee: Notice of Charter Renewal

This gives notice under the Federal Advisory Committee Act (Pub. L. 92–463) of October 6, 1972, that the Clinical Laboratory Improvement Advisory Committee, of the Centers for Disease Control and Prevention (CDC), of the Department of Health and Human Services, has been renewed for a 2-year period extending through February 19, 2004.

FOR FURTHER INFORMATION CONTACT: Edward L. Baker, M.D., Executive Secretary, Clinical Laboratory Improvement Advisory Committee, CDC, 4770 Buford Hwy, NE, m/s K–36, Atlanta, Georgia 30333. Telephone 770/488–2402, fax 770/488–2420, e-mail *elb1@cdc.gov*.

The Director, Management Analysis and Services Office, has been delegated the authority to sign **Federal Register** notices pertaining to announcements of meetings and other committee management activities, for both the Centers for Disease Control and Prevention and the Agency for Toxic Substances and Disease Registry.

Dated: February 13, 2002.

Alvin Hall,

Acting Director, Management Analysis and Services Office, Centers for Disease Control and Prevention.

[FR Doc. 02–4024 Filed 2–19–02; 8:45 am]

BILLING CODE 4163–18–P

DEPARTMENT OF HEALTH AND HUMAN SERVICES

Centers for Disease Control and Prevention

Board of Scientific Counselors Meeting, National Institute for Occupational Safety and Health: Meeting

In accordance with section 10(a)(2) of the Federal Advisory Committee Act (Pub. L. 92–463), the Centers for Disease Control and Prevention (CDC) announces the following committee meeting:

Name: Board of Scientific Counselors, National Institute for Occupational Safety and Health (BSC, NIOSH).

Time and Date: 9 a.m.—3 p.m., March 7, 2002.

Place: Washington Court Hotel on Capitol Hill, 525 New Jersey Avenue, NW., Washington, DC 20001, telephone 202/628–2100, fax 202/879–7938.

Status: Open to the public, limited only by the space available. The meeting room accommodates approximately 50 people.

Purpose: The Secretary, the Assistant Secretary for Health, and by delegation the Director, Centers for Disease Control and Prevention, are authorized under Sections 301 and 308 of the Public Health Service Act to conduct directly or by grants or contracts, research, experiments, and demonstrations relating to occupational safety and health and to mine health. The Board of Scientific Counselors shall provide guidance to the Director, National Institute for Occupational Safety and Health, on research and preventions programs. Specifically, the Board shall provide guidance on the Institute's research activities related to developing and evaluating hypotheses, systematically documenting findings and disseminating results. The Board shall evaluate the degree to which the activities of the National Institute for Occupational Safety and Health: (1) Conform to appropriate scientific standards, (2) address current, relevant needs, and (3) produce intended results.

Matters to be Discussed: Agenda items include a report from the Acting Director of NIOSH; Update on NIOSH/NCI Diesel Exposure Study; Final Report from the BSC Beryllium Subcommittee; Workplace Violence Prevention Research and Planning; Update on the National Personal Protective Technologies Laboratory.

Agenda items are subject to change as priorities dictate.

FOR MORE INFORMATION CONTACT: Roger Rosa, Executive Secretary, BSC, NIOSH, CDC, 200 Independence Avenue, SW., Room 715H, Washington, DC 20201, telephone: 202/205–7856, fax: 202/260–4464.

The Director, Management Analysis and Services Office, has been delegated the authority to sign **Federal Register** notices pertaining to announcements of meetings and other committee management activities for both the Centers for Disease Control and Prevention and the Agency for Toxic Substances and Disease Registry.

Dated: February 13, 2002.

Alvin Hall,

Acting Director, Management Analysis and Services Office, Centers for Disease Control and Prevention.

[FR Doc. 02–4023 Filed 2–19–02; 8:45 am]

BILLING CODE 4163–19–P

DEPARTMENT OF HEALTH AND HUMAN SERVICES

Centers for Disease Control and Prevention

Public Meeting Between CDC and the Cruise Ship Industry, Private Sanitation Consultants and Other Interested Parties

The National Center for Environmental Health (NCEH) of the Centers for Disease Control and Prevention (CDC) announces the following meeting.

Name: Current Status of the Vessel Sanitation Program (VSP) and Experience to Date with Program Operations—Public meeting between CDC and the cruise ship industry, private sanitation consultants, and other interested parties.

Time and Date: 9 a.m.–1 p.m., April 17, 2002.

Place: Auditorium, Port Everglades Administration Building, 1850 Eller Drive, Fort Lauderdale, Florida 33316. Telephone (954)356–6650; Fax (954)356–6671.

Status: Open to the public, limited by the space available. The meeting room accommodates approximately 100 people.

Purpose: During the past 15 years, as part of the revised VSP, CDC has conducted a series of public meetings with members of the cruise ship industry, private sanitation consultants, and other interested parties.

This meeting is a continuation of that series of public meetings to discuss current status of the VSP and experience to date with program operations.

Matters to be Discussed: Agenda items will include VSP Program Update; 2001 Program Review; Update on the implementation of the VSP Program Operations Manual 2000; Update on Disease Surveillance and Outbreak Investigations; and VSP Training Seminars.

For a period of 15 days following the meeting, through May 2, 2002, the official record of the meeting will remain open so that additional materials or comments may be submitted to be made part of the record of the meeting. Advanced registration for the meeting is encouraged. Please provide the following information: Name, title, company name, mailing address, telephone number, facsimile number and e-mail address to Dorothy Johnson, facsimile (770)488–4127 or e-mail: *DJJohnson@cdc.gov*.

FOR MORE INFORMATION CONTACT: Dave Forney, Chief, VSP, NCEH, CDC, 4770 Buford Highway, NE, M/S F–16, Atlanta, Georgia 30341–3724, telephone (770)488–7333, e-mail: *DForney@cdc.gov*.

The Director, Management Analysis and Services Office, has been delegated the authority to sign **Federal Register** notices pertaining to announcements of meetings and other committee management activities for both the Centers for Disease Control and

Prevention and the Agency for Toxic Substances and Disease Registry.

Dated: February 13, 2002.

Alvin Hall,

Acting Director, Management Analysis and Services Office, Centers for Disease Control and Prevention.

[FR Doc. 02–4022 Filed 2–19–02; 8:45 am]

BILLING CODE 4163–18–P

DEPARTMENT OF HEALTH AND HUMAN SERVICES

Food and Drug Administration

[Docket No. 00N–1571]

Enrofloxacin for Poultry; Notice of Hearing

AGENCY: Food and Drug Administration, HHS.

ACTION: Notice.

SUMMARY: The Food and Drug Administration (FDA) is announcing a hearing on a proposal to withdraw approval of a new animal drug application (NADA). In the **Federal Register** of October 31, 2000 (65 FR 64954), the Director of FDA's Center for Veterinary Medicine (CVM) issued a notice of opportunity for a hearing (NOOH) proposing to withdraw approval of NADA 140–828 for enrofloxacin (Baytril 3.23% Concentrate Antimicrobial Solution). Bayer Corp., the sponsor of the new animal drug, responded by filing a request for a hearing on November 29, 2000.

This notice of hearing (NOH) provides factual and legal information concerning CVM's proposal to withdraw the NADA and identifies the factual issues that will be the subject of the evidentiary hearing.

DATES: A prehearing conference will be held on April 8, 2002, beginning at 10 a.m. Any person wishing to participate in this hearing shall submit a written notice of participation by March 22, 2002. Disclosure of data and information as required by part 12 (21 CFR part 12) must be made by April 22, 2002.

ADDRESSES: The prehearing conference will be held in conference room. F, 5600 Fishers Lane, Rockville, MD 20857. You must submit written notices of participation and disclosure of data and information to Dockets Management Branch (HFA–305), Food and Drug Administration, 5630 Fishers Lane, rm. 1061, Rockville, MD 20852. All submissions must reference docket number 00N–1571.

FOR FURTHER INFORMATION CONTACT: Robin Thomas Johnson, Office of Policy (HF–26), Food and Drug Administration, 5600 Fishers Lane, Rockville, MD 20857, 301–827–3480.

SUPPLEMENTARY INFORMATION:

I. Background

Enrofloxacin belongs to the class of antimicrobial drugs called fluoroquinolones. Fluoroquinolones are used in humans and animals for therapeutic purposes. Bayer Corp., P.O. Box 390, Shawnee Mission, KS 66201–0390, sponsor of NADA 140–828 for enrofloxacin (also known under Bayer's product name ''Baytril'') was approved for use in poultry on October 4, 1996, and published on November 5, 1996 (61 FR 56892). The new animal drug is indicated for the control, in chickens, of mortality associated with *Escherichia coli (E. coli)* susceptible to enrofloxacin. It is indicated for the control, in turkeys, of mortality associated with *E. coli* and *Pasteurella multocida (P. multocida)* susceptible to enrofloxacin.

II. Statutory Grounds Proposed for Withdrawal of the NADA for Enrofloxacin

In the NOOH published on October 31, 2000 (as revised on January 22, 2001), CVM proposed to withdraw approval of NADA 140–828 for use in poultry under section 512(e)(1)(B) of the Federal Food, Drug, and Cosmetic Act (the act) (21 U.S. C. 360b(e)(1)(B)) . Section 512(e)(1)(B) states:

> (e)(1) The Secretary shall, after due notice and opportunity for hearing to the applicant, issue an order withdrawing approval of an application filed pursuant to subsection (b) with respect to any new animal drug if the Secretary finds —
>
> * * * * *
>
> (B) that new evidence not contained in such application or not available to the Secretary until after such application was approved, or tests by new methods, or tests by methods not deemed reasonably applicable when such application was approved, evaluated together with the evidence available to the Secretary when the application was approved, shows that such drug is not shown to be safe for use under the conditions of use upon the basis of which the application was approved or that subparagraph (I) of paragraph (1) of subsection (d) applies to such drug.

CVM must provide a reasonable basis from which serious questions about the ultimate safety of the drug may be inferred. "'Serious questions' can be raised where the evidence is not conclusive, but merely suggestive of an adverse effect.'' (See 44 FR 54852 at 54861, September 21, l979 (Commissioner's DES Decision.) Once CVM provides a basis for questioning the safety of enrofloxacin, the sponsor will have the ultimate burden of showing the drug's safety. *See Rhone-Poulenc, Inc., Hess & Clark Div.* v. *FDA*, 636 F.2d 750 (D.C. Cir. 1980); 21 CFR 12.87(d); 44 FR 54852 at 54861, September 21, l979 (Commissioner's DES Decision); 49 FR 34965, September 4, 1984 (Notice of Hearing for Nitrofurazone); and, 56 FR 41902, August 23, 1991 (Commissioner's Nitrofurans Decision).

III. Summary of the Evidence

In accordance with FDA's procedural regulations (§ 12.85) CVM has placed on file with the Dockets Management Branch (address above) copies of all documents in the CVM Director's files containing factual information relating to the issues involved in the hearing, and a narrative statement summarizing the evidence CVM plans to introduce at the hearing. For the benefit of those who are unable to inspect those documents, the information placed on file by CVM is summarized below.

The primary factual issues at the hearing will be whether there is a reasonable basis from which serious questions about the safety of enrofloxacin use in poultry may be inferred, and, if so, whether the use of enrofloxacin under the approved conditions of use in poultry has been shown to be safe. This action is based on CVM's determination that the use of fluoroquinolones in poultry causes the development of fluoroquinolone-resistant *Campylobacter* spp., a human pathogen, in poultry; that this fluoroquinolone-resistant *Campylobacter* spp. is transferred to humans and is a significant cause of the development of fluoroquinolone-resistant *Campylobacter* infections in humans; and thatfluoroquinolone-resistant *Campylobacter* infections in humans are a human health hazard. (See 65 FR 64954.)

CVM has concluded, based on data from surveillance programs, published literature, and other sources, that the use of fluoroquinolones in poultry is a significant cause of fluoroquinolone-resistant *Campylobacter* on poultry carcasses and therefore a significant cause of fluoroquinolone-resistant *Campylobacter* infections in humans. This conclusion is supported by data establishing a temporal association between approval of fluoroquinolones for use in poultry and an increase influoroquinolone-resistant *Campylobacter* infections in humans; by a comparison of fluoroquinolone use in poultry with other possible cause of fluoroquinolone-resistant human infections; and a risk assessment that determined that in 1999, a mean estimate of 9,261 persons infected with campylobacteriosis and prescribed a

fluoroquinolone in the United States would have had a fluoroquinolone-resistant illness due to the use of fluoroquinolones in chickens.

CVM believes that such people are likely to have had prolonged illnesses or complications. CVM concluded that development of resistance to fluorquinolones among *Campylobacter* has important consequences for human health since patients with severe enteric disease such as campylobacteriosis are usually treated empirically. CVM believes that *Campylobacter* resistance presents a dilemma for the physician. If fluoroquinolone treatment is given based on symptoms, and the patient is infected with fluoroquinolone-resistant *Campylobacter* spp., there is a risk that the treatment will not be effective, or will be less effective, and valuable time will be lost. If treatment is delayed until the causative organism and susceptibility are confirmed by a medical laboratory, again valuable time will be lost. In these situations, the disease may be prolonged or result in complications, especially in vulnerable patients with underlying health problems.

IV. Conclusion

Upon review of Bayer Corp.'s response to the NOOH, the Acting Principal Deputy Commissioner concludes that a hearing is appropriate with respect to CVM's proposal to withdraw approval of the NADA for enrofloxacin. The issue at the hearing will be as follows:

Whether new evidence shows that enrofloxacin is not now shown to be safe for use under the conditions of use upon the basis of which the application was approved. This issue includes:

A. Whether there is a reasonable basis from which serious questions about the safety of enrofloxacin use in poultry may be inferred, such as:

1. Whether enrofloxacin use in poultry acts as a selection pressure, resulting in the emergence and dissemination of fluoroquinolone-resistant *Campylobacter* spp. In poultry?

2. Whether fluoroquinolone-resistant *Campylobacter* spp. in poultry are transferred to humans and whether they contribute to fluoroquinolone-resistant *Campylobacter* infections in humans?

3. Whether fluoroquinolone-resistant *Campylobacter* infections in humans have the potential to adversely affect human health?

B. Whether the use of enrofloxacin under the approved conditions of use in poultry has been shown to be safe?

The hearing on these issues will take place in FDA conference room F. Administrative Law Judge Daniel J. Davidson will preside. Parties to the hearing will be CVM and Bayer Corp., the sponsor of the NADA for enrofloxacin. Any other interested person may participate in the hearing and be accorded the rights granted to participants by FDA regulations. Participants are required to assume the obligations of participation as set forth in FDA regulations (see part 12). Written notices of participation shall be filed with the Dockets Management Branch no later than March 22, 2002 (see § 12.45). A notice of participation shall be identified with the docket number found in brackets in the heading of this document and clearly labeled ''Enrofloxacin Hearing.''

A prehearing conference will be held on April 8, 2002. All participants are required both to attend the prehearing conference and to be prepared to comply with § 12.92, which sets forth the procedure and matters to be considered at such conference.

As discussed above, CVM has filed with the Dockets Management Branch a narrative statement setting forth its position on the hearing issues and a detailed factual description of the evidentiary background upon which it intends to rely at the hearing. CVM has also filed with the Dockets Management Branch the other documents required by § 12.85, including copies of the relevant portions of NADA, published studies, and other data, bearing on the question of whether enrofloxacin has been shown to be safe for use under the conditions of use upon the basis of which the application was approved. Interested persons may obtain a copy of the narrative statement from the Dockets Management Branch. With the exception of any data withheld from public disclosure under the provisions of 21 CFR 10.20(j), 21 U.S.C. 331(j), or 18 U.S.C. 1905, the data described above may also be examined at the Dockets Management Branch between 9 a.m. to 4 p.m., Monday through Friday. Bayer Corp. shall submit all the written data and information requiredby § 12.85 by April 22, 2002. All other participants shall submit all written data and information required by§ 12.85 by April 22, 2002. Any request to extend the period for submission of the required materials or for a postponement of the scheduled prehearing conference shall be addressed to the Administrative Law Judge.

The prehearing conference and the hearing will be open to the public. Any participants may appear in person, or by or with counsel, or with other qualified representatives, and may be heard on relevant matters.

Because this is a public hearing, it is subject to our guideline concerning the policy and procedures for electronic media coverage of public agency administrative proceedings. This guideline was published in the **Federal Register** on April 13, 1984 (49 FR 14723). These procedures are primarily intended to expedite media access to our public proceedings, including formal evidentiary hearings conducted under part 12 of the agency's regulations. Under this guideline, representatives of the electronic media may be permitted, subject to certain limitations, to videotape, film, or otherwise record our public administrative proceedings, including the testimony of witnesses in the proceedings. Accordingly, the parties and nonparty participants to this hearing, and all other interested persons, are directed to the guideline, for a more complete explanation of the guideline's effect on this hearing.

This notice is issued under section 512 of the Federal Food, Drug, and Cosmetic Act (21 U.S.C. 360b), and under authority delegated to the Commissioner of Food and Drugs (21 CFR 5.10).

Dated: February 13, 2002.

Bernard A. Schwetz,

Acting Principal Deputy Commissioner.

[FR Doc. 02–4082 Filed 2–15–02; 8:45 am]

BILLING CODE 4160–01–S

DEPARTMENT OF HEALTH AND HUMAN SERVICES

Food and Drug Administration

[Docket No. 01P–0383]

Determination That Azathioprine 25-Milligram Tablet Was Not Withdrawn From Sale for Reasons of Safety or Effectiveness

AGENCY: Food and Drug Administration, HHS.

ACTION: Notice.

SUMMARY: The Food and Drug Administration (FDA) is announcing its determination that azathioprine 25-milligram (mg) tablet (Imuran) was not withdrawn from sale for reasons of safety or effectiveness. This determination will allow FDA to approve abbreviated new drug applications (ANDAs) for azathioprine 25-mg tablets.

FOR FURTHER INFORMATION CONTACT: Carol E. Drew, Center for Drug Evaluation and Research (HFD–7), Food and Drug Administration, 5600 Fishers

Lane, Rockville, MD 20857, 301–594–2041.

SUPPLEMENTARY INFORMATION: In 1984, Congress enacted the Drug Price Competition and Patent Term Restoration Act of 1984 (Public Law 98–417) (the 1984 amendments), which authorized the approval of duplicate versions of drug products approved under an ANDA procedure. ANDA sponsors must, with certain exceptions, show that the drug for which they are seeking approval contains the same active ingredient in the same strength and dosage form as the ''listed drug,'' which is a version of the drug that was previously approved under a new drug application (NDA). Sponsors of ANDAs do not have to repeat the extensive clinical testing otherwise necessary to gain approval of an NDA. The only clinical data required in an ANDA are data to show that the drug that is the subject of the ANDA is bioequivalent to the listed drug.

The 1984 amendments include what is now section 505(j)(7) of the Federal Food, Drug, and Cosmetic Act (21 U.S.C. 355(j)(7)), which requires FDA to publish a list of all approved drugs. FDA publishes this list as part of the ''Approved Drug Products With Therapeutic Equivalence Evaluations,'' which is generally known as the ''Orange Book.'' Under FDA regulations, drugs are withdrawn from the list if the agency withdraws or suspends approval of the drug's NDA or ANDA for reasons of safety or effectiveness, or if FDA determines that the listed drug was withdrawn from sale for reasons of safety or effectiveness (21 CFR 314.162). Regulations also provide that the agency must make a determination as to whether a listed drug was withdrawn from sale for reasons of safety or effectiveness before an ANDA that refers to that listed drug may be approved (§ 314.161(a)(1) (21 CFR 314.161(a)(1))). FDA may not approve an ANDA that does not refer to a listed drug.

On August 31, 2001, AAI International submitted a citizen petition (Docket No. 01P–0383/CP1) under 21 CFR 10.30 to FDA requesting that the agency determine whether azathioprine 25-mg tablet was withdrawn from sale for reasons of safety or effectiveness. Azathioprine 25-mg tablet is the subject of NDA 016–324. FDA approved NDA 016–324, currently held by Prometheus Laboratories, Inc. (Prometheus), on March 21, 1980. FDA has determined that azathioprine 25-mg tablet was withdrawn from sale.

FDA has reviewed its records and, under § 314.161, has determined that azathioprine 25-mg tablet was not withdrawn from sale for reasons of safety or effectiveness. Accordingly, the agency will continue to list azathioprine 25-mg tablet in the ''Discontinued Drug Product List'' section of the Orange Book. The ''Discontinued Drug Product List'' delineates, among other items, drug products that have been discontinued from marketing for reasons other than safety or effectiveness. ANDAs that refer to azathioprine 25-mg tablet may be approved by the agency.

Dated: February 11, 2002.

Margaret M. Dotzel,

Associate Commissioner for Policy.

[FR Doc. 02–4030 Filed 2–19–02; 8:45 am]

BILLING CODE 4160–01–S

DEPARTMENT OF HEALTH AND HUMAN SERVICES

Food and Drug Administration

[Docket No. 02N–0035]

Mylan Pharmaceuticals et al.; Withdrawal of Approval of 34 Abbreviated New Drug Applications

AGENCY: Food and Drug Administration, HHS.

ACTION: Notice.

SUMMARY: The Food and Drug Administration (FDA) is withdrawing approval of 34 abbreviated new drug applications (ANDAs). The holders of the applications notified the agency in writing that the drug products were no longer marketed and requested that the approval of the applications be withdrawn.

DATES: Effective March 22, 2002.

FOR FURTHER INFORMATION CONTACT: Florine P. Purdie, Center for Drug Evaluation and Research (HFD–7), Food and Drug Administration, 5600 Fishers Lane, Rockville, MD 20857, 301–594–2041.

SUPPLEMENTARY INFORMATION: The holders of the applications listed in the table in this document have informed FDA that these drug products are no longer marketed and have requested that FDA withdraw approval of the applications. The applicants have also, by their request, waived their opportunity for a hearing.

ANDA No.	Drug	Applicant
61–530	Penicillin V Potassium Tablets USP, 250 milligrams (mg) and 500 mg.	Mylan Pharmaceuticals, Inc., 781 Chestnut Ridge Rd., P.O. Box 4310 Morgantown, WV 26504–4310.
61–829	Ampicillin for Oral Suspension USP, 125 mg/5 milliliters (mL) and 250mg/5 mL.	Do.
62–067	Amoxicillin Capsules USP, 250 mg and 500 mg	Do.
62–104	Neomycyin Sulfate with Hydrocortisone Ointment USP, 0.35% and 1%.	Clay-Park Laboratories, Inc., 1700 Bathgate Ave., Bronx, NY 10457.
62–280	Nystatin and Triamcinolone Acetonide Ointment USP	Do.
62–372	Mezlin (sterile mezlocillin sodium)	Bayer Corp. Pharmaceutical Division, 400 Morgan Lane, West Haven, CT 06516.
62–697	Mezlin (sterile mezlocillin sodium)	Do.
71–099	Bromatapp ER (brompheniramine maleate/phenylpropanolamine hydrochloride (HCl)) Extended-Release Tablets, 12 mg/75 mg.	Copley Pharmaceuticals, Inc., 25 John Rd. Canton, MA 02021.
71–551	Flurazepam HCl Capsules USP, 30 mg	Purepac Pharmaceutical Co., 200 Elmora Ave., Elizabeth, NJ 07207.
71–927	Flurazepam HCl Capsules USP, 15 mg	Do.
72–027	Fentanyl Citrate and Droperidol Injection	AstraZeneca LP, 1800 Concord Pike, P.O. Box 8355, Wilmington, DE 19803–8355.
72–070	Nalbuphine HCl Injection USP, 10 mg/mL	Do.
72–073	Nalbuphine HCl Injection USP, 20 mg/mL	Do.
72–921	Prazosin HCl Capsules USP, 2 mg	Purepac Pharmaceutical Co.
72–991	Prazosin HCl Capsules USP, 1 mg	Do.
72–992	Prazosin HCl Capsules USP, 5 mg	Do.
73–690	Calcitonin-Salmon Injection, 200 international units/mL	AstraZeneca LP.

ANDA No.	Drug	Applicant
74–579	Betamethasone Dipropionate Cream USP, 0.05% (base)	Clay-Park Laboratories, Inc.
75–263	Midazolam HCl Injection, 5 mg (base)/mL	AstraZeneca LP.
75–348	Ketorolac Tromethamine Injection USP, 15 mg/mL and 30 mg/mL.	Apothecon, Inc., P.O. Box 4500, Princeton, NJ 08543–4500.
75–355	Labetalol HCl Injection USP, 5 mg/mL	Do.
75–620	Midazolam HCl Injection, 1 mg (base)/mL and 5 mg (base)/mL.	Do.
75–641	Midazolam HCl Injection, 5 mg (base)/mL	Do.
75–642	Bisoprolol Fumarate and Hydrochlorothiazide Tablets	Do.
75–707	Famotidine Injection, 10 mg/mL	Do.
75–708	Famotidine Injection, 10 mg/mL (preservative free)	Do.
83–115	Niacin Tablets USP, 500 mg	Impax Laboratories, Inc., 30831 Huntwood Ave., Hayward, CA 94544.
84–968	Nitrofurazone Ointment USP, 0.2%	Clay-Park Laboratories, Inc.
85–130	Nitrofurazone Topical Solution USP, 0.2%	Do.
86–424	Triple Sulfa Vaginal Cream	Altana Inc., 60 Baylis Rd., Melville, NY 11747.
86–810	Fluocinolone Acetonide Cream USP, 0.01%	Clay-Park Laboratories, Inc.
86–811	Fluocinolone Acetonide Cream USP, 0.025%	Do.
89–784	Meperidine HCl Injection USP, 50 mg/mL	AstraZeneca LP.
89–788	Meperidine HCl Injection USP, 1,000 mg/mL	Do.

Therefore, under section 505(e) of the Federal Food, Drug, and Cosmetic Act (21 U.S.C. 355(e)) and under authority delegated to the Director, Center for Drug Evaluation and Research (21 CFR 5.82), approval of the applications listed in the table in this document, and all amendments and supplements thereto, is hereby withdrawn, effective March 22, 2002.

Dated: February 12, 2002.

Steven K. Galson,

Deputy Director, Center for Drug Evaluation and Research.

[FR Doc. 02–4091 Filed 2–19–02; 8:45 am]

BILLING CODE 4160–01–S

DEPARTMENT OF HEALTH AND HUMAN SERVICES

Food and Drug Administration

[Docket No. 01D–0064]

Draft Special Control Guidance Document on Encapsulated Amalgam, Amalgam Alloy, and Dental Mercury Labeling; Availability

AGENCY: Food and Drug Administration, HHS.

ACTION: Notice.

SUMMARY: The Food and Drug Administration (FDA) is announcing the availability of the draft guidance entitled ''Special Control Guidance Document on Encapsulated Amalgam, Amalgam Alloy, and Dental Mercury Labeling.'' This draft guidance is neither final nor is it in effect at this time. Elsewhere in this issue of the **Federal Register**, the agency is proposing to classify encapsulated amalgam into class II, to amend the classification regulation for amalgam alloy to provide for special controls, and to reclassify dental mercury into class II. The draft guidance document is intended to serve as a special control for these devices.

DATES: Submit written or electronic comments on the draft guidance by May 21, 2002. General comments on agency guidance documents are welcome at any time.

ADDRESSES: Submit written requests for single copies on a 3.5″ diskette of the draft guidance entitled ''Special Control Guidance Document on Encapsulated Amalgam, Amalgam Alloy, and Dental Mercury Labeling'' to the Division of Small Manufacturers Assistance (HFZ–220), Center for Devices and Radiological Health (CDRH), Food and Drug Administration, 1350 Piccard Dr., Rockville, MD 20850. Send two self-addressed adhesive labels to assist that office in processing your request, or fax your request to 301–443–8818. Submit written comments on the draft guidance to the Dockets Management Branch (HFA–305), Food and Drug Administration, 5630 Fishers Lane, rm. 1061, Rockville, MD 20852. Submit electronic comments to http://www.fda.gov/dockets/ecomments. Comments should be identified with the docket number found in brackets in the heading of this document. See the **SUPPLEMENTARY INFORMATION** section for information on electronic access to the draft guidance.

FOR FURTHER INFORMATION CONTACT: Susan Runner, Center for Devices and Radiological Health (HFZ–410), Food and Drug Administration, 9200 Corporate Blvd., Rockville, MD 20850, 301–827–5283.

SUPPLEMENTARY INFORMATION:

I. Background

Elsewhere in this issue of the **Federal Register**, the agency is proposing to classify encapsulated amalgam into class II, to amend the classification regulation for amalgam alloy to provide for special controls, and to reclassify dental mercury into class II. The draft guidance document is intended to serve as a special control for these devices. The guidance document contains recommendations concerning the content and format of labeling for these devices.

II. Significance of Guidance

This draft guidance is being issued consistent with FDA's good guidance practices regulation (21 CFR 10.115). This draft guidance document represents the agency's current thinking on encapsulated amalgam, amalgam alloy, and dental mercury labeling. It does not create or confer any rights for or on any person and does not operate to bind FDA or the public. An alternative approach may be used if such approach satisfies the applicable statutes and regulations. This draft guidance document is issued as a level 1 guidance consistent with the GGP regulations.

III. Electronic Access

In order to receive the draft guidance entitled ''Special Control Guidance Document on Encapsulated Amalgam, Amalgam Alloy, and Dental Mercury Labeling '' via your fax machine, call the CDRH Facts-On-Demand system at 800–899–0381 or 301–827–0111 from a touch-tone telephone. At the first voice prompt press 1 to enter the system. At the second voice prompt press 1 to order a document. Enter the document

number (1192) followed by the pound sign (#). Follow the remaining voice prompts to complete your request.

Persons interested in obtaining a copy of the draft guidance may also do so using the Internet. CDRH maintains an entry on the Internet for easy access to information including text, graphics, and files that may be downloaded to a personal computer with Internet access. Updated on a regular basis, the CDRH home page includes ''Special Control Guidance Document on Encapsulated Amalgam, Amalgam Alloy, and Dental Mercury Labeling,'' device safety alerts, **Federal Register** reprints, information on premarket submissions (including lists of approved applications and manufacturers' addresses), small manufacturers' assistance, information on video conferencing and electronic submissions, Mammography Matters, and other device-oriented information. The CDRH home page may be accessed at http://www.fda.gov/cdrh.

IV. Comments

Interested persons may submit to the Dockets Management Branch (address above) written or electronic comments regarding this draft guidance by May 21, 2002. Two copies of any comments are to be submitted, except that individuals may submit one copy. Comments are to be identified with the docket number found in brackets in the heading of this document. The draft guidance and received comments are available for public examination in the Dockets Management Branch between 9 a.m. and 4 p.m., Monday through Friday.

Dated: February 7, 2002.

Margaret M. Dotzel,

Associate Commissioner for Policy.

[FR Doc. 02–4029 Filed 2–19–02; 8:45 am]

BILLING CODE 4160–01–S

DEPARTMENT OF HEALTH AND HUMAN SERVICES

Food and Drug Administration

[Docket No. 02D–0003]

Draft Guidance for Industry on Exercise-Induced Bronchospasm (EIB)—Development of Drugs to Prevent EIB; Availability

AGENCY: Food and Drug Administration, HHS.

ACTION: Notice.

SUMMARY: The Food and Drug Administration (FDA) is announcing the availability of a draft guidance for industry entitled ''Exercise-Induced Bronchospasm (EIB)—Development of Drugs to Prevent EIB.'' The draft guidance is intended to assist sponsors in developing clinical trials for drugs that prevent EIB. The draft guidance addresses the types of trials that should be performed. It also discusses such issues as exercise testing, efficacy end points, and statistical analyses.

DATES: Submit written or electronic comments on the draft guidance by April 22, 2002. General comments on agency guidance documents are welcome at any time.

ADDRESSES: Submit written requests for single copies of the guidance to the Division of Drug Information (HFD–240), Center for Drug Evaluation and Research, Food and Drug Administration, 5600 Fishers Lane, Rockville, MD 20857. Send one self-addressed adhesive label to assist that office in processing your requests. Submit written comments on the draft guidance to the Dockets Management Branch (HFA–305), Food and Drug Administration, 5630 Fishers Lane, rm. 1061, Rockville, MD 20852. Submit electronic comments to *http://www.fda.gov/dockets/ecomments*. See the **SUPPLEMENTARY INFORMATION** section for electronic access to the draft guidance document.

FOR FURTHER INFORMATION CONTACT: Sandra L. Barnes, Center for Drug Evaluation and Research (HFD–570), Food and Drug Administration, 5600 Fishers Lane, Rockville, MD 20857, 301–827–1050.

SUPPLEMENTARY INFORMATION:

I. Background

FDA is announcing the availability of a draft guidance for industry entitled ''Exercise-Induced Bronchospasm (EIB)—Development of Drugs to Prevent EIB.'' This draft guidance is intended to assist sponsors in designing clinical development programs to achieve an indication for the ''prevention'' of EIB. Drugs that are given chronically to control asthma may also lessen the propensity to develop EIB, as a general consequence of decreasing bronchial hyperreactivity. An important distinction is made, however, between such chronically administered drugs and shorter acting drugs that are given acutely to prevent or treat EIB. This guidance document is intended to provide trial design suggestions to help guide sponsors who are interested in developing drugs that are given acutely to prevent EIB.

This draft guidance is being issued consistent with FDA's good guidance practices regulation (21 CFR 10.115). The draft guidance, when finalized, will represent the agency's current thinking on EIB and the development of drugs to prevent EIB. It does not create or confer any rights for or on any person and does not operate to bind FDA or the public. An alternative approach may be used if such approach satisfies the requirements of the applicable statutes and regulations.

II. Comments

Interested persons may submit to the Dockets Management Branch (address above) written or electronic comments on the draft guidance. Two copies of any comments are to be submitted, except that individuals may submit one copy. Comments are to be identified with the docket number found in brackets in the heading of this document. The draft guidance and received comments are available for public examination in the Dockets Management Branch between 9 a.m. and 4 p.m., Monday through Friday.

III. Electronic Access

Persons with access to the Internet may obtain the document at either *http://www.fda.gov/cder/guidance/index.htm* or *http://www.fda.gov/ohrms/dockets/default.htm*.

Dated: January 30, 2002.

Margaret M. Dotzel,

Associate Commissioner for Policy.

[FR Doc. 02–4090 Filed 2–19–02; 8:45 am]

BILLING CODE 4160–01–S

DEPARTMENT OF HEALTH AND HUMAN SERVICES

Substance Abuse and Mental Health Services Administration

Fiscal Year (FY) 2002 Funding Opportunities

AGENCY: Substance Abuse and Mental Health Services Administration, HHS.

ACTION: Notice of Funding Availability.

SUMMARY: The Substance Abuse and Mental Health Services Administration (SAMHSA) Center for Mental Health Services (CMHS) announces the availability of FY 2002 funds for grants for the following activity. This notice is not a complete description of the activity; potential applicants must obtain a copy of the Guidance for Applicants (GFA), including Part I, Partnerships for Youth Transition, and Part II, General Policies and Procedures Applicable to all SAMHSA Applications for Discretionary Grants and Cooperative Agreements, before preparing and submitting an application.

Activity	Partnerships for Youth Transition

Application Deadline	April 11, 2002
Est. Funds FY 2001	$2 million
Est. No. of Awards	4–5
Project Period	4 years

The actual amount available for the award may vary, depending on unanticipated program requirements and the number and quality of applications received. FY 2002 funds for the activity discussed in this announcement were appropriated by Congress under Public Law No. 106–310. SAMHSA's policies and procedures for peer review and Advisory Council review of grant and cooperative agreement application were published in the **Federal Register** (Vol. 58, No. 126) on July 2, 1993.

General Instructions: Applicants must use application form PHS 5161–1 (Rev. 7/00). The application kit contains the two-part application materials (complete programmatic guidance and instructions for preparing and submitting applications), the PHS 5161–1 which includes Standard Form 424 (Face Page), and other documentation and forms. Application kits may be obtained from: National Mental Health Services Knowledge Exchange Network (KEN), PO Box 42490, Washington, DC 20015, Telephone: 1–800–789–2647.

The PHS 5161–1 application form and the full text of the activity are also available electronically via SAMHSA's World Wide Web Home Page: *http://www.samhsa.gov*

When requesting an application kit, the applicant must specify the particular activity for which detailed information is desired. All information necessary to apply, including where to submit applications and application deadline instructions, are included in the application kit.

Purpose: Substance Abuse and Mental Health Services Administration (SAMHSA) Center for Mental Health Services (CMHS) announces the availability of FY 2002 funds for cooperative agreements to develop, implement, stabilize, and document models of comprehensive programs to help support youth with serious emotional disturbances or serious mental illnesses as they enter the period of emerging adulthood. By the end of the award period, these models should be well-positioned to be rigorously evaluated regarding their effectiveness.

Eligibility: States and political sub-divisions of States (e.g., State agencies or departments; County, City, or State regional agencies; Indian tribes or tribal organizations as defined in section 4(b) and section 4(c) of the Indian Self-determination and Education Assistance Act) can apply. States are defined in section 2 of the PHS Act as including, in addition to the several States, only the District of Columbia, Guam, Commonwealth of Puerto Rico, Northern Mariana Islands, Virgin Islands, American Samoa, and Trust Territory of the Pacific Islands (now Palau, Micronesia, and the Marshall Islands). Interested parties who do not meet these criteria, including faith-based organizations, are encouraged to partner with an agency or organization that is eligible to apply as the lead agency.

Availability of Funds: Approximately $2 million will be available for 4–5 awards. No more than $500,000 in total costs (direct and indirect) will be awarded per cooperative agreement per year. Actual funding levels will depend on the availability of funds. SAMHSA intends to partner with other federal agencies and private foundations in the administration and funding of this program. The possibility exists, therefore, that money may become available to fund more sites than are specified here.

Period of Support: Support should be requested for 4 years. Annual continuation awards will depend on the availability of funds and progress achieved. Only those programs that have completed all required products to the satisfaction of CMHS program staff at the end of year 2 will be renewed for years 3 and 4.

Criteria for Review and Funding

General Review Criteria: Competing applications requesting funding under this activity will be reviewed for technical merit in accordance with established PHS/SAMHSA peer review procedures. Review criteria that will be used by the peer review groups are specified in the application guidance material.

Award Criteria for Scored Applications: Applications will be considered for funding on the basis of their overall technical merit as determined through the peer review group and the appropriate National Advisory Council review process. Availability of funds and geographical distribution of sites will also be award criteria. No more than one cooperative agreement will be awarded per State.

Catalog of Federal Domestic Assistance Number: 93.230.

Program Contact: For questions concerning program issues contact: Diane L. Sondheimer, Center for Mental Health Services, Substance Abuse and Mental Health Services Administration, 5600 Fishers Lane, Room 11C–16, Rockville, MD 20857, Telephone: 301–443–1333, Email: dsondhei@*samhsa.gov*.

For questions regarding grants management issues, contact: Stephen Hudak, Division of Grants Management, Substance Abuse and Mental Health Services Administration, 5515 Security Lane, Rm 630, Rockville, MD 20852, (301) 443–9666, E-mail: *shudak@samhsa.gov*.

Public Health System Reporting Requirements: The Public Health System Impact Statement (PHSIS) is intended to keep State and local health officials apprised of proposed health services grant and cooperative agreement applications submitted by community-based nongovernmental organizations within their jurisdictions.

Community-based nongovernmental service providers who are not transmitting their applications through the State must submit a PHSIS to the head(s) of the appropriate State and local health agencies in the area(s) to be affected not later than the pertinent receipt date for applications. This PHSIS consists of the following information:

a. A copy of the face page of the application (Standard form 424).

b. A summary of the project (PHSIS), not to exceed one page, which provides:

(1) A description of the population to be served.

(2) A summary of the services to be provided.

(3) A description of the coordination planned with the appropriate State or local health agencies.

State and local governments and Indian Tribal Authority applicants are not subject to the Public Health System Reporting Requirements. Application guidance materials will specify if a particular FY 2002 activity is subject to the Public Health System Reporting Requirements.

PHS Non-use of Tobacco Policy Statement: The PHS strongly encourages all grant and contract recipients to provide a smoke-free workplace and promote the non-use of all tobacco products. In addition, Public Law 103–227, the Pro-Children Act of 1994, prohibits smoking in certain facilities (or in some cases, any portion of a facility) in which regular or routine education, library, day care, health care, or early childhood development services are provided to children. This is consistent with the PHS mission to protect and advance the physical and mental health of the American people.

Executive Order 12372: Applications submitted in response to the FY 2002 activity listed above are subject to the intergovernmental review requirements of Executive Order 12372, as implemented through DHHS regulations at 45 CFR part 100. E.O. 12372 sets up

a system for State and local government review of applications for Federal financial assistance. Applicants (other than Federally recognized Indian tribal governments) should contact the State's Single Point of Contact (SPOC) as early as possible to alert them to the prospective application(s) and to receive any necessary instructions on the State's review process. For proposed projects serving more than one State, the applicant is advised to contact the SPOC of each affected State. A current listing of SPOCs is included in the application guidance materials. The SPOC should send any State review process recommendations directly to: Division of Extramural Activities, Policy, and Review, Substance Abuse and Mental Health Services Administration, Parklawn Building, Room 17–89, 5600 Fishers Lane, Rockville, Maryland 20857.

The due date for State review process recommendations is no later than 60 days after the specified deadline date for the receipt of applications. SAMHSA does not guarantee to accommodate or explain SPOC comments that are received after the 60-day cut-off.

Dated: February 13, 2002.

Richard Kopanda,

Executive Officer, Substance Abuse and Mental Health, Services Administration.

[FR Doc. 02–4031 Filed 2–19–02; 8:45 am]

BILLING CODE 4162–20–P

DEPARTMENT OF HOUSING AND URBAN DEVELOPMENT

[Docket No. FR–4739–N–03]

Notice of Proposed Information Collection: Comment Request

Loan Servicing of all Three Coinsurance Programs; Section 223(f), Section 221(d), and Section 232

AGENCY: Office of the Assistant Secretary for Housing-Federal Housing Commissioner, HUD.

ACTION: Notice.

SUMMARY: The proposed information collection requirement described below will be submitted to the Office of Management and Budget (OMB) for review, as required by the Paperwork Reduction Act. The Department is soliciting public comments on the subject proposal.

DATES: Comments Due Date: April 22, 2001.

ADDRESSES: Interested persons are invited to submit comments regarding this proposal. Comments should refer to the proposal by name and/or OMB Control Number and should be sent to: Wayne Eddins, Reports Management Officer, Department of Housing and Urban Development, 451 7th Street, SW., L'Enfant Plaza Building, Room 8001, Washington, DC 20410.

FOR FURTHER INFORMATION CONTACT: Kimberly R. Sanford, Policy and Participation Standards Division, Department of Housing and Urban Development, 451 7th Street SW., Washington, DC 20410, telephone (202) 708–3730 (this is not a toll free number) for copies of the proposed forms and other available information.

SUPPLEMENTARY INFORMATION: The Department is submitting the proposed information collection to OMB for review, as required by the Paperwork Reduction Act of 1995 (44 U.S.C. Chapter 35, as amended).

This Notice is soliciting comments from members of the public and affected agencies concerning the proposed collection of information to: (1) Evaluate whether the proposed collection is necessary for the proper performance of the functions of the agency, including whether the information will have practical utility; (2) Evaluate the accuracy of the agency's estimate of the burden of the proposed collection of information; (3) Enhance the quality, utility, and clarity of the information to be collected; and (4) Minimize the burden of the collection of information on those who are to respond; including the use of appropriate automated collection techniques or other forms of information technology, e.g., permitting electronic submission of responses.

This Notice also lists the following information:

Title of Proposal: Loan Servicing of all Three Coinsurance Programs; section 223(f), section 221(d), and section 232.

OMB Control Number, if applicable: 2402–0314.

Description of the need for the information and proposed use: Information is needed to review and evaluate the financial, physical, and managerial adequacy of multifamily housing, retirement service centers, and nursing homes with multi-million dollar coinsured loans to minimize risks and to protect these assets and the Government's interest.

Agency form numbers, if applicable: None.

Estimation of the total numbers of hours needed to prepare the information collection including number of respondents, frequency of response, and hours of response: The estimated number of respondents is 16, the frequency of response is annually, estimated time to complete response is 67.5 hours, and the total annual burden requested is 1,080 hours.

Status of the proposed information collection: Reinstatement, with change, of a previously approved collection for which approval has expired.

Authority: The Paperwork Reduction Act of 1995, 44 U.S.C. Chapter 35, as amended.

Dated: February 9, 2002.

John C. Weicher,

Assistant Secretary for Housing–, Federal Housing Commissioner.

[FR Doc. 02–4016 Filed 2–19–02; 8:45 am]

BILLING CODE 4210–27–M

DEPARTMENT OF THE INTERIOR

Fish and Wildlife Service

Notice of Meeting of the Klamath Fisheries Management Council

AGENCY: Fish and Wildlife Service, Interior.

ACTION: Notice of meeting.

SUMMARY: Pursuant to section 10(a)(2) of the Federal Advisory Committee Act (5 U.S.C. App. I), this notice announces a meeting of the Klamath Fishery Management Council, established under the authority of the Klamath River Basin Fishery Resources Restoration Act (16 U.S.C. 460ss *et seq.*). The Klamath Fishery Management Council makes recommendations to agencies that regulate harvest of anadromous fish in the Klamath River Basin. The objectives of this meeting are to hear technical reports, to discuss and develop Klamath fall chinook salmon harvest management options for the 2002 season, and to make recommendations to the Pacific Fishery Management Council and other agencies. The meeting is open to the public.

DATES: The Klamath Fishery Management Council will meet from 3:00 p.m. to 5:00 p.m. on Sunday, March 10, 2002.

PLACE: The meeting will be held at the Red Lion Hotel, 1401 Arden Way, Sacramento, California.

FOR FURTHER INFORMATION CONTACT: Phil Detrich, Project Leader, 1829 South Oregon Street, Yreka, California 96097, telephone (530) 842–5763.

SUPPLEMENTARY INFORMATION: At the March 10, 2002 meeting, the Klamath Fishery Management Council may schedule short follow-up meetings to be held between March,11, 2002, and March 15, 2002, at the Red Lion Hotel, 1401 Arden Way, Sacramento, California, where the Pacific Fishery Management Council will be meeting.

For background information on the Klamath Council, please refer to the notice of their initial meeting that appeared in the **Federal Register** on July 8, 1987 (52 FR 25639).

Dated: February 12, 2002.

John Engbring,

Acting Manager, California/Nevada Operations Office, Sacramento, California.

[FR Doc. 02–4007 Filed 2–19–02; 8:45 am]

BILLING CODE 4310–55–P

DEPARTMENT OF THE INTERIOR

Bureau of Land Management

[NV–030–00–1020–24]

Mojave Southern Great Basin Resource Advisory Council; Notice of Meeting Location and Time

AGENCY: Bureau of Land Management, Interior.

ACTION: Notice of meeting location and time for the Mojave Southern Great Basin Resource Advisory Council (Nevada).

SUMMARY: In accordance with the Federal Land Policy and Management Act and the Federal Advisory Committee Act of 1972 (FACA), the U.S. Department of the Interior, Bureau of Land Management (BLM) Mojave Southern Great Basin Resource Advisory Council (RAC), Nevada, will be held as indicated below. Topics for discussion will include manager's reports of field office activities; an update on the Southern Nevada Public Land Management Act of 1998; and other topics the council may raise.

All meetings are open to the public. The public may present written and/or oral comments to the council at 2:30 p.m. on Thursday, March 7, 2002. Individuals who need special assistance such as sign language interpretation or other reasonable accommodations should contact Phillip Guerrero at (702) 498–6088 by March 1, 2002.

DATE AND TIME: The RAC will meet on Thursday, March 7 and Friday March 8, 2002 at the Bureau of Land Management, Las Vegas Field Office, 4701 North Torrey Pines Drive, Las Vegas NV 89130–2301 from 8:30 a.m. to 4 p.m. daily

FOR FURTHER INFORMATION CONTACT: Phillip L. Guerrero, Public Affairs Officer, BLM Las Vegas Field Office, 4701 North Torrey Pines Drive, Las Vegas NV 89130–2301, or by phone at (702) 498–6088.

Dated: January 21, 2002.

Phillip L. Guerrero,

Public Affairs Officer, Las Vegas Field Office.

[FR Doc. 02–4143 Filed 2–19–02; 8:45 am]

BILLING CODE 4310–HC–P

DEPARTMENT OF THE INTERIOR

Bureau of Land Management

(CO–600–00–1040–PG–241A)

Southwest Colorado and Northwest Colorado Resource Advisory Council Meetings

AGENCY: Bureau of Land Management, Interior.

ACTION: Notice of Meetings.

SUMMARY: Notice is hereby given that the next meeting of the Southwest Colorado Resource Advisory Council (RAC) will be held March 6, 2002 at the Ouray Community Center located at 320 6th Avenue in Ouray, Colorado. Notice is also given that the next meeting of the Northwest Colorado RAC will be held on March 14, 2002 at the Hotel Colorado, located at 516 Pine in Glenwood Springs, Colorado.

DATES: Southwest RAC meeting: March 6, 2002; Northwest RAC meeting: March 14, 2002.

FOR FURTHER INFORMATION CONTACT: Larry J. Porter, Bureau of Land Management, 2815 H Road, Grand Junction, Colorado 81506; Telephone (970) 244–3012.

SUPPLEMENTARY INFORMATION: The Southwest Colorado RAC will meet on Wednesday, March 6, 2002, in the Ouray Community Center located at 320 6th Avenue in Ouray, Colorado. The meeting will begin at 9:00 a.m., and will adjourn upon completion of the agenda, approximately 4:00 p.m. The purpose of the meeting is to elect new RAC officers and to consider several resource management topics including Gunnison Gorge National Conservation Area Resource Management Plan and Environmental Impact Statement update, weed management, wildlife conflicts, Uncompahgre Plateau Project update and BLM staff briefings.

The Northwest Colorado RAC will meet on Thursday, March 14, 2002, at the Hotel Colorado located at 516 Pine in Glenwood Springs, Colorardo. The meeting will begin at 9:00 a.m., and will adjourn upon completion of the agenda, approximately 4:00 p.m. The purpose of the meeting is to elect new RAC officers and to consider several resource management updates including RAC subcommittee reports, travel management, oil—gas—coal programs, cultural resources program, fire management, and BLM staff briefings.

These meetings are open to the public. Interested members of the public may present written or oral comments to either of the RACs at 9:20 a.m. or 3:40 p.m. on the respective meeting dates. Per-person time limits for oral statements may be set to allow all interested individuals an opportunity to speak. Subject to the time available, individuals may also be allowed to provide input to the councils during discussion of specific agenda topics.

Summary minutes of RAC meetings are maintained in the BLM Western Slope Center Office located at 2815 H Road, Grand Junction, CO 81506; Telephone (970) 244–3000. Minutes are available for public inspection and reproduction during regular business hours within thirty (30) days following the meeting.

Dated: January 24, 2002

Larry J. Porter

Resource Advisor, Western Slope Center.

[FR Doc. 02–4144 Filed 2–19–02; 8:45 am]

BILLING CODE 4310–JB–P

DEPARTMENT OF THE INTERIOR

Bureau of Reclamation

Pick-Sloan Missouri Basin Program (P–SMBP), Eastern and Western Division Project Use Power Rate Adjustment

AGENCY: Bureau of Reclamation, Interior.

ACTION: Approval of new rate for Pick-Sloan Missouri Basin Program (P–SMBP), Eastern and Western Division Project Use Power.

SUMMARY: The Bureau of Reclamation (Reclamation) determined, after public input, that the proposed P–SMBP project use power rate of 10.76 mils/kWh is approved and will become effective 30 days after this notice is published.

DATES: The P–SMBP project use power rate of 10.76 mils/kWh will become effective March 22, 2002.

ADDRESSES: All booklets, studies, comments/letters that were utilized to develop the rate for project use power are available for inspection and copying at the Great Plains Regional Office, located at 316 North 26th Street, Billings, Montana 59101.

FOR FURTHER INFORMATION CONTACT: Kent Heidt at (406) 247–7761.

SUPPLEMENTARY INFORMATION: Power rates for the P–SMBP are established pursuant to the Reclamation Act of 1902

(43 U.S.C. 371 *et seq.*), as amended and supplemented by subsequent enactments, particularly Section 9(c) of the Reclamation Project Act of 1939 (43 U.S.C. 485h(c)) and the Flood Control Act of 1944 (58 Stat. 887).

The project use power rate will be reviewed by Reclamation each time Western Area Power Administration (Western) adjusts the P–SMBP Firm power rate. Western will conduct the necessary studies and will use the same Reclamation-established methodology that was used to develop the 10.76 mils/kWh rate to calculate any new rate. The P–SMBP project use rate will be adjusted by Reclamation when Western adjusts the P–SMBP Firm power rate.

Explanation of Public Comment Format

Reclamation published a **Federal Register** notice on December 18, 2000 (65 FR 79122, Dec. 18, 2000) stating our intent to adjust the project use power rate with a 30-day written comment period ending on January 17, 2001. Reclamation published another **Federal Register** notice on January 16, 2001 (66 FR 3611, Jan. 16, 2001), that extended the comment period to February 26, 2001. A total of 18 letters with written comments were received during the comment period.

Project Use Power Rate Adjustment Comments

The following comments were received during the public comment period. Reclamation paraphrased and combined comments when it did not affect the meaning. Reclamation's response follows each comment.

Comment: Reclamation should grant a 60-day extension of time for comments on proposed P–SMBP project use power rate adjustment.

Response: The comment period was extended by **Federal Register** notice dated January 16, 2001 (66 FR 3611, Jan. 16, 2001), to February 26, 2001, a 41-day extension.

Comment: The rate adjustment is the first step in a base rate change for all projects utilizing P–SMBP project use power.

Response: The ''Flood Control Act of 1944'' (Act) provides for a 2.5 mils/kWh project use power rate which was considered at that time to cover the cost of generation, transmission, and distribution while at the same time be within the irrigators ability to pay. The Act does not preclude rate adjustments, within ability to pay. The rate for project use power will be adjusted to reflect actual operating, maintenance, and replacement (OM&R) costs, subject to ability to pay. In all cases the rate will not be less than 2.5 mils/kWh.

Comment: The rate adjustment has the potential to put irrigation units out of business.

Response: As it has been the case with project use power contracts initially executed by this Region, the pumping power contractors will pay according to ability-to-pay. Should a district's ability to pay not increase, irrigators will continue to pay 2.5 mils/kWh. The water contracts will contain a 5-year ability-to-pay review provision consistent with Reclamation-wide policy following the Office of Inspector General Audit ''Repayment of Irrigation Investments by Water Districts: 93–1468,'' issued February 8, 1993.

Comment: The rate adjustment is a major policy change in the manner in which wheeling costs and ability-to-pay are applied to the rate.

Response: The rate adjustment does not result from any change in policy concerning the inclusion of wheeling costs in the project use power rate or the application of ability to pay these costs. The Act contains the rationale and congressional intent for incorporating wheeling costs in the project use power rate as well as applying the ability-to-pay concept to irrigation pumping power costs.

Comment: Third party wheeling costs will be transferred from the irrigators to all preference power customers due to ability to pay. Third party wheeling costs are being reclassified as annual O&M expenses.

Response: The intent of P–SMBP was to provide power to the pump. The 2.5 mils/kWh project use power rate was established under the assumption that energy would be transmitted and distributed to the pump over federally owned lines. If Reclamation had built its own lines all the way to the pumps, OM&R would be included in the basic pumping power rate. Therefore, wheeling costs will be included similarly as if Reclamation had built the lines.

Comment: Including wheeling costs in the project use power rate opens the door wide for further cost reallocation on other irrigation costs.

Response: No. Reclamation law generally requires that districts pay all power and water OM&R costs. However, the Pick-Sloan program is unique due to SD 191's application of ability to pay to power, i.e., irrigation pumping power. Since the mid-1970's, the difference between the 2.5 mil irrigation pumping power rate set in 1944 and full OM&R costs has been incorporated into the preference power rate.

Comment: Reclamation should provide the legal basis for the charge and enunciate a clear policy for treatment of costs related to P–SMBP irrigation projects.

Response: General Reclamation law requires that districts pay all power and water OM&R costs. The P–SMBP has a unique legal provision, the application of ability-to-pay to project use power. A rate adjustment does not affect the treatment of cost related to P–SMBP irrigation projects.

Comment: Reclamation shall provide clear justification for the proposed cost transfer and explain how the original congressional intent with respect to cost/benefit evaluation can be justified as legal.

Response: On P–SMBP projects the Congress intended that there be a substantial subsidy for irrigation development and made special allowance for the payment of power costs to assure success on those projects that required pumping to provide 10 feet of head at the farm turnout. The October 31, 1947, memorandum from the Acting Assistant Commissioner states: ''In the event Reclamation elects to provide service by wheeling arrangements, Reclamation should properly make arrangements for wheeling service and absorb the cost thereof as an operation expense. Such is merely an expense in lieu of the costs of providing service over federally owned facilities.''

Comment: Reclamation's proposed methodology for determining the project use power rate does not properly reflect all costs and accounting for those costs. Spreading the irrigation third party wheeling costs across all P–SMBP Firm power sales artificially reduces the proposed project use power rate to 10.76 mils/kWh. If third party wheeling costs for P–SMBP irrigation projects were properly allocated only to P–SMBP irrigation projects, the project use power rate would be almost 18 mils/kWh. That methodology and resulting rate would establish an accurate project use power rate. Reclamation should adopt the methodology that properly classifies third party wheeling as a component of irrigation sales and not based on total P–SMBP sales.

Response: The proposed rate of 10.76 mils/kWh has all current OM&R costs, including wheeling, from the three Federal agencies spread over all the sales, not just irrigation sales. Third party wheeling cost for project use power, along with other Federal wheeling costs, is considered the same as any other OM&R expense in the P–SMBP power repayment study.

Comment: Using the methodology that spreads third party wheeling costs only over irrigation sales will ensure

proper accounting and not adversely affect the irrigators.

Response: Reclamation will spread the third party wheeling for project use power over the entire rate structure just as if the power were wheeled over Federal lines.

Comment: The methodology of the ability-to-pay studies seems seriously flawed as private irrigation districts in the same area of irrigation units receiving P–SMBP project use power are currently paying as much as 30 times the project use power rate and pay 100 percent of the capital costs of their project, but 20 percent is typical repayment for a P–SMBP irrigation unit.

Response: The methodology for ability to pay is a form of recognized farm budgeting techniques employed by USDA, the Cooperative Extension Service, and other entities. The assertions that other projects can pay their full costs appear to be anecdotal, and no definitive studies have been put forth that make a full comparison of the fixed and variable costs of like farm enterprises in the private and Federal sector. Farm budget studies for Reclamation ability-to-pay analysis first account for all on-farm expenses, including on-farm irrigation expense. It is out of the remaining net farm income that district operating expense, project capital, and project use power are paid. Farms using groundwater or pumping out of surface streams do not have large distribution system capital and operating expenses assigned to them as do Reclamation projects.

Comment: The 1999 Power Repayment Study used as a basis for the proposed rate shows an annual decrease in energy sales due to depletions associated with future irrigation development, but Reclamation has stated most irrigation developments are no longer feasible; therefore, the ultimate development concept should be changed and more realistic energy numbers used throughout the repayment period.

Response: Regardless of the current economic feasibility of future P–SMBP irrigation development, Federal statutes require that the ultimate development concept remain the standard by which the economic, financial, and hydrologic assumptions are incorporated into overall P–SMBP financial analyses. Reports to the Congress on future project feasibility have not resulted in any legislation that would permit changes. Moreover, removing the depletions because of implied infeasibility would also have to be accompanied by removing the irrigation investment associated with those depletions and changing the cost allocations, including suballocation of investment associated with project use power and reservoir storage. All of these components are interrelated to ultimate development and cannot be treated separately.

Comment: Replacement costs in the power repayment study for year 2000 to 2099, appear high ($2,638,052,924) compared to the actual historical expenses for 1950 to 1999 ($159,391,916).

Response: Historical costs were booked at their acquisition cost. Reclamation's construction cost index shows that the powerplant cost index has gone from 26 in 1950 to 231 in 1999, over an 800 percent increase. Comparing today's cost with historical costs on a nominal basis will generally show today's costs to be higher because of inflation alone. Comparison would have to be done in constant dollar values to draw any meaningful conclusions.

Comment: The power repayment study shows an investment of $1.3 billion from 1970 to 1998, and commentor believes the additional investment is mostly due to transmission costs for preference customers as most of the power system to serve irrigation was in place prior to 1970. The commentor recommends that Reclamation not utilize all the investment costs since 1970, as those costs are a benefit to firm power customers. If all the investment costs and associated OM&R costs were not utilized in the study the proposed rate would be different (lower).

Response: The system as a whole is integrated and irrigation would most likely be as affected by outages on the grid as the commercial customers, regardless of whose load caused the outage. Since irrigation pumping would benefit from overall increased reliability, it should share in the cost of those benefits. Seventy-six million of the $1.3 billion is due to the new power generation at Buffalo Bill Dam.

Comment: Peaking sales appear to decrease in the power repayment study in out years due to depletion associated with future irrigation development which we do not believe will take place.

Response: This is associated with the ultimate development concept and cannot change without congressional action.

Comment: The column titled ''Other Revenue'' in the power repayment study includes peaking, maintenance, and other power sales.

Response: Yes.

Comment: If adjustments were made in the study for decreased energy sales due to depletion, transmission costs since 1970, reduced replacement cost estimates, and power sales for peaking, the rate would be reduced.

Response: Yes, but depletion, which reduces energy and peaking power sales, is associated with the ultimate development concept and cannot be changed without congressional action. Additions after 1970 were for system reliability, and replacement dollars are current-day dollars instead of inflated dollars.

Comment: Congressional intent was that the project use power rate remains at 2.5 mils/kWh.

Response: In 1944, 2.5 mils/kWh was sufficient to cover OM&R costs. OM&R costs have significantly increased, and since the Act does not direct that the project use power rate be fixed, but only be ''within'' the ability-to-pay, the rate is being adjusted to reflect current costs.

Comment: A project use power rate adjustment would discourage new irrigation development and jeopardize existing projects.

Response: Existing projects and new irrigation developments currently authorized, will pay subject to their ability to pay. Newly authorized projects will be subject to the new project use power rate subject to specific legislation.

Comment: Instead of a rate adjustment, Reclamation should take a lead role in securing additional P–SMBP power for new and existing irrigation projects as well as individual irrigators.

Response: With respect to construction of any new projects or inclusion of existing non-Federal projects into the P–SMBP, Reclamation must operate according to its congressionally mandated authority.

Comment: Reclamation has chosen not to conduct ability-to-pay tests on P–SMBP irrigation projects in conjunction with its proposed rate adjustment, yet states the application of the ability to pay will reduce the rate to the current level of 2.5 mils/kWh.

Response: Over the past several years, ability-to-pay studies have been conducted on 10 irrigation units and updated on 3 others. Twelve of the 13 studies found no additional ability to pay. One unit had a small increase in ability to pay. Some existing and all renewed repayment and water service contracts will contain requirements for periodic reviews of ability to pay, normally accomplished on a 5-year basis, in accordance with the Commissioner's ''Ability-To-Pay Policy'' dated July 7, 1999. The periodic reviews will be used, along with published agricultural statistics, as indicators of economic conditions; if they indicate the likely potential of additional ability

to pay, it would lead to ability-to-pay studies for project use power contractors.

Comment: Since Reclamation intends to maintain the effective project use power rate at 2.5 mils/kWh, through application of the ability-to-pay test, what is the purpose of Reclamation's proposed rate adjustment?

Response: While present economic conditions create depressed agriculture and the majority of the irrigators will pay 2.5 mils/kWh, the adjusted rate will allow Reclamation to capture additional revenues if and when the economics of agriculture improve. It will also provide current rate structure for use in decisions and legislation related to proposed new projects. Reclamation is required to have accurate numbers for operations, maintenance, and replacement costs.

NEPA

In compliance with the National Environmental Policy Act of 1969 (NEPA), 43 U.S.C. 4321 *et seq.* Council on Environmental Quality Regulations (40 CFR parts 1500–1508); and the Department of Energy's NEPA Implementing Procedures (10 CFR part 1021), Reclamation has determined that this action is categorically excluded from the preparation of an Environmental Assessment or Environmental Impact Statement.

Power Rate Schedules

The existing rate schedule MRB–P10 placed into effect on November 1, 1986, will be replaced by rate schedule MRB–P11. Rate Schedule MRB–P11 is as follows: *Effective:* 30 days after being published in the **Federal Register**. *Location:* In the areas generally described as central and eastern Montana, North and South Dakota, Nebraska, eastern Colorado, Wyoming, Kansas, western Iowa, and western Minnesota.

Applicable

For use in the operation of congressionally authorized irrigation and drainage pumping plants on irrigation projects for power service supplied through metering at specified points of delivery.

Character and Conditions of Service

Alternating current, 60 hertz, three phase, delivered and metered at the point identified in the contract upon demand during the summer irrigation season.

Availability

Available at 60 hertz at the pumping plant upon demand during the summer irrigation season.

Monthly Rate

Demand Charge: None.

Energy Charge: 10.76 mils/kWh for all energy use; subject to ability-to-pay but not less than 2.5 mils/kWh.

Seasonal Minimum Bill: $2.75 per kilowatt of the maximum 30-minute integrated demand established during service months of each year specified in the contract.

Adjustments

For Power Factor: The customer will normally be required to maintain a power factor at a point of delivery of not less than 95 percent lagging or leading.

Approval of Project Use Power Rate by the Commissioner, Bureau of Reclamation

The Commissioner approved the rate of 10.76 mils/kWh by memorandum dated January 15, 2002.

Dated: January 23, 2002.

Gerald W. Kelso,

Assistant Regional Director.

[FR Doc. 02–4025 Filed 2–19–02; 8:45 am]

BILLING CODE 4310–MN–P

DEPARTMENT OF JUSTICE

Drug Enforcement Administration

Importation of Controlled Substances; Notice of Application

Pursuant to section 1008 of the Controlled Substances Import and Export Act (21 U.S.C. 958(i)), the Attorney General shall, prior to issuing a registration under this Section to a bulk manufacturer of a controlled substance in Schedule I or II and prior to issuing a regulation under Section 1002(a) authorizing the importation of such a substance, provide manufacturers holding registrations for the bulk manufacture of the substance an opportunity for a hearing.

Therefore, in accordance with Section 1301.34 of Title 21, Code of Federal Regulations (CFR), notice is hereby given that on March 7, 2001, Cedarburg Pharmaceutical LLC, 870 Badger Circle, Grafton, Wisconsin 53024, made application to the Drug Enforcement Administration to be registered as an importer of the basic classes of controlled substances listed below:

Drug	Schedule
Codeine (9050)	II
Morphine (9300)	II
Thebaine (9333)	II

The firm plans to import the listed controlled substances to repackage and sell as bulk controlled substances, and also use as starting materials to manufacture bulk active pharmaceuticals ingredients.

Any manufacturer holding, or applying for, registration as a bulk manufacturer of these basic classes of controlled substances may file written comments on or objections to the application described above and may, at the same time, file a written request for a hearing on such application in accordance with 21 CFR 1301.43 in such form as prescribed by 21 CFR 1316.47.

Any such comments, objections, or requests for a hearing may be addressed, in quintuplicate, to the Deputy Assistant Administrator, Office of Diversion Control, Drug Enforcement Administration, United States Department of Justice, Washington, DC 20537, Attention: DEA Federal Register Representative (CCR), and must be filed no later than (30 Days from publication).

This procedure is to be conducted simultaneously with and independent of the procedures described in 21 CFR 1301.34(b), (c), (d), (e), and (f). As noted in a previous notice at 40 FR 43745–46 (September 23, 1975), all applicants for registration to import basic classes of any controlled substances in Schedule I or II are and will continue to be required to demonstrate to the Deputy Assistant Administrator, Office of Diversion Control, Drug Enforcement Administration that the requirements for such registration pursuant to 21 U.S.C. 958(a), 21 U.S.C. 823(a), and 21 CFR 1301.34(a), (b), (c), (d), (e), and (f) are satisfied.

Dated: February 6, 2002.

Laura M. Nagel,

Deputy Assistant Administrator, Office of Diversion Control, Drug Enforcement Administration.

[FR Doc. 02–4057 Filed 2–19–02; 8:45 am]

BILLING CODE 4410–09–M

DEPARTMENT OF JUSTICE

Drug Enforcement Administration

Manufacturer of Controlled Substances; Notice of Registration

By Notice dated August 9, 2001, and published in the **Federal Register** on August 10, 2001, (66 FR 42240), Roche Diagnostics Corporation, Attn:

Regulatory Compliance, 9115 Hague Road, Indianapolis, Indiana 46250, made application by renewal to the Drug Enforcement Administration (DEA) to be registered as a bulk manufacturer of the basic classes of controlled substances listed below:

Drug	Schedule
Lysergic acid diethylamide (7315)	I
Tetrahydrocannabinols (7370)	I
Phencyclidine (7471)	II
Benzoylecgonine (9180)	II
Methadone (9250)	II
Morphine (9300)	II

Roche Diagnostics Corporation plans to manufacture small quantities of the above listed controlled substances for incorporation in drug of abuse detection kits.

No comments or objections have been received. DEA has considered the factors in Title 21, United States Code, section 823(a) and determined that the registration of Roche Diagnostics Corporation to manufacture the listed controlled substances is consistent with the public interest at this time. DEA has investigated Roche Diagnostics Corporation to ensure that the company's continued registration is consistent with the public interest. These investigations have included inspection and testing of the company's physical security systems, audits of the company's records, verification of the company's compliance with state and local laws, and a review of the company's background and history. Therefore, pursuant to 21 U.S.C. section 823 and 28 CFR secs. 0.100 and 0.104, the Deputy Assistant Administrator, Office of Diversion Control, hereby orders that the application submitted by the above firm for registration as a bulk manufacturer of the basic classes of controlled substances listed above is granted.

Dated: February 1, 2002.

Laura M. Nagel,

Deputy Assistant Administrator, Office of Diversion Control, Drug Enforcement Administration.

[FR Doc. 02–4056 Filed 2–19–02; 8:45 am]

BILLING CODE 4410–09–M

OVERSEAS PRIVATE INVESTMENT CORPORATION

Submission for OMB Review; Comment Request

AGENCY: Overseas Private Investment Corporation

ACTION: Request for comments.

SUMMARY: Under the provisions of the Paperwork Reduction Act (44 U.S.C. chapter 35), agencies are required to publish a Notice in the **Federal Register** notifying the public that the Agency is preparing an information collection request for OMB review and approval and to request public review and comment on the submission. OPIC published its first Federal Register Notice on this information collection request on December 12, 2002, in 66 FR 239, p. 64312, at which time a 60-calendar day comment period was announced. This comment period ended February 11, 2002. No comments were received in response to this notice.

This information collection submission has now been submitted to OMB for review. Comments are again being solicited on the need for the information, its practical utility, the accuracy of the Agency's burden estimate, and on ways to minimize the reporting burden, including automated collection techniques and uses of other forms of technology. The proposed form under review is summarized below.

DATES: Comments must be received on or before March 22, 2002.

ADDRESSES: Copies of the subject form and the request for review submitted to OMB may be obtained from the Agency Submitting Officer. Comments on the form should be submitted to the OMB Reviewer.

FOR FURTHER INFORMATION CONTACT:

OPIC Agency Submitting Officer

Carol Brock, Records Manager, Overseas Private Investment Corporation, 1100 New York Avenue, NW., Washington, DC 20527; 202/336–8563.

OMB Reviewer

David Rostker, Office of Information and Regulatory Affairs, Office of Management and Budget, New Executive Office Building, Docket Library, Room 10102, 725 17th Street, NW., Washington, DC 20503, 202/395–3897.

Summary of Form Under Review

Type of Request: Form Amendment.

Title: Application for Political Risk Investment Insurance.

Form Number: OPIC–52.

Frequency of Use: Once per investor, per project.

Type of Respondents: Business or other institutions.

Standard Industrial Classification Codes: All.

Description of Affected Public: U.S. companies investing overseas.

Reporting Hours: 6½ hours per project.

Number of Responses: 150 per year.

Federal Cost: $24,300 per year.

Authority for Information Collection: Sections 231 and 234(a) of the Foreign Assistance Act of 1961, as amended.

Abstract (Needs and Uses): The OPIC 52 form is the principal document used by OPIC to determine the investor's and the project's eligibility, assess the environmental impact and developmental effects of the project, measure the economic effects for the United States and the host country economy, and collect information for underwriting analysis.

Dated: February 13, 2002.

Rumu Sarkar,

Assistant General Counsel, Administrative Affairs, Department of Legal Affairs.

[FR Doc. 02–4018 Filed 2–19–02; 8:45 am]

BILLING CODE 3210–01–M

RAILROAD RETIREMENT BOARD

Proposed Data Collection; Comment Request

SUMMARY: In accordance with the requirement of section 3506(c)(2)(A) of the Paperwork Reduction Act of 1995 which provides opportunity for public comment on new or revised data collections, the Railroad Retirement Board will publish periodic summaries of proposed data collections.

Comments are invited on: (a) Whether the proposed information collection is necessary for the proper performance of the functions of the agency, including whether the information has practical utility; (b) the accuracy of the RRB's estimate of the burden of the collection of the information: (c) ways to enhance the quality, utility, and clarity of the information to be collected; and (d) ways to minimize the burden related to the collection of information on respondents, including the use of automated collection techniques or other forms of information technology.

Title and Purpose of information collection: Statement Regarding Contributions and Support: OMB 3220–0099 Under section 2 of the Railroad Retirement Act, dependency on an employee for one-half support at the time of an employee's death can be a condition affecting entitlement to a survivor annuity and can affect the amount of both spouse and survivor annuities. One-half support is also a condition which may negate the public service pension offset in Tier I for a spouse or widow(er). The Railroad Retirement Board (RRB) utilizes Form G–134, Statement Regarding Contributions and Support, to secure

information needed to adequately determine if the applicant meets the one-half support requirement. One form is completed by each respondent. Non-burden impacting editorial and formatting changes are being proposed to Form G–134 for clarification purposes. Also, enhanced program monitoring and evaluation of this form last year showed that the completion time needed to be increased significantly because the annuitant needed time to gather the necessary information from many personal finance records not normally kept on hand.

The estimated annual respondent burden is as follows:

ESTIMATE OF ANNUAL RESPONDENT BURDEN

Form #	Annual responses	Estimated completion time (min)	Burden (hrs)
G–134			
With assistance	75	147	184
Without assistance	25	180	75
Total	100		259

Additional Information or Comments: To request more information or to obtain a copy of the information collection justification, forms, and/or supporting material, please call the RRB Clearance Officer at (312) 751–3363. Comments regarding the information collection should be addressed to Ronald J. Hodapp, Railroad Retirement Board, 844 N. Rush Street, Chicago, Illinois 60611–2092. Written comments should be received within 60 days of this notice.

Chuck Mierzwa,

Clearance Officer.

[FR Doc. 02–4026 Filed 2–19–02; 8:45 am]

BILLING CODE 7905–01–M

SECURITIES AND EXCHANGE COMMISSION

[Release No. IC–25420; File No. 812–12384]

IDS Life Insurance Company, et al., Notice of Application

February 12, 2002.

AGENCY: Securities and Exchange Commission (''Commission'').

ACTION: Notice of Application for an Order Pursuant to section 11(a) of the Investment Company Act of 1940, as amended (the ''Act'') approving the terms of an offer of exchange.

APPLICANTS: IDS Life Insurance Company (''IDS Life''), IDS Life Variable Account 10 (''Account 10'') and IDS Life Accounts F, G, H, IZ, JZ, KZ, LZ, MZ, N, PZ, QZ, RZ, SZ and TZ (the ''Old Accounts,'' collectively with Account 10, the ''Accounts'') (collectively, the ''Applicants'').

SUMMARY OF APPLICATION: Applicants seek an order pursuant to section 11(a) of the Act approving the terms of a proposed offer of exchange of new American Express Retirement Advisor Advantage Variable Annuity contracts issued by IDS Life and made available through Account 10 (''RAVA Advantage'') for certain outstanding annuity contracts issued by IDS Life and made available through the Old Accounts (the ''Old Contracts,'' collectively with RAVA Advantage, the ''Contracts'').

FILING DATE: The Application was filed on December 28, 2000, and amended and restated on November 15, 2001, December 6, 2001, and February 8, 2002.

HEARING OR NOTIFICATION OF HEARING: An order granting the Application will be issued unless the Commission orders a hearing. Interested persons may request a hearing by writing to the Secretary of the Commission's and serving Applicants with a copy of the request, personally or by mail. Hearing requests should be received by the Commission by 5:30 p.m. on March 11, 2002, and should be accompanied by proof of service on Applicants, in the form of an affidavit or, for lawyers, a certificate of service. Hearing requests should state the nature of the writer's interest, the reason for the request, and the issues contested. Persons who wish to be notified of a hearing may request notification by writing to the Secretary of the Commission.

ADDRESSES: Secretary, Securities and Exchange Commission, 450 Fifth Street, NW, Washington, DC 20549–0609. Applicants, Mary Ellyn Minenko, Vice President and Group Counsel, American Express Financial Advisors Inc., 50607 AXP Financial Center, Minneapolis, MN 55474.

FOR FURTHER INFORMATION CONTACT: Zandra Y. Bailes, Senior Counsel, or Lorna MacLeod, Branch Chief, Office of Insurance Products, Division of Investment Management, at (202) 942–0670.

SUPPLEMENTARY INFORMATION: The following is a summary of the Application. The complete Application may be obtained for a fee from the Commission's Public Reference Branch, 450 Fifth Street, NW, Washington, DC 20549–0102 (telephone (202) 942–8090).

Applicants' Representations

1. IDS Life is a stock life insurance company organized in 1957 under the laws of the State of Minnesota. IDS Life is registered with the Commission as a broker-dealer under the Securities Exchange Act of 1934 and is a member of the National Association of Securities Dealers. IDS Life is a wholly owned subsidiary of American Express Financial Corporation. IDS Life is the issuer and principal underwriter of the Contracts funded through the Accounts.

2. Account 10 is a segregated asset account of IDS Life. Account 10 funds the variable benefits available under RAVA Advantage. Account 10 and its component subaccounts are registered together with the Commission as a single unit investment trust under the Act (File No. 811–07355).

3. The Old Accounts are segregated asset accounts of IDS Life. The Old Accounts fund the variable benefits available under the IDS Life Variable Retirement Annuity (''VRA''), the IDS Life Combination Retirement Annuity (''CRA''), the IDS Life Flexible Annuity (''Flex'') and the IDS Life Employee Benefit Annuity (''EBA''). The Old Accounts are registered together with the Commission as a single unit investment trust under the Act (File No. 811–3217).

4. Applicants assert that in recent years the variable annuity marketplace has become increasingly competitive. Many of the purchasers of variable annuity contracts in the 1980s and early 1990s are at, or close to, the expiration of their deferred sales charge period, and the contract values of many contracts are no longer subject to a deferred sales charge. Holders of such contracts have become prime targets for

competitors' variable annuity sales efforts. One feature offered to variable annuity purchasers is a ''bonus'' or ''credit'' funded from the insurer's general account, generally ranging from 1–4% of contract value. IDS Life has experienced the effects of these ''bonus offers'' through the loss of a portion of its Old Contracts.

5. Applicants state that IDS Life's competitors are permitted to make bonus offers to IDS Life's Old Contract owners because offers of exchange to contract owners of unaffiliated insurance companies are not prohibited by section 11 of the Act by virtue of a no-action position granted to Alexander Hamilton Funds (pub. avail. July 20, 1994) (''Alexander Hamilton''). Applicants state that Alexander Hamilton stands for the proposition that, except for limited exceptions, exchange offers between unaffiliated investment companies are not prohibited under section 11. Consistent with section 11(a), therefore, a fund may impose a contingent deferred sales charge (''CDSC'') on shares purchased by investors with proceeds of shares from an unaffiliated fund.

6. Applicants assert that, but for the existence of the affiliated nature of the exchange, IDS Life would be able to offer an exchange program to its existing Old Contract owners that is similar to its competitors' programs. However, unlike its competitors who may make bonus offers to Old Contract owners, IDS Life is constrained from making a similar offer without first obtaining Commission approval of the terms of the exchange.

7. Applicants state that in response to this competitive situation IDS Life has developed an exchange offer (''Exchange Offer'') that would give eligible owners of Old Contracts the opportunity to exchange their existing Old Contracts for RAVA Advantage, an enhanced Contract that offers a lower mortality and expense risk (''M&E'') charge than the Old Contracts, credits on certain Purchase Payments (''Purchase Payment Credits''), more investment options (including all investment options available under the Old Contracts) and optional enhanced death benefits. IDS Life would apply a credit to certain exchanges (''Exchange Credit'') that would be in addition to any Purchase Payment Credit for which the Contract owner would otherwise be eligible under the RAVA Advantage Contract. Applicants state that the terms of the Exchange Offer are designed to respond to IDS Life's competitive dilemma and to assure that persisting Contract owners who accept the Exchange Offer receive an immediate and enduring economic benefit.

The New Contract

8. RAVA Advantage is registered under the Securities Act of 1933 (the ''1933 Act'') (File No. 333–79311). RAVA Advantage may be issued as a nonqualified annuity for after-tax contributions only, or as a qualified annuity under the following retirement plans: (i) Individual Retirement Annuities (''IRAs''); (ii) Simplified Employee Pension (''SEP'') plans; (iii) Section 401(k) plans; (iv) custodial and trusteed plans; or (v) Tax-Sheltered Annuities (''TSAs''). RAVA Advantage may be purchased: (i) with a minimum initial payment of $1,000 for qualified annuities or $2,000 for nonqualified annuities; or (ii) in minimum installments of $50 per month or $23.08 biweekly under a scheduled payment plan. An owner may make additional payments, which require a $50 minimum (unless payments are made by installments under a scheduled payment plan), subsequent to the initial payment (initial payments and subsequent additional payments are individually and collectively referred to herein as ''Purchase Payments''). Maximum limitations on Purchase Payments are imposed for the first year and subsequent years, depending on the age of the owner or annuitant.

9. Owners of RAVA Advantage Contracts may allocate their Purchase Payments among 56 subaccounts of Account 10. The subaccounts invest in 56 corresponding funds or portfolios (collectively, ''Investment Funds''). IDS Life, at a later date, may determine to create additional subaccounts to invest in any additional Investment Funds as may now or in the future be available. IDS Life, from time to time, also may combine or eliminate subaccounts, or transfer the assets to and from subaccounts. IDS Life also may substitute the Investment Funds in which the subaccounts invest under certain conditions. RAVA Advantage also offers a fixed account investment option with a guaranteed interest rate of at least 3% on an annual basis.

10. Owners of RAVA Advantage Contracts may transfer contract values among the RAVA Advantage subaccounts without charge, although IDS Life reserves the right to limit the number of transfers in a contract year. Transfers to and from the fixed account are permitted, subject to certain restrictions described in the prospectus for the RAVA Advantage Contracts.

11. Each time IDS Life receives a Purchase Payment from an owner, it allocates to the owner's RAVA Advantage account a Purchase Payment Credit equal to: (i) 1% of each Purchase Payment received if the owner elected the ten-year CDSC period for RAVA Advantage, or if the owner elected the seven-year CDSC period and the initial Purchase Payment is at least $100,000; or (ii) 2% of each Purchase Payment received if the owner elected the ten-year CDSC period and the initial Purchase Payment is at least $100,000. IDS Life funds Purchase Payment Credits from its general account assets. IDS Life recaptures certain Purchase Payment Credits from an owner under the following circumstances: (i) any Purchase Payment Credit applied if the owner returns the RAVA Advantage Contract to IDS Life for a refund during the free look period; (ii) Purchase Payment Credits applied within twelve months preceding the date of death that results in a lump sum death benefit under the RAVA Advantage Contract; or (iii) Purchase Payment Credits applied within twelve months preceding a request for a surrender due to the owner or annuitant's confinement to a nursing home. The amount the owner receives in each of these circumstances always will equal and normally will exceed the surrender value of the RAVA Advantage Contract.

12. The owner of a RAVA Advantage Contract can access contract values at any time before annuity payouts begin by means of partial surrenders or a full surrender. In addition, RAVA Advantage permits the owner to withdraw certain amounts without incurring a CDSC (the ''Free Withdrawal Amount''). Under RAVA Advantage, this Free Withdrawal Amount equals earnings or up to 10% of the prior anniversary contract value per contract year (if not already included in earnings).

A. The RAVA Advantage Contract standard death benefit is available at no extra charge. This standard death benefit provision states that, upon the earlier of the owner's or annuitant's death, before annuity payouts begin and while the Contract is in force, IDS Life will pay the following death benefits to the designated beneficiary: (i) if both the owner and annuitant are age 80 or younger on the date of death, the beneficiary will receive the greatest of (a) the contract value; (b) Purchase Payments, minus any adjusted partial surrenders; or (c) the contract value as of the most recent sixth contract anniversary, plus any Purchase Payments made, and minus any adjusted partial surrenders since that anniversary; or (ii) if either the owner or annuitant are age 81 or older on the date of death, the beneficiary receives the

greater of (a) the contract value; or (b) Purchase Payments, minus any adjusted partial surrenders.

14. The RAVA Advantage Contract also offers three optional death benefits. The Maximum Anniversary Value Death Benefit (the ''MAV Death Benefit'') is an optional death benefit that is available at the election of the Contract owner for an extra cost of 0.15% deducted from the contract value on the contract anniversary at the end of each contract year. This MAV Death Benefit is available (in approved states) if both the owner and annuitant are age 75 or younger at Contract issue. The MAV Death Benefit states that, upon the earlier of the owner's or annuitant's death, before annuity payouts begin and while the Contract is in force, IDS Life will pay the designated beneficiary the Maximum Anniversary Value (the ''MAV''). On the first contract anniversary, IDS Life sets the MAV equal to the highest of the (i) current contract value; or (ii) total Purchase Payments minus adjusted partial surrenders. Every contract anniversary after that, through the earlier of the owner's or annuitant's age 80, IDS Life compares the previous anniversary's MAV plus subsequent Purchase Payments less subsequent adjusted partial surrenders to the contract value and resets the MAV if the current contract value is higher. IDS Life stops resetting the MAV after the owner or annuitant reaches age 81. However, IDS Life continues to add subsequent Purchase Payments and subtract adjusted partial surrenders from the MAV.

15. The Enhanced Earnings Death Benefit (the ''EEB'') is an optional death benefit that is available at the election of the Contract owner at an extra cost of 0.30% deducted from the contract value on the contract anniversary at the end of each contract year. This benefit is available (in approved states) if both the owner and annuitant are age 75 or younger at Contract issue. The EEB is only available under nonqualified annuities. The EEB states that, upon the earlier of the owner's or annuitant's death, after the first contract anniversary but before annuity payouts begin and while this Contract is in force, IDS Life will pay the designated beneficiary the standard death benefit or the MAV Death Benefit, if applicable plus: (i) 40% of earnings at death if the owner and the annuitant were under age 70 on the rider effective date, up to a maximum of 100% of Purchase Payments not previously surrendered that are one or more years old; or (ii) 15% of earnings at death if the owner or the annuitant were age 70 to 75 on the rider effective date, up to a maximum of 37.5% of Purchase Payments not previously surrendered that are one or more years old.

16. The Enhanced Earnings Benefit Plus (the ''EEP'') is an optional death benefit that is available at the election of the Contract owner at an extra cost of 0.40% deducted from the contract value on the contract anniversary at the end of each contract year. This benefit is available (in approved states) if both the owner and annuitant are age 75 or younger at Contract issue. The EEP is only available under nonqualified annuities purchased through an exchange. The EEP states that, upon the earlier of the owner's or annuitant's death, after the first contract anniversary but before annuity payouts begin and while this Contract is in force, IDS Life will pay the designated beneficiary: (i) EEP Part I benefits, which equal the benefits payable under the EEB described above; plus (ii) EEP Part II benefits, which equal a percentage of exchanged Purchase Payments identified at issue and not previously surrendered ranging from 0% to 20%, depending on the contract year and the age of the owner and annuitant.

17. The RAVA Advantage Contract contains five annuity payout options: (i) Life annuity—no refund; (ii) life annuity with five, ten or 15 years certain; (iii) life annuity—installment refund; (iv) joint and last survivor life annuity—no refund; and (v) payouts for a specified period. IDS Life also may agree to other payout arrangements. Annuity payouts are available on a fixed or variable basis, or a combination of both.

18. A RAVA Advantage Contract owner can elect to have the variable subaccount portion of the contract value automatically rebalanced on either a quarterly, semi-annual or annual basis, based on the allocations chosen by the Contract owner. There is no additional cost for asset rebalancing.

19. Under RAVA Advantage, IDS Life assesses a CDSC against partial or full surrenders in excess of the Free Withdrawal Amount. IDS Life applies a CDSC on each Purchase Payment. The length of time from receipt of a Purchase Payment to the time of surrender determines the percentage of CDSC. Under the seven-year CDSC period, the CDSC ranges from 7% in year 1 to 0% in year 8 and after. Under the ten-year CDSC period, the CDSC ranges from 8% in year 1 to 0% in year 11 and after. The RAVA Advantage Contract provides for a waiver of the CDSC if the owner or annuitant is confined to a nursing home, and has been for the prior 90 days, and confinement began after the contract date. Additionally, IDS Life does not assess a CDSC on contract earnings; Free Withdrawal Amounts; required minimum distributions (for those amounts required to be distributed from the RAVA Advantage Contract); amounts refunded during the free look period; death benefits; or if payments are made under any annuity payout option.

20. During the life of the RAVA Advantage Contract, IDS Life deducts an M&E charge at an annual rate of 0.95% of the average daily subaccount value for nonqualified annuity Contracts and 0.75% of the average daily subaccount value for qualified annuity Contracts. IDS Life deducts a charge for administrative expenses annually from the contract value of each RAVA Advantage Contract. The annual contract administrative charge is $30 per contract year. IDS Life waives this charge when the contract value, or total Purchase Payments made less any Purchase Payments surrendered, is $50,000 or more on the current contract anniversary.

21. IDS Life deducts premium taxes of up to 3.5%, if applicable. Currently, IDS Life deducts any applicable premium tax when annuity payouts begin. However, IDS Life reserves the right to deduct this tax at other times such as when the Contract is surrendered.

22. Assets invested in the Investment Funds are charged with the annual operating expenses of those Funds.

The Old Contracts

23. VRA and CRA are registered together under the 1933 Act (File No. 2–73114). IDS Life no longer offers VRA Contracts. IDS Life offers CRA contracts only for limited purposes. VRA and CRA both were issued as nonqualified annuities for after-tax contributions only, or as qualified annuities under the following retirement plans: (i) IRAs; (ii) SEP plans; (iii) Section 401(k) plans; (iv) custodial and trusteed plans; (v) TSAs, or (vi) Section 457 plans. VRA was purchased with a single Purchase Payment between $5,000 and $500,000. No additional Purchase Payments are allowed for VRA. CRA may be purchased (i) with a minimum initial Purchase Payment of $600; or (ii) in minimum installments of $50 per month or $23.08 biweekly under a scheduled payment plan. An owner may make additional Purchase Payments to CRA, which require a $50 minimum (unless Purchase Payments are made by installments under a scheduled payment plan), subsequent to the initial Purchase Payment. Maximum limitations on Purchase Payments are imposed for the first year and subsequent years, depending on

whether the annuity is nonqualified or qualified. Participants in the CRA Select University of Wisconsin TSA Plan (''CRA Select'') may buy CRA with installment payments of $200 to $25,000 annually.

24. Owners of VRA and CRA Contracts may allocate their Purchase Payments among 14 Old Accounts that invest in 14 corresponding Investment Funds (all of which currently are available under RAVA Advantage). IDS Life, at a later date, may determine to create additional Accounts to invest in any additional Investment Funds as may now or in the future be available. CRA also offers a fixed account investment option with a guaranteed interest rate of 3.5% to 4% on an annual basis depending on when the CRA Contract was issued. VRA does not have a fixed account investment option.

25. Owners of VRA and CRA Contracts may transfer contract values among the Old Accounts without charge. Transfers to and from CRA's fixed account are permitted, subject to certain restrictions described in the prospectus for the CRA Contracts.

26. The owner of a VRA or CRA Contract can access contract values at any time before annuity payouts begin by means of partial surrenders or a full surrender. In addition, VRA permits the owner a Free Withdrawal Amount of up to 10% of the initial Purchase Payment amount each year after the first without incurring a CDSC. CRA Select offers an annual Free Withdrawal Amount of 10% of the contract value at the beginning of each contract year. There are no other Free Withdrawal Amounts under CRA.

27. VRA and CRA Contracts death benefit provisions state that, upon the earlier of the owner's or annuitant's death before annuity payouts begin and while the Contract is in force, IDS Life will pay the following death benefits to the designated beneficiary: (i) if death occurs before the annuitant's 75th birthday, the beneficiary receives the greater of (a) the contract value; or (b) Purchase Payments, minus any surrenders, or (ii) if death occurs on or after the annuitant's 75th birthday, the beneficiary receives the contract value.

28. The VRA and CRA Contracts contain the same annuity payout options as the RAVA Advantage Contract. Annuity payouts are available on a fixed or variable basis, or a combination of both.

29. Under VRA, IDS Life assesses a CDSC against partial or full surrenders in excess of the Free Withdrawal Amount. The CDSC applies to surrenders in the first seven contract years. IDS Life assesses a CDSC as a percentage of the amount surrendered. The CDSC ranges from 7% in the first contract year to 0% after 7 contract years. Under CRA, IDS Life assesses a CDSC against partial or full surrenders (in excess of the Free Withdrawal Amount for CRA Select). The CDSC is a percentage of the amount surrendered. Three separate CDSC periods apply to three different versions of CRA. For the original CRA, which is no longer sold, the CDSC applies to surrenders in the first eleven contract years and ranges from 7% in the first contract year to 0% after 11 contract years. For CRA Select, which currently is sold to fund the University of Wisconsin TSA Plan, the CDSC applies to surrenders in the first eight contract years and ranges from 7% in the first contract year to 0% after 8 contract years. For the CRA version that currently is sold for conversions from American Express Retirement Services or other IDS Life retirement annuities under which conversion is available, the CDSC applies to surrenders in the first seven contract years and ranges from 6% in the first contract year to 0% after 7 contract years. Under all VRA and CRA Contracts, the CDSC is further limited so that it will never exceed 8.5% of aggregate Purchase Payments made to the Contract. IDS Life does not assess a CDSC on Free Withdrawal Amounts under any VRA or CRA Select Contract; required minimum distributions (for those amounts required to be distributed from the VRA or CRA Contract); amounts refunded during the free look period; death benefits; or if payments are made under any annuity payout option.

30. During the life of each VRA and CRA Contract, IDS Life deducts an M&E charge at an annual rate of 1% of the average daily variable account value. IDS Life deducts a charge for administrative expenses annually from the contract value of each VRA and CRA Contract. The annual contract administrative charge is $20 per contract year for VRA and $30 per contract year for CRA.

31. IDS Life deducts premium taxes of up to 3.5%, if applicable. However, IDS Life reserves the right to deduct this tax at other times such as when Purchase Payments are made or when the Contract is surrendered.

32. Assets invested in the Investment Funds are charged with the annual operating expenses of those Funds.

33. Flex is registered under the 1933 Act (File No. 33–4173). IDS Life no longer offers Flex Contracts. Flex was issued as a nonqualified annuity for after-tax contributions only, or as a qualified annuity under the following retirement plans: (i) IRAs; (ii) SEP plans; (iii) Section 401(k) plans; (iv) custodial and trusteed plans; (v) TSAs; or (vi) Section 457 plans. Flex was purchased (i) with a minimum initial Purchase Payment of $1,000 for qualified annuities or $2,000 for nonqualified annuities; or (ii) in minimum installments of $50 per month or $23.08 biweekly under a scheduled payment plan. An owner may make additional Purchase Payments, which require a $50 minimum (unless Purchase Payments are made by installments under a scheduled payment plan), subsequent to the initial Purchase Payment. Maximum limitations on Purchase Payments are imposed for the first year, depending on the age of the owner or annuitant, and for each subsequent year.

34. Owners of Flex Contracts may allocate their Purchase Payments among the 14 Old Accounts that invest in 14 corresponding Investment Funds (all of which currently are available under RAVA Advantage). IDS Life, at a later date, may determine to create additional Accounts to invest in any additional Investment Funds as may now or in the future be available. Flex also offers a fixed account investment option with guaranteed interest rates ranging from 3% to 4% on an annual basis, depending on when the Flex Contract was issued.

35. Owners of Flex Contracts may transfer contract values among the Old Accounts without charge. Transfers to and from the fixed account are permitted, subject to certain restrictions described in the prospectus for the Flex Contracts.

36. The owner of a Flex Contract can access contract values at any time before annuity payouts begin by means of partial surrenders or a full surrender. In addition, Flex permits the owner a Free Withdrawal Amount of contract earnings without incurring a CDSC.

37. The Flex Contract death benefit provision states that, upon the earlier of the owner's or annuitant's death before annuity payouts begin and while the Contract is in force, IDS Life will pay the following death benefits to the designated beneficiary: (i) if death occurs before the annuitant's 75th birthday, the beneficiary receives the greatest of (a) the contract value; or (b) the contract value as of the most recent sixth contract anniversary, minus any surrenders since that anniversary; or (c) Purchase Payments, minus any surrenders; or (ii) if death occurs on or after the annuitant's 75th birthday, the beneficiary receives the greater of (a) the contract value; or (b) the contract value as of the most recent sixth contract anniversary, minus any surrenders since that anniversary.

38. Flex contains the same five annuity payout options as the RAVA Advantage Contract. Annuity payouts are available on a fixed or variable basis, or a combination of both.

39. Under Flex, IDS Life assesses a CDSC against partial or full surrenders in excess of the Free Withdrawal Amount. IDS Life applies a CDSC of 7% on each Purchase Payment. IDS Life deducts this CDSC if the Contract owner requests a surrender within six years of making that Purchase Payment. The Flex Contract provides for a waiver of the CDSC for amounts surrendered after the later of the annuitant's attaining age 65 or the tenth contract anniversary. Additionally, IDS Life does not assess a CDSC on contract earnings; required minimum distributions (for those amounts required to be distributed from the Flex Contract); death benefits; or if payments are made under any annuity payout option.

40. During the life of the Flex Contract, IDS Life deducts an M&E charge at an annual rate of 1% of the average daily variable account value. IDS Life deducts a charge for administrative expenses at the end of each contract quarter from the contract value of the Flex Contract. The quarterly contract administrative charge is $6 (which equals an annual charge of $24 per contract year).

41. IDS Life deducts premium taxes of up to 3.5%, if applicable. Currently, IDS Life deducts any applicable premium tax when annuity payouts begin. However, IDS Life reserves the right to deduct this tax at other times such as when Purchase Payments are made or when the Contract is surrendered.

42. Assets invested in the Investment Funds are charged with the annual operating expenses of those Funds.

43. EBA is registered under the 1933 Act (File No. 33–52518). IDS Life no longer offers EBA Contracts. EBA was issued only as a group TSA. EBA was purchased (i) with a minimum initial Purchase Payment of $1,000; or (ii) in minimum installments of $25 per month or $300 annually under a scheduled payment plan. An owner may make additional Purchase Payments, which require a $50 minimum (unless Purchase Payments are made by installments under a scheduled payment plan), subsequent to the initial Purchase Payment. Maximum limitations on Purchase Payments are imposed for the first year, depending on the age of the Contract owner, and for each subsequent year.

44. Owners of EBA Contracts may allocate their Purchase Payments among the 14 Old Accounts that invest in 14 corresponding Investment Funds (all of which currently are available under RAVA Advantage). IDS Life, at a later date, may determine to create additional Accounts to invest in any additional Investment Funds as may now or in the future be available. EBA also offers a fixed account investment option with a guaranteed interest rate of 4% on an annual basis.

45. Owners of EBA Contracts may transfer contract values among the Old Accounts without charge. Transfers to and from the fixed account are permitted, subject to certain restrictions described in the prospectus for the EBA Contracts.

46. Subject to certain restrictions imposed by the Internal Revenue Code, the owner of an EBA Contract can access certificate values at any time before annuity payouts begin by means of partial surrenders or a full surrender.

47. The EBA Contract death benefit provision states that, upon the owner/annuitant's death before annuity payouts begin and while the Contract is in force, IDS Life will pay the following death benefits to the designated beneficiary: (i) if death occurs before the annuitant's 75th birthday, the beneficiary receives the greatest of (a) the certificate value; or (b) Purchase Payments, minus any surrenders; or (ii) if death occurs on or after the annuitant's 75th birthday, the beneficiary receives the certificate value.

48. EBA contains the same five annuity payout options as the RAVA Advantage Contract. Annuity payouts are available on a fixed or variable basis, or a combination of both.

49. Under EBA, IDS Life assess a CDSC against partial or full surrenders. The CDSC applies to surrenders in the first eleven certificate years. IDS Life assesses a CDSC as a percentage of the amount surrendered. The CDSC ranges from 8% in the first certificate year to 0% after 11 certificate years. The CDSC is further limited so that it will never exceed 8.5% of aggregate Purchase Payments made to the Contract. The EBA Contract provides for a waiver of the CDSC for amounts surrendered due to the owner's retirement under the TSA plan on or after age 55. Additionally, IDS Life does not assess a CDSC on required minimum distributions (for those amounts required to be distributed from the EBA Contract); amounts refunded during the free look period; death benefits; or if payments are made under any annuity payout option.

50. During the life of the EBA Contract, IDS Life deducts an M&E charge at an annual rate of 1% of the average daily variable account value. IDS Life deducts a charge for administrative expenses at the end of each certificate year from the certificate value of the EBA Contract. The annual administrative charge is $30 per certificate year.

51. IDS Life deducts premium taxes of up to 3.5%, if applicable. Currently, IDS Life deducts any applicable premium tax when annuity payouts begin. However, IDS Life reserves the right to deduct this tax at other times such as when Purchase Payments are made or when the Contract is surrendered.

52. Assets invested in the Investment Funds are charged with the annual operating expenses of those Funds.

53. Applicants represent that the features and benefits of RAVA Advantage will be no less favorable than under the Old Contracts, with some exceptions for differences in the guaranteed interest rate under the fixed account investment option, lower annuity settlement rates and lower initial death benefits. Applicants also represent that, with some exceptions for the CDSC, the charge for administrative expenses and optional charges for optional death benefits, the fees and charges of the RAVA Advantage Contract will be no higher than those of the Old Contracts.

Terms of the Exchange Offer

54. Applicants propose to offer eligible owners of Old Contracts the opportunity to exchange their Old Contracts for RAVA Advantage by means of the Exchange Offer. Partial exchanges will not be permitted.

55. Initially, to be eligible for the Exchange Offer, an Old Contract owner must meet all of the following criteria: (i) Have completed ten or more contract or certificate years under the Old Contract; (ii) have not made Purchase Payments greater than $2,000 in any tax year under the Old Contract in the 36 months prior to accepting the Exchange Offer (except for installment payments made under a scheduled payment plan); (iii) have a contract or certificate value (''Exchange Value'') (plus any additional transfers or rollovers) that is at least equal to $100,000; (iv) have a remaining CDSC of 2% or less of the contract or certificate value of the Old Contract; and (v) own a qualified annuity Contract. IDS Life reserves the right to extend the Exchange Offer to owners of Contracts who have completed less than ten contract or certificate years under the Old Contract, to owners of nonqualified annuity Contracts and to owners of Old Contracts with Exchange Values of less than $100,000.

56. Due to market volatility, the Exchange Value (plus any additional transfers or rollovers for qualified

annuity Contracts, or any additional Purchase Payments or exchanges for nonqualified annuity Contracts, individually and collectively the ''Additional Amounts'') may drop below the $100,000 eligible value between the time the internal exchange form and application are completed and mailed and the time they are received by IDS Life. If the Exchange Value (plus any Additional Amounts) does not drop more than 5% below the $100,000 eligible value, the Old Contract owner would still be eligible to participate in the Exchange Offer. If the Exchange Value (plus any Additional Amounts) drops more than 5% below the $100,000 eligible value, the Old Contract owner will not be eligible to participate in the Exchange Offer at that time. However, the internal exchange form and application can be resubmitted at a later date when the Exchange Value of the Old Contract (plus any Additional Amounts) meets the eligibility requirements.

57. Under RAVA Advantage, if the initial Purchase Payment is at least $100,000, IDS Life will allocate a Purchase Payment Credit equal to 1% of the initial purchase payment and 1% of each subsequent Purchase Payment received. Due to market volatility, the Exchange Value (plus any Additional Amounts) may drop below this $100,000 initial Purchase Payment amount. To increase the likelihood of remaining eligible to receive the 1% Purchase Payment Credit, the Old Contract owner could transfer that contract or certificate value allocated to the Old Accounts to the Old Account investing in the AXP VP Cash Management Fund while the exchange is pending to help reduce the risk of market volatility. The Old Contract owner then would be eligible for the Purchase Payment Credit of 1% of each Purchase Payment received based on an initial Purchase Payment of $100,000. IDS Life also would allocate a Purchase Payment Credit of 1% of each Purchase Payment received if the owner elects the ten-year CDSC period.

58. If, due to market volatility, the initial Purchase Payment into RAVA Advantage drops below $100,000, IDS Life will provide, from its general account assets, a 1% Exchange Credit based on the Purchase Payment applied to RAVA Advantage on that day the exchange is effected (''Exchange Date''). This 1% Exchange Credit will not apply to subsequent Purchase Payments into RAVA Advantage. IDS would still allocate a Purchase Payment Credit of 1% of each Purchase Payment received if the owner elects the ten-year CDSC period.

59. IDS Life also reserves the right to extend the Exchange Offer to owners of Old Contracts with Exchange Values of less than $100,000. IDS Life will provide, from its general account assets, a 1% Exchange Credit based on the Exchange Value of the Old Contract. This 1% Exchange Credit will not apply to subsequent Purchase Payments into RAVA Advantage. IDS Life would still allocate a Purchase Payment Credit of 1% of each Purchase Payment received if the owner elects the ten-year CDSC period.

60. Upon the owner's acceptance of the Exchange Offer, IDS Life will issue a RAVA Advantage Contract with all applicable Purchase Payment Credits and Exchange Credits. No CDSC will be deducted upon the surrender of an Old Contract in connection with the exchange. The Exchange Value of each Old Contract, together with any applicable Additional Amounts, Purchase Payment Credits and Exchange Credits, will be applied to the new RAVA Advantage Contract as of the Exchange Date. The Exchange Date will be the contract date of the new RAVA Advantage Contract for purposes of determining contract years and anniversaries after the Exchange Date.

61. If the owner of the new RAVA Advantage Contract exercises the free-look option, IDS Life will recapture any Purchase Payment Credits and Exchange Credits. IDS Life will reverse either the RAVA Advantage contract value (less any Purchase payment Credits and Exchange Credits) or the Purchase Payment made to the RAVA Advantage Contract, depending on applicable law. IDS Life will apply this amount to restore the Old Contract to the extent possible. IDS Life will allocate this amount to the selected Old Contract investments in the proportions that existed just prior to the exchange. Any adjustments made due to investment experience will be allocated or deducted according to the selected investment percentage allocations under the Old Contract just prior to the exchange. Withdrawals made after the free look period under RAVA Advantage has expired will be governed by the terms of the RAVA Advantage Contract, including the application of the CDSC. To the extent a death benefit or surrender payment includes any Purchase Payment Credit and Exchange Credit amounts: (i) applied within twelve months preceding the date of death that results in a lump sum death benefit under RAVA Advantage; or (ii) applied within twelve months preceding a request for a CDSC waiver due to nursing home confinement, IDS Life will recapture the Purchase Payment Credits and Exchange Credits.

62. IDS Life will notify all owners of the Old Contracts of the Exchange Offer through normal client communications such as updated prospectuses or prospectus supplements (''Program Announcement''). This Program Announcement: (i) Will describe the terms and conditions of the Exchange Offer; (ii) suggest to owners who may qualify that they contact their registered representatives to learn more about the Exchange Offer and to discuss their individual situations (including tax, financial planning and Contract considerations); and (iii) notify owners that IDS Life reserves the right to cancel the Exchange Offer at any time. In addition, IDS Life may send the information in the Program Announcement to some or all Old Contract owners via additional communications that also may include that owner's specific Contract information (such as Exchange Value and applicable CDSC).

63. IDS Life, either directly or through its registered representatives, will provide eligible Old Contract owners who are interested in learning more about the Exchange Offer with an Offering Communication that includes information outlined in the Program Announcement and additional information describing the Exchange Offer. The Offering Communication will state, in clear and plain English, that the Exchange Offer is not designed for a Contract owner who: (i) intends to hold the RAVA Advantage Contract as a short-term investment vehicle; or (ii) anticipates surrendering all or part (*i.e.* more than the 10% Free Withdrawal Amount on an annual basis) of his or her RAVA Advantage Contract before five to seven years (if the Old Contract owner would choose the seven-year CDSC period under RAVA Advantage) or eight to ten years (if the Old Contract owner would choose the ten-year CDSC period under RAVA Advantage). IDS Life will encourage Old Contract owners to carefully evaluate their personal financial planning situation when deciding whether to accept or reject the Exchange Offer.

64. In addition, the Offering Communication will explain how the owner of an Old Contract contemplating an exchange may avoid the applicable CDSC on the RAVA Advantage Contract by not surrendering more than the annual Free Withdrawal Amount and by holding any subsequent Purchase Payments until expiration of the CDSC period. In this regard, IDS Life will state, in clear and plain English, that if the owner surrenders the RAVA

Advantage Contract during the initial CDSC period: (i) the lower M&E charges and any applicable Purchase Payment Credits and Exchange Credits may be more than offset by the CDSC; and (ii) an Old Contract owner may be worse off than if he or she had rejected the Exchange Offer.

65. Furthermore, IDS Life will state, in clear and plain English, that guaranteed annuity settlement rates generally are lower under RAVA Advantage. Therefore, if the Old Contract owner contemplates annuitizing the RAVA Advantage Contract during the first few years, the lower settlement factors may more than offset the lower M&E charges and any applicable Purchase Payment Credits and Exchange Credits.

66. IDS Life will explain that due to market volatility, the Exchange Value (plus any Additional Amounts) may drop below $100,000 between the time the internal exchange form and application are completed and mailed and the time they are received by IDS Life. An Old Contract owner could transfer that contract or certificate value allocated to the Old Accounts to the Old Account investing in the AXP VP Cash Management Fund while the exchange is pending to help reduce the risk of market volatility and help preserve the $100,000 initial Purchase Payment into RAVA Advantage. In that case, the Old Contract owner would be eligible for the Purchase Payment Credit of 1% of each Purchase Payment received based on an initial Purchase Payment of $100,000. If, due to market volatility, the initial Purchase Payment into RAVA is less than $100,000, IDS Life will provide a 1% Exchange Credit based on the Purchase Payment applied to RAVA Advantage on the Exchange Date. Similarly, if IDS Life extends the Exchange Offer to owners of Old Contracts with Exchange Values of less than $100,000, IDS Life will explain in the Offering Communication that it will provide a 1% Exchange Credit based on the Exchange Value of the Old Contract. The 1% Exchange Credit will not apply to subsequent Purchase Payments. IDS Life will allocate a Purchase Payment Credit of 1% of each Purchase Payment received if the owner elects the ten-year CDSC period.

67. In addition, IDS Life will prominently disclose that the guaranteed interest rate on RAVA Advantage's fixed account investment option may be less than the guaranteed interest rate on the Old Contract's fixed account investment option. IDS Life also will disclose that the current death benefit on the Old Contract may be greater than the initial death benefit on RAVA Advantage. When applicable, IDS Life also will explain that owners of Old Contracts may lose some tax benefits. Finally, the Offering Communication will state that IDS Life may terminate the Exchange Offer at any time. The Offering Communication also will include a prospectus for the new RAVA Advantage Contract.

68. To accept the Exchange Offer, the owner of an Old Contract must complete an internal exchange form and application for the RAVA Advantage Contract. Applicants state that those Old Contract owners who accept the Exchange Offer will incur no current taxes and that the exchanges will constitute tax-free transfers, rollovers or exchanges pursuant to section 1035 of the Internal Revenue Code.

69. The Exchange Offer is meant to encourage existing Old Contract owners to remain with IDS Life rather than surrender their Contracts in exchange for a competitor's product. If the CDSC under RAVA Advantage did not apply to the Exchange Value, Applicants assert that IDS Life would have no assurance that an Old Contract owner who accepted the Exchange Offer would persist long enough for any applicable Purchase Payment Credits, Exchange Credits, payments to registered representatives and other relevant expenses to be recouped through standard fees from the ongoing operation of the RAVA Advantage Contract.

70. Applicants state that the commissions that IDS Life will pay its registered representatives for soliciting exchanges under the Exchange Offer are less than the normal commissions paid for soliciting sales of RAVA Advantage Contracts. Applicants assert that compensating IDS Life's registered representatives for these exchanges is necessary in order to provide sufficient incentive for them to compete with competitors' registered representatives.

71. IDS Life reserves the right to terminate the Exchange Offer at any time. If IDS Life terminates the Exchange Offer, it will send a notice to currently-eligible Old Contract owners (''Termination Notice''). The Termination Notice will state that Old Contract owners who wish to participate in the Exchange Offer must do so within two months from the date of the Termination Notice. The Termination Notice will contain all of the caveats described herein.

Applicants' Conditions

Applicants agree to the following conditions:

1. The Offering Communication and Termination Notice will contain concise, plain English statements that: (i) The Exchange Offer is suitable only for an Old Contract owner who expects to hold RAVA Advantage as a long-term investment; (ii) if the RAVA Advantage Contract is surrendered during the initial CDSC period or annuitized during the first few years, the lower M&E charges and any applicable Purchase Payment Credits and Exchange Credits may be more than offset by the CDSC or lower annuity settlement rates and an Old Contract owner may be worse off than if he or she had rejected the Exchange Offer; (iii) IDS Life will allocate an Exchange Credit of 1% on the initial Purchase Payment applied (but not on subsequent Purchase Payments received) if the initial Purchase Payment to the RAVA Advantage Contract is less than $100,000; (iv) the guaranteed interest rate on RAVA Advantage's fixed account option may be less than the guaranteed interest rate on the Old Contract's fixed account option; (v) the current death benefit on the Old Contract may be greater than the initial death benefit on RAVA Advantage; (vi) an Old Contract owner may lose some tax benefits (when applicable); and (vii) IDS Life reserves the right to terminate the Exchange Offer.

2. The Offering Communication will disclose in concise, plain English each aspect of the RAVA Advantage Contracts that could be less favorable than the Old Contracts.

3. IDS Life, either directly or through its registered representatives, will send an Offering Communication to eligible Old Contract owners who are interested in learning more about the Exchange Offer. An Old Contract owner choosing to exchange will then complete and sign an internal exchange form and RAVA Advantage application and return it to IDS Life. This internal exchange form will prominently restate in concise, plain English the caveats described above in Condition (1). If the internal exchange form is more than two pages long, IDS Life will use a separate document to obtain Contract owner acknowledgment of the caveats described in Condition (1).

4. IDS Life will maintain the following separately identifiable records in an easily accessible place for the time periods specified below in this Condition (4) for review by the Commission upon request: (i) Records showing the level of exchange activity and how it relates to the total number of Old Contract owners eligible to exchange (quarterly as a percentage of the number eligible); (ii) copies of any form of Program Announcements, Offering Communications, Termination

Notices and other written materials or scripts for presentations by registered representatives regarding the Exchange Offer that IDS Life either prepares or approves, including the dates that such materials were used; (iii) records containing information about each exchange transaction that occurs, including the name of the Contract owner, Old Contract and RAVA Advantage Contract numbers; the amount of CDSC waived on surrender of the Old Contract; Purchase Payment Credits and Exchange Credits paid; the name and CRD number of the registered representative soliciting the exchange, firm affiliation, branch office sales address, telephone number and the name of the registered representative's broker-dealer; commission paid; the internal exchange form (and separate document, if any, used to obtain the Old Contract owner's acknowledgement of the caveats required in Condition (1)) showing the name, date of birth, address and telephone number of the Contract owner and the date the internal exchange form (or separate document) was signed; amount of contract or certificate value exchanged, and persistency information relating to the RAVA Advantage Contract, including the date of any subsequent surrender and the amount of CDSC paid on the surrender; and (iv) logs showing a record of any Contract owner complaint about the exchange, state insurance department inquiries about the exchange, or litigation, arbitration, or other proceeding regarding any exchange. The logs will include the date of the complaint or commencement of the proceeding, name and address of the person making the complaint or commencing the proceeding, nature of the complaint or proceeding, and the persons named or involved in the complaint or proceeding. Applicants will retain records specified in (i) and (iv) for a period of six years after the date the records are created, records specified in (ii) for a period of six years after the date of last use, and records specified in (iii) for a period of two years after the date that the initial CDSC period of the RAVA Advantage Contract ends.

Applicants' Legal Analysis

1. Section 11(a) of the Act makes it unlawful for any registered open-end company, or any principal underwriter for such a company, to make or cause to be made an offer to the holder of a security of such company, or of any other open-end investment company, to exchange his or her security for a security in the same or another such company on any basis other than the relative net asset values of the respective securities, unless the terms of the offer have first been submitted to and approved by the Commission or are in accordance with Commission rules adopted under Section 11.

2. Section 11(c) of the Act, in pertinent part, requires, in effect, that any offer of exchange of the securities of a registered unit investment trust for the securities of any other investment company be approved by the Commission or satisfy applicable rules adopted under Section 11, regardless of the basis of the exchange.

3. The purpose of section 11 of the Act is to prevent ''switching,'' the practice of inducing security holders of one investment company to exchange their securities for those of a different investment company solely for the purpose of exacting additional selling charges. That type of practice was found by Congress to be widespread in the 1930s prior to the adoption of the Act.

4. Section 11(c) of the Act requires Commission approval (by order or by rule) of any exchange, regardless of its basis, involving securities issued by a unit investment trust, because investors in unit investment trusts were found by Congress to be particularly vulnerable to switching operations.

5. Applicants assert that the potential for harm to investors perceived in switching was its use to extract additional sales charges from those investors. Applicants further assert that the terms of the proposed Exchange Offer do not present the abuses against which Section 11 was intended to protect. The Exchange Offer was designed to allow IDS Life to compete on a level playing field with its competitors who are making bonus offers to its current Old Contract owners. No additional sales load or other fee will be imposed at the time of exercise of the Exchange Offer.

6. Rule 11a–2, by its express terms, provides Commission approval of certain types of offers of exchange of one variable annuity contract for another. Applicants assert that other than the relative net asset value requirement (which is not satisfied because exchanging Old Contract owners could potentially be given Purchase Payment Credits and Exchange Credits), the only part of Rule 11a–2 that would not be satisfied by the proposed Exchange Offer is the requirement that payments under the Old Contract be treated as if they had been made under the new RAVA Advantage Contract on the dates actually made. This provision of Rule 11a–2 is often referred to as a ''tacking'' requirement because it has the effect of ''tacking together'' the CDSC expiration periods of the exchanged and acquired contracts.

7. Applicants assert that the absence of tacking does not mean that an exchange offer cannot be attractive and beneficial to investors. Applicants state that the proposed Exchange Offer would assure an immediate and enduring economic benefit to investors for the following reasons: (i) RAVA Advantage has a lower M&E charge than the Old Contracts; (ii) RAVA Advantage Contract owners receive applicable Purchase Payment Credits and Exchange Credits; (iii) RAVA Advantage has more Investment Funds, giving RAVA Advantage owners the opportunity for greater diversification and asset allocation; and (iv) RAVA Advantage offers optional Enhanced Death Benefits, for an additional cost, that may provide substantive value to beneficiaries. Applicants assert that an owner who expects to hold RAVA Advantage as a long-term investment will receive the economic benefits of the Exchange Offer. No sales charge will ever be paid on the amounts exchanged unless the RAVA Advantage Contract is surrendered before expiration of the CDSC period that owner has chosen.

8. Applicants assert that tacking should be viewed as a useful way to avoid the need to scrutinize the terms of an offer of exchange to make sure that there is no abuse. Tacking is not a requirement of Section 11. Rather, it is a creation of a rule designed to approve the terms of offers of exchange ''sight unseen.'' Tacking focuses on the closest thing to multiple deduction of sales loads that is possible in a CDSC context—multiple exposure to sales loads upon surrender or redemption. If tacking and other safeguards of Rule 11a–2 are present, there is no need for the Commission or its staff to evaluate the terms of the offer. The absence of tacking in this fully scrutinized Section 11 application will have no impact on offers made pursuant to the rule on a ''sight unseen'' basis.

9. Applicants assert that the terms of the Exchange Offer are better than those of IDS Life's competitors. Unlike the Exchange Offer, when Old Contract owners exchange into competitors' contracts, they must pay any remaining CDSC on the Old Contracts at the time of the exchange. No tacking is required when IDS Life's competitors offer their variable annuity contracts to owners of Old Contracts or when IDS Life makes such an offer to competitors' contract owners.

10. To the extent there are differences in the Contracts, those differences relate to enhanced contractual features and charges that are fully described in the

prospectus for the RAVA Advantage Contract. Furthermore, the Offering Communication (and any Termination Notice) will contain concise, plain English statements that: (i) The Exchange Offer is suitable only for an Old Contract owner who expects to hold RAVA Advantage as a long-term investment; (ii) if the RAVA Advantage Contract is surrendered during the initial CDSC period or annuitized during the first few years, the lower M&E charges and any applicable Purchase Payment Credits and Exchange Credits may be more than offset by the CDSC or lower annuity settlement rates and an Old Contract owner may be worse off than if he or she had rejected the Exchange Offer; (iii) IDS Life will allocate an Exchange Credit of 1% on the initial Purchase Payment applied (but not on subsequent Purchase Payments received) if the initial Purchase Payment to the RAVA Advantage Contract is less than $100,000; (iv) the guaranteed interest rate on RAVA Advantage's fixed account option may be less than the guaranteed interest rate on the Old Contract's fixed account option; (v) the current death benefit on the Old Contract may be greater than the initial death benefit on RAVA Advantage; (vi) an Old Contract owner may lose some tax benefits (when applicable); and (vii) IDS Life reserves the right to terminate the Exchange Offer. Applicants assert that Contract owners should have the opportunity to decide, on the basis of full and fair disclosure, whether the enhancements of the RAVA Advantage Contract justify accepting the offer.

Conclusion

Applicants submit, for the reasons stated herein, that the Exchange Offer is consistent with the protections provided by Section 11 of the Act, and that approval of the Exchange Offer is necessary or appropriate in the public interest and consistent with the protection of investors and the purposes fairly intended by the policies and provisions of the Act. Applicants submit that the requested order approving the terms of the proposed Exchange Offer therefore should be granted.

For the Commission, by the Division of Investment Management, pursuant to delegated authority.

Margaret H. McFarland,

Deputy Secretary.

[FR Doc. 02–4054 Filed 2–19–02; 8:45 am]

BILLING CODE 8010–01–P

SECURITIES AND EXCHANGE COMMISSION

[Release No. IC–25421; 812–12760]

DFA Investment Dimensions Group Inc., et al.

February 13, 2002.

AGENCY: Securities and Exchange Commission (''SEC'' or the ''Commission'').

ACTION: Notice of Application for Exemption under Section 6(c) of the Investment Company Act of 1940, as amended (the ''1940 Act''), for an exemption from the provisions of Sections 9(a), 13(a), 15(a) and 15(b) of the 1940 Act, and Rules 6e–2(b)(15) and 6e–3(T)(b)(15), thereunder.

APPLICANTS: DFA Investment Dimensions Group Inc. (the ''Fund'') and Dimensional Fund Advisors, Inc. (''DFA'') (the Fund together with DFA, are the ''Applicants'').

SUMMARY OF APPLICATION: Applicants and certain life insurance companies and their separate accounts that currently invest or may hereafter invest in the Fund (and, to the extent necessary, any investment adviser, principal underwriter and depositor of such an account) seek exemptive relief from the provisions of Sections 9(a), 13(a), 15(a) and 15(b) of the 1940 Act, and Rules 6e–2(b)(15) and 6e–3(T)(b)(15) thereunder, to the extent necessary to permit shares of the Fund and shares of any other investment company or portfolio that is designed to fund insurance products and for which DFA or any of its affiliates may serve in the future as investment adviser, manager, principal underwriter, sponsor, or administrator (''Future Funds'') (the Fund, together with Future Funds, are the ''Funds'') to be sold to and held by: (i) separate accounts funding variable annuity and variable life insurance contracts (collectively referred to herein as ''Variable Contracts'') issued by both affiliated and unaffiliated life insurance companies; (ii) qualified pension and retirement plans (''Qualified Plans'') outside of the separate account context; (iii) separate accounts that are not registered as investment companies under the 1940 Act pursuant to exemptions from registration under Section 3(c) of the 1940 Act; (iv) DFA or certain related corporations (collectively ''DFA''); and (v) any other person permitted to hold shares of the Funds pursuant to Treasury Regulation 1.817–5 (''General Accounts''), including the general account of any life insurance company whose separate account holds, or will hold, shares of the Funds or certain related corporations.

FILING DATES: The application was filed on January 18, 2002.

HEARING OR NOTIFICATION OF HEARING: An order granting the Application will be issued unless the SEC orders a hearing. Interested persons may request a hearing by writing to the SEC's Secretary and serving Applicants with a copy of the request, personally or by mail. Hearing requests should be received by the SEC by 5:30 p.m. on March 8, 2002, and should be accompanied by proof of service on Applicants, in the form of an affidavit or, for lawyers, a certificate of service. Hearing requests should state the nature of the writer's interest, the reason for the request, and the issues contested. Persons who wish to be notified of a hearing may request notification by writing to the Secretary of the SEC.

ADDRESSES: Secretary, SEC, 450 5th Street, NW., Washington, DC, 20549–0609. Applicants, c/o Stradley, Ronon, Stevens & Young, LLP, 2600 One Commerce Square, Philadelphia, PA 19103–7098, Attention: Mark A. Sheehan, Esq.

FOR FURTHER INFORMATION CONTACT: Patrick Scott, Attorney, or Lorna MacLeod, Branch Chief, Office of Insurance Products, Division of Investment Management, at (202) 942–0670.

SUPPLEMENTARY INFORMATION: The following is a summary of the Application. The complete Application is available for a fee from the SEC's Public Reference Branch, 450 Fifth Street, NW., Washington, DC 20549–0102 ((202) 942–8090).

Applicants' Representations

1. The Fund is registered with the Commission as an open-end management investment company and is organized as a Maryland corporation. DFA is registered with the Commission as an investment adviser under the Investment Advisers Act of 1940, as amended, and serves as the investment adviser to the Fund. The Fund currently consists of thirty-eight investment portfolios, including six investment portfolios that are sold only to separate accounts of insurance companies in conjunction with variable life and variable annuity contracts: VA Small Value Portfolio, VA Large Value Portfolio, VA International Value Portfolio, VA International Small Portfolio, VA Short-Term Fixed Portfolio and VA Global Bond Portfolio (each, a ''Portfolio,'' and collectively, the ''Portfolios''). The Fund or any Future Funds may offer one or more

additional investment portfolios in the future (also referred to as ''Portfolios'').

2. Shares of the Portfolios will be offered to separate accounts of affiliated and unaffiliated insurance companies (each, a ''Participating Insurance Company'') to serve as investment vehicles to fund Variable Contracts. These separate accounts either will be registered as investment companies under the 1940 Act or will be exempt from such registration pursuant to exemptions from registration under Section 3(c) of the 1940 Act (individually, a ''Separate Account'' and collectively, the ''Separate Accounts''). Shares of the Portfolios may also be offered to Qualified Plans, DFA or certain related corporations (collectively ''DFA''), and any other person permitted to hold shares of the Funds pursuant to Treasury Regulation 1.817–5 (''General Accounts''), including the general account of any life insurance company whose separate account holds, or will hold, shares of the Funds or certain related corporations.

3. The Participating Insurance Companies at the time of their investment in the Funds either have or will establish their own Separate Accounts and design their own Variable Contracts. Each Participating Insurance Company has or will have the legal obligation of satisfying all applicable requirements under both state and federal law. Each Participating Insurance Company, on behalf of its Separate Accounts, has or will enter into an agreement with the Funds concerning such Participating Insurance Company's participation in the Portfolios. The role of the Funds under this agreement, insofar as the federal securities laws are applicable, will consist of, among other things, offering shares of the Portfolios to the participating Separate Accounts and complying with any conditions that the Commission may impose upon granting the order requested herein.

4. On November 29, 1994, the Commission issued an order granting exemptive relief to permit shares of the Funds to be sold to and held by variable annuity and variable life insurance separate accounts of both affiliated and unaffiliated life insurance companies (Investment Company Act Release No. 20743, File No. 812–9154) (the ''Original Order''). The Original Order allows the Fund to offer its shares to insurance companies as the investment vehicle for their separate accounts supporting Variable Contracts. The Original Order does not include the Future Funds as parties, nor expressly address the sale of shares of the Funds or any Future Funds to Qualified Plans, unregistered separate accounts, DFA or General Accounts. Applicants propose that the Future Funds be added as parties to the Original Order and the Funds and any Future Funds be permitted to offer and sell their shares to Qualified Plans, unregistered separate accounts, DFA and the General Accounts.

Applicants' Legal Analysis

1. Applicants and certain life insurance companies and their Separate Accounts that currently invest or may hereafter invest in the Fund (and, to the extent necessary, any investment adviser, principal underwriter and depositor of such an account) seek exemptive relief from the provisions of Sections 9(a), 13(a), 15(a) and 15(b) of the 1940 Act, and Rules 6e–2(b)(15) and 6e–3(T)(b)(15) thereunder, to the extent necessary to permit shares of the Portfolios and shares of any Future Funds to be sold to and held by: (i) separate accounts funding Variable Contracts issued by both affiliated and unaffiliated life insurance companies; (ii) Qualified Plans outside of the separate account context; (iii) separate accounts that are not registered as investment companies under the 1940 Act pursuant to exemptions from registration under Section 3(c) of the 1940 Act; (iv) DFA or certain related corporations (collectively ''DFA''); and (v) any General Accounts, including the general account of any life insurance company whose separate account holds, or will hold, shares of the Funds or certain related corporations.

2. In connection with the funding of scheduled premium variable life insurance contracts issued through a separate account registered as a unit investment trust (''UIT'') under the 1940 Act, Rule 6e–2(b)(15) provides partial exemptions from Sections 9(a), 13(a), 15(a) and 15(b) of the 1940 Act. The relief provided by Rule 6e–2 is also granted to the investment adviser, principal underwriter, and depositor of the separate account. Section 9(a)(2) of the 1940 Act makes it unlawful for any company to serve as an investment adviser or principal underwriter of any UIT, if an affiliated person of that company is subject to a disqualification enumerated in Sections 9(a)(1) or (2) of the 1940 Act. Sections 13(a), 15(a) and 15(b) of the 1940 Act have been deemed by the Commission to require ''pass-through'' voting with respect to an underlying investment company's shares. Rule 6e–2(b)(15) provides these exemptions apply only where all of the assets of the UIT are shares of management investment companies ''which offer their shares exclusively to variable life insurance separate accounts of the life insurer or of any affiliated life insurance company.'' Therefore, the relief granted by Rule 6e–2(b)(15) is not available with respect to a scheduled premium life insurance separate account that owns shares of an underlying fund that also offers its shares to a variable annuity separate account or flexible premium variable life insurance separate account of the same company or any other affiliated insurance company. The use of a common management investment company as the underlying investment vehicle for both variable annuity and variable life insurance separate accounts of the same life insurance company or of any affiliated life insurance company is referred to herein as ''mixed funding.''

3. The relief granted by Rule 6e–2(b)(15) also is not available with respect to a scheduled premium variable life insurance separate account that owns shares of an underlying fund that also offers its shares to separate accounts funding Variable Contracts of one or more unaffiliated life insurance companies. The use of a common management investment company as the underlying investment vehicle for variable annuity and/or variable life insurance separate accounts of unaffiliated life insurance companies is referred to herein as ''shared funding.''

4. The relief under Rule 6e–2(b)(15) is available only where shares are offered exclusively to variable life insurance separate accounts of a life insurer or any affiliated life insurance company, additional exemptive relief is necessary if the shares of the Portfolios are also to be sold to Qualified Plans or other eligible holders of shares, as described above. Applicants note that if shares of the Portfolios are sold only to Qualified Plans, exemptive relief under Rule 6e–2 would not be necessary. The relief provided for under this section does not relate to Qualified Plans or to a registered investment company's ability to sell its shares to Qualified Plans. The use of a common management investment company as the underlying investment vehicle for variable annuity and variable life separate accounts of affiliated and unaffiliated insurance companies, and for Qualified Plans, is referred to herein as ''extended mixed and shared funding.''

5. In connection with flexible premium variable life insurance contracts issued through a separate account registered under the 1940 Act as a UIT, Rule 6e–3(T)(b)(15) provides partial exemptions from Sections 9(a), 13(a), 15(a) and 15(b) of the 1940 Act. The exemptions granted by Rule 6e–

3(T)(b)(15) are available only where all the assets of the separate account consist of the shares of one or more registered management investment companies that offer to sell their shares ''exclusively to separate accounts of the life insurer, or of any affiliated life insurance companies, offering either scheduled contracts or flexible contracts, or both; or which also offer their shares to variable annuity separate accounts of the life insurer or of an affiliated life insurance company or which offer their shares to any such life insurance company in consideration solely for advances made by the life insurer in connection with the operation of the separate account.'' Therefore, Rule 6e–3(T)(b)(15) permits mixed funding but does not permit shared funding. The exemptions are also granted to the investment adviser, principal underwriter and depositor of the separate account.

6. The relief under Rule 6e–3(T) is available only where shares are offered exclusively to variable life insurance separate accounts of a life insurer or any affiliated life insurance company, and additional exemptive relief is necessary if the shares of the Portfolios are also to be sold to Qualified Plans or other eligible holders of shares as described above. Applicants note that if shares of the Portfolios were sold only to Qualified Plans, exemptive relief under Rule 6e–3(T)(b)(15) would not be necessary. The relief provided for under this section does not relate to Qualified Plans or to a registered investment company's ability to sell its shares to Qualified Plans.

7. Applicants maintain, as discussed below, that there is no policy reason for the sale of the Portfolios' shares to Qualified Plans, to DFA, or General Accounts to result in a prohibition against, or otherwise limit, a Participating Insurance Company from relying on the relief provided by Rules 6e–2(b)(15) and 6e–3(T)(b)(15). However, because the relief under Rules 6e–2(b)(15) and 6e–3(T)(b)(15) is available only when shares are offered exclusively to separate accounts, additional exemptive relief may be necessary if the shares of the Portfolios are also to be sold to Qualified Plans, DFA or General Accounts. Applicants therefore request relief in order to have the participating insurance companies enjoy the benefits of the relief granted in Rules 6e–2(b)(15) and 6e–3(T)(b)(15). Applicants note that if the Portfolios' shares were to be sold only to Qualified Plans, DFA, General Accounts and/or separate accounts funding variable annuity contracts, exemptive relief under Rule 6e–2 and Rule 6e–3(T) would be unnecessary. The relief provided for under Rules 6e–2(b)(15) and 6e–3(T)(b)(15) does not relate to Qualified Plans, DFA, or General Accounts, or to a registered investment company's ability to sell its shares to such purchasers.

8. Applicants also note that the promulgation of Rules 6e–2(b)(15) and 6e–3(T)(b)(15) preceded the issuance of the regulations issued by the Treasury Department (''Regulations'') that made it possible for shares of an investment company portfolio to be held by the trustee of a Qualified Plan without adversely affecting the ability of shares in the same investment company portfolio also to be held by the separate accounts of insurance companies in connection with their Variable Contracts. Thus, the sale of shares of the same portfolio to both separate accounts and Qualified Plans was not contemplated at the time of the adoption of Rules 6e–2(b)(15) and 6e–3(T)(b)(15).

9. Consistent with the Commission's authority under Section 6(c) of the 1940 Act to grant exemptive orders to a class or classes of persons and transactions, this Application requests relief for the class consisting of insurers and Separate Accounts that will invest in the Portfolios, and to the extent necessary, Qualified Plans, other eligible holders of shares and investment advisers, principal underwriters and depositors of such accounts.

10. Section 9(a)(3) of the 1940 Act provides that it is unlawful for any company to serve as investment adviser or principal underwriter of any registered open-end investment company if an affiliated person of that company is subject to a disqualification enumerated in Sections 9(a)(1) or (2). Rules 6e–2(b)(15)(i) and (ii) and Rules 6e–3(T)(b)(15)(i) and (ii) under the 1940 Act provide exemptions from Section 9(a) under certain circumstances, subject to the limitations discussed above on mixed and shared funding. These exemptions limit the application of the eligibility restrictions to affiliated individuals or companies that directly participate in management of the underlying management company.

11. The partial relief granted in Rules 6e–2(b)(15) and 6e–3(T)(b)(15) under the 1940 Act from the requirements of Section 9 of the 1940 Act, in effect, limits the amount of monitoring necessary to ensure compliance with Section 9 to that which is appropriate in light of the policy and purposes of Section 9. Those 1940 Act rules recognize that it is not necessary for the protection of investors or the purposes fairly intended by the policy and provisions of the 1940 Act to apply the provisions of Section 9(a) to individuals in a large insurance company complex, most of whom will have no involvement in matters pertaining to investment companies in that organization. The Participating Insurance Companies and Qualified Plans are not expected to play any role in the management of the Funds. Those individuals who participate in the management of the Funds will remain the same regardless of which Separate Accounts or Qualified Plans invests in the Funds. Applying the monitoring requirements of Section 9(a) of the 1940 Act because of investment by separate accounts of other insurers or Qualified Plans would be unjustified and would not serve any regulatory purpose. Furthermore, the increased monitoring costs could reduce the net rates of return realized by contract owners.

12. Moreover, since the Qualified Plans, DFA and General Accounts are not themselves investment companies, and therefore are not subject to Section 9 of the 1940 Act and will not be deemed affiliates solely by virtue of their shareholdings, no additional relief is necessary.

13. Rules 6e–2(b)(15)(iii) and 6e–3(T)(b)(15)(iii) under the 1940 Act provide exemptions from the pass-through voting requirement with respect to several significant matters, assuming the limitations on mixed and shared funding are observed. Rules 6e–2(b)(15)(iii)(A) and 6e–3(T)(b)(15)(iii)(A) provide that the insurance company may disregard the voting instructions of its contract owners with respect to the investments of an underlying fund, or any contract between such a fund and its investment adviser, when required to do so by an insurance regulatory authority (subject to the provisions of paragraphs (b)(5)(i) and (b)(7)(ii)(A) of Rules 6e–2 and 6e–3(T), respectively, under the 1940 Act). Rules 6e–2(b)(15)(iii)(B) and 6e–3 (T)(b)(15)(iii)(A)(*2*) provide that the insurance company may disregard the voting instructions of its contract owners if the contract owners initiate any change in an underlying fund's investment policies, principal underwriter, or any investment adviser (provided that disregarding such voting instructions is reasonable and subject to the other provisions of paragraphs (b)(5)(ii), (b)(7)(ii)(B), and (b)(7)(ii)(C), respectively, of Rules 6e–2 and 6e–3(T) under the 1940 Act).

14. Rule 6e–2 under the 1940 Act recognizes that a variable life insurance contract, as an insurance contract, has important elements unique to insurance contracts and is subject to extensive

state regulation of insurance. In adopting Rule 6e–2(b)(15)(iii), the Commission expressly recognized that state insurance regulators have authority, pursuant to state insurance laws or regulations, to disapprove or require changes in investment policies, investment advisers, or principal underwriters. The Commission also expressly recognized that state insurance regulators have authority to require an insurer to draw from its general account to cover costs imposed upon the insurer by a change approved by contract owners over the insurer's objection. The Commission, therefore, deemed such exemptions necessary ''to assure the solvency of the life insurer and performance of its contractual obligations by enabling an insurance regulatory authority or the life insurer to act when certain proposals reasonably could be expected to increase the risks undertaken by the life insurer.'' In this respect, Applicants state, flexible premium variable life insurance contracts are identical to scheduled premium variable life insurance contracts. Therefore, the corresponding provisions of Rule 6e–3(T) under the 1940 Act undoubtedly were adopted in recognition of the same factors.

15. Applicants state that the sale of Portfolio shares to Qualified Plans, DFA and General Accounts will not have any impact on the relief requested herein. With respect to the Qualified Plans, which are not registered as investment companies under the 1940 Act, there is no requirement to pass through voting rights to Qualified Plan participants. Indeed, to the contrary, applicable law expressly reserves voting rights associated with Qualified Plan assets to certain specified persons. Under Section 403(a) of the Employee Retirement Income Security Act, as amended (''ERISA''), shares of a portfolio of a fund sold to a Qualified Plan must be held by the trustees of the Qualified Plan. Section 403(a) also provides that the trustee(s) must have exclusive authority and discretion to manage and control the Qualified Plan with two exceptions: (i) when the Qualified Plan expressly provides that the trustee(s) are subject to the direction of a named fiduciary who is not a trustee, in which case the trustees are subject to proper directions made in accordance with the terms of the Qualified Plan and not contrary to ERISA, and (ii) when the authority to manage, acquire, or dispose of assets of the Qualified Plan is delegated to one or more investment managers pursuant to Section 402(c)(3) of ERISA. Unless one of the above two exceptions stated in Section 403(a) applies, Qualified Plan trustees have the exclusive authority and responsibility for voting proxies.

16. Where a named fiduciary to a Qualified Plan appoints an investment manager, the investment manager has the responsibility to vote the shares held unless the right to vote such shares is reserved to the trustees or the named fiduciary. The Qualified Plans may have their trustee(s) or other fiduciaries exercise voting rights attributable to investment securities held by the Qualified Plans in their discretion. Some of the Qualified Plans, however, may provide for the trustee(s), an investment adviser (or advisers), or another named fiduciary to exercise voting rights in accordance with instructions from participants. Similarly, DFA and General Accounts are not subject to any pass-through voting requirements. Accordingly, unlike the case with insurance company separate accounts, the issue of resolution of material irreconcilable conflicts with respect to voting is not present with Qualified Plans, DFA or General Accounts.

17. Where a Qualified Plan does not provide participants with the right to give voting instructions, the trustee or named fiduciary has responsibility to vote the shares held by the Qualified Plan. In this circumstance, the trustee has a fiduciary duty to vote the shares in the best interest of the Qualified Plan participants. Accordingly, even if DFA or an affiliate of DFA were to serve in the capacity of trustee or named fiduciary with voting responsibilities, DFA or the affiliates would have a fiduciary duty to vote those shares in the best interest of the Qualified Plan participants.

18. In addition, even if a Qualified Plan were to hold a controlling interest in a Portfolio, Applicants do not believe that such control would disadvantage other investors in such Portfolio to any greater extent than is the case when any institutional shareholder holds a majority of the voting securities of any open-end management investment company. In this regard, Applicants submit that investment in a Portfolio by a Qualified Plan will not create any of the voting complications occasioned by mixed funding or shared funding. Unlike mixed funding or shared funding, Qualified Plan investor voting rights cannot be frustrated by veto rights of insurers or state regulators.

19. Where a Qualified Plan provides participants with the right to give voting instructions, Applicants see no reason to believe that participants in Qualified Plans generally or those in a particular Qualified Plan, either as a single group or in combination with participants in other Qualified Plans, would vote in a manner that would disadvantage Variable Contract holders. Thus, Applicants submit, the purchase of shares of Portfolios by Qualified Plans that provide voting rights does not present any complications not otherwise occasioned by mixed or shared funding.

20. The prohibitions on mixed and shared funding might reflect concern regarding possible different investment motivations among investors. When Rule 6e–2 under the 1940 Act was adopted, variable annuity separate accounts could invest in mutual funds whose shares also were offered to the general public. Therefore, the Commission staff contemplated underlying funds with public shareholders, as well as with variable life insurance separate account shareholders. The Commission staff may have been concerned with the potentially different investment motivations of public shareholders and variable life insurance contract owners. There also may have been some concern with respect to the problems of permitting a state insurance regulatory authority to affect the operations of a publicly available mutual fund and to affect the investment decisions of public shareholders.

21. For reasons unrelated to the 1940 Act, however, Internal Revenue Service Revenue Ruling 81–225 (Sept. 25, 1981) effectively deprived variable annuities funded by publicly available mutual funds of their tax-benefited status. The Tax Reform Act of 1984 codified the prohibition against the use of publicly available mutual funds as an investment vehicle for Variable Contracts (including variable life contracts). Section 817(h) of the Internal Revenue Code of 1986, as amended (the ''Code''), in effect requires that the investments made by variable annuity and variable life insurance separate accounts be ''adequately diversified'' if a separate account is organized as a UIT that invests in a single fund or series, the diversification test will be applied at the underlying fund level, rather than at the separate account level, but only if ''all of the beneficial interests'' in the underlying fund ''are held by one or more insurance companies (or affiliated companies) in their general account or in segregated asset accounts * * *''. Accordingly, a UIT separate account that invests solely in a publicly available mutual fund will not be adequately diversified. In addition, any underlying mutual fund, including any Portfolio, that sells shares to separate accounts, in effect, would be precluded from also selling its shares to

the public. Consequently, there will be no public shareholders of any Portfolio.

22. Shared funding by unaffiliated insurance companies does not present any issues that do not already exist where a single insurance company is licensed to do business in several or all states. A particular state insurance regulatory body could require action that is inconsistent with the requirements of other states in which the insurance company offers its policies. The fact that different insurers may be domiciled in different states does not create a significantly different or enlarged problem.

23. Shared funding by unaffiliated insurers, in this respect, is no different than the use of the same investment company as the funding vehicle for affiliated insurers, which Rules 6e–2(b)(15) and 6e–3(T)(b)(15) under the 1940 Act permit. Affiliated insurers may be domiciled in different states and be subject to differing state law requirements. Affiliation does not reduce the potential, if any exists, for differences in state regulatory requirements. In any event, the conditions set forth below are designed to safeguard against, and provide procedures for resolving, any adverse effects that differences among state regulatory requirements may produce. If a particular state insurance regulator's decision conflicts with the majority of other state regulators, then the affected insurer will be required to withdraw its Separate Account's investment in the affected Fund. This requirement will be provided for in agreements that will be entered into by Participating Insurance Companies with respect to their participation in the relevant Portfolio.

24. Rules 6e–2(b)(15) and 6e–3(T)(b)(15) under the 1940 Act give the insurance company the right to disregard the voting instructions of the contract owners. This right does not raise any issues different from those raised by the authority of state insurance administrators over separate accounts. Under Rules 6e–2(b)(15) and 6e–3(T)(b)(15), an insurer can disregard contract owner voting instructions only with respect to certain specified items. Affiliation does not eliminate the potential, if any exists, for divergent judgments as to the advisability or legality of a change in investment policies, principal underwriter, or investment adviser initiated by contract owners. The potential for disagreement is limited by the requirements in Rules 6e–2 and 6e–3(T) under the 1940 Act that the insurance company's disregard of voting instructions be reasonable and based on specific good-faith determinations.

25. A particular insurer's disregard of voting instructions, nevertheless, could conflict with the majority of contract owners' voting instructions. The insurer's action possibly could be different than the determination of all or some of the other insurers (including affiliated insurers) that the voting instructions of contract owners should prevail, and either could preclude a majority vote approving the change or could represent a minority view. If the insurer's judgment represents a minority position or would preclude a majority vote, then the insurer may be required, at the affected Fund's election, to withdraw its Separate Account's investment in such Portfolio. No charge or penalty will be imposed as a result of such withdrawal. This requirement will be provided for in the agreements entered into with respect to participation by the Participating Insurance Companies in each Portfolio.

26. Each Portfolio will be managed to attempt to achieve the investment objective or objectives of such Portfolio, and not to favor or disfavor any particular Participating Insurance Company or type of insurance product. There is no reason to believe that different features of various types of contracts, including the ''minimum death benefit'' guarantee under certain variable life insurance contracts, will lead to different investment policies for different types of Variable Contracts. To the extent that the degree of risk may differ as between variable annuity contracts and variable life insurance policies, the different insurance charges imposed, in effect, adjust any such differences and equalize the insurers' exposure in either case.

27. Applicants do not believe that the sale of the shares of the Portfolios to Qualified Plans will increase the potential for material irreconcilable conflicts of interest between or among different types of investors. In particular, Applicants see very little potential for such conflicts beyond those which would otherwise exist between variable annuity and variable life insurance contract owners. Moreover, in considering the appropriateness of the requested relief, Applicants have analyzed the following issues to assure themselves that there were either no conflicts of interest or that there existed the ability by the affected parties to resolve the issues without harm to the contract owners in the Separate Accounts or to the participants under the Qualified Plans.

28. Applicants considered whether there are any issues raised under the Code, regulations issued by the Treasury Department (''Regulations''), or Internal Revenue Service Revenue Rulings thereunder, if Qualified Plans, variable annuity separate accounts, and variable life insurance separate accounts all invest in the same underlying fund. As noted above, Section 817(h) of the Code imposes certain diversification standards on the underlying assets of Variable Contracts held in an underlying mutual fund. The Code provides that a Variable Contract shall not be treated as an annuity contract or life insurance, as applicable, for any period (and any subsequent period) for which the investments are not, in accordance with regulations prescribed by the Treasury Department, adequately diversified.

29. Regulations issued under Section 817(h) of the Code provide that, in order to meet the statutory diversification requirements, all of the beneficial interests in the investment company must be held by the segregated asset accounts of one or more insurance companies. However, the Regulations contain certain exceptions to this requirement, one of which allows shares in an underlying mutual fund to be held by the trustees of a qualified pension or retirement plan without adversely affecting the ability of such shares also to be held by separate accounts of insurance companies in connection with their Variable Contracts. (Treas. Reg. 1.817–5(f)(3)(iii)) Thus, the Regulations specifically permit ''qualified pension or retirement plans'' and separate accounts to invest in the same underlying fund. For this reason, Applicants have concluded that neither the Code, nor Regulations, nor Internal Revenue Service Revenue Rulings thereunder, present any inherent conflicts of interest if the Qualified Plans and Separate Accounts all invest in the same Portfolio.

30. Applicants note that while there are differences in the manner in which distributions from Variable Contracts and Qualified Plans are taxed, these differences will have no impact on the Funds. When distributions are to be made, and a Separate Account or Qualified Plan is unable to net purchase payments to make the distributions, the Separate Account and Qualified Plan will redeem shares of the relevant Portfolio at their respective net asset value in conformity with Rule 22c–1 under the 1940 Act (without the imposition of any sales charge) to provide proceeds to meet distribution needs. A Participating Insurance Company then will make distributions in accordance with the terms of its Variable Contract, and a Qualified Plan then will make distributions in

accordance with the terms of the Qualified Plan.

31. Applicants state that, there is analogous precedent for a situation in which the same funding vehicle was used for contract owners subject to different tax rules, without any apparent conflicts. Prior to the Tax Reform Act of 1984, a number of insurance companies offered variable annuity contracts on both a qualified and non-qualified basis through the same separate account. Underlying reserves of both qualified and non-qualified contracts therefore were commingled in the same separate account. However, long-term capital gains incurred in such separate accounts were taxed on a different basis than short-term gains and other income with respect to the reserves underlying non-qualified contracts. A tax reserve at the estimated tax rate was established in the separate account affecting only the non-qualified reserves. To the best of Applicants' knowledge, that practice was never found to have violated any fiduciary standards. Accordingly, Applicants have concluded that the tax consequences of distributions with respect to Participating Insurance Companies and Qualified Plans do not raise any conflicts of interest with respect to the use of the Portfolios.

32. In connection with any meeting of shareholders, the soliciting Fund will inform each shareholder, including each Separate Account, Qualified Plan, DFA and General Account, of information necessary for the meeting, including their respective share of ownership in the relevant Portfolio. Each Participating Insurance Company then will solicit voting instructions in accordance with Rules 6e–2 and 6e–3(T), as applicable, and its agreement with the Funds concerning participation in the relevant Portfolio. Shares of a Portfolio that are held by DFA and any General Account will be voted in the same proportion as all variable contract owners having voting rights with respect to that Portfolio. However, DFA and any General Account will vote their shares in such other manner as the Commission may require. Shares held by Qualified Plans will be voted in accordance with applicable law. The voting rights provided to Qualified Plans with respect to shares of a Portfolio would be no different from the voting rights that are provided to Qualified Plans with respect to shares of funds sold to the general public. Furthermore, if a material irreconcilable conflict arises because of a Qualified Plan's decision to disregard Qualified Plan participant voting instructions, if applicable, and that decision represents a minority position or would preclude a majority vote, the Qualified Plan may be required, at the election of the affected Fund, to withdraw its investment in such Portfolio, and no charge or penalty will be imposed as a result of such withdrawal.

33. Applicants reviewed whether a ''senior security,'' as such term is defined under Section 18(g) of the 1940 Act, is created with respect to any Variable Contract owner as opposed to a participant under a Qualified Plan, DFA or a General Account. Applicants concluded that the ability of the Funds to sell shares of their Portfolios directly to Qualified Plans, DFA or a General Account does not create a senior security. ''Senior security'' is defined under Section 18(g) of the 1940 Act to include ''any stock of a class having priority over any other class as to distribution of assets or payment of dividends.'' As noted above, regardless of the rights and benefits of participants under Qualified Plans, or contract owners under Variable Contracts, the Qualified Plans, DFA, General Accounts and the Separate Accounts only have rights with respect to their respective shares of the Portfolio. They only can redeem such shares at net asset value. No shareholder of a Portfolio has any preference over any other shareholder with respect to distribution of assets or payment of dividends.

Applicants' Conditions

Applicants agree that the order granting the requested relief shall be subject to the following conditions:

1. A majority of the Board of Directors (the ''Board'') of the Fund will consist of persons who are not ''interested persons'' of the Fund, as defined by Section 2(a)(19) of the 1940 Act, and the rules thereunder, and as modified by any applicable orders of the Commission, except that if this condition is not met by reason of the death, disqualification, or bona-fide resignation of any Director or Directors, then the operation of this condition will be suspended: (i) for a period of 45 days if the vacancy or vacancies may be filled by the Board; (ii) for a period of 60 days if a vote of shareholders is required to fill the vacancy or vacancies; or (iii) for such longer period as the Commission may prescribe by order upon application.

2. The Board will monitor the Fund for the existence of any material irreconcilable conflict between the interests of the contract owners of all Separate Accounts and participants of all Qualified Plans investing in such Fund, and determine what action, if any should be taken in response to such conflicts. A material irreconcilable conflict may arise for a variety of reasons, including: (i) an action by any state insurance regulatory authority; (ii) a change in applicable federal or state insurance tax, or securities laws or regulations, or a public ruling, private letter ruling, no-action or interpretative letter, or any similar action by insurance, tax, or securities regulatory authorities; (iii) an administrative or judicial decision in any relevant proceeding; (iv) the manner in which the investments of such Fund are being managed; (v) a difference in voting instructions given by variable annuity contract owners, variable life insurance contract owners, and trustees of the Qualified Plans; (vi) a decision by a Participating Insurance Company to disregard the voting instructions of contract owners; or (vii) if applicable, a decision by a Qualified Plan to disregard the voting instructions of Qualified Plan participants.

3. Participating Insurance Companies (on their own behalf, as well as by virtue of any investment of general account assets in a Portfolio), DFA, and any Qualified Plan that executes a participation agreement upon becoming an owner of 10 percent or more of the assets of any Portfolio (collectively, ''Participants'') will report any potential or existing conflicts to the Board. Participants will be responsible for assisting the Board in carrying out the Board's responsibilities under these conditions by providing the Board with all information reasonably necessary for the Board to consider any issues raised. This responsibility includes, but is not limited to, an obligation by each Participating Insurance Company to inform the Board whenever contract owner voting instructions are disregarded, and, if pass-through voting is applicable, an obligation by each Qualified Plan to inform the Board whenever it has determined to disregard Qualified Plan participant voting instructions. The responsibility to report such information and conflicts, and to assist the Board, will be a contractual obligation of all Participating Insurance Companies under their participation agreements with the Fund, and these responsibilities will be carried out with a view only to the interests of the contract owners. The responsibility to report such information and conflicts, and to assist the Board, also will be contractual obligations of all Qualified Plans with participation agreements, and such agreements will provide that these responsibilities will be carried out with a view only to the interests of Qualified Plan participants.

4. If it is determined by a majority of the Board, or a majority of the

disinterested Directors of the Board, that a material irreconcilable conflict exists, then the relevant Participant will, at its expense and to the extent reasonably practicable (as determined by a majority of the disinterested Directors), take whatever steps are necessary to remedy or eliminate the material irreconcilable conflict, up to and including: (i) Withdrawing the assets allocable to some or all of the Separate Accounts from the relevant Portfolio and reinvesting such assets in a different investment vehicle including another Portfolio, or in the case of Participating Insurance Company Participants submitting the question as to whether such segregation should be implemented to a vote of all affected contract owners and, as appropriate, segregating the assets of any appropriate group (*i.e.,* annuity contract owners or life insurance contract owners of one or more Participating Insurance Companies) that votes in favor of such segregation, or offering to the affected contract owners the option of making such a change; and (ii) establishing a new registered management investment company or managed separate account. If a material irreconcilable conflict arises because of a decision by a Participating Insurance Company to disregard contract owner voting instructions, and that decision represents a minority position or would preclude a majority vote, then the insurer may be required, at the election of the Fund, to withdraw such insurer's Separate Account's investment in the Fund, and no charge or penalty will be imposed as a result of such withdrawal. If a material irreconcilable conflict arises because of a Qualified Plan's decision to disregard Qualified Plan participant voting instructions, if applicable, and that decision represents a minority position or would preclude a majority vote, the Qualified Plan may be required, at the election of the Fund, to withdraw its investment in the Fund, and no charge or penalty will be imposed as a result of such withdrawal. The responsibility to take remedial action in the event of a Board determination of a material irreconcilable conflict and to bear the cost of such remedial action will be a contractual obligation of all Participants under their agreements governing participation in the Fund, and these responsibilities will be carried out with a view only to the interests of contract owners and Qualified Plan participants.

For purposes of this Condition 4, a majority of the disinterested members of the Board will determine whether or not any proposed action adequately remedies any material irreconcilable conflict, but, in no event will the Fund, DFA or an affiliate of DFA, as relevant, be required to establish a new funding vehicle for any Variable Contract. No Participating Insurance Company will be required by this Condition 4 to establish a new funding vehicle for any Variable Contract if any offer to do so has been declined by vote of a majority of the contract owners materially and adversely affected by the material irreconcilable conflict. Further, no Qualified Plan will be required by this Condition 4 to establish a new funding vehicle for the Qualified Plan if: (i) A majority of the Qualified Plan participants materially and adversely affected by the irreconcilable material conflict vote to decline such offer, or (ii) pursuant to documents governing the Qualified Plan, the Qualified Plan makes such decision without a Qualified Plan participant vote.

5. The Board's determination of the existence of a material irreconcilable conflict and its implications will be made known in writing promptly to all Participants.

6. As to Variable Contracts issued by Separate Accounts registered under the 1940 Act, Participating Insurance Companies will provide pass-through voting privileges to all Variable Contract owners as required by the 1940 Act as interpreted by the Commission. However, as to Variable Contracts issued by unregistered Separate Accounts, pass-through voting privileges will be extended to contract owners to the extent granted by the issuing insurance company. Accordingly, such Participants, where applicable, will vote shares of the applicable Portfolio held in their Separate Accounts in a manner consistent with voting instructions timely received from Variable Contract owners. Participating Insurance Companies will be responsible for assuring that each Separate Account investing in a Portfolio calculates voting privileges in a manner consistent with other Participants.

The obligation to calculate voting privileges as provided in this Application will be a contractual obligation of all Participating Insurance Companies under their agreement with the Funds governing participation in a Portfolio. Each Participating Insurance Company will vote shares for which it has not received timely voting instructions, as well as shares it owns through its Separate Accounts, in the same proportion as it votes those shares for which it has received voting instructions. Each Qualified Plan will vote as required by applicable law and governing Qualified Plan documents.

7. As long as the 1940 Act requires pass-through voting privileges to be provided to variable contract owners, DFA or any of its affiliates, and any General Account will vote its shares of any Portfolio in the same proportion of all variable contract owners having voting rights with respect to that Portfolio; provided, however, that DFA, any of its affiliates or any insurance company General Account shall vote its shares in such other manner as may be required by the Commission or its staff.

8. The Fund will comply with all provisions of the 1940 Act requiring voting by shareholders, which for these purposes, shall be the persons having a voting interest in the shares of the respective Portfolio, and, in particular, the Fund will either provide for annual meetings (except to the extent that the Commission may interpret Section 16 of the 1940 Act not to require such meetings) or comply with Section 16(c) of the 1940 Act (although the Fund is not one of the funds of the type described in Section 16(c) of the 1940 Act), as well as with Section 16(a) of the 1940 Act and, if and when applicable, Section 16(b) of the 1940 Act. Further, the Fund will act in accordance with the Commission's interpretation of the requirements of Section 16(a) of the 1940 Act with respect to periodic elections of trustees and with whatever rules the Commission may promulgate with respect thereto.

9. The Fund will notify all Participants that Separate Account prospectus disclosure or Qualified Plan prospectuses or other Qualified Plan disclosure documents regarding potential risks of mixed and shared funding may be appropriate. The Fund will disclose in its prospectus that (i) shares of the Fund may be offered to Separate Accounts of Variable Contracts and, if applicable, to Qualified Plans; (ii) due to differences in tax treatment and other considerations, the interests of various contract owners participating in the Fund and the interests of Qualified Plans investing in the Fund, if applicable, may conflict; and (iii) the Fund's Board will monitor events in order to identify the existence of any material irreconcilable conflicts and to determine what action, if any, should be taken in response to any such conflict.

10. If and to the extent that Rule 6e–2 and Rule 6e–3(T) under the 1940 Act are amended, or proposed Rule 6e–3 under the 1940 Act is adopted, to provide exemptive relief from any provision of the 1940 Act, or the rules promulgated thereunder, with respect to mixed or shared funding, on terms and

conditions materially different from any exemptions granted in the order requested in this Application, then the Fund and/or Participating Insurance Companies, as appropriate, shall take such steps as may be necessary to comply with Rules 6e–2 and 6e–3(T), or Rule 6e–3, as such rules are applicable.

11. The Participants, at least annually, will submit to the Board such reports, materials, or data as a Board reasonably may request so that the trustees of the Board may fully carry out the obligations imposed upon the Board by the conditions contained in this Application. Such reports, materials, and data will be submitted more frequently if deemed appropriate by the Board. The obligations of the Participants to provide these reports, materials, and data to the Board, when it so reasonably requests, will be a contractual obligation of all Participants under their agreements governing participation in the Portfolios.

12. All reports of potential or existing conflicts received by the Board, and all Board action with regard to determining the existence of a conflict, notifying Participants of a conflict, and determining whether any proposed action adequately remedies a conflict, will be properly recorded in the minutes of the Board or other appropriate records, and such minutes or other records shall be made available to the Commission upon request.

13. The Fund will not accept a purchase order from a Qualified Plan if such purchase would make the Qualified Plan shareholder an owner of 10 percent or more of the assets of such Portfolio unless such Qualified Plan executes an agreement with the Fund governing participation in such Portfolio that includes the conditions set forth herein to the extent applicable. A Qualified Plan or Qualified Plan participant will execute an application containing an acknowledgment of this condition at the time of its initial purchase of shares of any Portfolio.

For the Commission, by the Division of Investment Management, pursuant to delegated authority.

Margaret H. McFarland,

Deputy Secretary.

[FR Doc. 02–4053 Filed 2–19–02; 8:45 am]

BILLING CODE 8010–01–P

SECURITIES AND EXCHANGE COMMISSION

Eagle Building Technologies, Inc. File No. 500–1; Order of Suspension of Trading

February 15, 2002.

It appears to the Securities and Exchange Commission that there is a lack of current and accurate information concerning the securities of Eagle Building Technologies, Inc. (''Eagle Building''), because of questions regarding the accuracy of assertions by Eagle Building, and by others, in documents sent to and statements made to market makers of the stock of Eagle Building, other broker-dealers, and investors concerning, among other things: (1) The company's foreign operations and (2) post-September 11 security measures marketed by Eagle Building, including an airport baggage security system, mail sterilization technology, and money laundering detection software.

The Commission is of the opinion that the public interest and the protection of investors require a suspension of trading in the securities of the above-listed company.

Therefore, it is ordered, pursuant to Section 12(k) of the Securities Exchange Act of 1934, that trading in the above-listed company is suspended for the period from 9:30 a.m. EST, February 15, 2002, through 11:59 p.m. EST, on March 1, 2002.

By the Commission.

Jonathan G. Katz,

Secretary.

[FR Doc. 02–4146 Filed 2–15–02; 4:08 pm]

BILLING CODE 8010–01–M

SECURITIES AND EXCHANGE COMMISSION

[Release No. 34–45430; File No. SR–DTC–2002–01]

Self-Regulatory Organizations; The Depository Trust Company; Notice of Filing and Immediate Effectiveness of Proposed Rule Change Relating to Dutch Issues in the Direct Registration System and to a Modification to the Surety Bond That is Part of the Direct Registration System

February 11, 2002.

Pursuant to section 19(b)(1) of the Securities Exchange Act of 1934 (''Act''),[1] notice is hereby given that on January 18, 2002, The Depository Trust Company (''DTC'') filed with the Securities and Exchange Commission (''Commission'') the proposed rule change as described in Items I, II, and III below, which items have been prepared primarily by DTC. The Commission is publishing this notice to solicit comments on the proposed rule change from interested parties.

I. Self-Regulatory Organization's Statement of the Terms of Substance of the Proposed Rule Change

The proposed rule change provides (i) an interpretation of a rule relating to Dutch issues in the Profile Modification System (''Profile'') feature of the Direct Registration System (''DRS'') facility and (ii) increases the limits of the surety bond that is part of the Profile Surety Program (''PSP'').[2]

II. Self-Regulatory Organization's Statement of the Purpose of, and Statutory Basis for, the Proposed Rule Change

In its filing with the Commission, DTC included statements concerning the purpose of and basis for the proposed rule change and discussed any comments it received on the proposed rule change. The text of these statements may be examined at the places specified in Item IV below. DTC has prepared summaries, set forth in sections (A), (B) and (C) below, of the most significant aspects of these statements.[3]

(A) Self-Regulatory Organization's Statement of the Purpose of, and Statutory Basis for, the Proposed Rule Change

The purpose of the proposed rule change is to (i) provide an interpretation with respect to Dutch issues in DRS and (ii) increase the limits of the surety bond that is part of PSP.

(1) Dutch Issues

DTC established a deadline of December 14, 2001, as the date by which all securities issues eligible for DRS would have to be eligible for processing through Profile.[4] Counsel for a transfer agent for securities of certain Dutch issuers has informed DTC, however, that in order for a transfer of registration of Dutch securities to be

[1] 15 U.S.C. 78s(b)(1).

[2] For a description of DRS, including Profile and PSP, refer to Securities Exchange Act Release Nos. 35038 (December 1, 1994), 59 FR 63652; 37931 (November 7, 1996), 61 FR 58600; 41862 (September 10, 1999), 64 FR 51162; 42366 (January 28, 2000), 65 FR 5714; 42704 (April 19, 2000), 65 FR 24242; 43586 (November 17, 2000), 65 FR 70745; 44696 (August 14, 2001), 66 FR 43939; and 45232 (January 3, 2002), 67 FR 1254.

[3] The Commission has modified the text of the summaries prepared by DTC.

[4] See Securities Exchange Act Release Nos. 44696 (August 14, 2001), 66 FR 43939 [File No. SR–DTC–2001–07] and 45232 (January 3, 2002), 67 FR 1254 (File No. SR–DTC–2001–18).

effected under Dutch law, a deed (*i.e.,* a stock power) signed by the transferor must be presented to or on behalf of and acknowledged by or on behalf of the Dutch issuer. DTC has been informed that this requirement could be satisfied by the following mechanism that DTC proposes to adopt for Dutch issues eligible for DRS.

In order to ensure Dutch law is complied with, the transfer agent would put a flag on each account of a registered holder of a DRS position in a Dutch issue. Such registered holders would be sent a ''Notice'' describing Profile and informing them that in order to avail themselves of Profile and have any future transfer of the Dutch securities under Profile be in compliance with Dutch law, such registered holders would be required to complete and deliver to the transfer agent a signed deed in the form provided by the transfer agent. At such time as the transfer agent receives a properly executed deed from a holder, the flag will be removed from the holder's account. If a Profile transaction or any other attempted movement of a position through DRS is proposed on a flagged account, it will be rejected until the deed has been properly received.

For the two Dutch issues currently in DRS, the Notice would initially be mailed to affected holders by January 15, 2002. A follow-up reminder Notice would be mailed to such holders by February 20, 2002. The last day for such holders to submit their deeds to the issuer would be March 29, 2002. Any such holders that have not submitted a deed by March 29, 2002, would be certificated beginning on April 1, 2002. After January 15, 2002, and continuing in the future, any new holders of a DRS position in a Dutch issue would have seventy-five days from the date such position is created to deliver a deed. If a deed is not received within seventy-five days, the position would be certificated.

Such a procedure will serve to facilitate the movement of Dutch issuers' securities issues that are already in DRS into Profile and should help ensure that holders of DRS positions are kept in DRS. For any new Dutch issues going into DRS, registered holders of DRS positions will have seventy-five days from the time of becoming a DRS holder to submit a deed or else have their position certificated. DTC interprets its current rules relating to the administration of the DRS facility and Profile as being satisfied by the above-described mechanism.

(2) PSP Surety Bond

In a previous rule filing with the Commission, DTC set forth certain requirements for the surety bond to be issued in connection with PSP.[5] One characteristic of the surety bond was that it was required to have a limit of $2 million per occurrence with an aggregate limit of $6 million. The surety bond is now required to have a limit of $3 million per occurrence. The required aggregate limit remains $6 million. DTC is not aware of any increases in price that will accrue to subscribers of the surety bond at this point in time.

The proposed rule change is consistent with the requirements section 17A of the Act and the rules and regulations thereunder applicable to DTC because it clarifies DTC's interpretation of its rule thereby eliminating confusion in the industry relating to the implementation of the Profile feature, providing for more expeditious implementation of Profile, and strengthening a risk management feature of Profile. The proposed rule change will be implemented consistently with the safeguarding of securities and funds in DTC's custody or control or for which it is responsible because the operation of DRS, as modified by the proposed rule change, will be similar to the current operation of DRS.

(B) Self-Regulatory Organization's Statement on Burden on Competition

DTC perceives no adverse impact on competition by reason of the proposed rule change.

(C) Self-Regulatory Organization's Statement on Comments on the Proposed Rule Change Received from Members, Participants or Others

Written comments from DTC participants or others have not been solicited or received on the proposed rule change.

III. Date of Effectiveness of the Proposed Rule Change and Timing for Commission Action

The foregoing rule change has become effective pursuant to section 19(b)(3)(A)(i)[6] of the Act and Rule 19b–4(f)(1)[7] promulgated thereunder because the proposal constitutes a stated interpretation with respect to the meaning, administration, or enforcement of an existing rule. At any time within sixty days of the filing of such proposed rule change, the Commission may summarily abrogate such rule change if it appears to the Commission that such action is necessary or appropriate in the public interest, for the protection of investors, or otherwise in furtherance of the purposes of the Act.

IV. Solicitation of Comments

Interested persons are invited to submit written data, views, and arguments concerning the foregoing, including whether the proposed rule change is consistent with the Act. Persons making written submissions should file six copies thereof with the Secretary, Securities and Exchange Commission, 450 Fifth Street, NW, Washington, DC 20549–0609. Copies of the submission, all subsequent amendments, all written statements with respect to the proposed rule change that are filed with the Commission, and all written communications relating to the proposed rule change between the Commission and any person, other than those that may be withheld from the public in accordance with the provisions of 5 U.S.C. 552, will be available for inspection and copying in the Commission's Public Reference Section, 450 Fifth Street, NW, Washington, DC 20549. Copies of such filing also will be available for inspection and copying at the principal office of DTC. All submissions should refer to File No. SR–DTC–2002–01 and should be submitted by March 13, 2002.

For the Commission by the Division of Market Regulation, pursuant to delegated authority.[8]

Margaret H. McFarland,

Deputy Secretary.

[FR Doc. 02–4014 Filed 2–19–02; 8:45 am]

BILLING CODE 8010–01–P

[5] Securities Exchange Act Release No. 43586 (November 17, 2000), 65 FR 70745 (File No. SR–DTC–00–09).

[6] 15 U.S.C. 78s(b)(3)(A)(i).

[7] 17 CFR 240.19b–4(f)(1).

[8] 17 CFR 200.30–3(a)(12).

SECURITIES AND EXCHANGE COMMISSION

[Release No. 34–45436; File No. SR–Phlx–2001–24]

Self-Regulatory Organizations; Notice of Filing of Proposed Rule Change and Amendments Nos. 1, 2, 3, and 4 Thereto by the Philadelphia Stock Exchange, Inc. Relating to the Manual Handling of Certain AUTOM Orders by Specialists

February 12, 2002.

Pursuant to section 19(b)(1) of the Securities Exchange Act of 1934

(''Act'')[1] and Rule 19b–4 thereunder,[2] notice is hereby given that on March 2, 2001, the Philadelphia Stock Exchange, Inc. (''Phlx'' or ''Exchange'') filed with the Securities and Exchange Commission (''SEC'' or ''Commission'') the proposed rule change as described in Items I, II, and III below, which Items have been prepared by the Phlx. On April 13, 2001, the Phlx submitted Amendment No. 1 to the proposed rule change.[3] On July 3, 2001, the Phlx submitted Amendment No. 2 to the proposed rule change.[4] On August 8, 2001, the Phlx submitted Amendment No. 3 to the proposed rule change.[5] On December 11, 2001, the Phlx submitted Amendment No. 4 to the proposed rule change.[6] The Commission is publishing this notice to solicit comments on the proposed rule change, as amended, from interested persons.

I. Self-Regulatory Organization's Statement of the Terms of Substance of the Proposed Rule Change

The Phlx proposes to adopt Phlx Rule 1080(c)(iv) to codify that an options order otherwise eligible for the Exchange's Automated Execution System (''AUT–X'') will instead be manually handled by the specialist in certain circumstances. Specifically, an options order entered through the Exchange's Automated Options Market (''AUTOM'') System,[7] that is otherwise eligible for AUTO–X, may instead be handled manually by the specialist. Below is the text of the proposed rule change. Additions are *italicized*.

Rule 1080. Philadelphia Stock Exchange Automated Options Market (AUTOM) and Automatic Execution System (AUTO–X)

(a)–(b) No change.

(c) AUTO–X—AUTO–X is a feature of AUTOM that automatically executes *eligible* public customer market and marketable limit orders up to the number of contracts permitted by the Exchange for certain strike prices and expiration months in equity options and index options, unless the Options Committee determines otherwise. AUTO–X automatically executes eligible orders using the Exchange disseminated quotation *(except if executed pursuant to the NBBO Feature in sub-paragraph (i) below)* and then automatically routes execution reports to the originating member organization. AUTOM orders not eligible for AUTO–X are executed manually in accordance with Exchange rules. Manual execution may also occur when AUTO–X is not *engaged, such as pursuant to sub-paragraph (iv) below.* An order may also be executed partially by AUTO–X and partially manually.

The Options Committee may for any period restrict the use of AUTO–X on the Exchange in any option or series. Currently, orders up to 100 contracts, subject to the approval of the Options Committee, are eligible for AUTO–X.

The Options Committee may, in its discretion, increase the size of orders in one or more classes of multiply-traded equity options eligible for AUTO–X to the extent necessary to match the size of orders in the same options eligible for entry into the automated execution system of any other options exchange, provided that the effectiveness of any such increase shall be conditioned upon its having been filed with the Securities and Exchange Commission pursuant to section 19(b)(3)(A) of the Securities Exchange Act of 1934.

(i) AUTO–X on the NBBO (NBBO Feature). AUTO–X on the NBBO (the ''NBBO Feature'') is a feature of AUTOM that automatically executes at the National Best Bid or Offer (''NBBO''). NBBO Feature will execute AUTO–X eligible orders at the NBBO for certain options designated by the Options Committee as eligible for the NBBO Feature (''automatic step-up options''), provided that the NBBO does not differ from the specialist's best bid or offer by more than the ''step up parameter.''

(A)–(C) No change.

(D)–(E) Reserved.

(ii) No change.

(iii) Reserved.

(iv) Except as otherwise provided in this Rule, in the following circumstances, an order otherwise eligible for AUTO–X will instead be manually handled by the specialist:

(A) the Exchange's disseminated market is crossed (i.e., 2–1/8 bid, 2 offer) or locked (i.e., 2 bid, 2 offer), or crosses or locks the disseminated market of another options exchange;

(B) one of the following order types: stop, stop limit, market on closing, market on opening, or an all-or-none order where the full size of the order cannot be executed;

(C) the AUTOM System is not open for trading when the order is received (which is known as a pre-market order);

(D) the disseminated market is produced during an opening or other rotation;

(E) when the specialist posts a bid or offer that is better than the specialist's own bid or offer;

(F) if the NBBO Feature, described in paragraph (c)(i) above, is not engaged, and the Exchange's bid or offer is not the NBBO;

(G) when the price of a limit order is not in the appropriate minimum trading increment pursuant to Rule 1034;

(H) when the bid price is zero respecting sell orders; and

(I) when the number of contracts automatically executed within a 15 second period in an option (subject to a pilot program until May 30, 2002) exceeds the AUTO–X guarantee, a 30 second period ensues during which subsequent orders are handled manually.

(d)–(j) No Change.

Commentary: No change.

II. Self-Regulatory Organization's Statement of the Purpose of, and Statutory Basis for, the Proposed Rule Change

In its filing with the Commission, the Phlx included statements concerning the purpose of, and basis for, the proposed rule change and discussed any comments it received on the proposed rule change. The text of these statements may be examined at the places specified in Item IV below. The Phlx has prepared summaries, set forth in sections A, B, and C below, of the most significant aspects of such statements.

[1] 15 U.S.C. 78s(b)(1).

[2] 17 CFR 240.19b–4.

[3] *See* Letter from Richard S. Rudolph, Counsel, Phlx, to Nancy J. Sanow, Assistant Director, Division of Market Regulation (''Division''), Commission, dated April 12, 2001 (''Amendment No. 1''). Amendment No. 1 designates the proposed rule change as filed pursuant section 19(b)(2) of the Act, and the Exchange requests that the proposed rule change is given accelerated effectiveness. 15 U.S.C. 78s(b)(2).

[4] *See* Letter from Richard S. Rudolph, Counsel, Phlx, to Nancy J. Sanow, Assistant Director, Division, Commission, dated July 2, 2001 (''Amendment No. 2''). Amendment No. 2 corrects technical errors to the proposed rule text.

[5] *See* Letter from Richard S. Rudolph, Counsel, Phlx, to Nancy J. Sanow, Assistant Director, Division, Commission, dated August 7, 2001 (''Amendment No. 3''). Amendment No. 3 updates the proposed rule text that refers to a pilot program that permits the Exchange to automatically execute option contracts within a 15 second period. In addition, Amendment No. 3 corrects technical errors to the proposed rule text.

[6] *See* Letter from Richard S. Rudolph, Counsel, Phlx, to Nancy J. Sanow, Assistant Director, Division, Commission, dated December 10, 2001 (''Amendment No. 4''). Amendment No. 4 replaces the original filing in its entirety and modifies earlier revisions by: (1) Discussing the calculation of a zero bid by the Exchange's Autoquote System; (2) discussing the Exchange's audit trail and other documentation in cases which AUTO–X is disengaged; (3) discussing the authority of the Exchange's Options Committee to restrict the use of AUTO–X on the Exchange; and (4) updating the proposed rule text that refers to the pilot program that permits the Exchange to automatically execute option contracts within a 15 second period.

[7] AUTOM is the Phlx's automated order routing, delivery, execution, and reporting system for options.

A. Self-Regulatory Organization's Statement of the Purpose of, and Statutory Basis for, the Proposed Rule Change

1. Purpose

The purpose of the proposed rule change is to codify the situations in which an otherwise eligible AUTO–X order is handled manually by the specialist. The Phlx believes that the proposal also clarifies that the manual handling of such orders reflects the normal operation of AUTOM and AUTO–X.[8] Currently, Phlx Rule 1080, ''Philadelphia Stock Exchange Automated Options Market (AUTOM) and Automated Execution System (AUTO–X),'' governs the operation of AUTOM. AUTO–X is addressed primarily in paragraph (c) of the rule. Phlx Rule 1080(c) provides that only certain order types are eligible for AUTO–X. Specifically, Rule 1080(c) currently provides that AUTO–X is a feature of AUTOM that automatically executes public customer market and marketable limit orders up to the number of contracts permitted by the Exchange for certain strike prices and expiration months in equity options and index options, unless the Options Committee determines otherwise.

According to the Phlx, AUTO–X automatically executes eligible orders using the Exchange disseminated quotation and then automatically routes execution reports to the originating member organization.[9] In all other circumstances, AUTOM orders that are not eligible for AUTO–X would be executed manually in accordance with Exchange rules.

According to the Exchange, Phlx Rule 1080 currently enumerates some of the situations where an order may not be automatically executed. For example, manual execution may occur when AUTO–X is not engaged.[10] In addition, Rule 1080(c) also currently states that an order may be executed partially by AUTO–X and partially handled manually by the specialist.

The Phlx is proposing to codify nine additional situations in which an order would not automatically execute. First, if the Exchange's disseminated market is crossed (*i.e.,* 2⅛ bid, 2 offer) or locked (*i.e.,* 2 bid, 2 offer), there is no valid market, such that no automatic execution would occur.[11] If the Exchange's disseminated market crosses or locks the disseminated market of another options exchange, an incoming AUTOM order would not automatically execute in order to prevent a trade-through from occurring.

Second, the following order types do not automatically execute: stop, stop limit, market on closing, and market on opening, because these orders consist of contingencies, such as pricing (stop at a certain price) or timing (execute only on the opening) that the AUTOM System cannot address.[12] Similarly, an all-or-none order where the full size of the order cannot be executed is not eligible for AUTO–X because such an order has no standing and is thus inconsistent with automated handling.[13]

Third, AUTOM orders received when the AUTOM System is not open for trading (known as pre-market orders) are not eligible for automatic execution because they are entitled to the opening price.[14] The Phlx also notes that openings are handled manually, with AUTO–X engaged promptly following an option's opening,[15] once there is an established price against which an automatic execution can occur.[16]

Fourth, when the disseminated market is produced during an opening or other rotation, an incoming order is not automatically executed, similar to pre-market orders, because there must be an established price against which an automatic execution can occur.

Fifth, an incoming AUTOM order will not automatically execute when the specialist posts a bid or offer that is better than the specialist's own bid or offer. The bid or offer could represent a customer order or a price-improving bid or offer by a Registered Options Trader (''ROT''). Currently, these can be displayed manually by the specialist using a certain indicator, which causes AUTO–X (and its trade allocation feature, the Wheel)[17] to not engage. Thus, any incoming order would be manually handled by the specialist in lieu of automatic execution.[18]

Sixth, certain options are subject to the NBBO Feature, described in Phlx Rule 1080(c)(i), which automatically executes eligible orders at the National Best Bid or Offer (''NBBO'') provided that the NBBO does not differ from the specialist's best bid or offer by more than the ''step-up parameter,'' which is determined by the Options Committee. According to the Phlx, participation on an option-by-option basis in the NBBO Feature is voluntary, such that if the specialist elects not to engage the NBBO Feature, or disengages it pursuant to the Exchange rule, and the Exchange's disseminated bid or offer is inferior to the NBBO, an incoming AUTOM order would not automatically execute. Thus, in order to prevent AUTO–X from creating a trade-through, such an order would be handled manually.[19]

Seventh, when the price of an order is not expressed in the appropriate minimum trading increment pursuant to Phlx Rule 1034, the order would not be automatically executed because the price is presumed to be invalid. Nevertheless, in lieu of rejecting such an order, the order would be handled manually by the specialist, which may result in an execution at a better price and in the correct increment. For example, where the market is 2.00–2.25, an incoming buy order for 2.21 would not automatically execute; while manually handled by the specialist, it may be executed at 2.20, a better price.

Eighth, where the bid price for a particular option series is zero, an incoming AUTOM sell order would not automatically execute, because the ''zero'' price is not a valid execution price. According to the Phlx, a ''zero'' bid price is typically calculated by Auto-Quote, the Exchange's automatic pricing system, when an option that is well out-of-the-money approaches expiration, and thus has neither intrinsic value nor time value. In such circumstance, as stated above, an incoming order to sell would not be AUTO–X eligible, since an automatic execution is not possible at a ''zero'' bid.

[8] On September 11, 2000, the SEC issued an order, which required the Phlx (as well as the other options exchanges) to implement certain undertakings. One such undertaking was to adopt new, or amend existing exchange rules concerning automatic quotation and execution systems which specify the circumstances, if and, by which automated execution systems would be disengaged or operated in any manner other than the normal manner set forth in the exchange's rules; and, require the documentation of the reasons for each decision to disengage an automatic execution system or operate it in any manner other than the normal manner. *See In the Matter Certain Activities of Options Exchanges,* Securities Exchange Act Release No. 43268 (September 11, 2000). The proposed rule change codifies that such orders being handled manually by specialists in the stated circumstances is the normal operation of AUTOM and AUTO–X.

[9] The Exchange is also proposing to cross-reference Phlx Rule 1080(c)(i), ''AUTO–X on the NBBO (NBBO Feature),'' in cases in which AUTO–X will not execute at the Exchange's disseminated quotation.

[10] *See* Phlx Rule 1080(e), and Option Floor Procedure Advices A–13 and F–10.

[11] *See also* CBOE Rule 6.8(c).

[12] *See e.g.,* Option Floor Procedure Advice A–5 (''Execution of Stop and Stop Limit Orders'').

[13] *See* Option Floor Procedure Advice A–9 (''All-or-None Option Orders'').

[14] *See* Option Floor Procedure Advice A–12 (''Opening Rotations and SORT Procedures'').

[15] *See* Option Floor Procedure Advice A–13 (''Auto Execution Engagement/Disengagement Responsibility'').

[16] The Exchange believes that CBOE Rule 6.8(f) similarly provides that RAES does not operate until after the opening. *See* CBOE Rule 6.8(f).

[17] *See* Option Floor Procedure Advice F–24 (''AUTO–X Contra-Party Participation (The Wheel)'').

[18] *See also* CBOE Rule 6.8(b).

[19] *See also* CBOE Rule 6.8, Interpretations and Policies .02 for a similar provision.

Lastly, the Phlx represents that certain options are subject to a pilot program under which when the number of contracts automatically executed within a 15 second period exceeds the AUTO–X guarantee, a 30 second period ensues during which subsequent orders are handled manually.[20] The Phlx proposes to codify this program, which is discussed more fully in its adopting release, in Rule 1080(c).

In any of these situations, the Phlx would disseminate a message to its quotation vendors that indicates to users on a series-by-series basis, whether or not such series is AUTO–X eligible. Internally, the Phlx represents that it maintains an electronic audit trail, called an AUTO–X Disengagement Log, that electronically monitors and records every situation in which AUTO–X is disengaged. According to the Phlx, the AUTO–X Disengagement Log indicates whether the disengagement was done automatically by AUTOM for any of the nine aforementioned reasons, or pursuant to a request by the specialist. In the latter situation, the Phlx represents that approval of two Floor Officials is required to disengage AUTO–X. The Market Surveillance Department of the Phlx maintains a record of each such situation.

Additionally, Phlx Rule 1080 provides that the Options Committee may for any period restrict the use of AUTO–X on the Exchange in any option or series.[21] According to the Phlx, such restriction may, in some instances, affect the eligibility of certain options to be executed via AUTO–X. For example, the Options Committee has previously restricted certain options from AUTO–X eligibility due to the unusual volatility in certain series, or due to the unusually high premiums for deep in-the-money options that generally do not generate interest from public customers.[22] The Phlx represents that any restriction on the use of AUTO–X on the Exchange in any option or series approved by the Options Committee will be clearly communicated to its membership and AUTOM users through an electronic message via AUTOM, and through an Exchange information circular. The Phlx also represents that such restriction would not take effect until after such communication has been made.

2. Statutory Basis

The Phlx believes that its proposal is consistent with section 6(b) of the Act in general,[23] and furthers the objectives of section 6(b)(5) of the Act in particular,[24] in that it is designed to promote just and equitable principles of trade, remove impediments to and perfect the mechanism of a free and open market and protect investors and the public interest by causing certain AUTOM orders to be handled manually.

B. Self-Regulatory Organization's Statement on Burden on Competition

The Phlx believes that the proposed rule change does not impose any burden on competition that is not necessary or appropriate in furtherance of the purposes of the Act.

C. Self-Regulatory Organization's Statement on Comments on the Proposed Rule Change Received From Members, Participants, or Others

The Phlx has neither solicited nor received any written comments on the proposed rule change.

III. Date of Effectiveness of the Proposed Rule Change and Timing for Commission Action

Within 35 days of the publication of this notice in the **Federal Register** or within such longer period (i) as the Commission may designate up to 90 days of such date if it finds such longer period to be appropriate and publishes its reasons for so finding or (ii) as to which the Exchange consents, the Commission will:

(A) By order approve such proposed rule change or

(B) Institute proceedings to determine whether the proposed rule change should be disapproved.

IV. Solicitation of Comments

Interested persons are invited to submit written data, views and arguments concerning the foregoing, including whether the proposed rule change, as amended, is consistent with the Act. Persons making written submissions should file six copies thereof with the Secretary, Securities and Exchange Commission, 450 Fifth Street, NW, Washington, DC 20549–0609. Copies of the submission, all subsequent amendments, all written statements with respect to the proposed rule change that are filed with the Commission, and all written communications relating to the proposed rule change between the Commission and any person, other than those that may be withheld from the public in accordance with the provisions of 5 U.S.C. 552, will be available for inspection and copying in the Commission's Public Reference Room. Copies of such filing will also be available for inspection and copying at the principal office of the Phlx.

All submissions should refer to File No. SR–Phlx–2001–24 and should be submitted by March 13, 2002.

For the Commission by the Division of Market Regulation, pursuant to delegated authority.[25]

Margaret H. McFarland,

Deputy Secretary.

[FR Doc. 02–4055 Filed 2–19–02; 8:45 am]

BILLING CODE 8010–01–P

[20] *See* Securities Exchange Act Release No. 45090 (November 21, 2001), 66 FR 59834 (November 30, 2001) (SR–PHLX–2001–100).

[21] The Options Committee has supervision of all connections or means of communications with the equity and index options trading floor and may require the discontinuance of any such connection or means of communication when, in the opinion of the Committee, it is contrary to the welfare or interest of the Exchange. *See* Phlx By-Law Article X, Section 10–19. The Phlx believes that such connections and means of communication include AUTOM and AUTO–X.

[22] *See* Securities Exchange Act Release No. 36467 (November 8, 1995), 60 FR 57615 (November 16, 1995) (order approving SR–Phlx–95–33). The Commission approved the Exchange's limitation of AUTO–X eligibility for National Over-the-Counter Index (''XOC'') options to XOC series where the bid is $10 or less. The Options Committee approved this restriction due to the significantly reduced public customer demand for high priced XOC options, and to the unusually high volatility in over-the-counter markets at the time, which made it increasingly difficult for specialists and market makers to monitor quotations to reflect changes in the markets for underlying securities.

[23] 15 U.S.C. 78f(b).

[24] 15 U.S.C. 78f(b)(5).

[25] 17 CFR 200.30–3(a)(12).

SMALL BUSINESS ADMINISTRATION

Region VI Regulatory Fairness Board; Public Federal Regulatory Enforcement Fairness Roundtable

The Small Business Administration Region VI Regulatory Fairness Board and the SBA Office of the National Ombudsman, will hold a Public Roundtable on Wednesday, February 20, 2002 at 1 p.m. at the Arkansas State Chamber of Commerce /AIA, 410 South Cross Street, Little Rock, Arkansas 72201, to provide small business owners and representatives of trade associations with an opportunity to share information concerning the federal regulatory enforcement and compliance environment.

Anyone wishing to attend or to make a presentation must contact Deb Mathis in writing or by fax, in order to be put on the agenda. Deb Mathis, Arkansas State Chamber of Commerce /AIA, 410 South Cross Street, Little Rock, Arkansas 72201, Phone (501) 374–9225, fax (501) 372–2722, e-mail *Dmathis@ascc-aia.org.*

For more information see our website at *http://www.sba.gov/ombudsman/events/dsp_roundtable.html.*

Dated: February 12, 2002.

Michael L. Barrera,

National Ombudsman.

[FR Doc. 02–4010 Filed 2–19–02; 8:45 am]

BILLING CODE 8025–01–P

TENNESSEE VALLEY AUTHORITY

Environmental Impact Statement for Addition of Electric

Generation Baseload Capacity in Tennessee

AGENCY: Tennessee Valley Authority.

ACTION: Notice of intent.

SUMMARY: The Tennessee Valley Authority (TVA) is providing this notice pursuant to the Council on Environmental Quality's regulations (40 CFR 1500–1508), TVA's procedures implementing the National Environmental Policy Act, and section 106 of the National Historic Preservation Act and its implementing regulations (36 CFR part 800).

TVA will prepare an environmental impact statement (EIS) to assess the impact of a proposal made by Pickwick Power, LLC (PPLLC) to build and operate a coal-fired generating plant in Tennessee. The plant would supply intermediate or baseload capacity to the TVA electric generation system to meet growing power demands. PPLLC has proposed a site in Hardin County near Savannah, Tennessee, near the west shore of the Tennessee River at mile 203.

The following Federal actions are proposed at this time so that PPLLC can undertake the project:

• TVA's entering into a contract with PPLLC for buying electricity from the facility, interconnecting the facility with the TVA transmission system, and supplying the fuel and limestone for the facility.

• TVA's approval under section 26a of the TVA Act for PPLLC's construction of barge unloading facilities, water intakes, and discharge outfalls associated with the facility. Approvals may also have to be obtained from the U.S. Army Corps of Engineers under section 404 of the Clean Water Act and Section 10 of the Rivers and Harbors Act of 1899 for construction of the unloading facilities, water intakes, and discharge outfalls.

TVA will use the EIS process to obtain public comments on this proposal. This notice invites public comment concerning scope of the EIS, alternatives and environmental issues that should be addressed as a part of this EIS, and potential for impacts to historic properties such as archaeological resources and historic sites and structures.

DATES: Comments must be postmarked or e-mailed no later than March 21, 2002, to ensure their consideration in determining the scope of issues to be addressed and for identifying the significant issues relating to the proposed action.

ADDRESSES: Written comments and requests for further information should be sent to Peter K. Scheffler, Specialist, National Environmental Policy Act, Tennessee Valley Authority, mail stop WT 8C, 400 West Summit Hill Drive, Knoxville, Tennessee 37902–1499. Comments may be e-mailed to *pkscheffler@tva.gov.*

SUPPLEMENTARY INFORMATION:

Project Description

PPLLC has presented TVA with a proposal to supply baseload or intermediate power generated by a 100 Megawatt (MW) electric power plant. TVA would provide the fuel for the facility and pay a fee to convert the fuel to energy. PPLLC has proposed to build and operate the proposed facility at a site in Hardin County. The facility would begin generating power in 2004.

The proposed plant would consist of one coal-fired circulating fluidized bed combustion (CFBC) boiler, a steam turbine, and an electric generator. These components would be manufactured at existing facilities in China and transported to an existing shipyard in China for installation on two barges. The barges would also be manufactured, and the complete barge-mounted power generation module would be tested, in China before transport to the United States.

The barges would be loaded on a ship for dry transport to Mobile, Alabama, where they would then be placed into the water and towed up the Tennessee-Tombigbee Waterway to the proposed plant site. At the site, the barges would be removed from the Tennessee River by heavy lift, moved with the help of multi-wheeled transporters to a site probably several thousand feet west of the river, and placed on a foundation designed to fit the bottom of the barges. Final assembly would then take place, including connecting to the TVA power system.

The facility would also include other major balance-of-plant components such as barge unloading facilities, fuel handling and storage facilities, water intake and discharge structures, and electrical interconnection facilities. Barge unloading facilities would be constructed capable of unloading the facility barges (as noted above) and 1800-ton coal and limestone barges. Because the barge unloading facilities would require alteration of the shoreline and possibly dredging of the reservoir bottom, they would need approval from TVA under section 26a of the TVA Act and probably permits from the United States Army Corps of Engineers under section 10 of the Rivers and Harbors Act and section 404 of the Clean Water Act. Facilities such as conveyors would be needed to transport fuel and limestone to storage facilities and to the boiler. Areas would be identified on-site for coal and limestone storage. Facilities would also be built to store No.2 diesel that would be delivered to the boilers as fuel for standby and start-up. An ash disposal landfill of sufficient size to store ash generated from the process would be located adjacent to the facility. Section 26a approvals from TVA and sections 10 and 404 permits from the U.S. Army Corps of Engineers may also be required for process and potable water intakes and for wastewater discharge outfalls. To contain these various components, the proposed site could be as large as several hundred acres.

Background: TVA's Integrated Resource Plan and the Need for Power

This EIS will tier from TVA's *Energy Vision 2020:* An Integrated Resource Plan and Final Programmatic Environmental Impact Statement. *Energy Vision 2020* was completed in December 1995 and a Record of Decision issued on February 28, 1996 (61 FR 7572). *Energy Vision 2020* analyzed a full range of supply-side and demand-side options to meet customer energy needs for the period 1995 to 2020. These options were ranked using several criteria including environmental performance. Favorable options were formulated into strategies. A group of options drawn from several effective strategies was chosen as TVA's preferred alternative. The supply-side options selected to meet peaking and baseload capacity needs through the 2005 period included: (1) Addition of simple cycle or combined cycle combustion turbines to TVA's generation system, (2) purchase of call options for peaking or baseload capacity, and (3) market purchases of peaking or baseload capacity. The short-term action plan of *Energy Vision 2020* identified a need for 3,000 MW of baseload and peaking additions through the year 2002. This is in addition to the baseload capacity additions of the successful completion of Watts Bar Nuclear Plant Unit 1 and the return to

service of Browns Ferry Nuclear Plant Unit 3.

Each year TVA provides updated projections of supply and demand to the TVA sub-region of the Southeastern Electric Reliability Council (SERC) for the U.S. Department of Energy's annual report EIA–411. The 1999 projection (latest available) shows expected baseload demands growing at 2.2 percent from 1999 to 2004. The net capacity needed to meet the growth in demand is expected to increase by 3,400 megawatts by year 2003. (See line item 13 on Table—Item 2.1 Projected Capacity and Demand—Summer of the EIA–411 report.) The addition of the 100 MW Pickwick Power plant is needed by TVA to meet this projected regional power demand for baseload capacity.

Because *Energy Vision 2020* identified and evaluated alternative supply-side and demand-side energy resources and technologies for meeting peak and baseload capacity needs, these alternatives would not be re-evaluated in this EIS. Market power purchases was one supply-side option identified in the EIS as necessary for meeting TVA's baseload and peaking capacity needs.

Proposed Issues To Be Addressed

TVA contemplates that the EIS would describe the existing environmental and socioeconomic resources affected by transportation of the barges to the site, construction of the balance-of-plant components on site, and operation of the power plant. TVA's evaluation of environmental impacts to these resources would include, but not necessarily be limited to, the potential impacts on air quality, water quality, aquatic and terrestrial ecology, endangered and threatened species, wetlands, floodplains, aesthetics and visual resources, noise, land use, historic and archaeological resources, and socioeconomic resources.

Alternatives

At this time, the alternatives TVA has identified for detailed evaluation include no action and the proposed plant at the Hardin County site. During the scoping process, TVA will investigate the feasibility of other alternatives, including technologies and sites, which meet PPLLC's purposes and needs and the basic requirements of TVA's electricity needs, are reasonably capable of being connected to TVA's transmission system, and otherwise fall within the reasonable range of alternatives to be evaluated in an EIS.

Scoping Process

Scoping, which is integral to the NEPA process, is a procedure that solicits public input to the EIS process to ensure that: (1) Issues are identified early and properly studied; (2) issues of little significance do not consume substantial time and effort; (3) the draft EIS is thorough and balanced; and (4) delays caused by an inadequate EIS are avoided. TVA's NEPA procedures require that the scoping process commence soon after a decision has been reached to prepare an EIS in order to provide an early and open process for determining the scope and for identifying the significant issues related to a proposed action. The scope of alternatives and issues to be addressed in the draft EIS will be determined, in part, from written comments submitted by mail or e-mail, and comments presented orally or in writing at public meetings. The preliminary identification in this notice of reasonable alternatives and environmental issues is not meant to be exhaustive or final.

The scoping process will include both interagency and public scoping. The public is invited to submit written comments or e-mail comments on the scope of this EIS no later than the date given under the **DATES** section of this notice.

TVA will conduct a public scoping meeting at the Pickwick Landing State Park Inn and Conference Center on March 5, 2002. At the meeting, TVA management and project staff will present overviews of the EIS process, PPLLC staff will present an overview of the proposed power plant project, and TVA will answer questions and solicit comments on the issues that the public would like addressed in the EIS. This meeting will be publicized through notices in local newspapers, TVA press releases, information on TVA's Web site at *http://www.tva.gov/environment/reports,* and meetings between TVA officials and local elected officials preceding the public meeting.

The federal agencies identified at this time for inclusion in the interagency scoping are the U.S. Environmental Protection Agency, U.S. Army Corps of Engineers (which has agreed to be a Cooperating Agency in preparation of the EIS), and the U.S. Fish and Wildlife Service. State agencies include the Tennessee Department of Economic and Community Development, Tennessee Department of Environment and Conservation, Tennessee Wildlife Resources Agency, and the Tennessee State Historic Preservation Officer. Regional and local agencies include the Southwest Tennessee Development District, Hardin County government, and the Hardin County Historian. Indian tribes include the Eastern Band of the Cherokee Indians, the United Keetoowah Band of the Cherokee Indians, the Cherokee Nation of Oklahoma, the Chickasaw Nation, the Muscogee (Creek) Nation of Oklahoma, the Poarch Band of Creek Indians, the Kialegee Tribal Town, the Alabama-Quassarte Tribal Town, the Thlopthlocco Tribal Town, and the Alabama-Coushatta Tribe. Other agencies, as appropriate and identified, will also be included.

After consideration of the scoping comments, TVA will establish alternatives and environmental issues to be addressed in the EIS. Following analysis of the environmental consequences of each alternative, TVA will prepare a draft EIS for public review and comment. Notice of availability of the draft EIS will be published by the Environmental Protection Agency in the **Federal Register**. Copies will be sent to public libraries, those requesting a copy, governmental agencies, and Indian Tribes, and a copy will be placed on TVA's Web site at *http://www.tva.gov/environment/reports.* TVA will solicit written comments on the draft EIS, and information about public meetings to comment on the draft EIS will be announced. TVA expects to release a draft EIS by October 2002 and a final EIS by January 2003.

Dated: February 11, 2002.

Kathryn J. Jackson,

Executive Vice President, River System Operations & Environment.

[FR Doc. 02–4052 Filed 2–19–02; 8:45 am]

BILLING CODE 8120–08–P

OFFICE OF THE UNITED STATES TRADE REPRESENTATIVE

Determinations Under the African Growth and Opportunity Act

AGENCY: Office of the United States Trade Representative.

ACTION: Notice.

SUMMARY: The United States Trade Representative has determined that Mozambique has adopted an effective visa system and related procedures to prevent unlawful transshipment and the use of counterfeit documents in connection with shipments of textile and apparel articles and has implemented and follows, or is making substantial progress toward implementing and following, the customs procedures required by the African Growth and Opportunity Act. Therefore, imports of eligible products from Mozambique qualify for the textile and apparel benefits provided under the AGOA.

DATES: February 6, 2002.

FOR FURTHER INFORMATION CONTACT: Chris Moore, Director for Africa Trade Policy, Office of the United States Trade Representative, (202) 395–9514.

SUPPLEMENTARY INFORMATION: The African Growth and Opportunity Act (Title I of the Trade and Development Act of 2000, Pub. L. 106–200) (AGOA) provides preferential tariff treatment for imports of certain textile and apparel products of beneficiary sub-Saharan African countries. The textile and apparel trade benefits under the AGOA are available to imports of eligible products from countries that the President designates as ''beneficiary sub-Saharan African countries,'' provided that these countries (1) have adopted an effective visa system and related procedures to prevent unlawful transshipment and the use of counterfeit documents, and (2) have implemented and follow, or are making substantial progress toward implementing and following, certain customs procedures that assist the Customs Service in verifying the origin of the products.

In Proclamation 7350 (Oct. 2, 2000), the President designated Mozambique as a ''beneficiary sub-Saharan African country.'' Proclamation 7350 delegated to the United States Trade Representative (USTR) the authority to determine whether designated countries have met the two requirements described above. The President directed the USTR to announce any such determinations in the **Federal Register** and to implement them through modifications of the Harmonized Tariff Schedule of the United States (HTS). Based on actions that Mozambique has taken, I have determined that Mozambique has satisfied these two requirements.

Accordingly, pursuant to the authority vested in the USTR by Proclamation 7350, U.S. note 7(a) to subchapter II of chapter 98 of the HTS and U.S. note 1 to subchapter XIX of chapter 98 of the HTS are each modified by inserting ''Mozambique'' in alphabetical sequence in the list of countries. The foregoing modifications to the HTS are effective with respect to articles entered, or withdrawn from warehouse, for consumption on or after the effective date of this notice. Importers claiming preferential tariff treatment under the AGOA for entries of textile and apparel articles should ensure that those entries meet the applicable visa requirements. *See Visa Requirements Under the African Growth and Opportunity Act*, 66 FR 7837 (2001).

Robert B. Zoellick,
United States Trade Representative.

[FR Doc. 02–4060 Filed 2–19–02; 8:45 am]

BILLING CODE 3190–01–M

DEPARTMENT OF TRANSPORTATION

Coast Guard

[USCG 2001–11106]

Information Collection Under Review by the Office of Management and Budget (OMB): 2115–0115, 2115–0078, 2115–0113, and 2115–0013

AGENCY: Coast Guard, DOT.

ACTION: Request for comments.

SUMMARY: In compliance with the Paperwork Reduction Act of 1995, this request for comments announces that the Coast Guard has forwarded four Information Collection Reports (ICRs) abstracted below to the Office of Information and Regulatory Affairs (OIRA) of the Office of Management and Budget (OMB) for review and comment. Our ICRs describe the information we seek to collect from the public. Review and comment by OIRA ensures that we impose only paperwork burdens commensurate with our performance of duties.

DATES: Please submit comments on or before March 22, 2002.

ADDRESSES: To make sure that your comments and related material do not enter the docket [USCG 2001–11106] more than once, please submit them by only one of the following means:

(1)(a) By mail to the Docket Management Facility, U.S. Department of Transportation, room PL–401, 400 Seventh Street SW., Washington, DC 20590–0001. (b) OIRA, 725 17th Street NW, Washington, DC 20503, to the attention of the Desk Officer for the Coast Guard. Caution: Because of recent delays in the delivery of mail, your comments may reach the Facility more quickly if you choose one of the other means described below.

(2)(a) By delivery to room PL–401 at the address given in paragraph (1)(a) above, between 9 a.m. and 5 p.m., Monday through Friday, except Federal holidays. The telephone number is 202–366–9329. (b) OIRA, at the address given in paragraph (1)(b) above, to the attention of the Desk Officer for the Coast Guard.

(3) By fax to (a) the Docket Management Facility at 202–493–2251 or (b) OIRA 202–395–7285, attention: Desk Officer for the Coast Guard.

(4)(a) Electronically through the Web site for the Docket Management System at *http://dms.dot.gov.* (b) OIRA does not have a Web site on which you can post your comments.

The Docket Management Facility maintains the public docket for this notice. Comments and material received from the public, as well as documents mentioned in this notice as being available in the docket, will become part of this docket and will be available for inspection or copying at room PL–401 (Plaza level), 400 Seventh Street SW., Washington, DC, between 9 a.m. and 5 p.m., Monday through Friday, except Federal holidays. You may also find this docket on the Internet at *http://dms.dot.gov.*

Copies of the complete ICRs are available for inspection and copying in public dockets. Copies are available in docket USCG 2001–11106 of the Docket Management Facility between 10 a.m. and 5 p.m., Monday through Friday, except Federal holidays; for inspection and printing on the Internet at *http://dms.dot.gov;* and for inspection from the Commandant (G–CIM–2), U.S. Coast Guard, room 6106, 2100 Second Street S.W., Washington, DC, between 10 a.m. and 4 p.m., Monday through Friday, except Federal holidays.

FOR FURTHER INFORMATION CONTACT: Barbara Davis, Office of Information Management, 202–267–2326, for questions on this document; Dorothy Beard, Chief, Documentary Services Division, U.S. Department of Transportation, 202–366–5149, for questions on the docket.

SUPPLEMENTARY INFORMATION:

Regulatory History

This request constitutes the 30-day notice required by OIRA. The Coast Guard has already published (66 FR 64336 (December 12, 2001)) the 60-day notice required by OIRA. That notice elicited no comments.

Request for Comments

The Coast Guard invites comments on the proposed collection of information to determine whether the collection is necessary for the proper performance of the functions of the Department. In particular, the Coast Guard would appreciate comments addressing: (1) The practical utility of the collection; (2) the accuracy of the Department's estimated burden of the collection; (3) ways to enhance the quality, utility, and clarity of the information that is the subject of the collection; and (4) ways to minimize the burden of collection on respondents, including the use of automated collection techniques or other forms of information technology.

Comments, to DMS or OIRA, must contain the OMB Control Number of the ICR addressed. Comments to DMS must contain the docket number of this request, USCG 2001–11106. Comments to OIRA are best assured of having their full effect if OIRA receives them 30 or fewer days after the publication of this request.

Information Collection Request

1. *Title:* Electrical Engineering—Title 46 CFR Subchapter J.
OMB Control Number: 2115–0115.
Type of Request: Extension of a currently approved collection.
Affected Public: Owners, operators, and builders of vessels.
Forms: This collection of information does not require the public to fill out Coast Guard forms, but does require industry to complete electrical engineering plans to meet the performance requirements on new-built vessels.
Abstract: We need the information sought here to ensure compliance with our rules on electrical engineering for the design and construction of U.S.-flag commercial vessels.
Annual Estimated Burden Hours: The estimated burden is 1,153 hours a year.

2. *Title:* Operations Manual and Amendments for Facilities Transferring Oil and Hazardous Materials in Bulk.
OMB Control Number: 2115–0078.
Type of Request: Extension of a currently approved collection.
Affected Public: Owners and operators of waterfront facilities.
Forms: This collection of information does not require the public to fill out Coast Guard forms, but does require a new facility that transfers oil and hazardous material to develop an operations manual for personnel to follow in the proper and safe procedures for dealing with any spills that occur during transfer.
Abstract: An operations manual is mandatory for waterfront facilities that will be transferring bulk oil or hazardous materials to or from vessels. It establishes procedures for personnel of the facility to follow when conducting the transfer and in the event of a spill.
Annual Estimated Burden Hours: The estimated burden is 27,369 hours a year.

3. *Title:* Self-propelled Vessels Carrying Liquefied Gas.
OMB Control Number: 2115–0113.
Type of Request: Extension of a currently approved collection.
Affected Public: Owners and operators of self-propelled vessels carrying liquefied gas.
Forms: CG–4355.
Abstract: We need the information sought here to ensure compliance with our rules for the design and operation of carriers of liquefied gas.
Annual Estimated Burden Hours: The estimated burden is 5,131 hours a year.

4. *Title:* Application and Permit to Handle Hazardous Materials.
OMB Control Number: 2115–0013.
Type of Request: Extension of a currently approved collection.
Affected Public: Shipping agents and terminal operators that handle hazardous materials.
Forms: CG–4260.
Abstract: The information sought here ensures the safe handling of explosives and other hazardous materials around ports and aboard vessels. Shipping agents and terminal operators who handle the above commodities must comply.
Annual Estimated Burden Hours: The estimated burden is 292 hours a year.

Dated: February 13, 2002.

N.S. Heiner,

Acting, Director of Information and Technology.

[FR Doc. 02–4083 Filed 2–19–02; 8:45 am]

BILLING CODE 4910–15–P

DEPARTMENT OF TRANSPORTATION

Coast Guard

[USCG–2002–11490]

Towing Safety Advisory Committee; Meetings

AGENCY: Coast Guard, DOT.

ACTION: Notice of meetings.

SUMMARY: The Towing Safety Advisory Committee (TSAC) and its working groups will meet as required to discuss various issues relating to shallow-draft inland and coastal waterway navigation and towing safety. All meetings will be open to the public.

DATES: TSAC will meet on Thursday, March 14, 2002, from 8 a.m. to 12:30 p.m. The working groups will meet on Wednesday, March 13, 2002, from 9 a.m. to 3:30 p.m. These meetings may close early if all business is finished. Written material and requests to make oral presentations should reach the Coast Guard on or before February 25, 2002. Requests to have a copy of your material distributed to each member of the Committee or working groups should reach the Coast Guard on or before February 25, 2002.

ADDRESSES: TSAC will meet in the Commission Room, Port of San Francisco, Pier One, Embarcadero, San Francisco, CA. The working groups will begin in the same room and may move to separate spaces designated at that time. Send written material and requests to make oral presentations to Mr. Gerald P. Miante, Commandant (G–MSO–1), U.S. Coast Guard Headquarters, 2100 Second Street SW., Washington, DC 20593–0001. This notice is available on the Internet at *http://dms.dot.gov.*

FOR FURTHER INFORMATION CONTACT: Mr. Gerald P. Miante, Assistant Executive Director, telephone 202–267–0229, or LCDR Lance Lindsay, telephone 202–267–0218, fax for both is 202–267–4570, or e-mail at: *gmiante@comdt.uscg.mil.*

SUPPLEMENTARY INFORMATION: Notice of these meetings is given under the Federal Advisory Committee Act, 5 U.S.C. App. 2.

Agenda of Committee Meeting

The agenda tentatively includes the following:

(1) Status Report of the Crew Alertness Working Group,

(2) Status Report of the Gulf Coast Mariners Association (GCMA) Report Working Group,

(3) Status Report Licensing Implementation Working Group,

(4) Status Report of the rulemaking on Fire-Suppression Systems and Voyage Planning for Towing Vessels, and

(5) Status Report of the Maritime Security Working Group.

(6) Committee consideration of a draft task statement from the Towing Vessel Regulatory Review Work Group.

Procedural

All meetings are open to the public. Please note that the meetings may close early if all business is finished. Members of the public may make oral presentations during the meetings. If you would like to make an oral presentation at a meeting, please notify the Assistant Executive Director no later than February 25, 2002. Written material for distribution at a meeting should reach the Coast Guard no later than February 25, 2002. If you would like a copy of your material distributed to each member of the committee or subcommittee in advance of a meeting, please submit 25 copies to the Assistant Executive Director no later than February 25, 2002.

Information on Services for Individuals With Disabilities

For information on facilities or services for individuals with disabilities or to request special assistance at the meetings, contact the Assistant Executive Director as soon as possible.

Dated: February 11, 2002.

Howard L. Hine,

Acting Director of Standards, Marine Safety and Environmental Protection.

[FR Doc. 02–4084 Filed 2–19–02; 8:45 am]

BILLING CODE 4910–15–P

DEPARTMENT OF THE TREASURY

Financial Crimes Enforcement Network; Agency Information Collection Activities; Proposed Collection; Comment Request; Designation of Exempt Person Form

AGENCY: Financial Crimes Enforcement Network (''FinCEN''), Treasury.

ACTION: Notice and request for comments.

SUMMARY: FinCEN, a bureau of the U.S. Department of the Treasury (''Treasury''), invites all interested parties to comment on its continuing collection of information through its ''Designation of Exempt Person'' form that is used by banks and other depository institutions to designate their eligible customers as exempt from the requirement to report transactions in currency over $10,000.

DATES: Written comments should be received on or before April 22, 2002.

ADDRESSES: Direct all written comments to: Office of Chief Counsel, Financial Crimes Enforcement Network, U.S. Department of the Treasury, P.O. Box 1618, Vienna, VA 22183–1618, *Attention:* PRA Comments—Designation of Exempt Person form. Comments also may be submitted by electronic mail to the following Internet address: ''regcomments@fincen.treas.gov'' with the caption in the body of the text, ''*Attention:* PRA Comments—Designation of Exempt Person form.''

FOR FURTHER INFORMATION CONTACT: Requests for additional information or for a copy of the form should be directed to Dawn Adams, Regulatory Programs Specialist, Office of Compliance and Regulatory Enforcement, (202) 354–6015, or Albert R. Zarate, Senior Regulatory Counsel, Office of Chief Counsel, FinCEN, (703) 905–3590.

SUPPLEMENTARY INFORMATION: Pursuant to the Paperwork Reduction Act of 1995, Public Law 104–13 (44 U.S.C. 3506(c)(2)(A)), FinCEN is soliciting comments on the collection of information described below.

Title: Designation of Exempt Person.

OMB Number: 1506–0012.

Form Number: TD F 90–22–53.

Abstract: The Bank Secrecy Act, Titles I and II of Public Law 91–508, as amended, codified at 12 U.S.C. 1829b, 12 U.S.C. 1951–1959, and 31 U.S.C. 5311–5331, authorizes the Secretary of the Treasury, among other things, to issue regulations requiring records and reports that are determined to have a high degree of usefulness in criminal, tax, and regulatory matters, or in the conduct of intelligence or counterintelligence activities, including analysis, to protect against international terrorism. The Bank Secrecy Act also authorizes the Secretary to require the establishment of counter-money laundering programs and compliance procedures. Regulations implementing Title II of the Bank Secrecy Act (codified at 31 U.S.C. 5311–5330) appear at 31 CFR Part 103. The authority of the Secretary to administer Title II of the Bank Secrecy Act has been delegated to the Director of FinCEN.

The reporting by financial institutions of transactions in currency in excess of $10,000 has long been a major component of the Treasury's implementation of the Bank Secrecy Act. The reporting requirement is imposed by 31 CFR 103.22, a rule issued under the broad authority granted to the Secretary of the Treasury by 31 U.S.C. 5313(a) to require reports of domestic coins and currency transactions.

The Money Laundering Suppression Act of 1994, Title IV of the Riegle Community Development and Regulatory Improvement Act (Public Law 103–325) amended 31 U.S.C. 5313. The statutory amendments mandate exemptions from currency transaction reporting in the case of customers that are other banks, certain governmental entities, or businesses for which reporting would serve little or no law enforcement purpose. The amendments also authorize Treasury to exempt certain other businesses.

On September 8, 1997, and September 31, 1998, Treasury issued final rules regarding these statutory amendments (62 FR 47141 and 63 FR 50147, respectively). The final rules reform and simplify the process by which banks may exempt eligible customers. The final rules, as further amended by 65 FR 46356, are set forth at 31 CFR 103.22(d).

Under the simplified exemption rules, a key requirement is a ''designation'' sent to the Treasury indicating that a customer will be treated by the bank as an exempt person, so that no further currency transaction reports will be filed on the customer's cash transactions exceeding $10,000. As part of the simplification process, Treasury previously issued a form specifically for making that designation.

The information collected on the form, Designation of Exempt Person, TD F 90–22.53, is required to exempt bank customers from currency transaction reporting. The information is used to help determine whether a bank has properly exempted its customers. The collection of information is mandatory.

Type of Review: Continuation of currently approved collection.

Affected Public: Business or other for-profit institutions.

Estimated Number of Respondents: 5,000.

Estimated Total Annual Responses: 180,000.

Estimated Total Annual Burden Hours: Reporting average of 10 minutes per response; recordkeeping average of 1 hour per response.

Request for Comments: Comments submitted in response to this notice will be summarized and/or included in the request for Office of Management and Budget approval. All comments will become a matter of public record. Comments are invited on: (a) Whether the collection of information is necessary for the proper performance of the agency, including whether the information shall have practical utility; (b) the accuracy of the agency's estimate of the burden collection of information; (c) ways to enhance quality, utility, and clarity of the information to be collected; (d) ways to minimize the burden of the collection of information on respondents, including through the use of automated collection techniques or other forms of information technology; and (e) estimates of capital or start-up costs and costs of operation, maintenance and purchase of services to provide information.

Dated: February 11, 2002.

James F. Sloan,

Director, Financial Crimes Enforcement Network.

[FR Doc. 02–4001 Filed 2–19–02; 8:45 am]

BILLING CODE 4810–02–P

DEPARTMENT OF THE TREASURY

Internal Revenue Service

Open Meeting of the Florida Citizen Advocacy Panel

ACTION: Notice.

SUMMARY: An open meeting of the Florida Citizen Advocacy Panel will be held in Sunrise, Florida.

DATES: The meeting will be held Saturday, February 23, 2002.

FOR FURTHER INFORMATION CONTACT: Nancy Ferree at 1–888–912–1227, or 954–423–7973.

SUPPLEMENTARY INFORMATION: Notice is hereby given pursuant to section

10(a)(2) of the Federal Advisory Committee Act, 5 U.S.C. App. (1988) that an open meeting of the Citizen Advocacy Panel will be held Saturday, February 23, 2002, from 9:00 a.m. to 4:00 p.m, at the Sunrise Hilton, 3003 N. University Drive, Sunrise, Florida 33322. The public is invited to make oral comments. Individual comments will be limited to 10 minutes. If you would like to have the CAP consider a written statement, please call 1–888–912–1227 or 954–423–7973, or write Nancy Ferree, CAP Office, 7771 W. Oakland Park Blvd. Rm. 225, Sunrise, FL 33351, or e-mail *firstcapsfl@mindspring.com.* Due to limited conference space, notification of intent to attend the meeting must be made with Nancy Ferree. Ms. Ferree can be reached at 1–888–912–1227 or 954–423–7973, or e-mail *firstcapsfl@mindspring.com.*

The agenda will include the following: Various IRS issue updates and reports by the CAP sub-groups.

Note: Last minute changes to the agenda are possible and could prevent effective advance notice.

Dated: February 12, 2002.

Cynthia Vanderpool,

Acting Director, CAP, Communication and Liasion.

[FR Doc. 02–4089 Filed 2–19–02; 8:45 am]

BILLING CODE 4830–01–P

DEPARTMENT OF THE TREASURY

Office of Thrift Supervision

[AC–1: OTS Nos. H–3825 and 00560]

Mt. Troy Savings Bank, FSB, Pittsburgh, Pennsylvania; Approval of Conversion Application

Notice is hereby given that on, February 12, 2002, the Director, Examination Policy, Office of Thrift Supervision (''OTS''), or her designee, acting pursuant to delegated authority, approved the application of Mt. Troy Savings Bank, FSB, Pittsburgh, Pennsylvania, to convert to the stock form of organization. Copies of the application are available for inspection by appointment (phone number: 202–906–5922 or e-mail: *Public.Info@OTS.Treas.gov)* at the Public Reading Room, OTS, 1700 G Street, NW., Washington, DC 20552, and the OTS Northeast Regional Office, 10 Exchange Place, 18th Floor, Jersey City, New Jersey 07302.

Dated: February 13, 2002.

By the Office of Thrift Supervision.

Nadine Y. Washington,

Corporate Secretary.

[FR Doc. 02–4017 Filed 2–19–02; 8:45 am]

BILLING CODE 6720–01–M

DEPARTMENT OF THE TREASURY

Office of Thrift Supervision

[AC–2: OTS Nos. H–3289 and 04726]

Willow Grove Bancorp, Inc., Pennsylvania; Approval of Conversion Application

Notice is hereby given that on, February 11, 2002, the Director, Examination Policy, Office of Thrift Supervision (''OTS''), or her designee, acting pursuant to delegated authority, approved the application of Willow Grove Bancorp, Inc., Maple Glen, Pennsylvania, to convert to the stock form of organization. Copies of the application are available for inspection by appointment (phone number: 202–906–5922 or e-mail: *Public.Info@OTS.Treas.gov*) at the Public Reading Room, OTS, 1700 G Street, NW, Washington, DC 20552, and the OTS Northeast Regional Office, 10 Exchange Place, 18th Floor, Jersey City, New Jersey 07302.

Dated: February 14, 2002.

By the Office of Thrift Supervision.

Nadine Y. Washington,

Corporate Secretary.

[FR Doc. 02–4092 Filed 2–19–02; 8:45 am]

BILLING CODE 6720–02–M

Notices

Federal Register

Vol. 67, No. 34

Wednesday, February 20, 2002

This section of the FEDERAL REGISTER contains documents other than rules or proposed rules that are applicable to the public. Notices of hearings and investigations, committee meetings, agency decisions and rulings, delegations of authority, filing of petitions and applications and agency statements of organization and functions are examples of documents appearing in this section.

AGENCY FOR INTERNATIONAL DEVELOPMENT

Notice of Public Information Collections Being Reviewed by the Agency for International Development; Comments Requested

SUMMARY: U.S. Agency for International Development (USAID) is making efforts to reduce the paperwork burden. USAID invites the general public and other Federal agencies to take this opportunity to comment on the following proposed and/or continuing information collections, as required by the Paperwork Reduction Act for 1995. Comments are requested concerning: (a) Whether the proposed or continuing collections of information is necessary for the proper performance of the functions of the agency, including whether the information shall have practical utility; (b) the accuracy of the burden estimates; (c) ways to enhance the quality, utility, and clarity of the information collected; and (d) ways to minimize the burden of the collection of information on the respondents, including the use of automated collection techniques or other forms of information technology.

DATES: Submit comments on or before April 22, 2002.

FOR FURTHER INFORMATION CONTACT: Beverly Johnson, Bureau for Management, Office of Administrative Services, Information and Records Division, U.S. Agency for International Development, Room 2.07–106, RRB, Washington, DC 20523, (202) 712–1365 or via e-mail *bjohnson@usaid.gov.*

SUPPLEMENTARY INFORMATION:

OMB No: OMB 0412–0506.

Form No.: AID 1420–50.

Title: Vendor Database (formerly known as ACRIS) Instruction Books for the Organization Profile.

Type of Review: Renewal of Information Collection.

Purpose: USAID procuring activities are required to establish bidders mailing lists to assure access to sources and to obtain meaningful competition (41 CFR section 1–2.205). In compliance with this requirement, USAID's Office of Small and Disadvantaged Business Utilization/Minority Resource Center has responsibility for developing and maintaining a Contractor's Index of bidders/offerors capable of furnishing services for use by the USAID procuring activities. (AIDAR 719.271–2(b)(4)).

Annual Reporting Burden

Respondents: 1,000.

Total annual responses: 1,000.

Total annual hours requested: 1,000 hours.

Dated: February 12, 2002.

Joanne Paskar, Chief,

Information and Records Division, Office of Administrative Services, Bureau for Management.

[FR Doc. 02–4042 Filed 2–19–02; 8:45 am]

BILLING CODE 6116–01–M

DEPARTMENT OF AGRICULTURE

Forest Service

Helena National Forest Weed Treatment Project Helena National Forest, Powell, Lewis & Clark, Jefferson, Broadwater, and Meagher Counties, Montana

AGENCY: Forest Service, USDA.

ACTION: Notice; intent to prepare Environmental Impact Statement.

SUMMARY: The USDA, Forest Service will prepare an Environmental Impact Statement (EIS) for weed treatments on the Helena National Forest including wilderness and roadless areas. The treatment plan will utilize an integrated pest management approach, utilizing a variety of chemical, biological and mechanical controls. Chemical treatments will include both ground and aerial herbicide applications.

Further analysis of the proposed action and alternatives to that proposal may result in a decision(s) that includes amendments to the Forest Plan.

DATES: Comments concerning the scope of the analysis should be received in writing no later than June 1, 2002.

ADDRESSES: The responsible official is Thomas J. Clifford, Forest Supervisor, Helena National Forest, Supervisor's Office, 2880 Skyway Drive, Helena, MT 59601. Phone: (406) 449–5201.

FOR FURTHER INFORMATION CONTACT: Dea Nelson, Townsend Ranger District, 415 So. Front Townsend, MT 59644. Phone: (406) 266–3425.

SUPPLEMENTARY INFORMATION: The project would occur on National Forest lands of the Townsend, Helena, and Lincoln Ranger Districts. Treatments would take place in general forest zones as well as the Elkhorn Wildlife Management Area, the Gates of the Mountains Wilderness Area, the Scapegoat Wilderness Area and inventoried roadless areas. The treatment plan will utilize an integrated pest management approach, utilizing a variety of chemical, biological and mechanical controls. Chemical treatments will include both ground and aerial herbicide applications. Approximately 18,000 acres will be treated with ground based application equipment and approximately 5,000 acres with aerial equipment, either fixed wing or helicopters. Chemical applications will take place at the appropriate time of year for the individual weed species. Biological controls will be introduced where appropriate and as they become available. These will include insects, pathogens, and grazing of livestock such as sheep or goats to control weeds in situations where similar practices have been successful in other locations. Some particularly sensitive area or areas of small, new infestations may be treated mechanically, which could include hand pulling or cultivation.

This EIS will tier to the Helena Forest Plan Final EIS of April 1986, that provides program goals, objectives, and standards and guidelines for conducting management activities in this area. All activities associated with the proposal will be designed to maintain or enhance the resource objectives identified in the Forest Plan.

The Forest Service is seeking information and comments from Federal, State, and local agencies together with organizations or individuals who may be interested in or affected by the proposed action. The Forest Service invites written comments and suggestions on the issues for the proposal and the area being analyzed. Information received will be used in preparation of the Draft EIS.

Preparation of the EIS will include the following steps:

1. Identification of issues to be analyzed in depth.

2. Identification of additional reasonable alternatives.

3. Identification of potential environmental effects of the alternatives.

Alternatives to this proposal will include the ''no action'' alternative, and other alternatives will examine variations in the amount and method of weed treatment.

The preliminary issues identified are:

1. The potential impacts of noxious weed treatment on wildlife.

2. The potential impacts of noxious weed treatment on water quality and fisheries.

3. The potential impacts of noxious weed treatment on native grasses, forbs, shrubs and trees.

4. The potential effects on human health from herbicide use.

5. The potential effects of noxious weed treatment in Wilderness Areas on the quality of the wilderness experience.

The Forest Service will analyze and disclose in the DEIS and FEIS the environmental effects of the proposed action and a reasonable range of alternatives. The DEIS and FEIS will disclose the direct, indirect and cumulative environmental effects of each alternative and its associated site-specific mitigation measures.

Public participation is especially important at several points of the analysis. Interested parties may visit with the Forest Service officials at any time during the analysis. However, two periods of time are specifically identified for the receipt of comments. The first comment period is during the scoping process when the public is invited to give written comments to the Forest Service. The Helena National Forest would like to receive scoping comments by June 1, 2002. The second review period is during the 45 day review of the DEIS when the public is invited to comment on the DEIS.

The DEIS is expected to be filed with the Environmental Protection Agency (EPA) and available for public review in August, 2002. At that time, the EPA will publish a notice of availability of the DEIS in the **Federal Register**.

The comment period on the DEIS will be 45 cays from the date the notice of availability is published in the **Federal Register**.

At this early stage in the scoping process, the Forest Service believes it is important to give reviewers notice of several court rulings related to public participation in the environmental review process. First, reviews of DEIS must structure their participation in the environmental review of the proposal so that it is meaningful and alerts an agency to the reviewer's position and contentions. *Vermont Yankee Nuclear Power Corp.* v. *NRDC. 435 U.S. 519, 553 (1978).* Secondly, environmental objections that could be raised at the draft environmental impact statement stage, but that are not raised until after completion of the FEIS may be waived or dismissed by the courts. *City of Angoon* v. *Hodel,* 803 F. 2d 10 1 6, 1022 (9th cir. 1986) and *Wisconsin Hermitages, Inc.* v. *Harris,* 490 F. Supp. 1338 (E.D. Wis. 1980). Because of these court rulings, it is very important that those interested in this proposed action participate by the close of the 45-day comment period so that substantive comments and objections are made available to the Forest Service at a time when it can meaningfully consider them and respond to them in the FEIS.

To assist the Forest Service in identifying and considered issues and concerns on the proposed action, comments on the DEIS should be as specific as possible. It is also helpful if comments refer to specific pages or chapters of the draft statement. Comments may also address the adequacy of the DEIS or the merits of the alternatives formulated and discussed in the statement. (Reviewers may wish to refer to the Council on Environmental Quality Regulations for implementing the procedural provisions of the National Environmental Policy Act at 40 CFR 1503.3 in addressing these points.)

After the comment period ends on the DEIS, the comments will be analyzed and considered by the Forest Service in preparing the FEIS. The FEIS is expected to be filed in January, 2003.

Dated: February 12, 2002.

Thomas J. Clifford,

Forest Supervisor, Helena National Forest.

[FR Doc. 02–4051 Filed 2–19–02; 8:45 am]

BILLING CODE 3910–11–M

DEPARTMENT OF AGRICULTURE

Forest Service

Deschutes and Ochoco National Forests Resource Advisory Committee; Meeting

AGENCY: Forest Service, USDA.

ACTION: Notice of meeting.

SUMMARY: The Deschutes and Ochoco National Forests Resource Advisory Committee will meet on Thursday, March 7, 2002 and Tuesday, March 19, 2002 at the Central Oregon Intergovernmental Council building, main conference room, 2363 SW Glacier Place, Redmond, Oregon. The meeting will begin at 9 a.m. and continue until 5 p.m. Committee members will review projects proposed and make recommendations under Resource Advisory Committee consideration under Title II of the Secure Rural Schools and Community Self-Determination Act of 2000. All Deschutes and Ochoco National Forests Resource Advisory Committee meetings are open to the public. Interested citizens are welcome to attend.

FOR FURTHER INFORMATION CONTACT: Direct questions regarding this meeting to Leslie Weldon, Designated Federal Official, USDA, Deschutes National Forest, 1645 Highway 20 East, Bend, Oregon 97702, 541–383–5512.

Dated: February 13, 2002.

David Summer,

Acting Forest Supervisor, Deschutes National Forest.

[FR Doc. 02–4019 Filed 2–19–02; 8:45 am]

BILLING CODE 3410–11–M

DEPARTMENT OF AGRICULTURE

Forest Service

Hood/Willamette Resource Advisory Committee (RAC)

AGENCY: Forest Service, USDA.

ACTION: Notice of meeting.

SUMMARY: The Hood/Willamette Resource Advisory Committee (RAC) will meet on Friday, March 8, 2002. The meeting is scheduled to begin at 9 a.m. and will conclude at approximately 4 p.m. The meeting will be held at the Salem Office of the Bureau of Land Management Office; 1717 Fabry Road SE, Salem, Oregon; (503) 375–5646. The tentative agenda includes: (1) Reviewing and Recommending Projects; (2) Public Forum. The Public Forum is tentatively scheduled to begin at 1 p.m. Time allotted for individual presentations will be limited to 3–4 minutes. Written comments are encouraged, particularly if the material cannot be presented within the time limits for the Public Forum. Written comments may be submitted prior to the March 8 meeting by sending them to Designated Federal Official Donna Short at the address given below.

FOR FURTHER INFORMATION CONTACT: For more information regarding this meeting, contact Designated Federal Official Donna Short; Sweet Home Ranger District; 3225 Highway 20, Sweet Home, Oregon 97386; (541) 367–9220.

Dated: February 12, 2002.

Kim Titus,

Acting Deputy Forest Supervisor.

[FR Doc. 02–4020 Filed 2–19–02; 8:45 am]

BILLING CODE 3410–11–M

CHEMICAL SAFETY AND HAZARD INVESTIGATION BOARD

Sunshine Act Meeting

The United States Chemical Safety and Hazard Investigation Board announces that it will convene a Public Meeting beginning at 10:00 a.m. local time on February 27, 2002, at 2175 K Street, Suite 400 Conference Room. Topics will include:

Performance Goal #1: Produce Timely, High Quality Investigation Reports, Recommendations, and Other Technical Reports

1. Initiation of CSB's investigation into the January 16 fatal toxic gas release that occurred at the Georgia-Pacific Corporation's Naheola Mill.

2. Update on CSB investigation into the July 17, 2001 catastrophic failure of a storage tank containing spent sulfuric acid at Motiva Enterprise's Delaware City (Del.) refinery.

3. Update on CSB investigation into a fatal explosion at the BP Amoco Polymers plant in Augusta, Georgia on March 13, 2001, that killed three workers.

4. Results of the CSB investigation into the fatal incident that occurred on February 2, 2001, at the Bethlehem Steel Burns Harbor Mill in Chesterton, Indiana that killed two workers and injured four others.

5. CSB case study of a destructive explosion that occurred at the plant of Concept Sciences Inc., near Allentown, PA, on February 19, 1999.

6. Update on reactive chemical hazard investigation.

Performance Goal #2: Develop Effective Outreach and Partnerships With Stakeholders

7. Creation of CSB's Office of Prevention, Outreach, and Policy (OPOP).

8. CSB/National Institute of Environmental Health Sciences (NIEHS) Spring Workshop.

9. Participation in American Institute for Chemical Engineers' (AIChE) Center for Chemical Process Safety (CCPS) Activities.

Performance Goal #3: Implement a System for Chemical Accident Data Collection and Analysis That Can Be Used to Measure Prevention Effectiveness

10. CSB Data initiatives.

Enabling Goal: Enhance Management of CSB and Establish a Diverse, Highly Skilled, Productive Workforce

11. Chief Operating Officer position filling process.

12. Tentative date for next Board meeting.

The meeting will be open to the public. Please notify CSB if a translator or interpreter is needed, 10 business days prior to the public meeting. For more information, please contact the Chemical Safety and Hazard Investigation Board's Office of Congressional and Public Affairs, (202)–261–7600, or visit our Web site at: *www.csb.gov.*

Christopher W. Warner,

General Counsel.

[FR Doc. 02–4223 Filed 2–15–02; 3:54 pm]

BILLING CODE 6350–01–P

DEPARTMENT OF COMMERCE

International Trade Administration

[A–428–825]

Stainless Steel Sheet and Strip in Coils From Germany; Notice of Final Results of Antidumping Duty Administrative Review

AGENCY: Import Administration, International Trade Administration, Department of Commerce.

ACTION: Notice of Final Results of Antidumping Duty Administrative Review.

SUMMARY: On August 13, 2001, the Department of Commerce (the Department) publishedthe preliminary results of the administrative review of the antidumping duty order on stainless steel sheet and strip in coils from Germany. This review covers one manufacturer/exporter. The period of review (POR) is January 4, 1999 through June 30, 2000.

Based on our analysis of the comments received, we have made changes in the margin calculations. Therefore, the final results differ from the preliminary results. The final weighted–average dumping margin for the reviewed firm is listed below in the section entitled ''Final Results of the Review.''

EFFECTIVE DATE: February 20, 2002.

FOR FURTHER INFORMATION CONTACT: Patricia Tran, Michael Heaney, or Robert James at (202) 482–1121, (202) 482–4475, or (202) 482–0649, respectively, Antidumping and Countervailing Duty Enforcement Group III, Import Administration, International Trade Administration, U.S. Department of Commerce, 14th Street and Constitution Avenue, NW, Washington, DC 20230.

SUPPLEMENTARY INFORMATION:

The Applicable Statute and Regulations

Unless otherwise indicated, all citations to the Tariff Act of 1930, as amended (the Tariff Act), are references to the provisions effective January 1, 1995, the effective date of the amendments made to the Tariff Act by the Uruguay Round Agreements Act (URAA). In addition, unless otherwise indicated, all citations to the Department's regulations are to the regulations codified at 19 CFR Part 351 (2000).

Scope of the Review

For purposes of this order, the products covered are certain stainless steel sheet and strip in coils. Stainless steel is an alloy steel containing, by weight, 1.2 percent or less of carbon and 10.5 percent or more of chromium, with or without other elements. The subject sheet and strip is a flat–rolled product in coils that is greater than 9.5 mm in width and less than 4.75 mm in thickness, and that is annealed or otherwise heat treated and pickled or otherwise descaled. The subject sheet and strip may also be further processed (e.g., cold–rolled, polished, aluminized, coated, etc.) provided that it maintains the specific dimensions of sheet and strip following such processing.

The merchandise subject to this order is classified in the Harmonized Tariff Schedule of the United States (HTS) at subheadings: 7219.13.00.31, 7219.13.00.51, 7219.13.00.71, 7219.13.00.81, 7219.14.00.30, 7219.14.00.65, 7219.14.00.90, 7219.32.00.05, 7219.32.00.20, 7219.32.00.25, 7219.32.00.35, 7219.32.00.36, 7219.32.00.38, 7219.32.00.42, 7219.32.00.44, 7219.33.00.05, 7219.33.00.20, 7219.33.00.25, 7219.33.00.35, 7219.33.00.36, 7219.33.00.38, 7219.33.00.42, 7219.33.00.44, 7219.34.00.05, 7219.34.00.20, 7219.34.00.25, 7219.34.00.30, 7219.34.00.35, 7219.35.00.05, 7219.35.00.15, 7219.35.00.30, 7219.35.00.35, 7219.90.00.10, 7219.90.00.20, 7219.90.00.25, 7219.90.00.60, 7219.90.00.80, 7220.12.10.00, 7220.12.50.00,

7220.20.10.10, 7220.20.10.15, 7220.20.10.60, 7220.20.10.80, 7220.20.60.05, 7220.20.60.10, 7220.20.60.15, 7220.20.60.60, 7220.20.60.80, 7220.20.70.05, 7220.20.70.10, 7220.20.70.15, 7220.20.70.60, 7220.20.70.80, 7220.20.80.00, 7220.20.90.30, 7220.20.90.60, 7220.90.00.10, 7220.90.00.15, 7220.90.00.60, and 7220.90.00.80. Although the HTS subheadings are provided for convenience and Customs purposes, the Department's written description of the merchandise under review is dispositive.

Excluded from the scope of this order are the following: (1) sheet and strip that is not annealed or otherwise heat treated and pickled or otherwise descaled; (2) sheet and strip that is cut to length; (3) plate (i.e., flat–rolled stainless steel products of a thickness of 4.75 mm or more); (4) flat wire (i.e., cold–rolled sections, with a prepared edge, rectangular in shape, of a width of not more than 9.5 mm); and (5) razor blade steel. Razor blade steel is a flat–rolled product of stainless steel, not further worked than cold–rolled (cold–reduced), in coils, of a width of not more than 23 mm and a thickness of 0.266 mm or less, containing, by weight, 12.5 to 14.5

percent chromium, and certified at the time of entry to be used in the manufacture of razor blades. See Chapter 72 of the HTSUS, ''Additional U.S. Note''1(d).

In response to comments by interested parties, the Department has determined that certain specialty stainless steel products are also excluded from the scope of this order. These excluded products are described below.

Flapper valve steel is defined as stainless steel strip in coils containing, by weight, between 0.37 and 0.43 percent carbon, between 1.15 and 1.35 percent molybdenum, and between 0.20 and 0.80 percent manganese. This steel also contains, by weight, phosphorus of 0.025 percent or less, silicon of between 0.20 and 0.50 percent, and sulfur of 0.020 percent or less. The product is manufactured by means of vacuum arc remelting, with inclusion controls for sulphide of no more than 0.04 percent and for oxide of no more than 0.05 percent. Flapper valve steel has a tensile strength of between 210 and 300 ksi, yield strength of between 170 and 270 ksi, plus or minus 8 ksi, and a hardness (Hv) of between 460 and 590. Flapper valve steel is most commonly used to produce specialty flapper valves for compressors.

Also excluded is a product referred to as suspension foil, a specialty steel product used in the manufacture of suspension assemblies for computer disk drives. Suspension foil is described as 302/304 grade or 202 grade stainless steel of a thickness between 14 and 127 microns, with a thickness tolerance of plus—or–minus 2.01 microns, and surface glossiness of 200 to 700 percent Gs. Suspension foil must be supplied in coil widths of not more than 407 mm, and with a mass of 225 kg or less. Roll marks may only be visible on one side, with no scratches of measurable depth. The material must exhibit residual stresses of 2 mm maximum deflection, and flatness of 1.6 mm over 685 mm length.

Certain stainless steel foil for automotive catalytic converters is also excluded from the scope of this order. This stainless steel strip in coils is a specialty foil with a thickness of between 20 and 110 microns used to produce a metallic substrate with a honeycomb structure for use in automotive catalytic converters. The steel contains, by weight, carbon of no more than 0.030 percent, silicon of no more than 1.0 percent, manganese of no more than 1.0 percent, chromium of between 19 and 22 percent, aluminum of no less than 5.0 percent, phosphorus of no more than 0.045 percent, sulfur of no more than 0.03 percent, lanthanum of between 0.002 and 0.05 percent, and total rare earth elements of more than 0.06 percent, with the balance iron.

Permanent magnet iron–chromium–cobalt alloy stainless strip is also excluded from the scope of this order. This ductile stainless steel strip contains, by weight, 26 to 30 percent chromium, and 7 to 10 percent cobalt, with the remainder of iron, in widths 228.6 mm or less, and a thickness between 0.127 and 1.270 mm. It exhibits magnetic remanence between 9,000 and 12,000 gauss, and a coercivity of between 50 and 300 oersteds. This product is most commonly used in electronic sensors and is currently available under proprietary trade names such as ''Arnokrome III.''[1]

Certain electrical resistance alloy steel is also excluded from the scope of this order. This product is defined as a non–magnetic stainless steel manufactured to American Society of Testing and Materials (ASTM) specification B344 and containing, by weight, 36 percent nickel, 18 percent chromium, and 46 percent iron, and is most notable for its resistance to high temperature corrosion. It has a melting point of 1390 degrees Celsius and displays a creep rupture limit of 4 kilograms per square millimeter at 1000 degrees Celsius. This steel is most commonly used in the production of heating ribbons for circuit breakers and industrial furnaces, and in rheostats for railway locomotives. The product is currently available under proprietary trade names such as ''Gilphy 36.''[2]

Certain martensitic precipitation–hardenable stainless steel is also excluded from the scope of this order. This high–strength, ductile stainless steel product is designated under the Unified Numbering System (UNS) as S45500–grade steel, and contains, by weight, 11 to 13 percent chromium, and 7 to 10 percent nickel. Carbon, manganese, silicon and molybdenum each comprise, by weight, 0.05 percent or less, with phosphorus and sulfur each comprising, by weight, 0.03 percent or less. This steel has copper, niobium, and titanium added to achieve aging, and will exhibit yield strengths as high as 1700 Mpa and ultimate tensile strengths as high as 1750 Mpa after aging, with elongation percentages of 3 percent or less in 50 mm. It is generally provided in thicknesses between 0.635 and 0.787 mm, and in widths of 25.4 mm. This product is most commonly used in the manufacture of television tubes and is currently available under proprietary trade names such as ''Durphynox 17.''[3]

Finally, three specialty stainless steels typically used in certain industrial blades and surgical and medical instruments are also excluded from the scope of this order. These include stainless steel strip in coils used in the production of textile cutting tools (e.g., carpet knives).[4] This steel is similar to ASTM grade 440F, but containing, by weight, 0.5 to 0.7 percent of molybdenum. The steel also contains, by weight, carbon of between 1.0 and 1.1 percent, sulfur of 0.020 percent or less, and includes between 0.20 and 0.30 percent copper and between 0.20 and 0.50 percent cobalt. This steel is sold under proprietary names such as ''GIN4 Mo.'' The second excluded stainless steel strip in coils is similar to AISI 420–J2 and contains, by weight, carbon of between 0.62 and 0.70 percent, silicon of between 0.20 and 0.50 percent, manganese of between 0.45 and 0.80 percent, phosphorus of no more than 0.025 percent and sulfur of no more than 0.020 percent. This steel has a carbide density on average of 100 carbide particles per square micron. An example of this product is ''GIN5'' steel.

[1] ''Arnokrome III''' is a trademark of the Arnold Engineering Company.

[2] ''Gilphy 36'' is a trademark of Imphy, S.A.

[3] ''Durphynox 17'' is a trademark of Imphy, S.A.

[4] This list of uses is illustrative and provided for descriptive purposes only.

The third specialty steel has a chemical composition similar to AISI 420 F, with carbon of between 0.37 and 0.43 percent, molybdenum of between 1.15 and 1.35 percent, but lower manganese of between 0.20 and 0.80 percent, phosphorus of no more than 0.025 percent, silicon of between 0.20 and 0.50 percent, and sulfur of no more than 0.020 percent. This product is supplied with a hardness of more than Hv 500 guaranteed after customer processing, and is supplied as, for example, ''GIN6.''[5]

Analysis of Comments Received

All issues raised in the case and rebuttal briefs by parties to this administrative review are addressed in the ''Issues and Decision Memorandum'' (Decision Memorandum) from Joseph A. Spetrini, Deputy Assistant Secretary for Import Administration to Faryar Shirzad, Assistant Secretary for Import Administration, dated February 11, 2002, which is hereby adopted by this notice. A list of the issues which parties have raised and to which we have responded, all of which are in the Decision Memorandum, is attached to this notice as an appendix. Parties can find a complete discussion of all issues raised in this review and the corresponding recommendations in this public memorandum which is on file in room B–099 of the main Department of Commerce building. In addition, a complete version of the Decision Memorandum can be accessed directly on the internet at www.ia.ita.doc.gov. The paper copy and electronic version of the Decision Memorandum are identical in content.

Changes Since the Preliminary Results

Based on our analysis of comments received, we have made changes in the margin calculations. The changes are listed below:

• We modified our adjustment of affiliated party inputs from the preliminary results and, for these final results, we are comparing the prices of nickel metal on a monthly basis.
• We have deducted indirect selling expenses incurred in the country of manufacture from U.S. price and in our calculation of CEP profit to account for all U.S. selling expenses.
• We have also corrected certain programming and clerical errors in our preliminary results, where applicable. Any alleged programming or errors with which we do not agree are discussed in the relevent sections of the Decision Memorandum, accessible in B–099 of the main Department of Commerce building and on the web at www.ia.ita.doc.gov.

Final Results of the Review

We determine the following percentage weighted–average margins exist for the period January 4, 1999 through June 30, 2000:

Manufacturer/ Exporter	Weighted Average Margin (percentage)
KTN	2.61

Liquidation

The Department shall determine, and U.S. Customs Service (Customs) shall assess, antidumping duties on all appropriate entries. In accordance with 19 CFR 351.212(b), we have calculated exporter/importer–specific assessment rates. With respect to constructed export price sales, we divided the total dumping margins for the reviewed sales by the the total entered value of thosed reviewed sales for each importer. We will direct Customs to assess the resulting percentage margin against the entered Customs values for the subject merchandise on each of the importer's entries under the relevant order during the POR.

Cash Deposit Requirements

The following deposit requirements will be effective upon publication of this notice of final results of administrative review for all shipments of stainless steel sheet and strip in coils from Germany entered, or withdrawn from warehouse, for consumption on or after the date of publication, as provided by section 751(a)(1) of the Tariff Act: (1) The cash deposit rate for the reviewed company will be the rate shown above; (2) for previously reviewed or investigated companies not listed above, the cash deposit rate will continue to be the company–specific rate published for the most recent period; (3) if the exporter is not a firm covered in this review, a prior review, or the original less–than–fair–value (LTFV) investigation, but the manufacturer is, the cash deposit rate will be the rate established for the most recent period for the manufacturer of the merchandise; and (4) the cash deposit rate for all other manufacturers or exporters will continue to be 13.48 percent. This rate is the ''All Others'' rate from the amended final determination in the LTFV investigations. See Stainless Steel Sheet and Strip in Coils From Germany: Notice of Court Decision and Suspension of Liquidation, 66 FR 57419 (November 15, 2001).

These deposit requirements shall remain in effect until publication of the final results of the next administrative review.

This notice also serves as a final reminder to importers of their responsibility under 19 CFR 351.402(f) to file a certificate regarding the reimbursement of antidumping or countervailing duties prior to liquidation of the relevant entries during this review period. Failure to comply with this requirement could result in the Secretary's presumption that reimbursement of antidumping or countervailing duties occurred and the subsequent assessment of doubled antidumping duties.

This notice also serves as a reminder to parties subject to administrative protective orders (APO) of their responsibility concerning the return or destruction of proprietary information disclosed under APO in accordance with 19 CFR 351.305. Timely written notification of the return or destruction of APO materials or conversion to judicial protective order is hereby requested. Failure to comply with the regulations and terms of an APO is a violation which is subject to sanction.

We are issuing and publishing this determination and notice in accordance with sections 751(a)(1) and 777(i) of the Tariff Act.

February 11, 2002

Faryar Shirzad,

Assistant Secretary for Import Administration.

APPENDIX

Comments and Responses

1.Use of Affiliated–Party Sales
2.Nickel Costs
3.Interest Expenses and Indirect Selling Expenses
4.Deduction of Home Market Indirect Selling Expenses from CEP
5.Clerical Errors

[FR Doc. 02–4088 Filed 2–19–02; 8:45 am]

BILLING CODE 3510–DS–S

[5] ''GIN4 Mo,'' ''GIN5' and ''GIN6' are the proprietary grades of Hitachi Metals America, Ltd.

DEPARTMENT OF COMMERCE

National Institute of Standards and Technology

Visiting Committee on Advanced Technology Meeting

ACTION: Notice of partially closed meeting—Visiting Committee on Advanced Technology.

SUMMARY: Pursuant to the Federal Advisory Committee Act, 5 U.S.C. app. 2, notice is hereby given that the Visiting Committee on Advanced

Technology, National Institute of Standards and Technology (NIST), will meet Tuesday, March 5, 2002, from 8:25 a.m. to 5:15 p.m. and Wednesday, March 6, 2002, from 8:15 a.m. to Noon. The Visiting Committee on Advanced Technology is composed of fourteen members appointed by the Director of NIST; who are eminent in such fields as business, research, new product development, engineering, labor, education, management consulting, environment, and international relations. The purpose of this meeting is to review and make recommendations regarding general policy for the Institute, its organization, its budget, and its programs within the framework of applicable national policies as set forth by the President and the Congress. The agenda will include a NIST Update, Grand Challenges—NIST 2010, ATP: Reforms to Strengthen the Program, Environmental Health and Safety at NIST, An Update on the National Quality Program, MSEL Cross-Cutting Interactions, and Human Resource Development. Discussions scheduled to begin at 3:45 p.m. end at 5:15 p.m. on March 5, 2002, and to begin at 8:15 a.m. and to end at Noon on March 6, 2002, on staffing of management positions at NIST, the NIST budget, including funding levels of the Advanced Technology Program and the Manufacturing Extension Partnership, and feedback sessions will be closed.

DATES: The meeting will convene March 5, 2002 at 8:25 a.m. and will adjourn at Noon on March 6, 2002.

ADDRESSES: The meeting will be held in the Employees Lounge, Administration Building, at NIST, Gaithersburg, Maryland.

FOR FURTHER INFORMATION CONTACT: Janet R. Russell, Administrative Coordinator, Visiting Committee on Advanced Technology, National Institute of Standards and Technology, Gaithersburg, MD 20899–1004, telephone number (301) 975–2107.

SUPPLEMENTARY INFORMATION: The Assistant Secretary for Administration, with the concurrence of the General Counsel, formally determined on January 16, 2002, that portions of the meeting of the Visiting Committee on Advanced Technology which involve discussion of proposed funding of the Advanced Technology Program and the Manufacturing Extension Partnership Program may be closed in accordance with 5 U.S.C. 552b(c)(9)(B), because those portions of the meetings will divulge matters the premature disclosure of which would be likely to significantly frustrate implementation of proposed agency actions; and that portions of meetings which involve discussion of the staffing issues of management and other positions at NIST may be closed in accordance with 5 U.S.C. 552b(c)(6), because divulging information discussed in those portions of the meetings is likely to reveal information of a personal nature where disclosure would constitute a clearly unwarranted invasion of personal privacy.

Dated: February 11, 2002.

Karen H. Brown,

Deputy Director.

[FR Doc. 02–4073 Filed 2–19–02; 8:45 am]

BILLING CODE 3510–CN–P

DEPARTMENT OF COMMERCE

National Institute of Standards and Technology

Announcing a Meeting of the Computer System Security And Privacy Advisory Board

AGENCY: National Institute of Standards and Technology, Commerce.

ACTION: Notice of meeting.

SUMMARY: Pursuant to the Federal Advisory Committee Act, 5 U.S.C. App., notice is hereby given that the Computer System Security and Privacy Advisory Board (CSSPAB) will meet Tuesday, March 5, 2002, from 9 a.m. until 5 p.m., Wednesday, March 6, 2002, from 9 a.m. until 5 p.m. and on Thursday, March 7, 2002, from 9 a.m. until 5 p.m. All sessions will be open to the public. The Advisory Board was established by the Computer Security Act of 1987 (Pub. L. 100–235) to advise the Secretary of Commerce and the Director of NIST on security and privacy issues pertaining to federal computer systems. Details regarding the Board's activities are available at *http://csrc.nist.gov/csspab/*.

DATES: The meetings will be held on March 5, 6, and 7, 2002, from 9 a.m. until 5 p.m.

ADDRESSES: The meetings will take place at the General Services Administration, 7th and D Streets, SW., Room 5700, in Washington, DC.

Agenda

—Welcome and Overview
—Session on Minimally-Accepted Security Controls
—Updates on Recent Computer Security Legislation
—Update by OMB on Privacy and Security Issues
—Briefing on Activities Related to Executive Order on Critical Infrastructure Protection
—Briefing on U.S. Postal Service Electronic Postmark Products and Certificate Authority Effort
—Review of CSSPAB Work Plan Priorities for 2002 and Beyond
—Public Participation
—Agenda Development for June 2002 CSSPAB meeting
—Wrap-Up

Note that agenda items may change without notice because of possible unexpected schedule conflicts of presenters.

Public Participation

The Board agenda will include a period of time, not to exceed thirty minutes, for oral comments and questions from the public. Each speaker will be limited to five minutes. Members of the public who are interested in speaking are asked to contact the Board Secretariat at the telephone number indicated below. In addition, written statements are invited and may be submitted to the Board at any time. Written statements should be directed to the CSSPAB Secretariat, Information Technology Laboratory, 100 Bureau Drive, Stop 8930, National Institute of Standards and Technology, Gaithersburg, MD 20899–8930. It would be appreciated if 35 copies of written material were submitted for distribution to the Board and attendees no later than March 1, 2002. Approximately 15 seats will be available for the public and media.

FOR FURTHER INFORMATION CONTACT: Dr. Fran Nielsen, Board Secretariat, Information Technology Laboratory, National Institute of Standards and Technology, 100 Bureau Drive, Stop 8930, Gaithersburg, MD 20899–8930, telephone: (301) 975–3669.

Dated: February 14, 2002.

Karen H. Brown,

Acting Director, NIST.

[FR Doc. 02–4075 Filed 2–19–02; 8:45 am]

BILLING CODE 3510–CN–P

DEPARTMENT OF COMMERCE

National Institute of Standards and Technology

International Code Council: The Update Process for the International Codes and Standards

AGENCY: National Institute of Standards and Technology, Commerce.

ACTION: Notice.

SUMMARY: The International Code Council (ICC), promulgator of the International Codes and Standards, maintains a process for updating the entire family of International Codes

based on receipt of proposals from interested individuals and organizations involved in the construction industry as well as the general public. The codes are updated every three years (2000—current edition, 2003, 2006 editions, etc.) with an intervening Supplement published every 18 months. There are two hearings for each code development cycle: In the first, a committee considers proposals and recommends an action on each; in the second, the committee considers comments submitted in response to the committee actions. The schedule is printed below.

The purpose of this request is to increase public participation in the system used by ICC to develop and maintain its codes and standards. The publication of this notice by the National Institute of Standards and Technology (NIST) on behalf of ICC is undertaken as a public service; NIST does not necessarily endorse, approve, or recommend any of the codes or standards referenced in the notice.

DATES: Interested persons may submit proposals to the ICC at the address shown below and may participate in the public debate concerning these matters. The hearing dates are as follows:

Cycle year	Submittal deadline	Public hearings
2002	November 15, 2001	First Hearing, April 8–19, 2002, Radisson Hotel Green Tree, Pittsburgh, PA 800–333–3333. Second Hearing, September 29–October 4, 2002, Fort Worth Convention Center, Fort Worth, TX.
Completion of this cycle results in the 2003 edition.		
2003	February 15, 2003	First Hearing, September 5–14, 2003, Opryland Hotel, Nashville, TN. Second Hearing, May, 2004, Date/Location TBD.
Completion of this cycle results in the 2004 Supplement.		
2004	August 15, 2004 (tentative)	First Hearing, February 21–March 2, 2005, Cincinnati Convention Center, Cincinnati, OH. Second Hearing, September, 2005, Date/Location TBD.

Completion of this cycle results in the 2006 edition. The 3-year cycle continues as noted above.

Updates to the schedule are posted on the ICC website at: *www.intlcode.org.*

FOR FURTHER INFORMATION CONTACT: Mike Pfeiffer, PE, Secretary, Code Development, 4051 West Flossmoor Road, Country Club Hills, IL 60478 Telephone 708/799–2300 Extension 338.

SUPPLEMENTARY INFORMATION:

Background

ICC produces the only family of Codes and Standards that are comprehensive, coordinated and necessary to regulate the built environment. Federal agencies frequently use these codes and standards as the basis for developing Federal regulations concerning new and existing construction. The Code Development Process is initiated when proposals from interested persons, supported by written data, views, or arguments are solicited and published in the Proposed Changes document. This document is distributed a minimum of 30 days in advance of the first hearing and serves as the agenda. At the first hearing, the ICC Code Development Committee considers testimony on every proposal and acts on them individually (Approval, Disapproval, or Approval as Modified). The results are published in a report entitled the Report of the Public Hearing, which identifies the disposition of each proposal and the reason for the committee's action. Anyone wishing to submit a comment on the committee's action, expressing support or opposition to the action, is provided the opportunity to do so. Comments received are published and distributed in a document called the Final Action Agenda, which serves as the agenda for the second hearing. Proposals that are approved at the second hearing are incorporated in either the Supplement or Edition, as applicable, with the next cycle starting with the submittal deadline for proposals. Proponents of proposals automatically receive a copy of all documents (Proposed Changes, Report of the Public Hearing and Final Action Agenda).

Interested parties also may request a copy, free of charge, from ICC headquarters at:

International Code Council, 5203 Leesburg Pike, Suite 600, Falls Church, VA 22041–3401 or download a copy from the ICC web site at *www.intlcode.org.*

The International Codes and Standards consist of the following:

International Building Code
ICC Electrical Code
International Energy Conservation Code
International Existing Building Code
International Fire Code
International Fuel Gas Code
International Mechanical Code
ICC Performance Code for Buildings and Facilities
International Plumbing Code
International Private Sewage Disposal Code
International Property Maintenance Code
International Residential Code
International Urban-Wildland Interface Code
International Zoning Code
ICC/ANSI A 117.1 Accessible and Usable Buildings and Facilities
ICC Standard on Bleachers, Folding and Telescopic Seating and Grandstands

The maintenance process for ICC Standards such as ICC/ANSI A 117.1 and the ICC Standard on Bleachers, Folding and Telescopic Seating and Grandstands follows a similar process of soliciting proposals, committee action, public comment and ultimately the update and publication of the standard.

Dated: February 14, 2002.

Karen Brown,

Deputy Director.

[FR Doc. 02–4074 Filed 2–19–02; 8:45 am]

BILLING CODE 3510–CN–P

DEPARTMENT OF DEFENSE

Department of the Air Force

Notice of Issuance of Record of Decision Regarding Expansion of the Land Area of the Existing Hardwood Air-to-Surface Gunnery Range

AGENCY: Department of the Air Force, DoD.

ACTION: Notice of Record of Decision.

SUMMARY: The Air Force issued a Record of Decision (ROD) on February 8, 2002, to expand the land area of the existing Hardwood Air-to-Surface Gunnery Range. The decision supports high altitude restricted military training airspace, low altitude restricted military training airspace to match the land expansion area, and increase aircraft utilization in existing military operations area airspace in order to enhance combat readiness training. The ROD was issued in accordance with the Council on Environmental Quality's National Environmental Policy Act (NEPA) Regulations (40 CFR 1505.2). The ROD is based on information, analysis, and public comment contained in the Final Environmental Impact Statement, ''Hardwood Range Expansion and Associated Airspace Actions,'' November 2000 (**Federal Register** Volume 65, Number 242: December 15, 2000 [Page 78484–78485].

FOR FURTHER INFORMATION CONTACT: Harry Knudsen (301) 836–6295.

Pamela D. Fitzgerald,

Air Force Federal Register Liaison Officer.

[FR Doc. 02–4021 Filed 2–19–02; 8:45 am]

BILLING CODE 5001–05–U

DEPARTMENT OF EDUCATION

President's Advisory Commission on Educational Excellence for Hispanic Americans

AGENCY: President's Advisory Commission on Educational Excellence for Hispanic Americans, Department of Education.

ACTION: Notice of meeting.

SUMMARY: This notice sets forth the schedule and proposed agenda of a forthcoming meeting of the President's Advisory Commission on Educational Excellence for Hispanic Americans (Commission). This notice also describes the functions of the Commission. Notice of this meeting is required under Section 10(a)(2) of the Federal Advisory Committee Act and is intended to notify the public of their opportunity to attend.

DATE AND TIME: Thursday, February 28, 2002, 9 a.m. to 12 p.m.

ADDRESSES: The Commission meeting will be held in Washington, DC, at The Mayflower Hotel located at 1127 Connecticut Avenue, NW., Washington, DC 20036.

FOR FURTHER INFORMATION CONTACT: Leslie Sanchez, Executive Director, or Adam Chavarria, Associate Director, White House Initiative on Educational Excellence for Hispanic Americans, 400 Maryland Ave., SW., Washington, DC 20202, (202) 401–1411.

SUPPLEMENTARY INFORMATION: The President's Advisory Commission on Educational Excellence for Hispanic Americans is established under Executive Order 13230 dated October 12, 2001. The Commission is established to provide advice to the Secretary of Education (Secretary) and issue reports to the President concerning: (a) The progress of Hispanic Americans in closing the academic achievement gap and attaining the goals established by the President's No Child Left Behind Act of 2002; (b) the development, monitoring, and coordination of Federal efforts to promote high-quality education for Hispanic Americans; (c) ways to increase parental, State and local, private sector, and community involvement in improving education; and (d) ways to maximize the effectiveness of Federal education initiatives within the Hispanic community.

Individuals who will need accommodations for a disability in order to attend the meeting (*i.e.* interpreting services, assistive listening devices, materials in alternative format) should notify Adam Chavarria at (202) 401–1411 by no later than February 25. We will attempt to meet requests after this date, but cannot guarantee availability of the requested accommodation. The meeting site is accessible to individuals with disabilities.

On Wednesday, February 27th, the Commission will be briefed on a number of topics including Executive Order 13230, the No Child Left Behind Act of 2002, and the Federal Advisory Committee Act (FACA). The Commission will also be sworn in at the White House. The Commission's meeting on Wednesday is not subject to FACA because the meeting involves the exchange of facts and information.

On Thursday, the Commission will meet in open session from 9 a.m. to noon. The Commission will be discussing and planning upcoming meetings and events.

Records are kept of all Commission proceedings, and are available for public inspection at the office of the White House Initiative on Educational Excellence for Hispanic Americans from the hours of 9 a.m. to 5 p.m. This notice will not meet the 15-day FACA requirement for announcing meetings in the **Federal Register** due to scheduling issues.

Dated: February 14, 2002.

Laurie M. Rich,

Assistant Secretary, Office of Intergovernmental and Interagency Affairs.

[FR Doc. 02–4078 Filed 2–19–02; 8:45 am]

BILLING CODE 4000–01–M

DEPARTMENT OF ENERGY

[Docket No. EA–258]

Application to Export Electric Energy; Maclaren Energy Inc.

AGENCY: Office of Fossil Energy, DOE.

ACTION: Notice of application.

SUMMARY: Maclaren Energy Inc. (Maclaren) has applied for authority to transmit electric energy from the United States to Canada pursuant to section 202(e) of the Federal Power Act.

DATES: Comments, protests or requests to intervene must be submitted on or before March 22, 2002.

ADDRESSES: Comments, protests or requests to intervene should be addressed as follows: Office of Coal & Power Import/Export (FE–27), Office of Fossil Energy, U.S. Department of Energy, 1000 Independence Avenue, SW., Washington, DC 20585–0350 (FAX 202–287–5736).

FOR FURTHER INFORMATION CONTACT: Steven Mintz (Program Office) 202–586–9506 or Michael Skinker (Program Attorney) 202–586–2793.

SUPPLEMENTARY INFORMATION: Exports of electricity from the United States to a foreign country are regulated and require authorization under section 202(e) of the Federal Power Act (FPA) (16 U.S.C. 824a(e)).

On January 22, 2002, the Office of Fossil Energy (FE) of the Department of Energy (DOE) received an application from Maclaren to transmit electric energy from the United States to Canada. Maclare is a power marketer that is incorporated under the laws of Canada and is a wholly-owned subsidiary of Great Lakes Power Inc., a Canadian corporation, which has its principal place of business in Toronto, Ontario, Canada. Maclaren operates as a wholesale and retail marketer of electric power and arranges services in related

areas. Maclaren does not own or control any electric power generation or transmission facilities and does not have a franchised service area.

Maclaren proposes to arrange for the delivery of electric energy to Canada over the existing international transmission facilities owned by Basin Electric Power Cooperative, Bonneville Power Administration, Citizen Utilities, Eastern Maine Electric Cooperative, International Transmission Company, Joint Owners of the Highgate Project, Long Sault, Inc., Maine Electric Power Company, Maine Public Service Company, Minnesota Power Inc., Minnkota Power Cooperative, New York Power Authority, Niagara Mohawk Power Corporation, Northern States Power, and Vermont Electric Transmission Company. The construction, operation, maintenance, and connection of each of the international transmission facilities to be utilized by Maclaren, as more fully described in the application, has previously been authorized by a Presidential permit issued pursuant to Executive Order 10485, as amended.

Procedural Matters

Any person desiring to become a party to this proceeding or to be heard by filing comments or protests to this application should file a petition to intervene, comment or protest at the address provided above in accordance with §§ 385.211 or 385.214 of the FERC's Rules of Practice and Procedures (18 CFR 385.211, 385.214). Fifteen copies of each petition and protest should be filed with DOE on or before the date listed above.

Comments on the Maclaren application to export electric energy to Canada should be clearly marked with Docket EA–258. Additional copies are to be filed directly with Ginette Berthel, Maclaren Energy Inc., Legal Counsel and Corporate Secretary, 2 Montreal Road West, Masson-Angers, Quebec J8M 1K6.

A final decision will be made on this application after the environmental impacts have been evaluated pursuant to the National Environmental Policy Act of 1969, and a determination is made by the DOE that the proposed action will not adversely impact on the reliability of the U.S. electric power supply system.

Copies of this application will be made available, upon request, for public inspection and copying at the address provided above or by accessing the Fossil Energy Home Page at *http://www.fe.de.gov.* Upon reaching the Fossil Energy Home page, select ''Electricity Regulation,'' and then ''Pending Procedures'' from the options menus.

Issued in Washington, D.C., on February 13, 2002.

Anthony J. Como,

Deputy Director, Electric Power Regulation, Office of Coal & Power Import/Export, Office of Coal & Power Systems, Office of Fossil Energy.

[FR Doc. 02–4050 Filed 2–19–02; 8:45 am]

BILLING CODE 6450–01–P

DEPARTMENT OF ENERGY

National Nuclear Security Administration; Notice of Floodplain/Wetlands Involvement for the Disposition of the Omega West Reactor Vessel and Ancillary Structures at Los Alamos National Laboratory, Los Alamos, New Mexico

AGENCY: National Nuclear Security Administration, Office of Los Alamos Site Operation, Department of Energy.

ACTION: Notice of Floodplain Involvement.

SUMMARY: The Department of Energy's National Nuclear Security Administration, Office of Los Alamos Site Operations hereby provides notice for its proposal to decontaminate and demolish the Omega West Reactor vessel along with the remaining structures associated with the Omega Facility, and to remove the resulting waste from the Los Alamos canyon floodplain and out of the canyon bottom. The Omega Facility, located in Los Alamos Canyon at LANL in New Mexico, housed an old research reactor known as the Omega West Reactor (OWR). The OWR was shut down in 1992 and the fuel removed in 1994. The Facility, originally constructed in 1944, and its associated structures are of advanced age and not in a condition suitable for renovation or reapplication. Further, they are located within a potential flood pathway. There is no foreseeable future use for the Facility, which is eligible for inclusion in the National Register of Historic Places.

DATES: Written comments are due to the address below no later than March 7, 2002.

ADDRESSES: Written comments should be addressed to Jeff Robbins, U.S. Department of Energy, National Nuclear Security Administration, Albuquerque Operations Office, P.O. Box 5400, Albuquerque, New Mexico, 87185 or transmitted by E-mail via Internet to *jfrobbins@doeal.gov,* or by facsimile to (505) 284–7101.

FOR FURTHER INFORMATION CONTACT: Rich Nevarez, Document Manager, U.S. Department of Energy, Albuquerque Operations Office, ERD SC–1, PO Box 5400, Albuquerque, New Mexico 87185, Telephone (505) 845–5804, or transmitted by E-mail via Internet to *rnevarez@doeal.gov,* or by facsimile (505) 845–4239.

For Further Information on General DOE Floodplain Environmental Review Requirements, Contact: Carol M. Borgstrom, Director, office of NEPA Policy and Compliance (EH–42), U.S. Department of Energy, 1000 Independence Avenue, SW, Washington, DC 20585–0119, Telephone (202) 586–4600 or (800) 472–2756, facsimile (202) 586–7031.

SUPPLEMENTARY INFORMATION: In May 2000, the Cerro Grande Fire burned across the upper and mid-elevation zones of several watersheds, including the Los Alamos Canyon watershed. Several of the Omega Facility's small support buildings and structures were demolished and disposed of during the first 6 months post Cerro Grande Fire. The remaining buildings, including Building 2–1 that houses the OWR vessel, and the associated structures and utilities and infrastructure, continue to be vulnerable to damage from flooding and mudflows as a result of the fire and the changed environmental conditions upstream from the Facility. While all buildings are vulnerable, the support buildings and structures are especially at risk due to their construction characteristics. An assessment of the floodplain is being included in the Disposition of the Omega West Vessel and Ancillary Structures Environmental Assessment (EA).

According to the requirements of E.O. 11988—Floodplain Management and 10 CFR part 1022—Compliance with Floodplain Environmental Review Requirements, notice is given that NNSA is planning to decontaminate and demolish (D&D) the OWR vessel and the remaining Omega Facility structures located within Los Alamos Canyon at Los Alamos National Laboratory, Los Alamos, New Mexico.

The D&D activities would consist of characterization and removal of radiological and other potential contamination in all the structures and subsequent demolition of the structures; dismantlement of the reactor vessel; segregation, size reduction, packaging, transportation, and disposal of wastes; and removal of several feet of potentially contaminated soil from beneath the reactor vessel. The D&D of the entire Omega Facility is proposed to be conducted using a phased approach. For each individual structure, the initial phase would include the

characterization and planning of the work, followed by the decontamination effort, and lastly the demolition of the structure and disposal of resulting debris. Decontamination of the Omega Facility would include the removal of nonradiological and radiological contamination from building and structure surfaces throughout the Omega Facility. The extent of decontamination performed would be limited to those activities required to minimize radiological and hazardous material exposure to workers, the public, and the environment. This would involve mostly decontamination of the Omega Facility, its components and spot contamination of surrounding areas, buildings and structure components.

Once the Omega Facility has been decontaminated, the buildings, structures, foundations, and other facility components would be demolished. All building and structural materials would be removed from the canyon and sent to appropriate disposal sites. The buildings are not expected to be technically difficult to demolish and the resultant wastes can be handled, transported, and disposed of in accordance with standard LANL D&D procedures. The demolition of the OWR vessel and its concrete radiation shielding would generate high exposure rates in the room as the vessel is dismantled. Therefore, a safe method of demolition would be employed that would assure the involved workers could maintain their exposure limits below one rem per year. The OWR vessel and radiation shielding would be horizontally sectioned using diamond wire saws or other similar equipment for cutting the structure. The result cut sections would be packaged as appropriate, transported out of the canyon for eventual disposal.

An assessment of the floodplain effects is being included in the draft EA for the proposed disposition of the OWR vessel and associated structures, which is under preparation. After NNSA issues the assessment, a floodplain statement of findings will be published in the **Federal Register**.

Issued in Los Alamos, New Mexico on February 4, 2002.

Corey A. Cruz,

Acting Director, U.S. Department of Energy, National Nuclear Security Administration, Office of Los Alamos Site Operations.

[FR Doc. 02–4045 Filed 2–19–02; 8:45 am]

BILLING CODE 6450–01–P

DEPARTMENT OF ENERGY

National Energy Technology Laboratory; Notice of Availability of a Financial Assistance Solicitation

AGENCY: National Energy Technology Laboratory, Department of Energy (DOE).

ACTION: Notice of Availability of a Financial Assistance Solicitation.

SUMMARY: Notice is hereby given of the intent to issue Financial Assistance Solicitation No. DE–PS26–02NT15373 entitled ''Focused Research in Air Quality and Produced Water Management in Oil and Gas Exploration and Production.'' The Department of Energy (DOE) National Energy Technology Laboratory (NETL), on behalf of its National Petroleum Technology Office (NPTO), seeks applications for cost-shared research projects that address specific air quality or produced water management issues faced by the oil and gas industry. Applications will either address (1) solutions to air quality issues in emission control technology, monitoring technology or air modeling or (2) produced water management issues in low cost treatment technologies, beneficial use of produced water, or best management practices for handling, treatment and/or disposal. The goal is to provide solutions to issues that are limiting domestic on-shore or off-shore production while providing the same or higher levels of environmental protection.

DATES: The solicitation will be available on the DOE/NETL's Internet address at http://www.netl.doe.gov/business and on the ''Industry Interactive Procurement System'' (IIPS) webpage located at *http://e-center.doe.gov* on or about February 28, 2002.

FOR FURTHER INFORMATION CONTACT: Keith R. Miles, U.S. Department of Energy, National Energy Technology Laboratory, P.O. Box 10940, MS 921–107, Pittsburgh, PA 15236, E-mail Address: miles@netl.doe.gov, Telephone Number: 412–386–5984.

SUPPLEMENTARY INFORMATION: The Department of Energy (DOE) National Energy Technology Laboratory (NETL), on behalf of its National Petroleum Technology Office (NPTO), is soliciting applications for cost-shared research projects that address specific air quality or produced water management issues faced by the oil and gas industry. The goal is to provide solutions to issues that are limiting domestic on-shore or off-shore production while providing the same or higher levels of environmental protection.

The mission of the Department of Energy's Fossil Energy Oil Program is derived from the National need for increased oil production for national security, requirements for Federal Lands stewardship, and increased protection of the environment. The Oil and Gas Environmental Program supports those goals and the National Energy Policy goal of increasing domestic oil and gas production, by providing technologies and approaches that reduce the cost of effective environmental protection and by providing technologies and approaches that improve environmental protection.

The two areas of interest for this solicitation are:

(1) Air Quality

This area of interest is directed toward providing better tools to meet existing requirements as well as providing a more accurate assessment of the impacts of oil and gas activities on regional air quality. Applications in this area should address emissions control technologies for oil and gas E&P activities or address monitoring and modeling improvements that will provide more accurate assessments and predictions of the impacts of both current and future oil and gas activities on regional air quality. Applications in this area of interest should clearly demonstrate that the results of the project meet current legal and regulatory requirements or that the appropriate government agencies are appropriately involved with the project and support the project goals.

(2) Produced Water

This area of interest is directed toward reducing the cost of produced water management. Applications in this area should address lower cost treatment processes, economic beneficial use of produced water, or best management practices that reduce the overall cost of produced water handling. All applications should clearly describe how a successful project will result in cost savings to operators and the magnitude of those savings. Applications addressing beneficial use of produced water may address treatment technologies designed to meet certain use criteria or may address ecological and/or regulatory concerns that limit producers' options for managing produced water. If implementation of the results of the project are dependent upon approval or concurrence of one or more regulatory agencies, applications should clearly demonstrate that such agencies are appropriately involved with the project and support the project goals.

The goal of this solicitation is to provide solutions to issues that are limiting domestic on-shore or off-shore production while providing the same or higher levels of environmental protection. These air quality and produced water management issues are limiting domestic production by restricting additional development or by adding costs that cause operators to abandon existing wells while substantial recoverable reserves remain in the ground.

The issues listed above are multi-faceted problems. In many cases, the overall solution may vary by region or may require several separate steps to resolve completely. Selected projects are expected to describe the overall problem and the region or regions affected as well as describing how the proposed project fits into the overall solution. Selected projects are also expected to describe as completely as possible the impact that the project will have on increasing or maintaining domestic production. The description of the production impact should discuss in detail the resource affected and the amount of domestic production that can be added or maintained as a result of the successful completion of the project.

DOE anticipates awarding approximately three (3) to seven (7) financial assistance (i.e., Cooperative Agreements) with a project performance period no less than one year in length and up to three years in length. Approximately $7.0 million of DOE funding is planned over a 3-year period for this solicitation. DOE has determined the minimum cost share of twenty percent (20%) of the total estimated project cost is required; details of the cost sharing requirement and the specific funding levels will be contained in the program solicitation.

This solicitation will be targeted for unrestricted competition. However, applications submitted by or on behalf of (1) another Federal agency; (2) a Federally Funded Research and Development Center sponsored by another Federal agency; or (3) a Department of Energy (DOE) Management Operating (M&O) contractor will not be eligible for award under this solicitation. However, an application that includes performance of a portion of the work by a DOE M&O contractor will be evaluated and may be considered for award subject to the provisions to be set forth in Program Solicitation DE–PS26–02NT15373.

Note: The limit on participation by an M&O contractor for an individual project under this solicitation cannot exceed 25% of the total project cost.

Once released, the solicitation will be available for downloading from the IIPS Internet page. At this Internet site you will also be able to register with IIPS, enabling you to submit an application. If you need technical assistance in registering or for any other IIPS function, call the IIPS Help Desk at (800) 683–0751 or E-mail the Help Desk personnel at *IIPS—HelpDesk@e-center.doe.gov.* The solicitation will only be made available in IIPS, no hard (paper) copies of the solicitation and related documents will be made available.

Prospective applicants who would like to be notified as soon as the solicitation is available should subscribe to the Business Alert Mailing List at http://www.netl.doe.gov/business. Once you subscribe, you will receive an announcement by E-mail that the solicitation has been released to the public. Telephone requests, written requests, E-mail requests, or facsimile requests for a copy of the solicitation package will not be accepted and/or honored. Applications must be prepared and submitted in accordance with the instructions and forms contained in the solicitation. The actual solicitation document will allow for requests for explanation and/or interpretation.

Issued in Pittsburgh, PA on February 5, 2002.

Dale A. Siciliano,

Deputy Director, Acquisition and Assistance Division.

[FR Doc. 02–4044 Filed 2–19–02; 8:45 am]

BILLING CODE 6450–01–P

DEPARTMENT OF ENERGY

[Number DE–PS36–02GO92005]

Million Solar Roofs Initiative Small Grant Program For State And Local Partnerships

AGENCY: Golden Field Office, Department of Energy.

ACTION: Notice of issuance of solicitation for financial assistance applications.

SUMMARY: The U.S. Department of Energy (DOE), pursuant to the DOE Financial Assistance Rules, 10 CFR 600.8, is announcing its intention to solicit applications from State and Local Partnerships under the Million Solar Roofs (MSR) Program. DOE's Office of Energy Efficiency and Renewable Energy will consider proposals from interested State and Local Partnerships to help fund their MSR program development and implementation activities. Applications from State Partnerships are encouraged to apply under the MSR Small Grant Program for State Partnerships. For information on the MSR Small Grant Program for State Partnerships, refer to the State Energy Programs Solicitation for Fiscal Year 2002 Special Projects at *http://www.eren.doe.gov/buildings/state_energy/corner_cafe/special_projects.html.* The MSR Small Grant Program for State Partnerships is Section 6.57 of the downloadable PDF Special Projects Solicitation.

DATES: The solicitation will be issued mid February 2002.

ADDRESSES: A copy of the solicitation will be accessible through the Golden Field Office Home Page at *http://www.golden.doe.gov/businessopportunities.html* under ''Solicitations.'' The Golden Home Page will provide direct access to the solicitation and provide instructions on using the DOE Industry Interactive Procurement System (IIPS) web site. The solicitation can also be obtained directly through IIPS at *http://e-center.doe.gov/* by browsing opportunities by Program Office for those solicitations issued by the Golden Field Office. DOE will not issue hard copies of the solicitation.

FOR FURTHER INFORMATION CONTACT: James McDermott, Contract Specialist, at 303–275–4732 or electronically at *jim_mcdermott@nrel.gov.* Responses to questions will be made by Amendment to the Solicitation and posted on the DOE IIPS website.

SUPPLEMENTARY INFORMATION: The Department of Energy's MSR Initiative is an initiative to support State and Local Partnerships who agree to install solar energy systems on one million buildings in the United States (U.S.) by 2010. This effort includes two types of solar energy technology: (1) solar electric (photovoltaic) systems that produce electricity from sunlight, and (2) solar thermal systems panels that produce heat for domestic hot water, for space heating or for heating swimming pools. The Partnerships bring together business, government and community organizations at the regional level with a commitment to install a pre-determined number (at least 500) of solar energy systems.

There were fifty-seven such existing partnerships under the MSR Initiative, as of October 1, 2001. They received their MSR Partnership designation by writing a letter of commitment to DOE with their goal for actual installations by 2010. In return, DOE provides access to: training and technical assistance from DOE; recognition, outreach tools, support; and opportunities to interface with other partnerships, solar energy

businesses, associations and related industries that can provide assistance (via national and regional Million Solar Roofs meetings). New MSR Partnerships can declare their intent to join the Initiative by including such a letter with their application for this solicitation. A complete description of partnerships and their representative activities can be found on the MSR website at *http://www.MillionSolarRoofs.org.*

Applications under the solicitation must further the work of State and Local Partnerships, including partners in the building industry, state and local governments, utilities, the solar energy industry, financial institutions and non-governmental organizations, to remove market barriers to solar energy use and to develop and strengthen local demand for solar energy products and applications. There are two types of grants available: Phase 1—New Partnership grants, and Phase 2—Meeting the Commitment grants. Only one application may be submitted per partnership in one or the other of the categories, but not both. Partnerships that have been awarded prior MSR partnership grants in the past may not apply for a Phase 1—New Partnership grant. Newly formed or existing partnerships that have not received prior MSR grants may apply for a Phase 1—New Partnership grant. Any partnership with the prerequisites may apply for a Phase 2—Meeting the Commitment grant.

The project or activity must be conducted in a designated MSR State and Local Partnership area. There is no cost sharing requirement for these grants, although cost sharing will be one of the criteria considered. Subject to the availability of funds, multiple awards for a total of $1,000,000 (DOE funding) in Fiscal Year 2002 are anticipated as a result of this Solicitation. The selected applicants will receive financial assistance under a grant. DOE will fund up to $50,000 per project. DOE anticipates funding approximately 20 to 30 grants in the amount of $10,000 to $50,000 each.

Solicitation number DE–PS36–02GO92005 will include complete information on the program, including technical aspects, funding, application preparation instructions, application evaluation criteria, and other factors that will be considered when selecting applications for funding. No pre-application conference is planned. Issuance of the solicitation is planned for mid February 2002, with applications due 45 days after the solicitation has been issued.

Issued in Golden, Colorado, on February 11, 2002.

Jerry L. Zimmer,

Director, Office of Acquisition and Financial Assistance.

[FR Doc. 02–4046 Filed 2–19–02; 8:45 am]

BILLING CODE 6450–01–P

DEPARTMENT OF ENERGY

[Number DE–PS36–02GO92006]

Renewable Energy Development On Tribal Lands

AGENCY: Golden Field Office, Department of Energy.

ACTION: Notice of issuance of solicitation for financial assistance applications.

SUMMARY: The U.S. Department of Energy (DOE), pursuant to the DOE Financial Assistance Rules, 10 CFR 600.8, is announcing its intention to solicit applications for the development of renewable energy on Tribal lands. Through cooperative agreements, DOE intends to provide financial support to conduct feasibility studies and share in the cost of implementing sustainable renewable energy installations on Tribal lands. Under the solicitation, DOE is soliciting Applications from Federally-recognized Tribes or Alaskan Native Corporations (hereafter referred to as ''Tribes'') to either: (1) conduct feasibility studies for the development of economically sustainable renewable energy installations on Tribal Lands; or (2) implement sustainable renewable energy development projects.

DATES: Issuance of the solicitation is planned for the end of February 2002.

ADDRESSES: A copy of the solicitation, once it is issued, will be accessible through the Golden Field Office Home Page at *http://www.golden.doe.gov/businessopportunities.html* under ''Solicitations.'' The Golden Home Page will provide direct access to the solicitation and provide instructions on using the DOE Industry Interactive Procurement System (IIPS) Web site. The solicitation can also be obtained directly through IIPS at http://e-center.doe.gov/ by browsing opportunities by Program Office for those solicitations issued by the Golden Field Office. DOE will not issue hard copies of the solicitation.

FOR FURTHER INFORMATION CONTACT: Ruth E. Adams, Contracting Officer, via facsimile at 303–275–4788 or electronically at *ruth_adams@nrel.gov.* Responses to questions will be made by amendment to the solicitation and posted on the DOE Industry Interactive Procurement System (IIPS) Web site.

SUPPLEMENTARY INFORMATION: DOE's Tribal Energy Program promotes tribal energy self-sufficiency and fosters employment and economic development on Tribal Lands through financial assistance to Native American Tribes and Alaskan Native Corporations for feasibility studies and renewable energy development projects. Under this solicitation, DOE will be soliciting Applications from Federally-recognized Tribes or Alaskan Native Corporations (hereafter referred to as ''Tribes'') to either: (1) conduct feasibility studies for the development of economically sustainable renewable energy installations on Tribal Lands; or (2) implement sustainable renewable energy development projects.

Eligible technologies under this solicitation include, but are not limited to the following: photovoltaic, concentrating solar power, solar thermal systems (*i.e.,* active or passive solar technologies for space or water heating, or power generation technologies), wind, biomass power, hydro, geothermal electric generation, geothermal resources for direct heating applications, and other renewable hybrid systems. Applications may include, but are not limited to, the use of renewable energy for: direct electrical generation, building uses, water pumping, or other grid connected or off-grid power uses.

DOE will only consider Applications from Federally-recognized Tribes on whose Tribal Lands the project will be located. Applications from a consortium of Tribes will be accepted but must be submitted by a single Tribe representing the consortium. A letter of commitment from an authorized representative of the Tribe (Chief, Governor, President, Chairperson or other representative able to commit the Tribe), as well as from each participating Tribe or project Participant, is required as a part of the Application. For Development Project Applications, a Tribal Council Resolution is preferable to a letter of commitment, but a letter of commitment accompanied by a plan and schedule to obtain a Resolution, will be accepted.

Awards under this solicitation will be cooperative agreements with terms of one to three years depending on the type and scope of the proposed project. Subject to funding availability, the total DOE funding available under this solicitation will be approximately $2,500,000. DOE anticipates selecting 10 to 15 Renewable Energy Feasibility Study Applications and 3 to 5 Renewable Energy Development Project Applications for negotiation toward Award. If funding is appropriated in the Government's Fiscal Year 2003 (October

1, 2002 through September 30, 2003), opportunities to apply for development projects as well as funding for additional feasibility studies will be provided.

No cost share is required in order to be considered for feasibility study awards under this solicitation. For development projects, a minimum cost share of 20% of total project costs is required to be considered for award. However, applicants that propose more than the required cost share will be given additional consideration in the selection process. All applicant cost sharing must come from non-Federal sources (*i.e.,* private, state or local Government, or any other sources that were not originally derived from Federal funds).

A pre-application conference will be held on March 20, 2002 from 8:00 a.m. to 12:00 noon at the Red Lion Hotel Denver Central, 4040 Quebec Street, Denver, Colorado 80216. For responses at the Pre-Application conference, potential Applicants should submit questions in writing by March 12, 2002. The solicitation will provide information on how to transmit questions. All interested parties are encouraged to attend the pre-application conference. To confirm your participation or obtain additional information, please contact the Solicitation Coordinator at (303) 275–4716 or via facsimile at (303) 275–4788. The pre-application conference is being held in conjunction with the Council of Energy Resource Tribes (CERT) Sustainability Conference. For additional information on the CERT Sustainability Conference to be held March 21–22, 2002 visit *http://www.certredearth.com/.*

Solicitation number DE–PS36–02GO92006 will include complete information including technical aspects, funding, application preparation instructions, evaluation criteria, and other factors that will be considered when selecting applications for funding. Issuance of the solicitation is planned for the end of February 2002, with applications due approximately 70 days after the solicitation has been issued.

Issued in Golden, Colorado, on February 11, 2002.

Jerry L. Zimmer,

Director, Office of Acquisition and Financial Assistance.

[FR Doc. 02–4047 Filed 2–19–02; 8:45 am]

BILLING CODE 6450–01–P

DEPARTMENT OF ENERGY

Office of Science Financial Assistance Program Notice 02–17: Fusion 2002 Summer Study, Snowmass Village, CO, Supplemental Travel Funding

AGENCY: U.S. Department of Energy (DOE).

ACTION: Correction.

In notice document 02–2712 on page 5277, in the issue of Tuesday, February 5, 2002, please make the following corrections:

On page 5277, in the first column, under the heading ''Summary'', in the last line (line 15) the dollar amount should read $200,000.

The Web sites for the Fusion 2002 Summer Study and the Snowmass working groups have both changed. On page 5277, under the heading ''Supplementary Information'', in the second column, at the end of the second full paragraph (line 18) the Web site address should read *http://web.gat.com/snowmass/.* Also under the same heading, second column, third full paragraph, on line 13 the Web site should read *http://web.gat.com/snowmass/working/.*

Issued in Washington, DC on February 11, 2002.

John Rodney Clark,

Associate Director of Science for Resource Management.

[FR Doc. 02–4048 Filed 2–19–02; 8:45 am]

BILLING CODE 6450–02–P

DEPARTMENT OF ENERGY

Environmental Management Site-Specific Advisory Board, Rocky Flats

AGENCY: Department of Energy.

ACTION: Notice of open meeting.

SUMMARY: This notice announces a meeting of the Environmental Management Site-Specific Advisory Board (EM SSAB), Rocky Flats. The Federal Advisory Committee Act (Pub. L. 92–463, 86 Stat. 770) requires that public notice of these meeting be announced in the **Federal Register**.

DATES: Thursday, March 7, 2002, 6 p.m. to 9:30 p.m.

ADDRESSES: Jefferson County Airport Terminal Building, Mount Evans Room, 11755 Airport Way, Broomfield, CO.

FOR FURTHER INFORMATION CONTACT: Ken Korkia, Board/Staff Coordinator, Rocky Flats Citizens Advisory Board, 9035 North Wadsworth Parkway, Suite 2250, Westminster, CO, 80021; telephone (303) 420–7855; fax (303) 420–7579.

SUPPLEMENTARY INFORMATION: *Purpose of the Board:* The purpose of the Board is to make recommendations to DOE and its regulators in the areas of environmental restoration, waste management, and related activities.

Tentative Agenda

1. Quarterly update by representative from the Defense Nuclear Facilities Safety Board

2. Introduction to basic Rocky Flats site geology and hydrology

3. Presentation and discussion on surface soil and surface water contamination

4. Consideration of SSAB Groundwater Workshop final statements

5. Other Board business may be conducted as necessary

Public Participation: The meeting is open to the public. Written statements may be filed with the Board either before or after the meeting. Individuals who wish to make oral statements pertaining to agenda items should contact Ken Korkia at the address or telephone number listed above. Requests must be received at least five days prior to the meeting and reasonable provisions will be made to include the presentation in the agenda. The Deputy Designated Federal Officer is empowered to conduct the meeting in a fashion that will facilitate the orderly conduct of business. Each individual wishing to make public comment will be provided a maximum of five minutes to present their comments.

Minutes: The minutes of this meeting will be available for public review and copying at the Public Reading Room located at the Office of the Rocky Flats Citizens Advisory Board, 9035 North Wadsworth Parkway, Suite 2250, Westminister, CO 80021; telephone (303) 420–7855. Hours of operations for the Public Reading Room are 9 a.m. to 4 p.m., Monday–Friday, except Federal holidays. Minutes will also be made available by writing or calling Deb Thompson at the address or telephone number listed above.

Issued at Washington, DC on February 14, 2002.

Rachel M. Samuel,

Deputy Advisory Committee Management Officer.

[FR Doc. 02–4049 Filed 2–19–02; 8:45 am]

BILLING CODE 6450–01–P

DEPARTMENT OF ENERGY

Federal Energy Regulatory Commission

[Docket No. RP96–190–017]

Colorado Interstate Gas Company; Notice of Annual Revenue Report

February 13, 2002.

Take notice that on February 7, 2002, Colorado Interstate Gas Company (CIG) tendered for filing its final report detailing all negotiated rate revenues and interruptible storage revenue credits distributed for the period October 1, 2000 through September 30, 2001.

CIG states that copies of the filing has been served upon each person designated on the official service list compiled by the Commission's Secretary in this proceeding.

Any person desiring to protest said filing should file a protest with the Federal Energy Regulatory Commission, 888 First Street, NE, Washington, DC 20426, in accordance with section 385.211 of the Commission's Rules and Regulations. All such protests must be filed on or before February 20, 2002. Protests will be considered by the Commission in determining the appropriate action to be taken, but will not serve to make protestants parties to the proceedings. Copies of this filing are on file with the Commission and are available for public inspection. This filing may also be viewed on the Web at *http://www.ferc.gov* using the ''RIMS'' link, select ''Docket#'' and follow the instructions (call 202–208–2222 for assistance). Comments, protests and interventions may be filed electronically via the Internet in lieu of paper. See, 18 CFR 385.2001(a)(1)(iii) and the instructions on the Commission's Web site under the ''e-Filing'' link.

Linwood A. Watson, Jr.,

Deputy Secretary.

[FR Doc. 02–4039 Filed 2–19–02; 8:45 am]

BILLING CODE 6717–01–P

DEPARTMENT OF ENERGY

Federal Energy Regulatory Commission

[Docket No. ER01–2104–000, ER01–2104–001]

Maclaren Energy, Inc.; Notice of Issuance of Order

February 13, 2002.

Maclaren Energy, Inc. (Maclaren) submitted for filing a rate schedule under which Maclaren will engage in wholesale electric power and energy transactions at market-based rates. Maclaren also requested waiver of various Commission regulations. In particular, Maclaren requested that the Commission grant blanket approval under 18 CFR part 34 of all future issuances of securities and assumptions of liability by Maclaren.

On August 27, 2001, pursuant to delegated authority, the Director, Office of Markets, Tariffs and Rates-East, granted requests for blanket approval under Part 34, subject to the following:

Any person desiring to be heard or to protest the blanket approval of issuances of securities or assumptions of liability by Maclaren should file a motion to intervene or protest with the Federal Energy Regulatory Commission, 888 First Street, NE, Washington, DC 20426, in accordance with Rules 211 and 214 of the Commission's Rules of Practice and Procedure (18 CFR 385.211 and 385.214).

Absent a request to be heard in opposition within this period, Maclaren is authorized to issue securities and assume obligations or liabilities as a guarantor, indorser, surety, or otherwise in respect of any security of another person; provided that such issuance or assumption is for some lawful object within the corporate purposes of Maclaren, compatible with the public interest, and is reasonably necessary or appropriate for such purposes.

The Commission reserves the right to require a further showing that neither public nor private interests will be adversely affected by continued approval of Maclaren's issuances of securities or assumptions of liability.

Notice is hereby given that the deadline for filing motions to intervene or protests, as set forth above, is February 25, 2002.

Copies of the full text of the Order are available from the Commission's Public Reference Branch, 888 First Street, NE, Washington, DC 20426. The Order may also be viewed on the Internet at *http://www.ferc.fed.us/online/rims.htm* (call 202–208–2222 for assistance). Comments, protests, and interventions may be filed electronically via the Internet in lieu of paper. See, 18 CFR 385.2001(a)(1)(iii) and the instructions on the Commission's Web site at *http://www.ferc.fed.us/efi/doorbell.htm.*

Magalie R. Salas,

Secretary.

[FR Doc. 02–4036 Filed 2–19–02; 8:45 am]

BILLING CODE 6717–01–P

DEPARTMENT OF ENERGY

Federal Energy Regulatory Commission

[Docket No. RP02–152–001]

Mississippi River Transmission Corporation; Notice of Proposed Changes in FERC Gas Tariff

February 13, 2002.

Take notice that on February 7, 2002, Mississippi River Transmission Corporation (MRT) tendered for filing as part of its FERC Gas Tariff, Fifth Revised Volume No. 1, the following revised tariff sheets to be effective as follows:

To be effective October 1, 2001

Substitute Fifteenth Revised Sheet No. 8

To be effective November 1, 2001

Sixteenth Revised Sheet No. 8

MRT states that the purpose of this filing is to correct an administrative error and reflect the correct storage Fuel Use and Loss Percentage effective on October 1, 2001 and November 1, 2001.

Any person desiring to protest said filing should file a protest with the Federal Energy Regulatory Commission, 888 First Street, NE, Washington, DC 20426, in accordance with Section 385.211 of the Commission's Rules and Regulations. All such protests must be filed in accordance with Section 154.210 of the Commission's Regulations. Protests will be considered by the Commission in determining the appropriate action to be taken, but will not serve to make protestants parties to the proceedings. Copies of this filing are on file with the Commission and are available for public inspection. This filing may also be viewed on the Web at *http://www.ferc.gov* using the ''RIMS'' link, select ''Docket#'' and follow the instructions (call 202–208–2222 for assistance). Comments, protests and interventions may be filed electronically via the Internet in lieu of paper. See, 18 CFR 385.2001(a)(1)(iii) and the instructions on the Commission's Web site under the ''e-Filing'' link.

Linwood A. Watson, Jr.,

Deputy Secretary.

[FR Doc. 02–4041 Filed 2–19–02; 8:45 am]

BILLING CODE 6717–01–P

DEPARTMENT OF ENERGY

Federal Energy Regulatory Commission

[Docket No. RP02–13–001]

Portland Natural Gas Transmission System; Notice of Compliance Filing

February 13, 2002.

Take notice that on November 19, 2001, Portland Natural Gas Transmission System (Portland) submits an informational filing to comply with the Commission's Order Accepting and Suspending Tariff Sheet Subject to Refund and Conditions and Establishing a Hearing (October 31 suspension order).[1] The October 31 suspension order stated that Portland does not provide work paper support for its derivation of the seasonal FT rate of $89.1936 per Dth and, therefore, the Commission directed Portland to file such rate derivative support for the seasonal long-term firm rate.

Portland states that copies of this filing are being served on all jurisdictional customers, applicable state commissions, and interested parties that have requested service.

Any person desiring to protest said filing should file a protest with the Federal Energy Regulatory Commission, 888 First Street, NE, Washington, DC 20426, in accordance with section 385.211 of the Commission's Rules and Regulations. All such protests must be filed on or before February 20, 2002. Protests will be considered by the Commission in determining the appropriate action to be taken, but will not serve to make protestants parties to the proceedings. Copies of this filing are on file with the Commission and are available for public inspection. This filing may also be viewed on the Web at *http://www.ferc.gov* using the ''RIMS'' link, select ''Docket#'' and follow the instructions (call 202–208–2222 for assistance). Comments, protests and interventions may be filed electronically via the Internet in lieu of paper. See, 18 CFR 385.2001(a)(1)(iii) and the instructions on the Commission's Web site under the ''e-Filing'' link.

Linwood A. Watson, Jr.,

Deputy Secretary.

[FR Doc. 02–4040 Filed 2–19–02; 8:45 am]

BILLING CODE 6717–01–P

[1] 97 FERC ¶ 61,131 (2001).

DEPARTMENT OF ENERGY

Federal Energy Regulatory Commission

[Docket No. EL02–56–000]

Public Utility District No. 1 of Snohomish County, Washington, Complainant, v. Morgan Stanley Capital Group, Inc., Respondent; Notice of Complaint

February 13, 2002.

Take notice that on February 11, 2002, Public Utility District No. 1 of Snohomish County, Washington (Snohomish) filed a complaint with the Federal Energy Regulatory Commission (Commission) requesting that the Commission mitigate unjust and unreasonable terms and conditions contained in the long-term power supply contract between Snohomish and Morgan Stanley Capital Group (Seller) which was executed in January 2001 for service commencing on April 1, 2001.

Copies of the complaint were served on Seller.

Snohomish has requested privileged treatment of certain information in the complaint, and has filed privileged and public copies of the complaint, a request for privileged treatment, and a protective agreement.

Any person desiring to be heard or to protest this filing should file a motion to intervene or protest with the Federal Energy Regulatory Commission, 888 First Street, NE, Washington, DC 20426, in accordance with Rules 211 and 214 of the Commission's Rules of Practice and Procedure (18 CFR 385.211 and 385.214). All such motions or protests must be filed on or before March 4, 2002. Protests will be considered by the Commission in determining the appropriate action to be taken, but will not serve to make protestants parties to the proceeding. Any person wishing to become a party must file a motion to intervene. Answers to the complaint shall also be due on or before March 4, 2002. Copies of this filing are on file with the Commission and are available for public inspection. This filing may also be viewed on the Web at *http://www.ferc.gov* using the ''RIMS'' link, select ''Docket#'' and follow the instructions (call 202–208–2222 for assistance). Comments, protests, interventions and answers may be filed electronically via the Internet in lieu of paper. See, 18 CFR 385.2001(a)(1)(iii) and the instructions on the Commission's Web site under the ''e-Filing'' link.

Linwood A. Watson, Jr.,

Deputy Secretary.

[FR Doc. 02–4035 Filed 2–19–02; 8:45 am]

BILLING CODE 6717–01–P

DEPARTMENT OF ENERGY

Federal Energy Regulatory Commission

[Docket No. CP02–80–000]

Reliant Energy Gas Transmission Company; Notice of Application

February 13, 2002.

Take notice that on February 4, 2002, Reliant Energy Gas Transmission Company (REGT), whose main office is located at 1111 Louisiana Street, Houston, Texas 77210, filed in Docket No. CP02–80–000, an application requesting authorization to construct, own and operate mainline compression facilities and appurtenances located in Arkansas, pursuant to section 7(c) of the Natural Gas Act (NGA), as amended, and part 157 of the Commission's Rules and Regulations, all as more fully set forth in the application which is on file with the Commission and open to public inspection. Copies of this filing are on file with the Commission and are available for public inspection. This filing may also be viewed on the Web at *http://www.ferc.gov* using the ''RIMS'' link, select ''Docket #'' and follow the instructions (call 202–208–2222 for assistance).

Specifically, REGT states that it proposes to construct, own, and operate a 4,740 horsepower compressor station and appurtenant facilities on its Line J system in Jackson County, Arkansas which, upon completion, will enable firm transportation service by REGT to a new electric generating plant being constructed by TPS Dell, LLC (Dell). REGT states that the total construction costs are estimated to be $7.8 million.

REGT states that Dell has requested that firm service commence by October 1, 2002, and REGT requests Commission authorization be granted by June 1, 2002 to enable REGT to commence construction by July 1, 2002 to meet Dell's requested in service date.

Any questions concerning this application may be directed to Lawrence O. Thomas, Director, Rates and Regulatory, Reliant Energy Gas Transmission, PO Box 21734, Shreveport, Louisiana 71151, call (318) 429–2804, fax (318) 429–3133.

There are two ways to become involved in the Commission's review of

this project. First, any person wishing to obtain legal status by becoming a party to the proceedings for this project should, on or before March 6, 2002, file with the Federal Energy Regulatory Commission, 888 First Street, NE, Washington, DC 20426, a motion to intervene in accordance with the requirements of the Commission's Rules of Practice and Procedure (18 CFR 385.214 or 385.211) and the Regulations under the NGA (18 CFR 157.10). A person obtaining party status will be placed on the service list maintained by the Secretary of the Commission and will receive copies of all documents filed by the applicant and by all other parties. A party must submit 14 copies of filings made with the Commission and must mail a copy to the applicant and to every other party in the proceeding. Only parties to the proceeding can ask for court review of Commission orders in the proceeding.

However, a person does not have to intervene in order to have comments considered. The second way to participate is by filing with the Secretary of the Commission, as soon as possible, an original and two copies of comments in support of or in opposition to this project. The Commission will consider these comments in determining the appropriate action to be taken, but the filing of a comment alone will not serve to make the filer a party to the proceeding. The Commission's rules require that persons filing comments in opposition to the project provide copies of their protests only to the party or parties directly involved in the protest.

Persons who wish to comment only on the environmental review of this project should submit an original and two copies of their comments to the Secretary of the Commission. Environmental commenters will be placed on the Commission's environmental mailing list, will receive copies of the environmental documents, and will be notified of meetings associated with the Commission's environmental review process. Environmental commenters will not be required to serve copies of filed documents on all other parties. However, the non-party commenters will not receive copies of all documents filed by other parties or issued by the Commission (except for the mailing of environmental documents issued by the Commission) and will not have the right to seek court review of the Commission's final order.

Comments, protests and interventions may be filed electronically via the Internet in lieu of paper. See, 18 CFR 385.2001(a)(1)(iii) and the instructions on the Commission's Web site under the ''e-Filing'' link.

If the Commission decides to set the application for a formal hearing before an Administrative Law Judge, the Commission will issue another notice describing that process. At the end of the Commission's review process, a final Commission order approving or denying a certificate will be issued.

Linwood A. Watson, Jr.,

Deputy Secretary.

[FR Doc. 02–4034 Filed 2–19–02; 8:45 am]

BILLING CODE 6717–01–P

DEPARTMENT OF ENERGY

Federal Energy Regulatory Commission

[Docket No. EC02–15–001, et al.]

Cinergy Services, Inc., et al.; Electric Rate and Corporate Regulation Filings

February 12, 2002.

Take notice that the following filings have been made with the Commission. Any comments should be submitted in accordance with Standard Paragraph E at the end of this notice.

1. Cinergy Services, Inc.

[Docket Nos. EC02–15–001 and ER02–177–002]

Take notice that on February 8, 2002, Cinergy Services, Inc. (Cinergy) tendered for filing with the Federal Energy Regulatory Commission (Commission), an amendment to its applications filed in these proceedings on October 29, 2001. This was pursuant to the Commission's January 23, 2002, order issued in the above-captioned proceedings.

Comment Date: March 1, 2002.

2. Wisconsin Power & Light Company

[Docket No. ER02–977–000]

Take notice that on February 4, 2002, Wisconsin Power & Light Company (WPL) tendered for filing with the Federal Energy Regulatory Commission (Commission) new rates to be charged under its wholesale electric tariffs W–3A, PR–1, W–4A and DLM–1 to reflect the current cost of service incurred by WPL and its subsidiary South Beloit Water, Gas and Electric Company. WPL has asked that new interim rates become effective on April 22, 2002, and new final rates become effective concurrent with the Commission's final order in this proceeding. In addition WPL requests cancellation of its bundled wholesale electric tariffs W–1, W–3 and W–4.

A copy of this filing has been served upon the Illinois Commerce Commission, the Public Service Commission of Wisconsin and the WPL wholesale electric customers affected by this filing.

Comment Date: February 25, 2002.

3. Michigan Electric Transmission Company and Consumers Energy Company

[Docket ER02–424–001]

Take notice that on February 7, 2002, Consumers Energy Company (Consumers) and Michigan Electric Transmission Company (Michigan Transco) jointly filed a supplemental notice of succession to transfer previously overlooked rate schedules from Consumers to the Michigan Transco. The parties also submitted administrative agreements involving Wolverine Electric Cooperative, Inc. that allocate rights and responsibilities between Consumers and the Michigan Transco.

By acceptance letter dated January 23, 2002, that submittal was accepted by the Commission effective April, 2001, conditioned upon compliance with Order No. 614 within 15 days of the issuance of that acceptance letter. A Compliance Filing in the referenced docket, purporting to satisfy the aforementioned condition, was made by Consumers and Michigan Transco on February 7, 2002.

A full copy of the filing was served upon the Michigan Public Service Commission, and Wolverine Power Supply Cooperative, Inc., The City of Lansing, Board of Water and Light, and City of Grand Haven, Board of Light and Power.

Comment Date: February 28, 2002.

4. Calvert Cliffs Nuclear Power Plant, Inc.

[Docket No. ER02–445–001]

Take notice that on February 7, 2002, Calvert Cliffs Nuclear Power Plant, Inc. tendered for filing an amendment to a service agreement in compliance with Order No. 614 pursuant to the order issued in this docket on January 8, 2002. The January 8 Order accepted the amendment effective November 1, 2001 upon resubmission of the filing in compliance with Order No. 614.

Comment Date: February 28, 2002.

5. Delmarva Power & Light Company

[Docket No. ER02–797–001]

Take notice that on February 7, 2002, Delmarva Power & Light Company (Delmarva) tendered for filing a revised page 3 of an executed Interconnection Agreement between Delmarva and

Conectiv Delmarva Generation, Inc. (CDG). The revised page 3 eliminates references to a lease arrangement that no longer exists. Delmarva respectfully requests that the Commission allow the revised page 3 to become effective on January 23, 2002, the date on which Delmarva originally requested the Interconnection Agreement become effective.

Copies of the filing were served upon the Delaware Public Service Commission, the Maryland Public Service Commission and the Virginia State Corporation Commission.

Comment Date: February 28, 2002.

6. Alliant Energy Corporate Services, Inc.

[Docket No. ER02–975–000]

Take notice that on February 6, 2002, Alliant Energy Corporate Services, Inc., tendered for filing with the Federal Energy Regulatory Commission (Commission) four executed Service Agreements with Alliant Energy Corporate Services, Inc., establishing Alliant Energy Corporate Services, Inc., as a Long-Term Firm Transmission Customer under the terms of the Alliant Energy Corporate Services, Inc., Open Access Transmission Tariff.

Alliant Energy Corporate Services, Inc., requests effective dates of January 1, 2002, for service agreement with OASIS request numbers 853137, 969127, 969168 and 969198 and accordingly, seeks waiver of the Commission's notice requirement. A copy of this filing has been served upon the Illinois commerce commission, the Minnesota Public Utilities Commission, the Iowa Department of Commerce, and the Public Service Commission of Wisconsin.

Comment Date: February 27, 2002.

7. Alliant Energy Corporate Services, Inc.

[Docket No. ER02–979–000]

Take notice that on February 6, 2002, Alliant Energy Corporate Services, Inc., tendered for filing with the Federal Energy Regulatory Commission (Commission) an executed Service Agreement with GEN–SYS a Form of Service Agreement for Schedule 1 Service Associated With MAPP Schedule F.

Alliant Energy Corporate Services, Inc., requests an effective date of September 1, 2001, and accordingly, seeks waiver of the Commission's notice requirements. A copy of this filing has been served upon the Illinois Commerce Commission, the Minnesota Public Utilities Commission, the Iowa Department of Commerce, and the Public Service Commission of Wisconsin.

Comment Date: February 27, 2002.

8. Duke Energy Enterprise, LLC

[Docket No. ER02–984–000]

Take notice that on February 7, 2002, Duke Energy Enterprise, LLC (Duke Enterprise) tendered for filing pursuant to Section 205 of the Federal Power Act revisions to its proposed FERC Electric Tariff No. 1.

Duke Enterprise requests pursuant to Section 35.11 of the Commission's regulations that the Commission waive the 60-day minimum notice requirement under Section 35.3(a) of its regulations and grant an effective date for this application of February 8, 2002, the date on which Duke Enterprise anticipates commencing the sale of test energy.

Comment Date: February 28, 2002.

9. MidAmerican Energy Company

[Docket No. ER02–985–000]

Take notice that on February 7, 2002, MidAmerican Energy Company (MidAmerican), 401 Douglas Street, P. O. Box 778, Sioux City, Iowa 51102, filed with the Commission a Non-Firm Transmission Service Agreement with enXco, Inc., dated January 7, 2002, and entered into pursuant to MidAmerican's Open Access Transmission Tariff.

MidAmerican requests an effective date of January 7, 2002, for the Agreement and seeks a waiver of the Commission's notice requirement. MidAmerican has served a copy of the filing on the Iowa Utilities Board and enXco, Inc.

Comment Date: February 28, 2002.

10. PacifiCorp

[Docket No. ER02–986–000]

Take notice that on February 6, 2002, PacifiCorp, tendered for filing in accordance with 18 CFR 35 of the Commission's Rules and Regulations, Notice of Cancellation of Service Agreement No. 6 under PacifiCorp's FERC Electric Tariff, Volume No. 12, between PacifiCorp and Public Utility District No. 1 of Cowlitz County effective date April 28, 1997.

Copies of this filing were supplied to the Washington Utilities and Transportation Commission and the Public Utility Commission of Oregon and Public Utility District No. 1 of Cowlitz County .

Comment Date: February 28, 2002.

11. American Transmission Systems, Inc., Ohio Edison Company, The Cleveland Electric Illuminating Company, The Toledo Edison Company

[Docket No. ER02–987–000]

Take notice that on February 8, 2002, American Transmission Systems, Inc., tendered for filing on behalf of itself and Ohio Edison Company, The Cleveland Electric Illuminating Company, and The Toledo Edison Company, a Service Agreement for Network Integration Service and Operating Agreement for the Network Integration Transmission Service under the Ohio Retail Electric Program with The New Power Company pursuant to the America Transmission Systems, Inc. Open Access Tariff. This agreement will enable the party to obtain Network integration Service under the Ohio Retail Electric Program in accordance with the terms of the Tariff. The proposed effective date under this agreement is February 6, 2002.

Comment Date: March 1, 2002.

12. American Electric Power Service Corporation

[Docket No. ER02–988–000]

Take notice that on February 8, 2002, American Electric Power Service Corporation submitted for filing an executed ERCOT Generation Interconnection Agreement, dated January 11, 2002, between Central Power and Light Company (CPL) and E. I. du Pont de Nemours and Company. The agreement is pursuant to the AEP Companies' Open Access Transmission Service Tariff (OATT) that has been designated as the Operating Companies of the American Electric Power System FERC Electric Tariff Second Revised Volume No. 6, effective June 15, 2000.

CPL requests an effective date of January 12, 2002. Copies of CPL's filing have been served upon E. I. du Pont de Nemours and Company and the Public Utility Commission of Texas.

Comment Date: March 1, 2002.

13. Wisconsin Electric Power Company

[Docket No. ER02–989–000]

Take notice that on February 8, 2002, Service Agreement No. 31, effective December 20, 1995, under Wisconsin Electric Power Company's Coordination Sales Tariff, (FERC Electric Tariff Second Revised Volume 2) and Service Agreement No. 25 effective July 13, 1998, under Wisconsin Electric Power Company's Market Rate Sales Tariff, (FERC Electric Tariff Original Volume No. 8) are to be canceled as requested by the customer Entergy-Koch Trading.

Copies of the filing have been served on Entergy-Koch Trading, Michigan

Public Service Commission, and the Public Service Commission of Wisconsin.

Comment Date: March 1, 2002.

14. Wisconsin Electric Power Company

[Docket No. ER02–990–000]

Take notice that on February 8, 2002, Wisconsin Electric Power Company (Wisconsin Electric), tendered for filing an electric service agreement under its Market Rate Sales Tariff (FERC Electric Tariff, Original Volume No. 8) with IDACORP Energy L.P. Wisconsin Electric respectfully requests an effective date of February 1, 2002 to allow for economic transactions.

Wisconsin Electric requests waiver of any applicable notice requirements to allow for the requested effective date as specified. Copies of the filing have been served on IDACORP Energy, L.P., the Michigan Public Service Commission, and the Public Service Commission of Wisconsin.

Comment Date: March 1, 2002.

15. Virginia Electric and Power Company

[Docket No. ER02–991–000]

Take notice that on February 8, 2002, Virginia Electric and Power Company (the Company) respectfully tendered for filing the Service Agreement by Virginia Electric and Power Company to Allegheny Energy Supply Company, LLC designated as Service Agreement No. 11 under the Company's market-based rate tariff, FERC Electric Tariff, Original Volume No. 6, effective on June 15, 2001.

The Company requests an effective date of January 28, 2002, as requested by the customer. Copies of the filing were served upon Allegheny Energy Supply Company, LLC, the Virginia State Corporation Commission, and the North Carolina Utilities Commission.

Comment Date: March 1, 2002.

16. Commonwealth Edison Company

[Docket No. ER02–992–000]

Take notice that on February 8, 2002, Commonwealth Edison Company (ComEd) submitted for filing two Form of Service Agreements for Firm Point-To-Point Transmission Service (Service Agreements) and the corresponding Network Upgrade Agreement between ComEd and MidAmerican Energy Co. (MidAmerican) under the terms of ComEd's Open Access Transmission Tariff (OATT).

ComEd requests an effective date of February 1, 2002, and accordingly seeks waiver of the Commission's notice requirements. A copy of this filing was served on MidAmerican.

Comment Date: March 1, 2002.

17. Southwest Power Pool, Inc.

[Docket No. ER02–993–000]

Take notice that on February 8, 2002, Southwest Power Pool, Inc. (SPP) submitted for filing executed service agreements for Firm Point-to-Point Transmission Service and Non-Firm Point-To-Point Transmission Service with Mirant Americas Energy Marketing, LP (Mirant).

SPP seeks an effective date of January 19, 2002, for these service agreements. Mirant was served with a copy of this filing.

Comment Date: March 1, 2002.

18. Duke Energy Corporation

[Docket No. ER02–994–000]

Take notice that on February 8, 2002, Duke Energy Corporation filed an amendment to the Restated Interchange Agreement dated February 10, 1992 between Duke Power Company and South Carolina Public Service Authority.

Comment Date: March 1, 2002.

Standard Paragraph

E. Any person desiring to be heard or to protest such filing should file a motion to intervene or protest with the Federal Energy Regulatory Commission, 888 First Street, NE., Washington, DC 20426, in accordance with rules 211 and 214 of the Commission's rules of practice and procedure (18 CFR 385.211 and 385.214). All such motions or protests should be filed on or before the comment date. Protests will be considered by the Commission in determining the appropriate action to be taken, but will not serve to make protestants parties to the proceeding. Any person wishing to become a party must file a motion to intervene. Copies of this filing are on file with the Commission and are available for public inspection. This filing may also be viewed on the web at *http://www.ferc.gov* using the ''RIMS'' link, select ''Docket#'' and follow the instructions (call 202–208–2222 for assistance). Comments, protests and interventions may be filed electronically via the Internet in lieu of paper. See, 18 CFR 385.2001(a)(1)(iii) and the instructions on the Commission's web site under the ''e-Filing'' link.

Magalie R. Salas,

Secretary.

[FR Doc. 02–4032 Filed 2–19–02; 8:45 am]

BILLING CODE 6717–01–P

DEPARTMENT OF ENERGY

Federal Energy Regulatory Commission

[Docket No. CP02–60–000]

CMS Trunkline LNG Company, LLC.; Notice of Intent To Prepare an Environmental Assessment for the Proposed Trunkline LNG Expansion Project, Request for Comments on Environmental Issues, and Notice of Public Meeting

February 13, 2002.

The staff of the Federal Energy Regulatory Commission (FERC or Commission) will prepare an environmental assessment (EA) that will discuss the environmental impacts of CMS Trunkline LNG Company, LLC's (Trunkline LNG) Expansion Project involving construction and operation of facilities in Calcasieu Parish, Louisiana.[1] The project involves expanding the storage and sendout capacity of Trunkline LNG's existing, certificated liquefied natural gas (LNG) marine import terminal. This EA will be used by the Commission in its decision-making process to determine whether the project is in the public convenience and necessity.

Summary of the Proposed Project

Trunkline LNG proposes: (1) To expand the LNG storage capacity; (2) to increase the sustainable daily sendout capability to 1,200 million cubic feet per day (MMcfd) and its peaking capacity to 1,300 MMcfd; and (3) to accommodate two LNG tankers at one time. Trunkline LNG seeks authorization to construct and operate the following new facilities at its existing site:

- LNG ship unloading facility with three liquid unloading arms, one vapor return/delivery arm, mooring and breasting dolphins, fendering system, and support trestles;
- One 880,000 barrel (2.9 billion cubic feet of gas equivalent) double-wall LNG storage tank with spill containment dike;
- Three 360 MMcfd first stage LNG pumps;
- Four 192 MMcfd second stage LNG pumps with a recondenser vessel;
- Three 150 MMcfd submerged combustion vaporizers;
- One desuperheater;
- High expansion foam building;
- Electrical building;
- One cryogenic fuel gas/ship vapor return compressor;

[1] Trunkline LNG's application was filed with the Commission under Section 7 of the Natural Gas Act and Part 157 of the Commission's regulations.

• Two 22 megawatt combustion turbine electric generators capable of handling the sendout volume and the unloading of two ships simultaneously; and

• Associated civil, mechanical, electrical, control, and hazard detection systems.

In a related application filed under Docket No. CP02–55–000, CMS Trunkline Gas Company, LLC (Trunkline Gas) seeks authorization to modify its metering facilities under Section 7(c) of the Natural Gas Act and Part 157 of the Commission's regulations. Trunkline Gas would replace two 16-inch-diameter orifice meter runs with two 16-inch-diameter ultrasonic meter runs and associated facilities. The remaining three 16-inch-diameter orifice meter runs would remain in place.

Land Requirements for Construction

The Trunkline LNG terminal occupies about 125 fenced acres on the Calcasieu Ship Channel. Through ownership and leases, Trunkline LNG has control of 395 acres. The proposed facilities would occupy about 8.8 acres of land within the developed site and 1.2 acres of water within the existing turning basin. Contractor staging and storage would temporarily affect an additional 35.3 acres of land within the developed site and 0.2 acre of water within the existing turning basin.

The EA Process

The National Environmental Policy Act (NEPA) requires the Commission to take into account the environmental impacts that could result from an action whenever it considers the issuance of a Certificate of Public Convenience and Necessity. NEPA also requires us to discover and address concerns the public may have about proposals. We call this ''scoping''.[2] The main goal of the scoping process is to focus the analysis in the EA on the important environmental issues. By this Notice of Intent, the Commission requests public comments on the scope of the issues it will address in the EA. All comments received are considered during the preparation of the EA. State and local government representatives are encouraged to notify their constituents of this proposed action and encourage them to comment on their areas of concern.

The EA will discuss impacts that could occur as a result of the construction and operation of the proposed project under these general headings:

• Geology and soils
• Water resources, fisheries, and wetlands
• Vegetation and wildlife
• Air quality and noise
• Land use
• Cultural resources
• Endangered and threatened species
• Public safety

We will also evaluate possible alternatives to the proposed project or portions of the project, and make recommendations on how to lessen or avoid impacts on the various resource areas.

Our independent analysis of the issues will be presented in the EA. Depending on the comments received during the scoping process, the EA may be published and mailed to Federal, state, and local agencies, public interest groups, interested individuals, affected landowners, newspapers, libraries, and the Commission's official service list for this proceeding. A comment period will be allotted for review if the EA is published. We will consider all comments on the EA before we make our recommendations to the Commission.

To ensure your comments are considered, please carefully follow the instructions in the public participation section beginning on page 4.

Currently Identified Environmental Issues

We have already identified several environmental issues that we think deserve attention based on a preliminary review of the proposed facilities and the environmental information provided by Trunkline LNG. This preliminary list of issues may be changed based on your comments and our analysis.

• Up to 175 LNG tankers per year would transit the Calcasieu Ship Channel to the terminal by the year 2006.

• Environmental and technical issues associated with the construction and operation of: a LNG ship unloading facility; a 880,000 barrel LNG storage tank; and the expansion of the terminal's sendout capacity.

Public Participation

You can make a difference by providing us with your specific comments or concerns about the project. By becoming a commentor, your concerns will be addressed in the EA and considered by the Commission. You should focus on the potential environmental effects of the proposal, alternatives to the proposal, and measures to avoid or lessen environmental impact. The more specific your comments, the more useful they will be. Please carefully follow these instructions to ensure that your comments are received in time and properly recorded:

• Send an original and two copies of your letter to: Magalie R. Salas, Secretary, Federal Energy Regulatory Commission, 888 First St., NE., Room 1A, Washington, DC 20426.

• Label one copy of the comments for the attention of the Gas 1, PJ–11.1.

• Reference Docket No. CP02–60–000.

• Mail your comments so that they will be received in Washington, DC on or before March 15, 2002.

Comments may also be filed electronically via the Internet in lieu of paper. See 18 CFR 385.2001(a)(1)(iii) and the instructions on the Commission's web site at *http://www.ferc.gov* under the ''e-Filing'' link and the link to the User's Guide. Before you can file comments you will need to create an account which can be created by clicking on ''Login to File'' and then ''New User Account.'' Due to current events, we cannot guarantee that we will receive mail on a timely basis from the U.S. Postal Service, and we do not know how long this situation will continue. However, we continue to receive filings from private mail delivery services, including messenger services, in a reliable manner. The Commission encourages electronic filing of any comments or interventions or protests to this proceeding. We will include all comments that we receive within a reasonable time frame in our environmental analysis of this project.

Public Scoping Meeting and Site Visit

In addition to asking for written comments, we invite you to attend a public scoping meeting that we will conduct in the project area. The purpose of the scoping meeting is to provide state and local agencies, interested groups, affected landowners, and the general public with an opportunity to learn more about the project and another chance to present us with environmental issues or concerns they believe should be addressed in the EA. A transcript of the meeting will be made so that your comments will be accurately recorded. The location and time is listed below:

March 6, 2002, 7:00 pm, The Chamber—Southwest Louisiana, Ground Floor Meeting Room, 120 West Pujo Street, Lake Charles, LA.

The purpose of the scoping meeting is limited to environmental issues only.

[2] ''We'', ''us'', and ''our'' refer to the environmental staff of the Office of Energy Projects (OEP).

Technical meetings associated with the engineering and cryogenic design of the facility may be conducted at a later date.

Becoming an Intervenor

In addition to involvement in the EA scoping process, you may want to become an official party to the proceeding known as an ''intervenor''. Intervenors play a more formal role in the process. Among other things, intervenors have the right to receive copies of case-related Commission documents and filings by other intervenors. Likewise, each intervenor must provide 14 copies of its filings to the Secretary of the Commission and must send a copy of its filings to all other parties on the Commission's service list for this proceeding. If you want to become an intervenor you must file a motion to intervene according to rule 214 of the Commission's rules of practice and procedure (18 CFR 385.214) (see appendix).[3] Only intervenors have the right to seek rehearing of the Commission's decision.

Affected landowners and parties with environmental concerns may be granted intervenor status upon showing good cause by stating that they have a clear and direct interest in this proceeding which would not be adequately represented by any other parties. You do not need intervenor status to have your environmental comments considered.

Additional information about the proposed project is available from the Commission's Office of External Affairs at (202) 208–1088 or on the FERC website (www.ferc.gov) using the ''RIMS'' link to information in this docket number. Click on the ''RIMS'' link, select ''Docket #'' from the RIMS Menu, and follow the instructions. For assistance with access to RIMS, the RIMS helpline can be reached at (202) 208–2222.

Similarly, the ''CIPS'' link on the FERC Internet website provides access to the texts of formal documents issued by the Commission, such as orders, notices, and rulemakings. From the FERC Internet website, click on the ''CIPS'' link, select ''Docket #'' from the CIPS menu, and follow the instructions. For assistance with access to CIPS, the CIPS helpline can be reached at (202) 208–2474.

Linwood A. Watson, Jr.,

Deputy Secretary.

[FR Doc. 02–4033 Filed 2–19–02; 8:45 am]

BILLING CODE 6717–01–P

[3] Interventions may also be filed electronically via the Internet in lieu of paper. See the previous discussion on filing comments electronically. The appendix referenced in this notice are not being printed in the **Federal Register**. Copies are available on the Commission's website at the ''RIMS'' link or from the Commission's Public Reference and Files Maintenance Branch, 888 First Street, NE., Washington, DC 20426, or call (202) 208–1371. For instructions on connecting to RIMS refer to the last page of this notice. Copies of the appendix were sent to all those receiving this notice in the mail.

DEPARTMENT OF ENERGY

Federal Energy Regulatory Commission

Notice of Applications Ready for Environmental Analysis and Soliciting Comments, Recomendations, Terms and Conditions, and Prescriptions

February 13, 2002.

Take notice that the following hydroelectric applications have been filed with the Commission and are available for public inspection.

a. *Type of Application:* New Major Licenses.

b. *Projects:* Soda Project No. 20–019, Grace-Cove Project No. 2401–007, and Oneida Project No. 472–017.

c. *Date filed:* September 27, 1999.

d. *Applicant:* PacifiCorp.

e. *Location:* On the Bear River in Caribou and Franklin Counties, Idaho. The projects are partially located on United States lands administered by the Bureau of Land Management.

f. *Filed Pursuant to:* Federal Power Act, 16 U.S.C. §§ 791 (a)–825(r).

g. *Applicant Contact:* Randy Landolt, Managing Director, Hydro Resources, PacifiCorp, 825 NE Multnomah Street, Suite 1500, Portland, OR 97232, (503) 813–6650; or Thomas H. Nelson, 825 NE Multnomah Street, Suite 925, Portland, OR 97232, (503) 813–5890.

h. *FERC Contact:* Susan O'Brien, e-mail address susan.obrien@ferc.fed.us, or (202) 219–2840.

i. *Deadline for filing comments, recommendations, terms and conditions, and prescriptions:* 60 days from the issuance of this notice.

All documents (original and eight copies) should be filed with: Magalie R. Salas, Secretary, Federal Energy Regulatory Commission, 888 First Street, NE, Washington, DC 20426.

The Commission's Rules of Practice require all intervenors filing documents with the Commission to serve a copy of that document on each person on the official service list for the project. Further, if an intervenor files comments or documents with the Commission relating to the merits of an issue that may affect the responsibilities of a particular resource agency, they must also serve a copy of the document on that resource agency.

Comments, recommendations, terms and conditions, and prescriptions may be filed electronically via the Internet in lieu of paper. See 18 CFR 385.2001(a)(1)(iii) and the instructions on the Commission's Web site, http://www.ferc.gov, under the ''e-Filing'' link.

j. This application has been accepted, and is ready for environmental analysis at this time.

k. The existing Soda Project consists of: (1) The 103-foot-high and 433-foot-long concrete gravity Soda dam with a 114-foot-long spillway section; (2) the Soda reservoir with a surface area of 1,100 acres, an active storage capacity of 16,300 acre-feet, and a maximum water surface elevation of 5,720 feet; (3) the Soda powerhouse containing two units with a total installed capacity of 14 megawatts (MW); and (4) other appurtenances.

The existing Grace Development consists of: (1) A 51-foot-high and 180-foot-long rock filled timber crib dam that creates a 250-acre-foot usable storage capacity forebay; (2) a 26,000-foot-long flowline and surge tanks; and (3) a powerhouse with three units with total installed capacity of 33 MW. The Cove Development consists of: (1) A 26.5-foot-high and 141-foot-long concrete dam creating a 60-acre-foot capacity forebay; (2) a 6,125-foot-long concrete and wood flume; (3) a 500-foot-long steel penstock; and (4) a powerhouse with a 7.5-MW unit.

The existing Oneida Project consists of: (1) The 111-foot-high and 456-foot-long concrete gravity Oneida dam; (2) the Oneida reservoir with an active storage of 10,880 acre-feet and a surface area of 480 acres; (3) a 16-foot-diameter, 2,240-foot-long flowline; (4) a surge tank; (5) three 12-foot-diameter, 120-foot-long steel penstocks; (6) the Oneida powerhouse with three units with a total installed capacity of 30 MW; and (7) other appurtenances.

l. A copy of the application is on file with the Commission and is available for public inspection. This filing may also be viewed on the Web at http://www.ferc.gov using the ''RIMS'' link—select ''Docket #'' and follow the instructions (call 202–208–2222 for assistance). A copy is also available for inspection and reproduction at the address in item g above.

m. The Commission directs, pursuant to section 4.34(b) of the Regulations (see Order No. 533 issued May 8, 1991, 56 FR 23108, May 20, 1991) that all comments, recommendations, terms and conditions and prescriptions concerning the application be filed with the Commission within 60 days from the issuance date of this notice. All reply

comments must be filed with the Commission within 105 days from the date of this notice.

All filings must (1) bear in all capital letters the title ''COMMENTS'', ''REPLY COMMENTS'', ''RECOMMENDATIONS,'' ''TERMS AND CONDITIONS,'' or ''PRESCRIPTIONS''; (2) set forth in the heading the name of the applicant and the project number of the application to which the filing responds; (3) furnish the name, address, and telephone number of the person submitting the filing; and (4) otherwise comply with the requirements of 18 CFR 385.2001 through 385.2005. All comments, recommendations, terms and conditions or prescriptions must set forth their evidentiary basis and otherwise comply with the requirements of 18 CFR 4.34(b). Agencies may obtain copies of the application directly from the applicant. Each filing must be accompanied by proof of service on all persons listed on the service list prepared by the Commission in this proceeding, in accordance with 18 CFR 4.34(b), and 385.2010.

Linwood A. Watson, Jr.,

Deputy Secretary.

[FR Doc. 02–4037 Filed 2–19–02; 8:45 am]

BILLING CODE 6717–01–P

DEPARTMENT OF ENERGY

Federal Energy Regulatory Commission

Notice of Application Tendered for Filing With the Commission, Soliciting Additional Study Requests, and Establishing Procedures for Relicensing and a Deadline for Submission of Final Amendments

February 13, 2002.

Take notice that the following hydroelectric application has been filed with the Commission and is available for public inspection.

a. *Type of Application:* New Major License.

b. *Project No.:* 7000–015.

c. *Date Filed:* January 30, 2002.

d. *Applicant:* Newton Falls Holdings, LLC (NFH).

e. *Name of Project:* Newton Falls Hydroelectric Project.

f. *Location:* The existing project is located on the Oswegatchie River in St. Lawrence County, New York. The project does not affect federal lands.

g. *Filed Pursuant to:* Federal Power Act 16 U.S.C. 791(a)–825(r).

h. *Applicant Contact:* Harold G. Slone, Manager, Newton Falls Holdings, LLC, 1930 West Wesley Road, NW, Atlanta, GA 30327; Telephone (770) 638–1172

i. *FERC Contact:* Jim Haimes, (202) 219–2780 or *james.haimes@ferc.gov.*

j. *Deadline for filing additional study requests:* April 1, 2002.

All documents (original and eight copies) should be filed with: Magalie Roman Salas, Secretary, Federal Energy Regulatory Commission, 888 First Street, NE, Washington, DC 20426.

The Commission's Rules of Practice require all intervenors filing documents with the Commission to serve a copy of that document on each person on the official service list for the project. Further, if an intervenor files comments or documents with the Commission relating to the merits of an issue that may affect the responsibilities of a particular resource agency, they must also serve a copy of the document on that resource agency.

Additional study requests may be filed electronically via the Internet in lieu of paper. See 18 CFR 385.2001(a)(1)(iii) and the instructions on the Commission's Web site (http://www.ferc.gov) under the ''e-Filing'' link.

k. This application is not ready for environmental analysis at this time.

l. The existing Newton Falls Hydroelectric Project consists of an upper and a lower development with a combined installed capacity of 2,220 kilowatts (kW). The project produces an average annual generation of 9,500,000 kilowatt-hours. From approximately 1927 until late 2000, the electricity produced by the project was consumed by the adjacent Newton Falls Paper Mill. Since this facility ceased manufacturing operations, almost all electricity produced at the project has been sold to the Niagara Mohawk Power Corporation.

The upper development includes the following constructed facilities: (1) A 40-foot-high, 600-foot-long, concrete gravity dam with 3-foot-high flash boards mounted on the 58-foot-long spillway; (2) a 42-foot-long floodgate structure with four gates; (3) a 650-acre reservoir with a gross storage capacity of 5,930 acre-feet; (4) a reinforced concrete intake structure with a maximum height of 25 feet, equipped with trash racks having 2-inch spacing; (5) a 9-foot-diameter, 1,200-foot-long, wood stave penstock supported on timber cradles and mud sills; (6) a riveted steel surge tank; (7) a 49-foot-long, 26-foot-wide, and 45-foot-high, reinforced concrete and brick powerhouse, containing three vertical Francis turbines with a combined maximum hydraulic capacity of 464 cubic feet per second (cfs) and a net head of 46 feet, directly connected to three generator units having a total installed capacity of 1,540 kilowatts (kW); (8) a 375-foot-long, 60 Hertz transmission line; and (9) appurtenant facilities.

The lower development includes the following constructed facilities: (1) A 28-foot-high, 350-foot-long, concrete gravity dam with 3-foot-high flash boards mounted on the 120-foot-long spillway; (2) a 9-acre impoundment with a gross storage capacity of 115 acre-feet; (3) a 15-foot-high, reinforced concrete intake structure, equipped with trash racks having 2-inch spacing; (4) a 60-foot-long by 40-foot-wide, reinforced concrete powerhouse located immediately downstream of the dam, containing one vertical Francis turbine with a maximum hydraulic capacity of 486 cfs and a net head of 22 feet, directly connected to a 680-kW generator unit; (5) a 2,200-foot-long, 60 Hertz transmission line; and (6) appurtenant facilities.

With the exception of periods of high inflows, the upper development is operated as a daily peaking facility with most generation taking place during the hours of peak electricity demand. This store and release operation is restricted during the months of May and June, the spawning period for smallmouth bass and northern pike, such that daily reservoir drawdowns do not exceed 1 foot from the top of the flash boards. During the remainder of the year, daily peaking causes reservoir drawdowns of up to 2.2 feet from the top of the flash boards.

The tailrace of the upper development discharges directly into the lower development's reservoir. Generally, the hydraulic output of the lower powerhouse is established such that it releases approximately the same flow as the upper one. Consequently, daily drawdowns of the lower reservoir are minimal.

Although the project's current license does not mandate the provision of minimum flows in the project's bypassed reaches, the licensee is required to provide a continuous minimum flow of 100 cfs or project inflow, whichever is less, below the lower development. Further, the existing license does not require the provision of public recreational facilities at the project. Currently, the applicant and concerned agencies and non-governmental organizations are discussing a settlement agreement that would require NFH to implement various environmental enhancement measures at the project.

m. *Locations of the Application:* A copy of the application is available for inspection and reproduction at the

Commission's Public Reference Room, Room 2A, located at 888 First Street, NE, Washington, DC 20426, or by calling (202) 208–1371. The application may be viewed on the Web at *http://www.ferc.gov* using the ''RIMS'' link—select ''Docket P–7000'' and follow the instructions (call (202) 208–2222 for assistance). A copy is also available for inspection and reproduction at the address in item h above.

n. With this notice, we are initiating consultation with the New York State Historic Preservation Officer as required by Section 106, National Historic Preservation Act, and the regulations of the Advisory Council on Historic Preservation, 36 CFR 800.4.

o. Under section 4.32(b)(7) of the Commission's regulations (18 CFR 4.32(b)(7)), if any resource agency, Indian Tribe, or person believes that the applicant should conduct an additional scientific study to form an adequate factual basis for a complete analysis of the application on its merits, they must file a request for the study with the Commission, not later than 60 days after the date the application is filed, and must serve a copy of the request on the applicant.

p. Procedural schedule and final amendments: The application will be processed to include the following actions, some of which may be combined to expedite processing:

Notice of application accepted for filing
Notice of NEPA scoping
Notice of application ready for environmental analysis
Notice of the availability of the draft NEPA document
Notice of the availability of the final NEPA document
Order issuing the Commission's decision on the application

Final amendments to the application must be filed with the Commission no later than 30 days from the issuance date of the notice of ready for environmental analysis.

Linwood A. Watson, Jr.,

Deputy Secretary.

[FR Doc. 02–4038 Filed 2–19–02; 8:45 am]

BILLING CODE 6717–01–P

ENVIRONMENTAL PROTECTION AGENCY

[FRL–7147–7]

Acid Rain Program: Notice of State Acid Rain Programs

AGENCY: Environmental Protection Agency (EPA).

ACTION: Notice.

SUMMARY: Under titles IV and V of the Act, State and local air permitting authorities develop and administer acid rain programs as part of their title V operating permits programs. The state and local permitting authorities listed in this notice submitted acid rain programs for EPA review that are acceptable to the EPA Administrator as part of their title V operating permits programs. This notice is for informational purposes only and does not supplant any other **Federal Register** notices under title V.

FOR FURTHER INFORMATION CONTACT: Robert Miller, U.S. EPA, Clean Air Markets Division (6204N), 1200 Pennsylvania Ave. NW, Washington, DC 20460, (202) 564–9077.

SUPPLEMENTARY INFORMATION: The following state and local permitting authorities have submitted Acid Rain programs that are acceptable to the EPA Administrator as part of their title V operating permits programs:

Region 3

The Delaware Department of Natural Resources and Environmental Control in the state of Delaware, the Maryland Department of the Environment in the state of Maryland, the Pennsylvania Department of Environmental Protection in the state of Pennsylvania, the Virginia Department of Environmental Quality in the Commonwealth of Virginia, and the Department of Health, Bureau of Environmental Quality in the District of Columbia;

Region 4

The Western North Carolina Regional Air Quality Agency in the state of North Carolina;

Region 5

The Illinois Environmental Protection Agency in the state of Illinois and the Ohio Environmental Protection Agency in the state of Ohio;

Region 8

The Wyoming Department of Environmental Quality in the State of Wyoming.

Dated: February 8, 2002.

Brian J. McLean,

Director, Acid Rain Division, Office of Atmospheric Programs, Office of Air and Radiation.

[FR Doc. 02–4069 Filed 2–19–02; 8:45 am]

BILLING CODE 6560–50–P

ENVIRONMENTAL PROTECTION AGENCY

[OPP–50875C; FRL–6820–4]

Experimental Use Permit; Receipt of Application

AGENCY: Environmental Protection Agency (EPA).

ACTION: Notice.

SUMMARY: This notice announces receipt of an application to amend 524–EUP–93 from Monsanto Company requesting an experimental use permit (EUP) for the plant-pesticide *Bacillus thuringiensis* Cry3Bb protein and the genetic material necessary for its production (Vector ZMIR13L) in corn plants. The Agency has determined that the application may be of regional and national significance. Therefore, in accordance with 40 CFR 172.11(a), the Agency is soliciting comments on this application.

DATES: Comments, identified by docket control number OPP–50875C, must be received on or before March 22, 2002.

ADDRESSES: Comments and data may be submitted by mail, electronically, or in person. Please follow the detailed instructions for each method as provided in Unit I. of the **SUPPLEMENTARY INFORMATION**. To ensure proper receipt by EPA, it is imperative that you identify docket control number OPP–50875C in the subject line on the first page of your response.

FOR FURTHER INFORMATION CONTACT: By mail: Mike Mendelsohn, Biopesticides and Pollution Prevention Division (7511C), Office of Pesticide Programs, Environmental Protection Agency, 1200 Pennsylvania Ave., NW., Washington, DC 20460; telephone number: (703) 308–8715; e-mail address: mendelsohn.mike@epa.gov.

SUPPLEMENTARY INFORMATION:

I. General Information

A. Does this Action Apply to Me?

This action is directed to the public in general. This action may, however, be of interest to those persons who are interested in agricultural biotechnology or may be required to conduct testing of chemical substances under the Federal Food, Drug, and Cosmetic Act (FFDCA) or the Federal Insecticide, Fungicide, and Rodenticide Act (FIFRA). Since other entities may also be interested, the Agency has not attempted to describe all the specific entities that may be affected by this action. If you have any questions regarding the applicability of this action to a particular entity, consult the person listed under **FOR FURTHER INFORMATION CONTACT**.

B. How Can I Get Additional Information, Including Copies of this Document and Other Related Documents?

1. *Electronically*. You may obtain electronic copies of this document, and certain other related documents that might be available electronically, from the EPA Internet Home Page at http://www.epa.gov/. To access this document, on the Home Page select ''Laws and Regulations,'' ''Regulations and Proposed Rules,'' and then look up the entry for this document under the ''**Federal Register**—Environmental Documents.'' You can also go directly to the **Federal Register** listings at http://www.epa.gov/fedrgstr/.

2. *In person*. The Agency has established an official record for this action under docket control number OPP–50875C. The official record consists of the documents specifically referenced in this action, and other information related to this action, including any information claimed as Confidential Business Information (CBI). This official record includes the documents that are physically located in the docket, as well as the documents that are referenced in those documents. The public version of the official record does not include any information claimed as CBI. The public version of the official record, which includes printed, paper versions of any electronic comments submitted during an applicable comment period is available for inspection in the Public Information and Records Integrity Branch (PIRIB), Rm. 119, Crystal Mall #2, 1921 Jefferson Davis Hwy., Arlington, VA, from 8:30 a.m. to 4 p.m., Monday through Friday, excluding legal holidays. The PIRIB telephone number is (703) 305–5805.

C. How and to Whom Do I Submit Comments?

You may submit comments through the mail, in person, or electronically. To ensure proper receipt by EPA, it is imperative that you identify docket control number OPP–50875C in the subject line on the first page of your response.

1. *By mail*. Submit your comments to: Public Information and Records Integrity Branch (PIRIB), Information Resources and Services Division (7502C), Office of Pesticide Programs (OPP), Environmental Protection Agency, 1200 Pennsylvania Ave., NW., Washington, DC 20460.

2.*In person or by courier*. Deliver your comments to: Public Information and Records Integrity Branch (PIRIB), Information Resources and Services Division (7502C), Office of Pesticide Programs (OPP), Environmental Protection Agency, Rm. 119, Crystal Mall #2, 1921 Jefferson Davis Hwy., Arlington, VA. The PIRIB is open from 8:30 a.m. to 4 p.m., Monday through Friday, excluding legal holidays. The PIRIB telephone number is (703) 305–5805.

3. *Electronically*. You may submit your comments electronically by e-mail to: opp-docket@epa.gov, or you can submit a computer disk as described above. Do not submit any information electronically that you consider to be CBI. Avoid the use of special characters and any form of encryption. Electronic submissions will be accepted in WordPerfect 6.1/8.0 or ASCII file format. All comments in electronic form must be identified by docket control number OPP–50875C. Electronic comments may also be filed online at many Federal Depository Libraries.

D. How Should I Handle CBI That I Want to Submit to the Agency?

Do not submit any information electronically that you consider to be CBI. You may claim information that you submit to EPA in response to this document as CBI by marking any part or all of that information as CBI. Information so marked will not be disclosed except in accordance with procedures set forth in 40 CFR part 2. In addition to one complete version of the comment that includes any information claimed as CBI, a copy of the comment that does not contain the information claimed as CBI must be submitted for inclusion in the public version of the official record. Information not marked confidential will be included in the public version of the official record without prior notice. If you have any questions about CBI or the procedures for claiming CBI, please consult the person listed under **FOR FURTHER INFORMATION CONTACT**.

E. What Should I Consider as I Prepare My Comments for EPA?

You may find the following suggestions helpful for preparing your comments:

1. Explain your views as clearly as possible.
2. Describe any assumptions that you used.
3. Provide copies of any technical information and/or data you used that support your views.
4. If you estimate potential burden or costs, explain how you arrived at the estimate that you provide.
5. Provide specific examples to illustrate your concerns.
6. Offer alternative ways to improve the notice.
7. Make sure to submit your comments by the deadline in this document.
8. To ensure proper receipt by EPA, be sure to identify the docket control number assigned to this action in the subject line on the first page of your response. You may also provide the name, date, and **Federal Register** citation.

II. Background

Monsanto Company has applied to amend/extend their EUP number 524–EUP–93 (see the **Federal Register** of July 27, 2001 (66 FR 39163) (FRL–6791–5)) to allow for additional testing until February 28, 2003 on up to 9,400 acres in Alabama, Arkansas, California, Colorado, Delaware, Florida, Georgia, Hawaii, Idaho, Illinois, Indiana, Iowa, Kansas, Kentucky, Louisiana, Maryland, Michigan, Minnesota, Mississippi, Missouri, Montana, Nebraska, New Mexico, New York, North Carolina, North Dakota, Ohio, Oklahoma, Pennsylvania, Puerto Rico, South Dakota, Tennessee, Texas, Utah, Virginia, and Wisconsin.

III. What Action is the Agency Taking?

Following the review of the Monsanto Company application and any comments and data received in response to this notice, EPA will decide whether to issue or deny the EUP request for this EUP program, and if issued, the conditions under which it is to be conducted. Any issuance of an EUP will be announced in the **Federal Register**.

IV. What is the Agency's Authority for Taking this Action?

The Agency's authority for taking this action is under 40 CFR part 172.

List of Subjects

Environmental protection, Experimental use permits.

Dated: February 11, 2002.

Janet L. Andersen,

Director, Biopesticides and Pollution Prevention Division, Office of Pesticide Programs.

[FR Doc. 02–4070 Filed 2–19–02; 8:45 am]

BILLING CODE 6560–50–S

ENVIRONMENTAL PROTECTION AGENCY

[OPP–50880A; FRL–6820–3]

Issuance of Experimental Use Permits

AGENCY: Environmental Protection Agency (EPA).

ACTION: Notice.

SUMMARY: EPA has granted experimental use permits (EUPs) to the following pesticide applicants. An EUP permits use of a pesticide for experimental or research purposes only in accordance with the limitations in the permit.

FOR FURTHER INFORMATION CONTACT: *By mail*: Biopesticides and Pollution Prevention Division (7511C), Office of Pesticide Programs, Environmental Protection Agency, 1200 Pennsylvania Ave., NW., Washington, DC 20460.

In person or by telephone: Contact the designated person at the following address at the office location, telephone number, or e-mail address cited in each EUP: 1921 Jefferson Davis Hwy., Arlington, VA.

SUPPLEMENTARY INFORMATION:

I. General Information

A. Does this Action Apply to Me?

This action is directed to the public in general. Although this action may be of particular interest to those persons who conduct or sponsor research on pesticides, the Agency has not attempted to describe all the specific entities that may be affected by this action. If you have any questions regarding the information in this action, consult the designated contact person listed for the individual EUP.

B. How Can I Get Additional Information, Including Copies of this Document and Other Related Documents?

You may obtain electronic copies of this document from the EPA Internet Home Page at *http://www.epa.gov*. On the Home Page select ''Laws and Regulations,'' ''Regulations and Proposed Rules,'' and then look up the entry for this document under the ''**Federal Register**—Environmental Documents.'' You can also go directly to the **Federal Register** listings at http://www.epa.gov/fedrgstr/.

II. EUPs

EPA has issued the following EUPs:

68467–EUP–3, 68467–EUP–5, 29964–EUP–1, and 29964–EUP–3. Issuance. Mycogen Seeds c/o Dow AgroSciences LLC, 9330 Zionsville Road, Indianapolis, IN 46268 and Pioneer Hi-Bred International, Inc., 7250 NW 62nd Avenue, Johnston, IA 50131. The issuance of these EUPs allow the use of the plant-incorporated protectants *Bacillus thuringiensis* 149B1 protein and the genetic material necessary for its production (from the insert of plasmid PHP 14352) in corn and *Bacillus thuringiensis* 149B1 protein and the genetic material necessary for its production (from the insert of plasmid PHP 12560) in corn. Notice of the receipt of application of these EUPs were published in the **Federal Register** on March 7, 2001 (66 FR 13735) (FRL–6770–4). On October 12, 2001, the EUPs were issued. EUPs issued to Mycogen Seeds c/o Dow AgroSciences allowed the planting of 19 acres each of field corn to evaluate the control of Western and Northern corn rootworm; and to do breeding and observation. The Mycogen Seeds' programs are authorized only in the States of Hawaii and the Commonwealth of Puerto Rico. EUPs issued to Pioneer Hi-Bred allowed the planting of 16 acres each of field corn to evaluate the control of Western and Northern corn rootworm; to do breeding and observation, and to do hybrid production for research or regulatory studies. The Pioneer Hi-Bred programs are authorized only in the States of Hawaii and the Commonwealth of Puerto Rico. These EUPs are effective from October 12, 2001 to March 31, 2002. The permits have been issued with the limitation that all treated crops will be genetically contained and destroyed or used for research purposes only. Two comments were received in reply to the **Federal Register** notice announcing receipt of this application. One comment was from a private citizen regarding concerns over organic farming and the viability of Bt sprayables. The other comment was from the National Grain and Feed Association and raised pollen flow, neighboring farm notification, chain of custody, and contracting and disposal issues. These EUPs are of low acreage and given the containment provisions, the chance for pollen transfer to non-149B1 corn is extremely minimal to non-existent. More detailed information, including EPA evaluations and the experimental programs, are available in the public docket for these EUPs, docket control number OPP–50880. (Mike Mendelsohn; Rm. 910W16, Crystal Mall #2; telephone number: (703) 308–8715; e-mail address: *mendelsohn.mike@epa.gov*).

Persons wishing to review these EUPs are referred to the designated contact person. Inquiries concerning these permits should be directed to the persons cited above. It is suggested that interested persons call before visiting the EPA office, so that the appropriate file may be made available for inspection purposes from 8 a.m. to 4 p.m., Monday through Friday, excluding legal holidays.

Authority: 7 U.S.C. 136.

List of Subjects

Environmental protection, Experimental use permits.

Dated: February 8, 2002.

Janet L. Andersen,

Director, Biopesticides and Pollution Prevention Division, Office of Pesticide Programs.

[FR Doc. 02–4072 Filed 2–19–02; 8:45 am]

BILLING CODE 6560–50–S

FEDERAL COMMUNICATIONS COMMISSION

Public Information Collections Approved by Office of Management and Budget

February 11, 2002.

The Federal Communications Commission (FCC) has received Office of Management and Budget (OMB) approval for the following public information collections pursuant to the Paperwork Reduction Act of 1995, Public Law 104–13. An agency may not conduct or sponsor and a person is not required to respond to a collection of information unless it displays a currently valid control number. For further information contact Shoko B. Hair, Federal Communications Commission, (202) 418–1379.

Federal Communications Commission

OMB Control No.: 3060–0973.

Expiration Date: 11/30/2004.

Title: Section 64.11210(e)—Sale or Transfer of Subscriber Base to Another Carrier (CC Dockets 00–257 and 94–129).

Form No.: N/A.

Respondents: Business or other for-profit.

Estimated Annual Burden: 75 respondents; 6 hour per response (avg.); 450 total annual burden hours.

Estimated Annual Reporting and Recordkeeping Cost Burden: $0.

Frequency of Response: On occasion; third party disclosure.

Description: In the First Report and Order in CC Docket No. 00–257 and the Fourth Report and Order in CC Docket No. 94–129 (Fourth Report and Order), the Commission amended section 64.1120 of its rules, as part of its biennial regulatory review effort, to establish a streamlined self-certification process for the carrier-to-carrier sale or transfer of subscriber bases, thereby eliminating the need to obtain a waiver of Commission rules prior to closing a transaction. This process is designed to ensure that the affected subscribers have adequate information about the carrier change in advance, that they are not financially harmed by the change, and that they will experience a seamless transition of service from their original carrier to the acquiring carrier. This

process also will provide the Commission with information it needs to fulfill its consumer protection obligations. Pursuant to 64.1120(e), a telecommunications carrier may acquire, through a sale or transfer, either part or all of another telecommunications carrier's subscriber base without obtaining each subscriber's authorization and verification in accordance with Section 64.1120(c), provided that the acquiring carrier complies with the streamlined procedures set forth in Section 64.1120(e)(1) through (3). a. Section 64.1120(e)(1)–(2), Notification and Certification to the Commission. Pursuant to 47 CFR 64.1120(e)(1)–(3), no later than 30 days before the planned transfer of the affected subscribers from the selling or transferring carrier to the acquiring carrier, the acquiring carrier shall file with the Commission's Office of the Secretary a letter notification in CC Docket No. 00–257 providing the names of the parties to the transaction, the types of telecommunications services to be provided to the affected subscribers, and the date of the transfer of the subscriber base to the acquiring carrier. The acquiring carrier also shall certify compliance with the requirement to provide advance subscriber notice in accordance with 47 CFR 64.1120(e)(3). In addition, the acquiring carrier shall attach a copy of the notice sent to the affected subscribers. If, subsequent to the filing of the letter notification with the Commission, any material changes to the required information should develop, the acquiring carrier shall file written notification of these changes with the Commission no more than 10 days after the transfer date announced in the prior notification. See 47 CFR 64.1120(e)(1)–(2). (*Number of respondents:* 75; *hours per response:* 1 hour; *total annual burden:* 75 hours). b. Section 64.1120(e)(3), Pre-Transfer Subscriber Notification and Certification to the Commission. Not later than 30 days before the transfer of the affected subscribers from the selling or transferring carrier to the acquiring carrier, the acquiring carrier shall provide written notice to each affected subscriber of the information specified in 47 CFR 64.1120(e)(3). (*Number of respondents:* 75; *hours per response:* 5 hours; *total annual burden:* 75 hours). The information will be used to implement Section 258 of the Communications Act of 1934, as amended. The information will expedite procedures for handling the sale or transfer of subscribers, while adequately protecting consumers. Obligation to respond: Required to obtain or retain benefits.

OMB Control No.: 3060–0298.

Expiration Date: 02/28/2005.

Title: Tariffs (Other Than Tariff Review Plan)—Part 61.

Form No.: N/A.

Respondents: Business or other for-profit.

Estimated Annual Burden: 3000 respondents; 45 hours per response (avg.); 135,000 total annual burden hours (for all collections approved under this control number).

Estimated Annual Reporting and Recordkeeping Cost Burden: $2,161,000.

Frequency of Response: On occasion; Annually, Biennially, Third Party Disclosure.

Description: Sections 201, 202, 203, 204 and 205 of the Communications Act of 1934, as amended, 47 U.S.C. 201, 202, 203, 204 and 205, require that common carriers establish just and reasonable charges, practices and regulations for the services they provide. The schedules containing these charges, practices and regulations must be filed with the Commission, which is required to determine whether such schedules are just, reasonable and not unduly discriminatory. Part 61 of the Commission's Rules establishes the procedures for filing tariffs which contain the charges, practices and regulations of the common carriers, supporting economic data and other related documents. The supporting data must also conform to other parts of the Rules such as Parts 36 and 69. Part 61 prescribes the framework for the initial establishment of and subsequent revisions to tariffs. Tariffs that do not conform to Part 61 requirements may be rejected. In addition to tariffs filed with the Commission, carriers may be required to post their schedules or rates and regulations. See 47 CFR 61.72. On April 27, 2001, the Commission released the Seventh Report and Order (i.e., the CLEC Access Order) in CC Docket No. 96–262, which limited the application of the Commission's tariff rules to interstate access services provided by nondominant local exchange carriers (i.e., competitive local exchange carriers (CLECs)). Pursuant to the CLEC Access Order, CLEC access rates that are at or below a benchmark set by the Commission will be presumed to be just and reasonable and may be imposed by tariff. Above the benchmark, CLEC access services will be mandatorily detariffed. The practical effect of the CLEC Access Order is that some CLECs will need to revise their existing tariffs to bring their rates into line with the benchmark. CLECs will need to follow similar procedures on an annual basis for the next three years, as the benchmark declines pursuant to a schedule adopted by the Commission. The information collected through a carrier's tariff is used by the Commission to determine whether the services offered are just and reasonable as the Act requires. The tariffs and any supporting documentation are examined in order to determine if the services are offered in a just and reasonable manner. Obligation to respond: Mandatory.

OMB Control No.: 3060–0989.

Expiration Date: 11/30/2004.

Title: Procedures for Applicants Requiring Section 214 Authorization for Domestic Interstate Transmission Lines Acquired through Corporate Control.

Form No.: N/A.

Respondents: Business or other for-profit.

Estimated Annual Burden: 25 respondents; 65 hour per response (avg.); 1625 total annual burden hours.

Estimated Annual Reporting and Recordkeeping Cost Burden: $20,375.

Frequency of Response: On occasion.

Description: In a Public Notice (DA 01–1654), released 7/20/01, the Commission announced procedures for common carriers requiring authorization under section 214 of the Communications Act of 1934, as amended to acquire domestic interstate transmission lines through an acquisition of control. Under section 214, carriers must obtain Commission approval before constructing, acquiring, or operating an interstate transmission line. 47 CFR 63.01 confers blanket authority under section 214 for common carriers to construct, acquire, and operate domestic transmission lines without prior Commission approval. This blanket authority, however, expressly does not apply when there is a transfer of interstate lines resulting from an acquisition of corporate control.

Pursuant to the Public Notice, domestic section 214 applications involving acquisitions of corporate control, at a minimum, should specify: (1) A description of the transaction and the parties involved; (2) the type of services the parties provide and the locations where those services are provided; (3) any applications pending or to be filed with the FCC that relate to the same transaction; (4) a copy of the relevant merger agreement, if any; and (5) a statement as to how granting the application will serve the public convenience and necessity, taking into account any adverse effect on competition in any relevant market. In all instances, applications for domestic section 214 authority involving

acquisitions of corporate control should identify the application as one for ''domestic'' service in the cover letter of the first page of the applications. All domestic section 214 applications involving acquisitions of corporate control must be accompanied by the relevant filing fee, and a certification pursuant to FCC Rules 1.2001 through 1.2003 that no party to the application is subject to a denial of Federal benefits pursuant to section 5301 of the Anti-Drug Abuse Act of 1988 (21 U.S.C. Sec. 853(a)). See 47 CFR 1.1105 (fee schedule); 1.2001–2003 (Anti-Drug Abuse certification). After an applicant files an application, interested third parties may file comments on or before a due date set forth by the FCC or Common Carrier Bureau (Bureau) in a Public Notice. The information will be used to ensure that applicants comply with the requirements of 47 U.S.C. 214. Obligation to respond: Required to obtain or retain a benefit.

OMB Control No.: 3060–0391.

Expiration Date: 2/28/2005.

Title: Program to Monitor the Impacts of the Universal Service Support Mechanisms, CC Docket Nos. 98–202, 96–45.

Form No.: N/A.

Respondents: Business or other for-profit.

Estimated Annual Burden: 1439 respondents; 40 minutes to 1.5 hours per response (avg.); 1716 total annual burden hours.

Estimated Annual Reporting and Recordkeeping Cost Burden: $0.

Frequency of Response: Annually.

Description: Both now and prior to the Telecommunications Act of 1996, the Commission has taken steps to promote universal access to telephone service. In 1987, the Commission, acting on the recommendation of the Separations Joint Board, adopted a monitoring program to address universal service and separations issues raised in CC Docket No. 80–286. Because that monitoring program (and the Monitoring Reports derived from the program) integrated information from all fifty states, Commission and state staff worked closely to prepare accurate and useful analyses. The Monitoring Reports have been and continue to be widely used by the public, state commissions, and industry because they provide valuable information on universal service support in all states. Currently the monitoring program consists of one item. Information on network usage and growth: This information is generally maintained by all companies that settle their accounts with the National Exchange Carriers Association (NECA) on a cost basis. This information is collected by NECA. The data collected are: local dial equipment minutes, intrastate toll dial equipment minutes, interstate toll dial equipment minutes, total dial equipment minutes, interstate dial equipment minute factors, and interstate access minutes. The monitoring program is necessary for the Commission, the Joint Board, Congress, and the general public to assess the impact of the new universal service support mechanisms. Failure to implement the program would make it impossible to determine the impact of these mechanisms and to assure that the implementation of section 254 fulfills the intent of Congress and furthers the public interest. Obligation to respond: Mandatory.

Public reporting burden for the collections of information are as noted above. Send comments regarding the burden estimates or any other aspect of the collections of information, including suggestions for reducing the burden to Performance Evaluation and Records Management, Washington, DC 20554.

Federal Communications Commission.

William Caton,

Acting Secretary.

[FR Doc. 02–4002 Filed 2–19–02; 8:45 am]

BILLING CODE 6712–01–U

FEDERAL MARITIME COMMISSION

Notice of Agreement(s) Filed

The Commission hereby gives notice of the filing of the following agreement(s) under the Shipping Act of 1984. Interested parties can review or obtain copies of agreements at the Washington, DC offices of the Commission, 800 North Capitol Street, NW., Room 962. Interested parties may submit comments on an agreement to the Secretary, Federal Maritime Commission, Washington, DC 20573, within 10 days of the date this notice appears in the **Federal Register**.

Agreement No.: 011677–004.

Title: United States Australasia Agreement.

Parties: Australia-New Zealand Direct Line, CMA CGM, S.A., Contship Containerlines, Hamburg-Sud, P&O Nedlloyd Limited, Wallenius Wilhelmsen Lines AS.

Synopsis: The proposed agreement modification would extend for two months the parties' existing trade participation program.

By Order of the Federal Maritime Commission.

Dated: February 14, 2002.

Bryant L. VanBrakle,

Secretary.

[FR Doc. 02–4080 Filed 2–19–02; 8:45 am]

BILLING CODE 6730–01–P

FEDERAL MARITIME COMMISSION

Ocean Transportation Intermediary License; Applicants

Notice is hereby given that the following applicants have filed with the Federal Maritime Commission an application for license as Non-Vessel Operating Common Carrier and Ocean Freight Forwarder—Ocean Transportation Intermediary pursuant to section 19 of the Shipping Act of 1984 as amended (46 U.S.C. app. 1718 and 46 CFR part 515).

Persons knowing of any reason why the following applicants should not receive a license are requested to contact the Office of Transportation Intermediaries, Federal Maritime Commission, Washington, DC 20573.

Non-Vessel Operating Common Carrier Ocean Transportation Intermediary Applicants:

Future Maritime Group Inc., 26–15 Parsons Blvd., Unit F, Flushing, NY 11354, *Officers:* Hong Li Han, Vice President, (Qualifying Individual), Shen Yong Zhen, Director.

Spartan Shipping, Inc., 1890 NW 82 Avenue, Suite 110, Miami, FL 33126, *Officer:* Dennis J. Bauman, President, (Qualifying Individual).

Fleischer Freight Services, Inc., 930 W. Hyde Park Blvd., Inglewood, CA 90302, *Officers:* Richard G. Fleischer, Jr., President, (Qualifying Individual), Jacqueline Ann Fleischer, Secretary.

Cala Distribution, L.C., 2279 NW 102 Place, Miami, FL 33172–2523, *Officer:* Ana J. Martinez, Asst. Manager, (Qualifying Individual).

ITLC Corporation, 17337 Ventura Blvd., Suite 200, Encino, CA 91316, *Officer:* Iouri Zdjanski, President, (Qualifying Individual).

Nick International Shipping Inc., dba Olimpia Sandoval, 1841 Carter Avenue, Bronx, NY 10457, *Officers:* Olimpia Sandoval, President, (Qualifying Individual), Nicholas Sandoval, Vice President.

Inter-Cargo, Inc., 1990 NW 95th Avenue, Miami, FL 33172, *Officers:* Flora B. Bofill, President, (Qualifying Individual), Ariana M. Kumpis, Vice President.

Olympiad Line, LLC., PO Box 52, 173 Route 526, Imlaystown, NJ 08526, *Officers:* Wally Kopec, President, (Qualifying Individual), Anthony Marco, Secretary.

Non-Vessel Operating Common Carrier and Ocean Freight Forwarder Transportation Intermediary Applicants

Advanced Global Logistics, LLC, 535 West 34th Street, New York, NY 10001, *Officers:* Michael B. Deitchman, President, (Qualifying Individual), Arthur Solomon, Vice President.

Unitex International Forwarding (HK) Ltd., Room 1505, Premier Center, 20 Cheung Shun St, Cheung Sha Wan-Kowloon, Hong Kong S.A.R. China, *Officers:* Zsang Hing Kwan, Director, (Qualifying Individual), Ngo Kit Wan, Director.

Ocean Freight Forwarder—Ocean Transportation Intermediary Applicant

Alpha Freight & Transport International Inc., 7270 NW 12th Street, Suite 620, Miami, FL 33126, *Officers:* Vilma Martinez, Secretary, (Qualifying Individual), Luis F. Ahumada, President.

Dated: February 14, 2002.

Bryant L. VanBrakle,

Secretary.

[FR Doc. 02–4079 Filed 2–19–02; 8:45 am]

BILLING CODE 6730–01–P

FEDERAL RESERVE SYSTEM

Formations of, Acquisitions by, and Mergers of Bank Holding Companies

The companies listed in this notice have applied to the Board for approval, pursuant to the Bank Holding Company Act of 1956 (12 U.S.C. 1841 *et seq.*) (BHC Act), Regulation Y (12 CFR Part 225), and all other applicable statutes and regulations to become a bank holding company and/or to acquire the assets or the ownership of, control of, or the power to vote shares of a bank or bank holding company and all of the banks and nonbanking companies owned by the bank holding company, including the companies listed below.

The applications listed below, as well as other related filings required by the Board, are available for immediate inspection at the Federal Reserve Bank indicated. The application also will be available for inspection at the offices of the Board of Governors. Interested persons may express their views in writing on the standards enumerated in the BHC Act (12 U.S.C. 1842(c)). If the proposal also involves the acquisition of a nonbanking company, the review also includes whether the acquisition of the nonbanking company complies with the standards in section 4 of the BHC Act (12 U.S.C. 1843). Unless otherwise noted, nonbanking activities will be conducted throughout the United States. Additional information on all bank holding companies may be obtained from the National Information Center website at www.ffiec.gov/nic/.

Unless otherwise noted, comments regarding each of these applications must be received at the Reserve Bank indicated or the offices of the Board of Governors not later than March 15, 2002.

A. Federal Reserve Bank of Philadelphia (Michael E. Collins, Senior Vice President) 100 North 6th Street, Philadelphia, Pennsylvania 19105–1521:

1. Caixa Geral de Depositos, SA, Lisbon, Portugal and CGD USA Holding Company, Inc., New York, New York; to become bank holding companies by acquiring 51 percent of the voting shares of Crown Bank, National Association, Ocean City, New Jersey.

B. Federal Reserve Bank of St. Louis (Randall C. Sumner, Vice President) 411 Locust Street, St. Louis, Missouri 63166–2034:

1. First Staunton Bancshares, Inc., Staunton, Illinois; to acquire 100 percent of the voting shares of Hamel Bancorp, Inc., Hamel, Illinois, and thereby indirectly acquire Hamel State Bank, Hamel, Illinois.

C. Federal Reserve Bank of San Francisco (Maria Villanueva, Consumer Regulation Group) 101 Market Street, San Francisco, California 94105–1579:

1. Wells Fargo & Company, San Francisco, California; to acquire 100 percent of Tejas Bancshares, Inc., Amarillo, Texas, and thereby indirectly acquire Tejas Force, Inc., Wilmington, Delaware, and The First National Bank of Amarillo, Amarillo, Texas.

Board of Governors of the Federal Reserve System, February 13, 2002.

Robert deV. Frierson,

Deputy Secretary of the Board.

[FR Doc. 02–4006 Filed 2–19–02; 8:45 am]

BILLING CODE 6210–01–S

GENERAL SERVICES ADMINISTRATION

Office of Civil Rights; Title VI of the Civil Rights Act of 1964; Limited English Proficiency Policy Guidance for Recipients of Federal Financial Assistance

AGENCY: General Services Administration.

ACTION: Notice of policy guidance with request for comment.

SUMMARY: The General Services Administration (GSA) is republishing for additional public comment, policy guidance on Title VI's prohibition against national origin discrimination as it affects limited English proficient persons.

DATES: *Effective date:* This guidance was effective January 17, 2001. *Comment due date:* Comments must be submitted on or before March 22, 2002. GSA will review all comments and will determine what modifications to the policy guidance, if any, are necessary.

ADDRESSES: Interested persons should submit written comments to the Office of Civil Rights (AK), Room 5127, General Services Administration, 1800 F Street, NW., Washington, DC 20405. Comments may also be submitted by e-mail at *evelyn.britton@gsa.gov,* or facsimile at 202–219–3369.

FOR FURTHER INFORMATION CONTACT: James M. Taylor or K. Evelyn Britton, Office of Civil Rights, Room 5127, General Services Administration, 1800 F Street, NW., Washington, DC 20405, telephone 202–501–0767 or 1–800–662–6376; TDD 1–888–267–7660. Arrangements to receive the policy guidance in an alternative format may be made by contacting the named individuals.

SUPPLEMENTARY INFORMATION: Title VI of the Civil Rights Act of 1964, 42 U.S.C. 2000d, *et seq.* and its implementing regulations provide that no person shall be subjected to discrimination on the basis of race, color, or national origin under any program or activity that receives Federal financial assistance. The purpose of this policy guidance is to clarify the responsibilities of recipients of Federal financial assistance from GSA (''recipients''), and assist them in fulfilling their responsibilities to limited English proficient (LEP) persons, pursuant to Title VI of the Civil Rights Act of 1964 and implementing regulations. This document was originally published on January 17, 2001. (See 66 FR 4026.) The document was based on the policy guidance issued by the Department of Justice entitled ''Enforcement of Title VI of the Civil Rights Act of 1964—National Origin Discrimination Against Persons with Limited English Proficiency'' (65 FR 50123, August 16, 2000). On October 26, 2001, and January 11, 2002, the Assistant Attorney General for Civil Rights issued to Federal departments and agencies guidance memoranda, which reaffirmed the Department of Justice's commitment to ensuring that federally assisted programs and activities fulfill their LEP responsibilities and which clarified and answered certain questions raised

regarding the August 16th publication. GSA is presently reviewing its original January 17, 2001, publication in light of these clarifications to determine whether there is a need to clarify or modify the January 17th guidance. In furtherance of those memoranda, GSA is republishing its guidance for the purpose of obtaining additional public comment. The text of the complete guidance document appears below.

Dated: February 13, 2002.

Madeline Caliendo,

Associate Administrator, Office of Civil Rights, General Services Administration.

Policy Guidance

1. *Subject.* Limited English proficiency policy guidance for recipients of Federal financial assistance

2. *Purpose.* General Services Administration (GSA) provides this policy guidance for its recipients of Federal financial assistance to ensure meaningful access to federally assisted programs and activities for persons with Limited English Proficiency (LEP). This policy guidance does not create new obligations, but rather, clarifies existing responsibilities under Title VI of the Civil Rights Act of 1964, as amended, its implementing regulations and relevant case law.

3. *Dates.* This guidance was effective January 17, 2001. Comments must be submitted on or before March 22, 2002. GSA will review all comments and will determine what modifications to the policy guidance, if any, are necessary.

4. *Policy.* To improve access to federally assisted programs and activities for persons who, as a result of national origin, are limited in their English proficiency.

5. *Action Required.* All recipients of Federal financial assistance from GSA are to develop an effective plan, in writing, for ensuring meaningful access to their programs and activities by LEP persons, consistent with this guidance.

6. *Background Information.* English is the predominant language of the United States. According to the 1990 Census, English is spoken by 95% of its residents. Of those U.S. residents who speak languages other than English at home, the 1990 Census reports that 57% above the age of four speak English ''well to very well.''

The United States is also home to millions of national origin minority individuals who are LEP. That is, their primary language is not English and they cannot speak, read, write or understand the English language at a level that permits them to interact effectively with recipients of Federal financial assistance. Because of language differences and the inability to effectively speak or understand English, persons with LEP may be subject to exclusion from programs or activities, experience delays or denials of services/benefits, or receive care and services/benefits from recipients of Federal financial assistance based on inaccurate or incomplete information.

Executive Order 13166 (65 FR 50119) dated August 11, 2000 and policy guidance issued by Department of Justice (DOJ) on August 11, 2000 (65 FR 50123), address the responsibility of all recipients of Federal financial assistance to ensure meaningful access for persons with LEP. GSA refers to and incorporates DOJ's policy guidance for recipients as part of this policy guidance, and for the purpose of determining compliance with this policy guidance, within the scope of Title VI of the Civil Rights of 1964, as amended, its implementing regulations and relevant case law.

This policy guidance establishes a four-step process that recipients should follow in developing an effective LEP assistance plan. A key element in this process is stakeholder input. Therefore, recipients should coordinate with local community-based organizations (*i.e.,* stakeholders) that represent populations of LEP persons. These organizations can provide valuable input and assistance in identifying and addressing the LEP needs of the serviced population. This coordinated effort will assist in developing a practical approach in providing appropriate LEP assistance that is reasonable and cost-effective.

Some organizations representing LEP persons may include the National Council of La Raza (NCLR), the League of United Latin American Citizens (LULAC), the National Council of Asian Pacific Americans (NCAPA), the Organization of Chinese Americans (OCA), the National Congress of American Indians (NCAI), the National Urban League (NUL), the National Association for the Advancement of Colored People (NAACP), Mexican American Legal Defense and Educational Fund, Arab American Anti-Discrimination Committee and National Coalition for Haitian Rights. This is not meant to be an exhaustive listing, and different community-based or national origin minority organizations may be available in a recipient's serviced area.

7. *Legal Authority.* The legal authority for the Office of Civil Right's (OCR's) enforcement actions is Title VI of the Civil Rights Act of 1964, GSA's implementing regulations, and a consistent body of case law, and is further described below.

Section 601 of Title VI of the Civil Rights Act of 1964, 42 U.S.C. section 2000d *et seq.* states: ''No person in the United States shall on the ground of race, color or national origin, be excluded from participation in, be denied the benefits of, or be subjected to discrimination under any program or activity receiving Federal financial assistance.''

State and local laws may provide additional obligations to serve LEP individuals, but cannot compel recipients of Federal financial assistance to violate Title VI. For instance, given our constitutional structure, State or local ''English-only'' laws do not relieve an entity that receives Federal funding from its responsibilities under Federal anti-discrimination laws. Entities in States and localities with ''English-only'' laws are certainly not required to accept Federal funding—but if they do, they have to comply with Title VI, including its prohibition against national origin discrimination by recipients of Federal assistance. Thus, failing to make federally assisted programs and activities accessible to individuals who are LEP will, in certain circumstances, violate Title VI.

GSA's implementation regulations provide, in part, at 41 CFR 101–6.204–1:

> ''No person in the United States shall, on the ground of race, color, or national origin, be excluded from participation in, be denied the benefits of, or be otherwise subjected to discrimination under any program to which this subpart applies.''

Specific discriminatory actions prohibited are addressed at 41 CFR 101–6.204–2:

> ''(a)(1) In connection with any program to which this subpart applies, a recipient may not, directly or through contractual or other arrangements, on the ground of race, color, or national origin:
>
> (i) Deny an individual any services/benefits, financial aid, or other benefit provided under the program;
>
> (ii) Provide any service, financial aid, or other benefit to any individual which is different, or is provided in a different manner, from that provided to others under the program;
>
> (iii) Subject an individual to segregation or separate treatment in any matter related to his receipt of any service, financial aid, or other benefit under the program;
>
> (iv) Restrict an individual in any way in the enjoyment of any advantage or privilege enjoyed by others receiving any service, financial aid, or other benefit under the program;
>
> (v) Treat an individual differently from others in determining whether he satisfies any admission, enrollment, quota, eligibility, membership or other requirement or condition which individuals must meet in order to be provided any service, financial

aid, or other benefit provided under the program;

(vi) Deny an individual an opportunity to participate in the program through the provision of services or otherwise, or afford him an opportunity to do so which is different from that afforded others under the program* * *''

Furthermore, the DOJ coordination regulations for Title VI, located at 28 CFR 42.405(d)(1), provide that:

''(1) Where a significant number or proportion of the population eligible to be served or likely to be directly affected by a federally assisted program (e.g., affected by relocation) needs service or information in a language other than English in order effectively to be informed of or to participate in the program, the recipient shall take reasonable steps, considering the scope of the program and the size and concentration of such population, to provide information in appropriate languages to such persons. This requirement applies with regard to written material of the type which is ordinarily distributed to the public.''

Extensive case law affirms the obligation of recipients of Federal financial assistance to ensure that persons with LEP can meaningfully access federally assisted programs. Specifically, in the case of *Lau* v. *Nichols,* 414 U.S. 563 (1974), the U.S. Supreme Court ruled that a public school system's failure to provide English language instruction to students of Chinese ancestry who do not speak English denied the students a meaningful opportunity to participate in a public educational program in violation of Title VI of the Civil Rights Act of 1964.

More recently, the Eleventh Circuit in *Sandoval* v. *Hagan,* 197 F.3d 484 (11th Cir. 1999), cert. granted sub. Nom., Alexander v. Sandoval, 147 L. Ed. 2d 1051 (U.S. Sept. 26, 2000) (No. 99–1908), held that the State of Alabama's policy of administering a driver's license examination in English only was a facially neutral practice that had an adverse effect on the basis of national origin, in violation of Title VI. Title VI regulations prohibit both intentional discrimination and policies and practices that appear neutral but have a discriminatory effect. Thus, a recipient's policies or practices regarding the provision of benefits and services to persons with LEP need not be intentional to be discriminatory, but may constitute a violation of Title VI where they have an adverse effect on the ability of national origin minorities to meaningfully access programs and services.

The DOJ states in its policy guidance that Title VI does not require recipients to remove language barriers when English is an essential aspect of the program, or there is another ''substantial legitimate justification for the challenged practice.'' See Footnote 13 of DOJ's policy guidance.

8. *Federal Financial Assistance Programs.* GSA administers two major Federal financial assistance programs, in addition to other programs of Federal financial assistance, such as the direct transfer of personal property and the allotment of space in GSA buildings. The two major programs of Federal financial assistance are the Federal Surplus Personal Property Donation Programs and the Disposal of Federal Surplus Real Property for Public Use.

a. *Federal Surplus Personal Property Donation Program.* Enables certain non-Federal agencies, institutions, organizations and certain small businesses to obtain property that the Federal Government no longer needs. The personal property includes all types and categories of property, such as hand and machine tools, office machines and supplies, furniture, appliances, medical supplies, hardware, clothing, motor vehicles, boats, airplanes, construction equipment, textiles, communications and electronic equipment and gifts or decorations given to Government officials by foreign dignitaries.

(1) Federal surplus personal property may be donated to nonprofit educational and public health activities exempt from taxation under Section 501 of the Internal Revenue Code. The property must be used to aid education or public health, and includes programs for the homeless. Eligible recipients include nonprofit educational and public health activities, such as medical institutions, hospitals, clinics, health centers, and drug abuse treatment centers; schools, colleges and universities; schools for persons with mental or physical disabilities; child care centers; educational radio and televisions licensed by the Federal Communications Commission; museums attended by the public; and libraries. Nonprofit, tax-exempt organizations that provide food, shelter, or support services to homeless people may also be eligible to receive surplus property through the donation program (i.e., soup kitchens, day centers for the homeless, food banks, shelters for battered spouses, half-way houses).

(2) Additionally, public agencies involved in such activities as conservation, economic development, education, park and recreation programs, public safety, public health, programs for the elderly, and programs for the homeless may be eligible for donations of surplus personal property. Public agencies generally include States, their departments, divisions and other instrumentalities; political subdivisions of States, including cities, counties, and other local Government units and economic development districts; instrumentalities created by compact or other agreement between State or political subdivisions; and Indian tribes, bands, groups, pueblos, or communities located on State reservations.

b. *Disposal of Federal Surplus Real Property for Public Use.* Under existing Federal law, States and local government bodies and certain nonprofit institutions may acquire Federal surplus real property at discounts of up to 100% for various types of public use. These uses include: homeless services, airports/ports, correctional, educational, historic monument, parks/recreation, public health and wildlife conservation. These disposals are usually accomplished in coordination with other Federal agencies (i.e., Department of Education (DOE), Department of Health and Human Services (DHHS), Department of Transportation (DOT), Department of Interior (DOI), Department of Housing and Urban Development (HUD).

c. *GSA Personal Property Utilization Program.* Government regulations mandate that Federal agencies, to the fullest extent practicable, use excess personal property as the first source of supply in meeting their requirements. However, certain laws provide Federal agencies with the ability to directly transfer certain excess property to non-Federal entities. For example, Executive Order 12999 (61 FR 17227, 3 CFR, 1996 comp., p. 180) provides that all Federal agencies, to the extent permitted by law, shall give highest preference to schools and nonprofit organizations, including community-based educational organizations, in the transfer of educationally useful Federal equipment. Thus, GSA recipients in this program include schools and certain community-based educational organizations.

d. *Allotment of Space.* Under existing Federal law, GSA may allot space for little or no costs to Federal Credit Unions, vending stands operated by blind persons and child care centers.

9. *Definition of Terms.* The following definitions are provided for reference.

a. *Federal financial assistance:* Grants and loan of Federal funds; grants or donation of Federal property and interests in property; detail of Federal personnel; sale and lease of, and the permission to use (on other than a casual or transient basis) Federal property or any interest in the property without consideration or at a nominal consideration, or at a consideration which is reduced for the purposes of assisting the recipient, or in recognition

of the public interest to be served by the sale or lease to the recipient; or any Federal agreement, arrangement, or other contract which has as one of its purposes the provision of assistance.

b. *Recipient:* Any State or political subdivision, any instrumentality of a State or political subdivision, any public or private agency, institution, organization, or other entity, or any person to which Federal financial assistance is extended, directly or through another recipient, except that such term does not include any ultimate beneficiary of the assistance.

c. *Person with Limited English Proficiency:* A person whose primary language is not English and whose ability to speak, read, write or understand the English language does not permit effective interaction with recipients of Federal financial assistance.

d. *Vital Documents:* A document or information will be considered vital if it contains information that is critical for accessing the recipient's program(s) and/or activities, or is required by law. Thus, vital documents include, for example, applications; consent forms; letters and notices pertaining to the reduction, denial or termination of services or benefits; and letters or notices that require a response from the beneficiary or client. Generally, entire web sites need not be translated. Only the vital information or documents within the web site should be translated. See subparagraph 11b(3) below for further discussion about web sites.

e. *Beneficiary:* Individuals and/or entities that directly or indirectly receive an advantage through the operation of a Federal program, (i.e., one who is within the serviced population of the recipient of Federal financial assistance and who ultimately benefits from those services.)

10. *LEP Procedures and Guidelines.* Executive Order 13166 (65 FR 50119) provides for a flexible standard stating that recipients of Federal financial assistance are to take reasonable steps to ensure meaningful access to their programs and activities by LEP persons. Thus, it is important that all recipients take the following steps in determining their LEP responsibilities and providing appropriate LEP assistance. These four steps are more fully explained below, and include: (1) Conduct an assessment of the serviced population, (2) develop written LEP assistance plans, (3) implement the LEP plan, and (4) monitor the effectiveness of the LEP plan.

a. *Step 1.* Conduct an assessment of the serviced population. This assessment includes identifying the types of service(s) being provided by the recipient and determining the serviced population (i.e., individuals served by the recipient's program(s) and activities).

b. *Step 2.* Develop written LEP assistance plans. These plans should address the recipient's LEP responsibilities and the types of LEP assistance that the recipient will provide, consistent with this policy guidance. Recipients are to develop a written plan based on a balanced analysis of the following four factors, to ensure meaningful access for eligible LEP persons.

(1) *Factor 1: Number or Proportion of LEP Persons.* One factor in determining the reasonableness of a recipient's efforts in providing LEP assistance is the number or proportion of people who will be excluded from the benefits or services absent efforts to remove language barriers. The key here is to focus on persons who are eligible to access the recipient's program or activity.

The steps reasonable for a recipient that serves one LEP person a year may be different than those expected of a recipient that serves several LEP persons per day. However, those who serve a few are still subject to the requirements of Title VI of the Civil Rights Act of 1964 and Executive Order 13166 (65 FR 50119). This plan need not be intricate, and may be as simple as being prepared to use one of the commercially available language lines to obtain interpreter services within a reasonable period of time.

Methods of obtaining estimates of serviced LEP population include taking a census of contacts with LEP persons over a given period of time or using demographic data of the service area. The 1990 U. S. Census information may be found at a local library or on the Internet at www.Census.gov. The 2000 Census data may not be available until the 2001–02 timeframe. In addition to the U. S. Census, other potential resources include State and local government offices; the Mayor's office; the local school superintendent's office; the State education department; the State social services department, and local hospitals; or other elected officials offices. Combining these methods will probably result in the most realistic and accurate estimates.

Local or State Yellow Pages may also be helpful in identifying organizations that serve or represent particular language minority populations. Local national origin minority organizations may be able to provide, or assist in obtaining, certain demographic information regarding LEP populations in the local area. The information that can be obtained and the network established in coordinating this type of effort with members of local and State government offices and minority organizations may prove to be valuable resources for recipients into the future.

(2) *Factor 2: Frequency of Contact with the Program.* Frequency of contacts between the recipient's program or activity and LEP persons is another factor to be weighed. For example, if LEP persons must access the program or activity on a daily basis, the recipient has a greater LEP responsibility than if such contact is unpredictable or infrequent. Recipients should take into account local or regional conditions when determining frequency of contact.

Although past experience may be helpful in determining the frequency of contact, it should not be used as the exclusive criteria since the lack of prior LEP notice and assistance may have contributed to such minimal or non-existent contact.

(3) *Factor 3: Nature and Importance of the Program.* The importance of the services or benefits provided to the beneficiaries will affect the determination of the reasonable steps required. More affirmative steps are required in those programs where the denial or delay of access may have life or death implications than in programs that are not as crucial to one's day-to-day existence. For example, fire protection services are of more importance to the serviced population than access to a museum.

Recipients must also consider the importance of the program or activity to the eligible LEP population, both immediately, as well as the long-term. (*i.e.,* what is the short-term and long-term impact to the LEP population if translation assistance is not provided?)

(4) *Factor 4: Resources Available.* The resources available to a recipient of Federal financial assistance may impact the steps that recipients take. For example, a small recipient with limited resources may not need to take the same steps as a larger recipient to provide LEP assistance in programs that have a limited number of eligible LEP persons or where the contact is infrequent. However, small recipients are still subject to this policy guidance, although the type of LEP mitigation measures may differ from that of larger recipients. Claims of limited resources from larger entities should be well substantiated.

A recipient that has limited resources may consider exploring whether State and local government offices provide translation assistance. These offices may provide resources for the recipient's use.

Also, recipients may consider contacting local minority organizations for possible translation assistance.

c. *Step 3:* Implement the LEP plan. The key to successful implementation of an effective LEP assistance plan is to ensure that the serviced population is notified regarding the availability of free LEP assistance. Also, it is important that a recipient's staff is aware of LEP responsibilities and the recipient's LEP assistance plan.

(1) Notice of LEP assistance to be provided. Each recipient of Federal financial assistance is to notify the public of available LEP assistance at no cost to the LEP person. This may be done through a brochure or poster in the language(s) identified in the location(s) where the recipient's federally assisted service(s) and/or benefits are being provided. Posters should be placed in a conspicuous place to ensure LEP persons will see it. It may also include posting such notice on the recipient's internet site(s). Sample language to use for such notice is as follows: ''Language assistance is available upon request if you cannot speak or write English very well.''

(2) Ensure staff is aware of LEP responsibilities. Recipients are to ensure that GSA's policy regarding LEP responsibilities is communicated to all staff members whose duties may bring them in contact with LEP persons accessing the services and/or benefits of the recipient. This communication should ensure an understanding of the types of LEP assistance being offered by the recipient, and the mechanisms in place for the staff to use when a request for LEP assistance is made.

d. *Step 4:* Monitor the effectiveness of the LEP plan. LEP assistance requirements may change over a period of time. Therefore, it is important to regularly monitor, and when appropriate, adjust the LEP procedures to ensure meaningful access for persons with LEP. New programs, activities, forms, outreach documents, etc. should be considered for translation services as they arise. In addition, to be effective, it is crucial for recipients to re-assess language assistance services at least every three years to determine the effectiveness of existing assistance. This assessment should include a review of LEP policies and procedures (i.e., the LEP plan) with the recipient's staff. Feedback from LEP persons and community-based organizations will also provide helpful insights into the effectiveness of LEP assistance procedures.

11. *Translation Requirements.* In determining what is reasonable, the analysis should address the appropriate mix of written and oral language assistance. This includes information provided using the Internet, video and audio. When applying the four factors as outlined above, decisions should be made regarding which documents must be translated, when is oral translation necessary and whether such assistance (*i.e.,* oral or written translation) should be immediately available or provided within a reasonable period of time.

a. *Oral Communication:* Depending on the need, options for providing oral language assistance range from hiring bilingual staff or on-staff interpreters to contracting for interpreter services as needed, engaging community volunteers, or contracting with a telephone interpreter services. Oral communication between recipients and beneficiaries often is a necessary part of the exchange of information. Proper analysis should include looking at what kind of communication (oral or written) you normally provide to an English speaking person in order to fully communicate the program to them. Thus, there may be instances where simply providing written translation may not be providing meaningful access to persons with LEP in the same manner as that provided to non-LEP beneficiaries.

b. *Written Communication:* As part of its overall language assistance program, a recipient's LEP assistance plan should provide for the translation of certain written materials in languages other than English, where a significant number or percentage of the population eligible to be served or likely to be directly affected by the program, needs services or information in a language other than English to communicate effectively. See 28 CFR 42.405(d)(1).

(1) In determining what should be translated, identify vital documents and non-vital documents. Vital documents must be translated when a significant number or percentage of the population eligible to be served, or likely to be directly affected by the recipient's program(s) or activities, seeks services or information in a language other than English to communicate effectively. For many larger documents, translation of vital information contained within the document will suffice and the documents need not be translated in their entirety. Non-vital documents/information need not be translated.

(2) OCR recognizes that it may sometimes be difficult to draw a distinction between vital and non-vital documents, particularly when considering outreach or awareness documents. Although meaningful access to a program or activity requires an awareness of the program's existence, OCR recognizes that it would be impossible, from a practical and cost-based perspective, to translate every piece of outreach material into every language. Title VI does not require this of its recipients. However, lack of awareness regarding the existence of a particular program may effectively deny LEP persons meaningful access. Thus, it is important that recipients continually survey and assess the needs of the eligible serviced populations in order to determine whether certain critical outreach materials should be translated into other languages.

(3) The same analysis is to be used in determining the translation of web site information, forms, etc. The decision to place a document or information on the Internet will not affect whether the document or information must be translated. For example, placement on the web site should not change the recipient's original assessment regarding the number or proportion of LEP persons that comprise the intended audience for that document or information. Generally, entire web sites need not be translated. Only the vital information or documents within the web site should be translated. The four-factor analysis as outlined above determines the appropriate language(s) for translation. If the four-factor analysis determines that written information or a document should be translated, the same written document or information should be translated on the recipient's web siteu if the recipient's English version of the information or document is on the web site. A notice regarding the presence of a translated document or information on the web site should be posted at an initial entry point onto the site (usually the homepage).

(4) Oral translation assistance will be provided to those persons with LEP whose language does not exist in written form. This oral translation assistance will explain the contents of vital documents.

c. *Reliability of Translation Resources and Interpretive Services:* In order to provide effective services to LEP persons, it is important to ensure the use of competent interpreters. Although it is not a requirement, membership in or accreditation by the American Translators Association (ATA) is one indicator regarding the reliability and professionalism of language assistance vendors. However, competency does not necessarily mean formal certification as an interpreter, although certification is helpful. Yet, competency refers to more than being bilingual. It refers to demonstrated proficiency in both English and the other language, orientation and training that includes

the skills and ethics of interpreting (*i.e.,* issues of confidentiality), fundamental knowledge in both languages of terms or concepts peculiar to the program or activity, and sensitivity to the LEP person's culture.

It is also important to note that in some circumstances, verbatim translation of materials may not accurately and appropriately convey the substance of what is contained in the written language. An effective way to address this concern is to reach out to community-based organizations to review translated materials to ensure that the translation is accurate and easily understood by LEP persons.

It is recommended that a different contractor conduct a second review of a translated document, when such document is of a highly technical or complex nature. Another method of ensuring reliability of such documents is to have the document translated back into English to determine if the source document lost important meaning in its foreign translation.

Generally, it is not acceptable for recipients to rely upon an LEP individual's family members or friends to provide the interpreter services. The recipient should meet its obligations under Title VI by supplying competent language services free of cost. In rare emergency situations, the recipient may have to rely on an LEP person's family members or other persons whose language skills and competency in interpreting have not been established. Proper planning by recipients is important in order to ensure that those situations rarely occur. Therefore, it is not acceptable to rely upon an LEP person to provide his/her own interpreter, unless the LEP person requests the use of his/her own interpreter or in the case of an emergency.

12. *Examples.* The following examples are being provided to facilitate the assessment, planning and implementation of a successful LEP plan.

a. *Examples of problem areas include:* Providing services and/or benefits to LEP persons that are more limited in scope or lower in quality than those provided to other individuals; subjecting LEP persons to unreasonable delays; limiting participation in a recipient's program(s) or activities on the basis of English proficiency; providing services and/or benefits to LEP persons that are not as effective as those provided to persons proficient in English; failing to inform LEP persons of the right to receive free interpreter services; or requiring LEP persons to provide their own interpreter.

b. *Examples of satisfactory LEP assistance include:* Having policies and procedures in place for identifying and assessing the language needs of the recipient's serviced LEP population; providing a range of oral language assistance options, appropriate to each of the recipient's circumstances; providing notice to LEP persons of the right to free language services; communicating LEP responsibilities and available services to staff members; program monitoring; establishing a plan for providing written materials in languages other than English where a significant number or percentage of the affected population needs services or information in a language other than English.

c. *Examples of applying the 4 factors:* The following are examples of how meaningful access will be assessed by OCR:

(1) *Example 1.* A small child care center has three LEP parents (two who are Chinese and one who is Cuban) whose English-speaking children attend its child care center on a regular basis. The center has a staff of six, and has limited financial resources to afford to hire bilingual staff, contract with a professional interpreter service, or translate written documents. To accommodate the language needs of their LEP parents, the Center made arrangements with a Chinese and a Hispanic community organization for trained and competent volunteer interpreters, and with a telephone interpreter language line, to interpret during parent meetings and to orally translate written documents. There have been no client complaints of inordinate delays or other service related problems with respect to LEP clients.

Application of the 4 factors to Example 1: Factor 1: The center has three LEP parents (a small number); *Factor 2:* The frequency of contact is every day, but mostly for greeting; *Factor 3:* The nature and importance of the recipient's program to the serviced population relates to the health, safety and welfare of their children (i.e., child care); *Factor 4:* The child care center has limited resources and a small staff.

The assistance that the child care center is providing will probably be considered appropriate, given the center's resources, the size of staff, and the size of the LEP population. Thus, OCR would find the center in compliance with Title VI.

(2) *Example 2.* A county social service program has a large budget and serves 500,000 beneficiaries. Of the beneficiaries eligible for its services/benefits, 3,500 are LEP Chinese persons, 4,000 are LEP Hispanic persons, 2000 are LEP Vietnamese persons and about 400 are LEP Laotian persons. The county frequently encounters an LEP client, but has no policy regarding language assistance to LEP persons other than telling LEP clients to bring their own interpreters. LEP clients are provided with application and consent forms in English and, if unaccompanied by their own interpreters, must solicit the help of other clients or must return at a later date with an interpreter.

Application of the 4 factors to Example 2: Factor 1: The eligible LEP population is significant; *Factor 2:* The frequency of contact is frequent; *Factor 3:* The nature and importance of the county's program relates to the social welfare of the community it serves; *Factor 4:* The county has a large budget.

Given the size of the county program, its resources, the size of the eligible LEP population, the frequency of contact and the nature of the program, OCR would likely find the county in violation of Title VI and would require it to develop a comprehensive language assistance program.

d. The intent of this guidance is to provide recipients with information regarding the requirements of Title VI and its implementing regulations for providing meaningful access for LEP persons to federally assisted services and/or benefits. The examples and framework outlined above are not intended to be exhaustive. Thus, recipients have considerable flexibility in determining how to comply with their legal obligation in meeting their LEP responsibilities, and are not required to use all of the suggested methods and options listed. However, recipients must establish and implement policies and procedures for providing language assistance sufficient to fulfill their Title VI responsibilities.

13. *Compliance.* All recipients must take reasonable steps (consistent with this policy guidance) to overcome language differences that result in barriers and provide the language assistance needed to ensure that persons with LEP have meaningful access to services and benefits.

a. The failure to take all of the steps as outlined herein will not necessarily mean that a recipient has failed to provide meaningful access to LEP persons. OCR will make assessments on a case by case basis and will consider several factors in determining whether the steps taken by a recipient provide meaningful access. (i.e., nature and importance of recipient's services to the serviced population, recipient's size, availability of financial and other resources, and frequency of contact with LEP persons).

b. Those factors include the size of the recipient and the eligible LEP population, the nature of the program or service, the objectives of the program, the total resources available, the frequency with which particular languages are encountered, and the frequency with which LEP persons come into contact with the recipient's program.

c. There are instances where recipients of Federal financial assistance from GSA may also be recipients of Federal financial assistance from other Federal agencies. For instance, hospitals and health clinics may receive financial assistance from the Department of Health and Human Services (DHHS); schools and universities may receive financial assistance from the Department of Education (DOE); police departments and other law enforcement agencies/organizations may receive financial assistance from the Department of Justice (DOJ). In order to avoid the potential for confusion with such recipient organizations as to their LEP responsibilities, OCR will apply, where appropriate, the Federal agency's LEP guidance that is more specific and/or stringent regarding LEP responsibilities and assistance.

14. *Enforcement.* OCR will enforce Title VI, and the recipient's responsibility to establish LEP procedures and provide appropriate LEP assistance, consistent with enforcement procedures as provided in Title VI regulations. These procedures include complaint investigations, compliance reviews, efforts to secure voluntary compliance, and technical assistance.

GSA's Title VI regulations provide that OCR will investigate whenever it receives a complaint, report or other information that alleges or indicates possible noncompliance with Title VI. If the investigation results in a finding of compliance, OCR will inform the recipient in writing of this determination, including the basis for the determination. If the investigation results in a finding of noncompliance, OCR will inform the recipient of the noncompliance through a Letter of Findings that identifies the areas of noncompliance and the steps that must be taken to correct the noncompliance, and will attempt to secure voluntary compliance through informal means. If the matter cannot be resolved informally, the procedure for effecting compliance as described at 41 CFR 101–6.211–2, *et seq.* will be followed.

15. *Technical Assistance.* A program of language assistance should provide for effective communication between the recipient and the person with LEP so as to facilitate participation in, and meaningful access to the services and/or benefits provided by the recipient. The key to ensuring meaningful access for LEP persons is effective communication.

OCR is available to provide assistance to recipients seeking to ensure that they operate an effective language assistance program. In addition, during its investigative process, OCR is available to provide technical assistance to enable recipients to come into voluntary compliance. OCR may be reached at 202–501–0767 or toll free 1–800–662–6376, or by mail at General Services Administration, Office of Civil Rights, Title VI, 1800 F Street NW., Suite 5127, Washington, DC, 20405, for further assistance. Arrangements to receive this policy guidance in alternative format may be made by contacting OCR.

[FR Doc. 02–4013 Filed 2–19–02; 8:45 am]

BILLING CODE 6820–34–P

DEPARTMENT OF HEALTH AND HUMAN SERVICES

Meeting of the Secretary's Advisory Committee on Regulatory Reform

AGENCY: Office of the Assistant Secretary for Planning and Evaluation, Department of Health and Human Services.

ACTION: Notice of meeting—AMENDED.

SUMMARY: Notice is hereby given of a public hearing by the Department of Health and Human Services (HHS) Secretary's Advisory Committee on Regulatory Reform. This amended notice includes the exact address for the hearing. As governed by the Federal Advisory Committee Act in accordance with Section 10(a)(2), the Secretary's Advisory Committee on Regulatory Reform is seeking guidance for the Department's efforts to streamline regulatory requirements. The Advisory Committee will advise and make recommendations for changes that would be beneficial in four broad areas: health care delivery, health systems operations, biomedical and health research, and the development of pharmaceuticals and other products. The Committee will review changes identified through regional public hearings, written comments from the public, and consultation with HHS staff.

All meetings and hearings of the Committee are open to the general public. During each meeting, invited witnesses will address how regulations affect health-related issues. Meeting agendas will also allow some time for public comment. Additional information on each meeting's agenda and list of participating witnesses will be posted on the Committee's Web site prior to the meetings *(http://www.regreform.hhs.gov).*

DATES: The first public hearing of the Secretary's Advisory Committee on Regulatory Reform will be held on Monday, February 25, 2002, from 9:00 a.m. to 5:00 p.m. and on Tuesday, February 26, 2002, from 9:00 a.m. to 1:00 p.m.

ADDRESSES: The hearing will be held at the Hyatt Regency Miami in Miami, Florida. The address is 400 SE 2nd Avenue, Miami, FL 33131.

FOR FURTHER INFORMATION CONTACT: Christy Schmidt, Executive Coordinator, Secretary's Advisory Committee on regulatory Reform, Office of the Assistant Secretary for Planning and Evaluation, 200 Independence Avenue, SW., Room 344G, Washington, DC, 20201, (202) 401–5182.

SUPPLEMENTARY INFORMATION: The Hyatt Regency Miami is in compliance with the Americans with Disabilities Act. Anyone planning to attend the meeting who requires special disability-related arrangements such as sign-language interpretation should provide notice of their need by Thursday, February 21, 2002. Please make any request to Michael Starkweather—phone: 301–628–3141; fax: 301–628–3101; email: *mstarkweather@s–3.com.*

On June 8, 2001, HHS Secretary Thompson announced a Department-wide initiative to reduce regulatory burdens in health care, to improve patient care, and to respond to the concerns of health care providers and industry, State and local Governments, and individual Americans who are affected by HHS rules. Common sense approaches; and careful balancing of needs can help improve patient care. As part of this initiative, the Department is establishing the Secretary's Advisory Committee on Regulatory Reform to provide findings and recommendations regarding potential regulatory changes. These changes would enable HHS programs to reduce burdens and costs associated with departmental regulations and paperwork, while at the same time maintaining or enhancing the effectiveness, efficiency, impact, and access of HHS programs.

Dated: February 7, 2002.

William Raub,

Deputy Assistant Secretary for Planning and Evaluation.

[FR Doc. 02–3985 Filed 2–19–02; 8:45 am]

BILLING CODE 4151–05–M

DEPARTMENT OF HEALTH AND HUMAN SERVICES

Centers for Disease Control and Prevention (CDC)

Clinical Laboratory Improvement Advisory Committee: Notice of Charter Renewal

This gives notice under the Federal Advisory Committee Act (Pub. L. 92–463) of October 6, 1972, that the Clinical Laboratory Improvement Advisory Committee, of the Centers for Disease Control and Prevention (CDC), of the Department of Health and Human Services, has been renewed for a 2-year period extending through February 19, 2004.

FOR FURTHER INFORMATION CONTACT: Edward L. Baker, M.D., Executive Secretary, Clinical Laboratory Improvement Advisory Committee, CDC, 4770 Buford Hwy, NE, m/s K–36, Atlanta, Georgia 30333. Telephone 770/488–2402, fax 770/488–2420, e-mail *elb1@cdc.gov*.

The Director, Management Analysis and Services Office, has been delegated the authority to sign **Federal Register** notices pertaining to announcements of meetings and other committee management activities, for both the Centers for Disease Control and Prevention and the Agency for Toxic Substances and Disease Registry.

Dated: February 13, 2002.

Alvin Hall,

Acting Director, Management Analysis and Services Office, Centers for Disease Control and Prevention.

[FR Doc. 02–4024 Filed 2–19–02; 8:45 am]

BILLING CODE 4163–18–P

DEPARTMENT OF HEALTH AND HUMAN SERVICES

Centers for Disease Control and Prevention

Board of Scientific Counselors Meeting, National Institute for Occupational Safety and Health: Meeting

In accordance with section 10(a)(2) of the Federal Advisory Committee Act (Pub. L. 92–463), the Centers for Disease Control and Prevention (CDC) announces the following committee meeting:

Name: Board of Scientific Counselors, National Institute for Occupational Safety and Health (BSC, NIOSH).

Time and Date: 9 a.m.—3 p.m., March 7, 2002.

Place: Washington Court Hotel on Capitol Hill, 525 New Jersey Avenue, NW., Washington, DC 20001, telephone 202/628–2100, fax 202/879–7938.

Status: Open to the public, limited only by the space available. The meeting room accommodates approximately 50 people.

Purpose: The Secretary, the Assistant Secretary for Health, and by delegation the Director, Centers for Disease Control and Prevention, are authorized under Sections 301 and 308 of the Public Health Service Act to conduct directly or by grants or contracts, research, experiments, and demonstrations relating to occupational safety and health and to mine health. The Board of Scientific Counselors shall provide guidance to the Director, National Institute for Occupational Safety and Health, on research and preventions programs. Specifically, the Board shall provide guidance on the Institute's research activities related to developing and evaluating hypotheses, systematically documenting findings and disseminating results. The Board shall evaluate the degree to which the activities of the National Institute for Occupational Safety and Health: (1) Conform to appropriate scientific standards, (2) address current, relevant needs, and (3) produce intended results.

Matters to be Discussed: Agenda items include a report from the Acting Director of NIOSH; Update on NIOSH/NCI Diesel Exposure Study; Final Report from the BSC Beryllium Subcommittee; Workplace Violence Prevention Research and Planning; Update on the National Personal Protective Technologies Laboratory.

Agenda items are subject to change as priorities dictate.

FOR MORE INFORMATION CONTACT: Roger Rosa, Executive Secretary, BSC, NIOSH, CDC, 200 Independence Avenue, SW., Room 715H, Washington, DC 20201, telephone: 202/205–7856, fax: 202/260–4464.

The Director, Management Analysis and Services Office, has been delegated the authority to sign **Federal Register** notices pertaining to announcements of meetings and other committee management activities for both the Centers for Disease Control and Prevention and the Agency for Toxic Substances and Disease Registry.

Dated: February 13, 2002.

Alvin Hall,

Acting Director, Management Analysis and Services Office, Centers for Disease Control and Prevention.

[FR Doc. 02–4023 Filed 2–19–02; 8:45 am]

BILLING CODE 4163–19–P

DEPARTMENT OF HEALTH AND HUMAN SERVICES

Centers for Disease Control and Prevention

Public Meeting Between CDC and the Cruise Ship Industry, Private Sanitation Consultants and Other Interested Parties

The National Center for Environmental Health (NCEH) of the Centers for Disease Control and Prevention (CDC) announces the following meeting.

Name: Current Status of the Vessel Sanitation Program (VSP) and Experience to Date with Program Operations—Public meeting between CDC and the cruise ship industry, private sanitation consultants, and other interested parties.

Time and Date: 9 a.m.–1 p.m., April 17, 2002.

Place: Auditorium, Port Everglades Administration Building, 1850 Eller Drive, Fort Lauderdale, Florida 33316. Telephone (954)356–6650; Fax (954)356–6671.

Status: Open to the public, limited by the space available. The meeting room accommodates approximately 100 people.

Purpose: During the past 15 years, as part of the revised VSP, CDC has conducted a series of public meetings with members of the cruise ship industry, private sanitation consultants, and other interested parties.

This meeting is a continuation of that series of public meetings to discuss current status of the VSP and experience to date with program operations.

Matters to be Discussed: Agenda items will include VSP Program Update; 2001 Program Review; Update on the implementation of the VSP Program Operations Manual 2000; Update on Disease Surveillance and Outbreak Investigations; and VSP Training Seminars.

For a period of 15 days following the meeting, through May 2, 2002, the official record of the meeting will remain open so that additional materials or comments may be submitted to be made part of the record of the meeting. Advanced registration for the meeting is encouraged. Please provide the following information: Name, title, company name, mailing address, telephone number, facsimile number and e-mail address to Dorothy Johnson, facsimile (770)488–4127 or e-mail: *DJJohnson@cdc.gov*.

FOR MORE INFORMATION CONTACT: Dave Forney, Chief, VSP, NCEH, CDC, 4770 Buford Highway, NE, M/S F–16, Atlanta, Georgia 30341–3724, telephone (770)488–7333, e-mail: *DForney@cdc.gov*.

The Director, Management Analysis and Services Office, has been delegated the authority to sign **Federal Register** notices pertaining to announcements of meetings and other committee management activities for both the Centers for Disease Control and

Prevention and the Agency for Toxic Substances and Disease Registry.

Dated: February 13, 2002.

Alvin Hall,

Acting Director, Management Analysis and Services Office, Centers for Disease Control and Prevention.

[FR Doc. 02–4022 Filed 2–19–02; 8:45 am]

BILLING CODE 4163–18–P

DEPARTMENT OF HEALTH AND HUMAN SERVICES

Food and Drug Administration

[Docket No. 00N–1571]

Enrofloxacin for Poultry; Notice of Hearing

AGENCY: Food and Drug Administration, HHS.

ACTION: Notice.

SUMMARY: The Food and Drug Administration (FDA) is announcing a hearing on a proposal to withdraw approval of a new animal drug application (NADA). In the **Federal Register** of October 31, 2000 (65 FR 64954), the Director of FDA's Center for Veterinary Medicine (CVM) issued a notice of opportunity for a hearing (NOOH) proposing to withdraw approval of NADA 140–828 for enrofloxacin (Baytril 3.23% Concentrate Antimicrobial Solution). Bayer Corp., the sponsor of the new animal drug, responded by filing a request for a hearing on November 29, 2000.

This notice of hearing (NOH) provides factual and legal information concerning CVM's proposal to withdraw the NADA and identifies the factual issues that will be the subject of the evidentiary hearing.

DATES: A prehearing conference will be held on April 8, 2002, beginning at 10 a.m. Any person wishing to participate in this hearing shall submit a written notice of participation by March 22, 2002. Disclosure of data and information as required by part 12 (21 CFR part 12) must be made by April 22, 2002.

ADDRESSES: The prehearing conference will be held in conference room. F, 5600 Fishers Lane, Rockville, MD 20857. You must submit written notices of participation and disclosure of data and information to Dockets Management Branch (HFA–305), Food and Drug Administration, 5630 Fishers Lane, rm. 1061, Rockville, MD 20852. All submissions must reference docket number 00N–1571.

FOR FURTHER INFORMATION CONTACT: Robin Thomas Johnson, Office of Policy (HF–26), Food and Drug Administration, 5600 Fishers Lane, Rockville, MD 20857, 301–827–3480.

SUPPLEMENTARY INFORMATION:

I. Background

Enrofloxacin belongs to the class of antimicrobial drugs called fluoroquinolones. Fluoroquinolones are used in humans and animals for therapeutic purposes. Bayer Corp., P.O. Box 390, Shawnee Mission, KS 66201–0390, sponsor of NADA 140–828 for enrofloxacin (also known under Bayer's product name ''Baytril'') was approved for use in poultry on October 4, 1996, and published on November 5, 1996 (61 FR 56892). The new animal drug is indicated for the control, in chickens, of mortality associated with *Escherichia coli (E. coli)* susceptible to enrofloxacin. It is indicated for the control, in turkeys, of mortality associated with *E. coli* and *Pasteurella multocida (P. multocida)* susceptible to enrofloxacin.

II. Statutory Grounds Proposed for Withdrawal of the NADA for Enrofloxacin

In the NOOH published on October 31, 2000 (as revised on January 22, 2001), CVM proposed to withdraw approval of NADA 140–828 for use in poultry under section 512(e)(1)(B) of the Federal Food, Drug, and Cosmetic Act (the act) (21 U.S. C. 360b(e)(1)(B)) . Section 512(e)(1)(B) states:

> (e)(1) The Secretary shall, after due notice and opportunity for hearing to the applicant, issue an order withdrawing approval of an application filed pursuant to subsection (b) with respect to any new animal drug if the Secretary finds —
>
> * * * * *
>
> (B) that new evidence not contained in such application or not available to the Secretary until after such application was approved, or tests by new methods, or tests by methods not deemed reasonably applicable when such application was approved, evaluated together with the evidence available to the Secretary when the application was approved, shows that such drug is not shown to be safe for use under the conditions of use upon the basis of which the application was approved or that subparagraph (I) of paragraph (1) of subsection (d) applies to such drug.

CVM must provide a reasonable basis from which serious questions about the ultimate safety of the drug may be inferred. "'Serious questions' can be raised where the evidence is not conclusive, but merely suggestive of an adverse effect.'' (See 44 FR 54852 at 54861, September 21, l979 (Commissioner's DES Decision.) Once CVM provides a basis for questioning the safety of enrofloxacin, the sponsor will have the ultimate burden of showing the drug's safety. *See Rhone-Poulenc, Inc., Hess & Clark Div.* v. *FDA*, 636 F.2d 750 (D.C. Cir. 1980); 21 CFR 12.87(d); 44 FR 54852 at 54861, September 21, l979 (Commissioner's DES Decision); 49 FR 34965, September 4, 1984 (Notice of Hearing for Nitrofurazone); and, 56 FR 41902, August 23, 1991 (Commissioner's Nitrofurans Decision).

III. Summary of the Evidence

In accordance with FDA's procedural regulations (§ 12.85) CVM has placed on file with the Dockets Management Branch (address above) copies of all documents in the CVM Director's files containing factual information relating to the issues involved in the hearing, and a narrative statement summarizing the evidence CVM plans to introduce at the hearing. For the benefit of those who are unable to inspect those documents, the information placed on file by CVM is summarized below.

The primary factual issues at the hearing will be whether there is a reasonable basis from which serious questions about the safety of enrofloxacin use in poultry may be inferred, and, if so, whether the use of enrofloxacin under the approved conditions of use in poultry has been shown to be safe. This action is based on CVM's determination that the use of fluoroquinolones in poultry causes the development of fluoroquinolone-resistant *Campylobacter* spp., a human pathogen, in poultry; that this fluoroquinolone-resistant *Campylobacter* spp. is transferred to humans and is a significant cause of the development of fluoroquinolone-resistant *Campylobacter* infections in humans; and thatfluoroquinolone-resistant *Campylobacter* infections in humans are a human health hazard. (See 65 FR 64954.)

CVM has concluded, based on data from surveillance programs, published literature, and other sources, that the use of fluoroquinolones in poultry is a significant cause of fluoroquinolone-resistant *Campylobacter* on poultry carcasses and therefore a significant cause of fluoroquinolone-resistant *Campylobacter* infections in humans. This conclusion is supported by data establishing a temporal association between approval of fluoroquinolones for use in poultry and an increase influoroquinolone-resistant *Campylobacter* infections in humans; by a comparison of fluoroquinolone use in poultry with other possible cause of fluoroquinolone-resistant human infections; and a risk assessment that determined that in 1999, a mean estimate of 9,261 persons infected with campylobacteriosis and prescribed a

fluoroquinolone in the United States would have had a fluoroquinolone-resistant illness due to the use of fluoroquinolones in chickens.

CVM believes that such people are likely to have had prolonged illnesses or complications. CVM concluded that development of resistance to fluorquinolones among *Campylobacter* has important consequences for human health since patients with severe enteric disease such as campylobacteriosis are usually treated empirically. CVM believes that *Campylobacter* resistance presents a dilemma for the physician. If fluoroquinolone treatment is given based on symptoms, and the patient is infected with fluoroquinolone-resistant *Campylobacter* spp., there is a risk that the treatment will not be effective, or will be less effective, and valuable time will be lost. If treatment is delayed until the causative organism and susceptibility are confirmed by a medical laboratory, again valuable time will be lost. In these situations, the disease may be prolonged or result in complications, especially in vulnerable patients with underlying health problems.

IV. Conclusion

Upon review of Bayer Corp.'s response to the NOOH, the Acting Principal Deputy Commissioner concludes that a hearing is appropriate with respect to CVM's proposal to withdraw approval of the NADA for enrofloxacin. The issue at the hearing will be as follows:

Whether new evidence shows that enrofloxacin is not now shown to be safe for use under the conditions of use upon the basis of which the application was approved. This issue includes:

A. Whether there is a reasonable basis from which serious questions about the safety of enrofloxacin use in poultry may be inferred, such as:

1. Whether enrofloxacin use in poultry acts as a selection pressure, resulting in the emergence and dissemination of fluoroquinolone-resistant *Campylobacter* spp. In poultry?

2. Whether fluoroquinolone-resistant *Campylobacter* spp. in poultry are transferred to humans and whether they contribute to fluoroquinolone-resistant *Campylobacter* infections in humans?

3. Whether fluoroquinolone-resistant *Campylobacter* infections in humans have the potential to adversely affect human health?

B. Whether the use of enrofloxacin under the approved conditions of use in poultry has been shown to be safe?

The hearing on these issues will take place in FDA conference room F. Administrative Law Judge Daniel J. Davidson will preside. Parties to the hearing will be CVM and Bayer Corp., the sponsor of the NADA for enrofloxacin. Any other interested person may participate in the hearing and be accorded the rights granted to participants by FDA regulations. Participants are required to assume the obligations of participation as set forth in FDA regulations (see part 12). Written notices of participation shall be filed with the Dockets Management Branch no later than March 22, 2002 (see § 12.45). A notice of participation shall be identified with the docket number found in brackets in the heading of this document and clearly labeled ''Enrofloxacin Hearing.''

A prehearing conference will be held on April 8, 2002. All participants are required both to attend the prehearing conference and to be prepared to comply with § 12.92, which sets forth the procedure and matters to be considered at such conference.

As discussed above, CVM has filed with the Dockets Management Branch a narrative statement setting forth its position on the hearing issues and a detailed factual description of the evidentiary background upon which it intends to rely at the hearing. CVM has also filed with the Dockets Management Branch the other documents required by § 12.85, including copies of the relevant portions of NADA, published studies, and other data, bearing on the question of whether enrofloxacin has been shown to be safe for use under the conditions of use upon the basis of which the application was approved. Interested persons may obtain a copy of the narrative statement from the Dockets Management Branch. With the exception of any data withheld from public disclosure under the provisions of 21 CFR 10.20(j), 21 U.S.C. 331(j), or 18 U.S.C. 1905, the data described above may also be examined at the Dockets Management Branch between 9 a.m. to 4 p.m., Monday through Friday. Bayer Corp. shall submit all the written data and information requiredby § 12.85 by April 22, 2002. All other participants shall submit all written data and information required by§ 12.85 by April 22, 2002. Any request to extend the period for submission of the required materials or for a postponement of the scheduled prehearing conference shall be addressed to the Administrative Law Judge.

The prehearing conference and the hearing will be open to the public. Any participants may appear in person, or by or with counsel, or with other qualified representatives, and may be heard on relevant matters.

Because this is a public hearing, it is subject to our guideline concerning the policy and procedures for electronic media coverage of public agency administrative proceedings. This guideline was published in the **Federal Register** on April 13, 1984 (49 FR 14723). These procedures are primarily intended to expedite media access to our public proceedings, including formal evidentiary hearings conducted under part 12 of the agency's regulations. Under this guideline, representatives of the electronic media may be permitted, subject to certain limitations, to videotape, film, or otherwise record our public administrative proceedings, including the testimony of witnesses in the proceedings. Accordingly, the parties and nonparty participants to this hearing, and all other interested persons, are directed to the guideline, for a more complete explanation of the guideline's effect on this hearing.

This notice is issued under section 512 of the Federal Food, Drug, and Cosmetic Act (21 U.S.C. 360b), and under authority delegated to the Commissioner of Food and Drugs (21 CFR 5.10).

Dated: February 13, 2002.

Bernard A. Schwetz,

Acting Principal Deputy Commissioner.

[FR Doc. 02–4082 Filed 2–15–02; 8:45 am]

BILLING CODE 4160–01–S

DEPARTMENT OF HEALTH AND HUMAN SERVICES

Food and Drug Administration

[Docket No. 01P–0383]

Determination That Azathioprine 25-Milligram Tablet Was Not Withdrawn From Sale for Reasons of Safety or Effectiveness

AGENCY: Food and Drug Administration, HHS.

ACTION: Notice.

SUMMARY: The Food and Drug Administration (FDA) is announcing its determination that azathioprine 25-milligram (mg) tablet (Imuran) was not withdrawn from sale for reasons of safety or effectiveness. This determination will allow FDA to approve abbreviated new drug applications (ANDAs) for azathioprine 25-mg tablets.

FOR FURTHER INFORMATION CONTACT: Carol E. Drew, Center for Drug Evaluation and Research (HFD–7), Food and Drug Administration, 5600 Fishers

Lane, Rockville, MD 20857, 301–594–2041.

SUPPLEMENTARY INFORMATION: In 1984, Congress enacted the Drug Price Competition and Patent Term Restoration Act of 1984 (Public Law 98–417) (the 1984 amendments), which authorized the approval of duplicate versions of drug products approved under an ANDA procedure. ANDA sponsors must, with certain exceptions, show that the drug for which they are seeking approval contains the same active ingredient in the same strength and dosage form as the ''listed drug,'' which is a version of the drug that was previously approved under a new drug application (NDA). Sponsors of ANDAs do not have to repeat the extensive clinical testing otherwise necessary to gain approval of an NDA. The only clinical data required in an ANDA are data to show that the drug that is the subject of the ANDA is bioequivalent to the listed drug.

The 1984 amendments include what is now section 505(j)(7) of the Federal Food, Drug, and Cosmetic Act (21 U.S.C. 355(j)(7)), which requires FDA to publish a list of all approved drugs. FDA publishes this list as part of the ''Approved Drug Products With Therapeutic Equivalence Evaluations,'' which is generally known as the ''Orange Book.'' Under FDA regulations, drugs are withdrawn from the list if the agency withdraws or suspends approval of the drug's NDA or ANDA for reasons of safety or effectiveness, or if FDA determines that the listed drug was withdrawn from sale for reasons of safety or effectiveness (21 CFR 314.162). Regulations also provide that the agency must make a determination as to whether a listed drug was withdrawn from sale for reasons of safety or effectiveness before an ANDA that refers to that listed drug may be approved (§ 314.161(a)(1) (21 CFR 314.161(a)(1))). FDA may not approve an ANDA that does not refer to a listed drug.

On August 31, 2001, AAI International submitted a citizen petition (Docket No. 01P–0383/CP1) under 21 CFR 10.30 to FDA requesting that the agency determine whether azathioprine 25-mg tablet was withdrawn from sale for reasons of safety or effectiveness. Azathioprine 25-mg tablet is the subject of NDA 016–324. FDA approved NDA 016–324, currently held by Prometheus Laboratories, Inc. (Prometheus), on March 21, 1980. FDA has determined that azathioprine 25-mg tablet was withdrawn from sale.

FDA has reviewed its records and, under § 314.161, has determined that azathioprine 25-mg tablet was not withdrawn from sale for reasons of safety or effectiveness. Accordingly, the agency will continue to list azathioprine 25-mg tablet in the ''Discontinued Drug Product List'' section of the Orange Book. The ''Discontinued Drug Product List'' delineates, among other items, drug products that have been discontinued from marketing for reasons other than safety or effectiveness. ANDAs that refer to azathioprine 25-mg tablet may be approved by the agency.

Dated: February 11, 2002.

Margaret M. Dotzel,

Associate Commissioner for Policy.

[FR Doc. 02–4030 Filed 2–19–02; 8:45 am]

BILLING CODE 4160–01–S

DEPARTMENT OF HEALTH AND HUMAN SERVICES

Food and Drug Administration

[Docket No. 02N–0035]

Mylan Pharmaceuticals et al.; Withdrawal of Approval of 34 Abbreviated New Drug Applications

AGENCY: Food and Drug Administration, HHS.

ACTION: Notice.

SUMMARY: The Food and Drug Administration (FDA) is withdrawing approval of 34 abbreviated new drug applications (ANDAs). The holders of the applications notified the agency in writing that the drug products were no longer marketed and requested that the approval of the applications be withdrawn.

DATES: Effective March 22, 2002.

FOR FURTHER INFORMATION CONTACT: Florine P. Purdie, Center for Drug Evaluation and Research (HFD–7), Food and Drug Administration, 5600 Fishers Lane, Rockville, MD 20857, 301–594–2041.

SUPPLEMENTARY INFORMATION: The holders of the applications listed in the table in this document have informed FDA that these drug products are no longer marketed and have requested that FDA withdraw approval of the applications. The applicants have also, by their request, waived their opportunity for a hearing.

ANDA No.	Drug	Applicant
61–530	Penicillin V Potassium Tablets USP, 250 milligrams (mg) and 500 mg.	Mylan Pharmaceuticals, Inc., 781 Chestnut Ridge Rd., P.O. Box 4310 Morgantown, WV 26504–4310.
61–829	Ampicillin for Oral Suspension USP, 125 mg/5 milliliters (mL) and 250mg/5 mL.	Do.
62–067	Amoxicillin Capsules USP, 250 mg and 500 mg	Do.
62–104	Neomycyin Sulfate with Hydrocortisone Ointment USP, 0.35% and 1%.	Clay-Park Laboratories, Inc., 1700 Bathgate Ave., Bronx, NY 10457.
62–280	Nystatin and Triamcinolone Acetonide Ointment USP	Do.
62–372	Mezlin (sterile mezlocillin sodium)	Bayer Corp. Pharmaceutical Division, 400 Morgan Lane, West Haven, CT 06516.
62–697	Mezlin (sterile mezlocillin sodium)	Do.
71–099	Bromatapp ER (brompheniramine maleate/phenylpropanolamine hydrochloride (HCl)) Extended-Release Tablets, 12 mg/75 mg.	Copley Pharmaceuticals, Inc., 25 John Rd. Canton, MA 02021.
71–551	Flurazepam HCl Capsules USP, 30 mg	Purepac Pharmaceutical Co., 200 Elmora Ave., Elizabeth, NJ 07207.
71–927	Flurazepam HCl Capsules USP, 15 mg	Do.
72–027	Fentanyl Citrate and Droperidol Injection	AstraZeneca LP, 1800 Concord Pike, P.O. Box 8355, Wilmington, DE 19803–8355.
72–070	Nalbuphine HCl Injection USP, 10 mg/mL	Do.
72–073	Nalbuphine HCl Injection USP, 20 mg/mL	Do.
72–921	Prazosin HCl Capsules USP, 2 mg	Purepac Pharmaceutical Co.
72–991	Prazosin HCl Capsules USP, 1 mg	Do.
72–992	Prazosin HCl Capsules USP, 5 mg	Do.
73–690	Calcitonin-Salmon Injection, 200 international units/mL	AstraZeneca LP.

ANDA No.	Drug	Applicant
74–579	Betamethasone Dipropionate Cream USP, 0.05% (base)	Clay-Park Laboratories, Inc.
75–263	Midazolam HCl Injection, 5 mg (base)/mL	AstraZeneca LP.
75–348	Ketorolac Tromethamine Injection USP, 15 mg/mL and 30 mg/mL.	Apothecon, Inc., P.O. Box 4500, Princeton, NJ 08543–4500.
75–355	Labetalol HCl Injection USP, 5 mg/mL	Do.
75–620	Midazolam HCl Injection, 1 mg (base)/mL and 5 mg (base)/mL.	Do.
75–641	Midazolam HCl Injection, 5 mg (base)/mL	Do.
75–642	Bisoprolol Fumarate and Hydrochlorothiazide Tablets	Do.
75–707	Famotidine Injection, 10 mg/mL	Do.
75–708	Famotidine Injection, 10 mg/mL (preservative free)	Do.
83–115	Niacin Tablets USP, 500 mg	Impax Laboratories, Inc., 30831 Huntwood Ave., Hayward, CA 94544.
84–968	Nitrofurazone Ointment USP, 0.2%	Clay-Park Laboratories, Inc.
85–130	Nitrofurazone Topical Solution USP, 0.2%	Do.
86–424	Triple Sulfa Vaginal Cream	Altana Inc., 60 Baylis Rd., Melville, NY 11747.
86–810	Fluocinolone Acetonide Cream USP, 0.01%	Clay-Park Laboratories, Inc.
86–811	Fluocinolone Acetonide Cream USP, 0.025%	Do.
89–784	Meperidine HCl Injection USP, 50 mg/mL	AstraZeneca LP.
89–788	Meperidine HCl Injection USP, 1,000 mg/mL	Do.

Therefore, under section 505(e) of the Federal Food, Drug, and Cosmetic Act (21 U.S.C. 355(e)) and under authority delegated to the Director, Center for Drug Evaluation and Research (21 CFR 5.82), approval of the applications listed in the table in this document, and all amendments and supplements thereto, is hereby withdrawn, effective March 22, 2002.

Dated: February 12, 2002.

Steven K. Galson,

Deputy Director, Center for Drug Evaluation and Research.

[FR Doc. 02–4091 Filed 2–19–02; 8:45 am]

BILLING CODE 4160–01–S

DEPARTMENT OF HEALTH AND HUMAN SERVICES

Food and Drug Administration

[Docket No. 01D–0064]

Draft Special Control Guidance Document on Encapsulated Amalgam, Amalgam Alloy, and Dental Mercury Labeling; Availability

AGENCY: Food and Drug Administration, HHS.

ACTION: Notice.

SUMMARY: The Food and Drug Administration (FDA) is announcing the availability of the draft guidance entitled ''Special Control Guidance Document on Encapsulated Amalgam, Amalgam Alloy, and Dental Mercury Labeling.'' This draft guidance is neither final nor is it in effect at this time. Elsewhere in this issue of the **Federal Register**, the agency is proposing to classify encapsulated amalgam into class II, to amend the classification regulation for amalgam alloy to provide for special controls, and to reclassify dental mercury into class II. The draft guidance document is intended to serve as a special control for these devices.

DATES: Submit written or electronic comments on the draft guidance by May 21, 2002. General comments on agency guidance documents are welcome at any time.

ADDRESSES: Submit written requests for single copies on a 3.5″ diskette of the draft guidance entitled ''Special Control Guidance Document on Encapsulated Amalgam, Amalgam Alloy, and Dental Mercury Labeling'' to the Division of Small Manufacturers Assistance (HFZ–220), Center for Devices and Radiological Health (CDRH), Food and Drug Administration, 1350 Piccard Dr., Rockville, MD 20850. Send two self-addressed adhesive labels to assist that office in processing your request, or fax your request to 301–443–8818. Submit written comments on the draft guidance to the Dockets Management Branch (HFA–305), Food and Drug Administration, 5630 Fishers Lane, rm. 1061, Rockville, MD 20852. Submit electronic comments to http://www.fda.gov/dockets/ecomments. Comments should be identified with the docket number found in brackets in the heading of this document. See the **SUPPLEMENTARY INFORMATION** section for information on electronic access to the draft guidance.

FOR FURTHER INFORMATION CONTACT: Susan Runner, Center for Devices and Radiological Health (HFZ–410), Food and Drug Administration, 9200 Corporate Blvd., Rockville, MD 20850, 301–827–5283.

SUPPLEMENTARY INFORMATION:

I. Background

Elsewhere in this issue of the **Federal Register**, the agency is proposing to classify encapsulated amalgam into class II, to amend the classification regulation for amalgam alloy to provide for special controls, and to reclassify dental mercury into class II. The draft guidance document is intended to serve as a special control for these devices. The guidance document contains recommendations concerning the content and format of labeling for these devices.

II. Significance of Guidance

This draft guidance is being issued consistent with FDA's good guidance practices regulation (21 CFR 10.115). This draft guidance document represents the agency's current thinking on encapsulated amalgam, amalgam alloy, and dental mercury labeling. It does not create or confer any rights for or on any person and does not operate to bind FDA or the public. An alternative approach may be used if such approach satisfies the applicable statutes and regulations. This draft guidance document is issued as a level 1 guidance consistent with the GGP regulations.

III. Electronic Access

In order to receive the draft guidance entitled ''Special Control Guidance Document on Encapsulated Amalgam, Amalgam Alloy, and Dental Mercury Labeling '' via your fax machine, call the CDRH Facts-On-Demand system at 800–899–0381 or 301–827–0111 from a touch-tone telephone. At the first voice prompt press 1 to enter the system. At the second voice prompt press 1 to order a document. Enter the document

number (1192) followed by the pound sign (#). Follow the remaining voice prompts to complete your request.

Persons interested in obtaining a copy of the draft guidance may also do so using the Internet. CDRH maintains an entry on the Internet for easy access to information including text, graphics, and files that may be downloaded to a personal computer with Internet access. Updated on a regular basis, the CDRH home page includes ''Special Control Guidance Document on Encapsulated Amalgam, Amalgam Alloy, and Dental Mercury Labeling,'' device safety alerts, **Federal Register** reprints, information on premarket submissions (including lists of approved applications and manufacturers' addresses), small manufacturers' assistance, information on video conferencing and electronic submissions, Mammography Matters, and other device-oriented information. The CDRH home page may be accessed at http://www.fda.gov/cdrh.

IV. Comments

Interested persons may submit to the Dockets Management Branch (address above) written or electronic comments regarding this draft guidance by May 21, 2002. Two copies of any comments are to be submitted, except that individuals may submit one copy. Comments are to be identified with the docket number found in brackets in the heading of this document. The draft guidance and received comments are available for public examination in the Dockets Management Branch between 9 a.m. and 4 p.m., Monday through Friday.

Dated: February 7, 2002.

Margaret M. Dotzel,

Associate Commissioner for Policy.

[FR Doc. 02–4029 Filed 2–19–02; 8:45 am]

BILLING CODE 4160–01–S

DEPARTMENT OF HEALTH AND HUMAN SERVICES

Food and Drug Administration

[Docket No. 02D–0003]

Draft Guidance for Industry on Exercise-Induced Bronchospasm (EIB)—Development of Drugs to Prevent EIB; Availability

AGENCY: Food and Drug Administration, HHS.

ACTION: Notice.

SUMMARY: The Food and Drug Administration (FDA) is announcing the availability of a draft guidance for industry entitled ''Exercise-Induced Bronchospasm (EIB)—Development of Drugs to Prevent EIB.'' The draft guidance is intended to assist sponsors in developing clinical trials for drugs that prevent EIB. The draft guidance addresses the types of trials that should be performed. It also discusses such issues as exercise testing, efficacy end points, and statistical analyses.

DATES: Submit written or electronic comments on the draft guidance by April 22, 2002. General comments on agency guidance documents are welcome at any time.

ADDRESSES: Submit written requests for single copies of the guidance to the Division of Drug Information (HFD–240), Center for Drug Evaluation and Research, Food and Drug Administration, 5600 Fishers Lane, Rockville, MD 20857. Send one self-addressed adhesive label to assist that office in processing your requests. Submit written comments on the draft guidance to the Dockets Management Branch (HFA–305), Food and Drug Administration, 5630 Fishers Lane, rm. 1061, Rockville, MD 20852. Submit electronic comments to *http://www.fda.gov/dockets/ecomments*. See the **SUPPLEMENTARY INFORMATION** section for electronic access to the draft guidance document.

FOR FURTHER INFORMATION CONTACT: Sandra L. Barnes, Center for Drug Evaluation and Research (HFD–570), Food and Drug Administration, 5600 Fishers Lane, Rockville, MD 20857, 301–827–1050.

SUPPLEMENTARY INFORMATION:

I. Background

FDA is announcing the availability of a draft guidance for industry entitled ''Exercise-Induced Bronchospasm (EIB)—Development of Drugs to Prevent EIB.'' This draft guidance is intended to assist sponsors in designing clinical development programs to achieve an indication for the ''prevention'' of EIB. Drugs that are given chronically to control asthma may also lessen the propensity to develop EIB, as a general consequence of decreasing bronchial hyperreactivity. An important distinction is made, however, between such chronically administered drugs and shorter acting drugs that are given acutely to prevent or treat EIB. This guidance document is intended to provide trial design suggestions to help guide sponsors who are interested in developing drugs that are given acutely to prevent EIB.

This draft guidance is being issued consistent with FDA's good guidance practices regulation (21 CFR 10.115). The draft guidance, when finalized, will represent the agency's current thinking on EIB and the development of drugs to prevent EIB. It does not create or confer any rights for or on any person and does not operate to bind FDA or the public. An alternative approach may be used if such approach satisfies the requirements of the applicable statutes and regulations.

II. Comments

Interested persons may submit to the Dockets Management Branch (address above) written or electronic comments on the draft guidance. Two copies of any comments are to be submitted, except that individuals may submit one copy. Comments are to be identified with the docket number found in brackets in the heading of this document. The draft guidance and received comments are available for public examination in the Dockets Management Branch between 9 a.m. and 4 p.m., Monday through Friday.

III. Electronic Access

Persons with access to the Internet may obtain the document at either *http://www.fda.gov/cder/guidance/index.htm* or *http://www.fda.gov/ohrms/dockets/default.htm*.

Dated: January 30, 2002.

Margaret M. Dotzel,

Associate Commissioner for Policy.

[FR Doc. 02–4090 Filed 2–19–02; 8:45 am]

BILLING CODE 4160–01–S

DEPARTMENT OF HEALTH AND HUMAN SERVICES

Substance Abuse and Mental Health Services Administration

Fiscal Year (FY) 2002 Funding Opportunities

AGENCY: Substance Abuse and Mental Health Services Administration, HHS.

ACTION: Notice of Funding Availability.

SUMMARY: The Substance Abuse and Mental Health Services Administration (SAMHSA) Center for Mental Health Services (CMHS) announces the availability of FY 2002 funds for grants for the following activity. This notice is not a complete description of the activity; potential applicants must obtain a copy of the Guidance for Applicants (GFA), including Part I, Partnerships for Youth Transition, and Part II, General Policies and Procedures Applicable to all SAMHSA Applications for Discretionary Grants and Cooperative Agreements, before preparing and submitting an application.

Activity	Partnerships for Youth Transition

Application Deadline	April 11, 2002
Est. Funds FY 2001	$2 million
Est. No. of Awards	4–5
Project Period	4 years

The actual amount available for the award may vary, depending on unanticipated program requirements and the number and quality of applications received. FY 2002 funds for the activity discussed in this announcement were appropriated by Congress under Public Law No. 106–310. SAMHSA's policies and procedures for peer review and Advisory Council review of grant and cooperative agreement application were published in the **Federal Register** (Vol. 58, No. 126) on July 2, 1993.

General Instructions: Applicants must use application form PHS 5161–1 (Rev. 7/00). The application kit contains the two-part application materials (complete programmatic guidance and instructions for preparing and submitting applications), the PHS 5161–1 which includes Standard Form 424 (Face Page), and other documentation and forms. Application kits may be obtained from: National Mental Health Services Knowledge Exchange Network (KEN), PO Box 42490, Washington, DC 20015, Telephone: 1–800–789–2647.

The PHS 5161–1 application form and the full text of the activity are also available electronically via SAMHSA's World Wide Web Home Page: *http://www.samhsa.gov*

When requesting an application kit, the applicant must specify the particular activity for which detailed information is desired. All information necessary to apply, including where to submit applications and application deadline instructions, are included in the application kit.

Purpose: Substance Abuse and Mental Health Services Administration (SAMHSA) Center for Mental Health Services (CMHS) announces the availability of FY 2002 funds for cooperative agreements to develop, implement, stabilize, and document models of comprehensive programs to help support youth with serious emotional disturbances or serious mental illnesses as they enter the period of emerging adulthood. By the end of the award period, these models should be well-positioned to be rigorously evaluated regarding their effectiveness.

Eligibility: States and political sub-divisions of States (e.g., State agencies or departments; County, City, or State regional agencies; Indian tribes or tribal organizations as defined in section 4(b) and section 4(c) of the Indian Self-determination and Education Assistance Act) can apply. States are defined in section 2 of the PHS Act as including, in addition to the several States, only the District of Columbia, Guam, Commonwealth of Puerto Rico, Northern Mariana Islands, Virgin Islands, American Samoa, and Trust Territory of the Pacific Islands (now Palau, Micronesia, and the Marshall Islands). Interested parties who do not meet these criteria, including faith-based organizations, are encouraged to partner with an agency or organization that is eligible to apply as the lead agency.

Availability of Funds: Approximately $2 million will be available for 4–5 awards. No more than $500,000 in total costs (direct and indirect) will be awarded per cooperative agreement per year. Actual funding levels will depend on the availability of funds. SAMHSA intends to partner with other federal agencies and private foundations in the administration and funding of this program. The possibility exists, therefore, that money may become available to fund more sites than are specified here.

Period of Support: Support should be requested for 4 years. Annual continuation awards will depend on the availability of funds and progress achieved. Only those programs that have completed all required products to the satisfaction of CMHS program staff at the end of year 2 will be renewed for years 3 and 4.

Criteria for Review and Funding

General Review Criteria: Competing applications requesting funding under this activity will be reviewed for technical merit in accordance with established PHS/SAMHSA peer review procedures. Review criteria that will be used by the peer review groups are specified in the application guidance material.

Award Criteria for Scored Applications: Applications will be considered for funding on the basis of their overall technical merit as determined through the peer review group and the appropriate National Advisory Council review process. Availability of funds and geographical distribution of sites will also be award criteria. No more than one cooperative agreement will be awarded per State.

Catalog of Federal Domestic Assistance Number: 93.230.

Program Contact: For questions concerning program issues contact: Diane L. Sondheimer, Center for Mental Health Services, Substance Abuse and Mental Health Services Administration, 5600 Fishers Lane, Room 11C–16, Rockville, MD 20857, Telephone: 301–443–1333, Email: dsondhei@*samhsa.gov*.

For questions regarding grants management issues, contact: Stephen Hudak, Division of Grants Management, Substance Abuse and Mental Health Services Administration, 5515 Security Lane, Rm 630, Rockville, MD 20852, (301) 443–9666, E-mail: *shudak@samhsa.gov*.

Public Health System Reporting Requirements: The Public Health System Impact Statement (PHSIS) is intended to keep State and local health officials apprised of proposed health services grant and cooperative agreement applications submitted by community-based nongovernmental organizations within their jurisdictions.

Community-based nongovernmental service providers who are not transmitting their applications through the State must submit a PHSIS to the head(s) of the appropriate State and local health agencies in the area(s) to be affected not later than the pertinent receipt date for applications. This PHSIS consists of the following information:

a. A copy of the face page of the application (Standard form 424).

b. A summary of the project (PHSIS), not to exceed one page, which provides:

(1) A description of the population to be served.

(2) A summary of the services to be provided.

(3) A description of the coordination planned with the appropriate State or local health agencies.

State and local governments and Indian Tribal Authority applicants are not subject to the Public Health System Reporting Requirements. Application guidance materials will specify if a particular FY 2002 activity is subject to the Public Health System Reporting Requirements.

PHS Non-use of Tobacco Policy Statement: The PHS strongly encourages all grant and contract recipients to provide a smoke-free workplace and promote the non-use of all tobacco products. In addition, Public Law 103–227, the Pro-Children Act of 1994, prohibits smoking in certain facilities (or in some cases, any portion of a facility) in which regular or routine education, library, day care, health care, or early childhood development services are provided to children. This is consistent with the PHS mission to protect and advance the physical and mental health of the American people.

Executive Order 12372: Applications submitted in response to the FY 2002 activity listed above are subject to the intergovernmental review requirements of Executive Order 12372, as implemented through DHHS regulations at 45 CFR part 100. E.O. 12372 sets up

a system for State and local government review of applications for Federal financial assistance. Applicants (other than Federally recognized Indian tribal governments) should contact the State's Single Point of Contact (SPOC) as early as possible to alert them to the prospective application(s) and to receive any necessary instructions on the State's review process. For proposed projects serving more than one State, the applicant is advised to contact the SPOC of each affected State. A current listing of SPOCs is included in the application guidance materials. The SPOC should send any State review process recommendations directly to: Division of Extramural Activities, Policy, and Review, Substance Abuse and Mental Health Services Administration, Parklawn Building, Room 17–89, 5600 Fishers Lane, Rockville, Maryland 20857.

The due date for State review process recommendations is no later than 60 days after the specified deadline date for the receipt of applications. SAMHSA does not guarantee to accommodate or explain SPOC comments that are received after the 60-day cut-off.

Dated: February 13, 2002.

Richard Kopanda,

Executive Officer, Substance Abuse and Mental Health, Services Administration.

[FR Doc. 02–4031 Filed 2–19–02; 8:45 am]

BILLING CODE 4162–20–P

DEPARTMENT OF HOUSING AND URBAN DEVELOPMENT

[Docket No. FR–4739–N–03]

Notice of Proposed Information Collection: Comment Request

Loan Servicing of all Three Coinsurance Programs; Section 223(f), Section 221(d), and Section 232

AGENCY: Office of the Assistant Secretary for Housing-Federal Housing Commissioner, HUD.

ACTION: Notice.

SUMMARY: The proposed information collection requirement described below will be submitted to the Office of Management and Budget (OMB) for review, as required by the Paperwork Reduction Act. The Department is soliciting public comments on the subject proposal.

DATES: Comments Due Date: April 22, 2001.

ADDRESSES: Interested persons are invited to submit comments regarding this proposal. Comments should refer to the proposal by name and/or OMB Control Number and should be sent to: Wayne Eddins, Reports Management Officer, Department of Housing and Urban Development, 451 7th Street, SW., L'Enfant Plaza Building, Room 8001, Washington, DC 20410.

FOR FURTHER INFORMATION CONTACT: Kimberly R. Sanford, Policy and Participation Standards Division, Department of Housing and Urban Development, 451 7th Street SW., Washington, DC 20410, telephone (202) 708–3730 (this is not a toll free number) for copies of the proposed forms and other available information.

SUPPLEMENTARY INFORMATION: The Department is submitting the proposed information collection to OMB for review, as required by the Paperwork Reduction Act of 1995 (44 U.S.C. Chapter 35, as amended).

This Notice is soliciting comments from members of the public and affected agencies concerning the proposed collection of information to: (1) Evaluate whether the proposed collection is necessary for the proper performance of the functions of the agency, including whether the information will have practical utility; (2) Evaluate the accuracy of the agency's estimate of the burden of the proposed collection of information; (3) Enhance the quality, utility, and clarity of the information to be collected; and (4) Minimize the burden of the collection of information on those who are to respond; including the use of appropriate automated collection techniques or other forms of information technology, e.g., permitting electronic submission of responses.

This Notice also lists the following information:

Title of Proposal: Loan Servicing of all Three Coinsurance Programs; section 223(f), section 221(d), and section 232.

OMB Control Number, if applicable: 2402–0314.

Description of the need for the information and proposed use: Information is needed to review and evaluate the financial, physical, and managerial adequacy of multifamily housing, retirement service centers, and nursing homes with multi-million dollar coinsured loans to minimize risks and to protect these assets and the Government's interest.

Agency form numbers, if applicable: None.

Estimation of the total numbers of hours needed to prepare the information collection including number of respondents, frequency of response, and hours of response: The estimated number of respondents is 16, the frequency of response is annually, estimated time to complete response is 67.5 hours, and the total annual burden requested is 1,080 hours.

Status of the proposed information collection: Reinstatement, with change, of a previously approved collection for which approval has expired.

Authority: The Paperwork Reduction Act of 1995, 44 U.S.C. Chapter 35, as amended.

Dated: February 9, 2002.

John C. Weicher,

Assistant Secretary for Housing–, Federal Housing Commissioner.

[FR Doc. 02–4016 Filed 2–19–02; 8:45 am]

BILLING CODE 4210–27–M

DEPARTMENT OF THE INTERIOR

Fish and Wildlife Service

Notice of Meeting of the Klamath Fisheries Management Council

AGENCY: Fish and Wildlife Service, Interior.

ACTION: Notice of meeting.

SUMMARY: Pursuant to section 10(a)(2) of the Federal Advisory Committee Act (5 U.S.C. App. I), this notice announces a meeting of the Klamath Fishery Management Council, established under the authority of the Klamath River Basin Fishery Resources Restoration Act (16 U.S.C. 460ss *et seq.*). The Klamath Fishery Management Council makes recommendations to agencies that regulate harvest of anadromous fish in the Klamath River Basin. The objectives of this meeting are to hear technical reports, to discuss and develop Klamath fall chinook salmon harvest management options for the 2002 season, and to make recommendations to the Pacific Fishery Management Council and other agencies. The meeting is open to the public.

DATES: The Klamath Fishery Management Council will meet from 3:00 p.m. to 5:00 p.m. on Sunday, March 10, 2002.

PLACE: The meeting will be held at the Red Lion Hotel, 1401 Arden Way, Sacramento, California.

FOR FURTHER INFORMATION CONTACT: Phil Detrich, Project Leader, 1829 South Oregon Street, Yreka, California 96097, telephone (530) 842–5763.

SUPPLEMENTARY INFORMATION: At the March 10, 2002 meeting, the Klamath Fishery Management Council may schedule short follow-up meetings to be held between March,11, 2002, and March 15, 2002, at the Red Lion Hotel, 1401 Arden Way, Sacramento, California, where the Pacific Fishery Management Council will be meeting.

For background information on the Klamath Council, please refer to the notice of their initial meeting that appeared in the **Federal Register** on July 8, 1987 (52 FR 25639).

Dated: February 12, 2002.

John Engbring,

Acting Manager, California/Nevada Operations Office, Sacramento, California.

[FR Doc. 02–4007 Filed 2–19–02; 8:45 am]

BILLING CODE 4310–55–P

DEPARTMENT OF THE INTERIOR

Bureau of Land Management

[NV–030–00–1020–24]

Mojave Southern Great Basin Resource Advisory Council; Notice of Meeting Location and Time

AGENCY: Bureau of Land Management, Interior.

ACTION: Notice of meeting location and time for the Mojave Southern Great Basin Resource Advisory Council (Nevada).

SUMMARY: In accordance with the Federal Land Policy and Management Act and the Federal Advisory Committee Act of 1972 (FACA), the U.S. Department of the Interior, Bureau of Land Management (BLM) Mojave Southern Great Basin Resource Advisory Council (RAC), Nevada, will be held as indicated below. Topics for discussion will include manager's reports of field office activities; an update on the Southern Nevada Public Land Management Act of 1998; and other topics the council may raise.

All meetings are open to the public. The public may present written and/or oral comments to the council at 2:30 p.m. on Thursday, March 7, 2002. Individuals who need special assistance such as sign language interpretation or other reasonable accommodations should contact Phillip Guerrero at (702) 498–6088 by March 1, 2002.

DATE AND TIME: The RAC will meet on Thursday, March 7 and Friday March 8, 2002 at the Bureau of Land Management, Las Vegas Field Office, 4701 North Torrey Pines Drive, Las Vegas NV 89130–2301 from 8:30 a.m. to 4 p.m. daily

FOR FURTHER INFORMATION CONTACT: Phillip L. Guerrero, Public Affairs Officer, BLM Las Vegas Field Office, 4701 North Torrey Pines Drive, Las Vegas NV 89130–2301, or by phone at (702) 498–6088.

Dated: January 21, 2002.

Phillip L. Guerrero,

Public Affairs Officer, Las Vegas Field Office.

[FR Doc. 02–4143 Filed 2–19–02; 8:45 am]

BILLING CODE 4310–HC–P

DEPARTMENT OF THE INTERIOR

Bureau of Land Management

(CO–600–00–1040–PG–241A)

Southwest Colorado and Northwest Colorado Resource Advisory Council Meetings

AGENCY: Bureau of Land Management, Interior.

ACTION: Notice of Meetings.

SUMMARY: Notice is hereby given that the next meeting of the Southwest Colorado Resource Advisory Council (RAC) will be held March 6, 2002 at the Ouray Community Center located at 320 6th Avenue in Ouray, Colorado. Notice is also given that the next meeting of the Northwest Colorado RAC will be held on March 14, 2002 at the Hotel Colorado, located at 516 Pine in Glenwood Springs, Colorado.

DATES: Southwest RAC meeting: March 6, 2002; Northwest RAC meeting: March 14, 2002.

FOR FURTHER INFORMATION CONTACT: Larry J. Porter, Bureau of Land Management, 2815 H Road, Grand Junction, Colorado 81506; Telephone (970) 244–3012.

SUPPLEMENTARY INFORMATION: The Southwest Colorado RAC will meet on Wednesday, March 6, 2002, in the Ouray Community Center located at 320 6th Avenue in Ouray, Colorado. The meeting will begin at 9:00 a.m., and will adjourn upon completion of the agenda, approximately 4:00 p.m. The purpose of the meeting is to elect new RAC officers and to consider several resource management topics including Gunnison Gorge National Conservation Area Resource Management Plan and Environmental Impact Statement update, weed management, wildlife conflicts, Uncompahgre Plateau Project update and BLM staff briefings.

The Northwest Colorado RAC will meet on Thursday, March 14, 2002, at the Hotel Colorado located at 516 Pine in Glenwood Springs, Colorardo. The meeting will begin at 9:00 a.m., and will adjourn upon completion of the agenda, approximately 4:00 p.m. The purpose of the meeting is to elect new RAC officers and to consider several resource management updates including RAC subcommittee reports, travel management, oil—gas—coal programs, cultural resources program, fire management, and BLM staff briefings.

These meetings are open to the public. Interested members of the public may present written or oral comments to either of the RACs at 9:20 a.m. or 3:40 p.m. on the respective meeting dates. Per-person time limits for oral statements may be set to allow all interested individuals an opportunity to speak. Subject to the time available, individuals may also be allowed to provide input to the councils during discussion of specific agenda topics.

Summary minutes of RAC meetings are maintained in the BLM Western Slope Center Office located at 2815 H Road, Grand Junction, CO 81506; Telephone (970) 244–3000. Minutes are available for public inspection and reproduction during regular business hours within thirty (30) days following the meeting.

Dated: January 24, 2002

Larry J. Porter

Resource Advisor, Western Slope Center.

[FR Doc. 02–4144 Filed 2–19–02; 8:45 am]

BILLING CODE 4310–JB–P

DEPARTMENT OF THE INTERIOR

Bureau of Reclamation

Pick-Sloan Missouri Basin Program (P–SMBP), Eastern and Western Division Project Use Power Rate Adjustment

AGENCY: Bureau of Reclamation, Interior.

ACTION: Approval of new rate for Pick-Sloan Missouri Basin Program (P–SMBP), Eastern and Western Division Project Use Power.

SUMMARY: The Bureau of Reclamation (Reclamation) determined, after public input, that the proposed P–SMBP project use power rate of 10.76 mils/kWh is approved and will become effective 30 days after this notice is published.

DATES: The P–SMBP project use power rate of 10.76 mils/kWh will become effective March 22, 2002.

ADDRESSES: All booklets, studies, comments/letters that were utilized to develop the rate for project use power are available for inspection and copying at the Great Plains Regional Office, located at 316 North 26th Street, Billings, Montana 59101.

FOR FURTHER INFORMATION CONTACT: Kent Heidt at (406) 247–7761.

SUPPLEMENTARY INFORMATION: Power rates for the P–SMBP are established pursuant to the Reclamation Act of 1902

(43 U.S.C. 371 *et seq.*), as amended and supplemented by subsequent enactments, particularly Section 9(c) of the Reclamation Project Act of 1939 (43 U.S.C. 485h(c)) and the Flood Control Act of 1944 (58 Stat. 887).

The project use power rate will be reviewed by Reclamation each time Western Area Power Administration (Western) adjusts the P–SMBP Firm power rate. Western will conduct the necessary studies and will use the same Reclamation-established methodology that was used to develop the 10.76 mils/kWh rate to calculate any new rate. The P–SMBP project use rate will be adjusted by Reclamation when Western adjusts the P–SMBP Firm power rate.

Explanation of Public Comment Format

Reclamation published a **Federal Register** notice on December 18, 2000 (65 FR 79122, Dec. 18, 2000) stating our intent to adjust the project use power rate with a 30-day written comment period ending on January 17, 2001. Reclamation published another **Federal Register** notice on January 16, 2001 (66 FR 3611, Jan. 16, 2001), that extended the comment period to February 26, 2001. A total of 18 letters with written comments were received during the comment period.

Project Use Power Rate Adjustment Comments

The following comments were received during the public comment period. Reclamation paraphrased and combined comments when it did not affect the meaning. Reclamation's response follows each comment.

Comment: Reclamation should grant a 60-day extension of time for comments on proposed P–SMBP project use power rate adjustment.

Response: The comment period was extended by **Federal Register** notice dated January 16, 2001 (66 FR 3611, Jan. 16, 2001), to February 26, 2001, a 41-day extension.

Comment: The rate adjustment is the first step in a base rate change for all projects utilizing P–SMBP project use power.

Response: The ''Flood Control Act of 1944'' (Act) provides for a 2.5 mils/kWh project use power rate which was considered at that time to cover the cost of generation, transmission, and distribution while at the same time be within the irrigators ability to pay. The Act does not preclude rate adjustments, within ability to pay. The rate for project use power will be adjusted to reflect actual operating, maintenance, and replacement (OM&R) costs, subject to ability to pay. In all cases the rate will not be less than 2.5 mils/kWh.

Comment: The rate adjustment has the potential to put irrigation units out of business.

Response: As it has been the case with project use power contracts initially executed by this Region, the pumping power contractors will pay according to ability-to-pay. Should a district's ability to pay not increase, irrigators will continue to pay 2.5 mils/kWh. The water contracts will contain a 5-year ability-to-pay review provision consistent with Reclamation-wide policy following the Office of Inspector General Audit ''Repayment of Irrigation Investments by Water Districts: 93–1468,'' issued February 8, 1993.

Comment: The rate adjustment is a major policy change in the manner in which wheeling costs and ability-to-pay are applied to the rate.

Response: The rate adjustment does not result from any change in policy concerning the inclusion of wheeling costs in the project use power rate or the application of ability to pay these costs. The Act contains the rationale and congressional intent for incorporating wheeling costs in the project use power rate as well as applying the ability-to-pay concept to irrigation pumping power costs.

Comment: Third party wheeling costs will be transferred from the irrigators to all preference power customers due to ability to pay. Third party wheeling costs are being reclassified as annual O&M expenses.

Response: The intent of P–SMBP was to provide power to the pump. The 2.5 mils/kWh project use power rate was established under the assumption that energy would be transmitted and distributed to the pump over federally owned lines. If Reclamation had built its own lines all the way to the pumps, OM&R would be included in the basic pumping power rate. Therefore, wheeling costs will be included similarly as if Reclamation had built the lines.

Comment: Including wheeling costs in the project use power rate opens the door wide for further cost reallocation on other irrigation costs.

Response: No. Reclamation law generally requires that districts pay all power and water OM&R costs. However, the Pick-Sloan program is unique due to SD 191's application of ability to pay to power, i.e., irrigation pumping power. Since the mid-1970's, the difference between the 2.5 mil irrigation pumping power rate set in 1944 and full OM&R costs has been incorporated into the preference power rate.

Comment: Reclamation should provide the legal basis for the charge and enunciate a clear policy for treatment of costs related to P–SMBP irrigation projects.

Response: General Reclamation law requires that districts pay all power and water OM&R costs. The P–SMBP has a unique legal provision, the application of ability-to-pay to project use power. A rate adjustment does not affect the treatment of cost related to P–SMBP irrigation projects.

Comment: Reclamation shall provide clear justification for the proposed cost transfer and explain how the original congressional intent with respect to cost/benefit evaluation can be justified as legal.

Response: On P–SMBP projects the Congress intended that there be a substantial subsidy for irrigation development and made special allowance for the payment of power costs to assure success on those projects that required pumping to provide 10 feet of head at the farm turnout. The October 31, 1947, memorandum from the Acting Assistant Commissioner states: ''In the event Reclamation elects to provide service by wheeling arrangements, Reclamation should properly make arrangements for wheeling service and absorb the cost thereof as an operation expense. Such is merely an expense in lieu of the costs of providing service over federally owned facilities.''

Comment: Reclamation's proposed methodology for determining the project use power rate does not properly reflect all costs and accounting for those costs. Spreading the irrigation third party wheeling costs across all P–SMBP Firm power sales artificially reduces the proposed project use power rate to 10.76 mils/kWh. If third party wheeling costs for P–SMBP irrigation projects were properly allocated only to P–SMBP irrigation projects, the project use power rate would be almost 18 mils/kWh. That methodology and resulting rate would establish an accurate project use power rate. Reclamation should adopt the methodology that properly classifies third party wheeling as a component of irrigation sales and not based on total P–SMBP sales.

Response: The proposed rate of 10.76 mils/kWh has all current OM&R costs, including wheeling, from the three Federal agencies spread over all the sales, not just irrigation sales. Third party wheeling cost for project use power, along with other Federal wheeling costs, is considered the same as any other OM&R expense in the P–SMBP power repayment study.

Comment: Using the methodology that spreads third party wheeling costs only over irrigation sales will ensure

proper accounting and not adversely affect the irrigators.

Response: Reclamation will spread the third party wheeling for project use power over the entire rate structure just as if the power were wheeled over Federal lines.

Comment: The methodology of the ability-to-pay studies seems seriously flawed as private irrigation districts in the same area of irrigation units receiving P–SMBP project use power are currently paying as much as 30 times the project use power rate and pay 100 percent of the capital costs of their project, but 20 percent is typical repayment for a P–SMBP irrigation unit.

Response: The methodology for ability to pay is a form of recognized farm budgeting techniques employed by USDA, the Cooperative Extension Service, and other entities. The assertions that other projects can pay their full costs appear to be anecdotal, and no definitive studies have been put forth that make a full comparison of the fixed and variable costs of like farm enterprises in the private and Federal sector. Farm budget studies for Reclamation ability-to-pay analysis first account for all on-farm expenses, including on-farm irrigation expense. It is out of the remaining net farm income that district operating expense, project capital, and project use power are paid. Farms using groundwater or pumping out of surface streams do not have large distribution system capital and operating expenses assigned to them as do Reclamation projects.

Comment: The 1999 Power Repayment Study used as a basis for the proposed rate shows an annual decrease in energy sales due to depletions associated with future irrigation development, but Reclamation has stated most irrigation developments are no longer feasible; therefore, the ultimate development concept should be changed and more realistic energy numbers used throughout the repayment period.

Response: Regardless of the current economic feasibility of future P–SMBP irrigation development, Federal statutes require that the ultimate development concept remain the standard by which the economic, financial, and hydrologic assumptions are incorporated into overall P–SMBP financial analyses. Reports to the Congress on future project feasibility have not resulted in any legislation that would permit changes. Moreover, removing the depletions because of implied infeasibility would also have to be accompanied by removing the irrigation investment associated with those depletions and changing the cost allocations, including suballocation of investment associated with project use power and reservoir storage. All of these components are interrelated to ultimate development and cannot be treated separately.

Comment: Replacement costs in the power repayment study for year 2000 to 2099, appear high ($2,638,052,924) compared to the actual historical expenses for 1950 to 1999 ($159,391,916).

Response: Historical costs were booked at their acquisition cost. Reclamation's construction cost index shows that the powerplant cost index has gone from 26 in 1950 to 231 in 1999, over an 800 percent increase. Comparing today's cost with historical costs on a nominal basis will generally show today's costs to be higher because of inflation alone. Comparison would have to be done in constant dollar values to draw any meaningful conclusions.

Comment: The power repayment study shows an investment of $1.3 billion from 1970 to 1998, and commentor believes the additional investment is mostly due to transmission costs for preference customers as most of the power system to serve irrigation was in place prior to 1970. The commentor recommends that Reclamation not utilize all the investment costs since 1970, as those costs are a benefit to firm power customers. If all the investment costs and associated OM&R costs were not utilized in the study the proposed rate would be different (lower).

Response: The system as a whole is integrated and irrigation would most likely be as affected by outages on the grid as the commercial customers, regardless of whose load caused the outage. Since irrigation pumping would benefit from overall increased reliability, it should share in the cost of those benefits. Seventy-six million of the $1.3 billion is due to the new power generation at Buffalo Bill Dam.

Comment: Peaking sales appear to decrease in the power repayment study in out years due to depletion associated with future irrigation development which we do not believe will take place.

Response: This is associated with the ultimate development concept and cannot change without congressional action.

Comment: The column titled ''Other Revenue'' in the power repayment study includes peaking, maintenance, and other power sales.

Response: Yes.

Comment: If adjustments were made in the study for decreased energy sales due to depletion, transmission costs since 1970, reduced replacement cost estimates, and power sales for peaking, the rate would be reduced.

Response: Yes, but depletion, which reduces energy and peaking power sales, is associated with the ultimate development concept and cannot be changed without congressional action. Additions after 1970 were for system reliability, and replacement dollars are current-day dollars instead of inflated dollars.

Comment: Congressional intent was that the project use power rate remains at 2.5 mils/kWh.

Response: In 1944, 2.5 mils/kWh was sufficient to cover OM&R costs. OM&R costs have significantly increased, and since the Act does not direct that the project use power rate be fixed, but only be ''within'' the ability-to-pay, the rate is being adjusted to reflect current costs.

Comment: A project use power rate adjustment would discourage new irrigation development and jeopardize existing projects.

Response: Existing projects and new irrigation developments currently authorized, will pay subject to their ability to pay. Newly authorized projects will be subject to the new project use power rate subject to specific legislation.

Comment: Instead of a rate adjustment, Reclamation should take a lead role in securing additional P–SMBP power for new and existing irrigation projects as well as individual irrigators.

Response: With respect to construction of any new projects or inclusion of existing non-Federal projects into the P–SMBP, Reclamation must operate according to its congressionally mandated authority.

Comment: Reclamation has chosen not to conduct ability-to-pay tests on P–SMBP irrigation projects in conjunction with its proposed rate adjustment, yet states the application of the ability to pay will reduce the rate to the current level of 2.5 mils/kWh.

Response: Over the past several years, ability-to-pay studies have been conducted on 10 irrigation units and updated on 3 others. Twelve of the 13 studies found no additional ability to pay. One unit had a small increase in ability to pay. Some existing and all renewed repayment and water service contracts will contain requirements for periodic reviews of ability to pay, normally accomplished on a 5-year basis, in accordance with the Commissioner's ''Ability-To-Pay Policy'' dated July 7, 1999. The periodic reviews will be used, along with published agricultural statistics, as indicators of economic conditions; if they indicate the likely potential of additional ability

to pay, it would lead to ability-to-pay studies for project use power contractors.

Comment: Since Reclamation intends to maintain the effective project use power rate at 2.5 mils/kWh, through application of the ability-to-pay test, what is the purpose of Reclamation's proposed rate adjustment?

Response: While present economic conditions create depressed agriculture and the majority of the irrigators will pay 2.5 mils/kWh, the adjusted rate will allow Reclamation to capture additional revenues if and when the economics of agriculture improve. It will also provide current rate structure for use in decisions and legislation related to proposed new projects. Reclamation is required to have accurate numbers for operations, maintenance, and replacement costs.

NEPA

In compliance with the National Environmental Policy Act of 1969 (NEPA), 43 U.S.C. 4321 *et seq.* Council on Environmental Quality Regulations (40 CFR parts 1500–1508); and the Department of Energy's NEPA Implementing Procedures (10 CFR part 1021), Reclamation has determined that this action is categorically excluded from the preparation of an Environmental Assessment or Environmental Impact Statement.

Power Rate Schedules

The existing rate schedule MRB–P10 placed into effect on November 1, 1986, will be replaced by rate schedule MRB–P11. Rate Schedule MRB–P11 is as follows: *Effective:* 30 days after being published in the **Federal Register**. *Location:* In the areas generally described as central and eastern Montana, North and South Dakota, Nebraska, eastern Colorado, Wyoming, Kansas, western Iowa, and western Minnesota.

Applicable

For use in the operation of congressionally authorized irrigation and drainage pumping plants on irrigation projects for power service supplied through metering at specified points of delivery.

Character and Conditions of Service

Alternating current, 60 hertz, three phase, delivered and metered at the point identified in the contract upon demand during the summer irrigation season.

Availability

Available at 60 hertz at the pumping plant upon demand during the summer irrigation season.

Monthly Rate

Demand Charge: None.

Energy Charge: 10.76 mils/kWh for all energy use; subject to ability-to-pay but not less than 2.5 mils/kWh.

Seasonal Minimum Bill: $2.75 per kilowatt of the maximum 30-minute integrated demand established during service months of each year specified in the contract.

Adjustments

For Power Factor: The customer will normally be required to maintain a power factor at a point of delivery of not less than 95 percent lagging or leading.

Approval of Project Use Power Rate by the Commissioner, Bureau of Reclamation

The Commissioner approved the rate of 10.76 mils/kWh by memorandum dated January 15, 2002.

Dated: January 23, 2002.

Gerald W. Kelso,

Assistant Regional Director.

[FR Doc. 02–4025 Filed 2–19–02; 8:45 am]

BILLING CODE 4310–MN–P

DEPARTMENT OF JUSTICE

Drug Enforcement Administration

Importation of Controlled Substances; Notice of Application

Pursuant to section 1008 of the Controlled Substances Import and Export Act (21 U.S.C. 958(i)), the Attorney General shall, prior to issuing a registration under this Section to a bulk manufacturer of a controlled substance in Schedule I or II and prior to issuing a regulation under Section 1002(a) authorizing the importation of such a substance, provide manufacturers holding registrations for the bulk manufacture of the substance an opportunity for a hearing.

Therefore, in accordance with Section 1301.34 of Title 21, Code of Federal Regulations (CFR), notice is hereby given that on March 7, 2001, Cedarburg Pharmaceutical LLC, 870 Badger Circle, Grafton, Wisconsin 53024, made application to the Drug Enforcement Administration to be registered as an importer of the basic classes of controlled substances listed below:

Drug	Schedule
Codeine (9050)	II
Morphine (9300)	II
Thebaine (9333)	II

The firm plans to import the listed controlled substances to repackage and sell as bulk controlled substances, and also use as starting materials to manufacture bulk active pharmaceuticals ingredients.

Any manufacturer holding, or applying for, registration as a bulk manufacturer of these basic classes of controlled substances may file written comments on or objections to the application described above and may, at the same time, file a written request for a hearing on such application in accordance with 21 CFR 1301.43 in such form as prescribed by 21 CFR 1316.47.

Any such comments, objections, or requests for a hearing may be addressed, in quintuplicate, to the Deputy Assistant Administrator, Office of Diversion Control, Drug Enforcement Administration, United States Department of Justice, Washington, DC 20537, Attention: DEA Federal Register Representative (CCR), and must be filed no later than (30 Days from publication).

This procedure is to be conducted simultaneously with and independent of the procedures described in 21 CFR 1301.34(b), (c), (d), (e), and (f). As noted in a previous notice at 40 FR 43745–46 (September 23, 1975), all applicants for registration to import basic classes of any controlled substances in Schedule I or II are and will continue to be required to demonstrate to the Deputy Assistant Administrator, Office of Diversion Control, Drug Enforcement Administration that the requirements for such registration pursuant to 21 U.S.C. 958(a), 21 U.S.C. 823(a), and 21 CFR 1301.34(a), (b), (c), (d), (e), and (f) are satisfied.

Dated: February 6, 2002.

Laura M. Nagel,

Deputy Assistant Administrator, Office of Diversion Control, Drug Enforcement Administration.

[FR Doc. 02–4057 Filed 2–19–02; 8:45 am]

BILLING CODE 4410–09–M

DEPARTMENT OF JUSTICE

Drug Enforcement Administration

Manufacturer of Controlled Substances; Notice of Registration

By Notice dated August 9, 2001, and published in the **Federal Register** on August 10, 2001, (66 FR 42240), Roche Diagnostics Corporation, Attn:

Regulatory Compliance, 9115 Hague Road, Indianapolis, Indiana 46250, made application by renewal to the Drug Enforcement Administration (DEA) to be registered as a bulk manufacturer of the basic classes of controlled substances listed below:

Drug	Schedule
Lysergic acid diethylamide (7315)	I
Tetrahydrocannabinols (7370)	I
Phencyclidine (7471)	II
Benzoylecgonine (9180)	II
Methadone (9250)	II
Morphine (9300)	II

Roche Diagnostics Corporation plans to manufacture small quantities of the above listed controlled substances for incorporation in drug of abuse detection kits.

No comments or objections have been received. DEA has considered the factors in Title 21, United States Code, section 823(a) and determined that the registration of Roche Diagnostics Corporation to manufacture the listed controlled substances is consistent with the public interest at this time. DEA has investigated Roche Diagnostics Corporation to ensure that the company's continued registration is consistent with the public interest. These investigations have included inspection and testing of the company's physical security systems, audits of the company's records, verification of the company's compliance with state and local laws, and a review of the company's background and history. Therefore, pursuant to 21 U.S.C. section 823 and 28 CFR secs. 0.100 and 0.104, the Deputy Assistant Administrator, Office of Diversion Control, hereby orders that the application submitted by the above firm for registration as a bulk manufacturer of the basic classes of controlled substances listed above is granted.

Dated: February 1, 2002.

Laura M. Nagel,

Deputy Assistant Administrator, Office of Diversion Control, Drug Enforcement Administration.

[FR Doc. 02–4056 Filed 2–19–02; 8:45 am]

BILLING CODE 4410–09–M

OVERSEAS PRIVATE INVESTMENT CORPORATION

Submission for OMB Review; Comment Request

AGENCY: Overseas Private Investment Corporation

ACTION: Request for comments.

SUMMARY: Under the provisions of the Paperwork Reduction Act (44 U.S.C. chapter 35), agencies are required to publish a Notice in the **Federal Register** notifying the public that the Agency is preparing an information collection request for OMB review and approval and to request public review and comment on the submission. OPIC published its first Federal Register Notice on this information collection request on December 12, 2002, in 66 FR 239, p. 64312, at which time a 60-calendar day comment period was announced. This comment period ended February 11, 2002. No comments were received in response to this notice.

This information collection submission has now been submitted to OMB for review. Comments are again being solicited on the need for the information, its practical utility, the accuracy of the Agency's burden estimate, and on ways to minimize the reporting burden, including automated collection techniques and uses of other forms of technology. The proposed form under review is summarized below.

DATES: Comments must be received on or before March 22, 2002.

ADDRESSES: Copies of the subject form and the request for review submitted to OMB may be obtained from the Agency Submitting Officer. Comments on the form should be submitted to the OMB Reviewer.

FOR FURTHER INFORMATION CONTACT:

OPIC Agency Submitting Officer

Carol Brock, Records Manager, Overseas Private Investment Corporation, 1100 New York Avenue, NW., Washington, DC 20527; 202/336–8563.

OMB Reviewer

David Rostker, Office of Information and Regulatory Affairs, Office of Management and Budget, New Executive Office Building, Docket Library, Room 10102, 725 17th Street, NW., Washington, DC 20503, 202/395–3897.

Summary of Form Under Review

Type of Request: Form Amendment.

Title: Application for Political Risk Investment Insurance.

Form Number: OPIC–52.

Frequency of Use: Once per investor, per project.

Type of Respondents: Business or other institutions.

Standard Industrial Classification Codes: All.

Description of Affected Public: U.S. companies investing overseas.

Reporting Hours: 6½ hours per project.

Number of Responses: 150 per year.

Federal Cost: $24,300 per year.

Authority for Information Collection: Sections 231 and 234(a) of the Foreign Assistance Act of 1961, as amended.

Abstract (Needs and Uses): The OPIC 52 form is the principal document used by OPIC to determine the investor's and the project's eligibility, assess the environmental impact and developmental effects of the project, measure the economic effects for the United States and the host country economy, and collect information for underwriting analysis.

Dated: February 13, 2002.

Rumu Sarkar,

Assistant General Counsel, Administrative Affairs, Department of Legal Affairs.

[FR Doc. 02–4018 Filed 2–19–02; 8:45 am]

BILLING CODE 3210–01–M

RAILROAD RETIREMENT BOARD

Proposed Data Collection; Comment Request

SUMMARY: In accordance with the requirement of section 3506(c)(2)(A) of the Paperwork Reduction Act of 1995 which provides opportunity for public comment on new or revised data collections, the Railroad Retirement Board will publish periodic summaries of proposed data collections.

Comments are invited on: (a) Whether the proposed information collection is necessary for the proper performance of the functions of the agency, including whether the information has practical utility; (b) the accuracy of the RRB's estimate of the burden of the collection of the information: (c) ways to enhance the quality, utility, and clarity of the information to be collected; and (d) ways to minimize the burden related to the collection of information on respondents, including the use of automated collection techniques or other forms of information technology.

Title and Purpose of information collection: Statement Regarding Contributions and Support: OMB 3220–0099 Under section 2 of the Railroad Retirement Act, dependency on an employee for one-half support at the time of an employee's death can be a condition affecting entitlement to a survivor annuity and can affect the amount of both spouse and survivor annuities. One-half support is also a condition which may negate the public service pension offset in Tier I for a spouse or widow(er). The Railroad Retirement Board (RRB) utilizes Form G–134, Statement Regarding Contributions and Support, to secure

information needed to adequately determine if the applicant meets the one-half support requirement. One form is completed by each respondent. Non-burden impacting editorial and formatting changes are being proposed to Form G–134 for clarification purposes. Also, enhanced program monitoring and evaluation of this form last year showed that the completion time needed to be increased significantly because the annuitant needed time to gather the necessary information from many personal finance records not normally kept on hand.

The estimated annual respondent burden is as follows:

ESTIMATE OF ANNUAL RESPONDENT BURDEN

Form #	Annual responses	Estimated completion time (min)	Burden (hrs)
G–134			
With assistance	75	147	184
Without assistance	25	180	75
Total	100		259

Additional Information or Comments: To request more information or to obtain a copy of the information collection justification, forms, and/or supporting material, please call the RRB Clearance Officer at (312) 751–3363. Comments regarding the information collection should be addressed to Ronald J. Hodapp, Railroad Retirement Board, 844 N. Rush Street, Chicago, Illinois 60611–2092. Written comments should be received within 60 days of this notice.

Chuck Mierzwa,

Clearance Officer.

[FR Doc. 02–4026 Filed 2–19–02; 8:45 am]

BILLING CODE 7905–01–M

SECURITIES AND EXCHANGE COMMISSION

[Release No. IC–25420; File No. 812–12384]

IDS Life Insurance Company, et al., Notice of Application

February 12, 2002.

AGENCY: Securities and Exchange Commission (''Commission'').

ACTION: Notice of Application for an Order Pursuant to section 11(a) of the Investment Company Act of 1940, as amended (the ''Act'') approving the terms of an offer of exchange.

APPLICANTS: IDS Life Insurance Company (''IDS Life''), IDS Life Variable Account 10 (''Account 10'') and IDS Life Accounts F, G, H, IZ, JZ, KZ, LZ, MZ, N, PZ, QZ, RZ, SZ and TZ (the ''Old Accounts,'' collectively with Account 10, the ''Accounts'') (collectively, the ''Applicants'').

SUMMARY OF APPLICATION: Applicants seek an order pursuant to section 11(a) of the Act approving the terms of a proposed offer of exchange of new American Express Retirement Advisor Advantage Variable Annuity contracts issued by IDS Life and made available through Account 10 (''RAVA Advantage'') for certain outstanding annuity contracts issued by IDS Life and made available through the Old Accounts (the ''Old Contracts,'' collectively with RAVA Advantage, the ''Contracts'').

FILING DATE: The Application was filed on December 28, 2000, and amended and restated on November 15, 2001, December 6, 2001, and February 8, 2002.

HEARING OR NOTIFICATION OF HEARING: An order granting the Application will be issued unless the Commission orders a hearing. Interested persons may request a hearing by writing to the Secretary of the Commission's and serving Applicants with a copy of the request, personally or by mail. Hearing requests should be received by the Commission by 5:30 p.m. on March 11, 2002, and should be accompanied by proof of service on Applicants, in the form of an affidavit or, for lawyers, a certificate of service. Hearing requests should state the nature of the writer's interest, the reason for the request, and the issues contested. Persons who wish to be notified of a hearing may request notification by writing to the Secretary of the Commission.

ADDRESSES: Secretary, Securities and Exchange Commission, 450 Fifth Street, NW, Washington, DC 20549–0609. Applicants, Mary Ellyn Minenko, Vice President and Group Counsel, American Express Financial Advisors Inc., 50607 AXP Financial Center, Minneapolis, MN 55474.

FOR FURTHER INFORMATION CONTACT: Zandra Y. Bailes, Senior Counsel, or Lorna MacLeod, Branch Chief, Office of Insurance Products, Division of Investment Management, at (202) 942–0670.

SUPPLEMENTARY INFORMATION: The following is a summary of the Application. The complete Application may be obtained for a fee from the Commission's Public Reference Branch, 450 Fifth Street, NW, Washington, DC 20549–0102 (telephone (202) 942–8090).

Applicants' Representations

1. IDS Life is a stock life insurance company organized in 1957 under the laws of the State of Minnesota. IDS Life is registered with the Commission as a broker-dealer under the Securities Exchange Act of 1934 and is a member of the National Association of Securities Dealers. IDS Life is a wholly owned subsidiary of American Express Financial Corporation. IDS Life is the issuer and principal underwriter of the Contracts funded through the Accounts.

2. Account 10 is a segregated asset account of IDS Life. Account 10 funds the variable benefits available under RAVA Advantage. Account 10 and its component subaccounts are registered together with the Commission as a single unit investment trust under the Act (File No. 811–07355).

3. The Old Accounts are segregated asset accounts of IDS Life. The Old Accounts fund the variable benefits available under the IDS Life Variable Retirement Annuity (''VRA''), the IDS Life Combination Retirement Annuity (''CRA''), the IDS Life Flexible Annuity (''Flex'') and the IDS Life Employee Benefit Annuity (''EBA''). The Old Accounts are registered together with the Commission as a single unit investment trust under the Act (File No. 811–3217).

4. Applicants assert that in recent years the variable annuity marketplace has become increasingly competitive. Many of the purchasers of variable annuity contracts in the 1980s and early 1990s are at, or close to, the expiration of their deferred sales charge period, and the contract values of many contracts are no longer subject to a deferred sales charge. Holders of such contracts have become prime targets for

competitors' variable annuity sales efforts. One feature offered to variable annuity purchasers is a ''bonus'' or ''credit'' funded from the insurer's general account, generally ranging from 1–4% of contract value. IDS Life has experienced the effects of these ''bonus offers'' through the loss of a portion of its Old Contracts.

5. Applicants state that IDS Life's competitors are permitted to make bonus offers to IDS Life's Old Contract owners because offers of exchange to contract owners of unaffiliated insurance companies are not prohibited by section 11 of the Act by virtue of a no-action position granted to Alexander Hamilton Funds (pub. avail. July 20, 1994) (''Alexander Hamilton''). Applicants state that Alexander Hamilton stands for the proposition that, except for limited exceptions, exchange offers between unaffiliated investment companies are not prohibited under section 11. Consistent with section 11(a), therefore, a fund may impose a contingent deferred sales charge (''CDSC'') on shares purchased by investors with proceeds of shares from an unaffiliated fund.

6. Applicants assert that, but for the existence of the affiliated nature of the exchange, IDS Life would be able to offer an exchange program to its existing Old Contract owners that is similar to its competitors' programs. However, unlike its competitors who may make bonus offers to Old Contract owners, IDS Life is constrained from making a similar offer without first obtaining Commission approval of the terms of the exchange.

7. Applicants state that in response to this competitive situation IDS Life has developed an exchange offer (''Exchange Offer'') that would give eligible owners of Old Contracts the opportunity to exchange their existing Old Contracts for RAVA Advantage, an enhanced Contract that offers a lower mortality and expense risk (''M&E'') charge than the Old Contracts, credits on certain Purchase Payments (''Purchase Payment Credits''), more investment options (including all investment options available under the Old Contracts) and optional enhanced death benefits. IDS Life would apply a credit to certain exchanges (''Exchange Credit'') that would be in addition to any Purchase Payment Credit for which the Contract owner would otherwise be eligible under the RAVA Advantage Contract. Applicants state that the terms of the Exchange Offer are designed to respond to IDS Life's competitive dilemma and to assure that persisting Contract owners who accept the Exchange Offer receive an immediate and enduring economic benefit.

The New Contract

8. RAVA Advantage is registered under the Securities Act of 1933 (the ''1933 Act'') (File No. 333–79311). RAVA Advantage may be issued as a nonqualified annuity for after-tax contributions only, or as a qualified annuity under the following retirement plans: (i) Individual Retirement Annuities (''IRAs''); (ii) Simplified Employee Pension (''SEP'') plans; (iii) Section 401(k) plans; (iv) custodial and trusteed plans; or (v) Tax-Sheltered Annuities (''TSAs''). RAVA Advantage may be purchased: (i) with a minimum initial payment of $1,000 for qualified annuities or $2,000 for nonqualified annuities; or (ii) in minimum installments of $50 per month or $23.08 biweekly under a scheduled payment plan. An owner may make additional payments, which require a $50 minimum (unless payments are made by installments under a scheduled payment plan), subsequent to the initial payment (initial payments and subsequent additional payments are individually and collectively referred to herein as ''Purchase Payments''). Maximum limitations on Purchase Payments are imposed for the first year and subsequent years, depending on the age of the owner or annuitant.

9. Owners of RAVA Advantage Contracts may allocate their Purchase Payments among 56 subaccounts of Account 10. The subaccounts invest in 56 corresponding funds or portfolios (collectively, ''Investment Funds''). IDS Life, at a later date, may determine to create additional subaccounts to invest in any additional Investment Funds as may now or in the future be available. IDS Life, from time to time, also may combine or eliminate subaccounts, or transfer the assets to and from subaccounts. IDS Life also may substitute the Investment Funds in which the subaccounts invest under certain conditions. RAVA Advantage also offers a fixed account investment option with a guaranteed interest rate of at least 3% on an annual basis.

10. Owners of RAVA Advantage Contracts may transfer contract values among the RAVA Advantage subaccounts without charge, although IDS Life reserves the right to limit the number of transfers in a contract year. Transfers to and from the fixed account are permitted, subject to certain restrictions described in the prospectus for the RAVA Advantage Contracts.

11. Each time IDS Life receives a Purchase Payment from an owner, it allocates to the owner's RAVA Advantage account a Purchase Payment Credit equal to: (i) 1% of each Purchase Payment received if the owner elected the ten-year CDSC period for RAVA Advantage, or if the owner elected the seven-year CDSC period and the initial Purchase Payment is at least $100,000; or (ii) 2% of each Purchase Payment received if the owner elected the ten-year CDSC period and the initial Purchase Payment is at least $100,000. IDS Life funds Purchase Payment Credits from its general account assets. IDS Life recaptures certain Purchase Payment Credits from an owner under the following circumstances: (i) any Purchase Payment Credit applied if the owner returns the RAVA Advantage Contract to IDS Life for a refund during the free look period; (ii) Purchase Payment Credits applied within twelve months preceding the date of death that results in a lump sum death benefit under the RAVA Advantage Contract; or (iii) Purchase Payment Credits applied within twelve months preceding a request for a surrender due to the owner or annuitant's confinement to a nursing home. The amount the owner receives in each of these circumstances always will equal and normally will exceed the surrender value of the RAVA Advantage Contract.

12. The owner of a RAVA Advantage Contract can access contract values at any time before annuity payouts begin by means of partial surrenders or a full surrender. In addition, RAVA Advantage permits the owner to withdraw certain amounts without incurring a CDSC (the ''Free Withdrawal Amount''). Under RAVA Advantage, this Free Withdrawal Amount equals earnings or up to 10% of the prior anniversary contract value per contract year (if not already included in earnings).

A. The RAVA Advantage Contract standard death benefit is available at no extra charge. This standard death benefit provision states that, upon the earlier of the owner's or annuitant's death, before annuity payouts begin and while the Contract is in force, IDS Life will pay the following death benefits to the designated beneficiary: (i) if both the owner and annuitant are age 80 or younger on the date of death, the beneficiary will receive the greatest of (a) the contract value; (b) Purchase Payments, minus any adjusted partial surrenders; or (c) the contract value as of the most recent sixth contract anniversary, plus any Purchase Payments made, and minus any adjusted partial surrenders since that anniversary; or (ii) if either the owner or annuitant are age 81 or older on the date of death, the beneficiary receives the

greater of (a) the contract value; or (b) Purchase Payments, minus any adjusted partial surrenders.

14. The RAVA Advantage Contract also offers three optional death benefits. The Maximum Anniversary Value Death Benefit (the ''MAV Death Benefit'') is an optional death benefit that is available at the election of the Contract owner for an extra cost of 0.15% deducted from the contract value on the contract anniversary at the end of each contract year. This MAV Death Benefit is available (in approved states) if both the owner and annuitant are age 75 or younger at Contract issue. The MAV Death Benefit states that, upon the earlier of the owner's or annuitant's death, before annuity payouts begin and while the Contract is in force, IDS Life will pay the designated beneficiary the Maximum Anniversary Value (the ''MAV''). On the first contract anniversary, IDS Life sets the MAV equal to the highest of the (i) current contract value; or (ii) total Purchase Payments minus adjusted partial surrenders. Every contract anniversary after that, through the earlier of the owner's or annuitant's age 80, IDS Life compares the previous anniversary's MAV plus subsequent Purchase Payments less subsequent adjusted partial surrenders to the contract value and resets the MAV if the current contract value is higher. IDS Life stops resetting the MAV after the owner or annuitant reaches age 81. However, IDS Life continues to add subsequent Purchase Payments and subtract adjusted partial surrenders from the MAV.

15. The Enhanced Earnings Death Benefit (the ''EEB'') is an optional death benefit that is available at the election of the Contract owner at an extra cost of 0.30% deducted from the contract value on the contract anniversary at the end of each contract year. This benefit is available (in approved states) if both the owner and annuitant are age 75 or younger at Contract issue. The EEB is only available under nonqualified annuities. The EEB states that, upon the earlier of the owner's or annuitant's death, after the first contract anniversary but before annuity payouts begin and while this Contract is in force, IDS Life will pay the designated beneficiary the standard death benefit or the MAV Death Benefit, if applicable plus: (i) 40% of earnings at death if the owner and the annuitant were under age 70 on the rider effective date, up to a maximum of 100% of Purchase Payments not previously surrendered that are one or more years old; or (ii) 15% of earnings at death if the owner or the annuitant were age 70 to 75 on the rider effective date, up to a maximum of 37.5% of Purchase Payments not previously surrendered that are one or more years old.

16. The Enhanced Earnings Benefit Plus (the ''EEP'') is an optional death benefit that is available at the election of the Contract owner at an extra cost of 0.40% deducted from the contract value on the contract anniversary at the end of each contract year. This benefit is available (in approved states) if both the owner and annuitant are age 75 or younger at Contract issue. The EEP is only available under nonqualified annuities purchased through an exchange. The EEP states that, upon the earlier of the owner's or annuitant's death, after the first contract anniversary but before annuity payouts begin and while this Contract is in force, IDS Life will pay the designated beneficiary: (i) EEP Part I benefits, which equal the benefits payable under the EEB described above; plus (ii) EEP Part II benefits, which equal a percentage of exchanged Purchase Payments identified at issue and not previously surrendered ranging from 0% to 20%, depending on the contract year and the age of the owner and annuitant.

17. The RAVA Advantage Contract contains five annuity payout options: (i) Life annuity—no refund; (ii) life annuity with five, ten or 15 years certain; (iii) life annuity—installment refund; (iv) joint and last survivor life annuity—no refund; and (v) payouts for a specified period. IDS Life also may agree to other payout arrangements. Annuity payouts are available on a fixed or variable basis, or a combination of both.

18. A RAVA Advantage Contract owner can elect to have the variable subaccount portion of the contract value automatically rebalanced on either a quarterly, semi-annual or annual basis, based on the allocations chosen by the Contract owner. There is no additional cost for asset rebalancing.

19. Under RAVA Advantage, IDS Life assesses a CDSC against partial or full surrenders in excess of the Free Withdrawal Amount. IDS Life applies a CDSC on each Purchase Payment. The length of time from receipt of a Purchase Payment to the time of surrender determines the percentage of CDSC. Under the seven-year CDSC period, the CDSC ranges from 7% in year 1 to 0% in year 8 and after. Under the ten-year CDSC period, the CDSC ranges from 8% in year 1 to 0% in year 11 and after. The RAVA Advantage Contract provides for a waiver of the CDSC if the owner or annuitant is confined to a nursing home, and has been for the prior 90 days, and confinement began after the contract date. Additionally, IDS Life does not assess a CDSC on contract earnings; Free Withdrawal Amounts; required minimum distributions (for those amounts required to be distributed from the RAVA Advantage Contract); amounts refunded during the free look period; death benefits; or if payments are made under any annuity payout option.

20. During the life of the RAVA Advantage Contract, IDS Life deducts an M&E charge at an annual rate of 0.95% of the average daily subaccount value for nonqualified annuity Contracts and 0.75% of the average daily subaccount value for qualified annuity Contracts. IDS Life deducts a charge for administrative expenses annually from the contract value of each RAVA Advantage Contract. The annual contract administrative charge is $30 per contract year. IDS Life waives this charge when the contract value, or total Purchase Payments made less any Purchase Payments surrendered, is $50,000 or more on the current contract anniversary.

21. IDS Life deducts premium taxes of up to 3.5%, if applicable. Currently, IDS Life deducts any applicable premium tax when annuity payouts begin. However, IDS Life reserves the right to deduct this tax at other times such as when the Contract is surrendered.

22. Assets invested in the Investment Funds are charged with the annual operating expenses of those Funds.

The Old Contracts

23. VRA and CRA are registered together under the 1933 Act (File No. 2–73114). IDS Life no longer offers VRA Contracts. IDS Life offers CRA contracts only for limited purposes. VRA and CRA both were issued as nonqualified annuities for after-tax contributions only, or as qualified annuities under the following retirement plans: (i) IRAs; (ii) SEP plans; (iii) Section 401(k) plans; (iv) custodial and trusteed plans; (v) TSAs, or (vi) Section 457 plans. VRA was purchased with a single Purchase Payment between $5,000 and $500,000. No additional Purchase Payments are allowed for VRA. CRA may be purchased (i) with a minimum initial Purchase Payment of $600; or (ii) in minimum installments of $50 per month or $23.08 biweekly under a scheduled payment plan. An owner may make additional Purchase Payments to CRA, which require a $50 minimum (unless Purchase Payments are made by installments under a scheduled payment plan), subsequent to the initial Purchase Payment. Maximum limitations on Purchase Payments are imposed for the first year and subsequent years, depending on

whether the annuity is nonqualified or qualified. Participants in the CRA Select University of Wisconsin TSA Plan (''CRA Select'') may buy CRA with installment payments of $200 to $25,000 annually.

24. Owners of VRA and CRA Contracts may allocate their Purchase Payments among 14 Old Accounts that invest in 14 corresponding Investment Funds (all of which currently are available under RAVA Advantage). IDS Life, at a later date, may determine to create additional Accounts to invest in any additional Investment Funds as may now or in the future be available. CRA also offers a fixed account investment option with a guaranteed interest rate of 3.5% to 4% on an annual basis depending on when the CRA Contract was issued. VRA does not have a fixed account investment option.

25. Owners of VRA and CRA Contracts may transfer contract values among the Old Accounts without charge. Transfers to and from CRA's fixed account are permitted, subject to certain restrictions described in the prospectus for the CRA Contracts.

26. The owner of a VRA or CRA Contract can access contract values at any time before annuity payouts begin by means of partial surrenders or a full surrender. In addition, VRA permits the owner a Free Withdrawal Amount of up to 10% of the initial Purchase Payment amount each year after the first without incurring a CDSC. CRA Select offers an annual Free Withdrawal Amount of 10% of the contract value at the beginning of each contract year. There are no other Free Withdrawal Amounts under CRA.

27. VRA and CRA Contracts death benefit provisions state that, upon the earlier of the owner's or annuitant's death before annuity payouts begin and while the Contract is in force, IDS Life will pay the following death benefits to the designated beneficiary: (i) if death occurs before the annuitant's 75th birthday, the beneficiary receives the greater of (a) the contract value; or (b) Purchase Payments, minus any surrenders, or (ii) if death occurs on or after the annuitant's 75th birthday, the beneficiary receives the contract value.

28. The VRA and CRA Contracts contain the same annuity payout options as the RAVA Advantage Contract. Annuity payouts are available on a fixed or variable basis, or a combination of both.

29. Under VRA, IDS Life assesses a CDSC against partial or full surrenders in excess of the Free Withdrawal Amount. The CDSC applies to surrenders in the first seven contract years. IDS Life assesses a CDSC as a percentage of the amount surrendered. The CDSC ranges from 7% in the first contract year to 0% after 7 contract years. Under CRA, IDS Life assesses a CDSC against partial or full surrenders (in excess of the Free Withdrawal Amount for CRA Select). The CDSC is a percentage of the amount surrendered. Three separate CDSC periods apply to three different versions of CRA. For the original CRA, which is no longer sold, the CDSC applies to surrenders in the first eleven contract years and ranges from 7% in the first contract year to 0% after 11 contract years. For CRA Select, which currently is sold to fund the University of Wisconsin TSA Plan, the CDSC applies to surrenders in the first eight contract years and ranges from 7% in the first contract year to 0% after 8 contract years. For the CRA version that currently is sold for conversions from American Express Retirement Services or other IDS Life retirement annuities under which conversion is available, the CDSC applies to surrenders in the first seven contract years and ranges from 6% in the first contract year to 0% after 7 contract years. Under all VRA and CRA Contracts, the CDSC is further limited so that it will never exceed 8.5% of aggregate Purchase Payments made to the Contract. IDS Life does not assess a CDSC on Free Withdrawal Amounts under any VRA or CRA Select Contract; required minimum distributions (for those amounts required to be distributed from the VRA or CRA Contract); amounts refunded during the free look period; death benefits; or if payments are made under any annuity payout option.

30. During the life of each VRA and CRA Contract, IDS Life deducts an M&E charge at an annual rate of 1% of the average daily variable account value. IDS Life deducts a charge for administrative expenses annually from the contract value of each VRA and CRA Contract. The annual contract administrative charge is $20 per contract year for VRA and $30 per contract year for CRA.

31. IDS Life deducts premium taxes of up to 3.5%, if applicable. However, IDS Life reserves the right to deduct this tax at other times such as when Purchase Payments are made or when the Contract is surrendered.

32. Assets invested in the Investment Funds are charged with the annual operating expenses of those Funds.

33. Flex is registered under the 1933 Act (File No. 33–4173). IDS Life no longer offers Flex Contracts. Flex was issued as a nonqualified annuity for after-tax contributions only, or as a qualified annuity under the following retirement plans: (i) IRAs; (ii) SEP plans; (iii) Section 401(k) plans; (iv) custodial and trusteed plans; (v) TSAs; or (vi) Section 457 plans. Flex was purchased (i) with a minimum initial Purchase Payment of $1,000 for qualified annuities or $2,000 for nonqualified annuities; or (ii) in minimum installments of $50 per month or $23.08 biweekly under a scheduled payment plan. An owner may make additional Purchase Payments, which require a $50 minimum (unless Purchase Payments are made by installments under a scheduled payment plan), subsequent to the initial Purchase Payment. Maximum limitations on Purchase Payments are imposed for the first year, depending on the age of the owner or annuitant, and for each subsequent year.

34. Owners of Flex Contracts may allocate their Purchase Payments among the 14 Old Accounts that invest in 14 corresponding Investment Funds (all of which currently are available under RAVA Advantage). IDS Life, at a later date, may determine to create additional Accounts to invest in any additional Investment Funds as may now or in the future be available. Flex also offers a fixed account investment option with guaranteed interest rates ranging from 3% to 4% on an annual basis, depending on when the Flex Contract was issued.

35. Owners of Flex Contracts may transfer contract values among the Old Accounts without charge. Transfers to and from the fixed account are permitted, subject to certain restrictions described in the prospectus for the Flex Contracts.

36. The owner of a Flex Contract can access contract values at any time before annuity payouts begin by means of partial surrenders or a full surrender. In addition, Flex permits the owner a Free Withdrawal Amount of contract earnings without incurring a CDSC.

37. The Flex Contract death benefit provision states that, upon the earlier of the owner's or annuitant's death before annuity payouts begin and while the Contract is in force, IDS Life will pay the following death benefits to the designated beneficiary: (i) if death occurs before the annuitant's 75th birthday, the beneficiary receives the greatest of (a) the contract value; or (b) the contract value as of the most recent sixth contract anniversary, minus any surrenders since that anniversary; or (c) Purchase Payments, minus any surrenders; or (ii) if death occurs on or after the annuitant's 75th birthday, the beneficiary receives the greater of (a) the contract value; or (b) the contract value as of the most recent sixth contract anniversary, minus any surrenders since that anniversary.

38. Flex contains the same five annuity payout options as the RAVA Advantage Contract. Annuity payouts are available on a fixed or variable basis, or a combination of both.

39. Under Flex, IDS Life assesses a CDSC against partial or full surrenders in excess of the Free Withdrawal Amount. IDS Life applies a CDSC of 7% on each Purchase Payment. IDS Life deducts this CDSC if the Contract owner requests a surrender within six years of making that Purchase Payment. The Flex Contract provides for a waiver of the CDSC for amounts surrendered after the later of the annuitant's attaining age 65 or the tenth contract anniversary. Additionally, IDS Life does not assess a CDSC on contract earnings; required minimum distributions (for those amounts required to be distributed from the Flex Contract); death benefits; or if payments are made under any annuity payout option.

40. During the life of the Flex Contract, IDS Life deducts an M&E charge at an annual rate of 1% of the average daily variable account value. IDS Life deducts a charge for administrative expenses at the end of each contract quarter from the contract value of the Flex Contract. The quarterly contract administrative charge is $6 (which equals an annual charge of $24 per contract year).

41. IDS Life deducts premium taxes of up to 3.5%, if applicable. Currently, IDS Life deducts any applicable premium tax when annuity payouts begin. However, IDS Life reserves the right to deduct this tax at other times such as when Purchase Payments are made or when the Contract is surrendered.

42. Assets invested in the Investment Funds are charged with the annual operating expenses of those Funds.

43. EBA is registered under the 1933 Act (File No. 33–52518). IDS Life no longer offers EBA Contracts. EBA was issued only as a group TSA. EBA was purchased (i) with a minimum initial Purchase Payment of $1,000; or (ii) in minimum installments of $25 per month or $300 annually under a scheduled payment plan. An owner may make additional Purchase Payments, which require a $50 minimum (unless Purchase Payments are made by installments under a scheduled payment plan), subsequent to the initial Purchase Payment. Maximum limitations on Purchase Payments are imposed for the first year, depending on the age of the Contract owner, and for each subsequent year.

44. Owners of EBA Contracts may allocate their Purchase Payments among the 14 Old Accounts that invest in 14 corresponding Investment Funds (all of which currently are available under RAVA Advantage). IDS Life, at a later date, may determine to create additional Accounts to invest in any additional Investment Funds as may now or in the future be available. EBA also offers a fixed account investment option with a guaranteed interest rate of 4% on an annual basis.

45. Owners of EBA Contracts may transfer contract values among the Old Accounts without charge. Transfers to and from the fixed account are permitted, subject to certain restrictions described in the prospectus for the EBA Contracts.

46. Subject to certain restrictions imposed by the Internal Revenue Code, the owner of an EBA Contract can access certificate values at any time before annuity payouts begin by means of partial surrenders or a full surrender.

47. The EBA Contract death benefit provision states that, upon the owner/annuitant's death before annuity payouts begin and while the Contract is in force, IDS Life will pay the following death benefits to the designated beneficiary: (i) if death occurs before the annuitant's 75th birthday, the beneficiary receives the greatest of (a) the certificate value; or (b) Purchase Payments, minus any surrenders; or (ii) if death occurs on or after the annuitant's 75th birthday, the beneficiary receives the certificate value.

48. EBA contains the same five annuity payout options as the RAVA Advantage Contract. Annuity payouts are available on a fixed or variable basis, or a combination of both.

49. Under EBA, IDS Life assess a CDSC against partial or full surrenders. The CDSC applies to surrenders in the first eleven certificate years. IDS Life assesses a CDSC as a percentage of the amount surrendered. The CDSC ranges from 8% in the first certificate year to 0% after 11 certificate years. The CDSC is further limited so that it will never exceed 8.5% of aggregate Purchase Payments made to the Contract. The EBA Contract provides for a waiver of the CDSC for amounts surrendered due to the owner's retirement under the TSA plan on or after age 55. Additionally, IDS Life does not assess a CDSC on required minimum distributions (for those amounts required to be distributed from the EBA Contract); amounts refunded during the free look period; death benefits; or if payments are made under any annuity payout option.

50. During the life of the EBA Contract, IDS Life deducts an M&E charge at an annual rate of 1% of the average daily variable account value. IDS Life deducts a charge for administrative expenses at the end of each certificate year from the certificate value of the EBA Contract. The annual administrative charge is $30 per certificate year.

51. IDS Life deducts premium taxes of up to 3.5%, if applicable. Currently, IDS Life deducts any applicable premium tax when annuity payouts begin. However, IDS Life reserves the right to deduct this tax at other times such as when Purchase Payments are made or when the Contract is surrendered.

52. Assets invested in the Investment Funds are charged with the annual operating expenses of those Funds.

53. Applicants represent that the features and benefits of RAVA Advantage will be no less favorable than under the Old Contracts, with some exceptions for differences in the guaranteed interest rate under the fixed account investment option, lower annuity settlement rates and lower initial death benefits. Applicants also represent that, with some exceptions for the CDSC, the charge for administrative expenses and optional charges for optional death benefits, the fees and charges of the RAVA Advantage Contract will be no higher than those of the Old Contracts.

Terms of the Exchange Offer

54. Applicants propose to offer eligible owners of Old Contracts the opportunity to exchange their Old Contracts for RAVA Advantage by means of the Exchange Offer. Partial exchanges will not be permitted.

55. Initially, to be eligible for the Exchange Offer, an Old Contract owner must meet all of the following criteria: (i) Have completed ten or more contract or certificate years under the Old Contract; (ii) have not made Purchase Payments greater than $2,000 in any tax year under the Old Contract in the 36 months prior to accepting the Exchange Offer (except for installment payments made under a scheduled payment plan); (iii) have a contract or certificate value (''Exchange Value'') (plus any additional transfers or rollovers) that is at least equal to $100,000; (iv) have a remaining CDSC of 2% or less of the contract or certificate value of the Old Contract; and (v) own a qualified annuity Contract. IDS Life reserves the right to extend the Exchange Offer to owners of Contracts who have completed less than ten contract or certificate years under the Old Contract, to owners of nonqualified annuity Contracts and to owners of Old Contracts with Exchange Values of less than $100,000.

56. Due to market volatility, the Exchange Value (plus any additional transfers or rollovers for qualified

annuity Contracts, or any additional Purchase Payments or exchanges for nonqualified annuity Contracts, individually and collectively the ''Additional Amounts'') may drop below the $100,000 eligible value between the time the internal exchange form and application are completed and mailed and the time they are received by IDS Life. If the Exchange Value (plus any Additional Amounts) does not drop more than 5% below the $100,000 eligible value, the Old Contract owner would still be eligible to participate in the Exchange Offer. If the Exchange Value (plus any Additional Amounts) drops more than 5% below the $100,000 eligible value, the Old Contract owner will not be eligible to participate in the Exchange Offer at that time. However, the internal exchange form and application can be resubmitted at a later date when the Exchange Value of the Old Contract (plus any Additional Amounts) meets the eligibility requirements.

57. Under RAVA Advantage, if the initial Purchase Payment is at least $100,000, IDS Life will allocate a Purchase Payment Credit equal to 1% of the initial purchase payment and 1% of each subsequent Purchase Payment received. Due to market volatility, the Exchange Value (plus any Additional Amounts) may drop below this $100,000 initial Purchase Payment amount. To increase the likelihood of remaining eligible to receive the 1% Purchase Payment Credit, the Old Contract owner could transfer that contract or certificate value allocated to the Old Accounts to the Old Account investing in the AXP VP Cash Management Fund while the exchange is pending to help reduce the risk of market volatility. The Old Contract owner then would be eligible for the Purchase Payment Credit of 1% of each Purchase Payment received based on an initial Purchase Payment of $100,000. IDS Life also would allocate a Purchase Payment Credit of 1% of each Purchase Payment received if the owner elects the ten-year CDSC period.

58. If, due to market volatility, the initial Purchase Payment into RAVA Advantage drops below $100,000, IDS Life will provide, from its general account assets, a 1% Exchange Credit based on the Purchase Payment applied to RAVA Advantage on that day the exchange is effected (''Exchange Date''). This 1% Exchange Credit will not apply to subsequent Purchase Payments into RAVA Advantage. IDS would still allocate a Purchase Payment Credit of 1% of each Purchase Payment received if the owner elects the ten-year CDSC period.

59. IDS Life also reserves the right to extend the Exchange Offer to owners of Old Contracts with Exchange Values of less than $100,000. IDS Life will provide, from its general account assets, a 1% Exchange Credit based on the Exchange Value of the Old Contract. This 1% Exchange Credit will not apply to subsequent Purchase Payments into RAVA Advantage. IDS Life would still allocate a Purchase Payment Credit of 1% of each Purchase Payment received if the owner elects the ten-year CDSC period.

60. Upon the owner's acceptance of the Exchange Offer, IDS Life will issue a RAVA Advantage Contract with all applicable Purchase Payment Credits and Exchange Credits. No CDSC will be deducted upon the surrender of an Old Contract in connection with the exchange. The Exchange Value of each Old Contract, together with any applicable Additional Amounts, Purchase Payment Credits and Exchange Credits, will be applied to the new RAVA Advantage Contract as of the Exchange Date. The Exchange Date will be the contract date of the new RAVA Advantage Contract for purposes of determining contract years and anniversaries after the Exchange Date.

61. If the owner of the new RAVA Advantage Contract exercises the free-look option, IDS Life will recapture any Purchase Payment Credits and Exchange Credits. IDS Life will reverse either the RAVA Advantage contract value (less any Purchase payment Credits and Exchange Credits) or the Purchase Payment made to the RAVA Advantage Contract, depending on applicable law. IDS Life will apply this amount to restore the Old Contract to the extent possible. IDS Life will allocate this amount to the selected Old Contract investments in the proportions that existed just prior to the exchange. Any adjustments made due to investment experience will be allocated or deducted according to the selected investment percentage allocations under the Old Contract just prior to the exchange. Withdrawals made after the free look period under RAVA Advantage has expired will be governed by the terms of the RAVA Advantage Contract, including the application of the CDSC. To the extent a death benefit or surrender payment includes any Purchase Payment Credit and Exchange Credit amounts: (i) applied within twelve months preceding the date of death that results in a lump sum death benefit under RAVA Advantage; or (ii) applied within twelve months preceding a request for a CDSC waiver due to nursing home confinement, IDS Life will recapture the Purchase Payment Credits and Exchange Credits.

62. IDS Life will notify all owners of the Old Contracts of the Exchange Offer through normal client communications such as updated prospectuses or prospectus supplements (''Program Announcement''). This Program Announcement: (i) Will describe the terms and conditions of the Exchange Offer; (ii) suggest to owners who may qualify that they contact their registered representatives to learn more about the Exchange Offer and to discuss their individual situations (including tax, financial planning and Contract considerations); and (iii) notify owners that IDS Life reserves the right to cancel the Exchange Offer at any time. In addition, IDS Life may send the information in the Program Announcement to some or all Old Contract owners via additional communications that also may include that owner's specific Contract information (such as Exchange Value and applicable CDSC).

63. IDS Life, either directly or through its registered representatives, will provide eligible Old Contract owners who are interested in learning more about the Exchange Offer with an Offering Communication that includes information outlined in the Program Announcement and additional information describing the Exchange Offer. The Offering Communication will state, in clear and plain English, that the Exchange Offer is not designed for a Contract owner who: (i) intends to hold the RAVA Advantage Contract as a short-term investment vehicle; or (ii) anticipates surrendering all or part (*i.e.* more than the 10% Free Withdrawal Amount on an annual basis) of his or her RAVA Advantage Contract before five to seven years (if the Old Contract owner would choose the seven-year CDSC period under RAVA Advantage) or eight to ten years (if the Old Contract owner would choose the ten-year CDSC period under RAVA Advantage). IDS Life will encourage Old Contract owners to carefully evaluate their personal financial planning situation when deciding whether to accept or reject the Exchange Offer.

64. In addition, the Offering Communication will explain how the owner of an Old Contract contemplating an exchange may avoid the applicable CDSC on the RAVA Advantage Contract by not surrendering more than the annual Free Withdrawal Amount and by holding any subsequent Purchase Payments until expiration of the CDSC period. In this regard, IDS Life will state, in clear and plain English, that if the owner surrenders the RAVA

Advantage Contract during the initial CDSC period: (i) the lower M&E charges and any applicable Purchase Payment Credits and Exchange Credits may be more than offset by the CDSC; and (ii) an Old Contract owner may be worse off than if he or she had rejected the Exchange Offer.

65. Furthermore, IDS Life will state, in clear and plain English, that guaranteed annuity settlement rates generally are lower under RAVA Advantage. Therefore, if the Old Contract owner contemplates annuitizing the RAVA Advantage Contract during the first few years, the lower settlement factors may more than offset the lower M&E charges and any applicable Purchase Payment Credits and Exchange Credits.

66. IDS Life will explain that due to market volatility, the Exchange Value (plus any Additional Amounts) may drop below $100,000 between the time the internal exchange form and application are completed and mailed and the time they are received by IDS Life. An Old Contract owner could transfer that contract or certificate value allocated to the Old Accounts to the Old Account investing in the AXP VP Cash Management Fund while the exchange is pending to help reduce the risk of market volatility and help preserve the $100,000 initial Purchase Payment into RAVA Advantage. In that case, the Old Contract owner would be eligible for the Purchase Payment Credit of 1% of each Purchase Payment received based on an initial Purchase Payment of $100,000. If, due to market volatility, the initial Purchase Payment into RAVA is less than $100,000, IDS Life will provide a 1% Exchange Credit based on the Purchase Payment applied to RAVA Advantage on the Exchange Date. Similarly, if IDS Life extends the Exchange Offer to owners of Old Contracts with Exchange Values of less than $100,000, IDS Life will explain in the Offering Communication that it will provide a 1% Exchange Credit based on the Exchange Value of the Old Contract. The 1% Exchange Credit will not apply to subsequent Purchase Payments. IDS Life will allocate a Purchase Payment Credit of 1% of each Purchase Payment received if the owner elects the ten-year CDSC period.

67. In addition, IDS Life will prominently disclose that the guaranteed interest rate on RAVA Advantage's fixed account investment option may be less than the guaranteed interest rate on the Old Contract's fixed account investment option. IDS Life also will disclose that the current death benefit on the Old Contract may be greater than the initial death benefit on RAVA Advantage. When applicable, IDS Life also will explain that owners of Old Contracts may lose some tax benefits. Finally, the Offering Communication will state that IDS Life may terminate the Exchange Offer at any time. The Offering Communication also will include a prospectus for the new RAVA Advantage Contract.

68. To accept the Exchange Offer, the owner of an Old Contract must complete an internal exchange form and application for the RAVA Advantage Contract. Applicants state that those Old Contract owners who accept the Exchange Offer will incur no current taxes and that the exchanges will constitute tax-free transfers, rollovers or exchanges pursuant to section 1035 of the Internal Revenue Code.

69. The Exchange Offer is meant to encourage existing Old Contract owners to remain with IDS Life rather than surrender their Contracts in exchange for a competitor's product. If the CDSC under RAVA Advantage did not apply to the Exchange Value, Applicants assert that IDS Life would have no assurance that an Old Contract owner who accepted the Exchange Offer would persist long enough for any applicable Purchase Payment Credits, Exchange Credits, payments to registered representatives and other relevant expenses to be recouped through standard fees from the ongoing operation of the RAVA Advantage Contract.

70. Applicants state that the commissions that IDS Life will pay its registered representatives for soliciting exchanges under the Exchange Offer are less than the normal commissions paid for soliciting sales of RAVA Advantage Contracts. Applicants assert that compensating IDS Life's registered representatives for these exchanges is necessary in order to provide sufficient incentive for them to compete with competitors' registered representatives.

71. IDS Life reserves the right to terminate the Exchange Offer at any time. If IDS Life terminates the Exchange Offer, it will send a notice to currently-eligible Old Contract owners (''Termination Notice''). The Termination Notice will state that Old Contract owners who wish to participate in the Exchange Offer must do so within two months from the date of the Termination Notice. The Termination Notice will contain all of the caveats described herein.

Applicants' Conditions

Applicants agree to the following conditions:

1. The Offering Communication and Termination Notice will contain concise, plain English statements that: (i) The Exchange Offer is suitable only for an Old Contract owner who expects to hold RAVA Advantage as a long-term investment; (ii) if the RAVA Advantage Contract is surrendered during the initial CDSC period or annuitized during the first few years, the lower M&E charges and any applicable Purchase Payment Credits and Exchange Credits may be more than offset by the CDSC or lower annuity settlement rates and an Old Contract owner may be worse off than if he or she had rejected the Exchange Offer; (iii) IDS Life will allocate an Exchange Credit of 1% on the initial Purchase Payment applied (but not on subsequent Purchase Payments received) if the initial Purchase Payment to the RAVA Advantage Contract is less than $100,000; (iv) the guaranteed interest rate on RAVA Advantage's fixed account option may be less than the guaranteed interest rate on the Old Contract's fixed account option; (v) the current death benefit on the Old Contract may be greater than the initial death benefit on RAVA Advantage; (vi) an Old Contract owner may lose some tax benefits (when applicable); and (vii) IDS Life reserves the right to terminate the Exchange Offer.

2. The Offering Communication will disclose in concise, plain English each aspect of the RAVA Advantage Contracts that could be less favorable than the Old Contracts.

3. IDS Life, either directly or through its registered representatives, will send an Offering Communication to eligible Old Contract owners who are interested in learning more about the Exchange Offer. An Old Contract owner choosing to exchange will then complete and sign an internal exchange form and RAVA Advantage application and return it to IDS Life. This internal exchange form will prominently restate in concise, plain English the caveats described above in Condition (1). If the internal exchange form is more than two pages long, IDS Life will use a separate document to obtain Contract owner acknowledgment of the caveats described in Condition (1).

4. IDS Life will maintain the following separately identifiable records in an easily accessible place for the time periods specified below in this Condition (4) for review by the Commission upon request: (i) Records showing the level of exchange activity and how it relates to the total number of Old Contract owners eligible to exchange (quarterly as a percentage of the number eligible); (ii) copies of any form of Program Announcements, Offering Communications, Termination

Notices and other written materials or scripts for presentations by registered representatives regarding the Exchange Offer that IDS Life either prepares or approves, including the dates that such materials were used; (iii) records containing information about each exchange transaction that occurs, including the name of the Contract owner, Old Contract and RAVA Advantage Contract numbers; the amount of CDSC waived on surrender of the Old Contract; Purchase Payment Credits and Exchange Credits paid; the name and CRD number of the registered representative soliciting the exchange, firm affiliation, branch office sales address, telephone number and the name of the registered representative's broker-dealer; commission paid; the internal exchange form (and separate document, if any, used to obtain the Old Contract owner's acknowledgement of the caveats required in Condition (1)) showing the name, date of birth, address and telephone number of the Contract owner and the date the internal exchange form (or separate document) was signed; amount of contract or certificate value exchanged, and persistency information relating to the RAVA Advantage Contract, including the date of any subsequent surrender and the amount of CDSC paid on the surrender; and (iv) logs showing a record of any Contract owner complaint about the exchange, state insurance department inquiries about the exchange, or litigation, arbitration, or other proceeding regarding any exchange. The logs will include the date of the complaint or commencement of the proceeding, name and address of the person making the complaint or commencing the proceeding, nature of the complaint or proceeding, and the persons named or involved in the complaint or proceeding. Applicants will retain records specified in (i) and (iv) for a period of six years after the date the records are created, records specified in (ii) for a period of six years after the date of last use, and records specified in (iii) for a period of two years after the date that the initial CDSC period of the RAVA Advantage Contract ends.

Applicants' Legal Analysis

1. Section 11(a) of the Act makes it unlawful for any registered open-end company, or any principal underwriter for such a company, to make or cause to be made an offer to the holder of a security of such company, or of any other open-end investment company, to exchange his or her security for a security in the same or another such company on any basis other than the relative net asset values of the respective securities, unless the terms of the offer have first been submitted to and approved by the Commission or are in accordance with Commission rules adopted under Section 11.

2. Section 11(c) of the Act, in pertinent part, requires, in effect, that any offer of exchange of the securities of a registered unit investment trust for the securities of any other investment company be approved by the Commission or satisfy applicable rules adopted under Section 11, regardless of the basis of the exchange.

3. The purpose of section 11 of the Act is to prevent ''switching,'' the practice of inducing security holders of one investment company to exchange their securities for those of a different investment company solely for the purpose of exacting additional selling charges. That type of practice was found by Congress to be widespread in the 1930s prior to the adoption of the Act.

4. Section 11(c) of the Act requires Commission approval (by order or by rule) of any exchange, regardless of its basis, involving securities issued by a unit investment trust, because investors in unit investment trusts were found by Congress to be particularly vulnerable to switching operations.

5. Applicants assert that the potential for harm to investors perceived in switching was its use to extract additional sales charges from those investors. Applicants further assert that the terms of the proposed Exchange Offer do not present the abuses against which Section 11 was intended to protect. The Exchange Offer was designed to allow IDS Life to compete on a level playing field with its competitors who are making bonus offers to its current Old Contract owners. No additional sales load or other fee will be imposed at the time of exercise of the Exchange Offer.

6. Rule 11a–2, by its express terms, provides Commission approval of certain types of offers of exchange of one variable annuity contract for another. Applicants assert that other than the relative net asset value requirement (which is not satisfied because exchanging Old Contract owners could potentially be given Purchase Payment Credits and Exchange Credits), the only part of Rule 11a–2 that would not be satisfied by the proposed Exchange Offer is the requirement that payments under the Old Contract be treated as if they had been made under the new RAVA Advantage Contract on the dates actually made. This provision of Rule 11a–2 is often referred to as a ''tacking'' requirement because it has the effect of ''tacking together'' the CDSC expiration periods of the exchanged and acquired contracts.

7. Applicants assert that the absence of tacking does not mean that an exchange offer cannot be attractive and beneficial to investors. Applicants state that the proposed Exchange Offer would assure an immediate and enduring economic benefit to investors for the following reasons: (i) RAVA Advantage has a lower M&E charge than the Old Contracts; (ii) RAVA Advantage Contract owners receive applicable Purchase Payment Credits and Exchange Credits; (iii) RAVA Advantage has more Investment Funds, giving RAVA Advantage owners the opportunity for greater diversification and asset allocation; and (iv) RAVA Advantage offers optional Enhanced Death Benefits, for an additional cost, that may provide substantive value to beneficiaries. Applicants assert that an owner who expects to hold RAVA Advantage as a long-term investment will receive the economic benefits of the Exchange Offer. No sales charge will ever be paid on the amounts exchanged unless the RAVA Advantage Contract is surrendered before expiration of the CDSC period that owner has chosen.

8. Applicants assert that tacking should be viewed as a useful way to avoid the need to scrutinize the terms of an offer of exchange to make sure that there is no abuse. Tacking is not a requirement of Section 11. Rather, it is a creation of a rule designed to approve the terms of offers of exchange ''sight unseen.'' Tacking focuses on the closest thing to multiple deduction of sales loads that is possible in a CDSC context—multiple exposure to sales loads upon surrender or redemption. If tacking and other safeguards of Rule 11a–2 are present, there is no need for the Commission or its staff to evaluate the terms of the offer. The absence of tacking in this fully scrutinized Section 11 application will have no impact on offers made pursuant to the rule on a ''sight unseen'' basis.

9. Applicants assert that the terms of the Exchange Offer are better than those of IDS Life's competitors. Unlike the Exchange Offer, when Old Contract owners exchange into competitors' contracts, they must pay any remaining CDSC on the Old Contracts at the time of the exchange. No tacking is required when IDS Life's competitors offer their variable annuity contracts to owners of Old Contracts or when IDS Life makes such an offer to competitors' contract owners.

10. To the extent there are differences in the Contracts, those differences relate to enhanced contractual features and charges that are fully described in the

prospectus for the RAVA Advantage Contract. Furthermore, the Offering Communication (and any Termination Notice) will contain concise, plain English statements that: (i) The Exchange Offer is suitable only for an Old Contract owner who expects to hold RAVA Advantage as a long-term investment; (ii) if the RAVA Advantage Contract is surrendered during the initial CDSC period or annuitized during the first few years, the lower M&E charges and any applicable Purchase Payment Credits and Exchange Credits may be more than offset by the CDSC or lower annuity settlement rates and an Old Contract owner may be worse off than if he or she had rejected the Exchange Offer; (iii) IDS Life will allocate an Exchange Credit of 1% on the initial Purchase Payment applied (but not on subsequent Purchase Payments received) if the initial Purchase Payment to the RAVA Advantage Contract is less than $100,000; (iv) the guaranteed interest rate on RAVA Advantage's fixed account option may be less than the guaranteed interest rate on the Old Contract's fixed account option; (v) the current death benefit on the Old Contract may be greater than the initial death benefit on RAVA Advantage; (vi) an Old Contract owner may lose some tax benefits (when applicable); and (vii) IDS Life reserves the right to terminate the Exchange Offer. Applicants assert that Contract owners should have the opportunity to decide, on the basis of full and fair disclosure, whether the enhancements of the RAVA Advantage Contract justify accepting the offer.

Conclusion

Applicants submit, for the reasons stated herein, that the Exchange Offer is consistent with the protections provided by Section 11 of the Act, and that approval of the Exchange Offer is necessary or appropriate in the public interest and consistent with the protection of investors and the purposes fairly intended by the policies and provisions of the Act. Applicants submit that the requested order approving the terms of the proposed Exchange Offer therefore should be granted.

For the Commission, by the Division of Investment Management, pursuant to delegated authority.

Margaret H. McFarland,

Deputy Secretary.

[FR Doc. 02–4054 Filed 2–19–02; 8:45 am]

BILLING CODE 8010–01–P

SECURITIES AND EXCHANGE COMMISSION

[Release No. IC–25421; 812–12760]

DFA Investment Dimensions Group Inc., et al.

February 13, 2002.

AGENCY: Securities and Exchange Commission (''SEC'' or the ''Commission'').

ACTION: Notice of Application for Exemption under Section 6(c) of the Investment Company Act of 1940, as amended (the ''1940 Act''), for an exemption from the provisions of Sections 9(a), 13(a), 15(a) and 15(b) of the 1940 Act, and Rules 6e–2(b)(15) and 6e–3(T)(b)(15), thereunder.

APPLICANTS: DFA Investment Dimensions Group Inc. (the ''Fund'') and Dimensional Fund Advisors, Inc. (''DFA'') (the Fund together with DFA, are the ''Applicants'').

SUMMARY OF APPLICATION: Applicants and certain life insurance companies and their separate accounts that currently invest or may hereafter invest in the Fund (and, to the extent necessary, any investment adviser, principal underwriter and depositor of such an account) seek exemptive relief from the provisions of Sections 9(a), 13(a), 15(a) and 15(b) of the 1940 Act, and Rules 6e–2(b)(15) and 6e–3(T)(b)(15) thereunder, to the extent necessary to permit shares of the Fund and shares of any other investment company or portfolio that is designed to fund insurance products and for which DFA or any of its affiliates may serve in the future as investment adviser, manager, principal underwriter, sponsor, or administrator (''Future Funds'') (the Fund, together with Future Funds, are the ''Funds'') to be sold to and held by: (i) separate accounts funding variable annuity and variable life insurance contracts (collectively referred to herein as ''Variable Contracts'') issued by both affiliated and unaffiliated life insurance companies; (ii) qualified pension and retirement plans (''Qualified Plans'') outside of the separate account context; (iii) separate accounts that are not registered as investment companies under the 1940 Act pursuant to exemptions from registration under Section 3(c) of the 1940 Act; (iv) DFA or certain related corporations (collectively ''DFA''); and (v) any other person permitted to hold shares of the Funds pursuant to Treasury Regulation 1.817–5 (''General Accounts''), including the general account of any life insurance company whose separate account holds, or will hold, shares of the Funds or certain related corporations.

FILING DATES: The application was filed on January 18, 2002.

HEARING OR NOTIFICATION OF HEARING: An order granting the Application will be issued unless the SEC orders a hearing. Interested persons may request a hearing by writing to the SEC's Secretary and serving Applicants with a copy of the request, personally or by mail. Hearing requests should be received by the SEC by 5:30 p.m. on March 8, 2002, and should be accompanied by proof of service on Applicants, in the form of an affidavit or, for lawyers, a certificate of service. Hearing requests should state the nature of the writer's interest, the reason for the request, and the issues contested. Persons who wish to be notified of a hearing may request notification by writing to the Secretary of the SEC.

ADDRESSES: Secretary, SEC, 450 5th Street, NW., Washington, DC, 20549–0609. Applicants, c/o Stradley, Ronon, Stevens & Young, LLP, 2600 One Commerce Square, Philadelphia, PA 19103–7098, Attention: Mark A. Sheehan, Esq.

FOR FURTHER INFORMATION CONTACT: Patrick Scott, Attorney, or Lorna MacLeod, Branch Chief, Office of Insurance Products, Division of Investment Management, at (202) 942–0670.

SUPPLEMENTARY INFORMATION: The following is a summary of the Application. The complete Application is available for a fee from the SEC's Public Reference Branch, 450 Fifth Street, NW., Washington, DC 20549–0102 ((202) 942–8090).

Applicants' Representations

1. The Fund is registered with the Commission as an open-end management investment company and is organized as a Maryland corporation. DFA is registered with the Commission as an investment adviser under the Investment Advisers Act of 1940, as amended, and serves as the investment adviser to the Fund. The Fund currently consists of thirty-eight investment portfolios, including six investment portfolios that are sold only to separate accounts of insurance companies in conjunction with variable life and variable annuity contracts: VA Small Value Portfolio, VA Large Value Portfolio, VA International Value Portfolio, VA International Small Portfolio, VA Short-Term Fixed Portfolio and VA Global Bond Portfolio (each, a ''Portfolio,'' and collectively, the ''Portfolios''). The Fund or any Future Funds may offer one or more

additional investment portfolios in the future (also referred to as ''Portfolios'').

2. Shares of the Portfolios will be offered to separate accounts of affiliated and unaffiliated insurance companies (each, a ''Participating Insurance Company'') to serve as investment vehicles to fund Variable Contracts. These separate accounts either will be registered as investment companies under the 1940 Act or will be exempt from such registration pursuant to exemptions from registration under Section 3(c) of the 1940 Act (individually, a ''Separate Account'' and collectively, the ''Separate Accounts''). Shares of the Portfolios may also be offered to Qualified Plans, DFA or certain related corporations (collectively ''DFA''), and any other person permitted to hold shares of the Funds pursuant to Treasury Regulation 1.817–5 (''General Accounts''), including the general account of any life insurance company whose separate account holds, or will hold, shares of the Funds or certain related corporations.

3. The Participating Insurance Companies at the time of their investment in the Funds either have or will establish their own Separate Accounts and design their own Variable Contracts. Each Participating Insurance Company has or will have the legal obligation of satisfying all applicable requirements under both state and federal law. Each Participating Insurance Company, on behalf of its Separate Accounts, has or will enter into an agreement with the Funds concerning such Participating Insurance Company's participation in the Portfolios. The role of the Funds under this agreement, insofar as the federal securities laws are applicable, will consist of, among other things, offering shares of the Portfolios to the participating Separate Accounts and complying with any conditions that the Commission may impose upon granting the order requested herein.

4. On November 29, 1994, the Commission issued an order granting exemptive relief to permit shares of the Funds to be sold to and held by variable annuity and variable life insurance separate accounts of both affiliated and unaffiliated life insurance companies (Investment Company Act Release No. 20743, File No. 812–9154) (the ''Original Order''). The Original Order allows the Fund to offer its shares to insurance companies as the investment vehicle for their separate accounts supporting Variable Contracts. The Original Order does not include the Future Funds as parties, nor expressly address the sale of shares of the Funds or any Future Funds to Qualified Plans, unregistered separate accounts, DFA or General Accounts. Applicants propose that the Future Funds be added as parties to the Original Order and the Funds and any Future Funds be permitted to offer and sell their shares to Qualified Plans, unregistered separate accounts, DFA and the General Accounts.

Applicants' Legal Analysis

1. Applicants and certain life insurance companies and their Separate Accounts that currently invest or may hereafter invest in the Fund (and, to the extent necessary, any investment adviser, principal underwriter and depositor of such an account) seek exemptive relief from the provisions of Sections 9(a), 13(a), 15(a) and 15(b) of the 1940 Act, and Rules 6e–2(b)(15) and 6e–3(T)(b)(15) thereunder, to the extent necessary to permit shares of the Portfolios and shares of any Future Funds to be sold to and held by: (i) separate accounts funding Variable Contracts issued by both affiliated and unaffiliated life insurance companies; (ii) Qualified Plans outside of the separate account context; (iii) separate accounts that are not registered as investment companies under the 1940 Act pursuant to exemptions from registration under Section 3(c) of the 1940 Act; (iv) DFA or certain related corporations (collectively ''DFA''); and (v) any General Accounts, including the general account of any life insurance company whose separate account holds, or will hold, shares of the Funds or certain related corporations.

2. In connection with the funding of scheduled premium variable life insurance contracts issued through a separate account registered as a unit investment trust (''UIT'') under the 1940 Act, Rule 6e–2(b)(15) provides partial exemptions from Sections 9(a), 13(a), 15(a) and 15(b) of the 1940 Act. The relief provided by Rule 6e–2 is also granted to the investment adviser, principal underwriter, and depositor of the separate account. Section 9(a)(2) of the 1940 Act makes it unlawful for any company to serve as an investment adviser or principal underwriter of any UIT, if an affiliated person of that company is subject to a disqualification enumerated in Sections 9(a)(1) or (2) of the 1940 Act. Sections 13(a), 15(a) and 15(b) of the 1940 Act have been deemed by the Commission to require ''pass-through'' voting with respect to an underlying investment company's shares. Rule 6e–2(b)(15) provides these exemptions apply only where all of the assets of the UIT are shares of management investment companies ''which offer their shares exclusively to variable life insurance separate accounts of the life insurer or of any affiliated life insurance company.'' Therefore, the relief granted by Rule 6e–2(b)(15) is not available with respect to a scheduled premium life insurance separate account that owns shares of an underlying fund that also offers its shares to a variable annuity separate account or flexible premium variable life insurance separate account of the same company or any other affiliated insurance company. The use of a common management investment company as the underlying investment vehicle for both variable annuity and variable life insurance separate accounts of the same life insurance company or of any affiliated life insurance company is referred to herein as ''mixed funding.''

3. The relief granted by Rule 6e–2(b)(15) also is not available with respect to a scheduled premium variable life insurance separate account that owns shares of an underlying fund that also offers its shares to separate accounts funding Variable Contracts of one or more unaffiliated life insurance companies. The use of a common management investment company as the underlying investment vehicle for variable annuity and/or variable life insurance separate accounts of unaffiliated life insurance companies is referred to herein as ''shared funding.''

4. The relief under Rule 6e–2(b)(15) is available only where shares are offered exclusively to variable life insurance separate accounts of a life insurer or any affiliated life insurance company, additional exemptive relief is necessary if the shares of the Portfolios are also to be sold to Qualified Plans or other eligible holders of shares, as described above. Applicants note that if shares of the Portfolios are sold only to Qualified Plans, exemptive relief under Rule 6e–2 would not be necessary. The relief provided for under this section does not relate to Qualified Plans or to a registered investment company's ability to sell its shares to Qualified Plans. The use of a common management investment company as the underlying investment vehicle for variable annuity and variable life separate accounts of affiliated and unaffiliated insurance companies, and for Qualified Plans, is referred to herein as ''extended mixed and shared funding.''

5. In connection with flexible premium variable life insurance contracts issued through a separate account registered under the 1940 Act as a UIT, Rule 6e–3(T)(b)(15) provides partial exemptions from Sections 9(a), 13(a), 15(a) and 15(b) of the 1940 Act. The exemptions granted by Rule 6e–

3(T)(b)(15) are available only where all the assets of the separate account consist of the shares of one or more registered management investment companies that offer to sell their shares ''exclusively to separate accounts of the life insurer, or of any affiliated life insurance companies, offering either scheduled contracts or flexible contracts, or both; or which also offer their shares to variable annuity separate accounts of the life insurer or of an affiliated life insurance company or which offer their shares to any such life insurance company in consideration solely for advances made by the life insurer in connection with the operation of the separate account.'' Therefore, Rule 6e–3(T)(b)(15) permits mixed funding but does not permit shared funding. The exemptions are also granted to the investment adviser, principal underwriter and depositor of the separate account.

6. The relief under Rule 6e–3(T) is available only where shares are offered exclusively to variable life insurance separate accounts of a life insurer or any affiliated life insurance company, and additional exemptive relief is necessary if the shares of the Portfolios are also to be sold to Qualified Plans or other eligible holders of shares as described above. Applicants note that if shares of the Portfolios were sold only to Qualified Plans, exemptive relief under Rule 6e–3(T)(b)(15) would not be necessary. The relief provided for under this section does not relate to Qualified Plans or to a registered investment company's ability to sell its shares to Qualified Plans.

7. Applicants maintain, as discussed below, that there is no policy reason for the sale of the Portfolios' shares to Qualified Plans, to DFA, or General Accounts to result in a prohibition against, or otherwise limit, a Participating Insurance Company from relying on the relief provided by Rules 6e–2(b)(15) and 6e–3(T)(b)(15). However, because the relief under Rules 6e–2(b)(15) and 6e–3(T)(b)(15) is available only when shares are offered exclusively to separate accounts, additional exemptive relief may be necessary if the shares of the Portfolios are also to be sold to Qualified Plans, DFA or General Accounts. Applicants therefore request relief in order to have the participating insurance companies enjoy the benefits of the relief granted in Rules 6e–2(b)(15) and 6e–3(T)(b)(15). Applicants note that if the Portfolios' shares were to be sold only to Qualified Plans, DFA, General Accounts and/or separate accounts funding variable annuity contracts, exemptive relief under Rule 6e–2 and Rule 6e–3(T) would be unnecessary. The relief provided for under Rules 6e–2(b)(15) and 6e–3(T)(b)(15) does not relate to Qualified Plans, DFA, or General Accounts, or to a registered investment company's ability to sell its shares to such purchasers.

8. Applicants also note that the promulgation of Rules 6e–2(b)(15) and 6e–3(T)(b)(15) preceded the issuance of the regulations issued by the Treasury Department (''Regulations'') that made it possible for shares of an investment company portfolio to be held by the trustee of a Qualified Plan without adversely affecting the ability of shares in the same investment company portfolio also to be held by the separate accounts of insurance companies in connection with their Variable Contracts. Thus, the sale of shares of the same portfolio to both separate accounts and Qualified Plans was not contemplated at the time of the adoption of Rules 6e–2(b)(15) and 6e–3(T)(b)(15).

9. Consistent with the Commission's authority under Section 6(c) of the 1940 Act to grant exemptive orders to a class or classes of persons and transactions, this Application requests relief for the class consisting of insurers and Separate Accounts that will invest in the Portfolios, and to the extent necessary, Qualified Plans, other eligible holders of shares and investment advisers, principal underwriters and depositors of such accounts.

10. Section 9(a)(3) of the 1940 Act provides that it is unlawful for any company to serve as investment adviser or principal underwriter of any registered open-end investment company if an affiliated person of that company is subject to a disqualification enumerated in Sections 9(a)(1) or (2). Rules 6e–2(b)(15)(i) and (ii) and Rules 6e–3(T)(b)(15)(i) and (ii) under the 1940 Act provide exemptions from Section 9(a) under certain circumstances, subject to the limitations discussed above on mixed and shared funding. These exemptions limit the application of the eligibility restrictions to affiliated individuals or companies that directly participate in management of the underlying management company.

11. The partial relief granted in Rules 6e–2(b)(15) and 6e–3(T)(b)(15) under the 1940 Act from the requirements of Section 9 of the 1940 Act, in effect, limits the amount of monitoring necessary to ensure compliance with Section 9 to that which is appropriate in light of the policy and purposes of Section 9. Those 1940 Act rules recognize that it is not necessary for the protection of investors or the purposes fairly intended by the policy and provisions of the 1940 Act to apply the provisions of Section 9(a) to individuals in a large insurance company complex, most of whom will have no involvement in matters pertaining to investment companies in that organization. The Participating Insurance Companies and Qualified Plans are not expected to play any role in the management of the Funds. Those individuals who participate in the management of the Funds will remain the same regardless of which Separate Accounts or Qualified Plans invests in the Funds. Applying the monitoring requirements of Section 9(a) of the 1940 Act because of investment by separate accounts of other insurers or Qualified Plans would be unjustified and would not serve any regulatory purpose. Furthermore, the increased monitoring costs could reduce the net rates of return realized by contract owners.

12. Moreover, since the Qualified Plans, DFA and General Accounts are not themselves investment companies, and therefore are not subject to Section 9 of the 1940 Act and will not be deemed affiliates solely by virtue of their shareholdings, no additional relief is necessary.

13. Rules 6e–2(b)(15)(iii) and 6e–3(T)(b)(15)(iii) under the 1940 Act provide exemptions from the pass-through voting requirement with respect to several significant matters, assuming the limitations on mixed and shared funding are observed. Rules 6e–2(b)(15)(iii)(A) and 6e–3(T)(b)(15)(iii)(A) provide that the insurance company may disregard the voting instructions of its contract owners with respect to the investments of an underlying fund, or any contract between such a fund and its investment adviser, when required to do so by an insurance regulatory authority (subject to the provisions of paragraphs (b)(5)(i) and (b)(7)(ii)(A) of Rules 6e–2 and 6e–3(T), respectively, under the 1940 Act). Rules 6e–2(b)(15)(iii)(B) and 6e–3 (T)(b)(15)(iii)(A)(*2*) provide that the insurance company may disregard the voting instructions of its contract owners if the contract owners initiate any change in an underlying fund's investment policies, principal underwriter, or any investment adviser (provided that disregarding such voting instructions is reasonable and subject to the other provisions of paragraphs (b)(5)(ii), (b)(7)(ii)(B), and (b)(7)(ii)(C), respectively, of Rules 6e–2 and 6e–3(T) under the 1940 Act).

14. Rule 6e–2 under the 1940 Act recognizes that a variable life insurance contract, as an insurance contract, has important elements unique to insurance contracts and is subject to extensive

state regulation of insurance. In adopting Rule 6e–2(b)(15)(iii), the Commission expressly recognized that state insurance regulators have authority, pursuant to state insurance laws or regulations, to disapprove or require changes in investment policies, investment advisers, or principal underwriters. The Commission also expressly recognized that state insurance regulators have authority to require an insurer to draw from its general account to cover costs imposed upon the insurer by a change approved by contract owners over the insurer's objection. The Commission, therefore, deemed such exemptions necessary ''to assure the solvency of the life insurer and performance of its contractual obligations by enabling an insurance regulatory authority or the life insurer to act when certain proposals reasonably could be expected to increase the risks undertaken by the life insurer.'' In this respect, Applicants state, flexible premium variable life insurance contracts are identical to scheduled premium variable life insurance contracts. Therefore, the corresponding provisions of Rule 6e–3(T) under the 1940 Act undoubtedly were adopted in recognition of the same factors.

15. Applicants state that the sale of Portfolio shares to Qualified Plans, DFA and General Accounts will not have any impact on the relief requested herein. With respect to the Qualified Plans, which are not registered as investment companies under the 1940 Act, there is no requirement to pass through voting rights to Qualified Plan participants. Indeed, to the contrary, applicable law expressly reserves voting rights associated with Qualified Plan assets to certain specified persons. Under Section 403(a) of the Employee Retirement Income Security Act, as amended (''ERISA''), shares of a portfolio of a fund sold to a Qualified Plan must be held by the trustees of the Qualified Plan. Section 403(a) also provides that the trustee(s) must have exclusive authority and discretion to manage and control the Qualified Plan with two exceptions: (i) when the Qualified Plan expressly provides that the trustee(s) are subject to the direction of a named fiduciary who is not a trustee, in which case the trustees are subject to proper directions made in accordance with the terms of the Qualified Plan and not contrary to ERISA, and (ii) when the authority to manage, acquire, or dispose of assets of the Qualified Plan is delegated to one or more investment managers pursuant to Section 402(c)(3) of ERISA. Unless one of the above two exceptions stated in Section 403(a) applies, Qualified Plan trustees have the exclusive authority and responsibility for voting proxies.

16. Where a named fiduciary to a Qualified Plan appoints an investment manager, the investment manager has the responsibility to vote the shares held unless the right to vote such shares is reserved to the trustees or the named fiduciary. The Qualified Plans may have their trustee(s) or other fiduciaries exercise voting rights attributable to investment securities held by the Qualified Plans in their discretion. Some of the Qualified Plans, however, may provide for the trustee(s), an investment adviser (or advisers), or another named fiduciary to exercise voting rights in accordance with instructions from participants. Similarly, DFA and General Accounts are not subject to any pass-through voting requirements. Accordingly, unlike the case with insurance company separate accounts, the issue of resolution of material irreconcilable conflicts with respect to voting is not present with Qualified Plans, DFA or General Accounts.

17. Where a Qualified Plan does not provide participants with the right to give voting instructions, the trustee or named fiduciary has responsibility to vote the shares held by the Qualified Plan. In this circumstance, the trustee has a fiduciary duty to vote the shares in the best interest of the Qualified Plan participants. Accordingly, even if DFA or an affiliate of DFA were to serve in the capacity of trustee or named fiduciary with voting responsibilities, DFA or the affiliates would have a fiduciary duty to vote those shares in the best interest of the Qualified Plan participants.

18. In addition, even if a Qualified Plan were to hold a controlling interest in a Portfolio, Applicants do not believe that such control would disadvantage other investors in such Portfolio to any greater extent than is the case when any institutional shareholder holds a majority of the voting securities of any open-end management investment company. In this regard, Applicants submit that investment in a Portfolio by a Qualified Plan will not create any of the voting complications occasioned by mixed funding or shared funding. Unlike mixed funding or shared funding, Qualified Plan investor voting rights cannot be frustrated by veto rights of insurers or state regulators.

19. Where a Qualified Plan provides participants with the right to give voting instructions, Applicants see no reason to believe that participants in Qualified Plans generally or those in a particular Qualified Plan, either as a single group or in combination with participants in other Qualified Plans, would vote in a manner that would disadvantage Variable Contract holders. Thus, Applicants submit, the purchase of shares of Portfolios by Qualified Plans that provide voting rights does not present any complications not otherwise occasioned by mixed or shared funding.

20. The prohibitions on mixed and shared funding might reflect concern regarding possible different investment motivations among investors. When Rule 6e–2 under the 1940 Act was adopted, variable annuity separate accounts could invest in mutual funds whose shares also were offered to the general public. Therefore, the Commission staff contemplated underlying funds with public shareholders, as well as with variable life insurance separate account shareholders. The Commission staff may have been concerned with the potentially different investment motivations of public shareholders and variable life insurance contract owners. There also may have been some concern with respect to the problems of permitting a state insurance regulatory authority to affect the operations of a publicly available mutual fund and to affect the investment decisions of public shareholders.

21. For reasons unrelated to the 1940 Act, however, Internal Revenue Service Revenue Ruling 81–225 (Sept. 25, 1981) effectively deprived variable annuities funded by publicly available mutual funds of their tax-benefited status. The Tax Reform Act of 1984 codified the prohibition against the use of publicly available mutual funds as an investment vehicle for Variable Contracts (including variable life contracts). Section 817(h) of the Internal Revenue Code of 1986, as amended (the ''Code''), in effect requires that the investments made by variable annuity and variable life insurance separate accounts be ''adequately diversified'' if a separate account is organized as a UIT that invests in a single fund or series, the diversification test will be applied at the underlying fund level, rather than at the separate account level, but only if ''all of the beneficial interests'' in the underlying fund ''are held by one or more insurance companies (or affiliated companies) in their general account or in segregated asset accounts * * *''. Accordingly, a UIT separate account that invests solely in a publicly available mutual fund will not be adequately diversified. In addition, any underlying mutual fund, including any Portfolio, that sells shares to separate accounts, in effect, would be precluded from also selling its shares to

the public. Consequently, there will be no public shareholders of any Portfolio.

22. Shared funding by unaffiliated insurance companies does not present any issues that do not already exist where a single insurance company is licensed to do business in several or all states. A particular state insurance regulatory body could require action that is inconsistent with the requirements of other states in which the insurance company offers its policies. The fact that different insurers may be domiciled in different states does not create a significantly different or enlarged problem.

23. Shared funding by unaffiliated insurers, in this respect, is no different than the use of the same investment company as the funding vehicle for affiliated insurers, which Rules 6e–2(b)(15) and 6e–3(T)(b)(15) under the 1940 Act permit. Affiliated insurers may be domiciled in different states and be subject to differing state law requirements. Affiliation does not reduce the potential, if any exists, for differences in state regulatory requirements. In any event, the conditions set forth below are designed to safeguard against, and provide procedures for resolving, any adverse effects that differences among state regulatory requirements may produce. If a particular state insurance regulator's decision conflicts with the majority of other state regulators, then the affected insurer will be required to withdraw its Separate Account's investment in the affected Fund. This requirement will be provided for in agreements that will be entered into by Participating Insurance Companies with respect to their participation in the relevant Portfolio.

24. Rules 6e–2(b)(15) and 6e–3(T)(b)(15) under the 1940 Act give the insurance company the right to disregard the voting instructions of the contract owners. This right does not raise any issues different from those raised by the authority of state insurance administrators over separate accounts. Under Rules 6e–2(b)(15) and 6e–3(T)(b)(15), an insurer can disregard contract owner voting instructions only with respect to certain specified items. Affiliation does not eliminate the potential, if any exists, for divergent judgments as to the advisability or legality of a change in investment policies, principal underwriter, or investment adviser initiated by contract owners. The potential for disagreement is limited by the requirements in Rules 6e–2 and 6e–3(T) under the 1940 Act that the insurance company's disregard of voting instructions be reasonable and based on specific good-faith determinations.

25. A particular insurer's disregard of voting instructions, nevertheless, could conflict with the majority of contract owners' voting instructions. The insurer's action possibly could be different than the determination of all or some of the other insurers (including affiliated insurers) that the voting instructions of contract owners should prevail, and either could preclude a majority vote approving the change or could represent a minority view. If the insurer's judgment represents a minority position or would preclude a majority vote, then the insurer may be required, at the affected Fund's election, to withdraw its Separate Account's investment in such Portfolio. No charge or penalty will be imposed as a result of such withdrawal. This requirement will be provided for in the agreements entered into with respect to participation by the Participating Insurance Companies in each Portfolio.

26. Each Portfolio will be managed to attempt to achieve the investment objective or objectives of such Portfolio, and not to favor or disfavor any particular Participating Insurance Company or type of insurance product. There is no reason to believe that different features of various types of contracts, including the ''minimum death benefit'' guarantee under certain variable life insurance contracts, will lead to different investment policies for different types of Variable Contracts. To the extent that the degree of risk may differ as between variable annuity contracts and variable life insurance policies, the different insurance charges imposed, in effect, adjust any such differences and equalize the insurers' exposure in either case.

27. Applicants do not believe that the sale of the shares of the Portfolios to Qualified Plans will increase the potential for material irreconcilable conflicts of interest between or among different types of investors. In particular, Applicants see very little potential for such conflicts beyond those which would otherwise exist between variable annuity and variable life insurance contract owners. Moreover, in considering the appropriateness of the requested relief, Applicants have analyzed the following issues to assure themselves that there were either no conflicts of interest or that there existed the ability by the affected parties to resolve the issues without harm to the contract owners in the Separate Accounts or to the participants under the Qualified Plans.

28. Applicants considered whether there are any issues raised under the Code, regulations issued by the Treasury Department (''Regulations''), or Internal Revenue Service Revenue Rulings thereunder, if Qualified Plans, variable annuity separate accounts, and variable life insurance separate accounts all invest in the same underlying fund. As noted above, Section 817(h) of the Code imposes certain diversification standards on the underlying assets of Variable Contracts held in an underlying mutual fund. The Code provides that a Variable Contract shall not be treated as an annuity contract or life insurance, as applicable, for any period (and any subsequent period) for which the investments are not, in accordance with regulations prescribed by the Treasury Department, adequately diversified.

29. Regulations issued under Section 817(h) of the Code provide that, in order to meet the statutory diversification requirements, all of the beneficial interests in the investment company must be held by the segregated asset accounts of one or more insurance companies. However, the Regulations contain certain exceptions to this requirement, one of which allows shares in an underlying mutual fund to be held by the trustees of a qualified pension or retirement plan without adversely affecting the ability of such shares also to be held by separate accounts of insurance companies in connection with their Variable Contracts. (Treas. Reg. 1.817–5(f)(3)(iii)) Thus, the Regulations specifically permit ''qualified pension or retirement plans'' and separate accounts to invest in the same underlying fund. For this reason, Applicants have concluded that neither the Code, nor Regulations, nor Internal Revenue Service Revenue Rulings thereunder, present any inherent conflicts of interest if the Qualified Plans and Separate Accounts all invest in the same Portfolio.

30. Applicants note that while there are differences in the manner in which distributions from Variable Contracts and Qualified Plans are taxed, these differences will have no impact on the Funds. When distributions are to be made, and a Separate Account or Qualified Plan is unable to net purchase payments to make the distributions, the Separate Account and Qualified Plan will redeem shares of the relevant Portfolio at their respective net asset value in conformity with Rule 22c–1 under the 1940 Act (without the imposition of any sales charge) to provide proceeds to meet distribution needs. A Participating Insurance Company then will make distributions in accordance with the terms of its Variable Contract, and a Qualified Plan then will make distributions in

accordance with the terms of the Qualified Plan.

31. Applicants state that, there is analogous precedent for a situation in which the same funding vehicle was used for contract owners subject to different tax rules, without any apparent conflicts. Prior to the Tax Reform Act of 1984, a number of insurance companies offered variable annuity contracts on both a qualified and non-qualified basis through the same separate account. Underlying reserves of both qualified and non-qualified contracts therefore were commingled in the same separate account. However, long-term capital gains incurred in such separate accounts were taxed on a different basis than short-term gains and other income with respect to the reserves underlying non-qualified contracts. A tax reserve at the estimated tax rate was established in the separate account affecting only the non-qualified reserves. To the best of Applicants' knowledge, that practice was never found to have violated any fiduciary standards. Accordingly, Applicants have concluded that the tax consequences of distributions with respect to Participating Insurance Companies and Qualified Plans do not raise any conflicts of interest with respect to the use of the Portfolios.

32. In connection with any meeting of shareholders, the soliciting Fund will inform each shareholder, including each Separate Account, Qualified Plan, DFA and General Account, of information necessary for the meeting, including their respective share of ownership in the relevant Portfolio. Each Participating Insurance Company then will solicit voting instructions in accordance with Rules 6e–2 and 6e–3(T), as applicable, and its agreement with the Funds concerning participation in the relevant Portfolio. Shares of a Portfolio that are held by DFA and any General Account will be voted in the same proportion as all variable contract owners having voting rights with respect to that Portfolio. However, DFA and any General Account will vote their shares in such other manner as the Commission may require. Shares held by Qualified Plans will be voted in accordance with applicable law. The voting rights provided to Qualified Plans with respect to shares of a Portfolio would be no different from the voting rights that are provided to Qualified Plans with respect to shares of funds sold to the general public. Furthermore, if a material irreconcilable conflict arises because of a Qualified Plan's decision to disregard Qualified Plan participant voting instructions, if applicable, and that decision represents a minority position or would preclude a majority vote, the Qualified Plan may be required, at the election of the affected Fund, to withdraw its investment in such Portfolio, and no charge or penalty will be imposed as a result of such withdrawal.

33. Applicants reviewed whether a ''senior security,'' as such term is defined under Section 18(g) of the 1940 Act, is created with respect to any Variable Contract owner as opposed to a participant under a Qualified Plan, DFA or a General Account. Applicants concluded that the ability of the Funds to sell shares of their Portfolios directly to Qualified Plans, DFA or a General Account does not create a senior security. ''Senior security'' is defined under Section 18(g) of the 1940 Act to include ''any stock of a class having priority over any other class as to distribution of assets or payment of dividends.'' As noted above, regardless of the rights and benefits of participants under Qualified Plans, or contract owners under Variable Contracts, the Qualified Plans, DFA, General Accounts and the Separate Accounts only have rights with respect to their respective shares of the Portfolio. They only can redeem such shares at net asset value. No shareholder of a Portfolio has any preference over any other shareholder with respect to distribution of assets or payment of dividends.

Applicants' Conditions

Applicants agree that the order granting the requested relief shall be subject to the following conditions:

1. A majority of the Board of Directors (the ''Board'') of the Fund will consist of persons who are not ''interested persons'' of the Fund, as defined by Section 2(a)(19) of the 1940 Act, and the rules thereunder, and as modified by any applicable orders of the Commission, except that if this condition is not met by reason of the death, disqualification, or bona-fide resignation of any Director or Directors, then the operation of this condition will be suspended: (i) for a period of 45 days if the vacancy or vacancies may be filled by the Board; (ii) for a period of 60 days if a vote of shareholders is required to fill the vacancy or vacancies; or (iii) for such longer period as the Commission may prescribe by order upon application.

2. The Board will monitor the Fund for the existence of any material irreconcilable conflict between the interests of the contract owners of all Separate Accounts and participants of all Qualified Plans investing in such Fund, and determine what action, if any should be taken in response to such conflicts. A material irreconcilable conflict may arise for a variety of reasons, including: (i) an action by any state insurance regulatory authority; (ii) a change in applicable federal or state insurance tax, or securities laws or regulations, or a public ruling, private letter ruling, no-action or interpretative letter, or any similar action by insurance, tax, or securities regulatory authorities; (iii) an administrative or judicial decision in any relevant proceeding; (iv) the manner in which the investments of such Fund are being managed; (v) a difference in voting instructions given by variable annuity contract owners, variable life insurance contract owners, and trustees of the Qualified Plans; (vi) a decision by a Participating Insurance Company to disregard the voting instructions of contract owners; or (vii) if applicable, a decision by a Qualified Plan to disregard the voting instructions of Qualified Plan participants.

3. Participating Insurance Companies (on their own behalf, as well as by virtue of any investment of general account assets in a Portfolio), DFA, and any Qualified Plan that executes a participation agreement upon becoming an owner of 10 percent or more of the assets of any Portfolio (collectively, ''Participants'') will report any potential or existing conflicts to the Board. Participants will be responsible for assisting the Board in carrying out the Board's responsibilities under these conditions by providing the Board with all information reasonably necessary for the Board to consider any issues raised. This responsibility includes, but is not limited to, an obligation by each Participating Insurance Company to inform the Board whenever contract owner voting instructions are disregarded, and, if pass-through voting is applicable, an obligation by each Qualified Plan to inform the Board whenever it has determined to disregard Qualified Plan participant voting instructions. The responsibility to report such information and conflicts, and to assist the Board, will be a contractual obligation of all Participating Insurance Companies under their participation agreements with the Fund, and these responsibilities will be carried out with a view only to the interests of the contract owners. The responsibility to report such information and conflicts, and to assist the Board, also will be contractual obligations of all Qualified Plans with participation agreements, and such agreements will provide that these responsibilities will be carried out with a view only to the interests of Qualified Plan participants.

4. If it is determined by a majority of the Board, or a majority of the

disinterested Directors of the Board, that a material irreconcilable conflict exists, then the relevant Participant will, at its expense and to the extent reasonably practicable (as determined by a majority of the disinterested Directors), take whatever steps are necessary to remedy or eliminate the material irreconcilable conflict, up to and including: (i) Withdrawing the assets allocable to some or all of the Separate Accounts from the relevant Portfolio and reinvesting such assets in a different investment vehicle including another Portfolio, or in the case of Participating Insurance Company Participants submitting the question as to whether such segregation should be implemented to a vote of all affected contract owners and, as appropriate, segregating the assets of any appropriate group (*i.e.,* annuity contract owners or life insurance contract owners of one or more Participating Insurance Companies) that votes in favor of such segregation, or offering to the affected contract owners the option of making such a change; and (ii) establishing a new registered management investment company or managed separate account. If a material irreconcilable conflict arises because of a decision by a Participating Insurance Company to disregard contract owner voting instructions, and that decision represents a minority position or would preclude a majority vote, then the insurer may be required, at the election of the Fund, to withdraw such insurer's Separate Account's investment in the Fund, and no charge or penalty will be imposed as a result of such withdrawal. If a material irreconcilable conflict arises because of a Qualified Plan's decision to disregard Qualified Plan participant voting instructions, if applicable, and that decision represents a minority position or would preclude a majority vote, the Qualified Plan may be required, at the election of the Fund, to withdraw its investment in the Fund, and no charge or penalty will be imposed as a result of such withdrawal. The responsibility to take remedial action in the event of a Board determination of a material irreconcilable conflict and to bear the cost of such remedial action will be a contractual obligation of all Participants under their agreements governing participation in the Fund, and these responsibilities will be carried out with a view only to the interests of contract owners and Qualified Plan participants.

For purposes of this Condition 4, a majority of the disinterested members of the Board will determine whether or not any proposed action adequately remedies any material irreconcilable conflict, but, in no event will the Fund, DFA or an affiliate of DFA, as relevant, be required to establish a new funding vehicle for any Variable Contract. No Participating Insurance Company will be required by this Condition 4 to establish a new funding vehicle for any Variable Contract if any offer to do so has been declined by vote of a majority of the contract owners materially and adversely affected by the material irreconcilable conflict. Further, no Qualified Plan will be required by this Condition 4 to establish a new funding vehicle for the Qualified Plan if: (i) A majority of the Qualified Plan participants materially and adversely affected by the irreconcilable material conflict vote to decline such offer, or (ii) pursuant to documents governing the Qualified Plan, the Qualified Plan makes such decision without a Qualified Plan participant vote.

5. The Board's determination of the existence of a material irreconcilable conflict and its implications will be made known in writing promptly to all Participants.

6. As to Variable Contracts issued by Separate Accounts registered under the 1940 Act, Participating Insurance Companies will provide pass-through voting privileges to all Variable Contract owners as required by the 1940 Act as interpreted by the Commission. However, as to Variable Contracts issued by unregistered Separate Accounts, pass-through voting privileges will be extended to contract owners to the extent granted by the issuing insurance company. Accordingly, such Participants, where applicable, will vote shares of the applicable Portfolio held in their Separate Accounts in a manner consistent with voting instructions timely received from Variable Contract owners. Participating Insurance Companies will be responsible for assuring that each Separate Account investing in a Portfolio calculates voting privileges in a manner consistent with other Participants.

The obligation to calculate voting privileges as provided in this Application will be a contractual obligation of all Participating Insurance Companies under their agreement with the Funds governing participation in a Portfolio. Each Participating Insurance Company will vote shares for which it has not received timely voting instructions, as well as shares it owns through its Separate Accounts, in the same proportion as it votes those shares for which it has received voting instructions. Each Qualified Plan will vote as required by applicable law and governing Qualified Plan documents.

7. As long as the 1940 Act requires pass-through voting privileges to be provided to variable contract owners, DFA or any of its affiliates, and any General Account will vote its shares of any Portfolio in the same proportion of all variable contract owners having voting rights with respect to that Portfolio; provided, however, that DFA, any of its affiliates or any insurance company General Account shall vote its shares in such other manner as may be required by the Commission or its staff.

8. The Fund will comply with all provisions of the 1940 Act requiring voting by shareholders, which for these purposes, shall be the persons having a voting interest in the shares of the respective Portfolio, and, in particular, the Fund will either provide for annual meetings (except to the extent that the Commission may interpret Section 16 of the 1940 Act not to require such meetings) or comply with Section 16(c) of the 1940 Act (although the Fund is not one of the funds of the type described in Section 16(c) of the 1940 Act), as well as with Section 16(a) of the 1940 Act and, if and when applicable, Section 16(b) of the 1940 Act. Further, the Fund will act in accordance with the Commission's interpretation of the requirements of Section 16(a) of the 1940 Act with respect to periodic elections of trustees and with whatever rules the Commission may promulgate with respect thereto.

9. The Fund will notify all Participants that Separate Account prospectus disclosure or Qualified Plan prospectuses or other Qualified Plan disclosure documents regarding potential risks of mixed and shared funding may be appropriate. The Fund will disclose in its prospectus that (i) shares of the Fund may be offered to Separate Accounts of Variable Contracts and, if applicable, to Qualified Plans; (ii) due to differences in tax treatment and other considerations, the interests of various contract owners participating in the Fund and the interests of Qualified Plans investing in the Fund, if applicable, may conflict; and (iii) the Fund's Board will monitor events in order to identify the existence of any material irreconcilable conflicts and to determine what action, if any, should be taken in response to any such conflict.

10. If and to the extent that Rule 6e–2 and Rule 6e–3(T) under the 1940 Act are amended, or proposed Rule 6e–3 under the 1940 Act is adopted, to provide exemptive relief from any provision of the 1940 Act, or the rules promulgated thereunder, with respect to mixed or shared funding, on terms and

conditions materially different from any exemptions granted in the order requested in this Application, then the Fund and/or Participating Insurance Companies, as appropriate, shall take such steps as may be necessary to comply with Rules 6e–2 and 6e–3(T), or Rule 6e–3, as such rules are applicable.

11. The Participants, at least annually, will submit to the Board such reports, materials, or data as a Board reasonably may request so that the trustees of the Board may fully carry out the obligations imposed upon the Board by the conditions contained in this Application. Such reports, materials, and data will be submitted more frequently if deemed appropriate by the Board. The obligations of the Participants to provide these reports, materials, and data to the Board, when it so reasonably requests, will be a contractual obligation of all Participants under their agreements governing participation in the Portfolios.

12. All reports of potential or existing conflicts received by the Board, and all Board action with regard to determining the existence of a conflict, notifying Participants of a conflict, and determining whether any proposed action adequately remedies a conflict, will be properly recorded in the minutes of the Board or other appropriate records, and such minutes or other records shall be made available to the Commission upon request.

13. The Fund will not accept a purchase order from a Qualified Plan if such purchase would make the Qualified Plan shareholder an owner of 10 percent or more of the assets of such Portfolio unless such Qualified Plan executes an agreement with the Fund governing participation in such Portfolio that includes the conditions set forth herein to the extent applicable. A Qualified Plan or Qualified Plan participant will execute an application containing an acknowledgment of this condition at the time of its initial purchase of shares of any Portfolio.

For the Commission, by the Division of Investment Management, pursuant to delegated authority.

Margaret H. McFarland,

Deputy Secretary.

[FR Doc. 02–4053 Filed 2–19–02; 8:45 am]

BILLING CODE 8010–01–P

SECURITIES AND EXCHANGE COMMISSION

Eagle Building Technologies, Inc. File No. 500–1; Order of Suspension of Trading

February 15, 2002.

It appears to the Securities and Exchange Commission that there is a lack of current and accurate information concerning the securities of Eagle Building Technologies, Inc. (''Eagle Building''), because of questions regarding the accuracy of assertions by Eagle Building, and by others, in documents sent to and statements made to market makers of the stock of Eagle Building, other broker-dealers, and investors concerning, among other things: (1) The company's foreign operations and (2) post-September 11 security measures marketed by Eagle Building, including an airport baggage security system, mail sterilization technology, and money laundering detection software.

The Commission is of the opinion that the public interest and the protection of investors require a suspension of trading in the securities of the above-listed company.

Therefore, it is ordered, pursuant to Section 12(k) of the Securities Exchange Act of 1934, that trading in the above-listed company is suspended for the period from 9:30 a.m. EST, February 15, 2002, through 11:59 p.m. EST, on March 1, 2002.

By the Commission.

Jonathan G. Katz,

Secretary.

[FR Doc. 02–4146 Filed 2–15–02; 4:08 pm]

BILLING CODE 8010–01–M

SECURITIES AND EXCHANGE COMMISSION

[Release No. 34–45430; File No. SR–DTC–2002–01]

Self-Regulatory Organizations; The Depository Trust Company; Notice of Filing and Immediate Effectiveness of Proposed Rule Change Relating to Dutch Issues in the Direct Registration System and to a Modification to the Surety Bond That is Part of the Direct Registration System

February 11, 2002.

Pursuant to section 19(b)(1) of the Securities Exchange Act of 1934 (''Act''),[1] notice is hereby given that on January 18, 2002, The Depository Trust Company (''DTC'') filed with the Securities and Exchange Commission (''Commission'') the proposed rule change as described in Items I, II, and III below, which items have been prepared primarily by DTC. The Commission is publishing this notice to solicit comments on the proposed rule change from interested parties.

I. Self-Regulatory Organization's Statement of the Terms of Substance of the Proposed Rule Change

The proposed rule change provides (i) an interpretation of a rule relating to Dutch issues in the Profile Modification System (''Profile'') feature of the Direct Registration System (''DRS'') facility and (ii) increases the limits of the surety bond that is part of the Profile Surety Program (''PSP'').[2]

II. Self-Regulatory Organization's Statement of the Purpose of, and Statutory Basis for, the Proposed Rule Change

In its filing with the Commission, DTC included statements concerning the purpose of and basis for the proposed rule change and discussed any comments it received on the proposed rule change. The text of these statements may be examined at the places specified in Item IV below. DTC has prepared summaries, set forth in sections (A), (B) and (C) below, of the most significant aspects of these statements.[3]

(A) Self-Regulatory Organization's Statement of the Purpose of, and Statutory Basis for, the Proposed Rule Change

The purpose of the proposed rule change is to (i) provide an interpretation with respect to Dutch issues in DRS and (ii) increase the limits of the surety bond that is part of PSP.

(1) Dutch Issues

DTC established a deadline of December 14, 2001, as the date by which all securities issues eligible for DRS would have to be eligible for processing through Profile.[4] Counsel for a transfer agent for securities of certain Dutch issuers has informed DTC, however, that in order for a transfer of registration of Dutch securities to be

[1] 15 U.S.C. 78s(b)(1).

[2] For a description of DRS, including Profile and PSP, refer to Securities Exchange Act Release Nos. 35038 (December 1, 1994), 59 FR 63652; 37931 (November 7, 1996), 61 FR 58600; 41862 (September 10, 1999), 64 FR 51162; 42366 (January 28, 2000), 65 FR 5714; 42704 (April 19, 2000), 65 FR 24242; 43586 (November 17, 2000), 65 FR 70745; 44696 (August 14, 2001), 66 FR 43939; and 45232 (January 3, 2002), 67 FR 1254.

[3] The Commission has modified the text of the summaries prepared by DTC.

[4] See Securities Exchange Act Release Nos. 44696 (August 14, 2001), 66 FR 43939 [File No. SR–DTC–2001–07] and 45232 (January 3, 2002), 67 FR 1254 (File No. SR–DTC–2001–18).

effected under Dutch law, a deed (*i.e.,* a stock power) signed by the transferor must be presented to or on behalf of and acknowledged by or on behalf of the Dutch issuer. DTC has been informed that this requirement could be satisfied by the following mechanism that DTC proposes to adopt for Dutch issues eligible for DRS.

In order to ensure Dutch law is complied with, the transfer agent would put a flag on each account of a registered holder of a DRS position in a Dutch issue. Such registered holders would be sent a ''Notice'' describing Profile and informing them that in order to avail themselves of Profile and have any future transfer of the Dutch securities under Profile be in compliance with Dutch law, such registered holders would be required to complete and deliver to the transfer agent a signed deed in the form provided by the transfer agent. At such time as the transfer agent receives a properly executed deed from a holder, the flag will be removed from the holder's account. If a Profile transaction or any other attempted movement of a position through DRS is proposed on a flagged account, it will be rejected until the deed has been properly received.

For the two Dutch issues currently in DRS, the Notice would initially be mailed to affected holders by January 15, 2002. A follow-up reminder Notice would be mailed to such holders by February 20, 2002. The last day for such holders to submit their deeds to the issuer would be March 29, 2002. Any such holders that have not submitted a deed by March 29, 2002, would be certificated beginning on April 1, 2002. After January 15, 2002, and continuing in the future, any new holders of a DRS position in a Dutch issue would have seventy-five days from the date such position is created to deliver a deed. If a deed is not received within seventy-five days, the position would be certificated.

Such a procedure will serve to facilitate the movement of Dutch issuers' securities issues that are already in DRS into Profile and should help ensure that holders of DRS positions are kept in DRS. For any new Dutch issues going into DRS, registered holders of DRS positions will have seventy-five days from the time of becoming a DRS holder to submit a deed or else have their position certificated. DTC interprets its current rules relating to the administration of the DRS facility and Profile as being satisfied by the above-described mechanism.

(2) PSP Surety Bond

In a previous rule filing with the Commission, DTC set forth certain requirements for the surety bond to be issued in connection with PSP.[5] One characteristic of the surety bond was that it was required to have a limit of $2 million per occurrence with an aggregate limit of $6 million. The surety bond is now required to have a limit of $3 million per occurrence. The required aggregate limit remains $6 million. DTC is not aware of any increases in price that will accrue to subscribers of the surety bond at this point in time.

The proposed rule change is consistent with the requirements section 17A of the Act and the rules and regulations thereunder applicable to DTC because it clarifies DTC's interpretation of its rule thereby eliminating confusion in the industry relating to the implementation of the Profile feature, providing for more expeditious implementation of Profile, and strengthening a risk management feature of Profile. The proposed rule change will be implemented consistently with the safeguarding of securities and funds in DTC's custody or control or for which it is responsible because the operation of DRS, as modified by the proposed rule change, will be similar to the current operation of DRS.

(B) Self-Regulatory Organization's Statement on Burden on Competition

DTC perceives no adverse impact on competition by reason of the proposed rule change.

(C) Self-Regulatory Organization's Statement on Comments on the Proposed Rule Change Received from Members, Participants or Others

Written comments from DTC participants or others have not been solicited or received on the proposed rule change.

III. Date of Effectiveness of the Proposed Rule Change and Timing for Commission Action

The foregoing rule change has become effective pursuant to section 19(b)(3)(A)(i)[6] of the Act and Rule 19b–4(f)(1)[7] promulgated thereunder because the proposal constitutes a stated interpretation with respect to the meaning, administration, or enforcement of an existing rule. At any time within sixty days of the filing of such proposed rule change, the Commission may summarily abrogate such rule change if it appears to the Commission that such action is necessary or appropriate in the public interest, for the protection of investors, or otherwise in furtherance of the purposes of the Act.

IV. Solicitation of Comments

Interested persons are invited to submit written data, views, and arguments concerning the foregoing, including whether the proposed rule change is consistent with the Act. Persons making written submissions should file six copies thereof with the Secretary, Securities and Exchange Commission, 450 Fifth Street, NW, Washington, DC 20549–0609. Copies of the submission, all subsequent amendments, all written statements with respect to the proposed rule change that are filed with the Commission, and all written communications relating to the proposed rule change between the Commission and any person, other than those that may be withheld from the public in accordance with the provisions of 5 U.S.C. 552, will be available for inspection and copying in the Commission's Public Reference Section, 450 Fifth Street, NW, Washington, DC 20549. Copies of such filing also will be available for inspection and copying at the principal office of DTC. All submissions should refer to File No. SR–DTC–2002–01 and should be submitted by March 13, 2002.

For the Commission by the Division of Market Regulation, pursuant to delegated authority.[8]

Margaret H. McFarland,

Deputy Secretary.

[FR Doc. 02–4014 Filed 2–19–02; 8:45 am]

BILLING CODE 8010–01–P

[5] Securities Exchange Act Release No. 43586 (November 17, 2000), 65 FR 70745 (File No. SR–DTC–00–09).

[6] 15 U.S.C. 78s(b)(3)(A)(i).

[7] 17 CFR 240.19b–4(f)(1).

[8] 17 CFR 200.30–3(a)(12).

SECURITIES AND EXCHANGE COMMISSION

[Release No. 34–45436; File No. SR–Phlx–2001–24]

Self-Regulatory Organizations; Notice of Filing of Proposed Rule Change and Amendments Nos. 1, 2, 3, and 4 Thereto by the Philadelphia Stock Exchange, Inc. Relating to the Manual Handling of Certain AUTOM Orders by Specialists

February 12, 2002.

Pursuant to section 19(b)(1) of the Securities Exchange Act of 1934

(''Act'')[1] and Rule 19b–4 thereunder,[2] notice is hereby given that on March 2, 2001, the Philadelphia Stock Exchange, Inc. (''Phlx'' or ''Exchange'') filed with the Securities and Exchange Commission (''SEC'' or ''Commission'') the proposed rule change as described in Items I, II, and III below, which Items have been prepared by the Phlx. On April 13, 2001, the Phlx submitted Amendment No. 1 to the proposed rule change.[3] On July 3, 2001, the Phlx submitted Amendment No. 2 to the proposed rule change.[4] On August 8, 2001, the Phlx submitted Amendment No. 3 to the proposed rule change.[5] On December 11, 2001, the Phlx submitted Amendment No. 4 to the proposed rule change.[6] The Commission is publishing this notice to solicit comments on the proposed rule change, as amended, from interested persons.

I. Self-Regulatory Organization's Statement of the Terms of Substance of the Proposed Rule Change

The Phlx proposes to adopt Phlx Rule 1080(c)(iv) to codify that an options order otherwise eligible for the Exchange's Automated Execution System (''AUT–X'') will instead be manually handled by the specialist in certain circumstances. Specifically, an options order entered through the Exchange's Automated Options Market (''AUTOM'') System,[7] that is otherwise eligible for AUTO–X, may instead be handled manually by the specialist. Below is the text of the proposed rule change. Additions are *italicized*.

Rule 1080. Philadelphia Stock Exchange Automated Options Market (AUTOM) and Automatic Execution System (AUTO–X)

(a)–(b) No change.

(c) AUTO–X—AUTO–X is a feature of AUTOM that automatically executes *eligible* public customer market and marketable limit orders up to the number of contracts permitted by the Exchange for certain strike prices and expiration months in equity options and index options, unless the Options Committee determines otherwise. AUTO–X automatically executes eligible orders using the Exchange disseminated quotation *(except if executed pursuant to the NBBO Feature in sub-paragraph (i) below)* and then automatically routes execution reports to the originating member organization. AUTOM orders not eligible for AUTO–X are executed manually in accordance with Exchange rules. Manual execution may also occur when AUTO–X is not *engaged, such as pursuant to sub-paragraph (iv) below.* An order may also be executed partially by AUTO–X and partially manually.

The Options Committee may for any period restrict the use of AUTO–X on the Exchange in any option or series. Currently, orders up to 100 contracts, subject to the approval of the Options Committee, are eligible for AUTO–X.

The Options Committee may, in its discretion, increase the size of orders in one or more classes of multiply-traded equity options eligible for AUTO–X to the extent necessary to match the size of orders in the same options eligible for entry into the automated execution system of any other options exchange, provided that the effectiveness of any such increase shall be conditioned upon its having been filed with the Securities and Exchange Commission pursuant to section 19(b)(3)(A) of the Securities Exchange Act of 1934.

(i) AUTO–X on the NBBO (NBBO Feature). AUTO–X on the NBBO (the ''NBBO Feature'') is a feature of AUTOM that automatically executes at the National Best Bid or Offer (''NBBO''). NBBO Feature will execute AUTO–X eligible orders at the NBBO for certain options designated by the Options Committee as eligible for the NBBO Feature (''automatic step-up options''), provided that the NBBO does not differ from the specialist's best bid or offer by more than the ''step up parameter.''

(A)–(C) No change.

(D)–(E) Reserved.

(ii) No change.

(iii) Reserved.

(iv) Except as otherwise provided in this Rule, in the following circumstances, an order otherwise eligible for AUTO–X will instead be manually handled by the specialist:

(A) the Exchange's disseminated market is crossed (i.e., 2–1/8 bid, 2 offer) or locked (i.e., 2 bid, 2 offer), or crosses or locks the disseminated market of another options exchange;

(B) one of the following order types: stop, stop limit, market on closing, market on opening, or an all-or-none order where the full size of the order cannot be executed;

(C) the AUTOM System is not open for trading when the order is received (which is known as a pre-market order);

(D) the disseminated market is produced during an opening or other rotation;

(E) when the specialist posts a bid or offer that is better than the specialist's own bid or offer;

(F) if the NBBO Feature, described in paragraph (c)(i) above, is not engaged, and the Exchange's bid or offer is not the NBBO;

(G) when the price of a limit order is not in the appropriate minimum trading increment pursuant to Rule 1034;

(H) when the bid price is zero respecting sell orders; and

(I) when the number of contracts automatically executed within a 15 second period in an option (subject to a pilot program until May 30, 2002) exceeds the AUTO–X guarantee, a 30 second period ensues during which subsequent orders are handled manually.

(d)–(j) No Change.

Commentary: No change.

II. Self-Regulatory Organization's Statement of the Purpose of, and Statutory Basis for, the Proposed Rule Change

In its filing with the Commission, the Phlx included statements concerning the purpose of, and basis for, the proposed rule change and discussed any comments it received on the proposed rule change. The text of these statements may be examined at the places specified in Item IV below. The Phlx has prepared summaries, set forth in sections A, B, and C below, of the most significant aspects of such statements.

[1] 15 U.S.C. 78s(b)(1).

[2] 17 CFR 240.19b–4.

[3] *See* Letter from Richard S. Rudolph, Counsel, Phlx, to Nancy J. Sanow, Assistant Director, Division of Market Regulation (''Division''), Commission, dated April 12, 2001 (''Amendment No. 1''). Amendment No. 1 designates the proposed rule change as filed pursuant section 19(b)(2) of the Act, and the Exchange requests that the proposed rule change is given accelerated effectiveness. 15 U.S.C. 78s(b)(2).

[4] *See* Letter from Richard S. Rudolph, Counsel, Phlx, to Nancy J. Sanow, Assistant Director, Division, Commission, dated July 2, 2001 (''Amendment No. 2''). Amendment No. 2 corrects technical errors to the proposed rule text.

[5] *See* Letter from Richard S. Rudolph, Counsel, Phlx, to Nancy J. Sanow, Assistant Director, Division, Commission, dated August 7, 2001 (''Amendment No. 3''). Amendment No. 3 updates the proposed rule text that refers to a pilot program that permits the Exchange to automatically execute option contracts within a 15 second period. In addition, Amendment No. 3 corrects technical errors to the proposed rule text.

[6] *See* Letter from Richard S. Rudolph, Counsel, Phlx, to Nancy J. Sanow, Assistant Director, Division, Commission, dated December 10, 2001 (''Amendment No. 4''). Amendment No. 4 replaces the original filing in its entirety and modifies earlier revisions by: (1) Discussing the calculation of a zero bid by the Exchange's Autoquote System; (2) discussing the Exchange's audit trail and other documentation in cases which AUTO–X is disengaged; (3) discussing the authority of the Exchange's Options Committee to restrict the use of AUTO–X on the Exchange; and (4) updating the proposed rule text that refers to the pilot program that permits the Exchange to automatically execute option contracts within a 15 second period.

[7] AUTOM is the Phlx's automated order routing, delivery, execution, and reporting system for options.

A. Self-Regulatory Organization's Statement of the Purpose of, and Statutory Basis for, the Proposed Rule Change

1. Purpose

The purpose of the proposed rule change is to codify the situations in which an otherwise eligible AUTO–X order is handled manually by the specialist. The Phlx believes that the proposal also clarifies that the manual handling of such orders reflects the normal operation of AUTOM and AUTO–X.[8] Currently, Phlx Rule 1080, ''Philadelphia Stock Exchange Automated Options Market (AUTOM) and Automated Execution System (AUTO–X),'' governs the operation of AUTOM. AUTO–X is addressed primarily in paragraph (c) of the rule. Phlx Rule 1080(c) provides that only certain order types are eligible for AUTO–X. Specifically, Rule 1080(c) currently provides that AUTO–X is a feature of AUTOM that automatically executes public customer market and marketable limit orders up to the number of contracts permitted by the Exchange for certain strike prices and expiration months in equity options and index options, unless the Options Committee determines otherwise.

According to the Phlx, AUTO–X automatically executes eligible orders using the Exchange disseminated quotation and then automatically routes execution reports to the originating member organization.[9] In all other circumstances, AUTOM orders that are not eligible for AUTO–X would be executed manually in accordance with Exchange rules.

According to the Exchange, Phlx Rule 1080 currently enumerates some of the situations where an order may not be automatically executed. For example, manual execution may occur when AUTO–X is not engaged.[10] In addition, Rule 1080(c) also currently states that an order may be executed partially by AUTO–X and partially handled manually by the specialist.

The Phlx is proposing to codify nine additional situations in which an order would not automatically execute. First, if the Exchange's disseminated market is crossed (*i.e.,* 2⅛ bid, 2 offer) or locked (*i.e.,* 2 bid, 2 offer), there is no valid market, such that no automatic execution would occur.[11] If the Exchange's disseminated market crosses or locks the disseminated market of another options exchange, an incoming AUTOM order would not automatically execute in order to prevent a trade-through from occurring.

Second, the following order types do not automatically execute: stop, stop limit, market on closing, and market on opening, because these orders consist of contingencies, such as pricing (stop at a certain price) or timing (execute only on the opening) that the AUTOM System cannot address.[12] Similarly, an all-or-none order where the full size of the order cannot be executed is not eligible for AUTO–X because such an order has no standing and is thus inconsistent with automated handling.[13]

Third, AUTOM orders received when the AUTOM System is not open for trading (known as pre-market orders) are not eligible for automatic execution because they are entitled to the opening price.[14] The Phlx also notes that openings are handled manually, with AUTO–X engaged promptly following an option's opening,[15] once there is an established price against which an automatic execution can occur.[16]

Fourth, when the disseminated market is produced during an opening or other rotation, an incoming order is not automatically executed, similar to pre-market orders, because there must be an established price against which an automatic execution can occur.

Fifth, an incoming AUTOM order will not automatically execute when the specialist posts a bid or offer that is better than the specialist's own bid or offer. The bid or offer could represent a customer order or a price-improving bid or offer by a Registered Options Trader (''ROT''). Currently, these can be displayed manually by the specialist using a certain indicator, which causes AUTO–X (and its trade allocation feature, the Wheel)[17] to not engage. Thus, any incoming order would be manually handled by the specialist in lieu of automatic execution.[18]

Sixth, certain options are subject to the NBBO Feature, described in Phlx Rule 1080(c)(i), which automatically executes eligible orders at the National Best Bid or Offer (''NBBO'') provided that the NBBO does not differ from the specialist's best bid or offer by more than the ''step-up parameter,'' which is determined by the Options Committee. According to the Phlx, participation on an option-by-option basis in the NBBO Feature is voluntary, such that if the specialist elects not to engage the NBBO Feature, or disengages it pursuant to the Exchange rule, and the Exchange's disseminated bid or offer is inferior to the NBBO, an incoming AUTOM order would not automatically execute. Thus, in order to prevent AUTO–X from creating a trade-through, such an order would be handled manually.[19]

Seventh, when the price of an order is not expressed in the appropriate minimum trading increment pursuant to Phlx Rule 1034, the order would not be automatically executed because the price is presumed to be invalid. Nevertheless, in lieu of rejecting such an order, the order would be handled manually by the specialist, which may result in an execution at a better price and in the correct increment. For example, where the market is 2.00–2.25, an incoming buy order for 2.21 would not automatically execute; while manually handled by the specialist, it may be executed at 2.20, a better price.

Eighth, where the bid price for a particular option series is zero, an incoming AUTOM sell order would not automatically execute, because the ''zero'' price is not a valid execution price. According to the Phlx, a ''zero'' bid price is typically calculated by Auto-Quote, the Exchange's automatic pricing system, when an option that is well out-of-the-money approaches expiration, and thus has neither intrinsic value nor time value. In such circumstance, as stated above, an incoming order to sell would not be AUTO–X eligible, since an automatic execution is not possible at a ''zero'' bid.

[8] On September 11, 2000, the SEC issued an order, which required the Phlx (as well as the other options exchanges) to implement certain undertakings. One such undertaking was to adopt new, or amend existing exchange rules concerning automatic quotation and execution systems which specify the circumstances, if and, by which automated execution systems would be disengaged or operated in any manner other than the normal manner set forth in the exchange's rules; and, require the documentation of the reasons for each decision to disengage an automatic execution system or operate it in any manner other than the normal manner. *See In the Matter Certain Activities of Options Exchanges,* Securities Exchange Act Release No. 43268 (September 11, 2000). The proposed rule change codifies that such orders being handled manually by specialists in the stated circumstances is the normal operation of AUTOM and AUTO–X.

[9] The Exchange is also proposing to cross-reference Phlx Rule 1080(c)(i), ''AUTO–X on the NBBO (NBBO Feature),'' in cases in which AUTO–X will not execute at the Exchange's disseminated quotation.

[10] *See* Phlx Rule 1080(e), and Option Floor Procedure Advices A–13 and F–10.

[11] *See also* CBOE Rule 6.8(c).

[12] *See e.g.,* Option Floor Procedure Advice A–5 (''Execution of Stop and Stop Limit Orders'').

[13] *See* Option Floor Procedure Advice A–9 (''All-or-None Option Orders'').

[14] *See* Option Floor Procedure Advice A–12 (''Opening Rotations and SORT Procedures'').

[15] *See* Option Floor Procedure Advice A–13 (''Auto Execution Engagement/Disengagement Responsibility'').

[16] The Exchange believes that CBOE Rule 6.8(f) similarly provides that RAES does not operate until after the opening. *See* CBOE Rule 6.8(f).

[17] *See* Option Floor Procedure Advice F–24 (''AUTO–X Contra-Party Participation (The Wheel)'').

[18] *See also* CBOE Rule 6.8(b).

[19] *See also* CBOE Rule 6.8, Interpretations and Policies .02 for a similar provision.

Lastly, the Phlx represents that certain options are subject to a pilot program under which when the number of contracts automatically executed within a 15 second period exceeds the AUTO–X guarantee, a 30 second period ensues during which subsequent orders are handled manually.[20] The Phlx proposes to codify this program, which is discussed more fully in its adopting release, in Rule 1080(c).

In any of these situations, the Phlx would disseminate a message to its quotation vendors that indicates to users on a series-by-series basis, whether or not such series is AUTO–X eligible. Internally, the Phlx represents that it maintains an electronic audit trail, called an AUTO–X Disengagement Log, that electronically monitors and records every situation in which AUTO–X is disengaged. According to the Phlx, the AUTO–X Disengagement Log indicates whether the disengagement was done automatically by AUTOM for any of the nine aforementioned reasons, or pursuant to a request by the specialist. In the latter situation, the Phlx represents that approval of two Floor Officials is required to disengage AUTO–X. The Market Surveillance Department of the Phlx maintains a record of each such situation.

Additionally, Phlx Rule 1080 provides that the Options Committee may for any period restrict the use of AUTO–X on the Exchange in any option or series.[21] According to the Phlx, such restriction may, in some instances, affect the eligibility of certain options to be executed via AUTO–X. For example, the Options Committee has previously restricted certain options from AUTO–X eligibility due to the unusual volatility in certain series, or due to the unusually high premiums for deep in-the-money options that generally do not generate interest from public customers.[22] The Phlx represents that any restriction on the use of AUTO–X on the Exchange in any option or series approved by the Options Committee will be clearly communicated to its membership and AUTOM users through an electronic message via AUTOM, and through an Exchange information circular. The Phlx also represents that such restriction would not take effect until after such communication has been made.

2. Statutory Basis

The Phlx believes that its proposal is consistent with section 6(b) of the Act in general,[23] and furthers the objectives of section 6(b)(5) of the Act in particular,[24] in that it is designed to promote just and equitable principles of trade, remove impediments to and perfect the mechanism of a free and open market and protect investors and the public interest by causing certain AUTOM orders to be handled manually.

B. Self-Regulatory Organization's Statement on Burden on Competition

The Phlx believes that the proposed rule change does not impose any burden on competition that is not necessary or appropriate in furtherance of the purposes of the Act.

C. Self-Regulatory Organization's Statement on Comments on the Proposed Rule Change Received From Members, Participants, or Others

The Phlx has neither solicited nor received any written comments on the proposed rule change.

III. Date of Effectiveness of the Proposed Rule Change and Timing for Commission Action

Within 35 days of the publication of this notice in the **Federal Register** or within such longer period (i) as the Commission may designate up to 90 days of such date if it finds such longer period to be appropriate and publishes its reasons for so finding or (ii) as to which the Exchange consents, the Commission will:

(A) By order approve such proposed rule change or

(B) Institute proceedings to determine whether the proposed rule change should be disapproved.

IV. Solicitation of Comments

Interested persons are invited to submit written data, views and arguments concerning the foregoing, including whether the proposed rule change, as amended, is consistent with the Act. Persons making written submissions should file six copies thereof with the Secretary, Securities and Exchange Commission, 450 Fifth Street, NW, Washington, DC 20549–0609. Copies of the submission, all subsequent amendments, all written statements with respect to the proposed rule change that are filed with the Commission, and all written communications relating to the proposed rule change between the Commission and any person, other than those that may be withheld from the public in accordance with the provisions of 5 U.S.C. 552, will be available for inspection and copying in the Commission's Public Reference Room. Copies of such filing will also be available for inspection and copying at the principal office of the Phlx.

All submissions should refer to File No. SR–Phlx–2001–24 and should be submitted by March 13, 2002.

For the Commission by the Division of Market Regulation, pursuant to delegated authority.[25]

Margaret H. McFarland,

Deputy Secretary.

[FR Doc. 02–4055 Filed 2–19–02; 8:45 am]

BILLING CODE 8010–01–P

[20] *See* Securities Exchange Act Release No. 45090 (November 21, 2001), 66 FR 59834 (November 30, 2001) (SR–PHLX–2001–100).

[21] The Options Committee has supervision of all connections or means of communications with the equity and index options trading floor and may require the discontinuance of any such connection or means of communication when, in the opinion of the Committee, it is contrary to the welfare or interest of the Exchange. *See* Phlx By-Law Article X, Section 10–19. The Phlx believes that such connections and means of communication include AUTOM and AUTO–X.

[22] *See* Securities Exchange Act Release No. 36467 (November 8, 1995), 60 FR 57615 (November 16, 1995) (order approving SR–Phlx–95–33). The Commission approved the Exchange's limitation of AUTO–X eligibility for National Over-the-Counter Index (''XOC'') options to XOC series where the bid is $10 or less. The Options Committee approved this restriction due to the significantly reduced public customer demand for high priced XOC options, and to the unusually high volatility in over-the-counter markets at the time, which made it increasingly difficult for specialists and market makers to monitor quotations to reflect changes in the markets for underlying securities.

[23] 15 U.S.C. 78f(b).

[24] 15 U.S.C. 78f(b)(5).

[25] 17 CFR 200.30–3(a)(12).

SMALL BUSINESS ADMINISTRATION

Region VI Regulatory Fairness Board; Public Federal Regulatory Enforcement Fairness Roundtable

The Small Business Administration Region VI Regulatory Fairness Board and the SBA Office of the National Ombudsman, will hold a Public Roundtable on Wednesday, February 20, 2002 at 1 p.m. at the Arkansas State Chamber of Commerce /AIA, 410 South Cross Street, Little Rock, Arkansas 72201, to provide small business owners and representatives of trade associations with an opportunity to share information concerning the federal regulatory enforcement and compliance environment.

Anyone wishing to attend or to make a presentation must contact Deb Mathis in writing or by fax, in order to be put on the agenda. Deb Mathis, Arkansas State Chamber of Commerce /AIA, 410 South Cross Street, Little Rock, Arkansas 72201, Phone (501) 374–9225, fax (501) 372–2722, e-mail *Dmathis@ascc-aia.org.*

For more information see our website at *http://www.sba.gov/ombudsman/events/dsp_roundtable.html.*

Dated: February 12, 2002.

Michael L. Barrera,

National Ombudsman.

[FR Doc. 02–4010 Filed 2–19–02; 8:45 am]

BILLING CODE 8025–01–P

TENNESSEE VALLEY AUTHORITY

Environmental Impact Statement for Addition of Electric

Generation Baseload Capacity in Tennessee

AGENCY: Tennessee Valley Authority.

ACTION: Notice of intent.

SUMMARY: The Tennessee Valley Authority (TVA) is providing this notice pursuant to the Council on Environmental Quality's regulations (40 CFR 1500–1508), TVA's procedures implementing the National Environmental Policy Act, and section 106 of the National Historic Preservation Act and its implementing regulations (36 CFR part 800).

TVA will prepare an environmental impact statement (EIS) to assess the impact of a proposal made by Pickwick Power, LLC (PPLLC) to build and operate a coal-fired generating plant in Tennessee. The plant would supply intermediate or baseload capacity to the TVA electric generation system to meet growing power demands. PPLLC has proposed a site in Hardin County near Savannah, Tennessee, near the west shore of the Tennessee River at mile 203.

The following Federal actions are proposed at this time so that PPLLC can undertake the project:

• TVA's entering into a contract with PPLLC for buying electricity from the facility, interconnecting the facility with the TVA transmission system, and supplying the fuel and limestone for the facility.

• TVA's approval under section 26a of the TVA Act for PPLLC's construction of barge unloading facilities, water intakes, and discharge outfalls associated with the facility. Approvals may also have to be obtained from the U.S. Army Corps of Engineers under section 404 of the Clean Water Act and Section 10 of the Rivers and Harbors Act of 1899 for construction of the unloading facilities, water intakes, and discharge outfalls.

TVA will use the EIS process to obtain public comments on this proposal. This notice invites public comment concerning scope of the EIS, alternatives and environmental issues that should be addressed as a part of this EIS, and potential for impacts to historic properties such as archaeological resources and historic sites and structures.

DATES: Comments must be postmarked or e-mailed no later than March 21, 2002, to ensure their consideration in determining the scope of issues to be addressed and for identifying the significant issues relating to the proposed action.

ADDRESSES: Written comments and requests for further information should be sent to Peter K. Scheffler, Specialist, National Environmental Policy Act, Tennessee Valley Authority, mail stop WT 8C, 400 West Summit Hill Drive, Knoxville, Tennessee 37902–1499. Comments may be e-mailed to *pkscheffler@tva.gov.*

SUPPLEMENTARY INFORMATION:

Project Description

PPLLC has presented TVA with a proposal to supply baseload or intermediate power generated by a 100 Megawatt (MW) electric power plant. TVA would provide the fuel for the facility and pay a fee to convert the fuel to energy. PPLLC has proposed to build and operate the proposed facility at a site in Hardin County. The facility would begin generating power in 2004.

The proposed plant would consist of one coal-fired circulating fluidized bed combustion (CFBC) boiler, a steam turbine, and an electric generator. These components would be manufactured at existing facilities in China and transported to an existing shipyard in China for installation on two barges. The barges would also be manufactured, and the complete barge-mounted power generation module would be tested, in China before transport to the United States.

The barges would be loaded on a ship for dry transport to Mobile, Alabama, where they would then be placed into the water and towed up the Tennessee-Tombigbee Waterway to the proposed plant site. At the site, the barges would be removed from the Tennessee River by heavy lift, moved with the help of multi-wheeled transporters to a site probably several thousand feet west of the river, and placed on a foundation designed to fit the bottom of the barges. Final assembly would then take place, including connecting to the TVA power system.

The facility would also include other major balance-of-plant components such as barge unloading facilities, fuel handling and storage facilities, water intake and discharge structures, and electrical interconnection facilities. Barge unloading facilities would be constructed capable of unloading the facility barges (as noted above) and 1800-ton coal and limestone barges. Because the barge unloading facilities would require alteration of the shoreline and possibly dredging of the reservoir bottom, they would need approval from TVA under section 26a of the TVA Act and probably permits from the United States Army Corps of Engineers under section 10 of the Rivers and Harbors Act and section 404 of the Clean Water Act. Facilities such as conveyors would be needed to transport fuel and limestone to storage facilities and to the boiler. Areas would be identified on-site for coal and limestone storage. Facilities would also be built to store No.2 diesel that would be delivered to the boilers as fuel for standby and start-up. An ash disposal landfill of sufficient size to store ash generated from the process would be located adjacent to the facility. Section 26a approvals from TVA and sections 10 and 404 permits from the U.S. Army Corps of Engineers may also be required for process and potable water intakes and for wastewater discharge outfalls. To contain these various components, the proposed site could be as large as several hundred acres.

Background: TVA's Integrated Resource Plan and the Need for Power

This EIS will tier from TVA's *Energy Vision 2020:* An Integrated Resource Plan and Final Programmatic Environmental Impact Statement. *Energy Vision 2020* was completed in December 1995 and a Record of Decision issued on February 28, 1996 (61 FR 7572). *Energy Vision 2020* analyzed a full range of supply-side and demand-side options to meet customer energy needs for the period 1995 to 2020. These options were ranked using several criteria including environmental performance. Favorable options were formulated into strategies. A group of options drawn from several effective strategies was chosen as TVA's preferred alternative. The supply-side options selected to meet peaking and baseload capacity needs through the 2005 period included: (1) Addition of simple cycle or combined cycle combustion turbines to TVA's generation system, (2) purchase of call options for peaking or baseload capacity, and (3) market purchases of peaking or baseload capacity. The short-term action plan of *Energy Vision 2020* identified a need for 3,000 MW of baseload and peaking additions through the year 2002. This is in addition to the baseload capacity additions of the successful completion of Watts Bar Nuclear Plant Unit 1 and the return to

service of Browns Ferry Nuclear Plant Unit 3.

Each year TVA provides updated projections of supply and demand to the TVA sub-region of the Southeastern Electric Reliability Council (SERC) for the U.S. Department of Energy's annual report EIA–411. The 1999 projection (latest available) shows expected baseload demands growing at 2.2 percent from 1999 to 2004. The net capacity needed to meet the growth in demand is expected to increase by 3,400 megawatts by year 2003. (See line item 13 on Table—Item 2.1 Projected Capacity and Demand—Summer of the EIA–411 report.) The addition of the 100 MW Pickwick Power plant is needed by TVA to meet this projected regional power demand for baseload capacity.

Because *Energy Vision 2020* identified and evaluated alternative supply-side and demand-side energy resources and technologies for meeting peak and baseload capacity needs, these alternatives would not be re-evaluated in this EIS. Market power purchases was one supply-side option identified in the EIS as necessary for meeting TVA's baseload and peaking capacity needs.

Proposed Issues To Be Addressed

TVA contemplates that the EIS would describe the existing environmental and socioeconomic resources affected by transportation of the barges to the site, construction of the balance-of-plant components on site, and operation of the power plant. TVA's evaluation of environmental impacts to these resources would include, but not necessarily be limited to, the potential impacts on air quality, water quality, aquatic and terrestrial ecology, endangered and threatened species, wetlands, floodplains, aesthetics and visual resources, noise, land use, historic and archaeological resources, and socioeconomic resources.

Alternatives

At this time, the alternatives TVA has identified for detailed evaluation include no action and the proposed plant at the Hardin County site. During the scoping process, TVA will investigate the feasibility of other alternatives, including technologies and sites, which meet PPLLC's purposes and needs and the basic requirements of TVA's electricity needs, are reasonably capable of being connected to TVA's transmission system, and otherwise fall within the reasonable range of alternatives to be evaluated in an EIS.

Scoping Process

Scoping, which is integral to the NEPA process, is a procedure that solicits public input to the EIS process to ensure that: (1) Issues are identified early and properly studied; (2) issues of little significance do not consume substantial time and effort; (3) the draft EIS is thorough and balanced; and (4) delays caused by an inadequate EIS are avoided. TVA's NEPA procedures require that the scoping process commence soon after a decision has been reached to prepare an EIS in order to provide an early and open process for determining the scope and for identifying the significant issues related to a proposed action. The scope of alternatives and issues to be addressed in the draft EIS will be determined, in part, from written comments submitted by mail or e-mail, and comments presented orally or in writing at public meetings. The preliminary identification in this notice of reasonable alternatives and environmental issues is not meant to be exhaustive or final.

The scoping process will include both interagency and public scoping. The public is invited to submit written comments or e-mail comments on the scope of this EIS no later than the date given under the **DATES** section of this notice.

TVA will conduct a public scoping meeting at the Pickwick Landing State Park Inn and Conference Center on March 5, 2002. At the meeting, TVA management and project staff will present overviews of the EIS process, PPLLC staff will present an overview of the proposed power plant project, and TVA will answer questions and solicit comments on the issues that the public would like addressed in the EIS. This meeting will be publicized through notices in local newspapers, TVA press releases, information on TVA's Web site at *http://www.tva.gov/environment/reports,* and meetings between TVA officials and local elected officials preceding the public meeting.

The federal agencies identified at this time for inclusion in the interagency scoping are the U.S. Environmental Protection Agency, U.S. Army Corps of Engineers (which has agreed to be a Cooperating Agency in preparation of the EIS), and the U.S. Fish and Wildlife Service. State agencies include the Tennessee Department of Economic and Community Development, Tennessee Department of Environment and Conservation, Tennessee Wildlife Resources Agency, and the Tennessee State Historic Preservation Officer. Regional and local agencies include the Southwest Tennessee Development District, Hardin County government, and the Hardin County Historian. Indian tribes include the Eastern Band of the Cherokee Indians, the United Keetoowah Band of the Cherokee Indians, the Cherokee Nation of Oklahoma, the Chickasaw Nation, the Muscogee (Creek) Nation of Oklahoma, the Poarch Band of Creek Indians, the Kialegee Tribal Town, the Alabama-Quassarte Tribal Town, the Thlopthlocco Tribal Town, and the Alabama-Coushatta Tribe. Other agencies, as appropriate and identified, will also be included.

After consideration of the scoping comments, TVA will establish alternatives and environmental issues to be addressed in the EIS. Following analysis of the environmental consequences of each alternative, TVA will prepare a draft EIS for public review and comment. Notice of availability of the draft EIS will be published by the Environmental Protection Agency in the **Federal Register**. Copies will be sent to public libraries, those requesting a copy, governmental agencies, and Indian Tribes, and a copy will be placed on TVA's Web site at *http://www.tva.gov/environment/reports.* TVA will solicit written comments on the draft EIS, and information about public meetings to comment on the draft EIS will be announced. TVA expects to release a draft EIS by October 2002 and a final EIS by January 2003.

Dated: February 11, 2002.

Kathryn J. Jackson,

Executive Vice President, River System Operations & Environment.

[FR Doc. 02–4052 Filed 2–19–02; 8:45 am]

BILLING CODE 8120–08–P

OFFICE OF THE UNITED STATES TRADE REPRESENTATIVE

Determinations Under the African Growth and Opportunity Act

AGENCY: Office of the United States Trade Representative.

ACTION: Notice.

SUMMARY: The United States Trade Representative has determined that Mozambique has adopted an effective visa system and related procedures to prevent unlawful transshipment and the use of counterfeit documents in connection with shipments of textile and apparel articles and has implemented and follows, or is making substantial progress toward implementing and following, the customs procedures required by the African Growth and Opportunity Act. Therefore, imports of eligible products from Mozambique qualify for the textile and apparel benefits provided under the AGOA.

DATES: February 6, 2002.

FOR FURTHER INFORMATION CONTACT: Chris Moore, Director for Africa Trade Policy, Office of the United States Trade Representative, (202) 395–9514.

SUPPLEMENTARY INFORMATION: The African Growth and Opportunity Act (Title I of the Trade and Development Act of 2000, Pub. L. 106–200) (AGOA) provides preferential tariff treatment for imports of certain textile and apparel products of beneficiary sub-Saharan African countries. The textile and apparel trade benefits under the AGOA are available to imports of eligible products from countries that the President designates as ''beneficiary sub-Saharan African countries,'' provided that these countries (1) have adopted an effective visa system and related procedures to prevent unlawful transshipment and the use of counterfeit documents, and (2) have implemented and follow, or are making substantial progress toward implementing and following, certain customs procedures that assist the Customs Service in verifying the origin of the products.

In Proclamation 7350 (Oct. 2, 2000), the President designated Mozambique as a ''beneficiary sub-Saharan African country.'' Proclamation 7350 delegated to the United States Trade Representative (USTR) the authority to determine whether designated countries have met the two requirements described above. The President directed the USTR to announce any such determinations in the **Federal Register** and to implement them through modifications of the Harmonized Tariff Schedule of the United States (HTS). Based on actions that Mozambique has taken, I have determined that Mozambique has satisfied these two requirements.

Accordingly, pursuant to the authority vested in the USTR by Proclamation 7350, U.S. note 7(a) to subchapter II of chapter 98 of the HTS and U.S. note 1 to subchapter XIX of chapter 98 of the HTS are each modified by inserting ''Mozambique'' in alphabetical sequence in the list of countries. The foregoing modifications to the HTS are effective with respect to articles entered, or withdrawn from warehouse, for consumption on or after the effective date of this notice. Importers claiming preferential tariff treatment under the AGOA for entries of textile and apparel articles should ensure that those entries meet the applicable visa requirements. *See Visa Requirements Under the African Growth and Opportunity Act*, 66 FR 7837 (2001).

Robert B. Zoellick,
United States Trade Representative.

[FR Doc. 02–4060 Filed 2–19–02; 8:45 am]

BILLING CODE 3190–01–M

DEPARTMENT OF TRANSPORTATION

Coast Guard

[USCG 2001–11106]

Information Collection Under Review by the Office of Management and Budget (OMB): 2115–0115, 2115–0078, 2115–0113, and 2115–0013

AGENCY: Coast Guard, DOT.

ACTION: Request for comments.

SUMMARY: In compliance with the Paperwork Reduction Act of 1995, this request for comments announces that the Coast Guard has forwarded four Information Collection Reports (ICRs) abstracted below to the Office of Information and Regulatory Affairs (OIRA) of the Office of Management and Budget (OMB) for review and comment. Our ICRs describe the information we seek to collect from the public. Review and comment by OIRA ensures that we impose only paperwork burdens commensurate with our performance of duties.

DATES: Please submit comments on or before March 22, 2002.

ADDRESSES: To make sure that your comments and related material do not enter the docket [USCG 2001–11106] more than once, please submit them by only one of the following means:

(1)(a) By mail to the Docket Management Facility, U.S. Department of Transportation, room PL–401, 400 Seventh Street SW., Washington, DC 20590–0001. (b) OIRA, 725 17th Street NW, Washington, DC 20503, to the attention of the Desk Officer for the Coast Guard. Caution: Because of recent delays in the delivery of mail, your comments may reach the Facility more quickly if you choose one of the other means described below.

(2)(a) By delivery to room PL–401 at the address given in paragraph (1)(a) above, between 9 a.m. and 5 p.m., Monday through Friday, except Federal holidays. The telephone number is 202–366–9329. (b) OIRA, at the address given in paragraph (1)(b) above, to the attention of the Desk Officer for the Coast Guard.

(3) By fax to (a) the Docket Management Facility at 202–493–2251 or (b) OIRA 202–395–7285, attention: Desk Officer for the Coast Guard.

(4)(a) Electronically through the Web site for the Docket Management System at *http://dms.dot.gov.* (b) OIRA does not have a Web site on which you can post your comments.

The Docket Management Facility maintains the public docket for this notice. Comments and material received from the public, as well as documents mentioned in this notice as being available in the docket, will become part of this docket and will be available for inspection or copying at room PL–401 (Plaza level), 400 Seventh Street SW., Washington, DC, between 9 a.m. and 5 p.m., Monday through Friday, except Federal holidays. You may also find this docket on the Internet at *http://dms.dot.gov.*

Copies of the complete ICRs are available for inspection and copying in public dockets. Copies are available in docket USCG 2001–11106 of the Docket Management Facility between 10 a.m. and 5 p.m., Monday through Friday, except Federal holidays; for inspection and printing on the Internet at *http://dms.dot.gov;* and for inspection from the Commandant (G–CIM–2), U.S. Coast Guard, room 6106, 2100 Second Street S.W., Washington, DC, between 10 a.m. and 4 p.m., Monday through Friday, except Federal holidays.

FOR FURTHER INFORMATION CONTACT: Barbara Davis, Office of Information Management, 202–267–2326, for questions on this document; Dorothy Beard, Chief, Documentary Services Division, U.S. Department of Transportation, 202–366–5149, for questions on the docket.

SUPPLEMENTARY INFORMATION:

Regulatory History

This request constitutes the 30-day notice required by OIRA. The Coast Guard has already published (66 FR 64336 (December 12, 2001)) the 60-day notice required by OIRA. That notice elicited no comments.

Request for Comments

The Coast Guard invites comments on the proposed collection of information to determine whether the collection is necessary for the proper performance of the functions of the Department. In particular, the Coast Guard would appreciate comments addressing: (1) The practical utility of the collection; (2) the accuracy of the Department's estimated burden of the collection; (3) ways to enhance the quality, utility, and clarity of the information that is the subject of the collection; and (4) ways to minimize the burden of collection on respondents, including the use of automated collection techniques or other forms of information technology.

Comments, to DMS or OIRA, must contain the OMB Control Number of the ICR addressed. Comments to DMS must contain the docket number of this request, USCG 2001–11106. Comments to OIRA are best assured of having their full effect if OIRA receives them 30 or fewer days after the publication of this request.

Information Collection Request

1. *Title:* Electrical Engineering—Title 46 CFR Subchapter J.
OMB Control Number: 2115–0115.
Type of Request: Extension of a currently approved collection.
Affected Public: Owners, operators, and builders of vessels.
Forms: This collection of information does not require the public to fill out Coast Guard forms, but does require industry to complete electrical engineering plans to meet the performance requirements on new-built vessels.
Abstract: We need the information sought here to ensure compliance with our rules on electrical engineering for the design and construction of U.S.-flag commercial vessels.
Annual Estimated Burden Hours: The estimated burden is 1,153 hours a year.

2. *Title:* Operations Manual and Amendments for Facilities Transferring Oil and Hazardous Materials in Bulk.
OMB Control Number: 2115–0078.
Type of Request: Extension of a currently approved collection.
Affected Public: Owners and operators of waterfront facilities.
Forms: This collection of information does not require the public to fill out Coast Guard forms, but does require a new facility that transfers oil and hazardous material to develop an operations manual for personnel to follow in the proper and safe procedures for dealing with any spills that occur during transfer.
Abstract: An operations manual is mandatory for waterfront facilities that will be transferring bulk oil or hazardous materials to or from vessels. It establishes procedures for personnel of the facility to follow when conducting the transfer and in the event of a spill.
Annual Estimated Burden Hours: The estimated burden is 27,369 hours a year.

3. *Title:* Self-propelled Vessels Carrying Liquefied Gas.
OMB Control Number: 2115–0113.
Type of Request: Extension of a currently approved collection.
Affected Public: Owners and operators of self-propelled vessels carrying liquefied gas.
Forms: CG–4355.
Abstract: We need the information sought here to ensure compliance with our rules for the design and operation of carriers of liquefied gas.
Annual Estimated Burden Hours: The estimated burden is 5,131 hours a year.

4. *Title:* Application and Permit to Handle Hazardous Materials.
OMB Control Number: 2115–0013.
Type of Request: Extension of a currently approved collection.
Affected Public: Shipping agents and terminal operators that handle hazardous materials.
Forms: CG–4260.
Abstract: The information sought here ensures the safe handling of explosives and other hazardous materials around ports and aboard vessels. Shipping agents and terminal operators who handle the above commodities must comply.
Annual Estimated Burden Hours: The estimated burden is 292 hours a year.

Dated: February 13, 2002.

N.S. Heiner,

Acting, Director of Information and Technology.

[FR Doc. 02–4083 Filed 2–19–02; 8:45 am]

BILLING CODE 4910–15–P

DEPARTMENT OF TRANSPORTATION

Coast Guard

[USCG–2002–11490]

Towing Safety Advisory Committee; Meetings

AGENCY: Coast Guard, DOT.

ACTION: Notice of meetings.

SUMMARY: The Towing Safety Advisory Committee (TSAC) and its working groups will meet as required to discuss various issues relating to shallow-draft inland and coastal waterway navigation and towing safety. All meetings will be open to the public.

DATES: TSAC will meet on Thursday, March 14, 2002, from 8 a.m. to 12:30 p.m. The working groups will meet on Wednesday, March 13, 2002, from 9 a.m. to 3:30 p.m. These meetings may close early if all business is finished. Written material and requests to make oral presentations should reach the Coast Guard on or before February 25, 2002. Requests to have a copy of your material distributed to each member of the Committee or working groups should reach the Coast Guard on or before February 25, 2002.

ADDRESSES: TSAC will meet in the Commission Room, Port of San Francisco, Pier One, Embarcadero, San Francisco, CA. The working groups will begin in the same room and may move to separate spaces designated at that time. Send written material and requests to make oral presentations to Mr. Gerald P. Miante, Commandant (G–MSO–1), U.S. Coast Guard Headquarters, 2100 Second Street SW., Washington, DC 20593–0001. This notice is available on the Internet at *http://dms.dot.gov.*

FOR FURTHER INFORMATION CONTACT: Mr. Gerald P. Miante, Assistant Executive Director, telephone 202–267–0229, or LCDR Lance Lindsay, telephone 202–267–0218, fax for both is 202–267–4570, or e-mail at: *gmiante@comdt.uscg.mil.*

SUPPLEMENTARY INFORMATION: Notice of these meetings is given under the Federal Advisory Committee Act, 5 U.S.C. App. 2.

Agenda of Committee Meeting

The agenda tentatively includes the following:

(1) Status Report of the Crew Alertness Working Group,

(2) Status Report of the Gulf Coast Mariners Association (GCMA) Report Working Group,

(3) Status Report Licensing Implementation Working Group,

(4) Status Report of the rulemaking on Fire-Suppression Systems and Voyage Planning for Towing Vessels, and

(5) Status Report of the Maritime Security Working Group.

(6) Committee consideration of a draft task statement from the Towing Vessel Regulatory Review Work Group.

Procedural

All meetings are open to the public. Please note that the meetings may close early if all business is finished. Members of the public may make oral presentations during the meetings. If you would like to make an oral presentation at a meeting, please notify the Assistant Executive Director no later than February 25, 2002. Written material for distribution at a meeting should reach the Coast Guard no later than February 25, 2002. If you would like a copy of your material distributed to each member of the committee or subcommittee in advance of a meeting, please submit 25 copies to the Assistant Executive Director no later than February 25, 2002.

Information on Services for Individuals With Disabilities

For information on facilities or services for individuals with disabilities or to request special assistance at the meetings, contact the Assistant Executive Director as soon as possible.

Dated: February 11, 2002.

Howard L. Hine,

Acting Director of Standards, Marine Safety and Environmental Protection.

[FR Doc. 02–4084 Filed 2–19–02; 8:45 am]

BILLING CODE 4910–15–P

DEPARTMENT OF THE TREASURY

Financial Crimes Enforcement Network; Agency Information Collection Activities; Proposed Collection; Comment Request; Designation of Exempt Person Form

AGENCY: Financial Crimes Enforcement Network (''FinCEN''), Treasury.

ACTION: Notice and request for comments.

SUMMARY: FinCEN, a bureau of the U.S. Department of the Treasury (''Treasury''), invites all interested parties to comment on its continuing collection of information through its ''Designation of Exempt Person'' form that is used by banks and other depository institutions to designate their eligible customers as exempt from the requirement to report transactions in currency over $10,000.

DATES: Written comments should be received on or before April 22, 2002.

ADDRESSES: Direct all written comments to: Office of Chief Counsel, Financial Crimes Enforcement Network, U.S. Department of the Treasury, P.O. Box 1618, Vienna, VA 22183–1618, *Attention:* PRA Comments—Designation of Exempt Person form. Comments also may be submitted by electronic mail to the following Internet address: ''regcomments@fincen.treas.gov'' with the caption in the body of the text, ''*Attention:* PRA Comments—Designation of Exempt Person form.''

FOR FURTHER INFORMATION CONTACT: Requests for additional information or for a copy of the form should be directed to Dawn Adams, Regulatory Programs Specialist, Office of Compliance and Regulatory Enforcement, (202) 354–6015, or Albert R. Zarate, Senior Regulatory Counsel, Office of Chief Counsel, FinCEN, (703) 905–3590.

SUPPLEMENTARY INFORMATION: Pursuant to the Paperwork Reduction Act of 1995, Public Law 104–13 (44 U.S.C. 3506(c)(2)(A)), FinCEN is soliciting comments on the collection of information described below.

Title: Designation of Exempt Person.

OMB Number: 1506–0012.

Form Number: TD F 90–22–53.

Abstract: The Bank Secrecy Act, Titles I and II of Public Law 91–508, as amended, codified at 12 U.S.C. 1829b, 12 U.S.C. 1951–1959, and 31 U.S.C. 5311–5331, authorizes the Secretary of the Treasury, among other things, to issue regulations requiring records and reports that are determined to have a high degree of usefulness in criminal, tax, and regulatory matters, or in the conduct of intelligence or counterintelligence activities, including analysis, to protect against international terrorism. The Bank Secrecy Act also authorizes the Secretary to require the establishment of counter-money laundering programs and compliance procedures. Regulations implementing Title II of the Bank Secrecy Act (codified at 31 U.S.C. 5311–5330) appear at 31 CFR Part 103. The authority of the Secretary to administer Title II of the Bank Secrecy Act has been delegated to the Director of FinCEN.

The reporting by financial institutions of transactions in currency in excess of $10,000 has long been a major component of the Treasury's implementation of the Bank Secrecy Act. The reporting requirement is imposed by 31 CFR 103.22, a rule issued under the broad authority granted to the Secretary of the Treasury by 31 U.S.C. 5313(a) to require reports of domestic coins and currency transactions.

The Money Laundering Suppression Act of 1994, Title IV of the Riegle Community Development and Regulatory Improvement Act (Public Law 103–325) amended 31 U.S.C. 5313. The statutory amendments mandate exemptions from currency transaction reporting in the case of customers that are other banks, certain governmental entities, or businesses for which reporting would serve little or no law enforcement purpose. The amendments also authorize Treasury to exempt certain other businesses.

On September 8, 1997, and September 31, 1998, Treasury issued final rules regarding these statutory amendments (62 FR 47141 and 63 FR 50147, respectively). The final rules reform and simplify the process by which banks may exempt eligible customers. The final rules, as further amended by 65 FR 46356, are set forth at 31 CFR 103.22(d).

Under the simplified exemption rules, a key requirement is a ''designation'' sent to the Treasury indicating that a customer will be treated by the bank as an exempt person, so that no further currency transaction reports will be filed on the customer's cash transactions exceeding $10,000. As part of the simplification process, Treasury previously issued a form specifically for making that designation.

The information collected on the form, Designation of Exempt Person, TD F 90–22.53, is required to exempt bank customers from currency transaction reporting. The information is used to help determine whether a bank has properly exempted its customers. The collection of information is mandatory.

Type of Review: Continuation of currently approved collection.

Affected Public: Business or other for-profit institutions.

Estimated Number of Respondents: 5,000.

Estimated Total Annual Responses: 180,000.

Estimated Total Annual Burden Hours: Reporting average of 10 minutes per response; recordkeeping average of 1 hour per response.

Request for Comments: Comments submitted in response to this notice will be summarized and/or included in the request for Office of Management and Budget approval. All comments will become a matter of public record. Comments are invited on: (a) Whether the collection of information is necessary for the proper performance of the agency, including whether the information shall have practical utility; (b) the accuracy of the agency's estimate of the burden collection of information; (c) ways to enhance quality, utility, and clarity of the information to be collected; (d) ways to minimize the burden of the collection of information on respondents, including through the use of automated collection techniques or other forms of information technology; and (e) estimates of capital or start-up costs and costs of operation, maintenance and purchase of services to provide information.

Dated: February 11, 2002.

James F. Sloan,

Director, Financial Crimes Enforcement Network.

[FR Doc. 02–4001 Filed 2–19–02; 8:45 am]

BILLING CODE 4810–02–P

DEPARTMENT OF THE TREASURY

Internal Revenue Service

Open Meeting of the Florida Citizen Advocacy Panel

ACTION: Notice.

SUMMARY: An open meeting of the Florida Citizen Advocacy Panel will be held in Sunrise, Florida.

DATES: The meeting will be held Saturday, February 23, 2002.

FOR FURTHER INFORMATION CONTACT: Nancy Ferree at 1–888–912–1227, or 954–423–7973.

SUPPLEMENTARY INFORMATION: Notice is hereby given pursuant to section

10(a)(2) of the Federal Advisory Committee Act, 5 U.S.C. App. (1988) that an open meeting of the Citizen Advocacy Panel will be held Saturday, February 23, 2002, from 9:00 a.m. to 4:00 p.m, at the Sunrise Hilton, 3003 N. University Drive, Sunrise, Florida 33322. The public is invited to make oral comments. Individual comments will be limited to 10 minutes. If you would like to have the CAP consider a written statement, please call 1–888–912–1227 or 954–423–7973, or write Nancy Ferree, CAP Office, 7771 W. Oakland Park Blvd. Rm. 225, Sunrise, FL 33351, or e-mail *firstcapsfl@mindspring.com.* Due to limited conference space, notification of intent to attend the meeting must be made with Nancy Ferree. Ms. Ferree can be reached at 1–888–912–1227 or 954–423–7973, or e-mail *firstcapsfl@mindspring.com.*

The agenda will include the following: Various IRS issue updates and reports by the CAP sub-groups.

Note: Last minute changes to the agenda are possible and could prevent effective advance notice.

Dated: February 12, 2002.

Cynthia Vanderpool,

Acting Director, CAP, Communication and Liasion.

[FR Doc. 02–4089 Filed 2–19–02; 8:45 am]

BILLING CODE 4830–01–P

DEPARTMENT OF THE TREASURY

Office of Thrift Supervision

[AC–1: OTS Nos. H–3825 and 00560]

Mt. Troy Savings Bank, FSB, Pittsburgh, Pennsylvania; Approval of Conversion Application

Notice is hereby given that on, February 12, 2002, the Director, Examination Policy, Office of Thrift Supervision (''OTS''), or her designee, acting pursuant to delegated authority, approved the application of Mt. Troy Savings Bank, FSB, Pittsburgh, Pennsylvania, to convert to the stock form of organization. Copies of the application are available for inspection by appointment (phone number: 202–906–5922 or e-mail: *Public.Info@OTS.Treas.gov)* at the Public Reading Room, OTS, 1700 G Street, NW., Washington, DC 20552, and the OTS Northeast Regional Office, 10 Exchange Place, 18th Floor, Jersey City, New Jersey 07302.

Dated: February 13, 2002.

By the Office of Thrift Supervision.

Nadine Y. Washington,

Corporate Secretary.

[FR Doc. 02–4017 Filed 2–19–02; 8:45 am]

BILLING CODE 6720–01–M

DEPARTMENT OF THE TREASURY

Office of Thrift Supervision

[AC–2: OTS Nos. H–3289 and 04726]

Willow Grove Bancorp, Inc., Pennsylvania; Approval of Conversion Application

Notice is hereby given that on, February 11, 2002, the Director, Examination Policy, Office of Thrift Supervision (''OTS''), or her designee, acting pursuant to delegated authority, approved the application of Willow Grove Bancorp, Inc., Maple Glen, Pennsylvania, to convert to the stock form of organization. Copies of the application are available for inspection by appointment (phone number: 202–906–5922 or e-mail: *Public.Info@OTS.Treas.gov*) at the Public Reading Room, OTS, 1700 G Street, NW, Washington, DC 20552, and the OTS Northeast Regional Office, 10 Exchange Place, 18th Floor, Jersey City, New Jersey 07302.

Dated: February 14, 2002.

By the Office of Thrift Supervision.

Nadine Y. Washington,

Corporate Secretary.

[FR Doc. 02–4092 Filed 2–19–02; 8:45 am]

BILLING CODE 6720–02–M

Federal Register

Wednesday,
February 20, 2002

Part II

Department of Health and Human Services

Health Resources and Services Administration

Lists of Designated Primary Medical Care, Mental Health, and Dental Health Professional Shortage Areas; Notice

DEPARTMENT OF HEALTH AND HUMAN SERVICES

Health Resources and Services Administration

Lists of Designated Primary Medical Care, Mental Health, and Dental Health Professional Shortage Areas

AGENCY: Health Resources and Services Administration, HHS.

ACTION: Notice.

SUMMARY: This notice provides lists of all areas, population groups, and facilities designated as primary medical care, mental health, and dental health professional shortage areas (HPSAs) as of May 23, 2001. HPSAs are designated or withdrawn by the Secretary of Health and Human Services (HHS) under the authority of section 332 of the Public Health Service (PHS) Act.

FOR FURTHER INFORMATION CONTACT: Requests for further information on the HPSA designations listed below and requests for additional designations, withdrawals, or reinstatement of a withdrawn designation should be submitted to Jerilyn A. Thornburg, R.N., M.P.H., Director, Division of Shortage Designation, Bureau of Health Professions, Health Resources and Services Administration, 4350 East-West Highway, Bethesda, Maryland 20814 (301–594–0816).

SUPPLEMENTARY INFORMATION:

1. Background

Section 332 of the PHS Act, 42 U.S.C. 254e, provides that the Secretary of HHS shall designate HPSAs based on criteria established by regulation. HPSAs are defined in section 332 to include (1) urban and rural geographic areas with shortages of health professionals, (2) population groups with such shortages, and (3) facilities with such shortages. Section 332 further requires that the Secretary annually publish a list of the designated geographic areas, population groups, and facilities. The list of HPSAs is to be reviewed at least annually and revised as necessary. The Health Resources and Services Administration's (HRSA) Bureau of Health Professions (BHPr) has the responsibility for designating and updating HPSAs.

Public or private nonprofit entities are eligible to apply for assignment of National Health Service Corps (NHSC) personnel to provide primary health services in or to these HPSAs. NHSC health professionals with a service obligation may serve only in federally designated HPSAs. Programs with clinical training sites located in HPSAs are eligible to receive priority for certain residency training program grants administered by BHPr.

Several programs administered by the Center for Medicare and Medicaid Services (formerly the Health Care Financing Administration) also use the HPSA designation. Certain qualified providers in HPSAs are eligible for increased levels of Medicare and Medicaid reimbursement.

2. Development of the Designation and Withdrawal Lists

Criteria for designating HPSAs were published as final regulations (42 CFR part 5) in 1980. Criteria were then defined for each of seven health professional types (primary medical care, dental, psychiatric, vision care, podiatric, pharmacy, and veterinary care). The criteria for correctional facility HPSAs were revised at 54 FR 8738 in 1989, and the criteria for psychiatric HPSAs were expanded to mental health HPSAs at 57 FR 2477 in 1992. The currently-funded PHS programs which use the HPSA designations involve only the primary medical care, mental health, or dental HPSAs.

Individual requests for designation or withdrawal of a particular area, population group, or a facility as a HPSA are received and reviewed continuously by BHPr. The review process includes routine submission of such requests to the appropriate State Health Planning and Development Agency (SHPDA) and/or a unit of the State Health Department, the Governor, and other interested organizations and individuals for their comments and recommendations. Requests regarding primary medical care and mental health HPSAs are also submitted to the appropriate State medical society for comment, and dental HPSA requests are submitted to the appropriate State dental society.

Annually, lists of designated HPSAs are provided to all SHPDAs and/or State health departments, State medical and dental societies and others, together with a request to review and update the data on which the designations are based. Emphasis is placed on updating those designations which are more than three years old or where significant changes relevant to the designation criteria have occurred.

Recommendations for possible additions, continuations, revisions or withdrawals from the HPSA list are reviewed by BHPr, and the review findings are provided by letter to the agency or individual requesting action or providing data, with copies to other interested organizations and individuals. These letters constitute the official notice of designation as a HPSA, rejection of recommendations for HPSA designation, revision of a HPSA designation, and/or advance notice of pending withdrawals from the HPSA list. Designations (or revisions of designations) are effective as of the date of the notification letter from BHPr. Proposed withdrawals become effective only after interested parties in the area affected have been afforded the opportunity to submit additional information to BHPr in support of its continued or revised designation. If no new data are submitted or if the BHPr review confirms the proposed withdrawal, the withdrawal becomes effective upon publication in the **Federal Register** of a list of HPSAs that does not include the HPSA for which withdrawal has been proposed.

This notice contains three lists of designated HPSAs. Each list (primary medical care, mental health, and dental) includes all those areas, population groups, and facilities which were designated HPSAs as of May 23, 2001. This notice incorporates the most recent annual review of designated HPSAs and supersedes the HPSA list published in the **Federal Register** on September 15, 2000. The lists below include 2,781 primary medical care, 798 mental health, and 1,580 dental HPSAs.

3. Format of Lists

Each list of designated HPSAs (primary medical care, mental health, and dental) is arranged by State. Within each State, the list is first presented by county. If only a portion (or portions) of a county is (are) designated, or if the county is part of a larger designated service area, or if a population group residing in the county or a facility located in the county has been designated, the name of the service area, population group, or facility involved is listed under the county name. Counties which have a geographic HPSA designation in addition to one or more facility designations within the county are indicated by a ''(g)'' following the county name.

Following the county listing, a list of any designated service areas is presented, identifying their component parts—counties, towns, townships, census tracts (CTs), minor civil divisions (MCDs), census county divisions (CCDs), block numbering areas (BNAs), or magisterial districts, as defined by the Bureau of the Census. Those counties (or parts of counties included in service areas) which are classified as nonmetropolitan are indicated by an asterisk (*). ''Nonmetropolitan'' refers to those

counties not included in the definition of metropolitan areas established by the Office of Management and Budget (OMB Bulletin 99–04 dated June 30, 1999).

Following the service area listing, a list of designated population groups (if any) is presented identifying each group and the geographic area wherein it resides. Following the population group listing, a list by name and location of any separately designated facilities (including prisons, correctional institutions, health centers, or hospitals) is presented.

In addition to the specific listings included in this notice, all Indian tribes which meet the definition of such tribes in the Indian Health Care Improvement Act of 1976, 25 U.S.C. 1603(d), are automatically designated as population groups with primary medical care and dental health professional shortages.

4. Future Updates of Lists of Designated HPSAs

The lists of HPSAs below consist of all those which were designated as of May 23, 2001. It should be noted that additional HPSAs may have been designated by letter since May 23. The appropriate agencies and individuals have been or will be notified of these actions by letter.

Any designated HPSA listed below is subject to withdrawal from designation if new information received and confirmed by HPSAs indicates that the relevant data for the area involved have significantly changed since its designation or that incorrect or incomplete data were used in making the original designation.

All requests for new designations, updates, or withdrawals should be based on the relevant criteria in regulations published at 42 CFR part 5 (1997).

(Authority: 42 U.S.C. 254e)

5. Electronic access address

Information on HPSAs is also available at http://www.bphc.hrsa.gov/dsd.

Dated: January 31, 2002.

Elizabeth M. Duke,

Acting Administrator.

PRIMARY MEDICAL CARE: Alabama
County Listing

County Name

Autauga
  Service Area: Autaugaville
  Population Group: Low Inc—Montgomery/Prattville
Baldwin
  Service Area: Atmore/Century (AL/FL)
  Population Group: Low Inc—Central/South Baldwin
*Barbour
  Service Area: Clayton
  Population Group: Low Inc—Eufaula
*Bibb
Blount
*Bullock
  Service Area: Bullock-Macon
*Butlerc
  Service Area: Butler/South Lowndes
*Chambers
  Service Area: La Fayette
  Population Group: Low Inc—Valley
*Cherokee
*Chilton
*Choctaw
*Clarke
  Population Group: Low Inc—Clarke Co
*Clay
*Cleburne
*Coffee
  Population Group: Low Inc—Coffee Co
Colbert
  Service Area: Cherokee
*Conecuh
*Coosa
*Covington
  Service Area: South Covington
  Population Group: Low Inc—North Covington
*Crenshaw
*Cullman
  Population Group: Low Inc—Cullman Co
Dale
*De Kalb
  Population Group: Low Inc—Dekalb
Elmore
*Escambia
  Service Area: Atmore/Century (AL/FL)
Etowah
  Population Group: Low Inc—Etowah Co
*Fayette
  Population Group: Low Inc—Fayette Co
*Franklin
  Population Group: Low Inc—Franklin
*Geneva
*Greene
  Service Area: Greene-Hale
*Hale
  Service Area: Greene-Hale
*Henry
*Jackson
  Population Group: Low Inc—Jackson Co
Jefferson
  Population Group: Low Inc—Central Birmingham
*Lamar
Lauderdale
  Population Group: Low Inc—Lauderdale Co
Lawrence
*Lee
  Population Group: Low Inc—Lee County
Limestone
  Population Group: Low Inc—Limestone Co
*Lowndes
  Service Area: Butler/South Lowndes
  Service Area: North Lowndes
*Macon
  Service Area: Bullock-Macon
Madison
  Population Group: Low Inc—C Huntsville
*Marion
  Population Group: Low Inc—Marion Co
*Marshall
  Population Group: Low Inc—Marshall Co
Mobile
  Population Group: Low Inc—Mobile County
*Monroe
  Service Area: Atmore/Century (AL/FL)
  Population Group: Low Inc—Monroeville
Montgomery
  Population Group: Low Inc—Montgomery/Prattville
Morgan
  Population Group: Low Inc—Morgan Co
*Perry
*Pickens
*Randolph
Russell
  Population Group: Low Inc—Russell
Shelby
St Clair
*Sumter
  Population Group: Low Inc—Sumter
*Talladega
  Population Group: Low Inc—Talladega Co
  Facility: FCI Talladega
*Tallapoosa
  Service Area: Camp Hill
Tuscaloosa
  Population Group: Low Inc—Tuscaloosa Co
*Walker
  Population Group: Low Inc—Walker Co
*Washington
*Wilcox
*Winston

PRIMARY MEDICAL CARE: Alabama
Service Area Listing

Service Area Name

Atmore/Century (AL/FL)
  County—Baldwin
    Parts:
      C.T. 101
  County—Escambia
    Parts:
      C.T. 9703–9707
  County—Monroe
    Parts:
      C.T. 9862
Autaugaville
  County—Autauga
    Parts:
      Autaugaville Division
      Billingsley Division
      Marbury Division
Bullock-Macon
  County—Bullock
  County—Macon
Butler/South Lowndes
  County—Butler
  County—Lowndes
    Parts:
      Braggs-Prairie Hill Division
      Fort Deposit Division
Camp Hill
  County—Tallapoosa
    Parts:
      Camp Hill Division
      Dadeville Division
      Tallassee Division
Cherokee
  County—Colbert

PRIMARY MEDICAL CARE: Alabama
Service Area Listing

Service Area Name

Parts:
Cherokee Division
Clayton
County—Barbour
Parts:
Clayton Division
Clio Division
Louisville Division
Greene-Hale
County—Greene
County—Hale
La Fayette
County—Chambers
Parts:
C.T. 9537–9538
C.T. 9540–9541
North Lowndes
County—Lowndes
Parts:
Benton-Collirene Division
Hayneville Division
Lowndesboro Division
South Covington
County—Covington
Parts:
Falco Division
Florala Division

PRIMARY MEDICAL CARE: Alabama
Population Group Listing

Population Group

Low Inc—C Huntsville
County—Madison
Parts:
Gurley CCD
Hazel Green CCD
Huntsville CCD
Madison Crossroads CCD
New Hope CCD
New Market CCD
Low Inc—Central Birmingham
County—Jefferson
Parts:
C.T. 3–5
C.T. 7–8
C.T. 11–12
C.T. 14–16
C.T. 19.02
C.T. 22
C.T. 23.03–23.04
C.T. 24
C.T. 27
C.T. 29
C.T. 30.01–30.02
C.T. 31–34
C.T. 39–40
C.T. 42
C.T. 45
C.T. 51.01
C.T. 55
Low Inc—Central/South Baldwin
County—Baldwin
Parts:
C.T. 102–106
C.T. 107.01–107.03
C.T. 108
C.T. 109.01–109.02
C.T. 110–111
C.T. 112.01–112.02
C.T. 113
C.T. 114.01–114.02

PRIMARY MEDICAL CARE: Alabama
Population Group Listing

Population Group

C.T. 115–116
Low Inc—Clarke Co
County—Clarke
Parts:
Low Income
Low Inc—Coffee Co
County—Coffee
Low Inc—Cullman Co
County—Cullman
Parts:
Low Income
Low Inc—Dekalb
County—De Kalb
Parts:
Low Income
Low Inc—Etowah Co
County—Etowah
Parts:
Low Income
Low Inc—Eufaula
County—Barbour
Parts:
C.T. 9501
C.T. 9505–9509
Low Inc—Fayette Co
County—Fayette
Parts:
Low Income
Low Inc—Franklin
County—Franklin
Parts:
Low Income
Low Inc—Jackson Co
County—Jackson
Parts:
Low Income
Low Inc—Lauderdale Co
County—Lauderdale
Parts:
Low Income
Low Inc—Lee County
County—Lee
Parts:
Low Income
Low Inc—Limestone Co
County—Limestone
Parts:
Low Income
Low Inc—Marion Co
County—Marion
Parts:
Low Income
Low Inc—Marshall Co
County—Marshall
Parts:
Low Income
Low Inc—Mobile County
County—Mobile
Parts:
Low Income
Low Inc—Monroeville
County—Monroe
Parts:
Beatrice CCD
Frisco City CCD
Monroeville CCD
Peterman CCD
Vredenburgh CCD
Low Inc—Montgomery/Prattville
County—Autauga
Parts:
C.T. 201–208

PRIMARY MEDICAL CARE: Alabama
Population Group Listing

Population Group

County—Montgomery
Parts:
Low Income
Low Inc—Morgan Co
County—Morgan
Parts:
Low Income
Low Inc—North Covington
County—Covington
Parts:
Andalusia Division
Opp Division
Rosehill-Gantt Division
Low Inc—Russell
County—Russell
Parts:
Low Income
Low Inc—Sumter
County—Sumter
Parts:
Low Income
Low Inc—Talladega Co
County—Talladega
Parts:
Low Income
Low Inc—Tuscaloosa Co
County—Tuscaloosa
Parts:
Low Income
Low Inc—Valley
County—Chambers
Parts:
Lanett CCD
Langdale CCD
Low Inc—Walker Co
County—Walker
Parts:
Low Inc—Walker

PRIMARY MEDICAL CARE: Alabama
Facility Listing

Facility Name

FCI Talladega
County—Talladega

PRIMARY MEDICAL CARE: Alaska
Census Area Listing

Census Area Name

*Aleutians East Borough
*Aleutians West Borough
Anchorage Borough
Population Group: Low Inc—N. Anchorage City
*Bethel Area
*Bristol Bay Borough
*Denali Borough
*Fairbanks North Star Boro
Population Group: Low Inc—Fairbanks North Star Boro
*Lake And Peninsula Borough
*Matanuska-Susitna Borough
Service Area: Talkeetna/Trapper Creek
*Nome Area
Service Area: Norton Sound
*North Slope Borough
*Northwest Arctic Borough
*Prince Of Wales-Outer Ket
*Skagway-Hoonah-Angoon Borough
*Southeast Fairbanks
*Wade Hampton Borough

PRIMARY MEDICAL CARE: Alaska
Census Area Listing

Census Area Name

*Yakutat Borough
*Yukon-Koyukuk

PRIMARY MEDICAL CARE: Alaska
Service Area Listing

Service Area Name

Norton Sound
  Census Area—Nome Area
    Parts:
      C.T. 9510
Talkeetna/Trapper Creek
  Census Area—Matanuska-Susitna Borough
    Parts:
      C.T. 9743–9745

PRIMARY MEDICAL CARE: Alaska
Population Group Listing

Population Group

Low Inc—Fairbanks North Star Boro 4
  Census Area—Fairbanks North Star Boro
    Parts:
      Low Income
Low Inc—N. Anchorage City
  Census Area—Anchorage Borough
    Parts:
      C.T. 6
      C.T. 7.01–7.03
      C.T. 8.01–8.02
      C.T. 9.01–9.02
      C.T. 10–11
      C.T. 14–16
      C.T. 19–21
      C.T. 22.02

PRIMARY MEDICAL CARE: Arizona
County Listing

County Name

*Apache
  Service Area: Ganado
  Service Area: Sanders
  Service Area: Tsaile
  Population Group: Low Inc—St Johns/Springerville
*Cochise
  Service Area: Elfrida
  Service Area: Tombstone
  Population Group: Low Inc—Bowie/Wilcox
  Population Group: Low Inc—Douglas
  Population Group: Low Inc—Bisbee
*Coconino
  Service Area: Grand Canyon Village
  Service Area: Kanab/Fredonia (UT/AZ)
  Service Area: Page/Tuba City
*Gila
  Service Area: Young
*Greenlee
  Population Group: Low Inc—Greenlee
*La Paz
Maricopa
  Service Area: Gila Bend
  Service Area: Guadalupe
  Service Area: Wickenburg
  Population Group: Low Inc—Avondale/Tolleson
  Population Group: Low Inc—South Mountain
  Population Group: Low Inc—South Central Phoenix

PRIMARY MEDICAL CARE: Arizona
County Listing

County Name

  Population Group: Low Inc/MFW—Buckeye
  Population Group: Low Inc/MFW—El Mirage
  Facility: FCI Phoenix
  Facility: Maricopa Co Jails
Mohave
  Service Area: Dolan Springs
  Service Area: Mohave North
  Service Area: Needles/Topock (CA/AZ)
*Navajo
  Service Area: Heber/Overgaard
  Service Area: Hopi
  Population Group: Low Inc—Holbrook
  Population Group: Low Inc—Winslow
Pima
  Service Area: Arivaca
  Service Area: Continental
  Population Group: Low Inc—Ajo
  Population Group: Low Inc—Marana
  Population Group: Low Inc—South Tucson
  Facility: Child. Rehab. Cl—PC Clinic
  Facility: FCI Tucson
Pinal
  Service Area: San Pedro Valley
  Population Group: Low Inc—Superior
  Population Group: Low Inc/MFW—Central/West Pinal
  Facility: INS Med Fac—Florence
*Santa Cruz
*Yavapai
  Service Area: Ash Fork
  Service Area: Cordes Junction
  Service Area: Yavapai—South
Yuma
  Service Area: Somerton
  Service Area: Wellton/Mohawk

PRIMARY MEDICAL CARE: Arizona
Service Area Listing

Service Area Name

Arivaca
  County—Pima
    Parts:
      C.T. 43.05
Ash Fork
  County—Yavapai
    Parts:
      C.T. 1
Continental
  County—Pima
    Parts:
      C.T. 41.02
Cordes Junction
  County—Yavapai
    Parts:
      C.T. 15
Dolan Springs
  County—Mohave
    Parts:
      C.T. 9502
      C.T. 9504–9505
Elfrida
  County—Cochise
    Parts:
      C.T. 5
Ganado
  County—Apache
    Parts:
      C.T. 9776–9778
Gila Bend
  County—Maricopa

PRIMARY MEDICAL CARE: Arizona
Service Area Listing

Service Area Name

    Parts:
      C.T. 7233
Grand Canyon Village
  County—Coconino
    Parts:
      C.T. 17–19
Guadalupe
  County—Maricopa
    Parts:
      C.T. 3200.02
Heber/Overgaard
  County—Navajo
    Parts:
      C.T. 9607
Hopi
  County—Navajo
    Parts:
      C.T. 9650–9653
      C.T. 9674
      C.T. 9676
Kanab/Fredonia (UT/AZ)
  County—Coconino
    Parts:
      Kaibab Division
Mohave North
  County—Mohave
    Parts:
      Mohave North Division
Needles/Topock (CA/AZ)
  County—Mohave
    Parts:
      C.T. 9521
Page/Tuba City
  County—Coconino
    Parts:
      C.T. 21–25
San Pedro Valley
  County—Pinal
    Parts:
      San Manuel Division
Sanders
  County—Apache
    Parts:
      C.T. 9701
Somerton
  County—Yuma
    Parts:
      C.T. 114–116
Tombstone
  County—Cochise
    Parts:
      C.T. 4
Tsaile
  County—Apache
    Parts:
      C.T. 9772–9775
Wellton/Mohawk
  County—Yuma
    Parts:
      Wellton Division
Wickenburg
  County—Maricopa
    Parts:
      C.T. 405.02
      C.T. 405.09
Yavapai—South
  County—Yavapai
    Parts:
      C.T. 14
Young
  County—Gila

PRIMARY MEDICAL CARE: Arizona
Service Area Listing

Service Area Name

Parts:
C.T. 9806–9807

PRIMARY MEDICAL CARE: Arizona
Population Group Listing

Population Group

Low Inc—Ajo 2
County—Pima
Parts:
C.T. 49–50
Low Inc—Avondale/Tolleson
County—Maricopa
Parts:
C.T. 610.03–610.05
C.T. 612–614
C.T. 821
C.T. 822.01–822.02
Low Inc—Bisbee
County—Cochise
Parts:
C.T. 10–12
C.T. 19–21
Low Inc—Bowie/Wilcox
County—Cochise
Parts:
C.T. 1–2
Low Inc—Douglas
County—Cochise
Parts:
Douglas Division
Low Inc—Greenlee
County—Greenlee
Parts:
Low Income
Low Inc—Holbrook
County—Navajo
Parts:
C.T. 9601–9603
Low Inc—Marana
County—Pima
Parts:
C.T. 44.08–44.09
Low Inc—South Central Phoenix
County—Maricopa
Parts:
C.T. 1115–1124
C.T. 1126–1151
Low Inc—South Mountain
County—Maricopa
Parts:
C.T. 1152–1161
C.T. 1162.02–1162.04
C.T. 1163–1165
C.T. 1166.01–1166.02
C.T. 1167.02–1167.04
Low Inc—South Tucson
County—Pima
Parts:
C.T. 1–12
C.T. 13.01–13.02
C.T. 14
C.T. 20–24
C.T. 25.01–25.02
C.T. 37.01–37.03
C.T. 38–39
C.T. 41.03–41.04
C.T. 43.01
C.T. 43.09
Low Inc—St Johns/Springerville
County—Apache
Parts:

PRIMARY MEDICAL CARE: Arizona
Population Group Listing

Population Group

C.T. 9702–9705
Low Inc—Superior
County—Pinal
Parts:
Census Tract 2.00
Census Tract 4.00
Low Inc—Winslow
County—Navajo
Parts:
C.T. 9604–9606
Low Inc/MFW—Buckeye
County—Maricopa
Parts:
C.T. 506–507
Low Inc/MFW—Central/West Pinal
County—Pinal
Parts:
C.T. 8–17
C.T. 19–21
Low Inc/MFW—El Mirage
County—Maricopa
Parts:
C.T. 608–609
C.T. 610.06–610.08

PRIMARY MEDICAL CARE: Arizona
Facility Listing

Facility Name

Child. Rehab. Cl—PC Clinic 1
County—Pima
FCI Phoenix
County—Maricopa
FCI Tucson
County—Pima
INS Med Fac—Florence
County—Pinal
Maricopa Co Jails
County—Maricopa

PRIMARY MEDICAL CARE: Arkansas
County Listing

County Name

*Ashley
Service Area: Portland/Wilmot
*Boone
Service Area: Lead Hill
*Bradley
Service Area: Hermitage
*Calhoun
*Chicot
Population Group: Low Inc—Dermott/Mcgehee
Population Group: Low Inc—Eudora/Lake Village
Facility: Cummins Correctional Unit
Facility: Delta Correctional Unit
*Clay
*Cleburne
Population Group: Low Inc—Cleburne
*Cleveland
Crawford
Service Area: Mountainburg
*Cross
*Dallas
Service Area: Bearden
Service Area: Carthage
Service Area: Sparkman
*Desha
Service Area: Snow Lake
Population Group: Low Inc—Dermott/Mcgehee

PRIMARY MEDICAL CARE: Arkansas
County Listing

County Name

*Drew
Population Group: Low Inc—Dermott/Mcgehee
Faulkner
Service Area: California
*Fulton
Service Area: Mammoth Spring
*Grant
*Howard
Service Area: Umpire
Jefferson
Service Area: Altheimer
Service Area: Central Pine Bluff
Service Area: North Pine Bluff
Service Area: Redfield
Service Area: Richland
*Johnson
Service Area: Oark
*Lafayette
*Lawrence
*Lincoln
*Logan
Lonoke
*Madison
*Marion
Service Area: Lead Hill
*Monroe
*Montgomery
*Nevada
*Newton
*Ouachita
Service Area: Bearden
Service Area: Reader
Service Area: Stephens
*Perry
*Phillips
*Poinsett
Service Area: Harrisburg
Population Group: Low Inc—Marked Tree
*Polk
Service Area: Grannis/Wickes
*Pope
Service Area: Hector
*Prairie
Pulaski
Service Area: College Station
Service Area: East Little Rock
*Randolph
*Scott
*Searcy
*St Francis
*Stone
*Union
Service Area: Strong
*Van Buren
Washington
Service Area: West Washington
*Woodruff
*Yell
Service Area: Havana

PRIMARY MEDICAL CARE: Arkansas
Service Area Listing

Service Area Name

Altheimer
County—Jefferson
Parts:
C.T. 1.85
C.T. 7
Bearden
County—Dallas

PRIMARY MEDICAL CARE: Arkansas
Service Area Listing

Service Area Name

Parts:
Holly Springs Township
County—Ouachita
Parts:
Carroll Township
Cleveland Township
Freeo Township
Union Township
Valley Township
California
County—Faulkner
Parts:
Benton Township
California Township
Enola Township
Matthews Township
Mount Vernon Township
Mountain Township
Walker Township
Carthage
County—Dallas
Parts:
Chester Township
Smith Township
Willow Township
Central Pine Bluff
County—Jefferson
Parts:
C.T. 10–13
C.T. 14.02
C.T. 16–17
College Station
County—Pulaski
Parts:
C.T. 40.01
C.T. 40.03
C.T. 40.05
East Little Rock
County—Pulaski
Parts:
C.T. 2
C.T. 4–5
Grannis/Wickes
County—Polk
Parts:
Ozark Township
White Township
Harrisburg
County—Poinsett
Parts:
Bolivar Township
Owen Township
Scott Township
Havana
County—Yell
Parts:
Bluffton Township
Briggsville Township
Crawford Township
Dutch Creek Township
Gravelly Hill Township
Herring Township
Ions Creek Township
Richland Township
Riley Township
Waveland Township
Hector
County—Pope
Parts:
Center Township
Freeman Township
Griffin Township

PRIMARY MEDICAL CARE: Arkansas
Service Area Listing

Service Area Name

Jackson Township
Liberty Township
Martin Township
Phoenix Township
Smyrna Township
Hermitage
County—Bradley
Parts:
Eagle Township
Marion Township
Ouachita Township
Palestine Township
River Township
Sumpter Township
Washington Township
Lead Hill
County—Boone
Parts:
Sugar Loaf Township
County—Marion
Parts:
Crockett Township
Franklin Township
Keesee Township
Sugarloaf Township
Mammoth Spring
County—Fulton
Parts:
Afton Township
Mammoth Spring Township
Myatt Township
Wilson Township
Mountainburg
County—Crawford
Parts:
Bidville Township
Chester Township
Locke Township
Mountainburg Township
Porter Township
Upper Township
Whitley Township
Winfrey Township
North Pine Bluff
County—Jefferson
Parts:
C.T. 5.02
C.T. 6
C.T. 6.99
Oark
County—Johnson
Parts:
Batson Township
Dickerson Township
Hill Township
Low Gap Township
Mulberry Township
Portland/Wilmot
County—Ashley
Parts:
Banner Township
Bayou Township
Bearhouse Township
Beech Creek Township
De Bastrop Township
Montrose Township
Portland Township
Prairie Township
Union Township
Wilmot Township
Reader
County—Ouachita

PRIMARY MEDICAL CARE: Arkansas
Service Area Listing

Service Area Name

Parts:
Behestian Township
Red Hill Township
Redfield
County—Jefferson
Parts:
Barraque Township
Bolivar Township
Jefferson Township
Pastoria Township
Richland
County—Jefferson
Parts:
C.T. 8
Snow Lake
County—Desha
Parts:
Mississippi Township
Sparkman
County—Dallas
Parts:
Manchester Township
Nix Township
Owen Township
Stephens
County—Ouachita
Parts:
Jefferson Township
Liberty Township
Smackover Township
Strong
County—Union
Parts:
Harrison Township
Lapile Township
Umpire
County—Howard
Parts:
Burg Township
Clay Township
Duckett Township
Mountain Township
Umpire Township
West Washington
County—Washington
Parts:
District No. 10 Township
District No. 11 Township

PRIMARY MEDICAL CARE: Arkansas
Population Group Listing

Population Group

Low Inc—Cleburne
County—Cleburne
Parts:
Low Income
Low Inc—Dermott/Mcgehee
County—Chicot
Parts:
Bowie Twp
County—Desha
Parts:
Bowie Twp
Clayton Twp
Franklin Twp
Halley Twp
Richland Twp
County—Drew
Parts:
Bartholomew Twp
Collins Twp

PRIMARY MEDICAL CARE: Arkansas
Population Group Listing

Population Group

Franklin Twp
Low Inc—Eudora/Lake Village
County—Chicot
Parts:
Carlton Twp
Planters Twp
Low Inc—Marked Tree
County—Poinsett
Parts:
Greenwood Twp
Little River Twp
Tyronza Twp

PRIMARY MEDICAL CARE: Arkansas
Facility Listing

Facility Name

Cummins Correctional Unit
County—Chicot
Delta Correctional Unit
County—Chicot

PRIMARY MEDICAL CARE: California
County Listing

County Name

Alameda
Service Area: Oakland South (MSSA 2d)
Butte
Service Area: Feather Falls (MSSA 11)
Population Group: Low Inc—Biggs/Gridley
*Calaveras
Population Group: Low Inc—West Point/Wilseyville
Population Group: Low Inc—San Andreas (MSSA 13)
Population Group: Low Inc—Angels (MSSA 12)
*Colusa
Contra Costa
Population Group: Low Inc—Antioch N./Pittsburg N.(MSSA18d)
*Del Norte
Population Group: Low Inc—Del Norte Co (MSSA 19)
El Dorado
Service Area: N. El Dorado Co
Service Area: Pollock Pines (MSSA 23.2)
Fresno
Service Area: Kerman (MSSA 29)
Service Area: Mendota (MSSA 25)
Service Area: San Joaquin-Tranquility (MSSA 26)
Service Area: Selma (MSSA 33)
Population Group: Low Inc—Edison/Easton
Population Group: Low Inc—Reedley/Parlier/Orange
Facility: Kingsburg Hosp-Pc Clinic (MSSA 33)
Facility: Valley Medical Center
*Glenn
Population Group: Low Inc—Willows (MSSA 37)
*Humboldt
Service Area: Ferndale (MSSA 41)
Service Area: Garberville (MSSA 44)
Service Area: Rio Dell/Scotia (MSSA 43)
Service Area: Willow Creek (MSSA 38)
*Imperial
Service Area: Brawley/Calipatria (MSSA 50/51)
Service Area: Calexico (MSSA 49)

PRIMARY MEDICAL CARE: California
County Listing

County Name

Service Area: East Imperial (MSSA 47)
Service Area: El Centro (MSSA 48)
Population Group: Low Inc—W. Imperial (MSSA 52)
Facility: INS Med Fac—El Centro
*Inyo
Service Area: Lone Pine
Population Group: Low Inc—Bishop (MSSA 53)
Kern
Service Area: Arvin/Lamont (MSSA 61)
Service Area: Buttonwillow (MSSA 59)
Service Area: Frazier Park (MSSA 57.1)
Service Area: SE Kern (MSSA 65)
Service Area: Taft (MSSA 57.2)
Service Area: Tehachapi (MSSA 62)
Service Area: Wasco/Shafter (MSSA 58)
Population Group: Low Inc—Lake Isabella (MSSA 63)
Population Group: Low Inc—E Bakersfield (MSSA 66b)
Population Group: Low Inc/MFW—Delano/Mcfarland (MSSA 60)
*Kings
Service Area: Corcoran (MSSA 68)
Population Group: Low Inc—Hanford/Lemoore (MSSA 69.2)
*Lake
Population Group: Low Inc/MFW—Lakeport (MSSA 70)
*Lassen
Service Area: Big Valley
Population Group: Low Inc—Susanville
Los Angeles
Service Area: El Monte (MSSA 78.2oo)
Service Area: Huntington Park (MSSA 78.2ccc)
Service Area: Santa Catalina Island (MSSA 78.1)
Population Group: Low Inc—S. Central Ne (MSSA 78.2ggg)
Population Group: Low Inc—Exposition Pk (MSSA 78.2l)
Population Group: Low Inc—Van Nuys Central (MSSA 78.2cc)
Population Group: Low Inc—Pico Rivera S (MSSA 78.2ww)
Population Group: Low Inc—E Los Angeles (MSSA 78.2d)
Population Group: Low Inc—North Hollywood (MSSA 78.2bb)
Population Group: Low Inc—Bell (MSSA 78.2ddd)
Population Group: Low Inc—E San Pedro/Long Beach (78.2p)
Population Group: Low Inc—Venice/South Santa Monica
Population Group: Low Inc—Highland Park (78.2i)
Population Group: Low Inc—Bell Garden(MSSA 78.2c)
Facility: FCI Terminal Island
Facility: Harbor-UCLa Med Ctr Ambulatory Clinics
Facility: INS Med Fac—San Pedro
Facility: Long Beach Comprehensive Hlth Ctr
Facility: Los Angeles. Mission Comm. Clinic
Facility: UHP Compton Medical Center
Facility: Watts Health Center (MSSA 78.2aaa)

PRIMARY MEDICAL CARE: California
County Listing

County Name

Madera
Service Area: Chowchilla
Service Area: Madera West/Southwest (MSSA 80)
Facility: Family Health Care Clinic
Marin
Service Area: Bolinas/Stinson Beach
*Mariposa
Service Area: Mariposa/Coulterville
*Mendocino
Service Area: Boonville/Navarro/Philo/Yorkville
Service Area: Covelo
Facility: Redwood Coast Med Srvcs
Merced
Population Group: Low Inc/MFW—Dos Palos/Los Banos
*Modoc
Service Area: Big Valley
Service Area: Surprise Valley
Population Group: Low Inc—Alturas Div (MSSA 98)
Monterey
Service Area: Gonzales/Greenfield/Soledad
Service Area: King City
Population Group: Low Inc—Pajaro (MSSA 184.2)
Facility: Natividad Prof Plaza-Alvin Drive
Facility: Natividad Family Hlth-Blanco Circle
Orange
Population Group: Low Inc—C. Santa Ana (MSSA 116b)
Placer
Service Area: Colfax (MSSA 118.1)
Service Area: Foresthill/Back Country
Facility: Placer Co Medical Clinic
Riverside
Population Group: Low Inc—Palm Desert (MSSA 129.1a)
*San Benito
Service Area: San Benito/Bitterwater
Population Group: Low Inc—Hollister (MSSA 140)
San Bernardino
Service Area: Argus/Trona (MSSA 142)
Service Area: Lake Arrowhead (MSSA 147)
Service Area: Needles/Topock (CA/AZ)
Service Area: 29 Palms/Yucca Valley
Population Group: Low Inc—Fontana East (MSSA 151f)
Population Group: Low Inc—Big Bear Lake(MSSA 146)
San Diego
Service Area: Borrego Springs
Service Area: Julian/Pine Valley (MSSA 154)
Service Area: Mountain Empire
Population Group: Low Inc—G. Hills/L. Hghts (MSSA 161c)
Population Group: Low Inc—San Ysidro
Population Group: Low Inc—Fallbrook (MSSA 160)
Population Group: Low Inc—Oceanside W/Carlsbad W
Population Group: Low Inc—Vista East/San Marcos North
Population Group: Low Inc—City Heights (MSSA 161d)
San Joaquin

PRIMARY MEDICAL CARE: California
County Listing

County Name

Service Area: South And East Stockton (MSSA 169b)
Population Group: Low Inc—Escalon/Manteca/Ripon
San Luis Obispo
Population Group: Low Inc—Paso Robles (MSSA 173)
Population Group: Low Inc/MFW—Arroyo Grande (MSSA 171)
Santa Barbara
Service Area: Guadalupe
Facility: USP Lompoc
Shasta
Service Area: Central Shasta (MSSA 188)
Service Area: E Shasta (MSSA 190)
Service Area: Sacramento Canyon (MSSA 187)
Service Area: SW Shasta (MSSA 186)
Population Group: Low Inc—S Redding (MSSA 189.1)
Facility: Shasta Pc Clinic (MSSA 189.2)
*Sierra
Service Area: Downieville
*Siskiyou
Service Area: Butte Valley/Dorris
Service Area: Etna/Ft. Jones
Service Area: Happy Camp
Service Area: McCloud-Medicine Lake
Service Area: Tule Lake (MSSA 101.1)
Population Group: Low Inc—Yreka (MSSA 195)
Sonoma
Service Area: Cloverdale
Service Area: Guerneville
Service Area: Petaluma (MSSA 209)
Service Area: Sonoma Valley (MSSA 208)
Stanislaus
Service Area: Newman/Patterson (MSSA 213)
Population Group: Low Inc—Oakdale (MSSA 211)
Population Group: Low Inc—Hughson (MSSA 214)
Population Group: Low Inc—Turlock (MSSA 212)
Sutter
Population Group: Low Inc—South Sutter (MSSA 217)
Population Group: Low Inc—Meridian/Robbins (MSSA 216)
Population Group: Low Inc—Live Oak (MSSA 9.2)
*Tehama
Service Area: Corning/SW East Tehama/Las Molinas
Population Group: Low Inc—Red Bluff (MSSA 221)
*Trinity
Service Area: Hayfork/Forest Glen/Peanut (MSSA 225)
Service Area: Lower Trinity/Helena/Salyer
Service Area: Mad River/Ruth/Zenia (MSSA 226)
Tulare
Service Area: Earlimart
Service Area: Porterville
Service Area: Woodlake/Three Rivers (MSSA 229)
Population Group: Low Inc—Lindsay (MSSA 228)
Population Group: Low Inc—Cutler/Orosi/Dinuba

PRIMARY MEDICAL CARE: California
County Listing

County Name

Population Group: Low Inc/MFW—Tulare (MSSA 233b)
Population Group: Low Inc/MFW—Visalia
*Tuolumne
Service Area: Groveland
Service Area: Stanislaus/Yosemite
Ventura
Service Area: Los Padres (MSSA 237)
Population Group: Low Inc—Santa Paula (MSSA 239.1)
Population Group: Low Inc—C. Oxnard (MSSA 241b)
C.T. 1069.99
Yuba
Service Area: Yuba Foothills (MSSA 247)
Population Group: Low Inc—Wheatland (MSSA 248.1)
Population Group: Low Inc—Marysville (MSSA 218.2)

PRIMARY MEDICAL CARE: California
Service Area Listing

Service Area Name

Argus/Trona (MSSA 142)
County—San Bernardino
Parts:
C.T. 89.01
Arvin/Lamont (MSSA 61)
County—Kern
Parts:
C.T. 62–64
Big Valley
County—Lassen
Parts:
Big Valley Division
County—Modoc
Parts:
Adin-Lookout Division
Bolinas/Stinson Beach
County—Marin
Parts:
C.T. 1321–1322
Boonville/Navarro/Philo/Yorkville
County—Mendocino
Parts:
C.T. 112
Borrego Springs
County—San Diego
Parts:
C.T. 210
Brawley/Calipatria (MSSA 50/51)
County—Imperial
Parts:
C.T. 101–107
C.T. 123.02
Butte Valley/Dorris
County—Siskiyou
Parts:
C.T. 2
Buttonwillow (MSSA 59)
County—Kern
Parts:
C.T. 37
Calexico (MSSA 49)
County—Imperial
Parts:
C.T. 119–122
Central Shasta (MSSA 188)
County—Shasta
Parts:
C.T. 126

PRIMARY MEDICAL CARE: California
Service Area Listing

Service Area Name

Chowchilla
County—Madera
Parts:
C.T. 2–3
Cloverdale
County—Sonoma
Parts:
C.T. 1541–1542
Colfax (MSSA 118.1)
County—Placer
Parts:
C.T. 219.01–219.02
C.T. 220.02
Corcoran (MSSA 68)
County—Kings
Parts:
C.T. 13–16
Corning/SW East Tehama/Las Molinas
County—Tehama
Parts:
C.T. 9–11
C.T. 12.98
Covelo
County—Mendocino
Parts:
C.T. 101
Downieville
County—Sierra
Parts:
West Sierra Division
E Shasta (MSSA 190)
County—Shasta
Parts:
C.T. 127
Earlimart
County—Tulare
Parts:
C.T. 32
C.T. 42–44
East Imperial (MSSA 47)
County—Imperial
Parts:
C.T. 124
El Centro (MSSA 48)
County—Imperial
Parts:
C.T. 108–111
C.T. 112.01–112.02
C.T. 113–117
C.T. 118.01–118.03
El Monte (MSSA 78.2oo)
County—Los Angeles
Parts:
C.T. 4323–4324
C.T. 4326–4328
C.T. 4331–4335
C.T. 4337–4340
Etna/Ft. Jones
County—Siskiyou
Parts:
Etna CCD
Fort Jones CCD
Feather Falls (MSSA 11)
County—Butte
Parts:
C.T. 24
Ferndale (MSSA 41)
County—Humboldt
Parts:
C.T. 112
Foresthill/Back Country
County—Placer

PRIMARY MEDICAL CARE: California
Service Area Listing

Service Area Name

Parts:
C.T. 202
Frazier Park (MSSA 57.1)
County—Kern
Parts:
C.T. 33.02
Garberville (MSSA 44)
County—Humboldt
Parts:
C.T. 113
Gonzales/Greenfield/Soledad
County—Monterey
Parts:
C.T. 108.98
C.T. 109
C.T. 111–112
Groveland
County—Tuolumne
Parts:
C.T. 42
Guadalupe
County—Santa Barbara
Parts:
C.T. 25
Guerneville
County—Sonoma
Parts:
C.T. 1537.01–1537.02
C.T. 1543
C.T. 1543.99
Happy Camp
County—Siskiyou
Parts:
C.T. 5
Hayfork/Forest Glen/Peanut(MSSA 225)
County—Trinity
Parts:
C.T. 3.98
Huntington Park (MSSA 78.2ccc)
County—Los Angeles
Parts:
C.T. 2281
C.T. 2281–2282
C.T. 2282–2287
C.T. 2287–2288
C.T. 2288–2289
C.T. 2289
C.T. 2291
C.T. 2291–2294
C.T. 2311
C.T. 2318–2319
C.T. 2328
C.T. 2392–2393
C.T. 2395–2396
C.T. 5325
C.T. 5326.01–5326.02
C.T. 5327–5328
C.T. 5328–5329
C.T. 5329–5330
C.T. 5331.01–5331.02
C.T. 5332
C.T. 5345
C.T. 5347
C.T. 5348.01–5348.02
Julian/Pine Valley (MSSA 154)
County—San Diego
Parts:
C.T. 209.01–209.02
Kerman (MSSA 29)
County—Fresno
Parts:
C.T. 39–41

PRIMARY MEDICAL CARE: California
Service Area Listing

Service Area Name

King City
County—Monterey
Parts:
C.T. 113
C.T. 114.02
Lake Arrowhead (MSSA 147)
County—San Bernardino
Parts:
C.T. 108–110
Lone Pine
County—Inyo
Parts:
C.T. 5–7
Los Padres (MSSA 237)
County—Ventura
Parts:
C.T. 1
Lower Trinity/Helena/Salyer
County—Trinity
Parts:
C.T. 2
Mad River/Ruth/Zenia(MSSA 226)
County—Trinity
Parts:
C.T. 4
Madera West/Southwest (MSSA 80)
County—Madera
Parts:
C.T. 4
C.T. 5.02–5.05
C.T. 6.01–6.02
C.T. 7–10
Mariposa/Coulterville
County—Mariposa
Parts:
Coulterville Division
Mariposa Division
McCloud-Medicine Lake
County—Siskiyou
Parts:
C.T. 12
Mendota (MSSA 25)
County—Fresno
Parts:
C.T. 83
C.T. 84.01–84.02
Mountain Empire
County—San Diego
Parts:
C.T. 211
N. El Dorado Co
County—El Dorado
Parts:
C.T. 306.03
Needles/Topock (CA/AZ)
County—San Bernardino
Parts:
C.T. 105–107
Newman/Patterson (MSSA 213)
County—Stanislaus
Parts:
C.T. 32
C.T. 33.98
C.T. 34.98
C.T. 35
Oakland South (MSSA 2d)
County—Alameda
Parts:
C.T. 4061–4062
C.T. 4065–4066
C.T. 4070–4078
C.T. 4082–4089

PRIMARY MEDICAL CARE: California
Service Area Listing

Service Area Name

C.T. 4095–4098
C.T. 4101–4103
Petaluma (MSSA 209)
County—Sonoma
Parts:
C.T. 1506.01–1506.04
C.T. 1507–1511
C.T. 1512.01–1512.02
C.T. 1513.01–1513.04
Pollock Pines (MSSA 23.2)
County—El Dorado
Parts:
C.T. 314.01–314.03
C.T. 316.98
Porterville
County—Tulare
Parts:
C.T. 27
C.T. 33–41
C.T. 45
Rio Dell/Scotia (MSSA 43)
County—Humboldt
Parts:
C.T. 111
Parts:
C.T. 5990
C.T. 5990–5991
C.T. 5991
Sacramento Canyon (MSSA 187)
County—Shasta
Parts:
C.T. 125
San Benito/Bitterwater
County—San Benito
Parts:
C.T. 8
San Joaquin-Tranquility (MSSA 26)
County—Fresno
Parts:
C.T. 82
Santa Catalina Island (MSSA 78.1)
County—Los Angeles
Parts:
C.T. 5990–5991
Selma (MSSA 33)
County—Fresno
Parts:
C.T. 16–17
C.T. 70.01–70.02
C.T. 71–73
Sonoma Valley (MSSA 208)
County—Sonoma
Parts:
C.T. 1501–1502
C.T. 1503.01–1503.02
C.T. 1504–1505
South And East Stockton (MSSA 169b)
County—San Joaquin
Parts:
C.T. 1–3
C.T. 5–8
C.T. 8.99
C.T. 16–26
C.T. 27.01–27.02
C.T. 28–29
C.T. 36.01–36.02
C.T. 37–39
Stanislaus/Yosemite
County—Tuolumne
Parts:
C.T. 21.98
C.T. 31.98

PRIMARY MEDICAL CARE: California
Service Area Listing

Service Area Name

Surprise Valley
County—Modoc
Parts:
Surprise Valley Division
SE Kern (MSSA 65)
County—Kern
Parts:
C.T. 55.03–55.06
C.T. 56–59
SW Shasta/MSSA 186
County—Shasta
Parts:
C.T. 124
C.T. 128.97–128.98
Taft (MSSA 57.2)
County—Kern
Parts:
C.T. 33.03–33.04
C.T. 34–36
Tehachapi (MSSA 62)
County—Kern
Parts:
C.T. 60.01–60.02
C.T. 61
Tule Lake (MSSA 101.1)
County—Siskiyou
Parts:
C.T. 1
Wasco/Shafter (MSSA 58)
County—Kern
Parts:
C.T. 39–45
Willow Creek (MSSA 38)
County—Humboldt
Parts:
C.T. 101
Woodlake/Three Rivers(MSSA 229)
County—Tulare
Parts:
C.T. 1
C.T. 7
Yuba Foothills (MSSA 247)
County—Yuba
Parts:
C.T. 411
29 Palms/Yucca Valley
County—San Bernardino
Parts:
C.T. 104.02–104.03
C.T. 104.05–104.09

PRIMARY MEDICAL CARE: California
Population Group Listing

Population Group

Low Inc—Alturas Div (MSSA 98) 2
County—Modoc
Parts:
Alturas Division
Low Inc—Angels (MSSA 12)
County—Calaveras
Parts:
C.T. 1
Low Inc—Bell (MSSA 78.2ddd)
County—Los Angeles
Parts:
C.T. 5324
C.T. 5333–5337
C.T. 5338.01–5338.02
C.T. 5343
C.T. 5344.01–5344.02
Low Inc—Big Bear Lake(MSSA 146)

PRIMARY MEDICAL CARE: California
Population Group Listing

Population Group

County—San Bernardino
Parts:
C.T. 111–115
Low Inc—Biggs/Gridley
County—Butte
Parts:
C.T. 34–36
Low Inc—Bishop (MSSA 53)
County—Inyo
Parts:
C.T. 1–4
Low Inc—C. Oxnard (MSSA 241b)
County—Ventura
Parts:
C.T. 30.01–30.02
C.T. 31–32
C.T. 34.01–34.02
C.T. 35
C.T. 37–41
C.T. 44.00–45.02
C.T. 47.01
C.T. 49
C.T. 50.01–50.02
Low Inc—C. Santa Ana (MSSA 116b)
County—Orange
Parts:
C.T. 744.05
C.T. 745.01
C.T. 746.01–746.02
C.T. 747.01–747.02
C.T. 748.01–748.02
C.T. 748.05–748.06
C.T. 749.01–749.02
C.T. 750.01–750.02
C.T. 751
C.T. 752.01–752.02
Low Inc—City Heights (MSSA 161d)
County—San Diego
Parts:
C.T. 14–15
C.T. 22–24
C.T. 25.01–25.02
C.T. 26
C.T. 27.01
C.T. 27.04–27.06
C.T. 34.01
C.T. 42–44
C.T. 53–58
C.T. 58.99–59.00
C.T. 60–61
Low Inc—Cutler/Orosi/Dinuba
County—Tulare
Parts:
C.T. 2
C.T. 3.02
C.T. 3.98
C.T. 4–6
Low Inc—Del Norte Co (MSSA 19)
County—Del Norte
Parts:
Low Income
Low Inc—E Bakersfield (MSSA 66b)
County—Kern
Parts:
C.T. 10
C.T. 11.01–11.03
C.T. 12–15
C.T. 20–22
C.T. 23.01–23.02
C.T. 24–26
C.T. 30
Low Inc—E Los Angeles (MSSA 78.2d)

PRIMARY MEDICAL CARE: California
Population Group Listing

Population Group

County—Los Angeles
Parts:
C.T. 5303–5306
C.T. 5308–5311
C.T. 5312.01–5312.02
C.T. 5313.01–5313.02
C.T. 5315.01–5315.02
C.T. 5316.01–5316.02
C.T. 5317.01–5317.02
Low Inc—E San Pedro/Long Beach (78.2p)
County—Los Angeles
Parts:
C.T. 2941–2949
C.T. 2949.99
C.T. 2951
C.T. 2951.99
C.T. 2961
C.T. 2961.99–2962.00
C.T. 2962.99
C.T. 2971
C.T. 2971.99
C.T. 5727–5729
C.T. 5755–5756
C.T. 5756.99–5757.00
C.T. 5757.99
Low Inc—Edison/Easton
County—Fresno
Parts:
C.T. 2–4
C.T. 7–13
C.T. 15
C.T. 18–20
C.T. 38.01–38.03
C.T. 42.01
Low Inc—Escalon/Manteca/Ripon
County—San Joaquin
Parts:
C.T. 49.01
C.T. 49.98
C.T. 50.01–50.02
C.T. 51.01
C.T. 51.06
C.T. 51.08–51.20
Low Inc—Exposition Pk (MSSA 78.2l)
County—Los Angeles
Parts:
C.T. 2216–2219
C.T. 2226–2227
C.T. 2246–2247
C.T. 2267
C.T. 2284
C.T. 2311–2318
C.T. 2340
C.T. 2342–2343
Low Inc—Fallbrook (MSSA 160)
County—San Diego
Parts:
C.T. 187
C.T. 188.01–188.03
C.T. 189.01–189.02
C.T. 190
Low Inc—Fontana East (MSSA 151f)
County—San Bernardino
Parts:
C.T. 28–34
C.T. 35.01–35.02
C.T. 36.02
C.T. 40
Low Inc—G. Hills/L. Hghts (MSSA 161c)
County—San Diego
Parts:
C.T. 34.02

PRIMARY MEDICAL CARE: California
Population Group Listing

Population Group

C.T. 35–36
C.T. 38
C.T. 38.99–39.00
C.T. 40–41
C.T. 45–50
C.T. 50.99–51.00
C.T. 51.99–52.00
Low Inc—Hanford/Lemoore (MSSA 69.2)
County—Kings
Parts:
C.T. 1–3
C.T. 4.01–4.02
C.T. 5–12
Low Inc—Highland Park (78.2i)
County—Los Angeles
Parts:
C.T. 1831.01–1831.02
C.T. 1832–1833
C.T. 1835–1838
C.T. 1991
C.T. 1992.01–1992.02
C.T. 1993
C.T. 1998
C.T. 2011–2012
C.T. 2013.01–2013.02
C.T. 2014.01–2014.02
C.T. 2015.01–2015.02
C.T. 2016–2017
C.T. 5307
Low Inc—Hollister (MSSA 140)
County—San Benito
Parts:
C.T. 1.98
C.T. 2–7
C.T. 9
Low Inc—Hughson (MSSA 214)
County—Stanislaus
Parts:
C.T. 28
C.T. 29.01–29.02
Low Inc—Lake Isabella (MSSA 63)
County—Kern
Parts:
C.T. 52.01–52.02
Low Inc—Lindsay (MSSA 228)
County—Tulare
Parts:
C.T. 8
C.T. 14–16
C.T. 25–26
C.T. 28
Low Inc—Live Oak (MSSA 9.2)
County—Sutter
Parts:
C.T. 507
Low Inc—Marysville (MSSA 218.2)
County—Yuba
Parts:
C.T. 401–407
C.T. 409.00–409.02
C.T. 410
Low Inc—Meridian/Robbins (MSSA 216)
County—Sutter
Parts:
C.T. 509
Low Inc—North Hollywood (MSSA 78.2bb)
County—Los Angeles
Parts:
C.T. 1224
C.T. 1230
C.T. 1231.02
C.T. 1232.01–1232.02

PRIMARY MEDICAL CARE: California
Population Group Listing

Population Group

C.T. 1233.01
C.T. 1239
C.T. 1241.01–1241.02
C.T. 1242.01–1242.02
C.T. 1243
C.T. 1252–1256
Low Inc—Oakdale (MSSA 211)
County—Stanislaus
Parts:
C.T. 1
C.T. 2.01–2.02
C.T. 42.98
Low Inc—Oceanside W/Carlsbad W
County—San Diego
Parts:
C.T. 178.01
C.T. 178.05
C.T. 179–184
C.T. 185.01
C.T. 185.04
C.T. 186.01
C.T. 186.03
Low Inc—Pajaro (MSSA 184.2)
County—Monterey
Parts:
C.T. 101.98
C.T. 102.02
C.T. 102.01
Low Inc—Palm Desert (MSSA 129.1a)
County—Riverside
Parts:
C.T. 445.01–445.02
C.T. 449.02–449.03
C.T. 450
C.T. 451.02–451.04
C.T. 452.01
Low Inc—Paso Robles (MSSA 173)
County—San Luis Obispo
Parts:
C.T. 100–103
Low Inc—Pico Rivera S (MSSA 78.2ww)
County—Los Angeles
Parts:
C.T. 5007–5009
C.T. 5023–5025
C.T. 5026.01–5026.02
C.T. 5027
C.T. 5029.02
C.T. 5320–5322
Low Inc—Red Bluff (MSSA 221)
County—Tehama
Parts:
C.T. 2
C.T. 4–8
Low Inc—Reedley/Parlier/Orange
County—Fresno
Parts:
C.T. 63
C.T. 65
C.T. 66.01–66.02
C.T. 67
C.T. 68.01–68.02
C.T. 69
Low Inc—S Redding (MSSA 189.1)
County—Shasta
Parts:
C.T. 120–123
Low Inc—S. Central Ne (MSSA 78.2ggg)
County—Los Angeles
Parts:
C.T. 2283
C.T. 2285–2286

PRIMARY MEDICAL CARE: California
Population Group Listing

Population Group

C.T. 2292–2294
C.T. 2319
C.T. 2321
C.T. 2327–2328
C.T. 2371
C.T. 2374–2376
C.T. 2392–2393
Low Inc—San Andreas (MSSA 13)
County—Calaveras
Parts:
C.T. 2–3
Low Inc—San Ysidro
County—San Diego
Parts:
C.T. 100.01–100.05
C.T. 100.07–100.09
C.T. 101.03–101.04
C.T. 101.06–101.09
C.T. 102–105
Low Inc—Santa Paula (MSSA 239.1)
County—Ventura
Parts:
C.T. 4–8
Low Inc—South Sutter (MSSA 217)
County—Sutter
Parts:
C.T. 511
Low Inc—Susanville
County—Lassen
Parts:
C.T. 401 (BNA 004 & 005)
C.T. 402–406
Low Inc—Turlock (MSSA 212)
County—Stanislaus
Parts:
C.T. 36.02–36.05
C.T. 37
C.T. 38.01–38.03
C.T. 39.03–39.07
Low Inc—Van Nuys Central (MSSA 78.2cc)
County—Los Angeles
Parts:
C.T. 1233.02
C.T. 1234–1235
C.T. 1236.01–1236.02
C.T. 1237–1238
C.T. 1271.01–1271.02
C.T. 1272–1274
C.T. 1276.01–1276.02
C.T. 1277
C.T. 1278.01–1278.02
C.T. 1279
C.T. 1281–1282
C.T. 1283.01
Low Inc—Venice/South Santa Monica
County—Los Angeles
Parts:
C.T. 2722
C.T. 2723.02
C.T. 2731–2739
C.T. 2751–2752
C.T. 2755
C.T. 7018.01–7018.02
C.T. 7019–7021
C.T. 7022.01–7022.02
C.T. 7026
C.T. 7028.03
Low Inc—Vista East/San Marcos North
County—San Diego
Parts:
C.T. 192.02–192.04
C.T. 195

PRIMARY MEDICAL CARE: California
Population Group Listing

Population Group

C.T. 196.01–196.02
C.T. 197.02
C.T. 199.02–199.03
C.T. 200.05–200.07
C.T. 200.09
Low Inc—W. Imperial (MSSA 52)
County—Imperial
Parts:
C.T. 0123.01
Low Inc—West Point/Wilseyville
County—Calaveras
Parts:
C.T. 4–5
Low Inc—Wheatland (MSSA 248.1)
County—Yuba
Parts:
C.T. 408
Low Inc—Willows (MSSA 37)
County—Glenn
Parts:
C.T. 103–105
Low Inc—Yreka (MSSA 195)
County—Siskiyou
Parts:
C.T. 0003.00
C.T. 0007.00
Low Inc—Antioch N./Pittsburg N.(MSSA18d)
County—Contra Costa
Parts:
C.T. 3050
C.T. 3071.02
C.T. 3072.01–3072.02
C.T. 3072.04–3072.05
C.T. 3090
C.T. 3100
C.T. 3110
C.T. 3120
C.T. 3132.01–3132.02
C.T. 3141.01–3141.02
C.T. 3142
C.T. 3142.98
C.T. 3552
Low Inc—Bell Garden(MSSA 78.2c)
County—Los Angeles
Parts:
C.T. 5302.01–5302.02
C.T. 5318
C.T. 5319.01–5319.02
C.T. 5323.01–5323.02
C.T. 5339–5342
Low Inc/MFW—Arroyo Grande (MSSA 171)
County—San Luis Obispo
Parts:
C.T. 117–124
Low Inc/MFW—Delano/Mcfarland (MSSA 60)
County—Kern
Parts:
C.T. 46–48
C.T. 49.01–49.02
C.T. 50
Low Inc/MFW—Dos Palos/Los Banos
County—Merced
Parts:
C.T. 21.98
C.T. 22
C.T. 23.01–23.02
C.T. 24
Low Inc/MFW—Lakeport (MSSA 70)
County—Lake
Parts:
C.T. 1–5
C.T. 10

PRIMARY MEDICAL CARE: California
Population Group Listing

Population Group

Low Inc/MFW—Tulare (MSSA 233b)
County—Tulare
Parts:
C.T. 21–22
C.T. 23.01–23.02
C.T. 24
C.T. 29.01–29.02
C.T. 30–31
Low Inc/MFW—Visalia
County—Tulare
Parts:
C.T. 9
C.T. 10.01–10.02
C.T. 11–13
C.T. 17.01–17.02
C.T. 18–19
C.T. 20.01–20.05
C.T. 1069.99
County—Ventura
Parts:
C.T. 2–3

PRIMARY MEDICAL CARE: California
Facility Listing

Facility Name

Family Health Care Clinic 3
County—Madera
FCI Terminal Island
County—Los Angeles
Harbor-UCLA Med Ctr Ambulatory Clinics
County—Los Angeles
INS Med Fac—El Centro
County—Imperial
INS Med Fac—San Pedro
County—Los Angeles
Kingsburg Hosp-Pc Clinic (MSSA 33)
County—Fresno
Long Beach Comprehensive Hlth Ctr
County—Los Angeles
Los Angeles Mission Comm. Clinic
County—Los Angeles
Natividad Family Hlth-Blanco Circle
County—Monterey
Natividad Prof Plaza-Alvin Drive
County—Monterey
Placer Co Medical Clinic
County—Placer
Redwood Coast Med Srvcs
County—Mendocino
Shasta Pc Clinic (MSSA 189.2)
County—Shasta
UHP Compton Medical Center
County—Los Angeles
USP Lompoc
County—Santa Barbara
Valley Medical Center
County—Fresno
Watts Health Center (MSSA 78.2aaa)
County—Los Angeles

PRIMARY MEDICAL CARE: Colorado
County Listing

County Name

Adams
Service Area: Bennett/Strasburg
Service Area: Commerce City
Population Group: Low Inc—Aurora
Population Group: Low Inc—Thornton
Population Group: Low Inc/MFW—Ft. Lupton/Brighton

PRIMARY MEDICAL CARE: Colorado
County Listing

County Name

Arapahoe
Service Area: Bennett/Strasburg
Population Group: Low Inc—Aurora
*Archuleta
*Baca
*Bent
Boulder
Population Group: Low Inc—Boulder City
Population Group: Low Inc/MFW—Ft. Lupton/Brighton
*Chaffee
Facility: Buena Vista Correctional Fac
*Cheyenne
*Clear Creek
*Conejos
Population Group: Low Inc—Conejos Co
*Costilla
*Crowley (g)
Facility: Arkansas Valley Correctional
*Custer
Denver
Service Area: La Casa
Service Area: Montbello
Population Group: Homeless—Downtown Denver
Facility: Denver Reception & Diagnostic Center
Facility: Denver Women's Correctional Facility
*Dolores
Douglas
Facility: FCI Englewood
El Paso
Service Area: Calhan-Yoder
Population Group: Low Income—Colorado Springs
*Elbert
Service Area: Limon/Hugo/Simla
*Fremont
Population Group: Low Inc—Fremont
Facility: Centennial Correctional Facility
Facility: Colorado State Penn
Facility: Colorado Territorial Correctional Facili
Facility: Colorado Women's In Canon City
Facility: Freemont Correctional Facility
Facility: FCI Florence
Facility: USP Florence—Admax
Facility: USP Florence
*Garfield
Service Area: Rifle
*Gilpin
*Hinsdale
*Huerfano
Service Area: Gardner
Population Group: Low Inc—E Huerfano
*Jackson
*Kiowa
Population Group: Low Inc—Kiowa Co
*Lake
*Las Animas
Population Group: Low Inc—Las Animas Co
*Lincoln
Service Area: Limon/Hugo/Simla
Facility: Limon Correctional Facility
*Logan
Service Area: Crook/Fleming
Population Group: Low Inc—W Logan Co
Facility: Sterling Correctional Facility
*Mineral
*Moffat

PRIMARY MEDICAL CARE: Colorado
County Listing

County Name

Service Area: Rangely
*Montezuma
Population Group: Low Inc/MFW—Montezuma Co
*Montrose
Service Area: Nucla/Norwood
Population Group: Low Inc—East Montrose/Ouray
*Morgan
Population Group: Low Inc/MFW—Morgan Co
*Otero
Population Group: Low Inc—Otero Co
*Ouray
Population Group: Low Inc—East Montrose/Ouray
*Park
*Phillips
*Prowers
Pueblo
Population Group: Low Inc—Pueblo Co
Facility: San Carlos Correctional Facility
Facility: Youthful Offenders Services
*Rio Blanco
Service Area: Rangely
*Rio Grande
*Routt
Service Area: Oak Creek/Yampa
*Saguache
Population Group: Low Inc/MFW—Saguache
*San Juan
*San Miguel
Service Area: Nucla/Norwood
*Sedgwick
Service Area: Julesburg (CO/NE)
*Washington
Weld
Population Group: Low Inc/MFW—Ft. Lupton/Brighton
Facility: Platte Valley Youth Services

PRIMARY MEDICAL CARE: Colorado
Service Area Listing

Service Area Name

Bennett/Strasburg
County—Adams
Parts:
East Adams Division
County—Arapahoe
Parts:
East Arapahoe Division
Calhan-Yoder
County—El Paso
Parts:
C.T. 39.01
C.T. 46
Commerce City
County—Adams
Parts:
C.T. 87.03
C.T. 87.05–87.06
C.T. 88.01–88.02
C.T. 89.01
C.T. 89.52
Crook/Fleming
County—Logan
Parts:
Crook Division
Fleming Division
Gardner
County—Huerfano
Parts:
Gardner Division
Julesburg (CO/NE)
County—Sedgwick
La Casa
County—Denver
Parts:
C.T. 2.01–2.02
C.T. 4.01–4.02
C.T. 11.01–11.02
Limon/Hugo/Simla
County—Elbert
Parts:
Agate Division
Simla Division
County—Lincoln
Montbello
County—Denver
Parts:
C.T. 83.04–83.06
C.T. 83.10–83.12
Nucla/Norwood
County—Montrose
Parts:
Nucla Division
County—San Miguel
Parts:
Norwood Division
Oak Creek/Yampa
County—Routt
Parts:
Oak Creek Division
Yampa Division
Rangely
County—Moffat
Parts:
Artesia Division
County—Rio Blanco
Parts:
Rangely Division
Rifle
County—Garfield
Parts:
Grand Valley Division
New Castle Division
Rifle Division

PRIMARY MEDICAL CARE: Colorado
Population Group Listing

Population Group

Homeless—Downtown Denver
County—Denver
Parts:
C.T. 16
C.T. 20
C.T. 24.01–24.02
C.T. 25
C.T. 26.01–26.02
C.T. 27.01–27.03
Low Inc—Aurora
County—Adams
Parts:
C.T. 78–82
C.T. 83.08–83.09
County—Arapahoe
Parts:
C.T. 70.07–70.08
C.T. 72
C.T. 72.89
C.T. 73–76
Low Inc—Boulder City
County—Boulder
Parts:
C.T. 121.01–121.02
C.T. 122.02–122.05
C.T. 123
C.T. 124.01
C.T. 126.02
C.T. 126.04
Low Inc—Conejos Co
County—Conejos
Parts:
Low Income
Low Inc—E Huerfano
County—Huerfano
Parts:
La Veta
Walsenburg
Low Inc—East Montrose/Ouray
County—Montrose
Parts:
Montrose CCD
Olathe CCD
County—Ouray
Parts:
Low Income
Low Inc—Fremont
County—Fremont
Parts:
Low Income
Low Inc—Kiowa Co
County—Kiowa
Parts:
Low Income
Low Inc—Las Animas Co
County—Las Animas
Parts:
Low Income
Low Inc—Otero Co
County—Otero
Parts:
Low Income
Low Inc—Pueblo Co
County—Pueblo
Parts:
Low Income
Low Inc—Thornton
County—Adams
Parts:
C.T. 90.01–90.03
C.T. 91.01–91.02
C.T. 92.01–92.03
C.T. 93.04
C.T. 93.06–93.10
C.T. 93.14–93.18
C.T. 94.01
C.T. 94.07
C.T. 95.01–95.02
C.T. 95.53
C.T. 96.03–96.06
C.T. 97.50
Low Inc—W Logan Co
County—Logan
Parts:
Low Income
Low Inc/MFW—Ft. Lupton/Brighton
County—Adams
Parts:
C.T. 85.12–85.14
C.T. 86.01–86.02
County—Boulder
Parts:

PRIMARY MEDICAL CARE: Colorado
Population Group Listing

Population Group

C.T. 128
C.T. 132.01
C.T. 132.04
C.T. 133.02–133.08
C.T. 134.01–134.02
C.T. 135.01–135.04
County—Weld
Parts:
Low Inc/MSFW
Low Inc/MFW—Montezuma Co
County—Montezuma
Parts:
Low Income
Low Inc/MFW—Morgan Co
County—Morgan
Parts:
Low Income
Low Inc/MFW—Saguache
County—Saguache
Parts:
Low Income/MFW
Low Income—Colorado Springs
County—El Paso
Parts:
C.T. 13.01
C.T. 14–17
C.T. 21.01–21.02
C.T. 22–23
C.T. 26–29
C.T. 33.02
C.T. 45.01
C.T. 52–54

PRIMARY MEDICAL CARE: Colorado
Facility Listing

Facility Name

Arkansas Valley Correctional 2
County—Crowley
Buena Vista Correctional Fac
County—Chaffee
Centennial Correctional Facility
County—Fremont
Colorado State Penn
County—Fremont
Colorado Territorial Correctional Facili
County—Fremont
Colorado Women's In Canon City
County—Fremont
Denver Reception & Diagnostic Center
County—Denver
Denver Women's Correctional Facility
County—Denver
Freemont Correctional Facility
County—Fremont
FCI Englewood
County—Douglas
FCI Florence
County—Fremont
Limon Correctional Facility
County—Lincoln
Platte Valley Youth Services
County—Weld
San Carlos Correctional Facility
County—Pueblo
Sterling Correctional Facility
County—Logan
USP Florence
County—Fremont
USP Florence—Admax
County—Fremont
Youthful Offenders Services
County—Pueblo

PRIMARY MEDICAL CARE: Connecticut
County Listing

County Name

Fairfield
Service Area: Central Norwalk
Service Area: Central/East Bridgeport
Service Area: Southwest Bridgeport
Population Group: Low Inc—Danbury
Population Group: Low-Inc South End Stamford
Population Group: Low-Income Stratford
Hartford
Service Area: Charter Oak/Frog Hollow/Parkville/Barry
Service Area: North-Central Hartford
Population Group: Low Inc—East Hartford
Population Group: Low Inc—Central New Britain
Facility: CT Child Med Ctr—PC Ctr
New Haven
Service Area: Central Waterbury
Service Area: Fair Haven
Population Group: Low Inc—Central New Haven
Population Group: Low Inc—Ansonia
Population Group: Low Income—Central Meriden
New London
Service Area: Central Groton
Population Group: Low Inc—Norwich
Population Group: Low Inc—Central New London
Tolland
Population Group: Low Inc—Rockville
Windham
Population Group: Low Inc—Town Of Windham

PRIMARY MEDICAL CARE: Connecticut
Service Area Listing

Service Area Name

Central Groton
County—New London
Parts:
C.T. 7022–7023
C.T. 7025
C.T. 7027–7028
Central Norwalk
County—Fairfield
Parts:
C.T. 440–441
C.T. 444–445
Central Waterbury
County—New Haven
Parts:
C.T. 3501–3508
C.T. 3512
C.T. 3514
C.T. 3517
Central/East Bridgeport
County—Fairfield
Parts:
C.T. 713–717
C.T. 735–736
C.T. 738–744
Charter Oak/Frog Hollow/Parkville/Barry
County—Hartford
Parts:
C.T. 5001–5004
C.T. 5019
C.T. 5027–5030
C.T. 5043
C.T. 5045–5046
C.T. 5049

PRIMARY MEDICAL CARE: Connecticut
Service Area Listing

Service Area Name

Fair Haven
County—New Haven
Parts:
C.T. 1421
C.T. 1423–1425
C.T. 1426.02
North–Central Hartford
County—Hartford
Parts:
C.T. 5005
C.T. 5008–5018
C.T. 5020–5022
C.T. 5034–5035
C.T. 5037
Southwest Bridgeport
County—Fairfield
Parts:
C.T. 702–712

PRIMARY MEDICAL CARE: Connecticut
Population Group Listing

Population Group

Low Inc—Ansonia 3
County—New Haven
Parts:
C.T. 1252–1254
Low Inc—Central New Britain
County—Hartford
Parts:
C.T. 4159
C.T. 4161–4162
C.T. 4171
Low Inc—Central New Haven
County—New Haven
Parts:
C.T. 1401–1409
C.T. 1413–1417
C.T. 1544–1545
Low Inc—Central New London
County—New London
Parts:
C.T. 6901
C.T. 6903–6906
C.T. 6906.99–6907.00
C.T. 6907.99
Low Inc—Danbury
County—Fairfield
Parts:
C.T. 2101–2102
Low Inc—East Hartford
County—Hartford
Parts:
C.T. 5102–5104
C.T. 5106
Low Inc—Norwich
County—New London
Parts:
C.T. 6961
C.T. 6964–6970
Low Inc—Rockville
County—Tolland
Parts:
C.T. 5301–5302
Low Inc—Town Of Windham
County—Windham
Parts:
Windham Town
Low Income—Central Meriden
County—New Haven
Parts:
C.T. 1701.01–1701.02

PRIMARY MEDICAL CARE: Connecticut
Population Group Listing

County Name

C.T. 1702.01–1702.02
C.T. 1703
C.T. 1710
C.T. 1713–1715
Low-Inc South End Stamford
County—Fairfield
Parts:
C.T. 201
C.T. 214–215
C.T. 222–223
Low-Income Stratford
County—Fairfield
Parts:
C.T. 803–804

PRIMARY MEDICAL CARE: Connecticut
Facility Listing

Facility Name

CT Child Med Ctr—PC Ctr 1
County—Hartford

PRIMARY MEDICAL CARE: Delaware
County Listing

County Name

Kent
Population Group: Low Inc—Milford
New Castle
Service Area: Middletown-Odessa
Service Area: Wilmington—Southbridge
*Sussex
Population Group: Low Inc—Milford

PRIMARY MEDICAL CARE: Delaware
Service Area Listing

Service Area Name

Middletown-Odessa
County—New Castle
Parts:
C.T. 166–169
Wilmington—Southbridge
County—New Castle
Parts:
C.T. 1
C.T. 6.01–6.02
C.T. 7–9
C.T. 15–17
C.T. 19–23
C.T. 154–155

PRIMARY MEDICAL CARE: Delaware
Population Group Listing

Population Group

Low Inc—Milford 1
County—Kent
Parts:
C.T. 424–431
County—Sussex
Parts:
C.T. 501–502
C.T. 508

PRIMARY MEDICAL CARE: District Of Columbia
County Listing

County Name

Dist Of Columbia
Service Area: Anacostia
Service Area: East Capitol St. (Far S.E.)

PRIMARY MEDICAL CARE: District Of Columbia
County Listing

County Name

Service Area: Mt. Pleasant/Upper Cardozo
Service Area: South Capitol
Population Group: Homeless—Downtown Washington
Facility: DC General Ambulatory Care Center

PRIMARY MEDICAL CARE: District Of Columbia
Service Area Listing

Service Area Name

Anacostia
County—Dist Of Columbia
Parts:
C.T. 74.01
C.T. 74.04
C.T. 74.06–74.09
C.T. 74.30
C.T. 75.02–75.04
C.T. 76.01
C.T. 76.05
East Capitol St. (Far S.E.)
County—Dist Of Columbia
Parts:
C.T. 77.03
C.T. 77.07–77.09
C.T. 78.03–78.04
C.T. 78.07–78.09
C.T. 78.60
C.T. 96.02–96.03
C.T. 99.03–99.07
Mt. Pleasant/Upper Cardozo
County—Dist Of Columbia
Parts:
C.T. 25.02
C.T. 27.01–27.02
C.T. 28.01–28.02
C.T. 29–30
C.T. 35–39
C.T. 43
South Capitol
County—Dist Of Columbia
Parts:
C.T. 60.20
C.T. 64.10
C.T. 71–72

PRIMARY MEDICAL CARE: District Of Columbia
Population Group Listing

Population Group

Homeless—Downtown Washington 2
County—Dist Of Columbia
Parts:
C.T. 40.01–40.02
C.T. 41
C.T. 42.02
C.T. 46–47
C.T. 48.01–48.02
C.T. 49.01–49.02
C.T. 50–51
C.T. 52.10
C.T. 52.20
C.T. 53.01–53.02
C.T. 54.01–54.02
C.T. 55.01–55.02
C.T. 56
C.T. 57.01–57.02
C.T. 58–59

PRIMARY MEDICAL CARE: District Of Columbia
Facility Listing

Facility Name

DC General Ambulatory Care Center 4
County—Dist Of Columbia

PRIMARY MEDICAL CARE: Florida
County Listing

County Name

Alachua
Population Group: Low Inc—Alachua Co
Facility: Gainesville Corr Inst
*Baker
Population Group: Low Inc—Baker
Bradford
Brevard
Facility: Brevard Corr Inst
Broward
Population Group: Low Inc—Pompano
Population Group: Low Inc—Central Ft Lauderdale
*Calhoun
Population Group: Low Inc—Calhoun
Facility: Calhoun Corr Inst
Charlotte
Population Group: Low Inc—Charlotte Co
*Citrus
Population Group: Low Inc—Citrus Co
Clay
Service Area: Keystone Heights
Collier
Service Area: Everglades
Service Area: Imokalee
*Columbia
Population Group: Low Inc—Columbia Co
Dade
Service Area: Wynwood
Population Group: Low Inc—North Beach
Population Group: Low Inc—Little Havana
Population Group: Low Inc—South Beach
Population Group: Low Inc—Opa Locka
Population Group: Low Inc—Liberty City
Population Group: Low Inc—Hialeah
Population Group: Low Inc—Golden Glades
Population Group: Low Inc—Homestead
Population Group: Low Inc—West Perrine
Facility: Cape South School-Based HC
Facility: Dade Corr Inst
Facility: Doris Ison Comm Hlth Ctr
Facility: FCI Miami
Facility: Helen B. Bentley Family Health Center
Facility: Jackson Mem Hosp Outpt Clinics
Facility: Krome Medical Referral Center
*De Soto
Population Group: Low Inc/MFW—Desoto Co
Facility: Desoto Corr Inst
*Dixie (g)
Facility: Cross City Corr Inst
Duval
Population Group: Low Inc—N Jacksonville
Escambia
Service Area: Atmore/Century (AL/FL)
Facility: Century Corr Inst
Flagler
Population Group: Low Inc—Flagler
*Franklin
Population Group: Low Inc—Franklin Co
Gadsden
*Gilchrist
Population Group: Low Inc/MFW—Gilchrist

PRIMARY MEDICAL CARE: Florida
County Listing

Population Group

Facility: Lancaster Corr Inst
*Glades
*Gulf
Population Group: Low Inc—Gulf Co
Facility: Gulf Corr Inst
*Hamilton
*Hardee
*Hendry
Service Area: Labelle
Population Group: Low Inc/MFW—Clewiston
Facility: Hendry Corr Inst
*Highlands
Population Group: Low Inc/MFW—Highlands Co
Facility: Avon Park Corr Inst
Hillsborough
Population Group: Low Inc—Suitcase City
Population Group: Low Inc—E Tampa/Ybor City
Population Group: Low Inc/MFW—Ruskin/Appollo Beach
Population Group: Low Inc/MFW—Plant City/Dover
*Holmes (g)
Facility: Holmes Corr Inst
*Indian River
Population Group: Low Inc/MFW-Fellsmere
Facility: Indian River Corr Inst
*Jackson
Population Group: Low Inc—Jackson Co
Facility: Apalachee Corr Inst
Facility: FCI Marianna
Facility: Jackson Corr Inst
*Jefferson
Population Group: Low Inc—Jefferson Co
*Lafayette
Lake
Population Group: Low Inc/MFW—Lake Co.
Lee
Service Area: Dunbar
Population Group: Low Inc—N Cape Coral/Pine Island
Leon
Population Group: Low Inc—Bond Community
*Levy
Population Group: Low Inc/MFW—Levy Co
*Liberty
Population Group: Low Inc—Liberty
Facility: Liberty Corr Inst
*Madison
Manatee
Population Group: Low Inc/MFW—Manatee Co
Marion
Population Group: Low Inc—Marion Co
Facility: Florida Corr Inst
Facility: Marion Corr Inst
Martin
Service Area: Indiantown
Nassau
Population Group: Low Inc/MFW—Nassau
Okaloosa
Population Group: Low Inc/MFW—Okaloosa
Facility: Okaloosa Corr Inst
*Okeechobee
Population Group: Low Inc/MFW—Okeechobee Co
Orange

PRIMARY MEDICAL CARE: Florida
County Listing

Population Group

Population Group: MFW—Orange
Facility: Central Fl Reception Ctr
Osceola
Population Group: Low Inc—Osceola
Palm Beach
Population Group: Low Inc/MFW—Belle Glade/Pahokee
Pasco
Population Group: Low Inc/MFW—Eastern Pasco
Pinellas
Population Group: Low Inc—Inner St. Petersburg
Population Group: Low Inc—C Clearwater
Facility: Pinellas Cty Corr Institution
Polk
Service Area: Frostproof/Lake Wales
Population Group: Low Inc—Haines City
*Putnam
Population Group: Low Inc/MFW—Putnam
Facility: Putnam Corr Inst
Santa Rosa
Population Group: Low Inc—Santa Rosa
Facility: Santa Rosa Corr Inst
Seminole
Population Group: MFW—Sanford Division
St Johns
Population Group: Low Inc/MFW—Hastings
St Lucie
Population Group: Low Inc—Fort Pierce
*Sumter
Population Group: Low Inc/MFW—Sumter Co
Facility: FCC Coleman
*Suwannee
*Taylor
*Union
Population Group: Low Inc—Union
Facility: North Fl Reception Ctr
Volusia
Service Area: Pierson/Seville/Deleon Spring
*Wakulla
*Walton (g)
Facility: Walton Corr Inst
*Washington

PRIMARY MEDICAL CARE: Florida
Service Area Listing

Service Area Name

Atmore/Century (AL/FL)
County—Escambia
Parts:
C.T. 38–40
Dunbar
County—Lee
Parts:
C.T. 5.01–5.02
C.T. 6
Everglades
County—Collier
Parts:
C.T. 111.01–111.02
Frostproof/Lake Wales
County—Polk
Parts:
C.T. 142–144
C.T. 154–158
C.T. 160
C.T. 161.98

PRIMARY MEDICAL CARE: Florida
Service Area Listing

Service Area Name

Imokalee
County—Collier
Parts:
C.T. 112.01–112.03
C.T. 113–114
Indiantown
County—Martin
Parts:
Indiantown Division
Keystone Heights
County—Clay
Parts:
Keystone Heights Division
Labelle
County—Hendry
Parts:
C.T. 9603–9604
Pierson/Seville/Deleon Spring
County—Volusia
Parts:
C.T. 901
Wynwood
County—Dade
Parts:
C.T. 14.01–14.02
C.T. 20.01
C.T. 20.03–20.04
C.T. 21
C.T. 22.01–22.02
C.T. 25–26
C.T. 27.01–27.02
C.T. 28–29

PRIMARY MEDICAL CARE: Florida
Population Group Listing

Population Group

Low Inc—Alachua Co 1
County—Alachua
Parts:
Low Income
Low Inc—Baker
County—Baker
Parts:
Low Income
Low Inc—Bond Community
County—Leon
Parts:
C.T. 1
C.T. 4–6
C.T. 10.01
C.T. 11.01–11.02
C.T. 12–14
Low Inc—C Clearwater
County—Pinellas
Parts:
C.T. 261–264
C.T. 267.01
C.T. 270
C.T. 271.01–271.02
Low Inc—Calhoun
County—Calhoun
Parts:
Low Income
Low Inc—Central Ft Lauderdale
County—Broward
Parts:
C.T. 409–416
C.T. 427–431
C.T. 503.04
C.T. 508
C.T. 803

PRIMARY MEDICAL CARE: Florida
Population Group Listing

Population Group

C.T. 804.01–804.02
Low Inc—Charlotte Co
County—Charlotte
Parts:
Low Income
Low Inc—Citrus Co
County—Citrus
Parts:
Low Income
Low Inc—Columbia Co
County—Columbia
Parts:
Low Income
Low Inc—E Tampa/Ybor City
County—Hillsborough
Parts:
C.T. 10
C.T. 17–19
C.T. 30–44
C.T. 49–51
Low Inc—Flagler
County—Flagler
Parts:
Low Income
Low Inc—Fort Pierce
County—St Lucie
Parts:
C.T. 1
C.T. 1.99–2.00
C.T. 3–5
C.T. 9.02
Low Inc—Franklin Co
County—Franklin
Parts:
Low Income
Low Inc—Golden Glades
County—Dade
Parts:
C.T. 2.04
C.T. 3.01–3.04
C.T. 4.01–4.07
C.T. 11.01–11.03
C.T. 95.01–95.02
Low Inc—Gulf Co
County—Gulf
Parts:
Low-Income
Low Inc—Haines City
County—Polk
Parts:
C.T. 125–127
C.T. 141.00–141.02
Low Inc—Hialeah
County—Dade
Parts:
C.T. 6.03–6.06
C.T. 7.01
C.T. 7.03–7.04
C.T. 8.01–8.02
C.T. 9.01–9.03
C.T. 16.01–16.02
C.T. 17.01
C.T. 92
C.T. 93.02–93.03
C.T. 101.16
Low Inc—Homestead
County—Dade
Parts:
C.T. 104–105
C.T. 106.02
C.T. 107.01–107.02
C.T. 108–109

PRIMARY MEDICAL CARE: Florida
Population Group Listing

Population Group

C.T. 110.01–110.02
C.T. 111
C.T. 112.01–112.02
C.T. 113
C.T. 114.98
Low Inc—Inner St. Petersburg
County—Pinellas
Parts:
C.T. 201.01
C.T. 203.01
C.T. 204–208
C.T. 209.95
C.T. 210.95
C.T. 212–213
C.T. 213.99–214.00
C.T. 215
C.T. 216.95
C.T. 218.95
C.T. 219.95
C.T. 220
C.T. 234–235
Low Inc—Jackson Co
County—Jackson
Parts:
Low Income
Low Inc—Jefferson Co
County—Jefferson
Parts:
Low Income
Low Inc—Liberty
County—Liberty
Parts:
Low Income
Low Inc—Liberty City
County—Dade
Parts:
C.T. 4.08
C.T. 10.01–10.04
C.T. 15.01–15.02
C.T. 17.02
C.T. 18.01–18.03
C.T. 19.01
C.T. 19.03–19.04
C.T. 23
Low Inc—Little Havana
County—Dade
Parts:
C.T. 30.02
C.T. 36.01–36.02
C.T. 49.01–49.02
C.T. 50.01–50.02
C.T. 51
C.T. 52.01–52.02
C.T. 53.01–53.02
C.T. 54.01–54.02
C.T. 55.01–55.02
C.T. 56
C.T. 57.03–57.04
C.T. 58.01
C.T. 62
C.T. 63.01–63.02
C.T. 64.01–64.03
C.T. 65
Low Inc—Marion Co
County—Marion
Parts:
Low Income
Low Inc—N Cape Coral/Pine Island
County—Lee
Parts:
C.T. 103.01–103.02
C.T. 104.01–104.02

PRIMARY MEDICAL CARE: Florida
Population Group Listing

Population Group

C.T. 206–208
C.T. 701–702
Low Inc—N Jacksonville
County—Duval
Parts:
C.T. 1
C.T. 1.99–2.00
C.T. 2.99–3.00
C.T. 3.99–4.00
C.T. 5
C.T. 9–20
C.T. 25–29
C.T. 107–118
C.T. 121
Low Inc—North Beach
County—Dade
Parts:
C.T. 39.01–39.02
C.T. 39.04–39.05
Low Inc—Opa Locka
County—Dade
Parts:
C.T. 5.01–5.03
C.T. 6.01–6.02
C.T. 94
C.T. 100.01–100.02
C.T. 100.05–100.08
Low Inc—Osceola
County—Osceola
Parts:
Low Income
Low Inc—Pompano
County—Broward
Parts:
C.T. 303–306
C.T. 308.01
Low Inc—Santa Rosa
County—Santa Rosa
Parts:
Low Income
Low Inc—South Beach
County—Dade
Parts:
C.T. 42–45
C.T. 45.99
Low Inc—Suitcase City
County—Hillsborough
Parts:
C.T 108.05
C.T. 2–4
C.T. 6–9
C.T. 105
C.T. 108.06–108.07
C.T. 112.06
Low Inc—Union
County—Union
Parts:
Low Income
Low Inc—West Perrine
County—Dade
Parts:
C.T. 83.03
C.T. 101.14
C.T. 102.02–102.03
Low Inc/MFW—Belle Glade/Pahokee
County—Palm Beach
Parts:
C.T. 80.01–80.02
C.T. 81.01–81.02
C.T. 82.01–82.03
C.T. 83.01–83.02
Low Inc/MFW—Clewiston

PRIMARY MEDICAL CARE: Florida
Population Group Listing

Population Group

County—Hendry
Parts:
C.T. 9601–9602
Low Inc/MFW—Desoto Co
County—De Soto
Parts:
Low Income/MFW
Low Inc/MFW—Eastern Pasco
County—Pasco
Parts:
C.T. 320.01–320.02
C.T. 321.01–321.02
C.T. 322–329
C.T. 330.01–330.04
C.T. 331
Low Inc/MFW—Gilchrist
County—Gilchrist
Parts:
Low Income/MFW
Low Inc/MFW—Hastings
County—St Johns
Low Inc/MFW—Highlands Co
County—Highlands
Parts:
Low Income
MFW
Low Inc/MFW—Lake Co.
County—Lake
Parts:
Low Inc/MFW
Low Inc/MFW—Levy Co
County—Levy
Parts:
Low Inc/MFW—Levy
Low Inc/MFW—Manatee Co
County—Manatee
Parts:
C.T. 1.01–1.04
C.T. 2
C.T. 3.01–3.03
C.T. 6.01
C.T. 7.01–7.02
C.T. 13
C.T. 15.01–15.02
C.T. 16
C.T. 19.01
C.T. 19.03–19.04
Low Inc/MFW—Nassau
County—Nassau
Parts:
Low Income/MFW
Low Inc/MFW—Okaloosa
County—Okaloosa
Parts:
Low Income/MFW
Low Inc/MFW—Okeechobee Co
County—Okeechobee
Parts:
Low Inc/MFW—Okeechobee
Low Inc/MFW—Plant City/Dover
County—Hillsborough
Parts:
C.T. 101.02–101.04
C.T. 124–131
Low Inc/MFW—Putnam
County—Putnam
Parts:
Low Income/MFW
Low Inc/MFW—Ruskin/Appollo Beach
County—Hillsborough
Parts:
C.T. 140.02

PRIMARY MEDICAL CARE: Florida
Population Group Listing

Population Group

C.T. 141.01
C.T. 141.03–141.04
Low Inc/MFW—Sumter Co
County—Sumter
Parts:
Low Income/MFW
Low Inc/MFW-Fellsmere
County—Indian River
Parts:
Low Inc/MFW—Fellsmere
MFW—Orange
County—Orange
Parts:
MFW
MFW—Sanford Division
County—Seminole
Parts:
MFW—Sanford

PRIMARY MEDICAL CARE: Florida
Facility Listing

Facility Name

Apalachee Corr Inst
County—Jackson
Avon Park Corr Inst
County—Highlands
Brevard Corr Inst
County—Brevard
Calhoun Corr Inst
County—Calhoun
Cape South School-Based HC
County—Dade
Central Fl Reception Ctr
County—Orange
Century Corr Inst
County—Escambia
Cross City Corr Inst
County—Dixie
Dade Corr Inst
County—Dade
Desoto Corr Inst
County—De Soto
Doris Ison Comm Hlth Ctr
County—Dade
Florida Corr Inst
County—Marion
FCC Coleman
County—Sumter
FCI Marianna
County—Jackson
FCI Miami
County—Dade
Gainesville Corr Inst
County—Alachua
Gulf Corr Inst
County—Gulf
Helen B. Bentley Family Health Center
County—Dade
Hendry Corr Inst
County—Hendry
Holmes Corr Inst
County—Holmes
Indian River Corr Inst
County—Indian River
Jackson Corr Inst
County—Jackson
Jackson Mem Hosp Outpt Clinics
County—Dade
Krome Medical Referral Center
County—Dade
Lancaster Corr Inst

PRIMARY MEDICAL CARE: Florida
Facility Listing

Facility Name

County—Gilchrist
Liberty Corr Inst
County—Liberty
Marion Corr Inst
County—Marion
North Fl Reception Ctr
County—Union
Okaloosa Corr Inst
County—Okaloosa
Pinellas Cty Corr Institution
County—Pinellas
Putnam Corr Inst
County—Putnam
Santa Rosa Corr Inst
County—Santa Rosa
Walton Corr Inst
County—Walton

PRIMARY MEDICAL CARE: Georgia
County Listing

County Name

*Appling
Population Group: Low Inc—Appling
*Atkinson
*Bacon
Population Group: Low Inc—Bacon Co
*Baker
*Baldwin
Population Group: Low Inc—Baldwin
*Banks
Barrow
Population Group: Low Inc—Barrow Co
Bartow
Population Group: Low Inc—Bartow Co
*Ben Hill
Population Group: Low Inc—Ben Hill Co
*Berrien
Population Group: Low Inc—Berrien Co
*Bleckley
Population Group: Low Inc—Bleckley Co
*Brantley
*Brooks
Bryan
Population Group: Low Inc—Pembroke
*Bulloch
Population Group: Low Inc—Bulloch
*Burke
Population Group: Low Inc—Burke Co
*Butts
Population Group: Low Inc—Butts Co
Facility: Ga Diagnostic Prison
*Camden
Service Area: Woodbine
*Candler
Population Group: Low Inc—Candler Co
*Charlton
Population Group: Low Inc—Charlton Co
Chatham
Population Group: Low Inc—N W Savannah
Chattahoochee
Population Group: Low Inc—Chattahoochee
*Chattooga
Cherokee
*Clay
Population Group: Low Inc—Clay
*Clinch
Population Group: Low Inc—Clinch Co
Cobb

PRIMARY MEDICAL CARE: Georgia
County Listing

Population Group: Low Inc—Central Marietta
Facility: Smyrna Health Center
*Colquitt
*Cook
Population Group: Low Inc—Cook
*Crawford
*Crisp
Population Group: Low Inc—Crisp Co
Dade
Population Group: Low Inc—Dade
*Dawson
De Kalb
Service Area: South Decatur/Candler/Mcafee
Population Group: Low Inc—Stone Mtn./Clarkston
Facility: North Dekalb Clinic
*Decatur
Population Group: Low Inc—Decatur Co
*Dodge
Population Group: Low Inc—Dodge Co
Facility: Dodge State Prison
Facility: Eastman Youth Development Campus
*Dooly
Population Group: Low Inc—Dooly Co
Dougherty
Service Area: East Albany
Service Area: South Albany
Douglas
Population Group: Low Inc—Douglasville
*Early
Population Group: Low Inc—Early
*Echols
Effingham
*Elbert
Population Group: Low Inc—Elbert Co
*Emanuel
*Fannin
Population Group: Low Inc—Fannin Co
Forsyth
Facility: Phillips State Prison
*Franklin
Population Group: Low Inc—Franklin Co
Fulton
Service Area: Atlanta/Southside
Service Area: Palmetto
Service Area: West Atlanta
Facility: Central Health Center
Facility: USP—Atlanta
*Gilmer
Population Group: Low Inc—Gilmer Co
*Glascock
*Gordon
Population Group: Low Inc—Gordon
*Grady
Population Group: Low Inc—Grady Co
*Greene
Population Group: Low Inc—Greene
*Habersham
Population Group: Low Inc—Habersham Co
*Hancock
Population Group: Low Inc—Hancock
*Haralson
Population Group: Low Inc—Haralson Co
Harris
*Hart
Population Group: Low Inc—Hart Co
*Heard
Houston
Population Group: Low Inc—Houston Co

PRIMARY MEDICAL CARE: Georgia
County Listing

Jackson
Population Group: Low Inc—Jackson Co
*Jasper
*Jeff Davis
Population Group: Low Inc—Jeff Davis Co
*Jefferson
*Jenkins
Population Group: Low Inc—Jenkins Co
*Johnson
Population Group: Low Inc—Johnson
Facility: Wrightsville Youth Develp Campus
*Lamar
Population Group: Low Inc—Lamar Co
*Lanier
Population Group: Low Inc—Lanier Co
Lee
*Liberty
*Lincoln
Population Group: Low Inc—Lincoln County
*Long
*Lumpkin
Population Group: Low Inc—Lumpkin Co
Madison
Population Group: Low Inc—Madison Co
*Marion
Population Group: Low Inc—Marion Co
McDuffie
Population Group: Low Inc—Mcduffie
*McIntosh
*Meriwether
Population Group: Low Inc—Meriwether
*Miller
Population Group: Low Inc—Miller
*Mitchell
Facility: Pelham Youth Development Campus
*Monroe
*Montgomery
Population Group: Low Inc—Montgomery/Wheeler
*Morgan
Population Group: Low Inc—Morgan Co
*Murray
Population Group: Low Inc—Murray
Muscogee/Columbus
Population Group: Low Inc—Central Muscogee
Newton
Population Group: Low Inc—Newton Co
*Oglethorpe
Paulding
Peach
Population Group: Low Inc—Peach Co
Pickens
Population Group: Low Inc—Pickens Co
*Pierce
Population Group: Low Inc—Pierce Co
*Pike
Population Group: Low Inc—Pike
*Polk
*Putnam
*Quitman
*Rabun
*Randolph
Population Group: Low Inc—Randolph Co
Richmond
Population Group: Low Inc—Central Augusta
*Schley
Population Group: Low Inc—Schley Co
*Screven
Spaulding

PRIMARY MEDICAL CARE: Georgia
County Listing

Population Group: Low Inc—Spalding Co
*Stewart
Service Area: Stewart/Webster
*Talbot
Population Group: Low Inc—Talbot
*Taliaferro
Population Group: Low Inc—Taliaferro
*Tattnall
Population Group: Low Inc—Tattnall
*Taylor
*Telfair
Population Group: Low Inc—Telfair Co
*Terrell
*Toombs
Population Group: Low Inc—Toombs Co
*Towns
Population Group: Low Inc—Towns Co
*Troup
*Turner
Population Group: Low Inc—Turner Co
Twiggs
*Union
Population Group: Low Inc—Union Co
Walker
Walton
Population Group: Low Inc—Walton Co
*Ware
Population Group: Low Inc—Ware Co
*Warren
*Washington
Population Group: Low Inc—Washington Co
*Wayne
Facility: FCI Jesup
*Webster
Service Area: Stewart/Webster
*Wheeler
Population Group: Low Inc—Montgomery/Wheeler
*White
Population Group: Low Inc—White Co
*Whitfield
Population Group: Low Inc—Whitfield Co
*Wilcox
Population Group: Low Inc—Wilcox Co
Facility: Wilcox State Prison
*Wilkes
*Wilkinson
*Worth
Population Group: Low Inc—Worth

PRIMARY MEDICAL CARE: Georgia
Service Area Listing

Service Area Name

Atlanta/Southside
County—Fulton
Parts:
C.T. 44
C.T. 46.95
C.T. 48
C.T. 49.95
C.T. 50
C.T. 52–53
C.T. 55.01–55.02
C.T. 56–58
C.T. 63–64
C.T. 67
C.T. 68.01–68.02
C.T. 69–73
East Albany
County—Dougherty
Parts:

PRIMARY MEDICAL CARE: Georgia
Service Area Listing

Service Area Name

C.T. 1–2
C.T. 101–102
C.T. 103.01–103.02
C.T. 107–111
Palmetto
County—Fulton
Parts:
C.T. 104
C.T. 105.04–105.06
South Albany
County—Dougherty
Parts:
C.T. 12
C.T. 14.01–14.02
C.T. 15
C.T. 106.01–106.02
South Decatur/Candler/Mcafee
County—De Kalb
Parts:
C.T. 205–209
C.T. 227
C.T. 231.01
C.T. 235.01–235.02
C.T. 236–237
Stewart/Webster
County—Stewart
County—Webster
West Atlanta
County—Fulton
Parts:
C.T. 8
C.T. 22–26
C.T. 36–41
C.T. 42.95
C.T. 43
C.T. 60–62
C.T. 66.02
C.T. 78.04
C.T. 80
C.T. 81.01–81.02
C.T. 82.01–82.02
C.T. 83.01–83.02
C.T. 84–85
C.T. 86.01–86.02
C.T. 87.01–87.02
Woodbine
County—Camden
Parts:
Woodbine Division

PRIMARY MEDICAL CARE: Georgia
Population Group Listing

Population Group

Low Inc—Appling
County—Appling
Parts:
Low Income
Low Inc—Bacon Co
County—Bacon
Parts:
Low Income
Low Inc—Baldwin
County—Baldwin
Parts:
Low Income
Low Inc—Barrow Co
County—Barrow
Parts:
Low Income
Low Inc—Bartow Co
County—Bartow

PRIMARY MEDICAL CARE: Georgia
Population Group Listing

Population Group

Parts:
Low Income
Low Inc—Ben Hill Co
County—Ben Hill
Parts:
Low Income
Low Inc—Berrien Co
County—Berrien
Parts:
Low Income
Low Inc—Bleckley Co
County—Bleckley
Parts:
Low Income
Low Inc—Bulloch
County—Bulloch
Parts:
Low Income
Low Inc—Burke Co
County—Burke
Parts:
Low Income
Low Inc—Butts Co
County—Butts
Parts:
Low Income
Low Inc—Candler Co
County—Candler
Parts:
Low Income
Low Inc—Central Augusta
County—Richmond
Parts:
C.T. 104
C.T. 105.04–105.09
C.T. 106
Low Inc—Central Marietta
County—Cobb
Parts:
C.T. 306–308
C.T. 309.02
Low Inc—Central Muscogee
County—Muscogee/Columbus
Parts:
C.T. 1
C.T. 13
C.T. 15
C.T. 18–20
C.T. 22–28
C.T. 29.01–29.02
C.T. 30–34
Low Inc—Charlton Co
County—Charlton
Parts:
Low Income
Low Inc—Chattahoochee
County—Chattahoochee
Parts:
Low Income
Low Inc—Clay
County—Clay
Parts:
Low Income
Low Inc—Clinch Co
County—Clinch
Parts:
Low Income
Low Inc—Cook
County—Cook
Parts:
Low Income
Low Inc—Crisp Co

PRIMARY MEDICAL CARE: Georgia
Population Group Listing

Population Group

County—Crisp
Parts:
Low Income
Low Inc—Dade
County—Dade
Parts:
Low Income
Low Inc—Decatur Co
County—Decatur
Parts:
Low Income
Low Inc—Dodge Co
County—Dodge
Parts:
Low Income
Low Inc—Dooly Co
County—Dooly
Parts:
Low Income
Low Inc—Douglasville
County—Douglas
Parts:
Low Income
Low Inc—Early
County—Early
Parts:
Low Income
Low Inc—Elbert Co
County—Elbert
Parts:
Low Income
Low Inc—Fannin Co
County—Fannin
Parts:
Low Income
Low Inc—Franklin Co
County—Franklin
Parts:
Low Income
Low Inc—Gilmer Co
County—Gilmer
Parts:
Low Income
Low Inc—Gordon
County—Gordon
Parts:
Low Income
Low Inc—Grady Co
County—Grady
Parts:
Low Income
Low Inc—Greene
County—Greene
Parts:
Low Income
Low Inc—Habersham Co
County—Habersham
Parts:
Low Income
Low Inc—Hancock
County—Hancock
Parts:
Low Income
Low Inc—Haralson Co
County—Haralson
Parts:
Low Income
Low Inc—Hart Co
County—Hart
Parts:
Low Income
Low Inc—Houston Co

PRIMARY MEDICAL CARE: Georgia
Population Group Listing

Population Group

County—Houston
Parts:
Low Income
Low Inc—Jackson Co
County—Jackson
Parts:
Low Income
Low Inc—Jeff Davis Co
County—Jeff Davis
Parts:
Low Income
Low Inc—Jenkins Co
County—Jenkins
Parts:
Low Income
Low Inc—Johnson
County—Johnson
Parts:
Low Income
Low Inc—Lamar Co
County—Lamar
Parts:
Low Income
Low Inc—Lanier Co
County—Lanier
Parts:
Low Income
Low Inc—Lincoln County
County—Lincoln
Parts:
Low Income
Low Inc—Lumpkin Co
County—Lumpkin
Parts:
Low Income
Low Inc—Madison Co
County—Madison
Parts:
Low Income
Low Inc—Marion Co
County—Marion
Parts:
Low Income
Low Inc—Mcduffie
County—McDuffie
Parts:
Low Income
Low Inc—Meriwether
County—Meriwether
Parts:
Low Income
Low Inc—Miller
County—Miller
Parts:
Low Income
Low Inc—Montgomery/Wheeler
County—Montgomery
Parts:
Low Income
County—Wheeler
Parts:
Low Income
Low Inc—Morgan Co
County—Morgan
Parts:
Low Income
Low Inc—Murray
County—Murray
Parts:
Low Income
Low Inc—N W Savannah
County—Chatham

PRIMARY MEDICAL CARE: Georgia
Population Group Listing

Population Group

Parts:
C.T. 1
C.T. 3
C.T. 6.01
C.T. 8–13
C.T. 15
C.T. 17–28
C.T. 32
C.T. 33.01–33.02
C.T. 36.01–36.02
C.T. 37
C.T. 44–45
C.T. 101.01
C.T. 105.01–105.02
C.T. 106.01
C.T. 106.03–106.04
Low Inc—Newton Co
County—Newton
Parts:
Low Income
Low Inc—Peach Co
County—Peach
Parts:
Low Income
Low Inc—Pembroke
County—Bryan
Parts:
Pembroke CCD
Low Inc—Pickens Co
County—Pickens
Parts:
Low Income
Low Inc—Pierce Co
County—Pierce
Parts:
Low Income
Low Inc—Pike
County—Pike
Parts:
Low Income
Low Inc—Randolph Co
County—Randolph
Parts:
Low Income
Low Inc—Schley Co
County—Schley
Parts:
Low Income
Low Inc—Spalding Co
County—Spaulding
Parts:
Low Income
Low Inc—Stone Mtn./Clarkston
County—De Kalb
Parts:
C.T. 219.05
C.T. 220–221
Low Inc—Talbot
County—Talbot
Parts:
Low Income
Low Inc—Taliaferro
County—Taliaferro
Parts:
Low Income
Low Inc—Tattnall
County—Tattnall
Parts:
Low Income
Low Inc—Telfair Co
County—Telfair
Parts:

PRIMARY MEDICAL CARE: Georgia
Population Group Listing

Population Group

Low Income
Low Inc—Toombs Co
County—Toombs
Parts:
Low Income
Low Inc—Towns Co
County—Towns
Parts:
Low Income
Low Inc—Turner Co
County—Turner
Parts:
Low Income
Low Inc—Union Co
County—Union
Parts:
Low Income
Low Inc—Walton Co
County—Walton
Parts:
Low Income
Low Inc—Ware Co
County—Ware
Parts:
Low Income
Low Inc—Washington Co
County—Washington
Parts:
Low Income
Low Inc—White Co
County—White
Parts:
Low Income
Low Inc—Whitfield Co
County—Whitfield
Parts:
Low Income
Low Inc—Wilcox Co
County—Wilcox
Parts:
Low Income
Low Inc—Worth
County—Worth
Parts:
Low Income

PRIMARY MEDICAL CARE: Georgia
Facility Listing

Facility Name

Central Health Center
County—Fulton
Dodge State Prison
County—Dodge
Eastman Youth Development Campus
County—Dodge
FCI Jesup
County—Wayne
Ga Diagnostic Prison
County—Butts
North Dekalb Clinic
County—De Kalb
Pelham Youth Development Campus
County—Mitchell
Phillips State Prison
County—Forsyth
Smyrna Health Center
County—Cobb
USP—Atlanta
County—Fulton
Wilcox State Prison
County—Wilcox

PRIMARY MEDICAL CARE: Georgia
Facility Listing

Facility Name
Wrightsville Youth Develp Campus
County—Johnson

PRIMARY MEDICAL CARE: Hawaii
County Listing

County Name
*Hawaii
Service Area: Hamakua
Service Area: Kau District
Service Area: Pahoa
Honolulu
Population Group: Low Inc—Kokua/Kalihi-Palama
*Maui/Kalawao
Service Area: Hana/Haiku
Service Area: Island Of Molokai

PRIMARY MEDICAL CARE: Hawaii
Service Area Listing

Service Area Name
Hamakua
County—Hawaii
Parts:
C.T. 219–221
Hana/Haiku
County—Maui/Kalawao
Parts:
C.T. 301–302
Island Of Molokai
Parts:
C.T. 319
County—Maui/Kalawao
Parts:
C.T. 317–318
Kau District
County—Hawaii
Parts:
C.T. 212
Pahoa
County—Hawaii
Parts:
C.T. 211

PRIMARY MEDICAL CARE: Hawaii
Population Group Listing

Population Group
Low Inc—Kokua/Kalihi-Palama
County—Honolulu
Parts:
C.T. 51–57
C.T. 57.99–58.00
C.T. 59–61
C.T. 62.01–62.02
C.T. 63.01–63.02
C.T. 64.01–64.02
C.T. 65–66

PRIMARY MEDICAL CARE: Idaho
County Listing

County Name
Ada
Facility: Idaho State Pen. (Max/Med Units)
*Adams
*Bannock
Service Area: South Bannock Division
*Benewah
Population Group: Low Inc—Benewah Co
*Bingham

PRIMARY MEDICAL CARE: Idaho
County Listing

County Name
Population Group: Low Inc/MFW—Bingham Co
*Blaine
Service Area: Carey
*Boise
*Bonner
Service Area: Clark Fork
Service Area: Priest River
*Bonneville
Service Area: Swan Valley
*Boundary
*Butte
Service Area: Arco/Mackay
*Camas
Canyon
Population Group: Low Inc/MFW—Canyon Co
*Caribou
*Cassia
Population Group: Low Inc/MFW—Cassia Co
*Clark
*Clearwater
Service Area: Elk River
Service Area: Pierce/Weippe
*Custer
Service Area: Arco/Mackay
Service Area: Stanley/Challis
*Elmore
*Franklin
*Fremont
*Gem
Population Group: Low Inc/MFW—Gem Co
*Gooding
*Idaho
Service Area: Elk City
Service Area: Riggins
*Jefferson
*Jerome
Population Group: Low Inc/MFW—Jerome Co
*Kootenai
Population Group: Low Inc—Kootenai Co
*Latah
Population Group: Low Inc—Latah Co
*Lemhi
*Lewis
Service Area: Winchester
*Lincoln
*Madison
Population Group: Low Inc/MFW—Madison Co
*Minidoka
Population Group: Low Inc/MFW—Minidoka Co
*Oneida
*Owyhee
*Payette
*Power
Population Group: Low Inc/MFW—Power Co
*Teton
*Twin Falls
Population Group: Low Inc/MFW—Twin Falls Co
*Valley
Service Area: Cascade
*Washington

PRIMARY MEDICAL CARE: Idaho
Service Area Listing

Service Area Name
Arco/Mackay
County—Butte
County—Custer
Parts:
Mackay Division
Carey
County—Blaine
Parts:
Carey Division
Cascade
County—Valley
Parts:
C.T. 9701
Clark Fork
County—Bonner
Parts:
Clark Fork Division
Elk City
County—Idaho
Parts:
Elk City Division
Elk River
County—Clearwater
Parts:
Elk River Division
Pierce/Weippe
County—Clearwater
Parts:
Pierce-Headquarters Division
Weippe Division
Priest River
County—Bonner
Parts:
Blanchard-Glengary Division
Priest River Division
Riggins
County—Idaho
Parts:
Riggins Division
South Bannock Division
County—Bannock
Parts:
South Bannock Division
Stanley/Challis
County—Custer
Parts:
Challis Division
Stanley Division
Swan Valley
County—Bonneville
Parts:
Swan Valley Division
Winchester
County—Lewis
Parts:
Winchester Division

PRIMARY MEDICAL CARE: Idaho
Population Group Listing

Population Group
Low Inc—Benewah Co
County—Benewah
Parts:
Low Income
Low Inc—Kootenai Co
County—Kootenai
Parts:
Low Income
Low Inc—Latah Co
County—Latah
Parts:

PRIMARY MEDICAL CARE: Idaho
Population Group Listing

Population Group

Low Income
Low Inc/MFW—Bingham Co
County—Bingham
Parts:
Low Income/MFW
Low Inc/MFW—Canyon Co
County—Canyon
Parts:
Low Income/MFW
Low Inc/MFW—Cassia Co
County—Cassia
Parts:
Low Income/MFW
Low Inc/MFW—Gem Co
County—Gem
Low Inc/MFW—Jerome Co
County—Jerome
Parts:
Low Income/MFW
Low Inc/MFW—Madison Co
County—Madison
Parts:
Low Income/MFW
Low Inc/MFW—Minidoka Co
County—Minidoka
Parts:
Low Income/MFW
Low Inc/MFW—Power Co
County—Power
Parts:
Low Income/MFW
Low Inc/MFW—Twin Falls Co
County—Twin Falls
Parts:
Low Income/MFW

PRIMARY MEDICAL CARE: Idaho
Facility Listing

Facility Name

Idaho State Pen. (Max/Med Units)
County—Ada

PRIMARY MEDICAL CARE: Illinois
County Listing

County Name

*Alexander
Service Area: Cairo
*Bond
Facility: Greenville Corr Inst
*Brown
*Calhoun
*Carroll
*Cass
Clinton (g)
Facility: Centralia Corr Ctr
Cook
Service Area: Auburn Gresham
Service Area: Austin
Service Area: Humboldt Park
Service Area: Logan Square
Service Area: New City
Service Area: Roseland/Pullman/Burnside
Service Area: S Lawndale
Service Area: South Chicago/Avalon Park
Service Area: South Deering
Service Area: West Englewood/Englewood
Population Group: Hmlss—Uptown/Near North Side/Loop
Facility: Alivio Med Ctr
Facility: Altgeld Health Ctr

PRIMARY MEDICAL CARE: Illinois
County Listing

County Name

Facility: Children's Primary Care Serv
Facility: Cicero Health Center
Facility: Community Health Center
Facility: Cook Co (Sengstacke)
Facility: Cook Co Dept Of Corr Complex
Facility: Erie Family HC (Teens)
Facility: Erie Family HC (West Town)
Facility: Erie Family HC (Humboldt Park)
Facility: Fantus Outpt Clinic—Cook Co Hosp
Facility: Friend Family Health Ctr
Facility: Hawthorne Works Med Ctr
Facility: Infant Welfare Society
Facility: Ingalls Community Care Ctr
Facility: Jackson Pk Hosp—Senior Health Clinic
Facility: Kedzie Plaza Med Ctr
Facility: Kling Prof Office Bldg
Facility: Komed/Holman Health Center
Facility: Lawndale Christian Hlth Ctr
Facility: Lawndale Plaza Medical Ctr
Facility: Lincoln Memorial Health Ctr
Facility: Lincoln Med Ctr
Facility: Lower West Neighborhood Hlth Ctr
Facility: Markham Medical Clinic
Facility: Mile Square Health Center
Facility: Near South Health Ctr
Facility: PCC Community Wellness Ctr
Facility: Pediatric Clinic—U Of Il
Facility: Pediatric Follow-Up Clinic
Facility: Pilsen Med Ctr
Facility: Sinai Doctors Med Ctr
Facility: West Side Health Ctr
Facility: West Town Neighborhood Hlth Ctr
Facility: Westside Family Health Ctr
Facility: Winfield Moody Health Ctr
Facility: Woodlawn Health Ctr
*Cumberland
*Edgar
*Fayette
*Franklin
*Gallatin
*Hamilton
Population Group: Low Inc—Hamilton Co
*Hardin
Service Area: Hardin/Pope
*Iroquois
Service Area: Hoopeston
*Jasper
*Jo Daviess
Service Area: Stockton/Warren
*Johnson (g)
Facility: Shawnee Corr Ctr
Kane
Service Area: Carpentersville City
Service Area: Central Aurora
*Knox
Facility: Hill Corr Ctr
*Lawrence
Population Group: Low Inc—Lawrence Co
*Lee
Service Area: Ashton
Macon
Population Group: Low Inc—Decatur City
*Macoupin
Madison
Service Area: East St. Louis
Population Group: Low Inc—Alton/Wood River
Facility: Koch Family Health Ctr
*Mason
*Massac

PRIMARY MEDICAL CARE: Illinois
County Listing

County Name

Population Group: Low Inc—Massac Co
Ogle
Service Area: Polo
*Perry
Population Group: Low Inc—Perry Co
*Pope
Service Area: Hardin/Pope
*Pulaski
Service Area: Cairo
Rock Island
Population Group: Low Inc—Greater Davenport (IA/IL)
Population Group: Low Inc—Eastern Rock Island Co
*Scott
*Shelby
Population Group: Low Inc—Shelby Co
St Clair
Service Area: East St. Louis
*Stark
Tazewell
Facility: FCI Pekin
*Vermilion
Service Area: Hoopeston
*Washington
Service Area: Nashville
*White
Population Group: Low Inc—White Co
Will
Population Group: Low Inc—Eastside Joliet
Facility: Joliet Corr Inst
*Williamson
Facility: USP Marion
Winnebago
Service Area: Rockford Westside

PRIMARY MEDICAL CARE: Illinois
Service Area Listing

Service Area Name

Ashton
County—Lee
Parts:
Alto Township
Amboy Township
Ashton Township
Bradford Township
Brooklyn Township
China Township
Lee Center Township
May Township
Reynolds Township
Sublette Township
Viola Township
Willow Creek Township
Wyoming Township
Auburn Gresham
County—Cook
Parts:
C.T. 7101–7115
C.T. 7301–7307
Austin
County—Cook
Parts:
C.T. 2501–2524
Cairo
County—Alexander
County—Pulaski
Carpentersville City
County—Kane
Parts:
C.T. 8502.01–8502.02

PRIMARY MEDICAL CARE: Illinois
Service Area Listing

Service Area Name

C.T. 8503.01–8503.02
Central Aurora
County—Kane
Parts:
C.T. 8529.04
C.T. 8532–8538
East St. Louis
County—Madison
Parts:
C.T. 4007
County—St Clair
Parts:
C.T. 5004–5006
C.T. 5009–5014
C.T. 5021–5022
C.T. 5024.01
C.T. 5024.03–5024.04
C.T. 5025
C.T. 5027–5030
C.T. 5041
C.T. 5042.01
C.T. 5044
Hardin/Pope
County—Hardin
County—Pope
Hoopeston
County—Iroquois
Parts:
Fountain Creek Township
Lovejoy Township
Prairie Green Township
County—Vermilion
Parts:
Butler Township
Grant Township
Middlefork Township
Ross Township
South Ross Township
Humboldt Park
County—Cook
Parts:
C.T. 2301–2318
Logan Square
County—Cook
Parts:
C.T. 2001–2006
C.T. 2201–2229
Nashville
County—Washington
Parts:
Beaucoup Township
Bolo Township
Covington Township
Du Bois Township
Johannisburg Township
Lively Grove Township
Nashville Township
Oakdale Township
Okawville Township
Pilot Knob Township
Plum Hill Township
Venedy Township
New City
County—Cook
Parts:
C.T. 3701–3704
C.T. 6101–6122
Polo
County—Ogle
Parts:
Brookville Township
Buffalo Township

PRIMARY MEDICAL CARE: Illinois
Service Area Listing

Service Area Name

Eagle Point Township
Forreston Township
Leaf River Township
Lincoln Township
Maryland Township
Mount Morris Township
Pine Creek Township
Woosung Township
Rockford Westside
County—Winnebago
Parts:
C.T. 10–12
C.T. 21
C.T. 24–29
C.T. 32
Roseland/Pullman/Burnside
County—Cook
Parts:
C.T. 4701
C.T. 4901–4914
C.T. 5001–5003
S Lawndale
County—Cook
Parts:
C.T. 3001–3020
South Chicago/Avalon Park
County—Cook
Parts:
C.T. 4501–4503
C.T. 4601–4610
South Deering
County—Cook
Parts:
C.T. 5101–5105
Stockton/Warren
County—Jo Daviess
Parts:
Apple River Township
Berreman Township
Derinda Township
Nora Township
Pleasant Valley Township
Rush Township
Stockton Township
Thompson Township
Wards Grove Township
Warren Township
Woodbine Township
West Englewood/Englewood
County—Cook
Parts:
C.T. 6701–6720
C.T. 6801–6814

PRIMARY MEDICAL CARE: Illinois
Population Group Listing

Population Group

Hmlss—Uptown/Near North Side/Loop 1
County—Cook
Parts:
Edgewater (C.T. 301–309)
Lakeview(C.T. 601–634)
Lincoln Park(C.T.701–720
Loop (C.T. 3201–3206)
Near N Side(C.T.801–819
Uptown(C.T. 310–321)
Low Inc—Alton/Wood River
County—Madison
Parts:
Alton Twp
Wood River Twp

PRIMARY MEDICAL CARE: Illinois
Population Group Listing

Population Group

Low Inc—Decatur City
County—Macon
Parts:
C.T. 1–3
C.T. 4.97–4.98
C.T. 5.98
C.T. 6–9
C.T. 16
C.T. 20
Low Inc—Eastern Rock Island Co
County—Rock Island
Parts:
C.T. 202–203
C.T. 206–210
C.T. 213–215
Low Inc—Eastside Joliet
County—Will
Parts:
C.T. 8812–8813
C.T. 8820–8822
C.T. 8824–8825
C.T. 8830
Low Inc—Greater Davenport (IA/IL)
County—Rock Island
Parts:
C.T. 216–217
C.T. 222–224
C.T. 226–228
C.T. 233–237
Low Inc—Hamilton Co
County—Hamilton
Parts:
Low Income
Low Inc—Lawrence Co
County—Lawrence
Parts:
Low Income
Low Inc—Massac Co
County—Massac
Parts:
Low Income
Low Inc—Perry Co
County—Perry
Parts:
Low Income
Low Inc—Shelby Co
County—Shelby
Parts:
Low Income
Low Inc—White Co
County—White
Parts:
Low Income

PRIMARY MEDICAL CARE: Illinois
Facility Listing

Facility Name

Alivio Med Ctr
County—Cook
Altgeld Health Ctr
County—Cook
Centralia Corr Ctr
County—Clinton
Children's Primary Care Serv
County—Cook
Cicero Health Center
County—Cook
Community Health Center
County—Cook
Cook Co (Sengstacke)
County—Cook

PRIMARY MEDICAL CARE: Illinois
Facility Listing

Facility Name

Cook Co Dept Of Corr Complex
County—Cook
Erie Family HC (Humboldt Park)
County—Cook
Erie Family HC (Teens)
County—Cook
Erie Family HC (West Town)
County—Cook
Fantus Outpt Clinic—Cook Co Hosp
County—Cook
Friend Family Health Ctr
County—Cook
FCI Pekin
County—Tazewell
Greenville Corr Inst
County—Bond
Hawthorne Works Med Ctr
County—Cook
Hill Corr Ctr
County—Knox
Infant Welfare Society
County—Cook
Ingalls Community Care Ctr
County—Cook
Jackson Pk Hosp—Senior Health Clinic
County—Cook
Joliet Corr Inst
County—Will
Kedzie Plaza Med Ctr
County—Cook
Kling Prof Office Bldg
County—Cook
Koch Family Health Ctr
County—Madison
Komed/Holman Health Center
County—Cook
Lawndale Christian Hlth Ctr
County—Cook
Lawndale Plaza Medical Ctr
County—Cook
Lincoln Med Ctr
County—Cook
Lincoln Memorial Health Ctr
County—Cook
Lower West Neighborhood Hlth Ctr
County—Cook
Markham Medical Clinic
County—Cook
Mile Square Health Center
County—Cook
Near South Health Ctr
County—Cook
PCC Community Wellness Ctr
County—Cook
Pediatric Clinic—U Of Il
County—Cook
Pediatric Follow-Up Clinic
County—Cook
Pilsen Med Ctr
County—Cook
Shawnee Corr Ctr
County—Johnson
Sinai Doctors Med Ctr
County—Cook
USP Marion
County—Williamson
West Side Health Ctr
County—Cook
West Town Neighborhood Hlth Ctr
County—Cook
Westside Family Health Ctr
County—Cook

PRIMARY MEDICAL CARE: Illinois
Facility Listing

Facility Name

Winfield Moody Health Ctr
County—Cook
Woodlawn Health Ctr
County—Cook

PRIMARY MEDICAL CARE: Indiana
County Listing

County Name

*Benton
*Blackford
*Brown
*Carroll
Population Group: Low Inc—Carroll Co
Clinton
Population Group: Low Inc—Clinton Co
*Crawford
*Daviess
*Grant
Population Group: Low Inc—Grant Co
*Henry
Population Group: Low Inc—Henry Co
Howard
Population Group: Low Inc—Inner City Kokomo
*Jasper
Population Group: Low Inc—Jasper Co
*Jennings
*Knox
Facility: Wabash Valley Clinic
*La Porte
Population Group: Low Inc—La Porte Co
Facility: Indiana State Prs
*Lagrange
Lake
Service Area: East Chicago
Service Area: Gary
Marion
Service Area: Forest Manor (Indianapolis)
Service Area: Highland-Brookside (Indianapolis)
Service Area: Near North Side (Indianapolis)
Service Area: South Central Indianapolis
Service Area: Southwest Indianapolis
*Newton
*Ohio
*Owen
*Perry
Population Group: Low Inc—Perry
Facility: Branchville Training Ctr
*Pike
*Putnam
Facility: Indiana State Farm
*Randolph
*Ripley
Service Area: Osgood/Versailles
*Rush
Population Group: Low Inc—Rush Co
Scott
Population Group: Low Inc—Scott Co
*Spencer
St Joseph
Service Area: Southwest South Bend
*Starke
*Steuben
Vanderburgh
Population Group: Homeless—Evansville
Vigo
Facility: Terre Haute Corr Inst
*Warren
*Washington

PRIMARY MEDICAL CARE: Indiana
County Listing

County Name

Population Group: Low Inc—Washington Co

PRIMARY MEDICAL CARE: Indiana
Service Area Listing

Service Area Name

East Chicago
County—Lake
Parts:
C.T. 301–303
C.T. 303.98
C.T. 304
C.T. 304.98
C.T. 305–310
Forest Manor (Indianapolis)
County—Marion
Parts:
C.T. 3225–3227
C.T. 3505–3508
C.T. 3523
Gary
County—Lake
Parts:
C.T. 101
C.T. 102.98
C.T. 103–134
C.T. 411–412
C.T. 413.01
Highland-Brookside (Indianapolis)
County—Marion
Parts:
C.T. 3526–3527
C.T. 3544–3545
C.T. 3547–3551
Near North Side (Indianapolis)
County—Marion
Parts:
C.T. 3517
C.T. 3519
C.T. 3521
C.T. 3528
C.T. 3531–3532
Osgood/Versailles
County—Ripley
Parts:
Brown Township
Center Township
Johnson Township
Otter Creek Township
Shelby Township
Washington Township
South Central Indianapolis
County—Marion
Parts:
C.T. 3556–3557
C.T. 3559
C.T. 3562
C.T. 3569–3572
C.T. 3578–3580
Southwest Indianapolis
County—Marion
Parts:
C.T. 3414–3415
C.T. 3417
C.T. 3424–3426
C.T. 3563–3564
C.T. 3581
Southwest South Bend
County—St Joseph
Parts:
C.T. 6

PRIMARY MEDICAL CARE: Indiana
Service Area Listing

Service Area Name

C.T. 17–24
C.T. 27
C.T. 29–30

PRIMARY MEDICAL CARE: Indiana
Population Group Listing

Population Group

Homeless—Evansville 1
County—Vanderburgh
Parts:
Evansville City
Low Inc—Carroll Co
County—Carroll
Parts:
Low Income
Low Inc—Clinton Co
County—Clinton
Parts:
Low Income
Low Inc—Grant Co
County—Grant
Parts:
Low Income
Low Inc—Henry Co
County—Henry
Parts:
Low Income
Low Inc—Inner City Kokomo
County—Howard
Parts:
C.T. 1–2
C.T. 4–5
C.T. 9
C.T. 12
Low Inc—Jasper Co
County—Jasper
Parts:
Low Income
Low Inc—La Porte Co
County—La Porte
Parts:
Low Income
Low Inc—Perry
County—Perry
Parts:
Low-Income
Low Inc—Rush Co
County—Rush
Parts:
Low Income
Low Inc—Scott Co
County—Scott
Parts:
Low Income
Low Inc—Washington Co
County—Washington
Parts:
Low Income

PRIMARY MEDICAL CARE: Indiana
Facility Listing

Facility Name

Branchville Training Ctr
County—Perry
Indiana State Farm
County—Putnam
Indiana State Prs
County—La Porte
Terre Haute Corr Inst
County—Vigo

PRIMARY MEDICAL CARE: Indiana
Facility Listing

Facility Name

Wabash Valley Clinic
County—Knox

PRIMARY MEDICAL CARE: Iowa
County Listing

County Name

*Adair
*Benton
*Boone
Service Area: Dayton/Gowrie
Bremer
Service Area: Sumner/Tripoli
*Buchanan
*Butler
*Calhoun
Service Area: Dayton/Gowrie
Service Area: Lake City
Service Area: Manson
*Carroll
Service Area: Lake City
*Cedar
Service Area: Lowden/Lost Nation
*Clinton
Service Area: Lowden/Lost Nation
Dallas
Service Area: Redfield
*Franklin
Population Group: Low Inc—Franklin Co
*Greene
Service Area: Dayton/Gowrie
Service Area: Lake City
*Guthrie
Service Area: Redfield
*Hamilton
Service Area: Dayton/Gowrie
*Henry
Service Area: Keosauqua
Facility: Mt. Pleasant Corr Fac
*Ida
*Jackson
Service Area: Lowden/Lost Nation
*Jefferson
Service Area: Keosauqua
*Kossuth
*Lee
Service Area: Keosauqua
*Louisa
*Madison
Service Area: Redfield
*Mitchell
*Pocahontas
Service Area: Manson
Pottawattamie
Service Area: Oakland
Population Group: Low Inc—W Pottawattamie Co
*Sac
Scott
Service Area: Lowden/Lost Nation
Population Group: Low Inc—Greater Davenport (IA/IL)
*Sioux
Service Area: Hawarden/Ireton
*Tama
*Taylor
*Van Buren
Service Area: Keosauqua
*Webster
Service Area: Dayton/Gowrie
Service Area: Manson
Woodbury

PRIMARY MEDICAL CARE: Iowa
County Listing

County Name

Population Group: Low Inc—NW Sioux City

PRIMARY MEDICAL CARE: Iowa
Service Area Listing

Service Area Name

Dayton/Gowrie
County—Boone
Parts:
Dodge Township
Grant Township
Pilot Mound Township
County—Calhoun
Parts:
Reading Township
County—Greene
Parts:
Dawson Township
Paton Township
County—Hamilton
Parts:
Marion Township
Webster Township
County—Webster
Parts:
Burnside Township
Clay Township
Dayton Township
Gowrie Township
Hardin Township
Lost Grove Township
Roland Township
Sumner Township
Webster Township
Yell Township
Hawarden/Ireton
County—Sioux
Parts:
Buncombe Township
Center Township
Eagle Township
Garfield Township
Logan Township
Plato Township
Reading Township
Sherman Township
Washington Township
Keosauqua
County—Henry
Parts:
Jackson Township
Salem Township
County—Jefferson
Parts:
Cedar Township
Des Moines Township
Liberty Township
Round Prairie Township
County—Lee
Parts:
Cedar Township
Franklin Township
Harrison Township
Marion Township
Van Buren Township
County—Van Buren
Lake City
County—Calhoun
Parts:
Calhoun Township
Cedar Township

PRIMARY MEDICAL CARE: Iowa
Service Area Listing

Service Area Name

Elm Grove Township
Garfield Township
Jackson Township
Lake Creek Township
Lake City City
Logan Township
Union Township
Williams Township
County—Carroll
Parts:
Jasper Township
Kniest Township
Sheridan Township
Wheatland Township
County—Greene
Parts:
Cedar Township
Highland Township
Lowden/Lost Nation
County—Cedar
Parts:
Inland Township
Massillon Township
Springfield Township
County—Clinton
Parts:
Liberty Township
Sharon Township
Spring Rock Township
County—Jackson
Parts:
Monmouth Township
County—Scott
Parts:
Liberty Township
Manson
County—Calhoun
Parts:
Butler Township
Center Township
Greenfield Township
Lincoln Township
Sherman Township
Twin Lakes Township
County—Pocahontas
Parts:
Bellville Township
Lizard Township
County—Webster
Parts:
Jackson Township
Johnson Township
Oakland
County—Pottawattamie
Parts:
Belknap Township
Carson Township
Center Township
Grove Township
James Township
Knox Township
Layton Township
Lincoln Township
Macedonia Township
Pleasant Township
Silver Creek Township
Valley Township
Washington Township
Waveland Township
Wright Township
Redfield
County—Dallas

PRIMARY MEDICAL CARE: Iowa
Service Area Listing

Service Area Name

Parts:
Linn Township
Union Township
County—Guthrie
Parts:
Penn Township
Stuart Township
County—Madison
Parts:
Madison Township
Penn Township
Sumner/Tripoli
County—Bremer
Parts:
Dayton Township
Frederika Township
Fremont Township
Le Roy Township
Sumner City
Sumner No. 2 Township

PRIMARY MEDICAL CARE: Iowa
Population Group Listing

Population Group

Low Inc—Franklin Co
County—Franklin
Parts:
Low Income
Low Inc—Greater Davenport (IA/IL)
County—Scott
Parts:
C.T. 105–117
C.T. 122–123
C.T. 130
C.T. 135
Low Inc—NW Sioux City
County—Woodbury
Parts:
C.T. 7–8
C.T. 10
C.T. 12–16
Low Inc—W Pottawattamie Co
County—Pottawattamie
Parts:
Boomer Twp
Crescent Twp
Garner Twp
Hardin Twp
Hazel Dell Twp
Kane Twp
Keg Creek Twp
Lake Twp
Lewis Twp
Minden Twp
Neola Twp
Norwalk Twp
Rockford Twp
York Twp

PRIMARY MEDICAL CARE: Iowa
Facility Listing

Facility Name

Mt. Pleasant Corr Fac
County—Henry

PRIMARY MEDICAL CARE: Kansas
County Listing

County Name

*Atchison
Population Group: Low Inc—Atchison Co
*Barton
Population Group: Low Inc—Barton Co
*Chautauqua
*Cherokee
*Cheyenne
*Clark
Service Area: Clark/Meade
*Cloud
Population Group: Low Inc—Cloud Co
*Comanche
*Crawford
Population Group: Low Inc—Crawford Co
*Doniphan
*Edwards
*Elk
*Finney
Population Group: Low Inc—Finney Co
*Hamilton
*Haskell
*Hodgeman
*Jewell
*Kearny
*Kiowa
*Lane
Population Group: Low Inc—Lane Co
Leavenworth
Facility: USP Leavenworth
*Lincoln
*Linn
*Lyon
Population Group: Low Inc—Lyon Co
*Meade
Service Area: Clark/Meade
*Osborne
*Pawnee
*Phillips
*Pratt
*Rawlins
*Rooks
*Rush
Population Group: Low Inc—Rush
*Russell
*Sheridan
*Smith
Population Group: Low Inc—Smith Co
*Stevens
*Wallace
*Washington
*Wichita

PRIMARY MEDICAL CARE: Kansas
Service Area Listing

Service Area Name

Clark/Meade
County—Clark
County—Meade

PRIMARY MEDICAL CARE: Kansas
Population Group Listing

Population Group

Low Inc—Atchison Co
County—Atchison
Parts:
Low Income
Low Inc—Barton Co
County—Barton
Parts:
Low Income
Low Inc—Cloud Co

PRIMARY MEDICAL CARE: Kansas
Population Group Listing

Population Group

County—Cloud
Parts:
Low Income
Low Inc—Crawford Co
County—Crawford
Parts:
Low Income
Low Inc—Finney Co
County—Finney
Parts:
Low Income
Low Inc—Lane Co
County—Lane
Parts:
Low Income
Low Inc—Lyon Co
County—Lyon
Parts:
Low Income
Low Inc—Rush
County—Rush
Parts:
Low Income
Low Inc—Smith Co
County—Smith
Parts:
Low Income

PRIMARY MEDICAL CARE: Kansas
Facility Listing

Facility Name

USP Leavenworth
County—Leavenworth

PRIMARY MEDICAL CARE: Kentucky
County Listing

County Name

*Adair
*Allen
*Anderson
Population Group: Low Inc—Anderson
*Ballard
*Bath
Population Group: Low Inc—Bath
*Bell
Service Area: Williamsburg/Saxton
*Bracken
*Breathitt
*Breckinridge
Population Group: Low Inc—Breckinridge Co
Bullitt
*Butler
Campbell
Population Group: Low Inc—Inner City Newport
*Carlisle
*Carroll
Carter
*Casey
Clark
Population Group: Low Inc—Clark
*Clay (g)
Facility: FCI Manchester
*Crittenden
*Cumberland
Population Group: Low Inc—Cumberland Co
Daviess
Population Group: Low Inc—Daviess

PRIMARY MEDICAL CARE: Kentucky
County Listing

County Name

*Edmonson
*Elliott
*Estill
Population Group: Low Inc—Estill
Fayette
Population Group: Low Inc—N Central Lexington
*Fleming
Population Group: Low Inc—Fleming
*Floyd
Population Group: Low Inc—Mud Creek
*Gallatin
*Garrard
*Grayson
Population Group: Low Inc—Grayson Co
*Green
Population Group: Low Inc—Green Co
*Hancock
*Harlan
Population Group: Low Inc—Harlan
Facility: Clover Fork Clinic
*Hart
*Henry
*Hickman
*Jackson
Jefferson
Population Group: Low Inc—West End Louisville
*Johnson
Population Group: Low Inc—Johnson Co
*Knott
Population Group: Low Inc—Knott
*Knox
*Larue
Population Group: Low Inc—Larue
*Laurel
Population Group: Low Inc—Laurel
*Lawrence
Population Group: Low Inc—Lawrence Co
*Leslie
Population Group: Low Inc—Leslie Co
*Lewis
*Livingston
Population Group: Low Inc—Livingston
*Lyon
Facility: Ky. State Pen.
Madison
Population Group: Low Inc—Madison Co
*Magoffin
*Marion
Population Group: Low Inc—Marion
*Martin
*McCreary
Population Group: Low Inc—Mccreary
*McLean
*Meade
*Menifee
*Metcalfe
*Morgan
Population Group: Low Inc—Morgan Co
Facility: Eastern Ky. Corr. Complex
*Muhlenberg
*Nicholas
*Ohio
Oldham
Facility: Ky. State Ref.
*Owen
*Owsley
*Pendleton
*Perry
Service Area: Buckhorn
Population Group: Low Inc—Hazard

PRIMARY MEDICAL CARE: Kentucky
County Listing

County Name

*Powell
*Robertson
*Rockcastle
Population Group: Low Inc—Rockcastle
*Simpson
*Spencer
*Todd
*Trigg
*Trimble
*Union
Population Group: Low Inc—Union
*Wayne
Population Group: Low Inc—Wayne Co
*Webster
Population Group: Low Inc—Webster
*Whitley
Service Area: Williamsburg/Saxton
*Wolfe

PRIMARY MEDICAL CARE: Kentucky
Service Area Listing

Service Area Name

Buckhorn
County—Perry
Parts:
Buckhorn Division
Williamsburg/Saxton
County—Bell
Parts:
Pruden-Fonde Division
County—Whitley
Parts:
Pearl Division
Saxton Division
Siler Division
Williamsburg Division

PRIMARY MEDICAL CARE: Kentucky
Population Group Listing

Population Group

Low Inc—Anderson
County—Anderson
Parts:
Low Income
Low Inc—Bath
County—Bath
Parts:
Low Income
Low Inc—Breckinridge Co
County—Breckinridge
Parts:
Low Income
Low Inc—Clark
County—Clark
Parts:
Low Income
Low Inc—Cumberland Co
County—Cumberland
Parts:
Low Income
Low Inc—Daviess
County—Daviess
Parts:
Low Income
Low Inc—Estill
County—Estill
Parts:
Low Income
Low Inc—Fleming
County—Fleming

PRIMARY MEDICAL CARE: Kentucky
Population Group Listing

Population Group

Parts:
Low Income
Low Inc—Grayson Co
County—Grayson
Parts:
Low Income
Low Inc—Green Co
County—Green
Parts:
Low Income
Low Inc—Harlan
County—Harlan
Parts:
Low Income
Low Inc—Hazard
County—Perry
Parts:
Defiance-Vigor CCD
Hazard CCD
Krypton CCD
Viper CCD
Low Inc—Inner City Newport
County—Campbell
Parts:
C.T. 501–506
Low Inc—Johnson Co
County—Johnson
Parts:
Low Income
Low Inc—Knott
County—Knott
Parts:
Low Income
Low Inc—Larue
County—Larue
Parts:
Low Income
Low Inc—Laurel
County—Laurel
Parts:
Low Income
Low Inc—Lawrence Co
County—Lawrence
Parts:
Low Income
Low Inc—Leslie Co
County—Leslie
Parts:
Low Income
Low Inc—Livingston
County—Livingston
Parts:
Low Income
Low Inc—Madison Co
County—Madison
Parts:
Low Income
Low Inc—Marion
County—Marion
Parts:
Low Income
Low Inc—Mccreary
County—McCreary
Parts:
Low Income
Low Inc—Morgan Co
County—Morgan
Parts:
Low Income
Low Inc—Mud Creek
County—Floyd
Parts:

PRIMARY MEDICAL CARE: Kentucky
Population Group Listing

Population Group

McDowell CCD
Mud Creek CCD
Wheelwr-Weeksbury CCD
Low Inc—N Central Lexington
County—Fayette
Parts:
C.T. 1–5
C.T. 8–14
C.T. 18–19
C.T. 38.01
Low Inc—Rockcastle
County—Rockcastle
Parts:
Low Income
Low Inc—Union
County—Union
Parts:
Low Income
Low Inc—Wayne Co
County—Wayne
Parts:
Low Income
Low Inc—Webster
County—Webster
Parts:
Low-Income
Low Inc—West End Louisville
County—Jefferson
Parts:
C.T. 1–18
C.T. 20–24
C.T. 27–28
C.T. 30
C.T. 34–35

PRIMARY MEDICAL CARE: Kentucky
Facility Listing

Facility Name

Clover Fork Clinic 1
County—Harlan
Eastern Ky. Corr. Complex
County—Morgan
FCI Manchester
County—Clay
Ky. State Pen.
County—Lyon
Ky. State Ref.
County—Oldham

PRIMARY MEDICAL CARE: Louisiana
Parish Listing

Parish Name

Acadia
Population Group: Low Inc—Acadia Co
*Allen (g)
Facility: FCI Oakdale
*Ascension
Service Area: Ascension/Northeast Iberville
Service Area: Donaldsonville
*Assumption
*Avoyelles
*Bienville
Calcasieu
Service Area: Dequincy
Service Area: North Lake Charles
Service Area: Vinton
Facility: Moss Reg Med Ctr Outpt Clinic
*Caldwell
*Cameron
*Claiborne

PRIMARY MEDICAL CARE: Louisiana
Parish Listing

Parish Name

Population Group: Low Inc—Claiborne
*Concordia
*De Soto
East Baton Rouge
Population Group: Low Inc—Eden Park
*East Carroll
*East Feliciana
*Grant
*Iberia
Population Group: Low Inc—Iberia Parish
*Iberville
Service Area: Ascension/Northeast Iberville
*Jackson
*Jefferson Davis
Population Group: Low Inc—SW Jefferson Davis Parish
*Lasalle
*Lincoln
Livingston
Service Area: Livingston Service Area
*Madison
*Natchitoches
Service Area: NW Natchitoches Co
Orleans
Service Area: Lower 9th Ward
Population Group: Low Inc—Midtown
Population Group: Low Inc—Gert Town
Population Group: Low Inc—Gentilly Woods
Population Group: Low Inc—Irish Channel/Central City
Population Group: Medicaid Eligible—Algiers/Fisher
Facility: Health Care For Homeless Clinic
Ouachita
Population Group: Medicaid Elig—Monroe City (E. Pt)
Plaquemines
Service Area: Plaquemines East
Service Area: Plaquemines West
*Pointe Coupee
Rapides
Population Group: Med Eligible—Rapides Par
*Sabine
St Bernard
St Charles
St Landry
Population Group: Low Inc—St. Landry Parish
St Martin
*St Mary
Population Group: Low Inc—St. Mary Par
*Tangipahoa
Service Area: Northern Tangipahoa
Facility: Lallie Kemp Hosp. Outpatient Unit
*Tensas
Terrebonne
Facility: Leonard J. Chabert Medical Center
*Union
*Vermilion
*Vernon
*West Feliciana
Population Group: Low Inc—W Feliciana Parish
*Winn

PRIMARY MEDICAL CARE: Louisiana
Service Area Listing

Service Area Name

Ascension/Northeast Iberville
Parts:
District 7–a
District 6–b
District 6–a
District 5
District 4–b
District 4–a
District 3
District 7–b
Parish—Iberville
Parts:
District 4
District 3
Dequincy
Parish—Calcasieu
Parts:
C.T. 24
Donaldsonville
Parts:
C.T. 308–310
Livingston Service Area
Parish—Livingston
Parts:
District 6
District 1
District 9
District 8
District 7
Lower 9Th Ward
Parish—Orleans
Parts:
C.T. 7.01–7.02
C.T. 8
C.T. 9.01–9.04
North Lake Charles
Parish—Calcasieu
Parts:
C.T. 2–4
C.T. 14–15
Northern Tangipahoa
Parish—Tangipahoa
Parts:
C.T. 9532–9536
NW Natchitoches Co
Parish—Natchitoches
Parts:
C.T. 9904
C.T. 9907
Plaquemines East
Parish—Plaquemines
Parts:
District 1
Plaquemines West
Parish—Plaquemines
Parts:
District 6
District 5
District 9
District 8
District 7
Vinton
Parish—Calcasieu
Parts:
C.T. 35–36

PRIMARY MEDICAL CARE: Louisiana
Population Group Listing

Population Group

Low Inc—Acadia Co 2
Parish—Acadia
Parts:
Low Income
Low Inc—Claiborne
Parish—Claiborne
Parts:
Low Income
Low Inc—Eden Park
Parish—East Baton Rouge
Parts:
C.T. 8–10
C.T. 12–17
C.T. 21–25
C.T. 28
C.T. 40.07–40.08
Low Inc—Gentilly Woods
Parish—Orleans
Parts:
C.T. 17.02
Low Inc—Gert Town
Parish—Orleans
Parts:
C.T. 70
C.T. 72
C.T. 72
C.T. 75
C.T. 75.02
C.T. 76.05
C.T. 129–132
Low Inc—Iberia Parish
Parish—Iberia
Parts:
Low Income
Low Inc—Irish Channel/Central City
Parish—Orleans
Parts:
C.T. 68
C.T. 77–80
C.T. 81.01–81.02
C.T. 82–89
C.T. 91–92
C.T. 93.01–93.02
C.T. 94
Low Inc—Midtown
Parish—Orleans
Parts:
C.T. 11
C.T. 13.01–13.04
C.T. 14.01–14.02
C.T. 15–16
C.T. 17.03
C.T. 17.06
C.T. 17.98
C.T. 19–23
C.T. 27–31
C.T. 33.06–33.07
C.T. 34–36
C.T. 39–40
C.T. 44.01–44.02
Low Inc—St. Landry Parish
Parish—St Landry
Parts:
Low Income
Low Inc—St. Mary Par
Parish—St Mary
Parts:
Low Income
Low Inc—SW Jefferson Davis Parish
Parish—Jefferson Davis
Parts:
C.T. 9806
C,T. 9807
Low Inc—W Feliciana Parish
Parish—West Feliciana
Parts:
Low Income
Med Eligible—Rapides Par
Parish—Rapides
Parts:
Medicaid Eligible
Medicaid Elig—Monroe City (E. Pt)
Parish—Ouachita
Parts:
C.T. 3
C.T. 6–15
C.T. 106.01
C.T. 106.03
Medicaid Eligible—Algiers/Fisher
Parish—Orleans
Parts:
C.T. 1–4
C.T. 6.01–6.05

PRIMARY MEDICAL CARE: Louisiana
Facility Listing

Facility Name

FCI Oakdale 1
Parish—Allen
Health Care For Homeless Clinic
Parish—Orleans
Lallie Kemp Hosp. Outpatient Unit
Parish—Tangipahoa
Leonard J. Chabert Medical Center
Parish—Terrebonne
Moss Reg Med Ctr Outpt Clinic
Parish—Calcasieu

PRIMARY MEDICAL CARE: Maine
County Listing

County Name

Androscoggin
Service Area: Jay/Livermore Falls
*Aroostook
Service Area: Ashland PCAA
Service Area: Danforth
Service Area: St. Francis
Service Area: Van Buren
Population Group: Amer Ind—Micmacs
Population Group: Low Inc—Houlton PCAA
Population Group: Low Inc—Island Falls
Population Group: Low Inc—Mars Hill PCAA
Population Group: Low Inc—Ft. Kent
Population Group: Low Inc—Lincoln
Cumberland
Service Area: Casco Bay Islands
Service Area: Sacopee Valley Region
Population Group: Homeless—Portland
*Franklin
Service Area: Jay/Livermore Falls
Service Area: Rangeley
Population Group: Low Inc—Rumford
*Kennebec
Service Area: Jay/Livermore Falls
Population Group: Low Inc—Richmond PCAA
*Knox
Population Group: Low Inc—Penobscot Bay Islands
Facility: ME State Prison/Me Corr Inst—Thomaston
*Lincoln

PRIMARY MEDICAL CARE: Maine
County Listing

County Name

Population Group: Low Inc—Richmond PCAA
Population Group: Low Inc—Damariscotta
*Oxford
Service Area: Bethel
Service Area: Jay/Livermore Falls
Service Area: Rangeley
Service Area: Sacopee Valley Region
Population Group: Low Inc—Rumford
Penobscot
Service Area: Corinth
Service Area: Danforth
Service Area: Howland
Population Group: Low Inc—Millinocket PCAA 44
Population Group: Low Inc—Island Falls
Population Group: Low Inc—Dexter
Population Group: Low Inc—Lincoln
Population Group: Penobscot Nat Amer Tribe
*Piscataquis
Service Area: Bingham
Population Group: Low Inc—Millinocket PCAA 44
Population Group: Low Inc—Greenville PCAA
Population Group: Low Inc—Milo PCAA
Population Group: Low Inc—Skowhegan #26
*Sagadahoc
Population Group: Low Inc—Richmond PCAA
*Somerset
Service Area: Bingham
Service Area: Jackman
Population Group: Low Inc—Greenville PCAA
Population Group: Low Inc—Dexter
Population Group: Low Inc—Skowhegan #26
Waldo
Population Group: Low Inc—Belfast
*Washington
Service Area: Danforth
Service Area: Eastport
Service Area: Jonesport
Service Area: Topsfield
Population Group: Low Inc—Lubec
Population Group: Low Inc—Machias
Population Group: Low Inc—Calais PCAA
Population Group: Low Inc—Milbridge
York
Service Area: Sacopee Valley Region

PRIMARY MEDICAL CARE: Maine
Service Area Listing

Service Area Name

Ashland PCAA
County—Aroostook
Parts:
Ashland Town
Garfield Plantation
Masardis Town
Nashville Plantation
Oxbow Plantation
Portage Lake Town
Bethel
County—Oxford
Parts:
Bethel Town
Gilead Town

PRIMARY MEDICAL CARE: Maine
Service Area Listing

Service Area Name

Greenwood Town
Newry Town
North Oxford Unorg.
Upton Town
Woodstock Town
Bingham
County—Piscataquis
Parts:
Kingsbury Plantation
County—Somerset
Parts:
Bingham Town
Brighton Plantation
Caratunk Town
Moscow Town
Northeast Somerset Unorg.
Pleasant Ridge Plantation
Solon Town
The Forks Plantation
West Forks Plantation
Casco Bay Islands
County—Cumberland
Parts:
Cliff Is.
Cushing Is.
Great Chebeague Is.
Great Diamond Is.
Little Chebeague Is.
Little Diamond Is.
Long Is.
Peak's Is.
Corinth
County—Penobscot
Parts:
Bradford Town
Charleston Town
Corinth Town
Exeter Town
Hudson Town
Danforth
County—Aroostook
Parts:
Bancroft Town
Orient Town
Weston Town
County—Penobscot
Parts:
Drew Plantation
Kingman Unorg.
Prentiss Plantation
County—Washington
Parts:
Danforth Town
Eastport
County—Washington
Parts:
Eastport City
Passamaquoddy Pleasant Point Res
Pembroke Town
Perry Town
Howland
County—Penobscot
Parts:
Burlington Town
East Central Penobscot Unorg.
Edinburg Town
Enfield Town
Howland Town
Lagrange Town
Lowell Town
Maxfield Town
Passadumkeag Town

PRIMARY MEDICAL CARE: Maine
Service Area Listing

Service Area Name

Seboeis Plantation
Jackman
County—Somerset
Parts:
Dennistown Plantation
Jackman Town
Moose River Town
Jay/Livermore Falls
County—Androscoggin
Parts:
Livermore Falls Town
Livermore Town
County—Franklin
Parts:
Jay Town
County—Kennebec
Parts:
Fayette Town
County—Oxford
Parts:
Canton Town
Hartford Town
Sumner Town
Jonesport
County—Washington
Parts:
Addison Town
Beals Town
Centerville Town
Columbia Falls Town
Jonesboro Town
Jonesport Town
Rangeley
County—Franklin
Parts:
Coplin Plantation
Dallas Plantation
Eustis Town
Madrid Town
North Franklin Unorg.
Rangeley Plantation
Rangeley Town
Sandy River Plantation
County—Oxford
Parts:
Lincoln Plantation
Magalloway Plantation
North Oxford Unorg.
Sacopee Valley Region
County—Cumberland
Parts:
Baldwin Town
County—Oxford
Parts:
Hiram Town
Porter Town
County—York
Parts:
Cornish Town
Limerick Town
Parsonsfield Town
St. Francis
County—Aroostook
Parts:
Allagash Town
St. Francis Town
St. John Plantation
Topsfield
County—Washington
Parts:
Codyville Plantation
Grand Lake Stream Plantation

PRIMARY MEDICAL CARE: Maine
Service Area Listing

Service Area Name

North Washington Unorg.
Passamaquoddy Indian Township Re
Talmadge Town
Topsfield Town
Vanceboro Town
Waite Town
Van Buren
County—Aroostook
Parts:
Grand Isle Town
Hamlin Town
Van Buren Town

PRIMARY MEDICAL CARE: Maine
Population Group Listing

Population Group

Amer Ind—Micmacs
County—Aroostook
Parts:
Castle Hill Town
Chapman Town
Easton Town
Mapleton Town
Presque Isle City
Wade Town
Homeless—Portland
County—Cumberland
Parts:
C.T. 1–13
Low Inc—Belfast
County—Waldo
Parts:
Belfast City
Belmont Town
Brooks Town
Jackson Town
Knox Town
Liberty Town
Monroe Town
Montville Town
Morrill Town
Northport Town
Searsmont Town
Searsport Town
Stockton Springs Town
Swanville Town
Waldo Town
Low Inc—Calais PCAA
County—Washington
Parts:
Alexander Town
Baileyville Town
Baring Town
Calais City
Charlotte Town
Cooper Town
Crawford Town
Meddybemps Town
Plantation #21
Princeton Town
Robbinston Town
Low Inc—Damariscotta
County—Lincoln
Parts:
Alna Town
Boothbay Harbor Town
Boothbay Town
Bremen Town
Bristol Town
Damariscotta Town
Edgecombe Town

PRIMARY MEDICAL CARE: Maine
Population Group Listing

Population Group

Jefferson Town
Monhegan Plantation
Newcastle Town
Nobleboro Town
South Bristol Town
Southport Town
Waldoboro Town
Low Inc—Dexter
County—Penobscot
Parts:
Corinna Town
Dexter Town
Garland Town
County—Somerset
Parts:
Cambridge Town
Ripley Town
Low Inc—Ft. Kent
County—Aroostook
Parts:
Eagle Lake Town
Fort Kent Town
Frenchville Town
Madawaska Town
New Canada Town
St. Agatha Town
Wallagras Plt.
Winterville Plt.
Low Inc—Greenville PCAA
County—Piscataquis
Parts:
Beaver Cove Town
Blanchard Plantation
Greenvilletown
Monsontown
NE Piscataquis (Sw 1/3)
NW Piscataquis
Shirleytown
Willimantic Town
County—Somerset
Parts:
NE Somerset (North 2/3)
Seboomook Lake Town
Low Inc—Houlton PCAA
County—Aroostook
Parts:
Amity Town
Cary Plantation
Cental Aroostook Unorg.
Glenwood Plantation
Hammond Plantation
Haynesville Town
Hodgdon Town
Houlton Town
Linneus Town
Littleton Town
Ludlow Town
Merrill Town
Monticello Town
New Limerick Town
Oakfield Town
Reed Plantation
Smyrna Town
Low Inc—Island Falls
County—Aroostook
Parts:
Crystal Town
Dyer Brook Town
Hersey Town
Island Falls
Moro Plantation
S. Aroostook Un. (N 2/3)

PRIMARY MEDICAL CARE: Maine
Population Group Listing

Population Group

Sherman Town
County—Penobscot
Parts:
Mt. Chase Town
N. Penobscot Un. (N 1/3)
Pattentown
Stacyville Town
Low Inc—Lincoln
County—Aroostook
Parts:
Macwahoc Plt
South Aroostook Unorg
County—Penobscot
Parts:
Carroll Plt
Chester Town
Lakeville Towm
Lee Town
Lincoln Town
Mattawamkeag Town
Springfield Town
Twombley Unorg
Webster Plt
Winn Town
Woodville Town
Low Inc—Lubec
County—Washington
Parts:
Dennysville Town
East Central Wash. Unorg.
Lubec Town
Whiting Town
Low Inc—Machias
County—Washington
Parts:
Cutler Town
East Machias Town
Machias Town
Machiasport Town
Marshfield Town
Northfield Town
Roque Bluffs Town
Wesley Town
Whitneyville Town
Low Inc—Mars Hill PCAA
County—Aroostook
Parts:
Blaine Town
Bridgewater Town
E. Plantation
Mars Hill Town
Westfield Town
Low Inc—Milbridge
County—Washington
Parts:
Beddington Town
Cherryfield Town
Columbia Town
Deblois Town
Harrington Town
Milbridge Town
Steuben Town
Low Inc—Millinocket PCAA 44
County—Penobscot
Parts:
East Millinocket Town
Medway Town
Millinocket Town
N Penobscot (S 2/3)
County—Piscataquis
Parts:
NE Piscataquis (N 1/3)

PRIMARY MEDICAL CARE: Maine
Population Group Listing

Population Group

Low Inc—Milo PCAA
County—Piscataquis
Parts:
Atkinson Town
Brownville Town
Lake View Plantation
Medford Town
Milo Town
NE Piscataquis (Se 1/3)
Sebec Town
SE Piscataquis Unorg
Low Inc—Penobscot Bay Islands
County—Knox
Parts:
Matinicus Isle Plt
North Haven Town
Vinalhaven Town
Low Inc—Richmond PCAA
County—Kennebec
Parts:
Litchfield
County—Lincoln
Parts:
Dresden
County—Sagadahoc
Parts:
Bowdoinham
Richmond
Low Inc—Rumford
County—Franklin
Parts:
Carthage Town
Weld Town
County—Oxford
Parts:
Andover Town
Byron Town
Dixfield Town
Hanover Town
Mexico Town
Milton Town
Peru Town
Roxbury Town
Rumford Town
Low Inc—Skowhegan #26
County—Piscataquis
Parts:
Wellington Town
County—Somerset
Parts:
Anson Town
Athens Town
Canaan Town
Central Somerset Unorg
Cornville Town
Embden Town
Harmony Town
Highland Town
Madison Town
Mercer Town
New Portland Town
Norridgewock Town
Skowhegan Town
Smithfield Town
Starks Town
Penobscot Nat Amer Tribe
County—Penobscot
Parts:
Old Town City

PRIMARY MEDICAL CARE: Maine
Facility Listing

Facility Name

ME State Prison/Me Corr Inst—Thomaston
County—Knox

PRIMARY MEDICAL CARE: Maryland
County Listing

County Name

Allegany
Service Area: George's Creek
Service Area: Hancock (MD/PA)
Facility: FCI Cumberland
Baltimore
Baltimore City (Indep)
Service Area: Middle River
Population Group: Low Inc—West Baltimore City
Population Group: Low Inc—East Baltimore City
Population Group: Low Inc—North Central Baltimore
Population Group: Low Inc—W. Central Baltimore
Population Group: Low Inc—Belair Road/Brehm's Lane
Population Group: Low Inc—South Baltimore City
Population Group: Low Inc—Park West
Facility: Healthcare For The Homeless
Calvert
*Caroline
Cecil
*Dorchester
*Garrett
Population Group: Low Inc—Garrett
*Kent
Population Group: Low Inc—Kent
Montgomery
Population Group: Low Inc—S Central Montgomery Co
Population Group: Low Inc—Langley Park
Facility: Projecto Salud Facility
Prince Georges
Population Group: Low Inc—Langley Park
Queen Annes
*Somerset
Population Group: Low Inc—Somerset
Facility: Eastern Corr Inst
Washington
Service Area: Hancock (MD/PA)
Population Group: Low Inc—Hagerstown
*Wicomico
Population Group: Low Inc—Wicomico
*Worcester
Population Group: Low Inc—Worcester County

PRIMARY MEDICAL CARE: Maryland
Service Area Listing

Service Area Name

George's Creek
County—Allegany
Parts:
C.T. 13.01
C.T. 14.01
C.T. 15.01–15.03
C.T. 16.01
C.T. 17.01
C.T. 18
C.T. 19.01
C.T. 20.01
C.T. 21–22

PRIMARY MEDICAL CARE: Maryland
Service Area Listing

Service Area Name

Hancock (MD/PA)
County—Allegany
Parts:
District 1, Orleans
County—Washington
Parts:
District 4, Clear Spring
District 5, Hancock
District 15, Indian Spring
Middle River
County—Baltimore
Parts:
C.T. 4507
C.T. 4508.01–4508.02
C.T. 4513–4516

PRIMARY MEDICAL CARE: Maryland
Population Group Listing

Population Group

Low Inc—Belair Road/Brehm's Lane 1
County—Baltimore City (Indep)
Parts:
C.T. 801.01–801.02
C.T. 2601.02
C.T. 2602.01–2602.03
C.T. 2603.01–2603.03
C.T. 2604.02
C.T. 2604.98
C.T. 2701.01
Low Inc—East Baltimore City
County—Baltimore City (Indep)
Parts:
C.T. 301.00
C.T. 302.00
C.T. 501.00
C.T. 602.00
C.T. 603.00
C.T. 1001.00
C.T. 1002.00
C.T. 1003.00
C.T. 1004.00
C.T. 1205.00
C.T. 604.00
C.T. 605.00
C.T. 701.00
C.T. 702.00
C.T. 703.00
C.T. 704.00
C.T. 802.00
C.T. 803.01
C.T. 803.02
C.T. 804.00
C.T. 806.00
C.T. 807.00
C.T. 808.00
C.T. 909.00
Low Inc—Garrett
County—Garrett
Parts:
Low Income
Low Inc—Hagerstown
County—Washington
Parts:
C.T. 3.02
C.T. 4–5
C.T. 6.01–6.02
C.T. 7–9
Low Inc—Kent
County—Kent
Parts:
Low Income

PRIMARY MEDICAL CARE: Maryland
Population Group Listing

Population Group

Low Inc—Langley Park
County—Montgomery
Parts:
C.T. 7019–7020
County—Prince Georges
Parts:
C.T. 8056–8057
Low Inc—North Central Baltimore
County—Baltimore City (Indep)
Parts:
C.T. 805
C.T. 904–908
C.T. 1203–1204
C.T. 1206
Low Inc—Park West
County—Baltimore City (Indep)
Parts:
C.T. 1512–1513
C.T. 2716–2717
C.T. 2718.01–2718.02
C.T. 2801.01
Low Inc—S Central Montgomery Co
County—Montgomery
Parts:
C.T. 7034.04
Low Inc—Somerset
County—Somerset
Parts:
Low Income
Low Inc—South Baltimore City
County—Baltimore City (Indep)
Parts:
C.T. 2101.01
C.T. 2102.01
C.T. 2301–2303
C.T. 2401
C.T. 2404
C.T. 2502.03–2502.05
C.T. 2502.07
C.T. 2503.01–2503.03
C.T. 2504.01–2504.02
C.T. 2505–2506
Low Inc—W. Central Baltimore
County—Baltimore City (Indep)
Parts:
C.T. 1102
C.T. 1207
C.T. 1301–1305
C.T. 1401–1403
C.T. 1501–1506
C.T. 1507.01–1507.02
C.T. 1508.01–1508.02
C.T. 1509–1511
C.T. 1601–1607
C.T. 1608.01–1608.02
C.T. 1701–1703
C.T. 2801.02
C.T. 2802
C.T. 2803.01–2803.02
Low Inc—West Baltimore City
County—Baltimore City (Indep)
Parts:
C.T. 1801–1803
C.T. 1901–1903
C.T. 2001–2005
Low Inc—Wicomico
County—Wicomico
Parts:
Low Income
Low Inc—Worcester County
County—Worcester

PRIMARY MEDICAL CARE: Maryland
Population Group Listing

Population Group

Parts:
Low Income

PRIMARY MEDICAL CARE: Maryland
Facility Listing

Facility Name

Eastern Corr Inst
County—Somerset
FCI Cumberland
County—Allegany
Healthcare For The Homeless
County—Baltimore City (Indep)
Projecto Salud Facility
County—Montgomery

PRIMARY MEDICAL CARE: Massachusetts
County Listing

County Name

Barnstable
Population Group: Homeless—Hyannis
Bristol
Population Group: Low Inc—C Fall River
Population Group: Low Inc—C New Bedford
Essex
Service Area: North Lawrence
Service Area: South Lynn
Population Group: Med Elig—Salem/East Peabody
Hampden
Service Area: Gateway Regional Dist
Population Group: Low Inc—Springfield
Population Group: Low Inc Of Holyoke
Hampshire
Service Area: Gateway Regional Dist
Service Area: Hampshire Regional Dist
Middlesex
Service Area: Community Health Network Area #16
Facility: MCI—Concord
Suffolk
Service Area: Community Health Network Area #16
Service Area: Roxbury
Service Area: SW Dorchester
Population Group: Hmlss—Boston
Worcester
Population Group: Low Inc—Worcester

PRIMARY MEDICAL CARE: Massachusetts
Service Area Listing

Service Area Name

Community Health Network Area #16
County—Middlesex
Parts:
Everett City
County—Suffolk
Parts:
Chelsea City
Revere City
Winthrop Town
Gateway Regional Dist
County—Hampden
Parts:
Blandford Town
Chester Town
Montgomery Town
Russell Town
County—Hampshire

PRIMARY MEDICAL CARE: Massachusetts
Service Area Listing

Service Area Name

Parts:
Huntington Town
Middlefield Town
Worthington Town
Hampshire Regional Dist
County—Hampshire
Parts:
Chesterfield Town
Cummington Town
Goshen Town
Plainfield Town
North Lawrence
County—Essex
Parts:
C.T. 2501–2517
Roxbury
County—Suffolk
Parts:
C.T. 801–809
C.T. 811–821
South Lynn
County—Essex
Parts:
C.T. 2055–2065
C.T. 2068–2072
SW Dorchester
County—Suffolk
Parts:
C.T. 923–924
C.T. 1001–1005
C.T. 1010.01–1010.02
C.T. 1011.01–1011.02
C.T. 1101.01

PRIMARY MEDICAL CARE: Massachusetts
Population Group Listing

Population Group

Hmlss—Boston
County—Suffolk
Parts:
Long Is Shelter/Ct 1501
Pc Clinic/Bc Hosp/Ct 710
Pine Street Inn/C.T. 712
Shattuck Ctr/Ct 1101.02
St. Francis Hse/Ct 1206
Homeless—Hyannis
County—Barnstable
Parts:
C.T. 124
C.T. 126
Low Inc—C Fall River
County—Bristol
Parts:
C.T. 6408–6414
C.T. 6419–6420
Low Inc—C New Bedford
County—Bristol
Parts:
C.T. 6504–6509
C.T. 6510.02
C.T. 6511–6518
C.T. 6518.99–6519.00
C.T. 6520–6527
Low Inc—Springfield
County—Hampden
Parts:
C.T. 8001
C.T. 8002.01–8002.02
C.T. 8003–8010
C.T. 8011.01–8011.02
C.T. 8012–8013

PRIMARY MEDICAL CARE: Massachusetts
Population Group Listing

Population Group

C.T. 8014.01–8014.02
C.T. 8015.01–8015.03
C.T. 8016.01–8016.05
C.T. 8017–8025
C.T. 8026.01–8026.02
Low Inc—Worcester
County—Worcester
Parts:
C.T. 7301–7303
C.T. 7304.01–7304.02
C.T. 7305–7307
C.T. 7308.01–7308.02
C.T. 7309.01–7309.02
C.T. 7310
C.T. 7311.01–7311.02
C.T. 7312.01–7312.02
C.T. 7313–7319
C.T. 7320.01–7320.02
C.T. 7321
C.T. 7322.01–7322.03
C.T. 7323–7328
C.T. 7329.01–7329.02
C.T. 7330
C.T. 7331.01–7331.02
Low Inc Of Holyoke
County—Hampden
Parts:
C.T. 8114–8118
C.T. 8120
Med Elig—Salem/East Peabody
County—Essex
Parts:
C.T. 2042–2043
C.T. 2045–2046
C.T. 2107–2108

PRIMARY MEDICAL CARE: Massachusetts
Facility Listing

Facility Name

MCI—Concord 3
County—Middlesex

PRIMARY MEDICAL CARE: Michigan
County Listing

County Name

*Alcona
*Alger
Population Group: Low Inc—Alger Co
Facility: Alger Max Fac
Allegan
Service Area: Allegan
*Alpena
Population Group: Low Inc—Alpena Co
*Antrim
Service Area: Mancelona
Population Group: Low Inc—East Jordan
*Arenac
Service Area: Sterling/Standish
Bay
Service Area: Sterling/Standish
*Benzie
Population Group: Low Inc—Benzie Co
Berrien
Population Group: Low Inc—Berrien Co
*Branch
Population Group: Low Inc—Branch Co
Calhoun
Population Group: Low Inc—Calhoun Co
*Cass
Service Area: Dowagiac

PRIMARY MEDICAL CARE: Michigan
County Listing

County Name

*Charlevoix
Service Area: Beaver Island
Population Group: Low Inc—East Jordan
*Cheboygan
Population Group: Low Inc—Cheboygan Co
*Chippewa
Population Group: Low Inc—Chippewa Co
Facility: Chippewa Cty Corr Inst
*Clare
*Crawford
Population Group: Low Inc—Crawford Co
*Delta
Population Group: Low Inc—Delta Co
*Dickinson
Population Group: Low Inc—Dickinson Co
*Emmet
Population Group: Little Traverse Bay Band Of Odawa Indian
Genesee
Service Area: Otter Lake
Population Group: Low Inc—Flint
*Gladwin
Population Group: Low Inc—Gladwin Co
*Gogebic
Population Group: Low Inc—Ewen
Population Group: Low Inc—Ironwood/Hurley (MI/WI)
*Grand Traverse
Population Group: Low Inc—Cadillac/Buckley
*Gratiot
Population Group: Low Inc—Gratiot Co
*Hillsdale
Population Group: Low Inc—Hillsdale Co
*Houghton
Population Group: Low Inc—Houghton Co
*Huron
Service Area: Pigeon
Service Area: Port Austin
Population Group: Low Inc—Harbor Beach/Bad Axe
*Ionia
Population Group: Low Inc/MFW—Ionia Co
*Iosco
Population Group: Low Inc—Iosco Co
*Iron
Population Group: Low Inc—Iron Co
*Isabella
Population Group: Low Inc—Isabella Co
Kalamazoo
Population Group: Huron Potawatomi, Inc.
Population Group: Low Inc—N Kalamazoo City
*Kalkaska
Kent
Population Group: Low Inc—Grand Rapids
*Keweenaw
*Lake
Lapeer
Service Area: Otter Lake
*Leelanau
Service Area: Northport/Suttons Bay
*Luce
Population Group: Low Inc—Luce Co
*Mackinac
Population Group: Low Inc—Mackinac Co
Macomb
Facility: Macomb Corr Fac
*Manistee
Population Group: Little River Band Of Ottawa Indians, Inc

PRIMARY MEDICAL CARE: Michigan
County Listing

County Name

Population Group: Low Inc—Manistee Co
*Marquette
Service Area: Gwinn
Service Area: Western Marquette
Facility: Marquette Branch Prs
*Mason
Population Group: Low Inc—Mason Co
*Mecosta
*Menominee
Population Group: Low Inc—E Marinette/S Menominee (MI/WI
Population Group: Low Inc—Northern Menominee
*Missaukee
*Montcalm
Population Group: Low Inc—Montcalm Co
*Montmorency
Muskegon
Population Group: Low Inc—Muskegon City
Population Group: Low Inc—Northern Muskegon Co
*Newaygo
Population Group: Low Inc—Newaygo Co
*Oceana
Population Group: Low Inc—Oceana Co
*Ogemaw
Population Group: Low Inc—Ogemaw Co
*Ontonagon
Population Group: Low Inc—Ewen
*Osceola
*Oscoda
*Otsego
Population Group: Low Inc—Otsego Co
*Presque Isle
*Roscommon
Population Group: Low Inc—Roscommon Co
Saginaw
Population Group: Low Inc—Eastside Saginaw
Facility: Saginaw Corr Fac
Facility: Saginaw Cooperative Hosp Inc
*Sanilac
Population Group: Low Inc—Sanilac Co
*Schoolcraft
Population Group: Low Inc—Schoolcraft Co
St Clair
Population Group: Low Inc—St Clair Co
*St Joseph
Population Group: Low Inc—St. Joseph Co
*Tuscola
Service Area: Otter Lake
Service Area: Pigeon
Population Group: Low Inc—Caro/Cass City
Van Buren
Service Area: Dowagiac
Wayne
Service Area: Airport/Conner (N.E. Detroit)
Service Area: Chene (S. Central Detroit)
Service Area: Highland Park
Service Area: Mackenzie/Brooks
Service Area: Nolan/State Fair/Davison/Pershing
Service Area: Southwest Detroit
Service Area: Tireman/Chadsey
Population Group: Low Inc—Eastside Detroit
Population Group: Low Inc—Hamtramck
*Wexford

PRIMARY MEDICAL CARE: Michigan
County Listing

County Name

Population Group: Low Inc—Cadillac/Buckley

PRIMARY MEDICAL CARE: Michigan
Service Area Listing

Service Area Name

Airport/Conner (N.E. Detroit)
County—Wayne
Parts:
C.T. 5033–5037
C.T. 5039–5050
C.T. 5052–5053
C.T. 5107–5109
Allegan
County—Allegan
Parts:
Allegan City
Allegan Township
Cheshire Township
Clyde Township
Dorr Township
Hopkins Township
Lee Township
Leighton Township
Martin Township
Monterey Township
Salem Township
Trowbridge Township
Valley Township
Watson Township
Wayland City
Wayland Township
Beaver Island
County—Charlevoix
Parts:
Peaine Township
St. James Township
Chene (S. Central Detroit)
County—Wayne
Parts:
C.T. 5111
C.T. 5161–5162
C.T. 5173–5180
C.T. 5183–5188
C.T. 5203–5207
C.T. 5218–5219
Dowagiac
County—Cass
Parts:
Dowagiac City
La Grange Township
Marcellus Township
Penn Township
Pokagon Township
Silver Creek Township
Volinia Township
Wayne Township
County—Van Buren
Parts:
Decatur Township
Hamilton Township
Hartford Township
Hartford City
Keeler Township
Porter Township
Gwinn
County—Marquette
Parts:
Ewing Township
Forsyth Township
Turin Township

PRIMARY MEDICAL CARE: Michigan
Service Area Listing

Service Area Name

Wells Township
Highland Park
County—Wayne
Parts:
C.T. 5530–5537
Mackenzie/Brooks
County—Wayne
Parts:
C.T. 5304–5305
C.T. 5308
C.T. 5341–5344
C.T. 5347
C.T. 5350–5355
C.T. 5361
C.T. 5363–5368
C.T. 5370–5373
C.T. 5378
C.T. 5451–5454
C.T. 5460–5461
C.T. 5466-5467
Mancelona
County—Antrim
Parts:
Chestonia Township
Custer Township
Helena Township
Kearney Township
Mancelona Township
Star Township
Nolan/State Fair/Davison/Pershing
County—Wayne
Parts:
C.T. 5061–5080
C.T. 5102–5106
Northport/Suttons Bay
County—Leelanau
Parts:
Leelanau Township
Leland Township
Suttons Bay Township
Otter Lake
County—Genesee
Parts:
Forest Township
County—Lapeer
Parts:
Deerfield Township
Marathon Township
North Branch Township
Rich Township
County—Tuscola
Parts:
Arbela Township
Millington Township
Watertown Township
Pigeon
County—Huron
Parts:
Brookfield Township
Caseville Township
Fairhaven Township
McKinley Township
Sebewaing Township
Winsor Township
County—Tuscola
Parts:
Columbia Township
Port Austin
County—Huron
Parts:
Dwight Township
Gore Township

PRIMARY MEDICAL CARE: Michigan
Service Area Listing

Service Area Name

Hume Township
Huron Township
Lake Township
Pointe Aux Barques Township
Port Austin Township
Southwest Detroit
County—Wayne
Parts:
C.T. 5208–5209
C.T. 5211–5214
C.T. 5231–5238
C.T. 5240–5243
C.T. 5245
C.T. 5247–5248
Sterling/Standish
County—Arenac
County—Bay
Parts:
Gibson Township
Mount Forest Township
Pinconning City
Pinconning Township
Tireman/Chadsey
County—Wayne
Parts:
C.T. 5221–5222
C.T. 5251–5258
C.T. 5260–5265
C.T. 5335–5337
C.T. 5345–5346
Western Marquette
County—Marquette
Parts:
Champion Township
Humboldt Township
Michigamme Township
Republic Township

PRIMARY MEDICAL CARE: Michigan
Population Group Listing

Population Group

Huron Potawatomi, Inc.
County—Kalamazoo
Parts:
Wakeshma Twp
Little River Band Of Ottawa Indians, Inc
County—Manistee
Parts:
American Indians
Little Traverse Bay Band Of Odawa Indian
County—Emmet
Parts:
American Indians
Low Inc—Alger Co
County—Alger
Parts:
Low Income
Low Inc—Alpena Co
County—Alpena
Parts:
Low Income
Low Inc—Benzie Co
County—Benzie
Parts:
Low Income
Low Inc—Berrien Co
County—Berrien
Parts:
Low Income
Low Inc—Branch Co
County—Branch

PRIMARY MEDICAL CARE: Michigan
Population Group Listing

Population Group

Parts:
Low Income
Low Inc—Cadillac/Buckley
County—Grand Traverse
Parts:
Fife Lake Twp
Grant Twp
Mayfield Twp
Paradise Twp
County—Wexford
Parts:
Low Income
Low Inc—Calhoun Co
County—Calhoun
Parts:
Low Income
Low Inc—Caro/Cass City
County—Tuscola
Parts:
Almer Twp
Elkland Twp
Ellington Twp
Elmwood Twp
Indianfields Twp
Novesta Twp
Wells Twp
Low Inc—Cheboygan Co
County—Cheboygan
Parts:
Low Income
Low Inc—Chippewa Co
County—Chippewa
Parts:
Low Income
Low Inc—Crawford Co
County—Crawford
Parts:
Low Income
Low Inc—Delta Co
County—Delta
Parts:
Low Income
Low Inc—Dickinson Co
County—Dickinson
Parts:
Low Income
Low Inc—E Marinette/S Menominee (MI/WI
County—Menominee
Parts:
Ingallston Twp
Mellen Twp
Menominee City
Menominee Twp
Low Inc—East Jordan
County—Antrim
Parts:
Banks Twp
Central Lake Twp
Echo Twp
Forest Home Twp
Jordan Twp
Torch Lake Twp
Warner Twp
County—Charlevoix
Parts:
Boyne Valley Twp
Boyne City City
Chandler Twp
East Jordan City
Evangeline Twp
Eveline Twp
Hudson Twp

PRIMARY MEDICAL CARE: Michigan
Population Group Listing

Population Group

Marion Twp
Melrose Twp
Norwood Twp
South Arm Twp
Wilson Twp
Low Inc—Eastside Detroit
County—Wayne
Parts:
C.T. 5121–5124
C.T. 5126
C.T. 5129
C.T. 5132–5136
C.T. 5139–5143
C.T. 5145–5157
Low Inc—Eastside Saginaw
County—Saginaw
Parts:
C.T. 1–11
C.T. 110
Low Inc—Ewen
County—Gogebic
Parts:
Marenisco Twp
Watersmeet Twp
County—Ontonagon
Parts:
Bergland Twp
Haight Twp
Interior Twp
Matchwood Twp
McMillan Twp
Rockland Twp
Stannard Twp
Low Inc—Flint
County—Genesee
Parts:
C.T. 1–11
C.T. 14–15
C.T. 17–29
C.T. 32
C.T. 34
C.T. 37–38
C.T. 103.02
C.T. 103.04
Low Inc—Gladwin Co
County—Gladwin
Parts:
Low Income
Low Inc—Grand Rapids
County—Kent
Parts:
C.T. 4
C.T. 8–10
C.T. 11.01–11.02
C.T. 12–15
C.T. 19–31
C.T. 36–40
Low Inc—Gratiot Co
County—Gratiot
Parts:
Low Income
Low Inc—Hamtramck
County—Wayne
Parts:
C.T. 5520–5526
Low Inc—Harbor Beach/Bad Axe
County—Huron
Parts:
Bad Axe City
Bingham Twp
Bloomfield Twp
Chandler Twp

PRIMARY MEDICAL CARE: Michigan
Population Group Listing

Population Group

Colfax Twp
Grant Twp
Harbor Beach City
Lincoln Twp
Meade Twp
Oliver Twp
Paris Twp
Rubicon Twp
Sand Beach Twp
Sheridan Twp
Sherman Twp
Sigel Twp
Verona Twp
Low Inc—Hillsdale Co
County—Hillsdale
Parts:
Low Income
Low Inc—Houghton Co
County—Houghton
Parts:
Low Income
Low Inc—Iosco Co
County—Iosco
Parts:
Low Income
Low Inc—Iron Co
County—Iron
Parts:
Low Income
Low Inc—Ironwood/Hurley (MI/WI)
County—Gogebic
Parts:
Bessemer City
Bessemer Twp
Erwin Twp
Ironwood City
Ironwood Twp
Wakefield City
Wakefield Twp
Low Inc—Isabella Co
County—Isabella
Parts:
Low Income
Low Inc—Luce Co
County—Luce
Parts:
Low Income
Low Inc—Mackinac Co
County—Mackinac
Parts:
Low Income
Low Inc—Manistee Co
County—Manistee
Parts:
Low Income
Low Inc—Mason Co
County—Mason
Parts:
Low Income
Low Inc—Montcalm Co
County—Montcalm
Parts:
Low Income
Low Inc—Muskegon City
County—Muskegon
Parts:
C.T. 1–5
C.T. 6.01–6.02
C.T. 7
C.T. 7.99–8.00
C.T. 11–13
C.T. 14.01–14.02

PRIMARY MEDICAL CARE: Michigan
Population Group Listing

Population Group

C.T. 19.02
C.T. 21
C.T. 26.01
Low Inc—N Kalamazoo City
County—Kalamazoo
Parts:
C.T. 1
C.T. 2.01–2.02
C.T. 3
C.T. 4.02
C.T. 5–6
C.T. 8.01–8.02
C.T. 9–10
Low Inc—Newaygo Co
County—Newaygo
Parts:
Low Income
Low Inc—Northern Menominee
County—Menominee
Parts:
Cedarville Twp
Daggett Twp
Faithorn Twp
Gourley Twp
Harris Twp
Holmes Twp
Lake Twp
Meyer Twp
Nadeau Twp
Spalding Twp
Stephenson City
Stephenson Twp
Low Inc—Northern Muskegon Co
County—Muskegon
Parts:
Blue Lake Twp
Cedar Creek Twp
Dalton Twp
Fruitland Twp
Holton Twp
Montague Twp
Montague City
White River Twp
Whitehall City
Whitehall Twp
Low Inc—Oceana Co
County—Oceana
Parts:
Low Income
Low Inc—Ogemaw Co
County—Ogemaw
Parts:
Low Income
Low Inc—Otsego Co
County—Otsego
Parts:
Low Income
Low Inc—Roscommon Co
County—Roscommon
Parts:
Low Income
Low Inc—Sanilac Co
County—Sanilac
Parts:
Low Income
Low Inc—Schoolcraft Co
County—Schoolcraft
Parts:
Low Income
Low Inc—St Clair Co
County—St Clair
Parts:

PRIMARY MEDICAL CARE: Michigan
Population Group Listing

Population Group

Low Income
Low Inc—St. Joseph Co
County—St Joseph
Parts:
Low Income
Low Inc/MFW—Ionia Co
County—Ionia
Parts:
Low Income
MFW

PRIMARY MEDICAL CARE: Michigan
Facility Listing

Facility Name

Alger Max Fac
County—Alger
Chippewa C.T.y Corr Inst
County—Chippewa
Macomb Corr Fac
County—Macomb
Marquette Branch Prs
County—Marquette
Saginaw Cooperative Hosp Inc
County—Saginaw
Saginaw Corr Fac
County—Saginaw

PRIMARY MEDICAL CARE: Minnesota
County Listing

County Name

*Beltrami
Service Area: Northome/Blackduck
*Blue Earth
Service Area: Wells
*Carlton
Population Group: Low Inc—Carlton Co
*Cass
Clay
Service Area: Barnesville
Service Area: Hawley
*Clearwater
*Cook
*Cottonwood
Population Group: Low Income—Westbrook
*Faribault
Service Area: Wells
*Freeborn
Service Area: Wells
*Grant
Service Area: Elbow Lake/Dalton
Hennepin
Service Area: Near North—Minneapolis
Population Group: Am In—S. Central Minneapolis (S)
Population Group: Homeless—North Phillips (S)
Population Group: Low Inc—NE Minneapolis
Population Group: Low Inc—N Minneapolis
Population Group: Native Am—South Phillips (S)
*Hubbard
*Itasca
Service Area: Bigfork
*Jackson
Population Group: Low Inc—Jackson Co
*Kanabec
*Kittson
*Koochiching

PRIMARY MEDICAL CARE: Minnesota
County Listing

County Name

Service Area: Northome/Blackduck
Population Group: Low Inc—Inter Falls (#77)
*Lake
Service Area: Silver Bay
*Lake Of The Woods
Population Group: Low Inc—Lake Of The Woods
*Le Sueur
Population Group: Low Inc—Le Sueur Co
*Lincoln
Service Area: Tyler/Lake Benton #81
*Lyon
Service Area: Tracy
Service Area: Tyler/Lake Benton #81
*Mahnomen
*Marshall
*Murray
*Norman
Olmsted
Facility: Federal Medical Ctr—Rochester
*Otter Tail
Service Area: East Otter Tail County
Service Area: Elbow Lake/Dalton
Service Area: Pelican Rapids #89
*Pine
Population Group: Low Inc—Pine Co
*Pipestone
Service Area: Tyler/Lake Benton #81
Population Group: Low Inc—Pipestone
*Polk
Service Area: Polk/Red Lake
Ramsey
Population Group: Low Inc—Central-Midway
Population Group: Low Inc—Riverview/Dayton's Bluff
Facility: Center International Health
*Red Lake
Service Area: Polk/Red Lake
*Redwood
Service Area: Tracy
*Rock
Population Group: Low Inc—Pipestone
*Sibley
St Louis
Service Area: Cook/Orr
Service Area: Floodwood
Stearns
Service Area: Kimball
Population Group: Low Inc—Belgrade/Brooten
Population Group: Low Inc—Albany
*Todd
*Wadena
Population Group: Low Inc—N Wadena Co
*Waseca
Service Area: Wells
*Wilkin
Service Area: Barnesville

PRIMARY MEDICAL CARE: Minnesota
Service Area Listing

Service Area Name

Barnesville
County—Clay
Parts:
Alliance Township
Barnesville Township
Barnesville City
Comstock City

PRIMARY MEDICAL CARE: Minnesota
Service Area Listing

Service Area Name

Elkton Township
Holy Cross Township
Humboldt Township
Parke Township
Skree Township
Tansem Township
County—Wilkin
Parts:
Atherton Township
Deerhorn Township
Manston Township
Mitchell Township
Prairie View Township
Rothsay City
Tanberg Township
Wolverton City
Bigfork
County—Itasca
Parts:
Alvwood Township
Ardenhurst Township
Balsam Township
Bearville Township
Bigfork City
Bigfork Township
Bowstring Township
Carpenter Township
Effie City
Effie Unorg.
Good Hope Township
Grattan Township
Kinghurst Township
Lake Jessie Township
Liberty Township
Marcell Township
Max Township
Moose Park Township
Northeast Itasca Unorg.
Pomroy Township
Sand Lake Township
Squaw Lake City
Stokes Township
Third River Township
Wirt Township
Cook/Orr
County—St Louis
Parts:
C.T. 151–152
C.T. 155
East Otter Tail County
County—Otter Tail
Parts:
Amor Township
Battle Lake City
Blowers Township
Bluffton City
Bluffton Township
Butler Township
Clitherall City
Clitherall Township
Compton Township
Corliss Township
Dead Lake Township
Deer Creek City
Deer Creek Township
Dent City
Eagle Lake Township
Eastern Township
Edna Township
Effington Township
Elmo Township
Everts Township

PRIMARY MEDICAL CARE: Minnesota
Service Area Listing

Service Area Name

Folden Township
Girard Township
Gorman Township
Henning City
Henning Township
Hobart Township
Homestead Township
Inman Township
Leaf Lake Township
Leaf Mountain Township
New York Mills City
Newton Township
Nidaros Township
Oak Valley Township
Otter Tail Township
Ottertail City
Otto Township
Paddock Township
Parkers Prairie City
Parkers Prairie Township
Perham City
Perham Township
Pine Lake Township
Richville City
Rush Lake Township
Urbank City
Vining City
Wadena City
Woodside Township
Elbow Lake/Dalton
County—Grant
County—Otter Tail
Parts:
Aastad Township
Dalton City
St. Olaf Township
Tumuli Township
Western Township
Floodwood
County—St Louis
Parts:
Alborn Township
Arrowhead Township
Brookston City
Cedar Valley Township
Culver Township
Elmer Township
Fine Lakes Township
Floodwood City
Floodwood Township
Halden Township
Janette Lake Unorg.
Kelsey Township
Lavell Township
McDavitt Township
Meadowlands City
Meadowlands Township
Ness Township
Payne Township
Potshot Lake Unorg.
Prairie Lake Township
Stoney Brook Township
Toivola Township
Van Buren Township
Hawley
County—Clay
Parts:
Cromwell Township
Eglon Township
Felton Township
Felton City
Flowing Township

PRIMARY MEDICAL CARE: Minnesota
Service Area Listing

Service Area Name

Goose Prairie Township
Hagen Township
Hawley City
Hawley Township
Highland Grove Township
Hitterdal City
Keene Township
Riverton Township
Spring Prairie Township
Ulen City
Ulen Township
Kimball
County—Stearns
Parts:
Eden Lake Township
Eden Valley City
Fair Haven Township
Kimball Prairie City
Luxemburg Township
Lynden Township
Maine Prairie Township
Near North—Minneapolis
County—Hennepin
Parts:
C.T. 20–23
C.T. 27–29
C.T. 32–35
C.T. 41–42
Northome/Blackduck
Parts:
Battle Township
Blackduck City
Cormant Township
Durand Township
Funkley City
Hagali Township
Hines Township
Hornet Township
Kelliher City
Kelliher Township
Langor Township
Nebish Township
O'brien Township
Quiring Township
Shooks Township
Shotley Township
Shotley Brook Unorg.
Summit Township
Waskish Township
Woodrow Township
County—Koochiching
Parts:
Big Falls City
East Koochiching Unorg.
Littlefork City
Mizpah City
Nett Lake Unorg.
Northome City
Northome Unorg.
Northwest Koochiching Unorg.
South Koochiching Unorg.
Pelican Rapids #89
County—Otter Tail
Parts:
Candor Township
Dora Township
Dunn Township
Elizabeth Township
Elizabeth City
Erhard City
Erhards Grove Township
Friberg Township

PRIMARY MEDICAL CARE: Minnesota
Service Area Listing

Service Area Name

Lida Township
Maine Township
Maplewood Township
Norwegian Grove Township
Oscar Township
Pelican Rapids City
Pelican Township
Scambler Township
Star Lake Township
Trondhjem Township
Vergas City
Polk/Red Lake
County—Polk
County—Red Lake
Silver Bay
County—Lake
Parts:
Beaver Bay Township
Beaver Bay City
Crystal Bay Township
Lake No. 1 Unorg.
Silver Bay City
Tracy
County—Lyon
Parts:
Amiret Township
Balaton City
Custer Township
Garvin City
Monroe Township
Rock Lake Township
Sodus Township
Tracy City
County—Redwood
Parts:
Gales Township
Johnsonville Township
Lamberton Township
Lamberton City
North Hero Township
Revere City
Springdale Township
Walnut Grove City
Waterbury Township
Tyler/Lake Benton #81
County—Lincoln
Parts:
Diamond Lake Township
Drammen Township
Hope Township
Lake Benton City
Lake Benton Township
Marshfield Township
Tyler City
Verdi Township
County—Lyon
Parts:
Coon Creek Township
Florence City
Shelburne Township
County—Pipestone
Parts:
Aetna Township
Altona Township
Fountain Prairie Township
Ruthton City
Wells
County—Blue Earth
Parts:
Danville Township
Mapleton Township
Mapleton City

PRIMARY MEDICAL CARE: Minnesota
Service Area Listing

Service Area Name

County—Faribault
Parts:
Bricelyn City
Brush Creek Township
Clark Township
Dunbar Township
Easton City
Foster Township
Kiester City
Kiester Township
Lura Township
Minnesota Lake City
Minnesota Lake Township
Seely Township
Walnut Lake Township
Walters City
Wells City
County—Freeborn
Parts:
Alden Township
Alden City
Carlston Township
Conger City
Emmons City
Freeborn Township
Freeborn City
Hartland Township
Hartland City
Manchester Township
Manchester City
Mansfield Township
Nunda Township
Pickerel Lake Township
Twin Lakes City
County—Waseca
Parts:
Byron Township
New Richland Township
New Richland City
Vivian Township
Waldorf City

PRIMARY MEDICAL CARE: Minnesota
Population Group Listing

Population Group

Am In—S. Central Minneapolis (S)
County—Hennepin
Parts:
C.T 87.00
C.T. 94–97
C.T. 100–103
C.T. 109–111
Homeless—North Phillips (S)
County—Hennepin
Parts:
C.T. 57–64
C.T. 69
Low Inc—Albany
County—Stearns
Parts:
Albany Twp
Albany City
Avon City
Avon Twp
Holding Twp
Holdingford City
Krain Twp
St Anthony City
Low Inc—Belgrade/Brooten
County—Stearns
Parts:

PRIMARY MEDICAL CARE: Minnesota
Population Group Listing

Population Group

Belgrade City
Brooten City
Crow Lake Twp
Crow River Twp
Elrosa City
North Fork Twp
Low Inc—Carlton Co
County—Carlton
Parts:
Low Income
Low Inc—Central-Midway
County—Ramsey
Parts:
C.T. 301–302
C.T. 319–327
C.T. 334–340
C.T. 353–355
Low Inc—Inter Falls (#77)
County—Koochiching
Parts:
Intern. Falls City
Island View City
Rainy Lake Unorg
Ranier City
Low Inc—Jackson Co
County—Jackson
Parts:
Low Income
Low Inc—Lake Of The Woods
County—Lake Of The Woods
Parts:
Low Income
Low Inc—Le Sueur Co
County—Le Sueur
Parts:
Low Income
Low Inc—N Minneapolis
County—Hennepin
Parts:
C.T. 7–10
C.T. 13–16
Low Inc—N Wadena Co
County—Wadena
Parts:
Blueberry Twp
Huntersville Twp
Meadow Twp
Menahga City
Nimrod City
Orton Twp
Red Eye Twp
Sebeka City
Shell River Twp
Low Inc—NE Minneapolis
County—Hennepin
Parts:
C.T. 5
C.T. 11
C.T. 17–19
C.T. 24–26
C.T. 30–31
C.T. 36
Low Inc—Pine Co
County—Pine
Parts:
Low Income
Low Inc—Pipestone
County—Pipestone
Parts:
Burke Twp
Eden Twp
Edgerton Twp

PRIMARY MEDICAL CARE: Minnesota
Population Group Listing

Population Group

Elmer Twp
Grange Twp
Gray Twp
Hatfield City
Holland City
Ihlen City
Jasper City
Osborne Twp
Pipestone City
Rock Twp
Sweet Twp
Trosky City
Troy Twp
Woodstock City
County—Rock
Parts:
Battle Plain Twp
Denver Twp
Hardwick City
Jasper City
Rose Dell Twp
Low Inc—Riverview/Dayton's Bluff
County—Ramsey
Parts:
C.T. 306.01
C.T. 307.04
C.T. 309–311
C.T. 315–317
C.T. 330–331
C.T. 342
C.T. 344–345
C.T. 346.01–346.02
C.T. 361
C.T. 370–372
Low Income—Westbrook
County—Cottonwood
Parts:
Amboy Twp
Amo Twp
Ann Twn
Comfrey City
Germantown Twp
Highwater Twp
Jeffers City
Rose Hill Twp
Southbrook Twp
Storden Twp
Storden City
Westbrook Twp
Westbrook City
Native Am—South Phillips (S)
County—Hennepin
Parts:
C.T. 71–73
C.T. 78–79
C.T. 83–86

PRIMARY MEDICAL CARE: Minnesota
Facility Listing

Facility Name

Center International Health 3
County—Ramsey
Federal Medical Ctr—Rochester
County—Olmsted

PRIMARY MEDICAL CARE: Mississippi
County Listing

County Name

*Amite
Service Area: Centreville/Liberty

PRIMARY MEDICAL CARE: Mississippi
County Listing

County Name

*Benton
*Bolivar
Facility: Delta Health Center
*Calhoun
*Carroll
*Chickasaw
*Claiborne
*Clarke
*Clay
*Coahoma
Population Group: Low Inc—Coahoma Co
*Copiah
*Covington
De Soto
Forrest
Service Area: East Leaf River
*George
*Greene
Hancock
Harrison
Population Group: Low Inc—Harrison Co
Hinds
Service Area: Jackson Inner-City
Service Area: West Jackson Inner City
*Holmes
*Humphreys
*Issaquena
Service Area: Issaquena/Sharkey
*Itawamba
Jackson
Service Area: Vancleave/Moss Point
*Jasper
*Jefferson
*Jefferson Davis
*Jones
Population Group: Low Inc—Jones
*Kemper
Lamar
*Lauderdale
Population Group: Low Inc—Lauderdale Co
*Lawrence
*Leake
Madison
*Marion
*Marshall
*Monroe
Population Group: Low Inc—Monroe Co
*Montgomery
*Neshoba
*Newton
*Noxubee
*Panola
*Pearl River
*Perry
*Prentiss
*Quitman
Rankin
Population Group: Low Inc—Eastern Rankin
Population Group: Low Inc—SW Rankin
*Scott
*Sharkey
Service Area: Issaquena/Sharkey
*Simpson
Population Group: Low Inc—Simpson
*Smith
*Sunflower
*Tallahatchie
*Tippah
*Tunica
*Walthall

PRIMARY MEDICAL CARE: Mississippi
County Listing

County Name

*Warren
Population Group: Low Inc—Warren Co
*Webster
*Wilkinson
Service Area: Centreville/Liberty
*Winston
*Yalobusha
*Yazoo

PRIMARY MEDICAL CARE: Mississippi
Service Area Listing

Service Area Name

Centreville/Liberty
County—Amite
County—Wilkinson
East Leaf River
County—Forrest
Parts:
C.T. 1
C.T. 4–6
C.T. 105
Issaquena/Sharkey
County—Issaquena
County—Sharkey
Jackson Inner-City
County—Hinds
Parts:
C.T. 8–11
C.T. 17–20
C.T. 27
C.T. 39
C.T. 103.01
Vancleave/Moss Point
County—Jackson
Parts:
C.T. 402
C.T. 408
C.T. 410
C.T. 412
C.T. 412.99–413.00
C.T. 414–418
West Jackson Inner City
County—Hinds
Parts:
C.T. 24–26
C.T. 30–32

PRIMARY MEDICAL CARE: Mississippi
Population Group Listing

Population Group

Low Inc—Coahoma Co 1
County—Coahoma
Parts:
Low Income
Low Inc—Eastern Rankin
County—Rankin
Parts:
C.T. 201
C.T. 208–209
Low Inc—Harrison Co
County—Harrison
Parts:
Low Income
Low Inc—Jones
County—Jones
Parts:
Low Income
Low Inc—Lauderdale Co
County—Lauderdale
Parts:

PRIMARY MEDICAL CARE: Mississippi
Population Group Listing

Population Group

Low Income
Low Inc—Monroe Co
County—Monroe
Parts:
Low Income
Low Inc—Simpson
County—Simpson
Parts:
Low Income
Low Inc—SW Rankin
County—Rankin
Parts:
C.T. 204.01–204.02
C.T. 210
Low Inc—Warren Co
County—Warren
Parts:
Low Income

PRIMARY MEDICAL CARE: Mississippi
Facility Listing

Facility Name

Delta Health Center
County—Bolivar

PRIMARY MEDICAL CARE: Missouri
County Listing

County Name

*Adair
Population Group: Low Inc—Adair Co
Andrew
*Atchison
Population Group: Low Inc—Atchison Co
*Audrain
Population Group: Low Inc—Audrain Co
*Barry
Population Group: Low Inc—Barry Co
*Barton
Population Group: Low Inc—Barton Co
*Bates
*Benton
*Bollinger
Boone
Population Group: Low Inc—Boone Co
Buchanan
Population Group: Low Inc—Buchanan Co
*Butler
Population Group: Low Inc—Butler
*Caldwell
Population Group: Low Inc—Caldwell Co
*Callaway
Population Group: Low Inc—Callaway
*Camden
Population Group: Low Inc—Camden Co
*Cape Girardeau
Population Group: Low Inc—Cape Girardeau
*Carroll
*Carter
Cass
Population Group: Low Inc—Cass Co
*Cedar
Population Group: Low Inc—Cedar Co
*Chariton
Population Group: Low Inc—Chariton Co
Christian
Population Group: Low Inc—Christian Co
*Clark
Clinton
Population Group: Low Inc—Clinton Co

PRIMARY MEDICAL CARE: Missouri
County Listing

County Name

*Cooper
Population Group: Low Inc—Cooper
*Crawford
Population Group: Low Inc—Crawford Co
*Dade
*Dallas
*Daviess
*De Kalb
Population Group: Low Inc—Dekalb Co
*Dent
Population Group: Low Inc—Dent Co
*Douglas
*Dunklin
Franklin
Population Group: Low Inc—Franklin Co
*Gasconade
Population Group: Low Inc—Gasconade Co
*Gentry
Population Group: Low Inc—Gentry Co
Greene
Population Group: Low Inc—Greene Co
*Grundy
Population Group: Low Inc—Grundy Co
*Harrison
*Henry
Population Group: Low Inc—Henry Co
*Hickory
Population Group: Low Inc—Hickory Co
*Holt
*Howard
Population Group: Low Inc—Howard
*Howell
Population Group: Low Inc—Howell Co
*Iron
Population Group: Low Inc—Iron Co
Jackson
Population Group: Low Inc—Central Kansas City
Population Group: Low Inc—North Kansas City
Jasper
Population Group: Low Inc—Jasper Co
Jefferson
Service Area Festus/De Soto
*Johnson
Population Group: Low Inc—Johnson
*Knox
*Laclede
Population Group: Low Inc—Laclede Co
Lafayette
Population Group: Low Inc—Layfayette
*Lawrence
Population Group: Low Inc—Lawrence Co
*Lewis
Lincoln
*Linn
Population Group: Low Inc—Linn Co
*Livingston
Population Group: Low Inc—Livingston
*Macon
Population Group: Low Inc—Macon Co.
*Madison
Population Group: Low Inc—Madison Co
*Maries
*Marion
Population Group: Low Inc—Marion Co
*McDonald
*Mercer
Population Group: Low Inc—Mercer Co
*Miller
*Moniteau

PRIMARY MEDICAL CARE: Missouri
County Listing

County Name

Population Group: Low Inc—Moniteau Co
*Monroe
Population Group: Low Inc—Monroe Co
*Montgomery
Population Group: Low Inc—Montgomery Co
*Morgan
Population Group: Low Inc—Morgan Co
*New Madrid
Newton
Population Group: Low Inc—Newton Co
*Nodaway
Population Group: Low Inc—Nodaway Co
*Oregon
*Osage
*Ozark
*Pemiscot
Population Group: Low Inc—Pemiscot Co
*Perry
Population Group: Low Inc—Perry Co
*Phelps
Population Group: Low Inc—Phelps Co
*Pike
Population Group: Low Inc—Pike Co
*Polk
Population Group: Low Inc—Polk Co
*Pulaski
*Putnam
*Ralls
Population Group: Low Inc—Ralls Co
*Randolph
Population Group: Low Inc—Randolph Co
Ray
Population Group: Low Inc—Ray Co
*Reynolds
Population Group: Low Inc—Reynolds Co
*Saline
Population Group: Low Inc—Saline Co
*Schuyler
Population Group: Low Inc—Schuyler Co
*Scotland
Population Group: Low Inc—Scotland Co
*Scott
Population Group: Low Inc—Scott Co
*Shannon
*Shelby
Population Group: Low Inc—Shelby Co
*St Clair
Population Group: Low Inc—St. Clair Co
*St Francois
Population Group: Low Inc—St Francois Co
St Louis
Population Group: Low Inc—Kinlock/Berkeley
St Louis City (Indep)
Population Group: Low Inc—Southeast St Louis
Population Group: Low Inc—East Central St Louis
Population Group: Low Inc—West Central St Louis
Population Group: Low Inc—N St Louis City
*Ste Genevieve
Population Group: Low Inc—Ste. Genevieve Co
*Stoddard
*Stone
*Sullivan
*Taney
Population Group: Low Inc—Taney Co

PRIMARY MEDICAL CARE: Missouri
County Listing

County Name

*Texas
*Vernon
Population Group: Low Inc—Vernon Co
Warren
*Washington
*Wayne
Webster
*Worth
Population Group: Low Inc—Worth Co
*Wright

PRIMARY MEDICAL CARE: Missouri
Service Area Listing

Service Area Name

Festus/De Soto
County—Jefferson
Parts:
Big River Township
Central Township
High Ridge Township
Imperial Township
Joachim Township
Meramec Township
Plattin Township
River View Township
Rock Township
Valle Township
Windsor Township

PRIMARY MEDICAL CARE: Missouri
Population Group Listing

Population Group

Low Inc—Adair Co
County—Adair
Parts:
Low Income
Low Inc—Atchison Co
County—Atchison
Parts:
Low Income
Low Inc—Audrain Co
County—Audrain
Parts:
Low Income
Low Inc—Barry Co
County—Barry
Parts:
Low Income
Low Inc—Barton Co
County—Barton
Parts:
Low Income
Low Inc—Boone Co
County—Boone
Parts:
Low Income
Low Inc—Buchanan Co
County—Buchanan
Parts:
Low Income
Low Inc—Butler
County—Butler
Parts:
Low Income
Low Inc—Caldwell Co
County—Caldwell
Parts:
Low Income
Low Inc—Callaway
County—Callaway

PRIMARY MEDICAL CARE: Missouri
Population Group Listing

Population Group

Parts:
Low Income
Low Inc—Camden Co
County—Camden
Parts:
Low Income
Low Inc—Cape Girardeau
County—Cape Girardeau
Parts:
Low Income
Low Inc—Cass Co
County—Cass
Parts:
Low Income
Low Inc—Cedar Co
County—Cedar
Parts:
Low Income
Low Inc—Central Kansas City
County—Jackson
Parts:
C.T. 46–55
C.T. 56.01–56.02
C.T. 57
C.T. 58.01–58.02
C.T. 59.01–59.02
C.T. 60–99
C.T. 100.01–100.02
C.T. 101.03
C.T. 102.01
C.T. 103.01
C.T. 104.01
C.T. 130.01
Low Inc—Chariton Co
County—Chariton
Parts:
Low Income
Low Inc—Christian Co
County—Christian
Parts:
Low Income
Low Inc—Clinton Co
County—Clinton
Parts:
Low Income
Low Inc—Cooper
County—Cooper
Parts:
Low Income
Low Inc—Crawford Co
County—Crawford
Parts:
Low Income
Low Inc—Dekalb Co
County—De Kalb
Parts:
Low Income
Low Inc—Dent Co
County—Dent
Parts:
Low Income
Low Inc—East Central St Louis
County—St Louis City (Indep)
Parts:
C.T. 1171–1172
C.T. 1181
C.T. 1184
C.T. 1186
C.T. 1211
C.T. 1214
C.T. 1222
C.T. 1255–1256

PRIMARY MEDICAL CARE: Missouri
Population Group Listing

Population Group

Low Inc—Franklin Co
County—Franklin
Parts:
Low Income
Low Inc—Gasconade Co
County—Gasconade
Parts:
Low Income
Low Inc—Gentry Co
County—Gentry
Parts:
Low Income
Low Inc—Greene Co
County—Greene
Parts:
Low Income
Low Inc—Grundy Co
County—Grundy
Parts:
Low Income
Low Inc—Henry Co
County—Henry
Parts:
Low Income
Low Inc—Hickory Co
County—Hickory
Parts:
Low Income
Low Inc—Howard
County—Howard
Parts:
Low Income
Low Inc—Howell Co
County—Howell
Parts:
Low Income
Low Inc—Iron Co
County—Iron
Parts:
Low Income
Low Inc—Jasper Co
County—Jasper
Parts:
Low Income
Low Inc—Johnson
County—Johnson
Parts:
Low Income
Low Inc—Kinlock/Berkeley
County—St Louis
Parts:
C.T. 2127–2129
C.T. 2134
Low Inc—Laclede Co
County—Laclede
Parts:
Low Income
Low Inc—Lawrence Co
County—Lawrence
Parts:
Low Income
Low Inc—Layfayette
County—Lafayette
Parts:
Low Income
Low Inc—Linn Co
County—Linn
Parts:
Low Income
Low Inc—Livingston
County—Livingston
Parts:

PRIMARY MEDICAL CARE: Missouri
Population Group Listing

Population Group

Low Income
Low Inc—Macon Co.
County—Macon
Parts:
Low Income
Low Inc—Madison Co
County—Madison
Parts:
Low Income
Low Inc—Marion Co
County—Marion
Parts:
Low Income
Low Inc—Mercer Co
County—Mercer
Parts:
Low Income
Low Inc—Moniteau Co
County—Moniteau
Parts:
Low Income
Low Inc—Monroe Co
County—Monroe
Parts:
Low Income
Low Inc—Montgomery Co
County—Montgomery
Parts:
Low Income
Low Inc—Morgan Co
County—Morgan
Parts:
Low Income
Low Inc—N St Louis City
County—St Louis City (Indep)
Parts:
C.T. 1053–1055
C.T. 1061–1067
C.T. 1071–1077
C.T. 1081–1082
C.T. 1085
C.T. 1096–1097
C.T. 1101–1105
C.T. 1111–1115
C.T. 1122–1123
C.T. 1192
C.T. 1201–1203
C.T. 1211–1213
C.T. 1257
C.T. 1266–1267
Low Inc—Newton Co
County—Newton
Parts:
Low Income
Low Inc—Nodaway Co
County—Nodaway
Parts:
Low Income
Low Inc—North Kansas City
County—Jackson
Parts:
C.T. 1–4
C.T. 5.01
C.T. 6–27
C.T. 28.01–28.02
C.T. 29–34
C.T. 35.01–35.02
C.T. 36.01–36.02
C.T. 37–45
C.T. 59.01
Low Inc—Pemiscot Co
County—Pemiscot
Parts:
Low Income
Low Inc—Perry Co
County—Perry
Parts:
Low Income
Low Inc—Phelps Co
County—Phelps
Parts:
Low Income
Low Inc—Pike Co
County—Pike
Parts:
Low Income
Low Inc—Polk Co
County—Polk
Parts:
Low Income
Low Inc—Ralls Co
County—Ralls
Parts:
Low Income
Low Inc—Randolph Co
County—Randolph
Parts:
Low Income
Low Inc—Ray Co
County—Ray
Parts:
Low Income
Low Inc—Reynolds Co
County—Reynolds
Parts:
Low Income
Low Inc—Saline Co
County—Saline
Parts:
Low Income
Low Inc—Schuyler Co
County—Schuyler
Parts:
Low Income
Low Inc—Scotland Co
County—Scotland
Parts:
Low Income
Low Inc—Scott Co
County—Scott
Parts:
Low Income
Low Inc—Shelby Co
County—Shelby
Parts:
Low Income
Low Inc—Southeast St Louis
County—St Louis City (Indep)
Parts:
C.T. 1014–1015
C.T. 1018
C.T. 1018.99
C.T. 1155–1157
C.T. 1164–1165
C.T. 1173–1174
C.T. 1185
C.T. 1221
C.T. 1224
C.T. 1231–1235
C.T. 1241–1243
C.T. 1246
Low Inc—St Francois Co
County—St Francois
Parts:
Low Income
Low Inc—St. Clair Co
County—St Clair
Parts:
Low Income
Low Inc—Ste. Genevieve Co
County—Ste Genevieve
Parts:
Low Income
Low Inc—Taney Co
County—Taney
Parts:
Low Income
Low Inc—Vernon Co
County—Vernon
Parts:
Low Income
Low Inc—West Central St Louis
County—St Louis City (Indep)
Parts:
C.T. 1051.98
C.T. 1052
C.T. 1121
C.T. 1124
C.T. 1191–1193
Low Inc—Worth Co
County—Worth
Parts:
Low Income

PRIMARY MEDICAL CARE: Montana
County Listing

County Name

*Big Horn
*Blaine
Service Area: Havre/Chinook
*Broadwater
*Carbon
Service Area: Bridger
*Carter
Service Area: Fallon
*Chouteau
Service Area: Big Sandy
Service Area: Fort Benton
*Custer
Service Area: Fallon
*Daniels
*Dawson
*Fallon
Service Area: Fallon
*Gallatin
Service Area: Ennis/W. Yellowstone
Service Area: Three Forks/Manhattan
*Garfield
*Glacier
*Golden Valley
*Granite
*Hill
Service Area: Havre/Chinook
*Jefferson
*Judith Basin
*Lewis And Clark
Service Area: Choteau
Service Area: Lincoln
*Lincoln
Service Area: Eureka
Population Group: Low Inc—Libby/Troy
*Madison
Service Area: Ennis/W. Yellowstone
*McCone
*Mineral

PRIMARY MEDICAL CARE: Montana
County Listing

Service Area Name

*Missoula
Service Area: Seely Lake
*Musselshell
*Park
*Petroleum
*Phillips
*Pondera
Service Area: Conrad
*Powder River
*Powell (g)
Facility: Montana State Prs
*Prairie
*Roosevelt
Service Area: Culbertson
Service Area: Poplar/Wolf Point
*Rosebud
Service Area: Forsyth/Colstrip
*Sanders
Service Area: Hot Springs
*Sheridan
Population Group: Low Inc—Sheridan County
*Silver Bow
Population Group: Low Inc—Silver Bow Co
*Sweet Grass
*Teton
Service Area: Choteau
Service Area: Conrad
*Toole
Service Area: Sunburst
*Treasure
Service Area: Forsyth/Colstrip
*Valley
*Wibaux
Service Area: Fallon
*Yellowstone Park
Service Area: Gardiner/Yellowstone (MT/WY)

PRIMARY MEDICAL CARE: Montana
Service Area Listing

Service Area Name

Big Sandy
County—Chouteau
Parts:
Big Sandy Division
Bridger
County—Carbon
Parts:
Carbon East Division
Fromberg-Bridger Division
Joliet Division
Choteau
County—Lewis And Clark
Parts:
Augusta Division
County—Teton
Parts:
Choteau Division
Fairfield Division
Conrad
County—Pondera
County—Teton
Parts:
Dutton-Power Division
Culbertson
County—Roosevelt
Parts:
East Roosevelt Division
Ennis/W. Yellowstone
County—Gallatin
Parts:
West Yellowstone Division
County—Madison
Parts:
Harrison Division
Madison Valley Division
Virginia City Division
Eureka
County—Lincoln
Parts:
Eureka Division
Fallon
County—Carter
County—Custer
Parts:
Shirley-Ismay Division
County—Carter
County—Fallon
County—Wibaux
Forsyth/Colstrip
County—Rosebud
County—Treasure
Fort Benton
County—Chouteau
Parts:
Fort Benton Division
Geraldine Division
Gardiner/Yellowstone (MT/WY)
County—Yellowstone Park
Parts:
Yellowstone National Park Divisi
Havre/Chinook
County—Blaine
County—Hill
Hot Springs
County—Sanders
Parts:
Flathead Division
Lincoln
County—Lewis And Clark
Parts:
Lincoln Division
Poplar/Wolf Point
County—Roosevelt
Parts:
Fort Peck Reservation Division
Seely Lake
County—Missoula
Parts:
Seeley Lake-Blackfoot Valley Div
Sunburst
County—Toole
Parts:
Sunburst Division
Three Forks/Manhattan
County—Gallatin
Parts:
Manhattan Division
Three Forks Division

PRIMARY MEDICAL CARE: Montana
Population Group Listing

Population Group

Low Inc—Libby/Troy
County—Lincoln
Parts:
Libby Division
Troy Division
Low Inc—Sheridan County
County—Sheridan
Parts:
Low Income
Low Inc—Silver Bow Co
County—Silver Bow
Parts:
Low Income

PRIMARY MEDICAL CARE: Montana
Facility Listing

Facility Name

Montana State Prs
County—Powell

PRIMARY MEDICAL CARE: Nebraska
County Listing

County Name

*Arthur
*Blaine
*Box Butte
Population Group: Low Inc—Box Butte Co
Cass
*Custer
Service Area: Arnold
*Dawes
Service Area: Crawford
*Deuel
Service Area: Julesburg (CO/NE)
*Dundy
*Garden
*Harlan
*Johnson
*Kimball
Lancaster
Facility: NE St DOC Facility—Lincoln
*Lincoln
Service Area: Arnold
*Logan
Service Area: Arnold
Service Area: Stapleton No 1
*McPherson
*Nance
*Sheridan
*Sherman
*Sioux
Service Area: Crawford
*Thomas

PRIMARY MEDICAL CARE: Nebraska
Service Area Listing

Service Area Name

Arnold
County—Custer
Parts:
Arnold Township
Cliff Township
Custer Township
Delight Township
Elim Township
Grant Township
Hayes Township
Triumph Township
Wayne Township
Wood River Township
County—Lincoln
Parts:
Antelope Precinct
Garfield Precinct
County—Logan
Parts:
Gandy Precinct

PRIMARY MEDICAL CARE: Nebraska
Service Area Listing

Service Area Name

Logan Precinct
Stapleton No. 2 Precinct
Crawford
County—Dawes
Parts:
Precinct No. 7
Precinct No. 10
Precinct No. 11
Precinct No. 9
County—Sioux
Julesburg (CO/NE)
County—Deuel
Stapleton No 1
County—Logan
Parts:
Stapleton No. 1 Precinct

PRIMARY MEDICAL CARE: Nebraska
Population Group Listing

Population Group

Low Inc—Box Butte Co
County—Box Butte
Parts:
Low Income

PRIMARY MEDICAL CARE: Nebraska
Facility Listing

Facility Name

NE St DOC Facility—Lincoln
County—Lancaster

PRIMARY MEDICAL CARE: Nevada
County Listing

County Name

Carson City (Indep)
Population Group: Low Inc—E Carson City (Indep)
Population Group: Native Am-Washoe Indian Tribe (S)
Facility: Nv St Corr Fac (North)
Facility: Sierra Family Health Ctr Clinic
*Churchill
Population Group: Native Am-Fallon Res & Colony (S)
Clark
Service Area: Indian Springs
Service Area: Laughlin
Service Area: Moapa Valley
Service Area: N Central Las Vegas
Service Area: N.E. Las Vegas
Service Area: Virgin Valley
Facility: Nv St Corr Fac (South)
*Douglas
Population Group: Am Ind—Dresslerville (S)
*Elko
Service Area: Carlin
Service Area: Jackpot
Service Area: Jarbidge
Service Area: Montello
Service Area: Mountain City Division
Service Area: Wells
Service Area: West Wendover
*Esmerelda
*Eureka
*Humboldt
Population Group: Native Am-Winnemucca Colony (S)

PRIMARY MEDICAL CARE: Nevada
County Listing

County Name

Population Group: Native Am-Fort Mcdermitt Res (S)
*Lander
*Lincoln
*Lyon
*Mineral
*Nye
*Pershing
*Storey
Washoe
Service Area: Gerlach
Service Area: Wadsworth
Population Group: Low Inc—Reno/Sparks
*White Pine (g)
Facility: Nv St Corr Fac (East)

PRIMARY MEDICAL CARE: Nevada
Service Area Listing

Service Area Name

Carlin
County—Elko
Parts:
Carlin Division
Gerlach
County—Washoe
Parts:
Gerlach Division
Indian Springs
County—Clark
Parts:
C.T. 58.98
Jackpot
County—Elko
Parts:
Jackpot Division
Jarbidge
County—Elko
Parts:
Jarbidge Division
Laughlin
County—Clark
Parts:
C.T. 57
Moapa Valley
County—Clark
Parts:
C.T. 59
Montello
County—Elko
Parts:
Montello Division
Mountain City Division
County—Elko
Parts:
Mountain City Division
N Central Las Vegas
County—Clark
Parts:
C.T. 2.01
C.T. 3.01–3.02
C.T. 4
C.T. 7
C.T. 34.01
C.T. 35
C.T. 36.02
C.T. 37–38
C.T. 39.97–39.98
C.T. 40–46
N.E. Las Vegas
County—Clark
Parts:

PRIMARY MEDICAL CARE: Nevada
Service Area Listing

Service Area Name

C.T. 47.02–47.06
C.T. 48.97–48.98
Virgin Valley
County—Clark
Parts:
C.T. 56.02–56.03
Wadsworth
County—Washoe
Parts:
Pyramid Lake Division
Wells
County—Elko
Parts:
Wells Division
West Wendover
County—Elko
Parts:
West Wendover Division

PRIMARY MEDICAL CARE: Nevada
Population Group Listing

Population Group

Am Ind—Dresslerville (S)
County—Douglas
Parts:
Dresslerville Ranch
Low Inc—E Carson City (Indep)
County—Carson City (Indep)
Parts:
C.T. 1
C.T. 5–6
C.T. 9–10
Low Inc—Reno/Sparks
County—Washoe
Parts:
C.T. 18.00
C.T. 1–3
C.T. 7
C.T. 9
C.T. 10.04
C.T. 14–15
C.T. 17
C.T. 19
C.T. 21.01
C.T. 22.03–22.04
C.T. 28
C.T. 33.01
Native Am-Fallon Res & Colony (S)
County—Churchill
Parts:
Fallon Reservation
Fallon Colony
Native Am-Fort Mcdermitt Res (S)
County—Humboldt
Parts:
Fort Mcdermitt Res
Native Am-Washoe Indian Tribe (S)
County—Carson City (Indep)
Parts:
Carson Colony
Native Am-Winnemucca Colony (S)
County—Humboldt
Parts:
Winnemucca Colony

PRIMARY MEDICAL CARE: Nevada
Facility Listing

Facility Name

Nv St Corr Fac (East)
County—White Pine

PRIMARY MEDICAL CARE: Nevada
Facility Listing

Facility Name

Nv St Corr Fac (North)
County—Carson City (Indep)
Nv St Corr Fac (South)
County—Clark
Sierra Family Health Ctr Clinic
County—Carson City (Indep)

PRIMARY MEDICAL CARE: New Hampshire
County Listing

County Name

*Coos
Service Area: Upper Connecticut Valley (NH/VT)
Population Group: Low Inc—Berlin
*Grafton
Service Area: Baker River Valley
Hillsborough
Service Area: Hillsboro/Weare
Population Group: Low Inc—Central Manchester
Population Group: Low Inc—E Nashua
Merrimack
Service Area: Hillsboro/Weare
Rockingham
Service Area: Raymond
*Sullivan
Service Area: Hillsboro/Weare

PRIMARY MEDICAL CARE: New Hampshire
Service Area Listing

Service Area Name

Baker River Valley
County—Grafton
Parts:
Rumney Town
Warren Town
Wentworth Town
Hillsboro/Weare
County—Hillsborough
Parts:
Antrim Town
Deering Town
Hillsborough Town
Weare Town
Windsor Town
County—Merrimack
Parts:
Henniker Town
County—Sullivan
Parts:
Washington Town
Raymond
County—Rockingham
Parts:
Deerfield Town
Epping Town
Fremont Town
Nottingham Town
Raymond Town
Upper Connecticut Valley (NH/VT)
County—Coos
Parts:
Clarksville Town
Colebrook Town
Columbia Town
Dixville Township
Errol Town
Millsfield Township
Pittsburg Town
Stewartstown Town

PRIMARY MEDICAL CARE: New Hampshire
Service Area Listing

Service Area Name

Stratford Town
Wentworth Location

PRIMARY MEDICAL CARE: New Hampshire
Population Group Listing

Population Group

Low Inc—Berlin
County—Coos
Parts:
Berlin City
Cambridge Twp
Dummer Town
Gorham Town
Kilkenny Twp
Milan Town
Randolph Town
Shelburne Town
Stark Town
Success Twp
Low Inc—Central Manchester
County—Hillsborough
Parts:
C.T. 4–5
C.T. 13–16
C.T. 19–20
Low Inc—E Nashua
County—Hillsborough
Parts:
C.T. 105–109

PRIMARY MEDICAL CARE: New Jersey
County Listing

County Name

Atlantic
Population Group: Low Inc/MFW—Atlantic Co
Camden
Population Group: Low Inc—Camden
*Cumberland
Population Group: Low Inc/MFW—Cumberland Co
Facility: FCI Fairton
Essex
Service Area: City Of Orange
Service Area: East Orange City
Facility: St. Michaels Med Ctr Pc Clinics
Hudson
Service Area: Jersey City
Mercer
Population Group: Medicaid—Trenton City
Ocean
Population Group: Low Inc—Lakewood
Passaic
Service Area: Passaic
Salem
Population Group: Low Inc/MFW—West Salem Co
Union
Facility: INS Medical Facility—Elizabeth

PRIMARY MEDICAL CARE: New Jersey
Service Area Listing

Service Area Name

City Of Orange
County—Essex
Parts:
C.T. 181–189
East Orange City
County—Essex

PRIMARY MEDICAL CARE: New Jersey
Service Area Listing

Service Area Name

Parts:
East Orange City
Jersey City
County—Hudson
Parts:
C.T. 1–8
C.T. 9.01–9.02
C.T. 10–11
C.T. 12.01–12.02
C.T. 13–15
C.T. 16.01–16.02
C.T. 17–40
C.T. 41.01–41.02
C.T. 42–56
C.T. 58.01–58.02
C.T. 59–63
Passaic
County—Passaic
Parts:
C.T. 1752–1755
C.T. 1758–1759

PRIMARY MEDICAL CARE: New Jersey
Population Group Listing

Population Group

Low Inc—Camden 4
County—Camden
Parts:
C.T.6001–6020
Low Inc—Lakewood
County—Ocean
Parts:
Lakewood Town
Low Inc/MFW—Atlantic Co
County—Atlantic
Parts:
Low Income/MFW
Low Inc/MFW—Cumberland Co
County—Cumberland
Parts:
Low-Income/MFW
Low Inc/MFW—West Salem Co
County—Salem
Parts:
C.T. 202–206
C.T. 213–217
C.T. 219–221
Medicaid—Trenton City
County—Mercer
Parts:
C.T. 1–17
C.T. 19–24

PRIMARY MEDICAL CARE: New Jersey
Facility Listing

Facility Name

FCI Fairton 1
County—Cumberland
INS Medical Facility—Elizabeth
County—Union
St. Michaels Med Ctr Pc Clinics
County—Essex

PRIMARY MEDICAL CARE: New Mexico
County Listing

County Name

Bernalillo
Service Area: North Valley
Population Group: Low Inc/Hmlss—Albuquerque Central

PRIMARY MEDICAL CARE: New Mexico
County Listing

County Name

*Catron
*Chaves
  Population Group: Low Inc—Chaves
*Cibola
Dona Ana
  Service Area: Hatch
  Service Area: Southern Dona Ana
*Eddy
*Grant
  Service Area: Cliff/Gila
*Guadalupe
*Harding
*Hidalgo
*Lea
  Service Area: Jal/Eunice
*Lincoln
  Service Area: Carrizozo
  Service Area: Corona
*McKinley
*Mora
*Otero
  Service Area: Cloudcroft
*Quay
*Rio Arriba
  Service Area: Coyote
  Service Area: Penasco/Truchas/Embudo
  Service Area: Rio Chama
  Service Area: Tierra Amarilla
  Service Area: Western Rio Arriba
*Roosevelt
  Population Group: Low Inc—Roosevelt Co
*San Juan
  Population Group: Am In—San Juan Co
*San Miguel
  Service Area: Pecos/Villanueva
Sandoval
  Service Area: Cuba
  Service Area: Southern Sandoval
Santa Fe
  Service Area: Santa Fe/La Familia
*Sierra
*Socorro
  Service Area: Claunch
  Service Area: Magdalena
*Taos
  Service Area: Penasco/Truchas/Embudo
  Service Area: Questo/Arroyo Hondo
*Torrance
*Union
Valencia

PRIMARY MEDICAL CARE: New Mexico
Service Area Listing

Service Area Name

Carrizozo
  County—Lincoln
    Parts:
      Carrizozo Division
Claunch
  County—Socorro
    Parts:
      Claunch Division
Cliff/Gila
  County—Grant
    Parts:
      Pinos Altos Division
      Tyrone Division
Cloudcroft
  County—Otero
    Parts:
      Southeast Otero Division

PRIMARY MEDICAL CARE: New Mexico
Service Area Listing

Service Area Name

Corona
  County—Lincoln
    Parts:
      Corona Division
Coyote
  County—Rio Arriba
    Parts:
      Coyote Division
Cuba
  County—Sandoval
    Parts:
      Cuba Division
      Jemez Division
Hatch
  County—Dona Ana
    Parts:
      Hatch Division
Jal/Eunice
  County—Lea
    Parts:
      Eunice Division
      Jal Division
Magdalena
  County—Socorro
    Parts:
      Magdalena Division
North Valley
  County—Bernalillo
    Parts:
      C.T. 29
      C.T. 30.01–30.02
      C.T. 31
      C.T. 32.01–32.02
      C.T. 35.01–35.02
      C.T. 36
Pecos/Villanueva
  County—San Miguel
    Parts:
      Pecos Division
      Villanueva Division
Penasco/Truchas/Embudo
  County—Rio Arriba
    Parts:
      Chimayo Division
      Dixon Division
  County—Taos
    Parts:
      Penasco Division
      Picuris Division
Questo/Arroyo Hondo
  County—Taos
    Parts:
      Arroyo Hondo Division
      Questa Division
Rio Chama
  County—Rio Arriba
    Parts:
      Rio Chama CCD
      Rio Chama Division
Santa Fe/La Familia
  County—Santa Fe
    Parts:
      C.T. 3
      C.T. 7–9
      C.T. 10.02
      C.T. 12
      C.T. 103.04
Southern Dona Ana
  County—Dona Ana
    Parts:
      Anthony Division
      South Dona Ana Division

PRIMARY MEDICAL CARE: New Mexico
Service Area Listing

Service Area Name

Southern Sandoval
  County—Sandoval
    Parts:
      C.T. 103–104
      C.T. 105.01–105.02
Tierra Amarilla
  County—Rio Arriba
    Parts:
      Tierra Amarilla Division
      Vallecitas Division
Western Rio Arriba
  County—Rio Arriba
    Parts:
      Jicarilla Division
      Western Rio Arriba Division

PRIMARY MEDICAL CARE: New Mexico
Population Group Listing

Population Group

Am In—San Juan Co
  County—San Juan
    Parts:
      American Indian
Low Inc—Chaves
  County—Chaves
    Parts:
      Low Income
Low Inc—Roosevelt Co
  County—Roosevelt
    Parts:
      Low Income
Low Inc/Hmlss—Albuquerque Central
  County—Bernalillo
    Parts:
      C.T. 14–15
      C.T. 20–21
      C.T. 25–28

PRIMARY MEDICAL CARE: New York
County Listing

County Name

Albany
  Service Area: Westerlo-Rensselaerville
*Allegany
  Service Area: Arcade
  Service Area: Letchworth
  Service Area: Wellsville
Bronx
  Service Area: Hunts Point
  Service Area: Morris Heights
  Population Group: Low Inc—Mott Haven
  Population Group: Low Inc—High Bridge
  Population Group: Low Inc—Morrisania
  Population Group: Low Inc—Soundview
  Population Group: Low Inc—West Farms
  Facility: Jacobi Women's Health Center
  Facility: NYC Corr. Fac./Rikers Island
Broome
  Service Area: Deposit
*Cattaraugus
  Service Area: Arcade
  Service Area: Randolph/Ellicottville
  Service Area: Tri-County
Cayuga
  Service Area: Aurora
  Service Area: Cato
  Population Group: Low Inc—Groton/Moravia
  Population Group: Low Inc—Oswego City
Chautauqua

PRIMARY MEDICAL CARE: New York
County Listing

County Name

Service Area: Dunkirk-Fredonia
Service Area: Tri-County
Service Area: Union City/Corry
Service Area: Westfield
*Clinton
Service Area: Dannemora
Population Group: Low Inc—Malone
*Cortland
Population Group: Low Inc—Cortland
*Delaware
Service Area: Deposit
Service Area: Margaretville/Andes
Population Group: Low Inc—Hobart/Stamford
Dutchess
Population Group: Low Inc—Beacon
Erie
Service Area: Black Rock/Riverside
Service Area: Ellicott/Lower Westside
Service Area: P.S. 84
Service Area: Tri-County
Facility: INS Med Facility-Batavia
*Essex
Service Area: Central Adirondack
Service Area: East Central Essex
Service Area: Warrensburg
Population Group: Low Inc—Schroon-Ticonderoga
*Franklin
Population Group: Low Inc—Canton/Potsdam
Population Group: Low Inc—Malone
Facility: Bare Hill Corr Fac
Facility: Chateaugay State Corr. Facility
Facility: FCI Raybrook
*Fulton
Facility: Hale Creek ASATCA
*Genesee
Service Area: Batavia/Attica/Bennington
*Greene
*Hamilton
Service Area: Central Adirondack
Service Area: Webb
Herkimer
Service Area: Webb
*Jefferson
Service Area: Alexandria Bay
Service Area: Gouverneur
Population Group: Low Inc—Watertown
Kings
Service Area: Bedford-Stuyvesant
Service Area: Bushwick
Service Area: Coney Island
Service Area: Crown Heights—Brooklyn
Service Area: East NY-Brooklyn
Service Area: Williamsburg
*Lewis
Service Area: Boonville
Livingston
Service Area: Letchworth
Monroe
Service Area: Jordan
Service Area: Westside (Rochester)
New York
Service Area: Alphabet City—Lower East Side
Service Area: Clinton
Service Area: Washington Heights—Inwood
Service Area: West Central Harlem
Population Group: Homeless—Chelsea/Ward's Island

PRIMARY MEDICAL CARE: New York
County Listing

County Name

Population Group: Low Inc—East Harlem
Facility: INS Medical Facility—New York
Niagara
Service Area: Newfane
Service Area: Niagara Falls
Oneida
Service Area: Boonville
Population Group: Low Inc —Utica
Population Group: Low Income—Rome PCSa
Onondaga
Population Group: Low Inc—Syracuse
Orange
Population Group: Low Inc—Middletown
Population Group: Low Inc—Newburgh City
Population Group: MFW—Goshen/Warwick
Population Group: MFW—Walden
Orleans
Service Area: Oak Orchard
Oswego
Service Area: Pulaski
Population Group: Low Inc—Fulton
Population Group: Low Inc—Oswego City
Queens
Service Area: Long Island City
Population Group: Medicaid—Rockaway
Facility: INS Med Facility Queens
Rockland
Population Group: Low Inc—Monsey/New Square
Schoharie
Population Group: Low Inc—Hobart/Stamford
*Seneca
Service Area: South Seneca
*St Lawrence
Service Area: Alexandria Bay
Service Area: Gouverneur
Service Area: Star Lake
Population Group: Low Inc—Canton/Potsdam
Population Group: Low Inc—Ogdensburg
*Steuben
Service Area: Elkland (NY/PA)
*Sullivan
Service Area: Cochecton
*Tompkins
Population Group: Low Inc—Groton/Moravia
*Ulster
Population Group: MFW—New Paltz
Facility: Highland Residential Center
Warren
Service Area: Warrensburg
Population Group: Low Inc—Schroon-Ticonderoga
Washington
Population Group: Low Inc—Schroon-Ticonderoga
*Wyoming
Service Area: Arcade
Service Area: Batavia/Attica/Bennington
Service Area: Letchworth
Facility: Attica Corr Fac

PRIMARY MEDICAL CARE: New York
Service Area Listing

Service Area Name

Alexandria Bay
County—Jefferson

PRIMARY MEDICAL CARE: New York
Service Area Listing

Service Area Name

Parts:
Alexandria Town
Cape Vincent Town
Clayton Town
Lyme Town
Orleans Town
Philadelphia Town
Theresa Town
County—St Lawrence
Parts:
Hammond Town
Alphabet City—Lower East Side
County—New York
Parts:
C.T. 2.01–2.02
C.T. 6
C.T. 8
C.T. 10.01–10.02
C.T. 12
C.T. 14.01–14.02
C.T. 16
C.T. 18
C.T. 20
C.T. 22.01–22.02
C.T. 24–25
C.T. 26.01–26.02
C.T. 27–29
C.T. 30.01–30.02
C.T. 31–32
C.T. 34
C.T. 36.01–36.02
C.T. 38
C.T. 40–43
C.T. 45
C.T. 55.02
C.T. 57
Arcade
County—Allegany
Parts:
Centerville Town
Rushford Town
County—Cattaraugus
Parts:
Farmersville Town
Freedom Town
Machias Town
Yorkshire Town
County—Wyoming
Parts:
Arcade Town
Eagle Town
Java Town
Orangeville Town
Sheldon Town
Wethersfield Town
Aurora
County—Cayuga
Parts:
Genoa Town
Ledyard Town
Scipio Town
Springport Town
Venice Town
Batavia/Attica/Bennington
County—Genesee
County—Wyoming
Parts:
Attica Town
Bennington Town
Bedford-Stuyvesant
County—Kings
Parts:

PRIMARY MEDICAL CARE: New York
Service Area Listing

Service Area Name

C.T. 11
C.T. 23
C.T. 25
C.T. 27
C.T. 29.01–29.02
C.T. 31
C.T. 33
C.T. 35
C.T. 179
C.T. 181
C.T. 183
C.T. 185.01–185.02
C.T. 187
C.T. 189
C.T. 191
C.T. 193
C.T. 195
C.T. 197
C.T. 199
C.T. 201
C.T. 203
C.T. 205
C.T. 207
C.T. 213
C.T. 215
C.T. 217
C.T. 219
C.T. 221
C.T. 223
C.T. 225
C.T. 227
C.T. 229
C.T. 231
C.T. 233
C.T. 235
C.T. 237
C.T. 239
C.T. 241
C.T. 243
C.T. 245
C.T. 247
C.T. 249
C.T. 251
C.T. 253
C.T. 255
C.T. 257
C.T. 259.01–259.02
C.T. 261
C.T. 263
C.T. 265
C.T. 267
C.T. 269
C.T. 271.01–271.02
C.T. 273
C.T. 275
C.T. 277
C.T. 279
C.T. 281
C.T. 283
C.T. 285.01–285.02
C.T. 287
C.T. 289
C.T. 291
C.T. 293
C.T. 295
C.T. 297
C.T. 299
C.T. 301
C.T. 303
C.T. 307
C.T. 309
C.T. 311

PRIMARY MEDICAL CARE: New York
Service Area Listing

Service Area Name

C.T. 313
C.T. 315
C.T. 317.01–317.02
C.T. 319
C.T. 321
C.T. 323
C.T. 325
C.T. 327
C.T. 329
C.T. 331
C.T. 333
C.T. 335
C.T. 337
C.T. 339
C.T. 341
C.T. 343
C.T. 345
C.T. 347
C.T. 349
C.T. 351
C.T. 353
C.T. 365.01–365.02
C.T. 367
C.T. 369
C.T. 371
C.T. 373
C.T. 375
C.T. 377
C.T. 379
C.T. 381
C.T. 383
C.T. 385
C.T. 387

Black Rock/Riverside
County—Erie
Parts:
C.T. 55–59

Boonville
County—Lewis
Parts:
Greig Town
Lewis Town
Leyden Town
Lyonsdale Town
Turin Town
West Turin Town
County—Oneida
Parts:
Ava Town
Boonville Town
Forestport Town

Bushwick
County—Kings
Parts:
C.T. 389
C.T. 391
C.T. 393
C.T. 395
C.T. 397
C.T. 399
C.T. 401
C.T. 403
C.T. 405
C.T. 407
C.T. 409
C.T. 411
C.T. 413
C.T. 415
C.T. 417
C.T. 419
C.T. 421
C.T. 423

PRIMARY MEDICAL CARE: New York
Service Area Listing

Service Area Name

C.T. 425
C.T. 427
C.T. 429
C.T. 431
C.T. 433
C.T. 435
C.T. 437
C.T. 439
C.T. 441
C.T. 443
C.T. 445
C.T. 447
C.T. 453
C.T. 455.97–455.98
C.T. 465
C.T. 473
C.T. 477
C.T. 481
C.T. 483
C.T. 487
C.T. 489
C.T. 491
C.T. 493
C.T. 495
C.T. 497
C.T. 501
C.T. 503
C.T. 505
C.T. 511
C.T. 513
C.T. 527
C.T. 1142.01–1142.02

Cato
County—Cayuga
Parts:
Cato Town
Conquest Town
Ira Town
Victory Town

Central Adirondack
County—Essex
Parts:
Newcomb Town
County—Hamilton
Parts:
Indian Lake Town
Long Lake Town

Clinton
County—New York
Parts:
C.T. 95
C.T. 97
C.T. 99
C.T. 101
C.T. 103
C.T. 109
C.T. 111
C.T. 113
C.T. 115
C.T. 117
C.T. 119
C.T. 121
C.T. 125
C.T. 127
C.T. 129
C.T. 133
C.T. 135

Cochecton
County—Sullivan
Parts:
Callicoon Town
Cochecton Town

PRIMARY MEDICAL CARE: New York
Service Area Listing

Service Area Name

Delaware Town
Fremont Town
Highland Town
Tusten Town
Coney Island
County—Kings
Parts:
C.T. 326
C.T. 328
C.T. 330
C.T. 340
C.T. 342
C.T. 348.01
C.T. 352
Crown Heights—Brooklyn
County—Kings
Parts:
C.T. 508
C.T. 794
C.T. 796
C.T. 798
C.T. 800
C.T. 802
C.T. 804
C.T. 806
C.T. 810
C.T. 812
C.T. 814
C.T. 816
C.T. 818
C.T. 820
C.T. 822
C.T. 824
C.T. 856
C.T. 864
C.T. 866
C.T. 868
C.T. 870
C.T. 872
C.T. 874.01–874.02
C.T. 876
C.T. 878
C.T. 880
C.T. 882
C.T. 884
C.T. 886
C.T. 888
C.T. 890
C.T. 892
C.T. 894
C.T. 896
C.T. 898
C.T. 900
C.T. 902
Dannemora
County—Clinton
Parts:
Dannemora Town
Saranac Town
Deposit
County—Broome
Parts:
Colesville Town
Sanford Town
Windsor Town
County—Delaware
Parts:
Deposit Town
Tompkins Town
Dunkirk-Fredonia
County—Chautauqua
Parts:

PRIMARY MEDICAL CARE: New York
Service Area Listing

Service Area Name

Arkwright Town
Charlotte Town
Dunkirk City
Dunkirk Town
Pomfret Town
Portland Town
Sheridan Town
Stockton Town
East Central Essex
County—Essex
Parts:
Elizabethtown Town
Essex Town
Keene Town
Lewis Town
Moriah Town
North Hudson Town
Westport Town
Willsboro Town
East Ny-Brooklyn
County—Kings
Parts:
C.T. 904
C.T. 906
C.T. 908
C.T. 910
C.T. 912
C.T. 914
C.T. 916
C.T. 918
C.T. 920
C.T. 922
C.T. 982
C.T. 1058
C.T. 1070
C.T. 1078
C.T. 1098
C.T. 1100
C.T. 1102
C.T. 1106
C.T. 1110
C.T. 1112
C.T. 1114
C.T. 1118
C.T. 1120
C.T. 1122
C.T. 1124
C.T. 1126
C.T. 1128
C.T. 1130
C.T. 1132
C.T. 1134
C.T. 1136
C.T. 1138
C.T. 1140
C.T. 1146
C.T. 1148
C.T. 1150
C.T. 1152
C.T. 1154
C.T. 1156
C.T. 1158
C.T. 1160
C.T. 1162
C.T. 1164
C.T. 1166
C.T. 1168
C.T. 1170
C.T. 1172.01–1172.02
C.T. 1174
C.T. 1176.01–1176.02
C.T. 1178

PRIMARY MEDICAL CARE: New York
Service Area Listing

Service Area Name

C.T. 1180
C.T. 1182.01–1182.02
C.T. 1184
C.T. 1186
C.T. 1188
C.T. 1190.97
C.T. 1192
C.T. 1194
C.T. 1196
C.T. 1200
C.T. 1202.97–1202.98
C.T. 1208
C.T. 1210
C.T. 1214
C.T. 1220
Elkland (NY/PA)
County—Steuben
Parts:
Tuscarora Town
Woodhull Town
Ellicott/Lower Westside
County—Erie
Parts:
C.T. 12
C.T. 13.01–13.02
C.T. 14.01–14.02
C.T. 15–18
C.T. 25.01–25.02
C.T. 26
C.T. 27.01
C.T. 31
C.T. 68
C.T. 71.01–71.02
C.T. 72.01
Gouverneur
County—Jefferson
Parts:
Antwerp Town
County—St Lawrence
Parts:
De Kalb Town
De Peyster Town
Edwards Town
Fowler Town
Gouverneur Town
Macomb Town
Rossie Town
Hunts Point
County—Bronx
Parts:
C.T. 5
C.T. 91
C.T. 97
C.T. 99
C.T. 105
C.T. 115.01–115.02
Jordan
County—Monroe
Parts:
C.T. 7
C.T. 13–15
C.T. 39
C.T. 43
C.T. 48–53
C.T. 55–56
C.T. 80
C.T. 91–92
C.T. 93.01
Letchworth
County—Allegany
Parts:
Allen Town

PRIMARY MEDICAL CARE: New York
Service Area Listing

Service Area Name

Caneadea Town
Granger Town
Hume Town
County—Livingston
Parts:
Portage Town
County—Wyoming
Parts:
Castile Town
Gainesville Town
Genesee Falls Town
Pike Town
Long Island City
County—Queens
Parts:
C.T. 1
C.T. 7
C.T. 19
C.T. 25
C.T. 27
C.T. 29
C.T. 31
C.T. 35
C.T. 37
C.T. 39
C.T. 41
C.T. 43
C.T. 45
C.T. 47
C.T. 49
C.T. 51
C.T. 53
C.T. 55
C.T. 57
C.T. 59
C.T. 171
Margaretville/Andes
County—Delaware
Parts:
Andes Town
Middletown Town
Roxbury Town
Morris Heights
County—Bronx
Parts:
C.T. 53.02
C.T. 205
C.T. 215.01–215.02
C.T. 217.01
C.T. 227.01
C.T. 233.01
C.T. 235.01
C.T. 237.01
C.T. 239
C.T. 241
C.T. 243
C.T. 245
C.T. 247
C.T. 249
C.T. 251
C.T. 253
C.T. 255
C.T. 257
Newfane
County—Niagara
Parts:
Hartland Town
Newfane Town
Somerset Town
Wilson Town
Niagara Falls
County—Niagara
Parts:
Niagara Falls City
Oak Orchard
County—Orleans
Parts:
Albion Town
Barre Town
Carlton Town
Clarendon Town
Gaines Town
Kendall Town
Murray Town
P.S. 84
County—Erie
Parts:
C.T. 27.02
C.T. 29
C.T. 32.01–32.02
C.T. 33.01–33.02
C.T. 34–36
C.T. 39.01–39.02
C.T. 40.01–40.02
C.T. 41–42
C.T. 44.02
C.T. 52.02
C.T. 64
Pulaski
County—Oswego
Parts:
Albion Town
Boylston Town
Mexico Town
Orwell Town
Redfield Town
Richland Town
Sandy Creek Town
Williamstown Town
Randolph/Ellicottville
County—Cattaraugus
Parts:
Carrollton Town
Coldspring Town
Conewango Town
Ellicottville Town
Franklinville Town
Great Valley Town
Humphrey Town
Little Valley Town
Mansfield Town
Napoli Town
New Albion Town
Randolph Town
Red House Town
Salamanca City
Salamanca Town
South Valley Town
South Seneca
County—Seneca
Parts:
Covert Town
Lodi Town
Ovid Town
Star Lake
County—St Lawrence
Parts:
Clare Town
Clifton Town
Fine Town
Pitcairn Town
Russell Town
Tri-County
County—Cattaraugus
Parts:
Dayton Town
Leon Town
Otto Town
Perrysburg Town
Persia Town
County—Chautauqua
Parts:
Cherry Creek Town
Hanover Town
Villenova Town
County—Erie
Parts:
Brant Town
Collins Town
Eden Town
Evans Town
North Collins Town
Union City/Corry
County—Chautauqua
Parts:
Clymer Town
French Creek Town
Warrensburg
County—Essex
Parts:
Minerva Town
County—Warren
Parts:
Chester Town
Horicon Town
Johnsburg Town
Thurman Town
Warrensburg Town
Washington Heights—Inwood
County—New York
Parts:
C.T. 243.01
C.T. 245
C.T. 247
C.T. 249
C.T. 251
C.T. 253
C.T. 255
C.T. 261
C.T. 263
C.T. 265
C.T. 267
C.T. 269
C.T. 271
C.T. 273
C.T. 275
C.T. 277
C.T. 279
C.T. 281
C.T. 283
C.T. 285
C.T. 287
C.T. 289
C.T. 291
C.T. 293
C.T. 295
C.T. 297
C.T. 303
C.T. 307
C.T. 309
C.T. 311
Webb
County—Hamilton
Parts:
Inlet Town
County—Herkimer

PRIMARY MEDICAL CARE: New York
Service Area Listing

Service Area Name

Parts:
Webb Town
Wellsville
County—Allegany
Parts:
Alfred Town
Alma Town
Almond Town
Amity Town
Andover Town
Angelica Town
Belfast Town
Birdsall Town
Bolivar Town
Burns Town
Clarksville Town
Cuba Town
Friendship Town
Genesee Town
Grove Town
Independence Town
New Hudson Town
Scio Town
Ward Town
Wellsville Town
West Almond Town
Willing Town
Wirt Town
West Central Harlem
County—New York
Parts:
C.T. 186
C.T. 190
C.T. 197.02
C.T. 200
C.T. 201.02
C.T. 207.02
C.T. 208
C.T. 209.01–209.02
C.T. 211–212
C.T. 213.01–213.02
C.T. 214
C.T. 216
C.T. 217.01–217.02
C.T. 218
C.T. 219.97
C.T. 220
C.T. 221.01–221.02
C.T. 222
C.T. 223.97–223.98
C.T. 224–226
C.T. 227.01–227.02
C.T. 228–230
C.T. 231.01–231.02
C.T. 232–234
C.T. 235.01–235.02
C.T. 236–237
C.T. 239
C.T. 241
C.T. 243.02
Westerlo-Rensselaerville
County—Albany
Parts:
Rensselaerville Town
Westerlo Town
Westfield
County—Chautauqua
Parts:
Chautauqua Town
Mina Town
Ripley Town
Sherman Town

PRIMARY MEDICAL CARE: New York
Service Area Listing

Service Area Name

Westfield Town
Westside (Rochester)
County—Monroe
Parts:
C.T. 2
C.T. 16–17
C.T. 23–24
C.T. 27
C.T. 32
C.T. 40–41
C.T. 62–71
C.T. 75
C.T. 87.01–87.02
C.T. 88–90
C.T. 93.02
C.T. 94.01–94.03
C.T. 95
C.T. 96.01–96.04
Williamsburg
County—Kings
Parts:
C.T. 507
C.T. 509
C.T. 515
C.T. 519
C.T. 523
C.T. 525
C.T. 529
C.T. 531
C.T. 533
C.T. 535
C.T. 537
C.T. 539
C.T. 545
C.T. 547
C.T. 549
C.T. 551
C.T. 553
C.T. 555

PRIMARY MEDICAL CARE: New York
Population Group Listing

Population Group

Homeless—Chelsea/Ward's Island
County—New York
Parts:
C.T. 91 (Homeless)
C.T. 93 (Homeless)
C.T. 95 (Homeless)
C.T. 97 (Homeless)
C.T. 99 (Homeless)
C.T. 101 (Homeless)
C.T. 103 (Homeless)
C.T. 109 (Homeless)
C.T. 111 (Homeless)
C.T. 113 (Homeless)
C.T. 115 (Homeless)
C.T. 117 (Homeless)
C.T. 240 (Homeless)
Low Inc —Utica
County—Oneida
Parts:
C.T. 202.01–202.02
C.T. 203–206
C.T. 207.01–207.02
C.T. 208.01–208.03
C.T. 209–210
C.T. 211.01–211.03
C.T. 212.01–212.02
C.T. 213.01–213.03
C.T. 214.01–214.04

PRIMARY MEDICAL CARE: New York
Population Group Listing

Population Group

C.T. 215
C.T. 216.01–216.02
C.T. 217.01–217.02
Low Inc—Beacon
County—Dutchess
Parts:
C.T. 2101–2103
Low Inc—Canton/Potsdam
County—Franklin
Parts:
Dickinson Town
Waverly Town
County—St Lawrence
Parts:
Canton Town
Colton Town
Hermon Town
Hopkinton Town
Madrid Town
Parishville Town
Pierrepont Town
Potsdam Town
Stockholm Town
Low Inc—Cortland
County—Cortland
Parts:
Low Income
Low Inc—East Harlem
County—New York
Parts:
C.T. 156.01–156.02
C.T. 158.02
C.T. 160.02
C.T. 162
C.T. 164
C.T. 166
C.T. 168
C.T. 170
C.T. 172.01–172.02
C.T. 174.01–174.02
C.T. 178
C.T. 180
C.T. 182
C.T. 184
C.T. 188
C.T. 192
C.T. 194
C.T. 196
C.T. 198
C.T. 202
C.T. 204
C.T. 206
C.T. 210
Low Inc—Fulton
County—Oswego
Parts:
Fulton City
Granby Town
Schroeppel Town
Volney Town
Low Inc—Groton/Moravia
County—Cayuga
Parts:
Locke Twn
Moravia Twn
Semproniustwn
Summerhilltwn
County—Tompkins
Parts:
Groton Twn
Low Inc—High Bridge
County—Bronx

PRIMARY MEDICAL CARE: New York
Population Group Listing

Population Group

Parts:
C.T. 53.01
C.T. 57
C.T. 59.01
C.T. 187
C.T. 189
C.T. 193
C.T. 195
C.T. 197
C.T. 199
C.T. 201
C.T. 211
C.T. 213.01–213.02
C.T. 217.02
C.T. 219
C.T. 221
C.T. 223
C.T. 227.02
Low Inc—Hobart/Stamford
County—Delaware
Parts:
Davenport Town
Harpersfield Town
Kortright Town
Stamford Town
County—Schoharie
Parts:
Jefferson Town
Low Inc—Malone
County—Clinton
Parts:
Altona Town
Clinton Town
Ellenburgtown
County—Franklin
Parts:
Bangor Town
Bellmont Town
Bombaytown
Brandon Town
Burke Town
Chateaugay Town
Constable Town
Duane Own
Fort Covington Own
Malone Town
Moira Town
Westville Town
Low Inc—Middletown
County—Orange
Parts:
Middletown Township
Low Inc—Monsey/New Square
County—Rockland
Parts:
C.T. 115.03–115.04
C.T. 121–124
Low Inc—Morrisania
County—Bronx
Parts:
C.T. 49
C.T. 59.02
C.T. 61
C.T. 121.01
C.T. 123
C.T. 125
C.T. 127.01
C.T. 129.01
C.T. 131
C.T. 133
C.T. 135
C.T. 137

PRIMARY MEDICAL CARE: New York
Population Group Listing

Population Group

C.T. 139
C.T. 141
C.T. 143
C.T. 145
C.T. 147
C.T. 149
C.T. 151
C.T. 153
C.T. 155
C.T. 157
C.T. 161
C.T. 163
C.T. 165
C.T. 167
C.T. 169
C.T. 171
C.T. 173
C.T. 175
C.T. 177
C.T. 179
C.T. 181
C.T. 183
C.T. 225
C.T. 227.03
C.T. 229.02
C.T. 367
C.T. 369.02
Low Inc—Mott Haven
County—Bronx
Parts:
C.T. 11
C.T. 15
C.T. 17
C.T. 23
C.T. 25
C.T. 27.01–27.02
C.T. 31
C.T. 33
C.T. 35
C.T. 37
C.T. 39
C.T. 41
C.T. 43
C.T. 47
C.T. 65
C.T. 67
C.T. 69
C.T. 71
C.T. 73
C.T. 75
C.T. 77
C.T. 79
C.T. 81
C.T. 83
C.T. 85
C.T. 87
C.T. 89
C.T. 119
C.T. 121.02
C.T. 127.02
C.T. 129.02
Low Inc—Newburgh City
County—Orange
Parts:
C.T. 1–6
Low Inc—Ogdensburg
County—St Lawrence
Parts:
Depeyster Town
Lisbon Town
Morristown Town
Ogdensburg City

PRIMARY MEDICAL CARE: New York
Population Group Listing

Population Group

Oswegatchie Town
Waddington Town
Low Inc—Oswego City
County—Cayuga
Parts:
Sterling Town
County—Oswego
Parts:
Hannibal Town
Minetto Town
New Haven Town
Oswego City
Oswego Town
Scriba Town
Low Inc—Schroon-Ticonderoga
County—Essex
Parts:
Crown Point Twp
Schroon Twp
Ticonderoga Twp
County—Warren
Parts:
Hague Twp
County—Washington
Parts:
Dresden Twp
Putnam
Low Inc—Soundview
County—Bronx
Parts:
C.T. 2
C.T. 4
C.T. 16
C.T. 20
C.T. 24
C.T. 28
C.T. 36
C.T. 38
C.T. 40.01–40.02
C.T. 44
C.T. 46
C.T. 48
C.T. 50
C.T. 52
C.T. 54
C.T. 56
C.T. 58
C.T. 62
C.T. 64
C.T. 66
C.T. 68
C.T. 70
C.T. 72
C.T. 74
C.T. 78
C.T. 84
C.T. 86
C.T. 88
C.T. 98
C.T. 102
C.T. 114
Low Inc—Syracuse
County—Onondaga
Parts:
C.T. 5–7
C.T. 13–16
C.T. 21–24
C.T. 29–35
C.T. 36.01
C.T. 38–45
C.T. 51–55
C.T. 57–59

PRIMARY MEDICAL CARE: New York
Population Group Listing

Population Group

C.T. 61.01–61.02
Low Inc—Watertown
County—Jefferson
Parts:
Brownville Town
City Of Watertown
Hounsfield Town
Le Ray Town
Pamelia Town
Rutland Town
Watertown Town
Low Inc—West Farms
County—Bronx
Parts:
C.T. 60
C.T. 216.01–216.02
C.T. 218
C.T. 220
C.T. 236
C.T. 240
C.T. 359
C.T. 361
C.T. 363
Low Income—Rome PCSa
County—Oneida
Parts:
Floyd
Lee
Rome
Verona
Western
Medicaid—Rockaway
County—Queens
Parts:
C.T. 916.01–916.02
C.T. 916.99
C.T. 918
C.T. 922
C.T. 928
C.T. 934
C.T. 938
C.T. 942.01–942.03
C.T. 952
C.T. 962
C.T. 964
C.T. 972
C.T. 992
C.T. 998
C.T. 1008
C.T. 1010
C.T. 1032
MFW—Goshen/Warwick
County—Orange
Parts:
Goshen Town
Warwick Town
MFW—New Paltz
County—Ulster
Parts:
New Paltz Town
MFW—Walden
County—Orange
Parts:
Montgomery Town

PRIMARY MEDICAL CARE: New York
Facility Listing

Facility Name

Attica Corr Fac
County—Wyoming
Bare Hill Corr Fac
County—Franklin
Chateaugay State Corr. Facility
County—Franklin
FCI Raybrook
County—Franklin
Hale Creek ASATCA
County—Fulton
Highland Residential Center
County—Ulster
INS Med Facility Queens
County—Queens
INS Med Facility-Batavia
County—Erie
INS Medical Facility—New York
County—New York
Jacobi Women's Health Center
County—Bronx
NYC Corr. Fac./Rikers Island
County—Bronx

PRIMARY MEDICAL CARE: North Carolina
County Listing

County Name

Alamance
Population Group: Low Inc—Alamance Co
Alexander
*Anson
*Beaufort
Service Area: Bayboro/Aurora
Service Area: Belhaven/Swan Quarter
*Bertie
Brunswick
Population Group: Low Inc—Brunswick Co.
Caldwell
Service Area: Western Caldwell
*Caswell
Chatham
Population Group: Low Inc—Moncure/Sanford
*Cherokee
Service Area: Andrews
*Clay
*Cleveland
Population Group: Low Inc—Cleveland Co
*Columbus
Cumberland
Population Group: Low Inc—Cumberland Co
Currituck
*Dare
Service Area: Hatteras-Ocracoke
*Duplin
Population Group: Low Inc—Duplin Co
Edgecombe
Franklin
Gaston
Population Group: Low Inc—Gaston Co
*Gates
*Graham
*Greene
Guilford
Service Area: Inner City Greensboro
*Halifax
Population Group: Low Inc—Halifax
*Harnett
Population Group: Low Inc—Harnett
*Henderson
Population Group: MFW—Henderson/Polk
*Hertford
Population Group: Low Inc—Hertford Co
*Hoke
*Hyde
Service Area: Belhaven/Swan Quarter
Service Area: Hatteras-Ocracoke
Johnston
Population Group: Low Inc/MFW—Johnston Co
*Lee
Population Group: Low Inc—Moncure/Sanford
*Lenoir
Service Area: East Kinston
Mecklenburg
Service Area: Central Charlotte
Facility: C.W. Williams Med Ofc
Nash
Population Group: Low Inc/MFW—Nash Co
New Hanover
Population Group: Low Inc—New Hanover Co
*Northampton
*Pamlico
Service Area: Bayboro/Aurora
*Pender
*Person
*Polk
Population Group: MFW—Henderson/Polk
Randolph
*Robeson
*Sampson
Population Group: Low Inc/MFW—Sampson Co
*Scotland
Population Group: Low Inc—Scotland Co
*Stanly
Population Group: Low Inc—Stanly Co
Stokes
Service Area: Danbury
*Surry
Population Group: Low Inc—Surry Co
*Swain
Population Group: Low Inc—Swain Co
*Tyrrell
*Vance
Facility: FCI—Butner
Wake
Facility: Central Prison
*Warren
*Washington
Wayne
Population Group: Low Inc—Wayne Co
*Wilson
Population Group: Low Inc/MFW—Wilson Co
*Yancey
Population Group: Low Inc—Yancey Co

PRIMARY MEDICAL CARE: North Carolina
Service Area Listing

Service Area Name

Andrews
County—Cherokee
Parts:
Valley Town Township
Bayboro/Aurora
County—Beaufort
Parts:
Richland Township
County—Pamlico
Belhaven/Swan Quarter
County—Beaufort

PRIMARY MEDICAL CARE: North Carolina
Service Area Listing

Service Area Name

Parts:
Bath Township
Pantego Township
County—Hyde
Parts:
Currituck Township
Fairfield Township
Lake Landing Township
Lake Mattamuskeet Unorg.
Swan Quarter Township
Central Charlotte
County—Mecklenburg
Parts:
C.T. 1
C.T. 4–8
C.T. 36–37
C.T. 38.98
C.T. 39.01–39.02
C.T. 41–42
C.T. 45.00–51.01
C.T. 52
Danbury
County—Stokes
Parts:
C.T. 701–703
East Kinston
County—Lenoir
Parts:
C.T. 101–105
C.T. 107
Hatteras-Ocracoke
County—Dare
Parts:
Hatteras Township
Kinnakeet Township
County—Hyde
Parts:
Ocracoke Township
Inner City Greensboro
County—Guilford
Parts:
C.T. 101
C.T. 107.02
C.T. 108.01
C.T. 110
C.T. 111.01
C.T. 112–115
Western Caldwell
County—Caldwell
Parts:
Globe Township
Johns River Township
Mulberry Township
Patterson Township
Wilson Creek Township

PRIMARY MEDICAL CARE: North Carolina
Population Group Listing

Population Group

Low Inc—Alamance Co
County—Alamance
Parts:
Low Income
Low Inc—Brunswick Co.
County—Brunswick
Parts:
Low Income
Low Inc—Cleveland Co
County—Cleveland
Parts:
Low Income

PRIMARY MEDICAL CARE: North Carolina
Population Group Listing

Population Group

Low Inc—Cumberland Co
County—Cumberland
Parts:
Low Income
Low Inc—Duplin Co
County—Duplin
Parts:
Low Income
Low Inc—Gaston Co
County—Gaston
Parts:
Low Income
Low Inc—Halifax
County—Halifax
Parts:
Low Income
Low Inc—Harnett
County—Harnett
Parts:
Low Income
Low Inc—Hertford Co
County—Hertford
Parts:
Low Income
Low Inc—Moncure/Sanford
County—Chatham
Parts:
Cape Fear
Haw River
Oakland
County—Lee
Parts:
Cape Fear
Deep River
East Sanford
Jonesboro
West Sanford
Low Inc—New Hanover Co
County—New Hanover
Parts:
Low Income
Low Inc—Scotland Co
County—Scotland
Parts:
Low Income
Low Inc—Stanly Co
County—Stanly
Parts:
Low Income
Low Inc—Surry Co
County—Surry
Parts:
Low Income
Low Inc—Swain Co
County—Swain
Parts:
Low Income
Low Inc—Wayne Co
County—Wayne
Parts:
Low Income
Low Inc—Yancey Co
County—Yancey
Parts:
Low Income
Low Inc/MFW—Johnston Co
County—Johnston
Parts:
Low Income/MFW
Low Inc/MFW—Nash Co
County—Nash
Parts:

PRIMARY MEDICAL CARE: North Carolina
Population Group Listing

Population Group

Low Income/MFW
Low Inc/MFW—Sampson Co
County—Sampson
Parts:
Low Income/MFW
Low Inc/MFW—Wilson Co
County—Wilson
Parts:
Low Income/MFW
MFW—Henderson/Polk
County—Henderson
Parts:
MFW
County—Polk
Parts:
MFW

PRIMARY MEDICAL CARE: North Carolina
Facility Listing

Facility Name

C.W. Williams Med Ofc
County—Mecklenburg
Central Prison
County—Wake
FCI—Butner
County—Vance

PRIMARY MEDICAL CARE: North Dakota
County Listing

County Name

*Adams
Service Area: Lemmon (SD/ND)
*Barnes
Service Area: Wimbledon
*Benson
*Bottineau
Service Area: Bottineau
Service Area: Mohall
*Burke
*Cavalier
*Dickey
Service Area: Dickey/Brown (ND/SD)
*Divide
*Dunn
*Eddy
*Emmons
*Golden Valley
*Hettinger
*Kidder
Service Area: Medina
*La Moure
Service Area: La Moure
*Logan
*McHenry
*McIntosh
Population Group: Low Inc—McIntosh
*McKenzie
*McLean
*Mercer
Morton
Service Area: West Morton/East Stark
*Mountrail
Service Area: New Town
Service Area: Stanley
*Nelson
*Oliver
*Pembina
Population Group: Low Inc—Pembina
*Renville
Service Area: Mohall

PRIMARY MEDICAL CARE: North Dakota
County Listing

County Name

*Richland
Service Area: Hankinson/Lidgerwood (ND/SD)
*Rolette
*Sargent
*Sheridan
*Sioux
*Slope
*Stark
Service Area: West Morton/East Stark
*Stutsman
Service Area: Medina
Service Area: Wimbledon
*Ward
Service Area: New Town
Service Area: Stanley
*Wells
*Williams
Service Area: Tioga

PRIMARY MEDICAL CARE: North Dakota
Service Area Listing

Service Area Name

Bottineau
County—Bottineau
Parts:
Amity Township
Bentinck Township
Bottineau City
Brander Township
Cecil Township
Chatfield Township
Cordelia Township
Dalen Township
Eidsvold Township
Elms Township
Elysian Township
Gardena City
Haram Township
Hastings Township
Homen Township
Kane Township
Kramer City
Landa City
Lewis Township
Lordsburg Township
Maxbass City
Mount Rose Township
Newborg Township
Newburg City
Oak Creek Township
Oak Valley Township
Ostby Township
Overly City
Peabody Township
Pickering Township
Richburg Township
Roland Township
Russell City
Scandia Township
Scotia Township
Sergius Township
Souris City
Starbuck Township
Stone Creek Township
Tacoma Township
Wayne Township
Wellington Township
Westhope City
Whitby Township
Whitteron Township

PRIMARY MEDICAL CARE: North Dakota
Service Area Listing

Service Area Name

Willow City City
Willow Vale Township
Dickey/Brown (ND/SD)
County—Dickey
Hankinson/Lidgerwood (ND/SD)
County—Richland
Parts:
Barney City
Belford Township
Brandenburg Township
Brightwood Township
Danton Township
Devillo Township
Dexter Township
Duerr Township
Elma Township
Fairmount City
Fairmount Township
Grant Township
Great Bend City
Greendale Township
Hankinson City
La Mars Township
Liberty Grove Township
Lidgerwood City
Mantador City
Moran Township
Waldo Township
Wyndmere Township
Wyndmere City
La Moure
County—La Moure
Parts:
Adrian Township
Badger Township
Berlin City
Black Loam Township
Bluebird Township
Dean Township
Dickey City
Gladstone Township
Glen Township
Glenmore Township
Grand Rapids Township
Grandview Township
Greenville Township
Henrietta Township
Jud City
Kennison Township
La Moure City
Litchville Township
Marion City
Mikkelson Township
Ovid Township
Pearl Lake Township
Prairie Township
Raney Township
Roscoe Township
Russell Township
Ryan Township
Saratoga Township
Sheridan Township
Verona City
Lemmon (SD/ND)
County—Adams
Parts:
East Adams Unorg.
Gilstrap Township
North Lemmon Township
Orange Township
South Fork Township
Medina

PRIMARY MEDICAL CARE: North Dakota
Service Area Listing

Service Area Name

County—Kidder
Parts:
Allen Township
Buckeye Township
Bunker Township
Crystal Springs Township
Dawson City
Graf Township
Haynes Township
Manning Township
Peace Township
Quinby Township
Sibley Township
South Kidder Unorg.
Steele City
Tanner Township
Tappen City
Tappen Township
Valley Township
Vernon Township
Weiser Township
Westford Township
Williams Township
Woodlawn Township
County—Stutsman
Parts:
Bloomenfield Township
Chase Lake Unorg.
Chicago Township
Cleveland City
Flint Township
Germania Township
Griffin Township
Iosco Township
Medina City
Newbury Township
Peterson Township
Sinclair Township
St. Paul Township
Stirton Township
Streeter City
Streeter Township
Valley Spring Township
Weld Township
Mohall
County—Bottineau
Parts:
Antler City
Antler Township
Blaine Township
Cut Bank Township
Hoffman Township
Lansford Township
Lansford City
Renville Township
Sherman Township
Wheaton Township
County—Renville
Parts:
Brandon Township
Callahan Township
Clay Township
Colquhoun Township
Eden Valley Township
Grano City
Grassland Township
Hamerly Township
Hamlet Township
Hurley Township
Lockwood Township
Loraine City
Mohall City

PRIMARY MEDICAL CARE: North Dakota
Service Area Listing

Service Area Name

Sherwood City
New Town
Parts:
Banner Township
Big Bend Township
Brookbank Township
Crane Creek Township
Fertile Township
Howie Township
Knife River Township
Liberty Township
Model Township
Mountrail Township
New Town City
Oakland Township
Osborn Township
Osloe Township
Parshall City
Parshall Township
Plaza Township
Plaza City
Rat Lake Township
Shell Township
Sikes Township
Southwest Mountrail Unorg.
Spring Coulee Township
Van Hook Township
Wayzetta Township
County—Ward
Parts:
Anna Township
Hiddenwood Township
Linton Township
Lund Township
Makoti City
Orlien Township
Ryder Township
Ryder City
Shealey Township
Tolgen Township
Stanley
Parts:
Alger Township
Bicker Township
Burke Township
Clearwater Township
Cottonwood Township
Crowfoot Township
Debing Township
Egan Township
Idaho Township
James Hill Township
Kickapoo Township
Lostwood Township
Lowland Township
Manitou Township
McAlmond Township
McGahan Township
Myrtle Township
Palermo City
Palermo Township
Powers Township
Powers Lake Township
Purcell Township
Redmond Township
Ross City
Ross Township
Sidonia Township
Sorkness Township
Stanley City
Stave Township
West Mountrail Unorg.

PRIMARY MEDICAL CARE: North Dakota
Service Area Listing

Service Area Name

White Earth City
White Earth Township
County—Ward
Parts:
Berthold City
Berthold Township
Carbondale Township
Carpio City
Carpio Township
Donnybrook City
Evergreen Township
Mandan Township
Passport Township
Ree Township
Tioga
County—Williams
Parts:
Alamo City
Athens Township
Barr Butte Township
Big Meadow Township
Big Stone Township
Blacktail Township
Blue Ridge Township
Bonetraill Township
Brooklyn Township
Champion Township
Climax Township
Dry Fork Township
Dublin Township
Ellisville Township
Epping City
Farmvale Township
Golden Valley Township
Good Luck Township
Grenora City
Grenora Township
Hanks City
Hazel Township
Hofflund Township
Lindahl Township
Marshall Township
Nesson Valley Unorg.
New Home Township
Oliver Township
Orthell Township
Pleasant Valley Township
Rainbow Township
Ray City
Rock Island Township
Sauk Valley Township
Scorio Township
South Meadow Township
Southeast Williams Unorg.
Spring Brook City
Strandahl Township
Tioga Township
Tioga City
Truax Township
Twelve Mile Township
View Township
West Bank Township
Wheelock Township
Wheelock City
Wildrose City
Winner Township
West Morton/East Stark
County—Morton
Parts:
Almont City
Engelter Township
Glen Ullin City

PRIMARY MEDICAL CARE: North Dakota
Service Area Listing

Service Area Name

Hebron City
New Salem City
West Morton Unorg.
County—Stark
Parts:
East Stark Unorg.
Richardton City
Taylor City
Wimbledon
County—Barnes
Parts:
Ashtabula Township
Baldwin Township
Dazey City
Dazey Township
Edna Township
Ellsbury Township
Grand Prairie Township
Lake Town Township
Leal City
Minnie Lake Township
Pierce Township
Pillsbury City
Rogers City
Rogers Township
Sibley City
Sibley Trail Township
Uxbridge Township
Wimbledon City
County—Stutsman
Parts:
Ashland Township
Courtenay City
Courtenay Township
Durham Township
Gray Township
Spiritwood Lake City

PRIMARY MEDICAL CARE: North Dakota
Population Group Listing

Population Group

Low Inc—McIntosh
County—McIntosh
Parts:
Low Income
Low Inc—Pembina
County—Pembina
Parts:
Low Income

PRIMARY MEDICAL CARE: Ohio
County Listing

County Name

*Adams
Population Group: Low Inc—Adams Co
*Ashtabula
Service Area: Orwell
*Athens
Population Group: Low Inc—Athens
Butler
Service Area: Eastern Hamilton
Service Area: West Middletown
Facility: Maternal And Child Health Center
Carroll
Clark
Service Area: Southwest Side (Springfield)
Clermont
Service Area: Eastern Clermont
Columbiana
Population Group: Low Inc—East Liverpool

PRIMARY MEDICAL CARE: Ohio
County Listing

Service Area Name

*Coshocton
Population Group: Low Inc—Coshocton Co
Cuyahoga
Service Area: East Cleveland
Service Area: Hough/Norwood/Glenville
Service Area: Mt Pleasant/Union-Miles/Corlett
Service Area: Western Collinwood
Population Group: Low Inc—Lee Miles (Cleveland)
Population Group: Low Inc—Central/Fairfax/Kinsman
Population Group: Low Income—Near West/Westside/Edgewate
Facility: Free Clinic Of Greater Cleveland
Facility: Neighborhood Family Practice
*Fayette
Population Group: Low Inc—Fayette Co
Franklin
Service Area: Lower Linden (N.E. Columbus)
Service Area: Near North/University
Population Group: Low Inc—Near Southside (Columbus)
Population Group: Low Inc—Franklinton (Columbus)
*Guernsey
Service Area: Freeport
Hamilton
Service Area: East & Lower Price Hill/S Fairmont
Service Area: East End (Cincinnati)
Service Area: Millvale
Service Area: West End (Cincinnati)
*Hancock
Population Group: Low Inc—Tiffin/Fostoria
*Hardin
Population Group: Low Inc—Hardin Co
*Harrison
Service Area: Cadiz/Scio/Hopedale
Service Area: Freeport
*Highland
Population Group: Low Inc—Highland Co
*Hocking
Population Group: Low Inc—Hocking Co
*Holmes
Population Group: Low Inc—Holmes Co
*Jackson
Population Group: Low Inc—Jackson Co
Jefferson
Population Group: Low Inc—East Liverpool
Lawrence
Lucas
Service Area: East Toledo
Service Area: Near Southside Toledo
Population Group: Low Inc—Center City/Dorr (Toledo)
Mahoning
Service Area: Eastside Youngstown
Service Area: Southside Youngstown
*Meigs
Population Group: Low Inc—Meigs Co
*Monroe
Service Area: New Matamoras
Service Area: Woodsfield
Montgomery
Service Area: West Dayton
Population Group: Homeless—Dayton
*Morgan
*Morrow
Population Group: Low Inc—Morrow Co
*Noble

PRIMARY MEDICAL CARE: Ohio
County Listing

Service Area Name

Facility: Noble Corr Fac
*Paulding
*Perry
Pickaway
Population Group: Low Inc—Pickaway Co
*Pike
Population Group: Low Inc—Pike Co
*Preble
Richland
Population Group: Low Inc—Richland
*Sandusky
Population Group: Low Inc/MFW—Sandusky Co
*Scioto
Population Group: Low Inc—Scioto Co
*Seneca
Population Group: Low Inc—Tiffin/Fostoria
Stark
Service Area: NE Canton
Summit
Service Area: Akron (Southeast Side)
Trumbull
Service Area: Orwell
Service Area: The Flats (Warren)
*Tuscarawas
Service Area: Freeport
Population Group: Low Inc—S Tuscarawas Co
*Vinton
Washington
Service Area: New Matamoras
Wood
Population Group: Low Inc—Tiffin/Fostoria

PRIMARY MEDICAL CARE: Ohio
Service Area Listing

Service Area Name

Akron (Southeast Side)
County—Summit
Parts:
C.T. 5014
C.T. 5031–5035
C.T. 5038
Cadiz/Scio/Hopedale
County—Harrison
Parts:
Archer Township
Athens Township
Cadiz Township
Franklin Township
German Township
Green Township
Monroe Township
North Township
Rumley Township
Short Creek Township
Stock Township
East & Lower Price Hill/S Fairmont
County—Hamilton
Parts:
C.T. 87
C.T. 89
C.T. 91–96
C.T. 103
East Cleveland
County—Cuyahoga
Parts:
C.T. 1501
C.T. 1503–1504
C.T. 1511–1518
East End (Cincinnati)

PRIMARY MEDICAL CARE: Ohio
Service Area Listing

Service Area Name

County—Hamilton
Parts:
C.T. 43–44
C.T. 47.02
East Toledo
County—Lucas
Parts:
C.T. 46
C.T. 47.01–47.02
C.T. 48
C.T. 48.99–49.00
C.T. 50–53
Eastern Clermont
County—Clermont
Parts:
Batavia Township
Franklin Township
Goshen Township
Jackson Township
Monroe Township
Ohio Township
Pierce Township
Stonelick Township
Tate Township
Washington Township
Wayne Township
Williamsburg Township
Eastern Hamilton
County—Butler
Parts:
C.T. 3–4
C.T. 6
C.T. 7.01–7.02
Eastside Youngstown
County—Mahoning
Parts:
C.T. 8001–8007
C.T. 8040
Freeport
County—Guernsey
Parts:
Londonderry Township
Madison Township
Washington Township
County—Harrison
Parts:
Freeport Township
Moorefield Township
Nottingham Township
Washington Township
County—Tuscarawas
Parts:
Perry Township
Hough/Norwood/Glenville
County—Cuyahoga
Parts:
C.T. 1112–1113
C.T. 1114.01–1114.02
C.T. 1115–1118
C.T. 1119.01–1119.02
C.T. 1121–1128
C.T. 1161–1168
C.T. 1181–1185
C.T. 1186.01–1186.02
C.T. 1189
Lower Linden (N.E. Columbus)
County—Franklin
Parts:
C.T. 7.20
C.T. 7.30
C.T. 9.10
C.T. 9.20

PRIMARY MEDICAL CARE: Ohio
Service Area Listing

Service Area Name

C.T. 14–15
C.T. 23
C.T. 25.10
C.T. 29
C.T. 75.11–75.12
C.T. 75.20
C.T. 75.34
C.T. 76
Millvale
County—Hamilton
Parts:
C.T. 28
C.T. 77
C.T. 85.02
C.T. 86.01
Mt Pleasant/Union-Miles/Corlett
County—Cuyahoga
Parts:
C.T. 1155
C.T. 1198–1199
C.T. 1204–1206
C.T. 1207.01–1207.02
C.T. 1208.01–1208.02
C.T. 1211–1213
C.T. 1214.01–1214.02
C.T. 1215–1216
C.T. 1275
Near North/University
County—Franklin
Parts:
C.T. 6
C.T. 10
C.T. 11.10
C.T. 12–13
C.T. 16–17
C.T. 18.10
C.T. 18.20
C.T. 20–22
C.T. 32
Near Southside Toledo
County—Lucas
Parts:
C.T. 38
C.T. 40–42
C.T. 54
New Matamoras
County—Monroe
Parts:
Benton Township
Jackson Township
County—Washington
Parts:
Grandview Township
Independence Township
Liberty Township
Ludlow Township
NE Canton
County—Stark
Parts:
C.T. 7002–7005
C.T. 7018
Orwell
County—Ashtabula
Parts:
Colebrook Township
Hartsgrove Township
Morgan Township
New Lyme Township
Orwell Township
Rome Township
Trumbull Township
Windsor Township

PRIMARY MEDICAL CARE: Ohio
Service Area Listing

Service Area Name

County—Trumbull
Parts:
Bloomfield Township
Greene Township
Gustavus Township
Kinsman Township
Mesopotamia Township
Southside Youngstown
County—Mahoning
Parts:
C.T. 8010
C.T. 8016–8017
C.T. 8019–8025
Southwest Side (Springfield)
County—Clark
Parts:
C.T. 1–3
C.T. 8
C.T. 9.01–9.02
C.T. 10
C.T. 11.01–11.02
C.T. 12
The Flats (Warren)
County—Trumbull
Parts:
C.T. 9205–9207
West Dayton
County—Montgomery
Parts:
C.T. 2–4
C.T. 6–7
C.T. 9–10
C.T. 12–14
C.T. 35–45
C.T. 602–603
C.T. 702.01–702.02
C.T. 703
West End (Cincinnati)
County—Hamilton
Parts:
C.T. 2
C.T. 3.01–3.02
C.T. 4
C.T. 8
C.T. 14–15
West Middletown
County—Butler
Parts:
C.T. 128–132
C.T. 138–140
Western Collinwood
County—Cuyahoga
Parts:
C.T. 1169
C.T. 1171.01–1171.02
C.T. 1172.01–1172.02
C.T. 1173–1175
C.T. 1179
C.T. 1261
Woodsfield
County—Monroe
Parts:
Adams Township
Bethel Township
Center Township
Franklin Township
Green Township
Lee Township
Malaga Township
Ohio Township
Perry Township
Salem Township

PRIMARY MEDICAL CARE: Ohio
Service Area Listing

Service Area Name

Seneca Township
Summit Township
Sunsbury Township
Switzerland Township
Washington Township
Wayne Township

PRIMARY MEDICAL CARE: Ohio
Population Group Listing

Population Group

Homeless—Dayton
County—Montgomery
Parts:
C.T. 15
C.T. 21
Low Inc—Adams Co
County—Adams
Parts:
Low Income
Low Inc—Athens
County—Athens
Parts:
Low Income
Low Inc—Center City/Dorr (Toledo)
County—Lucas
Parts:
C.T. 24.02
C.T. 25–29
C.T. 31–37
Low Inc—Central/Fairfax/Kinsman
County—Cuyahoga
Parts:
C.T. 1079
C.T. 1087–1089
C.T. 1091–1093
C.T. 1096–1099
C.T. 1101–1103
C.T. 1129
C.T. 1131–1139
C.T. 1141–1145
C.T. 1147–1148
Low Inc—Coshocton Co
County—Coshocton
Parts:
Low Income
Low Inc—East Liverpool
County—Columbiana
Parts:
Center Twp
East Liverpool City
Elk Run Twp
Franklin Twp
Hanover Twp
Liverpool Twp
Madison Twp
Middleton Twp
St Clair Twp
Unity Twp
Washington Twp
Wayne Twp
Wellsville City
Yellow Creek Twp
County—Jefferson
Parts:
Brush Creek Twp
Saline Twp
Low Inc—Fayette Co
County—Fayette
Parts:
Low Income
Low Inc—Franklinton (Columbus)

PRIMARY MEDICAL CARE: Ohio
Population Group Listing

Population Group

County—Franklin
Parts:
C.T. 41–44
C.T. 49–51
Low Inc—Hardin Co
County—Hardin
Parts:
Low Income
Low Inc—Highland Co
County—Highland
Parts:
Low Income
Low Inc—Hocking Co
County—Hocking
Parts:
Low Income
Low Inc—Holmes Co
County—Holmes
Parts:
Low Income
Low Inc—Jackson Co
County—Jackson
Parts:
Low Income
Low Inc—Lee Miles (Cleveland)
County—Cuyahoga
Parts:
C.T. 1217–1219
C.T. 1221–1223
Low Inc—Meigs Co
County—Meigs
Parts:
Low Income
Low Inc—Morrow Co
County—Morrow
Parts:
Low Income
Low Inc—Near Southside (Columbus)
County—Franklin
Parts:
C.T. 37–38
C.T. 53
C.T. 54.10
C.T. 54.20
C.T. 55
C.T. 56.10
C.T. 56.20
C.T. 58.20
C.T. 59–61
C.T. 87.10
C.T. 87.20
C.T. 87.30
Low Inc—Pickaway Co
County—Pickaway
Parts:
Low Income
Low Inc—Pike Co
County—Pike
Parts:
Low Income
Low Inc—Richland
County—Richland
Parts:
Low Income
Low Inc—S Tuscarawas Co
County—Tuscarawas
Parts:
Clay Twp
Mill Twp
Oxford Twp
Rush Twp
Salem Twp

PRIMARY MEDICAL CARE: Ohio
Population Group Listing

Population Group

Union Twp
Warwick Twp
Washington Twp
Low Inc—Scioto Co
County—Scioto
Parts:
Low Income
Low Inc—Tiffin/Fostoria
County—Hancock
Parts:
C.T. 1 (Fostoria)
County—Seneca
Parts:
Low Income
County—Wood
Parts:
C.T. 222 (Fostoria)
Low Inc/MFW—Sandusky Co
County—Sandusky
Parts:
Low Income
MFW
Low Income—Near West/Westside/Edgewate
County—Cuyahoga
Parts:
C.T. 1011.01
C.T. 1012–1019
C.T. 1021.01–1021.02
C.T. 1022–1023
C.T. 1024.01–1024.02
C.T. 1025–1026
C.T. 1031–1039

PRIMARY MEDICAL CARE: Ohio
Facility Listing

Facility Name

Free Clinic Of Greater Cleveland 4
County—Cuyahoga
Maternal And Child Health Center
County—Butler
Neighborhood Family Practice
County—Cuyahoga
Noble Corr Fac
County—Noble

PRIMARY MEDICAL CARE: Oklahoma
County Listing

County Name

*Adair
*Alfalfa
*Atoka
Canadian
Facility: FCI El Reno
*Choctaw
*Coal
Creek
Population Group: Low Inc—Mounds
*Delaware
Population Group: Amer Indian Pop Delaware County
*Grant
*Harper
*Haskell
*Hughes
*Johnston
*Latimer
Population Group: Low Inc—Latimer Co
*Lincoln
Logan
*Marshall

PRIMARY MEDICAL CARE: Oklahoma
County Listing

County Name

*Mayes
Population Group: Native American Pop—Mayes Co
McClain
*McCurtain
Population Group: Native Am—Mccurtain Co (S)
*McIntosh
*Muskogee
Population Group: American Indian Pop Muskogee County
*Nowata
Service Area: Nowata
*Okfuskee
Oklahoma
Service Area: N.E. Oklahoma Co
Service Area: S.E. Oklahoma City
*Okmulgee
Population Group: Low Inc—Mounds
*Pittsburg
Service Area: Quinton
Population Group: Native Am—Pittsburg (S)
*Pontotoc
Population Group: Medicaid—Pontotoc Co
Pottawatomie
Service Area: Konawa
*Roger Mills
*Seminole
Service Area: Konawa
Sequoyah
Population Group: Amer Indian Pop Sequoyah County
*Texas
Service Area: Texoma
*Tillman
Tulsa
Service Area: North Tulsa
Population Group: Am In—Tulsa
*Washita

PRIMARY MEDICAL CARE: Oklahoma
Service Area Listing

Service Area Name

Konawa
County—Pottawatomie
Parts:
Maud Division
Wanette-Asher Division
County—Seminole
Parts:
Konawa Division
Seminole South Division
N.E. Oklahoma Co
County—Oklahoma
Parts:
C.T. 1080.03
C.T. 1080.05
C.T. 1080.10–1080.11
C.T. 1088.01
C.T. 1088.03–1088.04
North Tulsa
County—Tulsa
Parts:
C.T. 2–10
C.T. 12–14
C.T. 57
C.T. 62
C.T. 79
C.T. 80.01–80.02
C.T. 91.01

PRIMARY MEDICAL CARE: Oklahoma
Service Area Listing

Service Area Name

Nowata
County—Nowata
Parts:
Lenapah-Delaware Division
Nowata Division
South Coffeyville-Wann Division
Quinton
County—Pittsburg
Parts:
Quinton Division
S.E. Oklahoma City
County—Oklahoma
Parts:
C.T. 1037–1041
C.T. 1046–1050
C.T. 1053–1054
C.T. 1073.04
Texoma
County—Texas
Parts:
West Texas Division

PRIMARY MEDICAL CARE: Oklahoma
Population Group Listing

Population Group

Am In—Tulsa
County—Tulsa
Parts:
American Indian
Amer Indian Pop Delaware County
County—Delaware
Parts:
American Indian
Amer Indian Pop Sequoyah County
County—Sequoyah
Parts:
American Indian
American Indian Pop Muskogee County
County—Muskogee
Parts:
American Indian
Low Inc—Latimer Co
County—Latimer
Parts:
Low Income
Low Inc—Mounds
County—Creek
Parts:
C.T. 215
County—Okmulgee
Parts:
C.T. 6
Medicaid—Pontotoc Co
County—Pontotoc
Parts:
Medicaid
Native Am—Mccurtain Co (S)
County—McCurtain
Parts:
Native American
Native Am—Pittsburg (S)
County—Pittsburg
Parts:
Native American
Native American Pop—Mayes Co
County—Mayes
Parts:
Native American

PRIMARY MEDICAL CARE: Oklahoma
Facility Listing

Facility Name

FCI El Reno
County—Canadian

PRIMARY MEDICAL CARE: Oregon
County Listing

County Name

*Baker
Service Area: Halfway
*Benton
Service Area: Alsea
Clackamas
Service Area: Estacada
Service Area: Mt. Hood
Population Group: MSFWs—Western Clackamas Co
*Columbia
Service Area: Clatskanie
Service Area: East Columbia
Service Area: Vernonia
*Coos
Service Area: Powers
*Curry
Population Group: Low Inc—Port Orford
Population Group: Low Inc—Brookings
*Deschutes
Service Area: La Pine
*Douglas
Population Group: Low Inc/MFW—Douglas Co
*Gilliam
Service Area: Arlington
Service Area: Condon
*Grant
*Harney
Population Group: Low Inc—Harney Co
*Hood River
Population Group: MSFW—Hood River Co
Jackson
Service Area: Shady Cove
Population Group: MFW—Ashland/Phoenix
*Jefferson
Service Area: Madras
*Josephine
Service Area: Cave Junction
Service Area: Williams
Population Group: Low Inc—N Josephine Co
*Klamath
Service Area: Bly
Service Area: Chiloquin
Population Group: Low Inc/MFW—Klamath Falls
*Lake
Service Area: Silver Lake
Lane
Service Area: Lowell
Service Area: McKenzie
Service Area: Oakridge
Service Area: Triangle Lake/Swisshome
Population Group: Homeless-Mid Lane Co
*Malheur
Service Area: Jordan Valley
Service Area: Nyssa (OR/ID)
Service Area: Vale
Population Group: MSFW—Ontario
Facility: Snake River Corr. I.
Marion
Population Group: Low Inc/MFW/Homeless-Polk & Marion
*Morrow
Service Area: Boardman

PRIMARY MEDICAL CARE: Oregon
County Listing

County Name

Service Area: Heppner
Polk
Population Group: Low Inc/MFW/Homeless-Polk & Marion
*Sherman
Service Area: Moro/Grass Valley
Service Area: Wasco
*Tillamook
Service Area: Nehalem
Service Area: Pacific City/Cloverdale
Population Group: Low Inc/Homeless—Tillamook/Bay City
*Umatilla
Population Group: Low Inc/MFW—Umatilla Co
Facility: E Oregon Corr I
*Union
Service Area: Elgin
*Wasco
Service Area: Maupin/Dufur
Population Group: MFW—The Dalles
Washington
Population Group: MFW—W. Washington Co
*Wheeler
Yamhill
Facility: FCI Sheridan

PRIMARY MEDICAL CARE: Oregon
Service Area Listing

Service Area Name

Alsea
County—Benton
Parts:
C.T. 103
Arlington
County—Gilliam
Parts:
Arlington Division
Bly
County—Klamath
Parts:
Langell Division
Boardman
County—Morrow
Parts:
Boardman Division
Cave Junction
County—Josephine
Parts:
Cave Junction Division
Wilderville Division
Chiloquin
County—Klamath
Parts:
Chiloquin Division
Crescent Lake Division
Clatskanie
County—Columbia
Parts:
Clatskanie Division
Marshland Division
Condon
County—Gilliam
Parts:
Condon Division
East Columbia
County—Columbia
Parts:
Goble Division
Rainier Division

PRIMARY MEDICAL CARE: Oregon
Service Area Listing

Service Area Name

Scappoose Division
St. Helens Division
Elgin
County—Union
Parts:
Elgin Division
Estacada
County—Clackamas
Parts:
Estacada Division
Halfway
County—Baker
Parts:
Eagle Valley Division
Halfway Division
Heppner
County—Morrow
Parts:
Heppner Division
Ione-Lexington Division
Jordan Valley
County—Malheur
Parts:
Jordan Division
La Pine
County—Deschutes
Parts:
C.T. 9902–9905
Lowell
County—Lane
Parts:
Lowell Division
Madras
County—Jefferson
Parts:
Ashwood Division
Culver Division
Madras Division
Maupin/Dufur
County—Wasco
Parts:
Dufur CCD
McKenzie
County—Lane
Parts:
McKenzie Division
Moro/Grass Valley
County—Sherman
Parts:
Moro Division
Mt. Hood
County—Clackamas
Parts:
Mount Hood Division
Nehalem
County—Tillamook
Parts:
Nehalem Division
Nyssa (OR/ID)
County—Malheur
Parts:
Adrian Division
Nyssa Division
Owyhee Division
Oakridge
County—Lane
Parts:
Oakridge Division
Pacific City/Cloverdale
County—Tillamook
Parts:
Beaver Division

PRIMARY MEDICAL CARE: Oregon
Service Area Listing

Service Area Name

Neskowin Division
Powers
County—Coos
Parts:
Powers Division
Shady Cove
County—Jackson
Parts:
Butte Falls-Prospect Division
Shady Cove Division
Silver Lake
County—Lake
Parts:
Silver Lake-Fort Rock Division
Triangle Lake/Swisshome
County—Lane
Parts:
Middle Siuslaw-Triangle Lake Div
Vale
County—Malheur
Parts:
Brogan Division
Juntura Division
Vale Division
West Vale Division
Vernonia
County—Columbia
Parts:
Vernonia Division
Wasco
County—Sherman
Parts:
Wasco Division
Williams
County—Josephine
Parts:
Williams Division

PRIMARY MEDICAL CARE: Oregon
Population Group Listing

Population Group

Homeless-Mid Lane Co
County—Lane
Parts:
Badger Mountain Div
Coburg Div
Cottage Grove Div
Creswell Div
Eugene-Springfield Div
Junction City Div
Marcola Div
Pleasant Hill Div
Upper Siuslaw Div
Low Inc—Brookings
County—Curry
Parts:
Brookings CCD
Harbor CCD
Low Inc—Harney Co
County—Harney
Parts:
Low Income
Low Inc—N Josephine Co
County—Josephine
Parts:
Grants Pass Div
Northwest Josephine Div
Low Inc—Port Orford
County—Curry
Parts:
Agness Division

PRIMARY MEDICAL CARE: Oregon
Population Group Listing

Population Group

Port Orford Division
Low Inc/Homeless—Tillamook/Bay City
County—Tillamook
Parts:
Bay City CCD
Tillamook CCD
Low Inc/MFW—Douglas Co
County—Douglas
Parts:
Low Income/MFW
Low Inc/MFW—Klamath Falls
County—Klamath
Parts:
Keno CCD
Klamath Falls CCD
Malinccd
Merrill CCD
Low Inc/MFW—Umatilla Co
County—Umatilla
Parts:
Low Income
Migrant Farmworkers
Low Inc/MFW/Homeless-Polk & Marion
County—Marion
Parts:
Low Inc/MFW/Homeless
County—Polk
Parts:
Low Inc/MFW/Homeless
MFW—Ashland/Phoenix
County—Jackson
Parts:
Ashland CCD
Eagle Point CCD
Southeast Jackson CCD
Southwest Jackson CCD
MFW—The Dalles
County—Wasco
Parts:
The Dalles CCD
MFW—W. Washington Co
County—Washington
Parts:
Chehalem Mt CCD
Coast Range CCD
Forest Grove-Cornelius
North Plains CCD
MSFW—Hood River Co
County—Hood River
Parts:
MSFW
MSFW—Ontario
County—Malheur
Parts:
Ontario CCD
MSFWs—Western Clackamas Co
County—Clackamas
Parts:
Beaver Creek CCD
Canby CCD
Colton CCD
Molalla CCD
Mulino CCD
Northwest Clackamas CCD
Redland CCD
Sandy CCD
Wilsonville CCD
Yoder CCD

PRIMARY MEDICAL CARE: Oregon
Facility Listing

Facility Name

E Oregon Corr I
County—Umatilla
FCI Sheridan
County—Yamhill
Snake River Corr. I.
County—Malheur

PRIMARY MEDICAL CARE: Pennsylvania
County Listing

County Name

Allegheny
Service Area: Arlington Heights/St Clair
Service Area: Hill District
Service Area: Homewood-Brushton
Service Area: Manchester
Service Area: McKees Rocks-Stowe
Service Area: McKeesport City
Service Area: North Braddock
Service Area: South Braddock
Service Area: West End Pittsburgh
Population Group: Low Inc—East Liberty
*Armstrong
Service Area: Armstrong-Clarion
Service Area: Dayton/Rural Valley
Service Area: Kiski Valley
Service Area: New Bethlehem/Hawthorn
Service Area: Northeast Butler
Beaver
Population Group: Low Inc—East Liverpool
*Bedford
Service Area: Broad Top/Cromwell
Population Group: Low Inc—Pleasantville
Blair
Population Group: Low Inc—Pleasantville
*Bradford
Service Area: La Porte
Butler
Service Area: Northeast Butler
Cambria
Service Area: Coalport
Population Group: Low Inc—Ebensburg
Facility: SCI Cresson
*Cameron
Centre
Service Area: Snow Shoe
Population Group: Low Inc—Philipsburg
Facility: SCI Rockview
*Clarion
Service Area: Armstrong-Clarion
Service Area: New Bethlehem/Hawthorn
Service Area: Tionesta
*Clearfield
Service Area: Coalport
Service Area: Mahaffey
Service Area: Snow Shoe
Population Group: Low Inc—Philipsburg
Facility: SCI Houtzdale
*Clinton
Service Area: Snow Shoe
Service Area: Western Lycoming
Columbia
Service Area: Eastern Lycoming
*Crawford
Service Area: Conneautville
Service Area: Union City/Corry
Population Group: Low Inc—Titusville
Cumberland
Facility: SCI Camp Hill
Dauphin
Service Area: Millersburg
Population Group: Low Inc—Harrisburg

PRIMARY MEDICAL CARE: Pennsylvania
County Listing

County Name

*Elk
Service Area: Marienville
Erie
Service Area: Union City/Corry
Population Group: Low Inc—Erie City
Fayette
Service Area: Markleysburg
Service Area: Republic
Population Group: Low Inc—Greensboro
*Forest
Service Area: Marienville
Service Area: Tionesta
*Franklin
Service Area: Dry Run
Population Group: Low Inc/MFW—Chambersburg
*Fulton
Service Area: Broad Top/Cromwell
Service Area: Hancock (MD/PA)
*Greene
Service Area: Clay/Battelle (WV/PA)
Population Group: Low Inc—Carmichaels
Population Group: Low Inc—Greensboro
Population Group: Low Inc—Western Greene
Facility: SCI Greene
*Huntingdon
Service Area: Alexandria
Service Area: Broad Top/Cromwell
Service Area: Mt. Union
Population Group: Low Inc—Big Valley
Facility: SCI Smithfield
*Indiana
Service Area: Dayton/Rural Valley
Service Area: North Indiana
Population Group: Low Inc—Punxsutawney
Population Group: Low Inc—Ebensburg
*Jefferson
Population Group: Low Inc—Punxsutawney
*Juniata
Population Group: Low Inc—Middleburg
Population Group: Low Inc—Mifflintown
Lancaster
Service Area: SE Lancaster City
Population Group: Low Inc—Welsh Mountain
Lycoming
Service Area: Eastern Lycoming
Service Area: Northern Lycoming
Service Area: Western Lycoming
Facility: SCI Muncy
*McKean
Population Group: Low Inc—Coudersport
Facility: FCI Mckean
Mercer
Service Area: Stoneboro
*Mifflin
Service Area: Mt. Union
Population Group: Low Inc—Big Valley
Monroe
Service Area: Mount Pocono
Service Area: South Monroe
*Northumberland
Service Area: Herndon
Service Area: Millersburg
Philadelphia
Service Area: Upper N. East Philadelphia
Service Area: Upper N. West Philadelphia
Population Group: Low Inc—Lower North Philadelphia
*Pike
Population Group: Low Inc—Paupack

PRIMARY MEDICAL CARE: Pennsylvania
County Listing

County Name

*Potter
Service Area: Westfield
Population Group: Low Inc—Coudersport
*Schuylkill
Service Area: Millersburg
Facility: FCI Schuylkill
*Snyder
Population Group: Low Inc—Middleburg
Population Group: Low Inc—Mcclure
Somerset
Service Area: Indian Lake
Population Group: Low Inc—Confluence Service Area
*Sullivan
Service Area: La Porte
Service Area: Northern Lycoming
*Susquehanna
Service Area: Montrose
*Tioga
Service Area: Blossburg
Service Area: Elkland (NY/PA)
Service Area: Western Lycoming
Service Area: Westfield
Population Group: Low Inc—Coudersport
*Union
Population Group: Low Inc—Mcclure
Facility: FCI Allenwood
Facility: USP Allenwood
Facility: USP Lewisburg
*Venango
Service Area: Tionesta
Population Group: Low Inc—Titusville
*Warren
Service Area: Marienville
Service Area: Tionesta
Service Area: Union City/Corry
Population Group: Low Inc—Titusville
*Wayne
Population Group: Low Inc—Honesdale
Population Group: Low Inc—Northern Wayne
Population Group: Low Inc—Paupack
Westmoreland
Service Area: Kiski Valley
Population Group: Low Inc—Ebensburg
York
Population Group: Low Inc—York City

PRIMARY MEDICAL CARE: Pennsylvania
Service Area Listing

Service Area Name

Alexandria
County—Huntingdon
Parts:
Alexandria Borough
Franklin Township
Logan Township
Morris Township
Petersburg Borough
Porter Township
Spruce Creek Township
Arlington Heights/St Clair
County—Allegheny
Parts:
C.T. 1603–1604
C.T. 1606
Armstrong-Clarion
County—Armstrong
Parts:
Bradys Bend Township
Madison Township

PRIMARY MEDICAL CARE: Pennsylvania
Service Area Listing

Service Area Name

Perry Township
Sugarcreek Township
Washington Township
County—Clarion
Parts:
Brady Township
East Brady Borough
Madison Township
Rimersburg Borough
Blossburg
County—Tioga
Parts:
Bloss Township
Blossburg Borough
Covington Township
Duncan Township
Hamilton Township
Liberty Borough
Liberty Township
Putnam Township
Union Township
Ward Township
Broad Top/Cromwell
County—Bedford
Parts:
Broad Top Township
Coaldale Borough
Hopewell Borough
Hopewell Township
Liberty Township
Saxton Borough
County—Fulton
Parts:
Dublin Township
Taylor Township
Wells Township
County—Huntingdon
Parts:
Broad Top City Borough
Carbon Township
Clay Township
Coalmont Borough
Dublin Township
Dudley Borough
Hopewell Township
Juniata Township
Lincoln Township
Marklesburg Borough
Penn Township
Saltillo Borough
Shade Gap Borough
Smithfield Township
Springfield Township
Three Springs Borough
Todd Township
Walker Township
Wood Township
Clay/Battelle (WV/PA)
County—Greene
Parts:
Freeport Township
Gilmore Township
Springhill Township
Wayne Township
Coalport
County—Cambria
Parts:
Reade Township
White Township
County—Clearfield
Parts:
Beccaria Township

PRIMARY MEDICAL CARE: Pennsylvania
Service Area Listing

Service Area Name

Bigler Township
Chest Township
Coalport Borough
Glen Hope Borough
Gulich Township
Irvona Borough
Jordan Township
Ramey Borough
Westover Borough
Conneautville
County—Crawford
Parts:
Beaver Township
Conneaut Township
Conneautville Borough
Spring Township
Springboro Borough
Summerhill Township
Dayton/Rural Valley
County—Armstrong
Parts:
Atwood Borough
Boggs Township
Cowanshannock Township
Dayton Borough
Elderton Borough
Pine Township
Plumcreek Township
Rural Valley Borough
Valley Township
Wayne Township
County—Indiana
Parts:
Plumville Borough
South Mahoning Township
Dry Run
County—Franklin
Parts:
Fannett Township
Metal Township
Eastern Lycoming
County—Columbia
Parts:
Greenwood Township
Jackson Township
Madison Township
Millville Borough
Pine Township
County—Lycoming
Parts:
Franklin Township
Jordan Township
Moreland Township
Penn Township
Picture Rocks Borough
Shrewsbury Township
Elkland (NY/PA)
County—Tioga
Parts:
Elkland Borough
Elkland Township
Farmington Township
Nelson Township
Osceola Township
Hancock (MD/PA)
County—Fulton
Parts:
Bethel Township
Thompson Township
Union Township
Herndon
County—Northumberland

PRIMARY MEDICAL CARE: Pennsylvania
Service Area Listing

Service Area Name

Parts:
Herndon Borough
Jackson Township
Jordan Township
Little Mahanoy Township
Upper Mahanoy Township
Washington Township
West Cameron Township
Zerbe Township
Hill District
County—Allegheny
Parts:
C.T. 305
C.T. 314
C.T. 501–502
C.T. 506
C.T. 508–511
Homewood-Brushton
County—Allegheny
Parts:
C.T. 1207
C.T. 1301–1306
C.T. 5604
C.T. 5606
C.T. 5611–5612
Indian Lake
County—Somerset
Parts:
Central City Borough
Indian Lake Borough
Shade Township
Shanksville Borough
Stonycreek Township
Kiski Valley
County—Armstrong
Parts:
Apollo Borough
Bethel Township
Burrell Township
Gilpin Township
Kiskiminetas Township
Leechburg Borough
North Apollo Borough
Parks Township
South Bend Township
County—Westmoreland
Parts:
Allegheny Township
Avonmore Borough
Bell Township
East Vandergrift Borough
Hyde Park Borough
Oklahoma Borough
Vandergrift Borough
Washington Township
West Leechburg Borough
La Porte
County—Bradford
Parts:
Albany Township
New Albany Borough
Overton Township
Wilmot Township
County—Sullivan
Parts:
Cherry Township
Colley Township
Davidson Township
Dushore Borough
Eagles Mere Borough
Elkland Township
Forks Township

PRIMARY MEDICAL CARE: Pennsylvania
Service Area Listing

Service Area Name

Forksville Borough
Hillsgrove Township
Laporte Borough
Laporte Township
Shrewsbury Township
Mahaffey
County—Clearfield
Parts:
Bell Township
Burnside Borough
Burnside Township
Ferguson Township
Grampian Borough
Greenwood Township
Lumber City Borough
Mahaffey Borough
New Washington Borough
Newburg Borough
Penn Township
Manchester
County—Allegheny
Parts:
C.T. 2107
C.T. 2503
C.T. 2507–2508
Marienville
County—Elk
Parts:
Millstone Township
County—Forest
Parts:
Barnett Township
Green Township
Howe Township
Jenks Township
Kingsley Township
County—Warren
Parts:
Cherry Grove Township
Sheffield Township
Markleysburg
County—Fayette
Parts:
Henry Clay Township
Markleysburg Borough
Ohiopyle Borough
Stewart Township
Wharton Township
McKees Rocks-Stowe
County—Allegheny
Parts:
C.T. 4621
C.T. 4626
C.T. 4639
C.T. 4644
McKeesport City
County—Allegheny
Parts:
C.T. 5010
C.T. 5509
C.T. 5512–5513
C.T. 5519–5524
Millersburg
County—Dauphin
Parts:
Berrysburg Borough
Elizabethville Borough
Gratz Borough
Halifax Borough
Halifax Township
Jackson Township
Jefferson Township

PRIMARY MEDICAL CARE: Pennsylvania
Service Area Listing

Service Area Name

Lykens Borough
Lykens Township
Mifflin Township
Millersburg Borough
Pillow Borough
Reed Township
Rush Township
Upper Paxton Township
Washington Township
Wayne Township
Wiconisco Township
Williams Township
Williamstown Borough
County—Northumberland
Parts:
Lower Mahanoy Township
County—Schuylkill
Parts:
Porter Township
Tower City Borough
Montrose
County—Susquehanna
Parts:
Auburn Township
Bridgewater Township
Brooklyn Township
Dimock Township
Forest Lake Township
Franklin Township
Great Bend Township
Great Bend Borough
Hallstead Borough
Harford Township
Hop Bottom Borough
Jessup Township
Lathrop Township
Lenox Township
Liberty Township
Montrose Borough
New Milford Township
New Milford Borough
Rush Township
Silver Lake Township
Springville Township
Mount Pocono
County—Monroe
Parts:
Barrett Township
Coolbaugh Township
Jackson Township
Mount Pocono Borough
Paradise Township
Pocono Township
Price Township
Tobyhanna Township
Tunkhannock Township
Mt. Union
County—Huntingdon
Parts:
Brady Township
Cass Township
Cassville Borough
Cromwell Township
Mapleton Borough
Mill Creek Borough
Mount Union Borough
Orbisonia Borough
Rockhill Furnace Borough
Shirley Township
Shirleysburg Borough
Tell Township
Union Township

PRIMARY MEDICAL CARE: Pennsylvania
Service Area Listing

Service Area Name

County—Mifflin
Parts:
Bratton Township
Kistler Borough
McVeytown Borough
Newton Hamilton Borough
Oliver Township
Wayne Township
New Bethlehem/Hawthorn
County—Armstrong
Parts:
Mahoning Township
Redbank Township
South Bethlehem Borough
County—Clarion
Parts:
Hawthorn Borough
New Bethlehem Borough
Porter Township
Redbank Township
North Braddock
County—Allegheny
Parts:
C.T. 5041
C.T. 5100
C.T. 5120
C.T. 5128–5129
C.T. 5138
C.T. 5140
North Indiana
County—Indiana
Parts:
Cherry Tree Borough
East Mahoning Township
Ernest Borough
Grant Township
Green Township
Marion Center Borough
Montgomery Township
Rayne Township
Northeast Butler
County—Armstrong
Parts:
Hovey Township
Parker City
County—Butler
Parts:
Allegheny Township
Bruin Borough
Cherry Valley Borough
Concord Township
Eau Claire Borough
Fairview Borough
Fairview Township
Karns City Borough
Parker Township
Petrolia Borough
Venango Township
Washington Township
Northern Lycoming
County—Lycoming
Parts:
Cascade Township
Gamble Township
Lewis Township
McIntyre Township
McNett Township
Mill Creek Township
Plunketts Creek Township
County—Sullivan
Parts:
Fox Township

PRIMARY MEDICAL CARE: Pennsylvania
Service Area Listing

Service Area Name

Republic
County—Fayette
Parts:
Brownsville Borough
Brownsville Township
Luzerne Township
Redstone Township
Fannet Twp
Parts:
Metal Twp
Snow Shoe
County—Centre
Parts:
Boggs Township
Burnside Township
Curtin Township
Howard Township
Howard Borough
Liberty Township
Milesburg Borough
Snow Shoe Township
Snow Shoe Borough
Union Township
Unionville Borough
County—Clearfield
Parts:
Cooper Township
Covington Township
Karthaus Township
County—Clinton
Parts:
Beech Creek Township
Beech Creek Borough
West Keating Township
South Braddock
County—Allegheny
Parts:
C.T. 4824
C.T. 4838
C.T. 4843
C.T. 4850
C.T. 4867–4869
C.T. 4882
South Monroe
County—Monroe
Parts:
Chestnuthill Township
Eldred Township
Polk Township
Ross Township
Stoneboro
County—Mercer
Parts:
Coolspring Township
Deer Creek Township
Fairview Township
Fredonia Borough
French Creek Township
Jackson Center Borough
Jackson Township
Lake Township
Mill Creek Township
New Lebanon Borough
New Vernon Township
Perry Township
Sandy Lake Township
Sandy Lake Borough
Stoneboro Borough
SE Lancaster City
County—Lancaster
Parts:
C.T. 1
C.T. 7–9
C.T. 14–16
Tionesta
County—Clarion
Parts:
Farmington Township
Knox Township
Washington Township
County—Forest
Parts:
Harmony Township
Hickory Township
Tionesta Borough
Tionesta Township
County—Venango
Parts:
Pinegrove Township
President Township
County—Warren
Parts:
Deerfield Township
Limestone Township
Tidioute Borough
Triumph Township
Union City/Corry
County—Crawford
Parts:
Bloomfield Township
Rockdale Township
Spartansburg Borough
Sparta Township
County—Erie
Parts:
Amity Township
Concord Township
Corry City
Elgin Borough
Greene Township
Le Boeuf Township
Mill Village Borough
Union Township
Union City Borough
Venango Township
Waterford Township
Waterford Borough
Wattsburg Borough
Wayne Township
County—Warren
Parts:
Columbus Township
Spring Creek Township
Upper N. East Philadelphia
County—Philadelphia
Parts:
C.T. 175–176
C.T. 194–199
C.T. 287
Upper N. West Philadelphia
County—Philadelphia
Parts:
C.T. 170–174
C.T. 200–205
C.T. 280
C.T. 283–284
West End Pittsburgh
County—Allegheny
Parts:
C.T. 2004
C.T. 2017–2022
C.T. 2024
C.T. 2807–2808
C.T. 2814
C.T. 2816
Western Lycoming
County—Clinton
Parts:
Gallagher Township
County—Lycoming
Parts:
Brown Township
Cogan House Township
Cummings Township
Jackson Township
McHenry Township
Pine Township
Watson Township
County—Tioga
Parts:
Elk Township
Morris Township
Westfield
County—Potter
Parts:
Harrison Township
Hector Township
County—Tioga
Parts:
Brookfield Township
Chatham Township
Clymer Township
Deerfield Township
Knoxville Borough
Westfield Borough
Westfield Township

PRIMARY MEDICAL CARE: Pennsylvania
Population Group Listing

Population Group

Low Inc—Big Valley
County—Huntingdon
Parts:
Barree Twp
Jackson Twp
Miller Twp
County—Mifflin
Parts:
Armagh Twp
Brown Twp
Decatur Twp
Menno Twp
Union Twp
Low Inc—Carmichaels
County—Greene
Parts:
Carmichaels Borough
Clarksville Borough
Cumberland Township
Jefferson Borough
Jefferson Township
Morgan Township
Rices Landing Borough
Low Inc—Confluence Service Area
County—Somerset
Parts:
Addison Twp
Addison Borough
Casselman Borough
Confluence Borough
Lower Turkeyfoot Twp
Middlecreek Twp
Seven Springs Borough
Upper Turkeyfoottwp
Ursina Borough

PRIMARY MEDICAL CARE: Pennsylvania
Population Group Listing

Population Group

Low Inc—Coudersport
County—McKean
Parts:
Annin Township
Ceres Township
Eldred Borough
Eldred Township
Keating Township
Liberty Township
Norwich Township
Otto Township
Port Allegany Borough
Smethport Borough
County—Potter
Parts:
Abbott Township
Allegany Township
Austin Borough
Bingham Township
Clara Township
Coudersport Borough
East Fork District
Eulalia Township
Galton Borough
Genesee Township
Hebron Township
Homer Township
Keating Township
Oswayo Township
Oswayo Borough
Pike Township
Pleasant Valley Township
Portage Township
Roulette Township
Sharon Township
Shinglehouse Borough
Stewardson Township
Summit Township
Sweden Township
Sylvania Township
Ulysses Borough
Ulysses Township
West Branch Township
Wharton Township
County—Tioga
Parts:
Gaines Township
Low Inc—East Liberty
County—Allegheny
Parts:
C.T. 818
C.T. 1016–1017
C.T. 1113–1115
C.T. 1201–1204
C.T. 1208
Low Inc—East Liverpool
County—Beaver
Parts:
Georgetown Boro
Glasgow Boro
Greene Twp
Hookstown Boro
Ohioville Boro
Low Inc—Ebensburg
County—Cambria
Parts:
Allegheny Borough
Ashville Borough
Barnesboro Borough
Barr Township
Blacklick Township
Cambria Township

PRIMARY MEDICAL CARE: Pennsylvania
Population Group Listing

Population Group

Carrolltown Borough
Cassandra Borough
Chest Springs Borough
Cresson Borough
Cresson Township
East Carroll Township
Ebensburg Borough
Gallitzin Borough
Gallitzin Township
Jackson Township
Lilly Borough
Loretto Borough
Munster Township
Nanty-Glo Borough
Patton Borough
Portage Borough
Portage Township
Sankertown Borough
Spangler Borough
Susquehanna Township
Tunnelhill Borough
Vintondale Borough
Washington Township
West Carroll Township
County—Indiana
Parts:
Armagh Borough
Buffington Township
East Wheatfield Township
Pine Township
West Wheatfield
County—Westmoreland
Parts:
New Florence Borough
Seward Borough
St. Clair Township
Low Inc—Erie City
County—Erie
Parts:
C.T. 1–31
Low Inc—Greensboro
County—Fayette
Parts:
Nicholson Twp
Point Marion Boro
Springhill Twp
County—Greene
Parts:
Dunkard Twp
Greene Twp
Greensboro Boro
Monongahela Twp
Low Inc—Harrisburg
County—Dauphin
Parts:
C.T. 201–217
Low Inc—Honesdale
County—Wayne
Parts:
Berlin Township
Bethany Borough
Canaan Township
Cherry Ridge Township
Clinton Township
Dyberry Townshhip
Honesdale Borough
Oregon Township
Prompton Borough
South Canaan Township
Texas Township
Waymart Borough
Low Inc—Lower North Philadelphia

PRIMARY MEDICAL CARE: Pennsylvania
Population Group Listing

Population Group

County—Philadelphia
Parts:
C.T. 126–133
C.T. 133–142
C.T. 144–157
C.T. 162–169
Low Inc—Mcclure
County—Snyder
Parts:
Adams Twp
McClure Boro
Spring Twp
West Beaver Twp
County—Union
Parts:
Hartley Twp
Hartleton Boro
Low Inc—Middleburg
County—Juniata
Parts:
Monroe Township
Susquehanna Township
County—Snyder
Parts:
Beaver Township
Beavertown Borough
Centre Township
Chapman Township
Franklin Township
Freeburg Borough
Middleburg Borough
Perry Township
Union Township
Washington Township
West Perry Township
Low Inc—Mifflintown
County—Juniata
Parts:
Beale Township
Fayette Township
Fermanagh Township
Lack Township
Mifflin Borough
Mifflintown Borough
Milford Township
Port Royal Borough
Spruce Hill Township
Turbett Township
Tuscarora Township
Walker Township
Low Inc—Northern Wayne
County—Wayne
Parts:
Buckingham Township
Damascus Township
Lebanon Township
Manchester Township
Mt. Pleasant Township
Preston Township
Scott Township
Starrucca Borough
Low Inc—Paupack
County—Pike
Parts:
Blooming Grove Twp.
Greene Township
Lackawaxen Township
Palmyra Township
Porter Townsip
Shohola Township
County—Wayne
Parts:

PRIMARY MEDICAL CARE: Pennsylvania
Population Group Listing

Population Group

Dreher Township
Hawley Borough
Lake Township
Palmyra Township
Paupack Township
Salem Township
Sterling Township
Low Inc—Philipsburg
County—Centre
Parts:
Philipsburg Boro
Rush Twp
South Philipsburg Boro
County—Clearfield
Parts:
Boggs Twp
Brisbin Boro
Chester Hill Boro
Decatur Twp
Graham Twp
Houtzdale Boro
Morris Twp
Osceola Mills Boro
Wallaceton Boro
Woodward Twp
Low Inc—Pleasantville
County—Bedford
Parts:
East St. Clair Township
Kimmel Township
King Township
Lincoln Township
Pleasantville Borough
St. Clairsville Borough
Union Township
West St. Clair Township
County—Blair
Parts:
Greenfield Township
Low Inc—Punxsutawney
County—Indiana
Parts:
Banks Township
Canoe Township
Glen Campbellborough
North Mahoning Township
Smicksburg Borough
West Mahoning Township
County—Jefferson
Parts:
Beaver Township
Bell Township
Big Run Borough
Gaskill Township
Henderson Township
McCalmont Township
Oliver Township
Perry Township
Porter Township
Punxsutawney Burough
Ringgold Township
Timblin Borough
Worthville Borough
Young Township
Low Inc—Titusville
County—Crawford
Parts:
Athens Township
Centreville Borough
Hydetown Borough
Oil Creek Township
Randolph Township

PRIMARY MEDICAL CARE: Pennsylvania
Population Group Listing

Population Group

Richmond Township
Rome Township
Steuben Township
Titusville City
Townville Borough
Troy Township
Wayne Township
County—Venango
Parts:
Allegheny Township
Cherrytree Township
Cooperstown Borough
Jackson Township
Oilcreek Township
Pleasantville Borough
Plum Township
County—Warren
Parts:
Eldred Township
Southwest Township
Low Inc—Welsh Mountain
County—Lancaster
Parts:
Bart Twp
Brecknock Twp
Caernarvon Twp
Christiana Boro
Colerain Twp
Earl Twp
East Earl Twp
Eden Twp
Leacock Twp
Little Britain Twp
New Holland Boro
Paradise Twp
Quarryville Boro
Sadsbury Twp
Salisbury Twp
Terre Hill Boro
Low Inc—Western Greene
County—Greene
Parts:
Aleppo Twp
Center Twp
Franklin Twp
Gray Twp
Jackson Twp
Morris Twp
Richhill Twp
Washington Twp
Waynesburg Boro
Low Inc—York City
County—York
Parts:
C.T. 1–3
C.T. 5–7
C.T. 9–12
C.T. 15–16
Low Inc/MFW—Chambersburg
County—Franklin
Parts:
Chambersburg Boro
Hamilton Twp
Letterkenny Twp
St. Thomas Twp

PRIMARY MEDICAL CARE: Pennsylvania
Facility Listing

Facility Name

FCI Allenwood
County—Union

PRIMARY MEDICAL CARE: Pennsylvania
Facility Listing

Facility Name

FCI Mckean
County—McKean
FCI Schuylkill
County—Schuylkill
SCI Camp Hill
County—Cumberland
SCI Cresson
County—Cambria
SCI Greene
County—Greene
SCI Houtzdale
County—Clearfield
SCI Muncy
County—Lycoming
SCI Rockview
County—Centre
SCI Smithfield
County—Huntingdon
USP Allenwood
County—Union
USP Lewisburg
County—Union

PRIMARY MEDICAL CARE: Rhode Island
County Listing

County Name

Newport
Population Group: Low Inc—Newport/Middletown
Providence
Service Area: Northwest Providence
Service Area: Northwest Woonsocket
Population Group: Low Inc—Pawtucket/Central Falls
Population Group: Low Inc—Providence City
Facility: RI Adult Corr Inst (Cranston)
Washington
Population Group: Narragansett Indian Tribe
Facility: Health Center Of South County
Facility: Wood River Health Services

PRIMARY MEDICAL CARE: Rhode Island
Service Area Listing

Service Area Name

Northwest Providence
County—Providence
Parts:
Burrillville Town
Foster Town
Glocester Town
Northwest Woonsocket
County—Providence
Parts:
C.T. 172
C.T. 174
C.T. 176
C.T. 178–182

PRIMARY MEDICAL CARE: Rhode Island
Population Group Listing

Population Group

Low Inc—Newport/Middletown 2
County—Newport
Parts:
C.T. 402
C.T. 403.02–403.03
C.T. 405–408

PRIMARY MEDICAL CARE: Rhode Island
Population Group Listing

Population Group

C.T. 410
C.T. 412
Low Inc—Pawtucket/Central Falls
County—Providence
Parts:
C.T. 109–111
C.T. 149–156
C.T. 156–161
C.T. 163–166
C.T. 167.97–167.98
C.T. 168–171
Low Inc—Providence City
County—Providence
Parts:
C.T. 1–23
C.T. 25–33
C.T. 35–37
Narragansett Indian Tribe
County—Washington
Parts:
Charlestown Town

PRIMARY MEDICAL CARE: Rhode Island
Facility Listing

Facility Name

Health Center Of South County
County—Washington
RI Adult Corr Inst (Cranston)
County—Providence
Wood River Health Services
County—Washington

PRIMARY MEDICAL CARE: South Carolina
County Listing

County Name

*Abbeville
Population Group: Low Inc—Abbeville
Aiken
Population Group: Low Inc—Aiken Co
*Allendale
Facility: Low Co Health Care System
Anderson
Population Group: Low Inc—Anderson Co
*Bamberg
Population Group: Low Inc—Bamberg
*Barnwell
Population Group: Low Inc—Barnwell
*Beaufort
Service Area: Sheldon
Berkeley
Service Area: McClellanville
Service Area: Northern Berkeley
*Calhoun
Charleston
Service Area: McClellanville
Service Area: Sea Island
Population Group: Low Inc—North Charleston
Population Group: Low Inc—Peninsula Charleston
Cherokee
Population Group: Low Inc—Cherokee
*Chester
Population Group: Low Inc—Chester Co
*Chesterfield
Service Area: Sandhills
Population Group: Low Inc—Society Hill/E Chesterfield
*Clarendon
*Colleton

PRIMARY MEDICAL CARE: South Carolina
County Listing

County Name

Population Group: Low Inc—Colleton
*Darlington
Population Group: Low Inc—Darlington
Population Group: Low Inc—Society Hill/E Chesterfield
*Dillon
Population Group: Low Inc—Dillon
Dorchester
Service Area: St George
Edgefield
*Fairfield
Florence
Service Area: Johnsonville/Brittons Neck
Service Area: Olanta
Population Group: Low Inc—Florence
Population Group: Low Inc—Lake City
*Georgetown
Population Group: Low Inc—Georgetown
Greenville
Service Area: Slater-Marietta
Population Group: Low Inc—Inner City Greenville
*Hampton (g)
Facility: FCI Estil
Horry
Population Group: Low Inc—Little River
Population Group: Low Inc—Loris
Population Group: Low Inc—Conway
*Jasper
*Kershaw
Population Group: Low Inc—Kershaw
*Laurens
Population Group: Low Inc—Laurens
*Lee
Lexington
Service Area: Batesburg/Leesville
Service Area: Pelion-Swansea
*Marion
Service Area: Johnsonville/Brittons Neck
Population Group: Low Inc—Marion/Mullins
*Marlboro
*McCormick
*Newberry
Service Area: Whitmire
*Oconee
Population Group: Low Inc—Oconee Co
*Orangeburg
Service Area: Eastern Orangeburg
Population Group: Low Inc—Western Orangeburg
Pickens
Population Group: Low Inc—Pickens
Richland
Service Area: Eastover/Hopkins
Population Group: Low Inc—Columbia
*Saluda
Spartanburg
Service Area: Chesnee
Service Area: Woodruff/Enoree
Sumter
Service Area: Olanta
*Union
*Williamsburg
York
Service Area: Western York
Population Group: Low Inc—South Rock Hill

PRIMARY MEDICAL CARE: South Carolina
Service Area Listing

Service Area Name

Batesburg/Leesville
County—Lexington
Parts:
Batesburg-Leesville Division
Gilbert Division
Chesnee
County—Spartanburg
Parts:
Chesnee Division
Mayo Division
Eastern Orangeburg
County—Orangeburg
Parts:
Bowman Division
Elloree Division
Eutawville Division
Holly Hill Division
Vance Division
Eastover/Hopkins
County—Richland
Parts:
Eastover Division
Hopkins Division
Johnsonville/Brittons Neck
County—Florence
Parts:
Johnsonville Division
County—Marion
Parts:
Brittons Neck Division
Centenary Division
McClellanville
County—Berkeley
Parts:
C.T. 204.01
County—Charleston
Parts:
C.T. 46.01
C.T. 50
Northern Berkeley
County—Berkeley
Parts:
Bonneau Division
Cross Division
Moncks Corner Division
St. Stephen Division
Olanta
County—Florence
Parts:
Olanta Division
Sardis Division
County—Sumter
Parts:
Shiloh Division
Pelion-Swansea
County—Lexington
Parts:
Pelion Division
Swansea Division
Sandhills
County—Chesterfield
Parts:
Jefferson Division
McBee Division
Pageland Division
Sea Island
County—Charleston
Parts:
Edisto Island Division
Johns Island Division
Ravenel Division
Wadmalaw Island Division

PRIMARY MEDICAL CARE: South Carolina
Service Area Listing

Service Area Name

Sheldon
County—Beaufort
Parts:
Sheldon Division
Slater-Marietta
County—Greenville
Parts:
Highland Division
Slater Division
Tigerville Division
St George
County—Dorchester
Parts:
Harleyville Division
Reevesville Division
St. George Division
Western York
County—York
Parts:
Clover Division
Hickory Grove Division
McConnells Division
York Division
Whitmire
County—Newberry
Parts:
Whitmire Division
Woodruff/Enoree
County—Spartanburg
Parts:
Enoree Division
Woodruff Division

PRIMARY MEDICAL CARE: South Carolina
Population Group Listing

Population Group

Low Inc—Abbeville
County—Abbeville
Parts:
Low Income
Low Inc—Aiken Co
County—Aiken
Parts:
Low Income
Low Inc—Anderson Co
County—Anderson
Parts:
Low Income
Low Inc—Bamberg
County—Bamberg
Parts:
Low Income
Low Inc—Barnwell
County—Barnwell
Parts:
Low Income
Low Inc—Cherokee
County—Cherokee
Parts:
Low Income
Low Inc—Chester Co
County—Chester
Parts:
Low Income
Low Inc—Colleton
County—Colleton
Parts:
Low Income
Low Inc—Columbia
County—Richland
Parts:

PRIMARY MEDICAL CARE: South Carolina
Population Group Listing

Population Group

C.T. 1–19
C.T. 20.01–20.02
C.T. 21–28
C.T. 105.01–105.02
C.T. 106
C.T. 107.01–107.03
C.T. 108.02–108.04
C.T. 109–110
C.T. 111.01–111.02
C.T. 112.01–112.02
C.T. 114.04
C.T. 115
C.T. 116.03–116.06
C.T. 117.01–117.02
Low Inc—Conway
County—Horry
Parts:
Aynor CCD
Conway CCD
Conway East CCD
Low Inc—Darlington
County—Darlington
Parts:
Darlington Division
Lake Swanp Division
Lamar Division
Low Inc—Dillon
County—Dillon
Parts:
Low Income
Low Inc—Florence
County—Florence
Parts:
Danwood Division
Florence Division
Pamplico Division
Timmonsville Division
Low Inc—Georgetown
County—Georgetown
Parts:
Andrews CCD
Georgetown CCD
Plantersville CCD
Pleasanthill-Folly Grove
Sampit-Santee CCD
Low Inc—Inner City Greenville
County—Greenville
Parts:
C.T. 1–10
C.T. 12.02
C.T. 13.01
C.T. 21.04–21.05
C.T. 21.08
C.T. 22.01–22.02
C.T. 23.03–23.04
Low Inc—Kershaw
County—Kershaw
Parts:
Low Income
Low Inc—Lake City
County—Florence
Parts:
Coward CCD
Lake City—Scranton
Low Inc—Laurens
County—Laurens
Parts:
Low Income
Low Inc—Little River
County—Horry
Parts:
C.T. 401–402

PRIMARY MEDICAL CARE: South Carolina
Population Group Listing

Population Group

Low Inc—Loris
County—Horry
Parts:
Floyd CCD
Longs CCD
Loris CCD
Low Inc—Marion/Mullins
County—Marion
Parts:
Marion CCD
Mullins CCD
Low Inc—North Charleston
County—Charleston
Parts:
C.T. 37
C.T. 41
C.T. 43–45
Low Inc—Oconee Co
County—Oconee
Parts:
Low Income
Low Inc—Peninsula Charleston
County—Charleston
Parts:
C.T. 4
C.T. 6–11
C.T. 13–14
Low Inc—Pickens
County—Pickens
Parts:
Low Income
Low Inc—Society Hill/E Chesterfield
County—Chesterfield
Parts:
Cheraw Division
Chesterfield Division
Patrick Division
County—Darlington
Parts:
Society Hill Division
Low Inc—South Rock Hill
County—York
Parts:
C.T. 601.01–601.02
C.T. 602–603
C.T. 604.01–604.02
C.T. 605.01–605.02
Low Inc—Western Orangeburg
County—Orangeburg
Parts:
Branchville Div
Cope Div
Neeses Div
North Div
Norway Div
Orangeburg Div
Orangeburg West Div
Springfield Div

PRIMARY MEDICAL CARE: South Carolina
Facility Listing

Facility Name

FCI Estil
County—Hampton
Low Co Health Care System
County—Allendale

PRIMARY MEDICAL CARE: South Dakota
County Listing

County Name

*Aurora

PRIMARY MEDICAL CARE: South Dakota
County Listing

County Name

Service Area: Corsica/Armour
Service Area: Wessington Springs
*Bennett
*Brookings
Service Area: Flandreau/Elkton
*Brown
Service Area: Dickey/Brown (ND/SD)
*Buffalo
Service Area: Wessington Springs
*Butte
Service Area: Newell
*Campbell
*Charles Mix
*Clark
*Corson
Service Area: Isabel
Service Area: Lemmon (SD/ND)
Service Area: McLaughlin
*Custer
Service Area: Hermosa Service Area
*Davison
Service Area: Corsica/Armour
*Day
*Deuel
*Dewey
Service Area: Eagle Butte
Service Area: Isabel
*Douglas
Service Area: Corsica/Armour
*Edmunds
*Fall River
*Faulk
*Grant
Service Area: Milbank
*Gregory
Service Area: Fairfax
*Haakon
*Hamlin
*Hanson
Service Area: Salem
*Harding
*Hyde
*Jackson
*Jerauld
Service Area: Wessington Springs
*Jones
*Kingsbury
Lincoln
*Lyman
*McCook
Service Area: Salem
*Meade
Service Area: Faith
*Mellette
*Miner
*Moody
Service Area: Flandreau/Elkton
*McPherson
Service Area: Leola
Pennington
Service Area: N. Rapid City
*Perkins
Service Area: Faith
Service Area: Lemmon (SD/ND)
*Potter
Service Area: Gettysburg/Agar
*Roberts
Service Area: Milbank
*Sanborn
Service Area: Wessington Springs
*Shannon
*Spink

PRIMARY MEDICAL CARE: South Dakota
County Listing

County Name

*Sully
Service Area: Gettysburg/Agar
*Todd
*Turner
*Union
Service Area: Beresford/Alcester
Service Area: Elk Point
*Ziebach
Service Area: Eagle Butte
Service Area: Faith
Service Area: Isabel

PRIMARY MEDICAL CARE: South Dakota
Service Area Listing

Service Area Name

Beresford/Alcester
County—Union
Parts:
Alcester Township
Alcester City
Beresford City
Big Springs Township
Emmet Township
Prairie Township
Virginia Township
Corsica/Armour
County—Aurora
Parts:
Aurora Township
Center Township
Stickney Town
Truro Township
Washington Township
County—Davison
Parts:
Baker Township
County—Douglas
Dickey/Brown (ND/SD)
County—Brown
Parts:
Allison Township
Frederick Town
Frederick Township
Greenfield Township
Liberty Township
Osceola Township
Palmyra Township
Richland Township
Savo Township
Eagle Butte
County—Dewey
Parts:
Eagle Butte City
South Dewey Unorg.
County—Ziebach
Parts:
Eagle Butte City
South Ziebach Unorg.
Elk Point
County—Union
Parts:
Brule Township
Elk Point Township
Elk Point City
Richland Unorg.
Fairfax
County—Gregory
Parts:
Bonesteel City
East Gregory Unorg.
Fairfax Town

PRIMARY MEDICAL CARE: South Dakota
Service Area Listing

Service Area Name

Fairfax Township
Pleasant Valley Township
Schriever Township
Southeast Gregory Unorg.
St. Charles Township
Star Valley Township
Faith
County—Meade
Parts:
Eagle Township
Faith City
Howard Township
North Meade Unorg.
Union Township
Upper Red Owl Township
County—Perkins
Parts:
Ada Township
Antelope Township
Beck Township
Brushy Township
Chance Township
Chaudoin Township
Duell Township
Englewood Township
Foster Township
Hall Township
Highland Township
Lone Tree Township
Maltby Township
Martin Township
Moreau Township
South Perkins Unorg.
Southwest Perkins Unorg.
Vickers Township
Vrooman Township
Wells Township
West Central Perkins Unorg.
West Perkins Unorg.
Wyandotte Township
County—Ziebach
Parts:
Dupree Unorg.
Dupree City
Flandreau/Elkton
County—Brookings
Parts:
Elkton Township
Elkton City
County—Moody
Gettysburg/Agar
County—Potter
County—Sully
Hermosa Service Area
County—Custer
Parts:
Buffalo Gap Town
East Custer Unorg.
Fairburn Town
Hermosa Town
Isabel
County—Corson
Parts:
Pleasant Ridge Township
County—Dewey
Parts:
Isabel City
North Dewey Unorg.
Timber Lake City
County—Ziebach
Parts:
North Ziebach Unorg.

PRIMARY MEDICAL CARE: South Dakota
Service Area Listing

Service Area Name

Lemmon (SD/ND)
County—Corson
Parts:
Custer Township
Delaney Township
Grand Valley Township
Lake Township
Lemon, No. 2 Unorg.
McIntosh City
Morristown Town
Pioneer Township
Prairie View Township
Riverside Township
Rolling Green Township
Sherman Township
Twin Butte Township
Watauga Township
West Corson Unorg.
County—Perkins
Parts:
Anderson Township
Barrett Township
Bison Town
Bison Township
Burdick Township
Cash Township
Castle Butte Township
Clark Township
De Witt Township
Duck Creek Unorg.
East Perkins Unorg.
Flat Creek Township
Fredlund Township
Glendo Township
Grand River Township
Horse Creek Township
Independence Unorg.
Lemmon City
Liberty Township
Lincoln Township
Lodgepole Township
Marshfield Township
Meadow Township
Plateau Township
Pleasant Valley Township
Rainbow Township
Rockford Township
Scotch Cap Township
Sidney Township
Strool Township
Trail Township
Vail Township
Viking Township
White Butte Township
White Hill Township
Wilson Township
Leola
County—McPherson
Parts:
Carl Township
Central McPherson Unorg.
Hoffman Township
Leola City
Long Lake Town
Wachter Township
Wacker Township
Weber Township
Wetonka Town
McLaughlin
County—Corson
Parts:
Cadillac Township

PRIMARY MEDICAL CARE: South Dakota
Service Area Listing

Service Area Name

Central Corson Unorg.
Lincoln Township
Mahto Township
McLaughlin City
Mission Township
Northeast Corson Unorg.
Ridgeland Township
Wakpala Township
Walker Township
Milbank
County—Grant
Parts:
Adams Township
Alban Township
Albee Town
Blooming Valley Township
Farmington Township
Georgia Township
Grant Center Township
Kilborn Township
La Bolt Town
Lura Township
Madison Township
Marvin Town
Mazeppa Township
Melrose Township
Milbank City
Osceola Township
Revillo Town
Stockholm Town
Stockholm Township
Strandburg Town
Troy Township
Twin Brooks Town
Twin Brooks Township
Vernon Township
County—Roberts
Parts:
Garfield Township
Geneseo Township
N. Rapid City
County—Pennington
Parts:
C.T. 101–105
C.T. 114–115
Newell
County—Butte
Parts:
East Butte Unorg.
Newell City
Union Township
Vale Township
Salem
County—Hanson
Parts:
Edgerton Township
Emery City
Farmer Town
Spring Lake Township
Taylor Township
County—McCook
Wessington Springs
County—Aurora
Parts:
Belford Township
Bristol Township
Cooper Township
Crystal Lake Township
Eureka Township
Firesteel Township
Gales Township
Hopper Township

PRIMARY MEDICAL CARE: South Dakota
Service Area Listing

Service Area Name

Lake Township
Palatine Township
Patten Township
Plankinton City
Plankinton Township
Pleasant Valley Township
Pleasant Lake Township
White Lake Township
White Lake City
Elvira Township
Parts:
Southeast Buffalo Unorg.
County—Jerauld
County—Sanborn
Parts:
Floyd Township
Jackson Township
Logan Township
Oneida Township
Silver Creek Township
Twin Lake Township
Union Township
Warren Township
Woonsocket Township
Woonsocket City

PRIMARY MEDICAL CARE: Tennessee
County Listing

County Name

Anderson
Service Area: Briceville/Lake City
*Bedford
Population Group: Low Inc—Bedford
*Bledsoe
Service Area: Dayton/Pikeville/Decatur
Blount
Population Group: Low Inc—Blount
*Campbell
Population Group: Low Inc—Campbell Co
Carter
Population Group: Low Inc—Carter
Cheatham
*Claiborne
Population Group: Low Inc—Claiborne Co
*Cocke
Population Group: Low Inc—Cocke Co
*Crockett
Population Group: Low Inc—Crockett Co
*Cumberland
Population Group: Low Inc—Cumberland
Davidson
Population Group: Low Inc—Waverly-Belmont
Population Group: Low Inc—E Nashville
Facility: Downtown Homeless Clinic
*Decatur
Dickson
Service Area: Vanleer/Shiloh
Fayette
*Gibson
Population Group: Low Inc—Gibson
*Giles
Population Group: Low Inc—Giles Co
Grainger
*Greene
Service Area: Baileyton
*Grundy
Hamilton
Service Area: Middle Valley
*Hancock
*Hardeman

PRIMARY MEDICAL CARE: Tennessee
County Listing

Population Group

Hawkins
*Haywood
*Henderson
*Hickman
*Jackson
Jefferson
  Population Group: Low Inc—Jefferson
*Johnson
Knox
  Service Area: Mechanicsville
*Lake
*Lauderdale
*Lawrence
  Population Group: Low Inc—Lawrence
*Lewis
  Population Group: Low Inc—Lewis
*Lincoln
  Population Group: Low Inc—Lincoln
*Macon
Madison
  Service Area: E Jackson
*Marshall
  Population Group: Low Inc—Marshall
*Meigs
  Service Area: Dayton/Pikeville/Decatur
Montgomery
  Service Area: Vanleer/Shiloh
*Moore
*Morgan
*Obion
  Service Area: Hornbeak/Samburg
*Perry
*Pickett
*Polk
  Population Group: Low Inc—Benton/Parkville
*Putnam
  Population Group: Low Inc—Putnam Co
*Rhea
  Service Area: Dayton/Pikeville/Decatur
*Roane
  Population Group: Low Inc—Roane Co
Robertson
  Population Group: Low Inc—Robertson
Rutherford
  Service Area: Eagleville
*Scott
  Population Group: Low Inc—Scott Co
Sevier
  Population Group: Low Inc—Sevier
Shelby
  Population Group: Low Inc—Whitehaven-Levi/NW Oakhaven
  Population Group: Low Inc—Millington
  Population Group: Low Inc—Frayser
  Population Group: Low Inc—NW Memphis
  Facility: Church Health Center
  Facility: FCI Memphis
  Facility: Hope Center
*Stewart
  Population Group: Low Inc—Stewart Co
Tipton
  Population Group: Low Inc—Tipton
*Trousdale
  Population Group: Low Inc—Trousddale
Unicoi
Union
*Van Buren
  Population Group: Low Inc—Van Buren Co
*Warren
  Population Group: Low Inc—Warrren Co
*Weakley

PRIMARY MEDICAL CARE: Tennessee
County Listing

Population Group

  Population Group: Low Inc—Dresden
*White
  Population Group: Low Inc—White

PRIMARY MEDICAL CARE: Tennessee
Service Area Listing

Service Area Name

Baileyton
  County—Greene
    Parts:
      Baileyton Division
      Jearoldstown Division
Briceville/Lake City
  County—Anderson
    Parts:
      Lake City West Division
      New River Division
Dayton/Pikeville/Decatur
  County—Bledsoe
  County—Meigs
  County—Rhea
E Jackson
  County—Madison
    Parts:
      C.T. 5
      C.T. 8–12
Eagleville
  County—Rutherford
    Parts:
      Eagleville Division
Hornbeak/Samburg
  County—Obion
    Parts:
      Dixie Division
      Elbridge-Cloverdale Division
      Hornbeak-Samburg Division
Mechanicsville
  County—Knox
    Parts:
      C.T. 1–7
      C.T. 11–14
      C.T. 20
      C.T. 28
Middle Valley
  County—Hamilton
    Parts:
      Middle Valley Division
      Sale Creek Division
      Soddy-Daisy Division
Vanleer/Shiloh
  County—Dickson
    Parts:
      Vanleer Division
  County—Montgomery
    Parts:
      Palmyra-Shiloh Division

PRIMARY MEDICAL CARE: Tennessee
Population Group Listing

Population Group

Low Inc—Bedford
  County—Bedford
    Parts:
      Low Income
Low Inc—Benton/Parkville
  County—Polk
    Parts:
      Benton CCD
      Parkville CCD
Low Inc—Blount

PRIMARY MEDICAL CARE: Tennessee
Population Group Listing

Population Group

  County—Blount
    Parts:
      Low Income
Low Inc—Campbell Co
  County—Campbell
    Parts:
      Low Income
Low Inc—Carter
  County—Carter
    Parts:
      Low Income
Low Inc—Claiborne Co
  County—Claiborne
    Parts:
      Low Income
Low Inc—Cocke Co
  County—Cocke
    Parts:
      Low Income
Low Inc—Crockett Co
  County—Crockett
    Parts:
      Low Income
Low Inc—Cumberland
  County—Cumberland
    Parts:
      Low Income
Low Inc—Dresden
  County—Weakley
    Parts:
      Chestnut Glade-Dukedom
      Dresden Division
      Gleason Division
      Palmersville Division
Low Inc—E Nashville
  County—Davidson
    Parts:
      C.T. 112–126
Low Inc—Frayser
  County—Shelby
    Parts:
      C.T. 99–100
      C.T. 101.10
      C.T. 101.20
      C.T. 102.10
      C.T. 102.20
      C.T. 103
Low Inc—Gibson
  County—Gibson
    Parts:
      Low Income
Low Inc—Giles Co
  County—Giles
    Parts:
      Low Income
Low Inc—Jefferson
  County—Jefferson
    Parts:
      Low Income
Low Inc—Lawrence
  County—Lawrence
    Parts:
      Low Income
Low Inc—Lewis
  County—Lewis
    Parts:
      Low Income
Low Inc—Lincoln
  County—Lincoln
    Parts:
      Low Income
Low Inc—Marshall

PRIMARY MEDICAL CARE: Tennessee
Population Group Listing

Population Group

County—Marshall
Parts:
Low Income
Low Inc—Millington
County—Shelby
Parts:
C.T. 202.10
C.T. 202.20
C.T. 203–204
Low Inc—NW Memphis
County—Shelby
Parts:
C.T. 1–10
C.T. 13–28
C.T. 30
C.T. 89–90
Low Inc—Putnam Co
County—Putnam
Parts:
Low Income
Low Inc—Roane Co
County—Roane
Parts:
Low Income
Low Inc—Robertson
County—Robertson
Parts:
Low Income
Low Inc—Scott Co
County—Scott
Parts:
Low Income
Low Inc—Sevier
County—Sevier
Parts:
Low Income
Low Inc—Stewart Co
County—Stewart
Parts:
Low Income
Low Inc—Tipton
County—Tipton
Parts:
Low Income
Low Inc—Trousddale
County—Trousdale
Parts:
Low Income
Low Inc—Van Buren Co
County—Van Buren
Parts:
Low Income
Low Inc—Warrren Co
County—Warren
Parts:
Low Income
Low Inc—Waverly-Belmont
County—Davidson
Parts:
C.T. 148
C.T. 160–163
C.T. 170–171
Low Inc—White
County—White
Parts:
Low Income
Low Inc—Whitehaven-Levi/NW Oakhaven
County—Shelby
Parts:
C.T. 104.10
C.T. 104.20
C.T. 105

PRIMARY MEDICAL CARE: Tennessee
Population Group Listing

Population Group

C.T. 220.10
C.T. 220.21–220.22
C.T. 221.11–221.12
C.T. 221.20
C.T. 221.30
C.T. 222.10
C.T. 222.20
C.T. 223.10
C.T. 223.20
C.T. 223.30
C.T. 224.10
C.T. 224.20

PRIMARY MEDICAL CARE: Tennessee
Facility Listing

Facility Name

Church Health Center
County—Shelby
Downtown Homeless Clinic
County—Davidson
FCI Memphis
County—Shelby
Hope Center
County—Shelby

PRIMARY MEDICAL CARE: Texas
County Listing

County Name

*Anderson
Facility: Beto Prs
Facility: Coffield Prs
Facility: Gurney Prs
Facility: Michael Prs
Facility: Powledge Prs
*Angelina
Facility: Diboll Prs
*Aransas
Archer
*Armstrong
*Atascosa
*Austin
*Bailey
*Bandera
Bastrop
*Baylor
Population Group: Low Inc—Baylor
*Bee g)
Facility: McConell Psn
Bexar
Service Area: North Central Bexar
Service Area: San Antonio (West Side)
Service Area: San Antonio (South Side)
Service Area: San Antonio (Eastside)
Service Area: San Antonio (Far East Side)
Facility: Dominguez Prs
*Blanco
*Borden
Bowie
Facility: Telford Prs
Brazoria
Facility: Ramsey I Prs
Facility: Ramsey II Prs
*Brewster
*Briscoe
*Brooks
*Burleson
*Burnet
Population Group: Low Inc—Burnet Co
Caldwell
Cameron (g)

PRIMARY MEDICAL CARE: Texas
County Listing

County Name

Facility: Port Isabel INS Health Facility
*Camp
Population Group: Low Inc—Camp
*Carson
*Chambers
*Cherokee
Facility: Skyview/Hodge Psn
*Cochran
*Coke
*Coleman
*Collingsworth
Comal
Population Group: Low Inc—Comal County
*Comanche
Population Group: Low Inc—Comanche
Coryell (g)
Facility: Gatesville Prison
Facility: Hughes Prs
Facility: Mountain View Prison
*Crane (g)
Facility: Tx Tech Univ Pc Clinics
*Crockett
*Culberson
Dallas
Service Area: Lisbon
Service Area: Simpson-Stuart
Service Area: South Dallas
Service Area: Trinity
Service Area: West Dallas
Facility: Hutchins Prs
Facility: Parkland Ambulatory Care Clinic
Facility: Parkland Internal Med Clinic
*Deaf Smith
*Delta
Denton
Population Group: Low Inc—N Denton
*Dickens
*Dimmit
Service Area: Dimmit-Zavala
*Donley
*Duval
*Eastland
El Paso
Service Area: Lower Valley—El Paso
Service Area: South El Paso
Service Area: Southeast El Paso
Facility: El Paso INS Health Facility
Facility: Tx Tech Med. Ambulatory Cl
*Falls
*Fannin (g)
Facility: Choice Moore Prs
Facility: Cole Prs
*Fisher
*Foard
Fort Bend
Facility: Jester I Prs
Facility: Jester II Prs
*Freestone
Facility: Boyd Prs
*Frio (g)
Facility: Briscoe Prs
*Gaines
Galveston
Service Area: Bolivar Penninsula
*Garza
*Glasscock
*Goliad
*Gonzales
Population Group: Low Inc—Gonzales Co
*Grimes (g)
Facility: Luther Prs
*Hall

PRIMARY MEDICAL CARE: Texas
County Listing

County Name

*Hansford
Hardin
Harris
Service Area: Acres Home
Service Area: Aldine
Service Area: Casa De Amigos
Service Area: East Central Houston
Service Area: Galena Park/Jacinto City
Service Area: Ripley
Service Area: Settegast
Service Area: South Central Houston
Facility: Joe Kegan Psn
Facility: Lychner Prs
*Hartley
*Henderson
Population Group: Low Inc—Henderson Co
Hidalgo (g)
Facility: Lopez Psn
Facility: Segovia Psn
*Hill
*Hockley
*Houston
Facility: Eastham Prs
*Hudspeth
*Irion
*Jackson
*Jasper
Facility: Goodman Prs
Jefferson
Facility: Gist Prs
Facility: Leblanc Prs
Facility: Stiles Prs
*Jim Hogg
Population Group: Low Inc—Jim Hogg
*Jim Wells
Johnson
*Jones
*Karnes (g)
Facility: Conanally Prison
*Kenedy
*Kent
*Kimble
*King
*Kinney
*La Salle
*Lamb
*Lampasas
*Lee
*Leon
Liberty
Facility: Henley Prs
Facility: Hightower Prs
Facility: Plane Prs
*Limestone
*Lipscomb
*Live Oak (g)
Facility: FCI Three Rivers
*Loving
Lubbock
Service Area: East Lubbock
*Lynn
*Madison (g)
Facility: Ferguson Prs
*Marion
*Mason
*Maverick
McLennan
Population Group: Low Inc—Mclennan
*McMullen
*Medina
*Menard
*Milam

PRIMARY MEDICAL CARE: Texas
County Listing

County Name

*Mills
*Mitchell
*Moore
Population Group: Low Inc—Moore Co
*Morris
*Motley
*Nacogdoches
Population Group: Low Inc—Nacogdoches Co
*Newton
Population Group: Low Inc—Newton
*Oldham
Orange
Population Group: Low Inc—Orange
*Palo Pinto
Population Group: Low Inc—Palo Pinto Co
*Panola
Parker
Population Group: Low Inc—Parker
*Parmer
*Polk (g)
Facility: Terrell Prison
*Presidio
*Rains
*Reagan
*Red River
*Reeves
*Refugio
*Roberts
*Robertson
*Runnels
*Rusk
*Sabine
*San Augustine
*San Jacinto
San Patricio
*San Saba
*Schleicher
*Shackelford
*Shelby
Population Group: Low Inc—Shelby Co
*Sherman
*Starr
*Stephens
*Sterling
*Swisher
Tarrant
Service Area: Diamond Hill
Service Area: Poly/Stop Six
*Terrell
*Terry
Tom Green
Population Group: Low Inc—Tom Green
Travis
Service Area: Dove Springs
Service Area: East Austin
Service Area: North West Service Area
Service Area: South Austin
*Trinity
*Tyler (g)
Facility: Lewis Prs
Upshur
*Upton
Population Group: Low Inc—Upton
*Uvalde
Population Group: Low Inc—Uvalde Co
*Val Verde
*Van Zandt
*Walker
Facility: Ellis I Prs
Facility: Holliday Prs
Facility: Wynne Prs

PRIMARY MEDICAL CARE: Texas
County Listing

County Name

Waller
*Ward
Webb
*Wheeler
Population Group: Low Inc—Wheeler Co
Wichita
Population Group: Low Inc—Wichita Co
*Willacy
Wilson
*Winkler
*Wise
*Wood
Facility: Johnston Prs
*Yoakum
*Zapata
*Zavala
Service Area: Dimmit-Zavala

PRIMARY MEDICAL CARE: Texas
Service Area Listing

Service Area Name

Acres Home
County—Harris
Parts:
C.T. 524
C.T. 525.02–525.04
C.T. 530.02
C.T. 531.01
C.T. 531.03
Aldine
County—Harris
Parts:
C.T. 222.01–222.02
C.T. 223.01–223.03
C.T. 224.01
C.T. 240.02
Bolivar Penninsula
County—Galveston
Parts:
C.T. 1254
Casa De Amigos
County—Harris
Parts:
C.T. 502
C.T. 503.01–503.02
C.T. 504
C.T. 505.01–505.02
C.T. 506.01–506.02
C.T. 507.01–507.02
C.T. 508
C.T. 509.02–509.03
C.T. 512
C.T. 514.01–514.02
C.T. 515.02
Diamond Hill
County—Tarrant
Parts:
C.T. 1002.01–1002.02
C.T. 1003–1004
C.T. 1008–1011
C.T. 1050.01
C.T. 1050.06
Dimmit-Zavala
County—Dimmit
County—Zavala
Dove Springs
County—Travis
Parts:
C.T. 24.11–24.13
East Austin
County—Travis

PRIMARY MEDICAL CARE: Texas
Service Area Listing

Population Group

Parts:
C.T. 4.02
C.T. 8.01–8.04
C.T. 9.01–9.02
C.T. 10
C.T. 18.11–18.12
C.T. 21.04–21.13
C.T. 22.01–22.02
C.T. 22.05

East Central Houston
County—Harris
Parts:
C.T. 201.01–201.02
C.T. 202.10
C.T. 202.20
C.T. 203.01–203.03
C.T. 204
C.T. 205.01
C.T. 205.03
C.T. 205.98
C.T. 206.01
C.T. 206.98
C.T. 207.03–207.04
C.T. 208.02–208.03
C.T. 209
C.T. 210.01
C.T. 214.01

East Lubbock
County—Lubbock
Parts:
C.T. 1
C.T. 2.01–2.02
C.T. 3.01–3.02
C.T. 6.03–6.06
C.T. 7–11
C.T. 13–14
C.T. 23–25

Galena Park/Jacinto City
County—Harris
Parts:
C.T. 211–212

Lisbon
County—Dallas
Parts:
C.T. 56–57
C.T. 59.01–59.02
C.T. 87.01
C.T. 87.03–87.05
C.T. 88.01–88.02

Lower Valley—El Paso
County—El Paso
Parts:
C.T. 35
C.T. 37.01–37.02
C.T. 38.01–38.02
C.T. 41.03–41.07
C.T. 42.01–42.02

North Central Bexar
County—Bexar
Parts:
C.T. 1801–1802
C.T. 1809.02
C.T. 1905–1907
C.T. 1910.01–1910.02

North West Service Area
County—Travis
Parts:
C.T. 17.26

Poly/Stop Six
County—Tarrant
Parts:
C.T. 1035
C.T. 1036.01
C.T. 1037.01–1037.02
C.T. 1046.01
C.T. 1046.04
C.T. 1062.01–1062.02
C.T. 1063

Ripley
County—Harris
Parts:
C.T. 300.22–300.23
C.T. 301.01–301.02
C.T. 302
C.T. 308.20
C.T. 309.01–309.03
C.T. 310–312
C.T. 313.01–313.02
C.T. 314.02
C.T. 319.01
C.T. 321.01–321.02

San Antonio (Eastside)
County—Bexar
Parts:
C.T. 1102–1103
C.T. 1110
C.T. 1301–1304
C.T. 1401

San Antonio (Far East Side)
County—Bexar
Parts:
C.T. 1305–1306
C.T. 1308–1313

San Antonio (South Side)
County—Bexar
Parts:
C.T. 1402–1412
C.T. 1416–1418
C.T. 1501–1522
C.T. 1609
C.T. 1610.85
C.T. 1611–1613
C.T. 1615.01–1615.02
C.T. 1618–1620

San Antonio (West Side)
County—Bexar
Parts:
C.T. 1105–1108
C.T. 1601–1606
C.T. 1607.85
C.T. 1616
C.T. 1701–1716
C.T. 1901–1902

Settegast
County—Harris
Parts:
C.T. 207.01–207.02
C.T. 208.01
C.T. 215.01–215.03
C.T. 216.01–216.02
C.T. 217.01–217.02
C.T. 218.03–218.04
C.T. 225.03–225.04
C.T. 227

Simpson-Stuart
County—Dallas
Parts:
C.T. 112–113
C.T. 114.01–114.02
C.T. 167.01
C.T. 169.01

South Austin
County—Travis
Parts:
C.T. 23.04
C.T. 23.10–23.12
C.T. 24.16

South Central Houston
County—Harris
Parts:
C.T. 318.02–318.03
C.T. 319.02
C.T. 325.01–325.02
C.T. 327.01–327.02
C.T. 328.01–328.03
C.T. 329.02–329.03
C.T. 339.03
C.T. 340
C.T. 342
C.T. 343.01–343.02

South Dallas
County—Dallas
Parts:
C.T. 25
C.T. 27.01–27.02
C.T. 28–29
C.T. 33–38
C.T. 39.01–39.02
C.T. 40
C.T. 93.03–93.04
C.T. 115
C.T. 116.01

South El Paso
County—El Paso
Parts:
C.T. 17–21
C.T. 28–29

Southeast El Paso
County—El Paso
Parts:
C.T. 39.01–39.03
C.T. 40.01–40.02
C.T. 103.08–103.10
C.T. 104.01–104.04
C.T. 105

Trinity
County—Dallas
Parts:
C.T. 41
C.T. 49
C.T. 54–55
C.T. 86.01–86.02
C.T. 89

West Dallas
County—Dallas
Parts:
C.T. 43
C.T. 101.01–101.02
C.T. 102–106

PRIMARY MEDICAL CARE: Texas
Population Group Listing

Population Group

Low Inc—Baylor 2
County—Baylor
Parts:
Low Income

Low Inc—Burnet Co
County—Burnet
Parts:
Low Income

Low Inc—Camp
County—Camp
Parts:
Low Income

PRIMARY MEDICAL CARE: Texas
Population Group Listing

Facility Name

Low Inc—Comal County
County—Comal
Parts:
Low Income
Low Inc—Comanche
County—Comanche
Parts:
Low Income
Low Inc—Gonzales Co
County—Gonzales
Parts:
Low Income
Low Inc—Henderson Co
County—Henderson
Parts:
Low Income
Low Inc—Jim Hogg
County—Jim Hogg
Parts:
Low Income
Low Inc—Mclennan
County—McLennan
Parts:
Low Income
Low Inc—Moore Co
County—Moore
Parts:
Low Income
Low Inc—N Denton
County—Denton
Parts:
Denton CCD
Pilot Point—Aubrey CCD
Sanger CCD
Low Inc—Nacogdoches Co
County—Nacogdoches
Parts:
Low Income
Low Inc—Newton
County—Newton
Parts:
Low Income
Low Inc—Orange
County—Orange
Parts:
Low Income
Low Inc—Palo Pinto Co
County—Palo Pinto
Parts:
Low Income
Low Inc—Parker
County—Parker
Parts:
Low Income
Low Inc—Shelby Co
County—Shelby
Parts:
Low Income
Low Inc—Tom Green
County—Tom Green
Parts:
Low Income
Low Inc—Upton
County—Upton
Parts:
Low Income
Low Inc—Uvalde Co
County—Uvalde
Parts:
Low Income
Low Inc—Wheeler Co
County—Wheeler

PRIMARY MEDICAL CARE: Texas
Population Group Listing

Facility Name

Parts:
Low Income
Low Inc—Wichita Co
County—Wichita
Parts:
Low Income

PRIMARY MEDICAL CARE: Texas
Facility Listing

Facility Name

Beto Prs
County—Anderson
Boyd Prs
County—Freestone
Briscoe Prs
County—Frio
Choice Moore Prs
County—Fannin
Coffield Prs
County—Anderson
Cole Prs
County—Fannin
Conanally Prison
County—Karnes
Diboll Prs
County—Angelina
Dominguez Prs
County—Bexar
Eastham Prs
County—Houston
El Paso INS Health Facility
County—El Paso
Ellis I Prs
County—Walker
Ferguson Prs
County—Madison
FCI Three Rivers
County—Live Oak
Gatesville Prison
County—Coryell
Gist Prs
County—Jefferson
Goodman Prs
County—Jasper
Gurney Prs
County—Anderson
Henley Prs
County—Liberty
Hightower Prs
County—Liberty
Holliday Prs
County—Walker
Hughes Prs
County—Coryell
Hutchins Prs
County—Dallas
Jester I Prs
County—Fort Bend
Jester II Prs
County—Fort Bend
Joe Kegan Psn
County—Harris
Johnston Prs
County—Wood
Leblanc Prs
County—Jefferson
Lewis Prs
County—Tyler
Lopez Psn
County—Hidalgo
Luther Prs

PRIMARY MEDICAL CARE: Texas
Facility Listing

Facility Name

County—Grimes
Lychner Prs
County—Harris
McConell Psn
County—Bee
Michael Prs
County—Anderson
Mountain View Prison
County—Coryell
Parkland Ambulatory Care Clinic
County—Dallas
Parkland Internal Med Clinic
County—Dallas
Plane Prs
County—Liberty
Port Isabel INS Health Facility
County—Cameron
Powledge Prs
County—Anderson
Ramsey I Prs
County—Brazoria
Ramsey II Prs
County—Brazoria
Segovia Psn
County—Hidalgo
Skyview/Hodge Psn
County—Cherokee
Stiles Prs
County—Jefferson
Telford Prs
County—Bowie
Terrell Prison
County—Polk
Tx Tech Med. Ambulatory Cl
County—El Paso
Tx Tech Univ Pc Clinics
County—Crane
Wynne Prs
County—Walker

PRIMARY MEDICAL CARE: Utah
County Listing

County Name

*Beaver
Population Group: Low Inc—Beaver Co
*Box Elder
Population Group: Low Inc—Box Elder
*Carbon
Population Group: Low Inc—Carbon County
*Daggett
Davis
Population Group: Low Inc—North Davis
Population Group: Low Inc—South Davis
*Duchesne
Population Group: Low Inc—Duchesne Co
*Emery
*Garfield
*Grand
*Iron
Population Group: Low Inc—Iron
*Juab
Population Group: Low Inc—Juab Co
*Kane
Service Area: Kanab/Fredonia (UT/AZ)
*Morgan
Population Group: Low Inc—Morgan
*Piute
*Rich
Population Group: Low Inc—Rich
Salt Lake

PRIMARY MEDICAL CARE: Utah
County Listing

County Name

Population Group: Low Inc—Salt Lake Co
Facility: Utah State Prison
*San Juan
*Sanpete
Population Group: Low Inc—Sanpete
Facility: Central Utah Corr Fac
*Sevier
*Summit
Service Area: Coalville/Kamas
*Tooele
*Uintah
Utah
Population Group: Low Inc—Utah
*Wasatch
Population Group: Low Inc—Wasatch Co
*Washington
Population Group: Low Inc—Washington
*Wayne
Weber
Population Group: Low Inc—Weber

PRIMARY MEDICAL CARE: Utah
Service Area Listing

Service Area Name

Coalville/Kamas
County—Summit
Parts:
Coalville Division
Kamas Division
Kanab/Fredonia (UT/AZ)
County—Kane
West Wendover

PRIMARY MEDICAL CARE: Utah
Population Group Listing

Population Group

Low Inc—Beaver Co
County—Beaver
Parts:
Low Income
Low Inc—Box Elder
County—Box Elder
Parts:
Low Income
Low Inc—Carbon County
County—Carbon
Parts:
Low Income
Low Inc—Duchesne Co
County—Duchesne
Parts:
Low Income
Low Inc—Iron
County—Iron
Parts:
Low Income
Low Inc—Juab Co
County—Juab
Parts:
Low Income
Low Inc—Millard
Parts:
Low Income
Low Inc—Morgan
County—Morgan
Parts:
Low Income
Low Inc—North Davis
County—Davis
Parts:

PRIMARY MEDICAL CARE: Utah
Population Group Listing

Population Group

C.T. 1252
C.T. 1253.01–1253.02
C.T. 1254.01–1254.02
C.T. 1255–1257
C.T. 1258.01–1258.02
C.T. 1259.03
C.T. 1260
C.T. 1261.04
Low Inc—Rich
County—Rich
Parts:
Low Income
Low Inc—Salt Lake Co
County—Salt Lake
Parts:
Low Income
Low Inc—Sanpete
County—Sanpete
Parts:
Low Income
Low Inc—South Davis
County—Davis
Parts:
C.T. 1266–1267
C.T. 1270.01–1270.02
Low Inc—Utah
County—Utah
Parts:
Low Income
Low Inc—Wasatch Co
County—Wasatch
Parts:
Low—Income
Low Inc—Washington
County—Washington
Parts:
Low—Income
Low Inc—Weber
County—Weber
Parts:
Low Income

PRIMARY MEDICAL CARE: Utah
Facility Listing

Facility Name

Central Utah Corr Fac
County—Sanpete
Utah State Prison
County—Salt Lake

PRIMARY MEDICAL CARE: Vermont
County Listing

County Name

*Addison
Service Area: Route 100
*Caledonia
Population Group: Low Inc—Hardwick
*Essex
Service Area: Island Pond
Service Area: Upper Connecticut Valley (NH/VT)
Franklin
Service Area: Richford-Enosburg
*Lamoille
Population Group: Low Inc—Hardwick
*Orange
Service Area: Chelsea
*Orleans
Service Area: Island Pond
Service Area: Richford-Enosburg

PRIMARY MEDICAL CARE: Vermont
County Listing

County Name

Population Group: Low Inc—Hardwick
Facility: Northern State Correctional Facility
*Rutland
Service Area: Black River Valley
Service Area: Route 100
*Washington
Service Area: Mad River Valley
Population Group: Low Inc—Hardwick
*Windsor
Service Area: Black River Valley
Service Area: Route 100

PRIMARY MEDICAL CARE: Vermont
Service Area Listing

Service Area Name

Black River Valley
County—Rutland
Parts:
Mount Holly Town
County—Windsor
Parts:
Cavendish Town
Ludlow Town
Plymouth Town
Reading Town
Chelsea
County—Orange
Parts:
Chelsea Town
Corinth Town
Strafford Town
Tunbridge Town
Vershire Town
Washington Town
Island Pond
County—Essex
Parts:
Avery's Gore
Brighton Town
Ferdinand Town
Lewis Town
Norton Town
Warner's Grant
Warren's Gore
County—Orleans
Parts:
Charleston Town
Morgan Town
Mad River Valley
County—Washington
Parts:
Fayston Town
Moretown Town
Waitsfield Town
Warren Town
Richford-Enosburg
County—Franklin
Parts:
Bakersfield Town
Berkshire Town
Enosburg Town
Fairfield Town
Franklin Town
Montgomery Town
Richford Town
Sheldon Town
County—Orleans
Parts:
Jay Town
Route 100
County—Addison

PRIMARY MEDICAL CARE: Vermont
Service Area Listing

Service Area Name

Parts:
Granville Town
Hancock Town
County—Rutland
Parts:
Pittsfield Town
County—Windsor
Parts:
Rochester Town
Stockbridge Town
Upper Connecticut Valley (NH/VT)
County—Essex
Parts:
Averill Town
Bloomfield Town
Brunswick Town
Canaan Town
Lemington Town
Maidstone Town

PRIMARY MEDICAL CARE: Vermont
Population Group Listing

Population Group

Low Inc—Hardwick
County—Caledonia
Parts:
Hardwick Town
Stannard Town
Walden Town
County—Lamoille
Parts:
Wolcott Town
County—Orleans
Parts:
Craftsbury Town
Greensboro Town
County—Washington
Parts:
Woodbury Town

PRIMARY MEDICAL CARE: Vermont
Facility Listing

Facility Name

Northern State Correctional Facility
County—Orleans

PRIMARY MEDICAL CARE: Virginia
County Listing

County Name

*Accomack
*Amelia
*Appomattox
Bedford
Service Area: Big Island
*Bland
Botetourt
Service Area: Northern Botetourt
*Brunswick
Service Area: Brunswick/La Crosse
*Buchanan
*Buckingham
Service Area: Buckingham/Cumberland
Campbell/Lynchburg
Service Area: Altavista/Chatham
Facility: Free Clinic Of Central Va
*Caroline
*Carroll
Service Area: Laurel Fork
Charles City
Population Group: Low Inc—Charles City Co
*Charlotte
Chesapeake
Service Area: South Norfolk
*Craig
*Cumberland
Service Area: Buckingham/Cumberland
*Dickenson
Dinwiddie/Petersburg
Service Area: Rowanty
Facility: FCI Petersburg
*Fluvanna
*Franklin
Population Group: Low Inc—Franklin Co
Goochland
Service Area: Goochland/Fife
*Grayson/Galax
Service Area: Trout Dale/Independence
Hanover
Service Area: Beaverdam/Montpelier
*Henry/Martinsville
Population Group: Low Inc—Martinsville
*Highland
Isle Of Wight
Service Area: Berlin-Ivor
King George
*Lee
*Louisa
Service Area: Beaverdam/Montpelier
*Lunenburg
*Mecklenburg
Service Area: Brunswick/La Crosse
Service Area: Chase City
Facility: Comm. Memorial HC—Primary Care Clinic
*Nelson
New Kent
Newport News
Service Area: Newport News
*Northampton
Population Group: Low Inc/MFW—Northampton Co
*Page
*Patrick
Pittsylvania/Danville
Service Area: Altavista/Chatham
Population Group: Low Inc—Danville
Portsmouth City
Population Group: Low Inc—Downtown Portsmouth
*Richmond
Richmond City
Service Area: East End Richmond
Service Area: Old South Richmond
Population Group: Homeless—Richmond City
Roanoke/Roanoke-Salem
Service Area: Northwest Roanoke
*Rockbridge/Buena Vista
Service Area: Big Island
*Russell
*Smyth
Service Area: Konnarock
Service Area: Saltville
*Southampton/Franklin
Service Area: Berlin-Ivor
Spotsylvania/Fredericksbg
Service Area: Beaverdam/Montpelier
Suffolk
Service Area: City Of Suffolk
*Surry
*Sussex
Population Group: Low Inc—Sussex
Washington/Bristol
Service Area: Mendota
Service Area: Saltville
*Westmoreland

PRIMARY MEDICAL CARE: Virginia
Service Area Listing

Service Area Name

Altavista/Chatham
County—Campbell/Lynchburg
Parts:
C.T. 204.98
C.T. 205–209
County—Pittsylvania/Danville
Parts:
C.T. 101–107
Beaverdam/Montpelier
County—Hanover
Parts:
C.T. 3201–3202
County—Louisa
Parts:
C.T. 9501
C.T. 9505
County—Spotsylvania/Fredericksbg
Parts:
C.T. 204.01
Berlin-Ivor
County—Isle Of Wight
Parts:
Hardy District
County—Southampton/Franklin
Parts:
Berlin And Ivor District
Big Island
County—Bedford
Parts:
Peaks District
County—Rockbridge/Buena Vista
Parts:
Natural Bridge District
Brunswick/La Crosse
County—Brunswick
County—Mecklenburg
Parts:
La Crosse District
Buckingham/Cumberland
County—Buckingham
County—Cumberland
Chase City
County—Mecklenburg
Parts:
Bluestone District
Boydton District
Buckhorn District
Chase City District
Clarksville District
City Of Suffolk
County—Suffolk
Parts:
C.T. 651
C.T. 653–655
C.T. 756
East End Richmond
County—Richmond City
Parts:
C.T. 106–111
C.T. 201–212
C.T. 402

PRIMARY MEDICAL CARE: Virginia
Service Area Listing

Service Area Name

Goochland/Fife
County—Goochland
Parts:
C.T. 4002–4005
Konnarock
County—Smyth
Parts:
C.T. 9907
Laurel Fork
Parts:
Laurel Fork District
Mendota
County—Washington/Bristol
Parts:
Tyler District
Newport News
County—Newport News
Parts:
C.T. 301–302
C.T. 302.99
C.T. 303.98
C.T. 304–306
C.T. 308–310
C.T. 313
Northern Botetourt
County—Botetourt
Parts:
C.T. 401–402
Northwest Roanoke
County—Roanoke/Roanoke-Salem
Parts:
C.T. 1–2
C.T. 7–10
C.T. 23
Old South Richmond
County—Richmond City
Parts:
C.T. 601–605
C.T. 607.98
C.T. 608.98
Rowanty
County—Dinwiddie/Petersburg
Parts:
Darvills District
Rowanty District
Sapony District
Saltville
County—Smyth
Parts:
North Fork District
Saltville District
County—Washington/Bristol
Parts:
Jefferson District
South Norfolk
County—Chesapeake
Parts:
C.T. 201–204
C.T. 205.01–205.02
C.T. 206–207
Trout Dale/Independence
County—Grayson/Galax
Parts:
Elk Creek District
Wilson Creek District

PRIMARY MEDICAL CARE: Virginia
Population Group Listing

Population Group

Homeless—Richmond City
County—Richmond City
Parts:
C.T. 301–306
C.T. 412–415
Low Inc—Charles City Co
County—Charles City
Parts:
Low Income
Low Inc—Danville
County—Pittsylvania/Danville
Parts:
C.T. 108.98
C.T. 109–111
C.T. 112.98
C.T. 113.98
C.T. 114
Danville City
Low Inc—Downtown Portsmouth
County—Portsmouth City
Parts:
C.T. 2105
C.T. 2107
C.T. 2110–2111
C.T. 2113–2114
C.T. 2117–2121
C.T. 2126
C.T. 2127.01–2127.02
Low Inc—Franklin Co
County—Franklin
Parts:
Low Income
Low Inc—Martinsville
County—Henry/Martinsville
Parts:
Henry Co
Martinsville City
Low Inc—Sussex
County—Sussex
Parts:
Low Income
Low Inc/MFW—Northampton Co
County—Northampton
Parts:
Low Income/MFW

PRIMARY MEDICAL CARE: Virginia
Facility Listing

Facility Name

Comm. Memorial HC—Primary Care Clinic
County—Mecklenburg
Free Clinic Of Central Va
County—Campbell/Lynchburg
FCI Petersburg
County—Dinwiddie/Petersburg

PRIMARY MEDICAL CARE: Washington
County Listing

County Name

*Adams
Population Group: Low Inc—Adams Co
Facility: Columbia Basin Health Association
Benton
Population Group: Low Inc/MFW—Benton Co
*Chelan
Population Group: MSFW—Chelan/Douglas
*Clallam
Service Area: Clallam Bay-Neah Bay
Population Group: Lower Elwha Indian Tribe (S)

PRIMARY MEDICAL CARE: Washington
County Listing

County Name

Facility: Clallam Bay Corrections Ctr
Clark
Population Group: Low Inc—C. Vancouver/Hazel Dell
Population Group: Low Inc—Camas
*Cowlitz
Population Group: Low Inc—Cowlitz Co
*Douglas
Population Group: MSFW—Chelan/Douglas
*Ferry
Population Group: American Indian—Colville Res
Franklin
Population Group: Low Inc/MFW—Franklin Co
Facility: Coyote Ridge Corr Inst
*Garfield
*Grant
Service Area: Central Grant Co
Service Area: Grand Coulee
Service Area: Royal City
*Grays Harbor
Service Area: Copalis Beach
Service Area: Mc Cleary-Elma
Service Area: Neilton
Service Area: Westport
Population Group: Low Inc—Aberdeen/Hoquiam
*Jefferson
Service Area: Clallam Bay-Neah Bay
Service Area: Quilcene Bay
Population Group: Low Inc—Discovery Bay/Oak Bay
King
Population Group: Low Inc/Homeless—S King Co
Kitsap
Population Group: Low Inc—Bremerton
*Kittitas
Service Area: Cle Elum
*Klickitat
Population Group: Low Inc/MFW—Klickitat Co
*Lewis
Service Area: Morton
Population Group: Low Inc—SW Lewis Co
*Lincoln
Population Group: Low Inc—Lincoln
*Mason (g)
Facility: Wa Corr/Reception Ctr
*Okanogan
Service Area: Grand Coulee
Service Area: South Okanogan County
Service Area: Twisp/Winthrop
Population Group: American Indian—Colville Res
Population Group: MSFW—C Okanogan Co
Population Group: MSFW—N Okanogan Co
*Pacific
Service Area: Raymond
*Pend Oreille
Pierce
Service Area: Longbranch
Population Group: Low Inc—Eastside Tacoma
Population Group: Low Inc—Lakewood (SW Pierce Co)
Facility: McNeil Island Corr. C.
*Skagit

PRIMARY MEDICAL CARE: Washington
County Listing

County Name

Service Area: Concrete
Population Group: Low Inc/MFW—West Skagit Co
*Skamania
Snohomish
Service Area: Darrington
Population Group: Low Inc/Homeless—Snohomish Co
Facility: Twin Rivers Corr C
Spokane
Service Area: Deer Park
Service Area: Rockford
Population Group: Homeless—City Of Spokane (S)
Population Group: Low Inc—Southwestern Spokane
Population Group: Low Inc—Eastern Spokane
*Stevens
Service Area: Chewelah
Service Area: Deer Park
Service Area: Northport
Population Group: Low Inc—Colville
Thurston
Population Group: Low Inc—Thurston South Div
Population Group: Low Inc—Downtown Olympia
*Wahkiakum
Population Group: Low Inc—Wahkiakum Co
*Walla Walla
Population Group: Low Inc/MFW—Walla Walla
Facility: Wa State Pen
Whatcom
Population Group: MSFW—Whatcom Co
*Whitman
Service Area: Rock Lake/La Crosse
Population Group: Low Inc—NE Whitman Co
Yakima
Population Group: MFW—Yakima Co

PRIMARY MEDICAL CARE: Washington
Service Area Listing

Service Area Name

Central Grant Co
County—Grant
Parts:
Ephrata-Soap Lake Division
George Division
Gloyd Division
Moses Lake Division
Quincy Division
Warden Division
Wilson Creek Division
Chewelah
County—Stevens
Parts:
Chewelah Division
Columbia Division
Springdale Division
Clallam Bay-Neah Bay
County—Clallam
Parts:
Clallam Bay-Neah Bay Division
Forks Division
County—Jefferson
Parts:
West End Division

PRIMARY MEDICAL CARE: Washington
Service Area Listing

Service Area Name

Cle Elum
County—Kittitas
Parts:
Cle Elum Division
Manastash Division
Concrete
County—Skagit
Parts:
Upper Skagit Division
Copalis Beach
County—Grays Harbor
Parts:
North Beach Division
Darrington
County—Snohomish
Parts:
Cascade Division
Deer Park
County—Spokane
Parts:
Colbert Division
Deer Park Division
County—Stevens
Parts:
Loon Lake Division
Grand Coulee
County—Grant
Parts:
Coulee City Division
Grand Coulee Division
County—Okanogan
Parts:
C.T. 9701
Longbranch
County—Pierce
Parts:
Lower Peninsula Division
Mc Cleary-Elma
County—Grays Harbor
Parts:
Elma Division
Malone-Porter Division
McCleary Division
Morton
County—Lewis
Parts:
Big Bottom Division
Mineral Division
Morton Division
Mossyrock Division
Neilton
County—Grays Harbor
Parts:
Humptulips Division
Lake Quinault Division
Northport
County—Stevens
Parts:
Kettle Falls Division
Quilcene Bay
County—Jefferson
Parts:
Quilcene Bay Division
Raymond
County—Pacific
Parts:
Raymond Division
Willapa Valley Division
Rock Lake/La Crosse
County—Whitman
Parts:
La Crosse Division

PRIMARY MEDICAL CARE: Washington
Service Area Listing

Service Area Name

Rock Lake Division
Rockford
County—Spokane
Parts:
Rockford Division
Royal City
County—Grant
Parts:
Southern Slopes Division
South Okanogan County
County—Okanogan
Parts:
Brewster-Wakefield Division
Twisp/Winthrop
County—Okanogan
Parts:
Early Winters Division
Methow Valley Division
Westport
County—Grays Harbor
Parts:
South Shore Division

PRIMARY MEDICAL CARE: Washington
Population Group Listing

Population Group

American Indian—Colville Res
County—Ferry
Parts:
Am In—Colville Res
County—Okanogan
Parts:
C.T. 9702–9710
Homeless—City Of Spokane (S)
County—Spokane
Parts:
C.T. 1–47
C.T. 105.01
C.T. 106–115
C.T. 117–131
C.T. 134.01–134.02
C.T. 136–137
Low Inc—Aberdeen/Hoquiam
County—Grays Harbor
Parts:
Aberdeen-Hoquiam CCD
North River CCD
Wishkah CCD
Wyhoochee CCD
Low Inc—Adams Co
County—Adams
Parts:
Low Income
Low Inc—Bremerton
County—Kitsap
Parts:
C.T. 801.01–801.02
C.T. 802–803
C.T. 805–807
C.T. 808.98
C.T. 809.98
C.T. 810–814
C.T. 814.99
C.T. 922–924
Low Inc—C. Vancouver/Hazel Dell
County—Clark
Parts:
C.T. 408.01
C.T. 409.03–409.04
C.T. 410.02–410.03
C.T. 410.05–410.07

PRIMARY MEDICAL CARE: Washington
Population Group Listing

Population Group

C.T. 411.05–411.06
C.T. 416
C.T. 417.03
C.T. 418–421
C.T. 423–429
Low Inc—Camas
County—Clark
Parts:
C.T. 405.02–405.03
C.T. 414–415
Low Inc—Colville
County—Stevens
Parts:
Low Income
Low Inc—Cowlitz Co
County—Cowlitz
Parts:
Low Income
Low Inc—Downtown Olympia
County—Thurston
Parts:
C.T. 101
C.T. 103
Low Inc—Eastern Spokane
County—Spokane
Parts:
C.T. 101
C.T. 132.01
Low Inc—Eastside Tacoma
County—Pierce
Parts:
C.T. 618–627
C.T. 628.01–628.02
C.T. 629–635
Low Inc—Lakewood (SW Pierce Co)
County—Pierce
Parts:
C.T. 714.03–714.05
C.T. 715.01
C.T. 715.03–715.04
C.T. 717.01–717.02
C.T. 718.02–718.04
C.T. 719.01–719.02
C.T. 720
C.T. 721.05–721.08
C.T. 723.06
C.T. 723.08
Low Inc—Lincoln
County—Lincoln
Parts:
Low Income
Low Inc—NE Whitman Co
County—Whitman
Parts:
Rosalia CCD
Steptoe CCD
Tekoa CCD
Low Inc—Southwestern Spokane
County—Spokane
Parts:
C.T. 104.01
C.T. 139
C.T. 140.01–140.02
C.T. 141–142
Low Inc—SW Lewis Co
County—Lewis
Parts:
Boistfort
Ethel
Jackson Praire
Olequa
Low Inc—Thurston South Div

PRIMARY MEDICAL CARE: Washington
Population Group Listing

Population Group

County—Thurston
Parts:
Low Income
Low Inc—Wahkiakum Co
County—Wahkiakum
Parts:
Low Income
Low Inc—Discovery Bay/Oak Bay
County—Jefferson
Parts:
Discovery Bay CCD
Oak Bay CCD
Low Inc/Homeless—S King Co
County—King
Parts:
C.T. 252–254
C.T. 259
C.T. 291
C.T. 292.01–292.02
C.T. 295.01–295.02
C.T. 296–297
C.T. 298.01
C.T. 305.01–305.02
C.T. 306–308
Low Inc/Homeless—Snohomish Co
County—Snohomish
Parts:
C.T 0419.02
C.T. 401.98
C.T. 402–408
C.T. 410–412
C.T. 414–415
C.T. 418.01
C.T. 418.03–418.04
C.T. 419.01
C.T. 510–512
C.T. 514–515
C.T. 517
C.T. 518.01–518.02
Low Inc/MFW—Benton Co
County—Benton
Parts:
Low Income
MFW
Low Inc/MFW—Franklin Co
County—Franklin
Parts:
Low Income
MFW
Low Inc/MFW—Klickitat Co
County—Klickitat
Parts:
Low Income/MFW
Low Inc/MFW—Walla Walla
County—Walla Walla
Parts:
Low Income
MFW
Low Inc/MFW—West Skagit Co
County—Skagit
Parts:
Anacortes CCD
Bayview CCD
Bow CCD
Burlington CCD
Cavanaugh CCD
Clear Lake CCD
Conway CCD
La Conner CCD
Lyman-Hamilton CCD
Mount Vernon CCD
Samish CCD

PRIMARY MEDICAL CARE: Washington
Population Group Listing

Population Group

Sedro-Woolley CCD
Lower Elwha Indian Tribe (S)
County—Clallam
Parts:
Agnew-Carlsborg CCD
Crescent CCD
Port Angeles CCD
Sequim CCD
MFW—Yakima Co
County—Yakima
Parts:
MFW
MSFW—C Okanogan Co
County—Okanogan
Parts:
Concully-Riverside CCD
Okanogan CCD
Omak CCD
MSFW—Chelan/Douglas
County—Chelan
Parts:
MSFW
County—Douglas
Parts:
MSFW
MSFW—N Okanogan Co
County—Okanogan
Parts:
Oroville CCD
Tonasket-Pine Creek CCD
MSFW—Whatcom Co
County—Whatcom
Parts:
MSFW

PRIMARY MEDICAL CARE: Washington
Facility Listing

Facility Name

Clallam Bay Corrections Ctr
County—Clallam
Columbia Basin Health Association
County—Adams
Coyote Ridge Corr Inst
County—Franklin
McNeil Island Corr. C.
County—Pierce
Twin Rivers Corr C
County—Snohomish
Wa Corr/Reception Ctr
County—Mason
Wa State Pen
County—Walla Walla

PRIMARY MEDICAL CARE: West Virginia
County Listing

County Name

*Barbour
Berkeley
Population Group: Low Inc/MFW—Shenandoah
*Boone
Service Area: McDowell
*Braxton
*Calhoun
*Clay
*Doddridge
Service Are: Doddridge/Salem
*Fayette
Service Area: New Haven
*Gilmer

PRIMARY MEDICAL CARE: West Virginia
County Listing

County Name

*Grant
Service Area: Mt Storm-Union District
*Greenbrier
Service Area: Greenbrier
Service Area: Rainelle
*Hampshire
Hancock
Population Group: Low Inc—East Liverpool
*Hardy
Service Area: Baker
*Harrison
Service Area: Doddridge/Salem
*Jackson
Jefferson
Population Group: Low Inc/MFW—Shenandoah
Kanawha
Service Area: Clendenin
*Lincoln
Marshall
Service Area: Cameron
*Mercer
Service Area: Matoaka
*Mingo
Service Area: Gilbert
Service Area: Kermit
*Monongalia
Service Area: Clay/Battelle (WV/PA)
*Monroe
*Morgan
Service Area: Paw Paw
*Nicholas
Service Area: Richwood
*Pendleton
*Preston
Service Area: Bruceton Mills
Service Area: Rowlesburg/Eglon
*Raleigh
Service Area: Northwest Raleigh
Facility: FCI Beckley
*Randolph
Service Area: Huttonsville
*Ritchie
*Roane
*Summers
*Taylor
*Tyler
*Upshur
Service Area: Rock Cave
Wayne
Service Area: Wayne/Fort Gay
*Webster
Service Area: Richwood
*Wetzel
Service Area: Clay/Battelle (WV/PA)
*Wirt
*Wyoming
Population Group: Low Inc—Wyoming

PRIMARY MEDICAL CARE: West Virginia
Service Area Listing

Service Area Name

Baker
County—Hardy
Parts:
Capon District
Lost River District
Bruceton Mills
County—Preston
Parts:
Grant District

PRIMARY MEDICAL CARE: West Virginia
Service Area Listing

Service Area Name

Cameron
County—Marshall
Parts:
C.T. 208
Clay/Battelle (WV/PA)
County—Monongalia
Parts:
C.T. 114
County—Wetzel
Parts:
C.T. 304
Clendenin
County—Kanawha
Parts:
C.T. 112
Doddridge/Salem
County—Doddridge
County—Harrison
Parts:
C.T. 316
Gilbert
County—Mingo
Parts:
Stafford District
Greenbrier
County—Greenbrier
Parts:
Anthony Creek District
Falling Spring District
Williamsburg District
Huttonsville
County—Randolph
Parts:
Huttonsville District
Middle Fork District
Mingo District
Valley Bend District
Kermit
County—Mingo
Parts:
Harvey District
Kermit District
Matoaka
County—Mercer
Parts:
C.T. 9509
C.T. 9516
McDowell
County—Boone
Parts:
District 2
District 1
Mt Storm-Union District
County—Grant
Parts:
Union District
New Haven
County—Fayette
Parts:
C.T. 210–211
Northwest Raleigh
County—Raleigh
Parts:
C.T. 111–112
Paw Paw
County—Morgan
Parts:
C.T. 9709–9710
Rainelle
County—Greenbrier
Parts:
Meadow Bluff District

PRIMARY MEDICAL CARE: West Virginia
Service Area Listing

Service Area Name

Richwood
County—Nicholas
Parts:
Beaver District
County—Webster
Parts:
Glade District
Rock Cave
County—Upshur
Parts:
Banks District
Meade District
Rowlesburg/Eglon
County—Preston
Parts:
Lyon District
Reno District
Union District
Wayne/Fort Gay
County—Wayne
Parts:
Butler District
Stonewall District
Union District

PRIMARY MEDICAL CARE: West Virginia
Population Group Listing

Population Group

Low Inc—East Liverpool
County—Hancock
Parts:
Grant District
Low Inc—Wyoming
County—Wyoming
Parts:
Low Income
Low Inc/MFW—Shenandoah
County—Berkeley
Parts:
Low Income/MFW
County—Jefferson
Parts:
Low Income/MFW

PRIMARY MEDICAL CARE: West Virginia
Facility Listing

Facility Name

FCI Beckley
County—Raleigh

PRIMARY MEDICAL CARE: Wisconsin
County Listing

County Name

*Adams (g)
Facility: FCI Oxford
*Ashland
Service Area: Bayfield
Population Group: Am In—Bad River Tribe
*Barron
Service Area: Chetek/Colfax
*Bayfield
Service Area: Bayfield
Service Area: Hayward/Radisson
Brown
Service Area: Pulaski
Population Group: Am In—Oneida Nation
Facility: Green Bay Maximum Security Inst
*Buffalo
Population Group: Low Inc—Durand

PRIMARY MEDICAL CARE: Wisconsin
County Listing

County Name

Population Group: Low Inc—Mondovi
*Burnett
Calumet
Service Area: Chilton/New Holstein/Brillion
*Clark
*Columbia
Population Group: Amer Ind—Ho-Chunk (S)
Population Group: Low Inc—Portage/Pardeeville
Facility: Columbia Maximum Security Inst
*Crawford
Population Group: Amer Ind/Ho-Chunk(S)
Population Group: Low Inc—Boscobel
Dane
Population Group: Amer Ind/Ho-Chunk(S)
*Dodge
Facility: Dodge Corr Inst
Facility: Fox Lake Medium Security Inst
Facility: Waupun Maximum Security Inst
*Door
Service Area: Sister Bay/Washington Island
Population Group: Low Inc—Sturgeon Bay
Douglas
Service Area: Minong/Solon Springs
*Dunn
Service Area: Chetek/Colfax
Population Group: Low Inc—Durand
Eau Claire
Population Group: Amer Ind/Ho-Chunk(S)
Population Group: Low Inc—Augusta/Osseo
*Florence
*Forest
*Grant
Population Group: Low Inc—Platteville/Cuba City
Population Group: Low Inc—Boscobel
Population Group: Low Inc—Lancaster/Fennimore
*Green
Service Area: Darlington/Shullsburg
*Green Lake
Service Area: Markesan/Kingston
*Iowa
Population Group: Low Inc—Platteville/Cuba City
*Iron
Population Group: Low Inc—Ironwood/Hurley (MI/WI)
*Jackson
Service Area: Galesville/Trempealeau
Population Group: Amer Ind/Ho-Chunk(S)
Population Group: Low Inc—Augusta/Osseo
*Juneau
Service Area: Hillsboro
Population Group: Amer Ind/Ho-Chunk(S)
Kenosha
Service Area: Kenosha
*Kewaunee
Service Area: Kewaunee City/Algoma
La Crosse
Service Area: Coon Valley/Chaseburg
Population Group: Amer Ind/Ho-Chunk(S)
*Lafayette
Service Area: Darlington/Shullsburg
Population Group: Low Inc—Platteville/Cuba City
*Langlade
Service Area: Elcho
Service Area: Mountain/White Lake
*Lincoln
Population Group: Low Inc—Tomahawk
Marathon
Service Area: Tigerton/Birnamwood
Population Group: Amer Ind—Ho-Chunk(S)
Population Group: Low Inc—City Of Wausau
*Marinette
Service Area: W. Marinette
Population Group: Low Inc—E Marinette/S Menominee (MI/WI
*Marquette
*Menominee
Population Group: Low Inc—Menominee Co
Milwaukee
Service Area: Capitol Drive (Milwaukee)
Service Area: Inner City West
Service Area: Inner City South
Service Area: Juneautown
Population Group: Low Inc—Inner City North (Milwaukee)
*Monroe
Service Area: Hillsboro
Service Area: Sparta
Population Group: Amer Ind/Ho-Chunk(S)
*Oconto
Service Area: Mountain/White Lake
Service Area: Oconto/Oconto Falls
Service Area: Pulaski
*Oneida
Service Area: Elcho
Population Group: Low Inc—Tomahawk
Outagamie
Service Area: Clintonville/Marion
Population Group: Am In—Oneida Nation
*Pepin
Population Group: Low Inc—Durand
Population Group: Low Inc—Mondovi
Pierce
Population Group: Low Inc—Durand
*Polk
Service Area: Frederic/Luck
*Price
Racine
Facility: Racine Medium Security Inst
*Richland
Service Area: Hillsboro
Service Area: Spring Green/Plain
Rock
Service Area: Central Beloit
*Rusk
Population Group: Low Inc—Rusk Co
*Sauk
Service Area: Hillsboro
Service Area: Spring Green/Plain
Population Group: Amer Ind/Ho-Chunk(S)
*Sawyer
Service Area: Hayward/Radisson
*Shawano
Service Area: Clintonville/Marion
Service Area: Oconto/Oconto Falls
Service Area: Pulaski
Service Area: Tigerton/Birnamwood
Population Group: Am In—Stockbridge-Munsee Tribe
Population Group: Amer Ind/Ho-Chunk(S)
Sheboygan
Facility: Kettle Moraine Medium Security Inst
*Taylor
*Trempealeau
Service Area: Galesville/Trempealeau
Population Group: Low Inc—Augusta/Osseo
*Vernon
Service Area: Coon Valley/Chaseburg
Service Area: Hillsboro
Population Group: Amer Ind/Ho-Chunk(S)
*Vilas
Service Area: Land O'Lakes/Presque Isle
*Washburn
Service Area: Hayward/Radisson
Service Area: Minong/Solon Springs
Population Group: Low Inc—Spooner/Shell Lake
*Waupaca
Service Area: Clintonville/Marion
Service Area: Tigerton/Birnamwood
*Waushara
Winnebago
Facility: Oshkosh Medium Security Inst
*Wood
Population Group: Amer Ind/Ho-Chunk(S)

PRIMARY MEDICAL CARE: Wisconsin
Service Area Listing

Service Area Name

Bayfield
County—Ashland
Parts:
La Pointe Town
County—Bayfield
Parts:
Bayfield City
Bayfield Town
Bayview Town
Bell Town
Clover Town
Russell Town
Capitol Drive (Milwaukee)
County—Milwaukee
Parts:
C.T. 19–29
C.T. 31
C.T. 36
C.T. 38–49
C.T. 60–61
C.T. 63–65
Central Beloit
County—Rock
Parts:
C.T. 15–19
Chetek/Colfax
County—Barron
Parts:
Arland Town
Chetek City
Chetek Town
Dallas Village
Dallas Town
Dovre Town
Maple Grove Town
Prairie Farm Village
Prairie Lake Town
Prairie Farm Town
Sioux Creek Town
Sumner Town
Turtle Lake Town
Turtle Lake Village
Vance Creek Town
County—Dunn

PRIMARY MEDICAL CARE: Wisconsin
Service Area Listing

Service Area Name

Parts:
Boyceville Village
Colfax Village
Colfax Town
Downing Village
Grant Town
Hay River Town
Knapp Village
New Haven Town
Otter Creek Town
Ridgeland Village
Sand Creek Town
Sheridan Town
Sherman Town
Stanton Town
Tainter Town
Tiffany Town
Wheeler Village
Wilson Town
Chilton/New Holstein/Brillion
County—Calumet
Parts:
Brillion City
Brillion Town
Brothertown Town
Charlestown Town
Chilton City
Chilton Town
Hilbert Village
Kiel City
Kiel City
New Holstein City
New Holstein Town
Potter Village
Rantoul Town
Stockbridge Town
Stockbridge Village
Woodville Town
Clintonville/Marion
County—Outagamie
Parts:
Bear Creek Village
Deer Creek Town
Maine Town
County—Shawano
Parts:
Grant Town
Pella Town
County—Waupaca
Parts:
Bear Creek Town
Clintonville City
Dupont Town
Embarrass Village
Larrabee Town
Marion City
Matteson Town
Union Town
Coon Valley/Chaseburg
County—La Crosse
Parts:
Washington Town
County—Vernon
Parts:
Chaseburg Village
Christiana Town
Coon Town
Coon Valley Village
Hamburg Town
Westby City
Darlington/Shullsburg
County—Green
Parts:
Adams Town
York Town
County—Lafayette
Parts:
Argyle Village
Argyle Town
Blanchard Town
Blanchardville Village
Darlington City
Darlington Town
Fayette Town
Gratiot Village
Gratiot Town
Kendall Town
Lamont Town
Monticello Town
Seymour Town
Shullsburg City
Shullsburg Town
South Wayne Village
Wayne Town
White Oak Springs Town
Willow Springs Town
Wiota Town
Elcho
County—Langlade
Parts:
Ainsworth Town
Elcho Town
Parrish Town
Summit Town
Upham Town
County—Oneida
Parts:
Enterprise Town
Schoepke Town
Frederic/Luck
County—Polk
Parts:
Bone Lake Town
Clam Falls Town
Frederic Village
Georgetown Town
Laketown Town
Lorain Town
Luck Town
Luck Village
McKinley Town
West Sweden Town
Galesville/Trempealeau
County—Jackson
Parts:
Melrose Town
Melrose Village
North Bend Town
County—Trempealeau
Parts:
Arcadia City
Arcadia Town
Caledonia Town
Dodge Town
Ettrick Town
Ettrick Village
Gale Town
Galesville City
Trempealeau Town
Trempealeau Village
Hayward/Radisson
County—Bayfield
Parts:
Barnes Town
Cable Town
Drummond Town
Grand View Town
Namakagon Town
County—Sawyer
Parts:
Bass Lake Town
Couderay Village
Couderay Town
Draper Town
Edgewater Town
Exeland Village
Hayward City
Hayward Town
Hunter Town
Lenroot Town
Meadowbrook Town
Meteor Town
Ojibwa Town
Radisson Village
Radisson Town
Round Lake Town
Sand Lake Town
Spider Lake Town
Weirgor Town
Winter Village
Winter Town
County—Washburn
Parts:
Bass Lake Town
Stinnett Town
Stone Lake Town
Hillsboro
County—Juneau
Parts:
Union Center Village
Wonewoc Village
Wonewoc Town
County—Monroe
Parts:
Glendale Town
Kendall Village
Sheldon Town
Wellington Town
County—Richland
Parts:
Bloom Town
Cazenovia Village
Henrietta Town
Westford Town
Yuba Village
County—Sauk
Parts:
Woodland Town
County—Vernon
Parts:
Forest Town
Greenwood Town
Hillsboro City
Hillsboro Town
Ontario Village
Union Town
Whitestown Town
Inner City South
County—Milwaukee
Parts:
C.T. 155–159
C.T. 162–169
C.T. 174–177
Inner City West
County—Milwaukee
Parts:

PRIMARY MEDICAL CARE: Wisconsin
Service Area Listing

Service Area Name

C.T. 62
C.T. 87–90
C.T. 96–100
C.T. 119–123
C.T. 133–138
C.T. 148–149
Juneautown
County—Milwaukee
Parts:
C.T. 108
C.T. 110–113
Kenosha
County—Kenosha
Parts:
C.T. 7–12
C.T. 16
Kewaunee City/Algoma
County—Kewaunee
Parts:
Ahnapee Town
Algoma City
Carlton Town
Casco Town
Casco Village
Kewaunee City
Lincoln Town
Pierce Town
West Kewaunee Town
Land O'Lakes/Presque Isle
County—Vilas
Parts:
Land O'Lakes Town
Presque Isle Town
Winchester Town
Markesan/Kingston
County—Green Lake
Parts:
Kingston Town
Kingston Village
Mackford Town
Manchester Town
Markesan City
Marquette Town
Marquette Village
Minong/Solon Springs
County—Douglas
Parts:
Bennett Town
Dairyland Town
Gordon Town
Highland Town
Oakland Town
Solon Springs Village
Solon Springs Town
Wascott Town
County—Washburn
Parts:
Brooklyn Town
Chicog Town
Frog Creek Town
Gull Lake Town
Minong Village
Minong Town
Mountain/White Lake
County—Langlade
Parts:
Evergreen Town
Langlade Town
White Lake Village
Wolf River Town
County—Oconto
Parts:

PRIMARY MEDICAL CARE: Wisconsin
Service Area Listing

Service Area Name

Armstrong Town
Bagley Town
Brazeau Town
Breed Town
Doty Town
Lakewood Town
Riverview Town
Townsend Town
Oconto/Oconto Falls
County—Oconto
Parts:
Abrams Town
Gillett City
Gillett Town
How Town
Lena Town
Lena Village
Little River Town
Maple Valley Town
Morgan Town
Oconto City
Oconto Falls City
Oconto Falls Town
Oconto Town
Pensaukee Town
Spruce Town
Stiles Town
Suring Village
Underhill Town
County—Shawano
Parts:
Green Valley Town
Pulaski
County—Brown
Parts:
Pittsfield Town
Pulaski Village
County—Oconto
Parts:
Chase Town
County—Shawano
Parts:
Angelica Town
Maple Grove Town
Sister Bay/Washington Island
County—Door
Parts:
Baileys Harbor Town
Ephraim Village
Gibraltar Town
Liberty Grove Town
Sister Bay Village
Washington Town
Sparta
County—Monroe
Parts:
Angelo Town
Cashton Village
Jefferson Town
Lafayette Town
Leon Town
Little Falls Town
Melvina Village
New Lyme Town
Norwalk Village
Portland Town
Ridgeville Town
Sparta Town
Sparta City
Wells Town
Spring Green/Plain
County—Richland

PRIMARY MEDICAL CARE: Wisconsin
Service Area Listing

Service Area Name

Parts:
Buena Vista Town
Lone Rock Village
County—Sauk
Parts:
Bear Creek Town
Franklin Town
Honey Creek Town
Plain Village
Spring Green Village
Spring Green Town
Troy Town
Tigerton/Birnamwood
County—Marathon
Parts:
Elderon Town
Elderon Village
Franzen Town
Hatley Village
Norrie Town
Plover Town
County—Shawano
Parts:
Almon Town
Aniwa Village
Aniwa Town
Birnamwood Village
Birnamwood Town
Bowler Village
Eland Village
Fairbanks Town
Germania Town
Hutchins Town
Mattoon Village
Morris Town
Tigerton Village
Wittenberg Village
Wittenberg Town
County—Waupaca
Parts:
Big Falls Village
Harrison Town
Wyoming Town
W. Marinette
County—Marinette
Parts:
Amberg Town
Athelstane Town
Beaver Town
Beecher Town
Coleman Village
Crivitz Village
Dunbar Town
Goodman Town
Lake Town
Middle Inlet Town
Niagara Town
Pembine Town
Pound Village
Pound Town
Silver Cliff Town
Stephenson Town
Wausaukee Village
Wausaukee Town

PRIMARY MEDICAL CARE: Wisconsin
Population Group Listing

Population Group

Am In—Bad River Tribe
County—Ashland
Parts:

PRIMARY MEDICAL CARE: Wisconsin
Population Group Listing

Population Group

Sanborn Town
Am In—Oneida Nation
County—Brown
Parts:
Hobart Town
County—Outagamie
Parts:
Oneida Town
Am In—Stockbridge-Munsee Tribe
County—Shawano
Parts:
Bartelme Town
Red Springs Town
Amer Ind—Ho-Chunk (S)
County—Columbia
Parts:
Arlington Town
Arlington Villabe
Columbus City
Columbus Town
Hampden Town
Leeds Town
Lodi City
Lodi Town
Newport Town
West Point Town
Wisconsin Dells City
Amer Ind—Ho-Chunk(S)
County—Marathon
Parts:
C.T. 3
C.T. 8–10
C.T. 11.02–11.04
C.T. 12.01–12.02
C.T. 13–23
Amer Ind/Ho-Chunk(S)
County—Crawford
Parts:
Bell Center Village
Bridgeport Town
Clayton Town
De Soto Villabe
Eastman Town
Eastman Village
Ferryville Village
Freeman Town
Gays Mills Village
Lynxville Village
Mount Steriling Village
Prairie Du Chien City
Prairie Du Chien Town
Seneca Town
Soldiers Grove Village
Utica Town
Amer Ind/Ho-Chunk(S)
County—Dane
Parts:
Dane County
Amer Ind/Ho-Chunk(S)
County—Eau Claire
Parts:
Altoona City
Brunswick Town
Drammen Town
Eau Claire City
Fall Creek Village
Lincoln Town
Ludington Town
Pleasant Valley Town
Seymour Town
Union Town
Washington Town

PRIMARY MEDICAL CARE: Wisconsin
Population Group Listing

Population Group

Wilson Town
Amer Ind/Ho-Chunk(S)
County—Jackson
Parts:
Adams Town
Albion Town
Alma Center Village
Alma Town
Bear Bluff Town
Black River Fall Town
Brockway Town
City Point Town
Curran Town
Franklin Town
Garden Valley Town
Hixton Town
Hixton Village
Irving Town
Knapp Town
Komensky Town
Manchester Town
Merrillan Village
Millston Town
Springfield Town
Taylor Village
Amer Ind/Ho-Chunk(S)
County—Juneau
Parts:
Armenia Town
Camp Douglas Village
Clearfield Town
Cutler Town
Elroy City
Finley Town
Fountain Town
Germantown Town
Hustler Village
Kildare Town
Kingston Town
Lemonweir Town
Lindina Town
Lisbon Town
Lyndon Town
Lyndon Station Village
Marion Town
Mauston City
Necedah Town
Necedah Village
New Lisbon City
Orange Town
Plymouth Town
Seven Mile Creek Town
Summit Town
Amer Ind/Ho-Chunk(S)
County—La Crosse
Parts:
Bangor Town
Bangor Village
Barre Town
Burns Town
Campbell Town
Farmington Town
Greenfield Town
Hamilton Town
Holland Town
Holmen Village
La Crosse City
Medary Town
Onalaska City
Onalaska Town
Rockland Village
Shelby Town

PRIMARY MEDICAL CARE: Wisconsin
Population Group Listing

Population Group

West Salem Village
Amer Ind/Ho-Chunk(S)
County—Monroe
Parts:
Adrian Town
Byron Town
Clifton Town
Grant Town
Greenfield Town
La Grange Town
Lincoln Town
Oakdale Town
Oakdale Village
Scott Town
Tomah City
Tomah Town
Warrens Village
Wilton Town
Wilton Village
Wyeville Village
Amer Ind/Ho-Chunk(S)
County—Sauk
Parts:
Baraboo City
Baraboo Town
Cazenovia Village
Dellona Town
Delton Town
Excelsior Town
Fairfield Town
Freedom Town
Greenfield Town
Ironton Town
Ironton Village
La Valle Village
La Valle Town
Lake Delton Village
Lime Ridge Village
Loganville Village
Merrimac Town
Merrimac Village
North Freedom Village
Prairie Du Sac Town
Prairie Du Sac Village
Reedsburg City
Reedsburg Town
Rock Springs Village
Sauk City Village
Sumpter Town
Washington Town
West Baraboo Village
Westfield Town
Winfield Town
Wisconsin Dells City
Amer Ind/Ho-Chunk(S)
County—Shawano
Parts:
Belle Plaine Town
Bonduel Village
Cecil Village
Gresham Village
Hartland Town
Herman Town
Lessor Town
Navarino Town
Richmond Town
Seneca Town
Shawano City
Washington Town
Waukechon Town
Westcott Town
Amer Ind/Ho-Chunk(S)

PRIMARY MEDICAL CARE: Wisconsin
Population Group Listing

Population Group

County—Vernon
Parts:
Bergen Town
Clinton Town
De Soto Village
Franklin Town
Genoa Town
Genoa Village
Harmony Town
Jefferson Town
Kickapoo Town
La Farge Village
Liberty Town
Readstown Village
Stark Town
Sterling Town
Stoddard Village
Viola Village
Viroqua City
Viroqua Town
Webster Town
Wheatland Town
Amer Ind/Ho-Chunk(S)
County—Wood
Parts:
Wood County
Low Inc—Augusta/Osseo
County—Eau Claire
Parts:
Augusta City
Bridge Creek Town
Clear Creek Town
Fairchild Town
Fairchild Vil
Otter Creek Town
County—Jackson
Parts:
Cleveland Town
Garfield Town
Northfield Town
County—Trempealeau
Parts:
Hale Town
Osseo City
Strum Vil
Sumner Town
Unity Town
Low Inc—Boscobel
County—Crawford
Parts:
Haney Town
Marietta Town
Scott Town
Steuben Vil
Wauzeka Town
Wauzeka Vil
County—Grant
Parts:
Bagley Vil
Blue River Vil
Boscobel City
Boscobel Town
Castle Rock Town
Hickory Grove Town
Marion Town
Millville Town
Mount Hope Town
Mount Ida Town
Muscoda Town
Muscoda Vil
Patch Grove Vil
Patch Grove Town

PRIMARY MEDICAL CARE: Wisconsin
Population Group Listing

Population Group

Watterstown Town
Woodman Town
Woodman Vil
Wyalusing Town
Low Inc—City Of Wausau
County—Marathon
Parts:
C.T. 1–2
C.T. 4–5
C.T. 6.01–6.02
C.T. 7
Low Inc—Durand
County—Buffalo
Parts:
Maxville Twn
Nelson Twn
Nelson Vil
County—Dunn
Parts:
Dunn Twn
Eau Galle Twn
Peru Twn
Rock Creek Twn
Spring Brook Twn
Weston Twn
County—Pepin
Parts:
Durand City
Durand Twn
Frankfort Twn
Lima Twn
Pepin Twn
Pepin Vil
Stockholm Vil
Stockholm Twn
Waterville Twn
Waubeek Twn
County—Pierce
Parts:
El Paso Twn
Elmwood Vil
Gilman Twn
Maiden Rock Twn
Maiden Rock Vil
Plum City Vil
Rock Elm Twn
Salem Twn
Spring Lake Twn
Spring Valley Vil
Union Twn
Low Inc—E Marinette/S Menominee (MI/WI
County—Marinette
Parts:
Grover Town
Marinette City
Peshtigo City
Pestigo Town
Porterfield Town
Wagner Town
Low Inc—Inner City North (Milwaukee)
County—Milwaukee
Parts:
C.T. 44
C.T. 66–72
C.T. 79–86
C.T. 101–107
C.T. 114–118
C.T. 139–142
C.T. 145–147
C.T. 151
Low Inc—Ironwood/Hurley (MI/WI)
County—Iron

PRIMARY MEDICAL CARE: Wisconsin
Population Group Listing

Population Group

Parts:
Anderson Town
Carey Town
Gurney Town
Hurley City
Kimball Town
Knight Town
Mercer Town
Montreal City
Oma Town
Pence Town
Saxon Town
Low Inc—Lancaster/Fennimore
County—Grant
Parts:
Beetown Town
Bloomington Town
Bloomington Vil
Cassville Vil
Cassville Town
Fennimore Town
Fennimore City
Glen Haven Town
Lancaster City
Liberty Town
Little Grant Town
Montfort Vil
North Lancaster Town
Potosi Town
Potosi Vil
South Lancaster Town
Waterloo Town
Wingville Town
Low Inc—Menominee Co
County—Menominee
Parts:
Low Income
Low Inc—Mondovi
County—Buffalo
Parts:
Alma City
Alma Town
Belvidere Town
Buffalo City
Canton Town
Cochrane Vil
Dover Town
Gilmanton Town
Lincoln Town
Modena Town
Mondovi Town
Mondovi City
Naples Town
County—Pepin
Parts:
Albany Town
Low Inc—Platteville/Cuba City
County—Grant
Parts:
Clifton Town
Cuba City City
Dickeyville Village
Ellenboro Town
Harrison Town
Hazel Green Town
Hazel Green Village
Jamestown Town
Lima Town
Livingston Village
Paris Town
Platteville City
Platteville Town

PRIMARY MEDICAL CARE: Wisconsin
Population Group Listing

Population Group

Smelser Town
County—Iowa
Parts:
Mifflin Town
Rewey Vil
County—Lafayette
Parts:
Belmont Town
Belmont Vil
Benton Town
Benton Vil
Elk Grove Town
New Diggings Town
Low Inc—Portage/Pardeeville
County—Columbia
Parts:
Caledonia Twn
Cambria Vil
Courtland Twn
Dekorra Twn
Doylestown Vil
Fall River Vil
Fort Winnebago Twn
Fountain Prairie Twn
Friesland Vil
Lewiston Twn
Lowville Twn
Marcellon Twn
Otsego Twn
Pacific Twn
Pardeeville Vil
Portage City
Poynette Vil
Randolph Twn
Randolph Vil
Rio Vil
Scott Twn
Springvale Twn
Wyocena Vil
Wyocena Twn
Low Inc—Rusk Co
County—Rusk
Parts:
Low Income
Low Inc—Spooner/Shell Lake
County—Washburn
Parts:
Barronett Town
Bashaw Town
Beaver Brook Town
Birchwood Town
Birchwood Vil
Casey Town
Crystal Town
Evergreen Town
Long Lake Town
Madge Town
Sarona Town
Shell Lake City
Spooner City
Spooner Town
Springbrook Town
Trego Town
Low Inc—Sturgeon Bay
County—Door
Parts:
Brussels Twn
Claybanks Twn
Egg Harbor Twn
Egg Harbor Vil
Forestville Twn
Forestville Vil

PRIMARY MEDICAL CARE: Wisconsin
Population Group Listing

Population Group

Gardner Twn
Jacksonport Twn
Nasewaupee Twn
Sevastopol Twn
Sturgeon Bay City
Sturgeon Bay Twn
Union Twn
Low Inc—Tomahawk
County—Lincoln
Parts:
Bradley Town
Harrison Town
King Town
Skanawan Town
Somo Town
Tomahawk City
Tomahawk Town
Wilson Town
County—Oneida
Parts:
Little Rice Town
Lynne Town
Nokomis Town

PRIMARY MEDICAL CARE: Wisconsin
Facility Listing

Facility Name

Columbia Maximum Security Inst
County—Columbia
Dodge Corr Inst
County—Dodge
Fox Lake Medium Security Inst
County—Dodge
FCI Oxford
County—Adams
Green Bay Maximum Security Inst
County—Brown
Kettle Moraine Medium Security Inst
County—Sheboygan
Oshkosh Medium Security Inst
County—Winnebago
Racine Medium Security Inst
County—Racine
Waupun Maximum Security Inst
County—Dodge

PRIMARY MEDICAL CARE: Wyoming
County Listing

County Name

*Big Horn
*Campbell
Service Area: Wright
*Carbon (g)
Facility: Wyoming State Penitentiary
*Converse
*Crook
*Fremont
Service Area: Dubois
Service Area: Sweetwater
*Hot Springs
Laramie
Service Area: Pine Bluffs
*Lincoln
Service Area: Kemmerer/Cokeville
Natrona
Service Area: Midwest/Edgerton
Population Group: Low Income—Casper
*Niobrara
*Park
Service Area: Gardiner/Yellowstone (MT/WY)

PRIMARY MEDICAL CARE: Wyoming
County Listing

County Name

*Platte
Service Area: Chugwater
Service Area: Glendo
Service Area: Guernsey
*Sublette
*Sweetwater
*Teton
Service Area: Gardiner/Yellowstone (MT/WY)
*Uinta
*Washakie

PRIMARY MEDICAL CARE: Wyoming
Service Area Listing

Service Area Name

Chugwater
County—Platte
Parts:
Chugwater Division
Dubois
County—Fremont
Parts:
Dubois Division
Gardiner/Yellowstone (MT/WY)
County—Park
Parts:
Yellowstone National Park Divisi
County—Teton
Parts:
Yellowstone National Park Divisi
Glendo
County—Platte
Parts:
Glendo Division
Guernsey
County—Platte
Parts:
Guernsey Division
Kemmerer/Cokeville
County—Lincoln
Parts:
Kemmerer East Division
Kemmerer West Division
Midwest/Edgerton
County—Natrona
Parts:
Casper North Division
Pine Bluffs
County—Laramie
Parts:
Pine Bluffs Division
Sweetwater
County—Fremont
Parts:
Sweetwater Division
Wright
County—Campbell
Parts:
Gillette South Division

PRIMARY MEDICAL CARE: Wyoming
Population Group Listing

Population Group

Low Income—Casper
County—Natrona
Parts:
C.T. 1–2
C.T. 4
C.T. 7–8
C.T. 8
C.T. 11–12

PRIMARY MEDICAL CARE: Wyoming
Facility Listing

Facility Name
Wyoming State Penitentiary 3
County—Carbon

PRIMARY MEDICAL CARE: American Samoa
County Listing

County Name
*Eastern
Service Area: Terr. Of American Samoa
*Manua
Service Area: Terr. Of American Samoa
*Rose Island
Service Area: Terr. Of American Samoa
*Swains Island
Service Area: Terr. Of American Samoa
*Western
Service Area: Terr. Of American Samoa

PRIMARY MEDICAL CARE: American Samoa
Service Area Listing

Service Area Name
Terr. Of American Samoa
County—Eastern
County—Manua
County—Rose Island
County—Swains Island
County—Western

PRIMARY MEDICAL CARE: Fed Ste Micronesia
County Listing

County Name
*Chuuk State
*Kosrae State
*Pohnpei State
*Yap State

PRIMARY MEDICAL CARE: Guam
County Listing

County Name
*Guam

PRIMARY MEDICAL CARE: N. Mariana Islands
County Listing

County Name
*Northern Islands
Service Area: Commonwealth N. Mariana Islands
*Rota
Service Area: Commonwealth N. Mariana Islands
*Saipan
Service Area: Commonwealth N. Mariana Islands
*Tinian
Service Area: Commonwealth N. Mariana Islands

PRIMARY MEDICAL CARE: N. Mariana Islands
Service Area Listing

Service Area Name
Commonwealth N. Mariana Islands
County—Northern Islands
County—Rota

PRIMARY MEDICAL CARE: N. Mariana Islands
Service Area Listing

Service Area Name
County—Saipan
County—Tinian

PRIMARY MEDICAL CARE: Republic of Palau
County Listing

County Name
*Republic Of Palau

PRIMARY MEDICAL CARE: Puerto Rico
County Listing

County Name
*Adjuntas
Population Group: Low Inc—RSA 9
Aguada
Population Group: Low Inc—RSA 1
Aguadilla
Population Group: Low Inc—RSA 6
*Aguas Buenas
Service Area: Caguas (Sub-Region I)
*Aibonito
Population Group: Low Inc—RSA 21
Anasco
Population Group: Low Inc—RSA 1
*Arecibo
Population Group: Low Inc—RSA 9
*Arroyo
Population Group: Low Inc—RSA 19
*Barceloneta
Population Group: Low Inc—RSA 9
*Barranquitas
Population Group: RSA 8
*Cabo Rojo
Population Group: Low Inc—RSA 3
*Caguas
Service Area: Caguas (Sub-Region I)
*Camuy
Population Group: Low Inc—RSA 4
*Canovanas
Population Group: Low Inc—RSA 14
*Catano
Population Group: Low Inc—RSA 9
*Cayey
Population Group: Low Inc—RSA 21
*Ceiba
Population Group: Low Inc—RSA 14
*Ciales
Population Group: Low Inc—RSA 24
*Cidra
Service Area: Caguas (Sub-Region I)
*Coamo
Population Group: Low Inc—RSA 20
*Comerio
Population Group: RSA 8
*Corozal
Population Group: RSA 8
*Culebra
Population Group: Low Inc—RSA 14
*Dorado
Population Group: Low Inc—RSA 9
*Fajardo
Population Group: Low Inc—RSA 14
*Florida
Population Group: Low Inc—RSA 9
*Guanica
Population Group: Low Inc—RSA 2
*Guayama
Population Group: Low Inc—RSA 19
Guayanilla

PRIMARY MEDICAL CARE: Puerto Rico
County Listing

County Name
Population Group: Low Inc—RSA 2
*Gurabo
Service Area: Caguas (Sub-Region I)
*Hatillo
Population Group: Low Inc—RSA 4
Hormigueros
Population Group: Low Inc—RSA 3
*Humacao
Population Group: Low Inc—RSA 17
*Isabela
Population Group: Low Inc—RSA 6
*Jayuya
Population Group: Low Inc—RSA 9
Juana Diaz
Population Group: Low Inc—RSA 20
*Juncos
Service Area: Caguas (Sub-Region I)
*Lajas
Population Group: Low Inc—RSA 3
*Lares
Population Group: Low Inc—RSA 4
*Las Marias
Population Group: Low Inc—RSA 4
*Las Peidras
Population Group: Low Inc—RSA 17
*Loiza
Population Group: Low Inc—RSA 14
*Luquillo
Population Group: Low Inc—RSA 14
*Manati
Population Group: Low Inc—RSA 24
*Maricao
Population Group: Low Inc—RSA 4
*Maunabo
Population Group: Low Inc—RSA 19
Mayaguez
Population Group: Low Inc—RSA 1
Moca
Population Group: Low Inc—RSA 6
*Morovis
Population Group: Low Inc—RSA 24
*Naguabo
Population Group: Low Inc—RSA 17
*Naranjito
Population Group: RSA 8
*Orocovis
Population Group: RSA 8
*Patillas
Population Group: Low Inc—RSA 19
Penuelas
Population Group: Low Inc—RSA 2
Ponce
Population Group: Low Inc—SW Ponce
Facility: Las Cucharas Corr Inst
*Quebradillas
Population Group: Low Inc—RSA 6
*Rincon
Population Group: Low Inc—RSA 1
*Rio Grande
Population Group: Low Inc—RSA 14
Sabana Grande
Population Group: Low Inc—RSA 2
*Salinas
Population Group: Low Inc—RSA 20
San German
Population Group: Low Inc—RSA 3
*San Lorenzo
Population Group: Low Inc—RSA 17
*San Sebastian
Population Group: Low Inc—RSA 4
*Santa Isabel
Population Group: Low Inc—RSA 20

PRIMARY MEDICAL CARE: Puerto Rico
County Listing

County Name

*Toa Alta
Population Group: Low Inc—RSA 9
*Toa Baja
Population Group: Low Inc—RSA 9
*Utuado
Population Group: Low Inc—RSA 9
*Vega Alta
Population Group: Low Inc—RSA 23
*Vega Baja
Population Group: Low Inc—RSA 23
*Vieques
Population Group: Low Inc—RSA 14
Villalba
Population Group: Low Inc—RSA 20
*Yabucoa
Population Group: Low Inc—RSA 17
*Yauco
Population Group: Low Inc—RSA 2

PRIMARY MEDICAL CARE: Puerto Rico
Service Area Listing

Service Area Name

Caguas (Sub-Region I)
County—Aguas Buenas
County—Caguas
County—Cidra
County—Gurabo
County—Juncos

PRIMARY MEDICAL CARE: Puerto Rico
Population Group Listing

Population Group

Low Inc—RSA 1
County—Aguada
Parts:
Aguada
County—Anasco
Parts:
Anasco
County—Mayaguez
Parts:
Mayaguez
County—Rincon
Parts:
Rincon
Low Inc—RSA 14
County—Canovanas
Parts:
Canovanas
County—Ceiba
Parts:
Ceiba
County—Culebra
Parts:
Culebra
County—Fajardo
Parts:
Fajardo
County—Loiza
Parts:
Loiza
County—Luquillo
Parts:
Luquillo
County—Rio Grande
Parts:
Rio Grande
County—Vieques
Parts:
Vieques

PRIMARY MEDICAL CARE: Puerto Rico
Population Group Listing

Population Group

Low Inc—RSA 17
County—Humacao
Parts:
Humacao
County—Las Peidras
Parts:
Las Piedras
County—Naguabo
Parts:
Naguabo
County—San Lorenzo
Parts:
San Lorenzo
County—Yabucoa
Parts:
Yabucoa
Low Inc—RSA 19
County—Arroyo
Parts:
Arroyo
County—Guayama
Parts:
Guayama
County—Maunabo
Parts:
Maunabo
County—Patillas
Parts:
Patillas
Low Inc—RSA 2
County—Guanica
Parts:
Guanica
County—Guayanilla
Parts:
Guayanilla
County—Penuelas
Parts:
Penuelas
County—Sabana Grande
Parts:
Sabana Grande
County—Yauco
Parts:
Yauco
Low Inc—RSA 20
County—Coamo
Parts:
Coamo
County—Juana Diaz
Parts:
Juana Diaz
County—Salinas
Parts:
Salinas
County—Santa Isabel
Parts:
Santa Isabel
County—Villalba
Parts:
Villalba
Low Inc—RSA 21
County—Aibonito
Parts:
Aibonita
County—Cayey
Parts:
Cayey
Low Inc—RSA 23
County—Vega Alta
Parts:
Low Income

PRIMARY MEDICAL CARE: Puerto Rico
Population Group Listing

Population Group

County—Vega Baja
Parts:
Low Income
Low Inc—RSA 24
County—Ciales
Parts:
Ciales
County—Manati
Parts:
Manati
County—Morovis
Parts:
Morovis
Low Inc—RSA 3
County—Cabo Rojo
Parts:
Cabo Rojo
County—Hormigueros
Parts:
Hormiqueros
County—Lajas
Parts:
Lajas
County—San German
Parts:
San German
Low Inc—RSA 4
County—Camuy
Parts:
Camuy
County—Hatillo
Parts:
Hatillo
County—Lares
Parts:
Lares
County—Las Marias
Parts:
Las Marias
County—Maricao
Parts:
Maricao
County—San Sebastian
Parts:
San Sebastian
Low Inc—RSA 6
County—Aguadilla
Parts:
Aguadilla
County—Isabela
Parts:
Isabela
County—Moca
Parts:
Moca
County—Quebradillas
Parts:
Quebradillas
Low Inc—RSA 9
County—Catano
Parts:
Catano
County—Dorado
Parts:
Dorado
County—Toa Alta
Parts:
Toa Alta
County—Toa Baja
Parts:
Toa Baja
Low Inc—RSA 9

PRIMARY MEDICAL CARE: Puerto Rico
Population Group Listing

Population Group

County—Adjuntas
Parts:
Adjuntas
County—Arecibo
Parts:
Arecibo
County—Barceloneta
Parts:
Barceloneta
County—Florida
Parts:
Florida
County—Jayuya
Parts:
Jayuya
County—Utuado
Parts:
Utuado
Low Inc—SW Ponce
County—Ponce
Parts:
C.T. 714.01–714.02
C.T. 715
C.T. 716.01–716.02
C.T. 719
C.T. 721.01–721.02
C.T. 721.99
C.T. 730.01–730.07
RSA 8
County—Barranquitas
Parts:
Barranquitas
County—Comerio
Parts:
Comerio
County—Corozal
Parts:
Corozal
County—Naranjito
Parts:
Naranjito
County—Orocovis
Parts:
Orocovis

PRIMARY MEDICAL CARE: Puerto Rico
Facility Listing

Facility Name

Las Cucharas Corr Inst
County—Ponce

PRIMARY MEDICAL CARE: Virgin Islands
County Listing

County Name

*St. Croix
Service Area: Fredericksted
*St. John Island
Population Group: Low Inc—St. Thomas/St. John
*St. Thomas
Population Group: Low Inc—St. Thomas/St. John

PRIMARY MEDICAL CARE: Virgin Islands
Service Area Listing

Service Area Name

Fredericksted
County—St. Croix
Parts:

PRIMARY MEDICAL CARE: Virgin Islands
Service Area Listing

Service Area Name

Fredericksted
Northwest
Southwest

PRIMARY MEDICAL CARE: Virgin Islands
Population Group Listing

Population Group

Low Inc—St. Thomas/St. John
County—St. John Island
Parts:
Low Income
County—St. Thomas
Parts:
Low Income

MENTAL HEALTH: Alabama
County Listing

County Name

Autauga
Service Area: Catchment Area M–14
Baldwin
Service Area: Catchment Area M–21
*Barbour
Service Area: Catchment Area M–19
*Bibb
Service Area: Catchment Area M–8
*Bullock
Service Area: Catchment Area M–15
*Butler
Service Area: Catchment Area M–18
Calhoun
Service Area: Catchment Area M–7
*Chambers
Service Area: Catchment Area M–12
*Cherokee
Service Area: Catchment Area M–6
*Chilton
Service Area: Catchment Area M–11
*Choctaw
Service Area: Catchment Area M–10
*Clarke
Service Area: Catchment Area M–17
*Clay
Service Area: Catchment Area M–9
*Cleburne
Service Area: Catchment Area M–7
*Coffee
Service Area: Catchment Area M–18
Colbert
Service Area: Catchment Area M–1
*Conecuh
Service Area: Catchment Area M–17
*Coosa
Service Area: Catchment Area M–9
*Covington
Service Area: Catchment Area M–18
*Crenshaw
Service Area: Catchment Area M–18
*Cullman
Service Area: Catchment Area M–22
Dale
Service Area: Catchment Area M–19
*Dallas
Service Area: Catchment Area M–13
*Dekalb
Service Area: Catchment Area M–6
Elmore
Service Area: Catchment Area M–14
*Escambia
Service Area: Catchment Area M–17

MENTAL HEALTH: Alabama
County Listing

County Name

Etowah
Service Area: Catchment Area M–6
*Fayette
Service Area: Catchment Area M–4
*Franklin
Service Area: Catchment Area M–1
*Geneva
Service Area: Catchment Area M–19
*Greene
Service Area: Catchment Area M–10
*Hale
Service Area: Catchment Area M–10
*Henry
Service Area: Catchment Area M–19
*Houston
Service Area: Catchment Area M–19
*Jackson
Service Area: Catchment Area M–20
*Lamar
Service Area: Catchment Area M–4
Lauderdale
Service Area: Catchment Area M–1
Lee
Service Area: Catchment Area M–12
*Lowndes
Service Area: Catchment Area M–14
*Macon
Service Area: Catchment Area M–15
*Marengo
Service Area: Catchment Area M–10
*Marion
Service Area: Catchment Area M–4
*Marshall
Service Area: Catchment Area M–20
Mobile
Service Area: Catchment Area M–16
*Monroe
Service Area: Catchment Area M–17
Montgomery
Service Area: Catchment Area M–14
*Perry
Service Area: Catchment Area M–13
*Pickens
Service Area: Catchment Area M–8
*Pike
Service Area: Catchment Area M–15
*Randolph
Service Area: Catchment Area M–9
Russell
Service Area: Catchment Area M–12
Shelby
Service Area: Catchment Area M–11
*Sumter
Service Area: Catchment Area M–10
*Talladega
Service Area: Catchment Area M–9
*Tallapoosa
Service Area: Catchment Area M–12
Tuscaloosa
Service Area: Catchment Area M–8
Facility: M. Starke Harper Geriatric Psych Center
*Walker
Service Area: Catchment Area M–4
*Washington
Service Area: Catchment Area M–16
*Wilcox
Service Area: Catchment Area M–13
*Winston
Service Area: Catchment Area M–4

MENTAL HEALTH: Alabama
Service Area Listing

Service Area Name
Catchment Area M–1
County—Colbert
County—Franklin
County—Lauderdale
Catchment Area M–10
County—Choctaw
County—Greene
County—Hale
County—Marengo
County—Sumter
Catchment Area M–11
County—Chilton
County—Shelby
Catchment Area M–12
County—Chambers
County—Lee
County—Russell
County—Tallapoosa
Catchment Area M–13
County—Dallas
County—Perry
County—Wilcox
Catchment Area M–14
County—Autauga
County—Elmore
County—Lowndes
County—Montgomery
Catchment Area M–15
County—Bullock
County—Macon
County—Pike
Catchment Area M–16
County—Mobile
County—Washington
Catchment Area M–17
County—Clarke
County—Conecuh
County—Escambia
County—Monroe
Catchment Area M–18
County—Butler
County—Coffee
County—Covington
County—Crenshaw
Catchment Area M–19
County—Barbour
County—Dale
County—Geneva
County—Henry
County—Houston
Catchment Area M–20
County—Jackson
County—Marshall
Catchment Area M–21
County—Baldwin
Catchment Area M–22
County—Cullman
Catchment Area M–4
County—Fayette
County—Lamar
County—Marion
County—Walker
County—Winston
Catchment Area M–6
County—Cherokee
County—Dekalb
County—Etowah
Catchment Area M–7
County—Calhoun
County—Cleburne
Catchment Area M–8
County—Bibb

MENTAL HEALTH: Alabama
Service Area Listing

Service Area Name
County—Pickens
County—Tuscaloosa
Catchment Area M–9
County—Clay
County—Coosa
County—Randolph
County—Talladega

MENTAL HEALTH: Alabama
Facility Listing

Facility Name
M. Starke Harper Geriatric Psych Center
County—Tuscaloosa

MENTAL HEALTH: Alaska
Census Area Listing

Census Area Name
*Aleutians East Borough
*Aleutians West Area
*Bethel Area
*Bristol Bay Borough
*Denali Borough
*Dillingham Area
*Haines Borough
*Ketchikan Gateway Borough
*Lake And Peninsula Borough
*Matanuska-Susitna Borough
*Nome Census Area
Service Area: Nome
*North Slope Borough
*Northwest Arctic Borough
*Prince Of Wales-Outer Ket
*Skagway-Hoonah-Angoon Borough
*Southeast-Fairbanks Area
*Valdez-Cordova Area
*Wade-Hampton Area
*Wrangell-Petersburg Area
*Yakutat Borough
*Yukon-Koyukuk Area

MENTAL HEALTH: Alaska
Service Area Listing

Service Area Name
Nome
Census Area—Nome Census Area

MENTAL HEALTH: Arizona
County Listing

County Name
*Apache
Service Area: N. Arizona Mental Hlth Catch Area
Coconino
Service Area: N. Arizona Mental Hlth Catch Area
*Gila
Service Area: Pinal/Gila Catchment Area
*La Paz
Service Area: Southwest Az Catchment Area
Maricopa
Facility: Maricopa Co Jails
Mohave
Service Area: N. Arizona Mental Hlth Catch Area
*Navajo
Service Area: N. Arizona Mental Hlth Catch Area

MENTAL HEALTH: Arizona
County Listing

County Name
Pinal
Service Area: Pinal/Gila Catchment Area
*Yavapai
Service Area: N. Arizona Mental Hlth Catch Area
*Yuma
Service Area: Southwest Az Catchment Area

MENTAL HEALTH: Arizona
Service Area Listing

Service Area Name
N. Arizona Mental Hlth Catch Area
County—Apache
County—Coconino
County—Mohave
County—Navajo
County—Yavapai
Pinal/Gila Catchment Area
County—Gila
County—Pinal
Southwest Az Catchment Area
County—La Paz
County—Yuma

MENTAL HEALTH: Arizona
Facility Listing

Facility Name
Maricopa Co Jails
County—Maricopa

MENTAL HEALTH: Arkansas
County Listing

County Name
*Arkansas
Service Area: Pine Bluff C.A.
*Ashley
Service Area: Monticello C.A.
*Baxter
Service Area: Mountain Home C.A.
*Boone
Service Area: Mountain Home C.A.
*Bradley
Service Area: Monticello C.A.
*Calhoun
Service Area: El Dorado
*Carroll
*Chicot
Service Area: Monticello C.A.
*Clark
Service Area: Hot Springs C.A.
*Clay
Service Area: Jonesboro
*Cleburne
Service Area: Batesville
*Cleveland
Service Area: Pine Bluff C.A.
*Columbia
Service Area: El Dorado
*Conway
Service Area: Russellville C.A.
Craighead
Service Area: Jonesboro
Crawford
Service Area: Fort Smith C.A.
Crittenden
Service Area: Helena
*Cross
Service Area: Helena

MENTAL HEALTH: Arkansas
County Listing

County Name

*Dallas
Service Area: El Dorado
*Desha
Service Area: Monticello C.A.
*Drew
Service Area: Monticello C.A.
*Franklin
Service Area: Fort Smith C.A.
*Fulton
Service Area: Batesville
*Garland
Service Area: Hot Springs C.A.
*Grant
Service Area: Pine Bluff C.A.
*Greene
Service Area: Jonesboro
*Hempstead
Service Area: Texarkana C.A.
*Hot Spring
Service Area: Hot Springs C.A.
*Howard
Service Area: Texarkana C.A.
*Independence
Service Area: Batesville
*Izard
Service Area: Batesville
*Jackson
Service Area: Batesville
Jefferson
Service Area: Pine Bluff C.A.
*Johnson
Service Area: Russellville C.A.
*Lafayette
Service Area: Texarkana C.A.
*Lawrence
Service Area: Jonesboro
*Lee
Service Area: Helena
*Lincoln
Service Area: Pine Bluff C.A.
*Little River
Service Area: Texarkana C.A.
*Logan
Service Area: Fort Smith C.A.
*Madison
*Marion
Service Area: Mountain Home C.A.
Miller
Service Area: Texarkana C.A.
*Mississippi
Service Area: Jonesboro
*Monroe
Service Area: Helena
*Montgomery
Service Area: Hot Springs C.A.
*Nevada
Service Area: El Dorado
*Newton
Service Area: Mountain Home C.A.
*Ouachita
Service Area: El Dorado
*Perry
Service Area: Russellville C.A.
*Phillips
Service Area: Helena
*Pike
Service Area: Hot Springs C.A.
*Poinsett
Service Area: Jonesboro
*Polk
Service Area: Fort Smith C.A.
*Pope

MENTAL HEALTH: Arkansas
County Listing

County Name

Service Area: Russellville C.A.
*Randolph
Service Area: Jonesboro
*Scott
Service Area: Fort Smith C.A.
*Searcy
Service Area: Mountain Home C.A.
Sebastian
Service Area: Fort Smith C.A.
*Sevier
Service Area: Texarkana C.A.
*Sharp
Service Area: Batesville
*St. Francis
Service Area: Helena
*Stone
Service Area: Batesville
*Union
Service Area: El Dorado
*Van Buren
Service Area: Batesville
*White
Service Area: Batesville
*Woodruff
Service Area: Batesville
*Yell
Service Area: Russellville C.A.

MENTAL HEALTH: Arkansas
Service Area Listing

Service Area Name

Batesville
County—Cleburne
County—Fulton
County—Independence
County—Izard
County—Jackson
County—Sharp
County—Stone
County—Van Buren
County—White
County—Woodruff
El Dorado
County—Calhoun
County—Columbia
County—Dallas
County—Nevada
County—Ouachita
County—Union
Fort Smith C.A.
County—Crawford
County—Franklin
County—Logan
County—Polk
County—Scott
County—Sebastian
Helena
County—Crittenden
County—Cross
County—Lee
County—Monroe
County—Phillips
County—St. Francis
Hot Springs C.A.
County—Clark
County—Garland
County—Hot Spring
County—Montgomery
County—Pike
Jonesboro
County—Clay

MENTAL HEALTH: Arkansas
Service Area Listing

Service Area Name

County—Craighead
County—Greene
County—Lawrence
County—Mississippi
County—Poinsett
County—Randolph
Monticello C.A.
County—Ashley
County—Bradley
County—Chicot
County—Desha
County—Drew
Mountain Home C.A.
County—Baxter
County—Boone
County—Marion
County—Newton
County—Searcy
Pine Bluff C.A.
County—Arkansas
County—Cleveland
County—Grant
County—Jefferson
County—Lincoln
Russellville C.A.
County—Conway
County—Johnson
County—Perry
County—Pope
County—Yell
Texarkana C.A.
County—Hempstead
County—Howard
County—Lafayette
County—Little River
County—Miller
County—Sevier

MENTAL HEALTH: California
County Listing

County Name

*Calaveras
Fresno
Service Area: West Side Fresno Co
Facility: Pleasant Valley State Prison
*Glenn
*Humboldt
Service Area: Garberville/Redway (MSSA 44)
*Imperial
Facility: Centinela State Prison
Kern
Population Group: Low Inc—Arvin/Lamont (MSSA 61)
Facility: North Kern State Prison
Facility: Wasco State Prison
*Kings
Facility: Avenal State Prison
Facility: CA State Prison—Corcoran
Facility: Substance Abuse Treatment Facility
*Lake
*Lassen (g)
Facility: High Desert State Prison
Madera (g)
Facility: Central Ca Womens Facility
Facility: Valley State Prison For Women
Marin
Facility: CA State Prison—San Quentin
Merced
Monterey

MENTAL HEALTH: California
County Listing

County Name

Facility: Correctional Train Fac—Soledad
Riverside
Facility: CA Rehabilitation Ctr
Facility: Ironwood State Prison
Sacramento
Facility: Folsom State Prison—Represa
San Bernardino
Service Area: Barstow (MSSA 149)
Facility: CA Institute For Men
San Diego
Facility: Richard J Donovan Corr Fac
San Joaquin
Facility: Deuel Voc Inst—Tracy
*Shasta
Population Group: Low Inc—Shasta Co
*Siskiyou County
Solano
Facility: CA State Prison—Vacaville
*Tehama
*Trinity
Tulare
Service Area: Earlimart (MSSA 230)
Service Area: Porterville (MSSAS 231 & 232)
Service Area: Visalia (MSSA 227, 228, 233a, 233b)
Service Area: Woodlake (MSSA 229)
*Tuolumne (g)
Facility: Sierra Conservation Center

MENTAL HEALTH: California
Service Area Listing

Service Area Name

Barstow (MSSA 149)
County—San Bernardino
Parts:
C.T. 93–95
C.T. 96.03
C.T. 116–121
Earlimart (MSSA 230)
County—Tulare
Parts:
C.T. 32
C.T. 42–44
Garberville/Redway (MSSA 44)
County—Humboldt
Parts:
C.T. 113
Porterville (MSSAS 231 & 232)
County—Tulare
Parts:
C.T. 27
C.T. 33–41
C.T. 45
Visalia (MSSA 227, 228, 233a, 233b)
County—Tulare
Parts:
C.T. 2
C.T. 3.02
C.T. 3.98
C.T. 4–6
C.T. 8–9
C.T. 10.01–10.02
C.T. 11–16
C.T. 17.01–17.02
C.T. 18–19
C.T. 20.01–20.05
C.T. 21–22
C.T. 23.01–23.02
C.T. 24–26
C.T. 28

MENTAL HEALTH: California
Service Area Listing

Service Area Name

C.T. 29.01–29.02
C.T. 30–31
West Side Fresno Co
County—Fresno
Parts:
C.T. 78
C.T. 79.98
C.T. 80–83
C.T. 84.01–84.02
Woodlake (MSSA 229)
County—Tulare
Parts:
C.T. 1
C.T. 7

MENTAL HEALTH: California
Population Group Listing

Population Group

Low Inc—Arvin/Lamont (MSSA 61)
County—Kern
Parts:
C.T. 62–64
Low Inc—Shasta Co
County—Shasta

MENTAL HEALTH: California
Facility Listing

Facility Name

Avenal State Prison
County—Kings
CA Institute For Men
County—San Bernardino
CA Rehabilitation Ctr
County—Riverside
CA State Prison—Corcoran
County—Kings
CA State Prison—San Quentin
County—Marin
CA State Prison—Vacaville
County—Solano
Centinela State Prison
County—Imperial
Central Ca Womens Facility
County—Madera
Correctional Train Fac—Soledad
County—Monterey
Deuel Voc Inst—Tracy
County—San Joaquin
Folsom State Prison—Represa
County—Sacramento
High Desert State Prison
County—Lassen
Ironwood State Prison
County—Riverside
North Kern State Prison
County—Kern
Pleasant Valley State Prison
County—Fresno
Richard J Donovan Corr Fac
County—San Diego
Sierra Conservation Center
County—Tuolumne
Substance Abuse Treatment Facility
County—Kings
Valley State Prison For Women
County—Madera
Wasco State Prison
County—Kern

MENTAL HEALTH: Colorado
County Listing

County Name

*Alamosa
Service Area: San Luis Valley
Arapahoe
Facility: Marvin W. Foote Youth Detention Center
*Cheyenne
Service Area: Northeast/East Central MH Reg
*Conejos
Service Area: San Luis Valley
*Costilla
Service Area: San Luis Valley
Denver
Facility: Denver R&D Center
*Elbert
Service Area: Northeast/East Central MH Reg
*Fremont
Facility: USP Florence
*Kit Carson
Service Area: Northeast/East Central MH Reg
*Lincoln
Service Area: Northeast/East Central MH Reg
*Logan
Service Area: Northeast/East Central MH Reg
*Mineral
Service Area: San Luis Valley
*Morgan
Service Area: Northeast/East Central MH Reg
*Phillips
Service Area: Northeast/East Central MH Reg
*Rio Grande
Service Area: San Luis Valley
*Saguache
Service Area: San Luis Valley
*Sedgwick
Service Area: Northeast/East Central MH Reg
*Washington
Service Area: Northeast/East Central MH Reg
*Yuma
Service Area: Northeast/East Central MH Reg

MENTAL HEALTH: Colorado
Service Area Listing

Service Area Name

Northeast/East Central MH Reg
County—Cheyenne
County—Elbert
County—Kit Carson
County—Lincoln
County—Logan
County—Morgan
County—Phillips
County—Sedgwick
County—Washington
County—Yuma
San Luis Valley
County—Alamosa
County—Conejos
County—Costilla
County—Mineral
County—Rio Grande
County—Saguache

MENTAL HEALTH: Colorado
Facility Listing

Facility Name
Denver R&D Center
County—Denver
Marvin W. Foote Youth Detention Center
County—Arapahoe
USP Florence
County—Fremont

MENTAL HEALTH: Connecticut
County Listing

County Name
Hartford
Service Area: Charter Oak Terrace/ Rice Heights
New London
Facility: York Corr Inst

MENTAL HEALTH: Connecticut
Service Area Listing

Service Area Name
Charter Oak Terrace/ Rice Heights
County—Hartford
Parts:
C.T. 5001–5004
C.T. 5019
C.T. 5027–5030
C.T. 5043
C.T. 5045–5046
C.T. 5049

MENTAL HEALTH: Connecticut
Facility Listing

Facility Name
York Corr Inst
County—New London

MENTAL HEALTH: Florida
County Listing

County Name
Alachua
Facility: Gainesville Corr Inst
*Baker
Facility: Baker Corr. Inst.
*Bradford
Service Area: Mental Health Catchment Area 3A
Facility: Florida State Prs
Facility: Lawtey Corr Inst
Facility: New River Corr Inst
Brevard
Facility: Brevard Corr Inst
*Calhoun
Facility: Calhoun Corr Inst
*Columbia
Service Area: Mental Health Catchment Area 3A
Facility: Columbia Corr Inst
*De Soto
Facility: Desoto Corr Inst
*Dixie
Service Area: Suwannee River
Facility: Cross City Corr Inst
Escambia
Facility: Century Corr Inst
*Gilchrist
Service Area: Suwannee River
Facility: Lancaster Corr Inst
*Glades
Population Group: Low Inc—South Central Florida

MENTAL HEALTH: Florida
County Listing

County Name
Facility: Moore Haven Corr Facility
*Gulf
Facility: Gulf Corr Inst
*Hamilton
Service Area: Mental Health Catchment Area 3A
Facility: Hamilton Corr Inst
*Hardee
Facility: Hardee Corr Inst
*Hendry
Population Group: Low Inc—South Central Florida
Facility: Hendry Corr Inst
Hernando
Facility: Hernando Corr Inst
*Highlands
Facility: Avon Park Corr Inst
Hillsborough
Population Group: Low Inc/MFW—SE Hillsborough
Facility: Hillsborough Corr Inst
*Holmes
Facility: Holmes Corr Inst
*Indian River
Facility: Indian River Corr Inst
*Jackson
Facility: Apalachee Corr Inst
Facility: Jackson Corr Inst
Facility: River Junction Corr Inst
*Jefferson
Facility: Jefferson Corr Inst
*Lafayette
Service Area: Mental Health Catchment Area 3A
Facility: Mayo Corr Inst
*Lake
Population Group: Low Inc—Lake Co
*Levy
Service Area: Suwannee River
*Liberty
Facility: Liberty Corr Inst
*Madison
Facility: Madison Corr Inst
Manatee
Population Group: Low Inc/MFW—Central Manatee
Marion
Facility: Florida Corr. Inst.
Facility: Marion Corr Inst
Martin
Population Group: Low Inc—Indiantown
Facility: Martin Corr Inst
*Monroe
Service Area: Upper/Middle Keys
Okaloosa
Facility: Okaloosa Corr Inst
*Okeechobee
Population Group: Low Inc/MFW—Okeechobee
Orange
Facility: C Fl Reception Ctr
Palm Beach
Service Area: Belle Glade/Pahokee
Facility: Glades Corr Inst
Pasco
Population Group: Low Inc/MFW E Pasco
Pinellas
Facility: Pinellas Cty Correctional Institution
Polk
Facility: Polk Corr Inst
*Putnam (g)
Facility: Putnam Corr Inst

MENTAL HEALTH: Florida
County Listing

County Name
Santa Rosa
Facility: Santa Rosa Corr Inst
St. Johns
*Sumter
Population Group: Low Inc—Sumter Co
Facility: Sumter Corr Inst
*Suwannee
Service Area: Mental Health Catchment Area 3A
*Union
Service Area: Mental Health Catchment Area 3A
Facility: N Fl Reception Ctr
*Wakulla
Facility: Wakulla Corr Inst
*Walton
Facility: Walton Corr Inst
*Washington
Facility: Washington Corr Inst

MENTAL HEALTH: Florida
Service Area Listing

Service Area Name
Belle Glade/Pahokee
County—Palm Beach
Parts:
Belle Glade-Pahokee Division
Mental Health Catchment Area 3A
County—Bradford
County—Columbia
County—Hamilton
County—Lafayette
County—Suwannee
County—Union
Suwannee River
County—Dixie
County—Gilchrist
County—Levy
Upper/Middle Keys
County—Monroe
Parts:
Middle Keys Division
Upper Keys Division

MENTAL HEALTH: Florida
Population Group Listing

Population Group
Low Inc—Indiantown
County—Martin
Parts:
Indiantown Division
Low Inc—Lake Co
County—Lake
Low Inc—South Central Florida
County—Glades
County—Hendry
Low Inc—Sumter Co
County—Sumter
Low Inc/MFW E Pasco
County—Pasco
Parts:
C.T. 320.01–320.02
C.T. 321.01–321.02
C.T. 322–329
C.T. 330.01–330.04
C.T. 331
Low Inc/MFW—Central Manatee
County—Manatee
Parts:
C.T. 1.01–1.04

MENTAL HEALTH: Florida
Population Group Listing

Population Group

C.T. 2
C.T. 3.01–3.03
C.T. 6.01
C.T. 7.01–7.02
C.T. 13
C.T. 15.01–15.02
C.T. 16
C.T. 19.01
C.T. 19.03–19.04
Low Inc/MFW—Okeechobee
County—Okeechobee
Low Inc/MFW—SE Hillsborough
County—Hillsborough
Parts:
Brandon Division
Gibsonton Division
Palm River-East Tampa Division
Plant City Division
Ruskin Division
Wimauma-Lithia Division

MENTAL HEALTH: Florida
Facility Listing

Facility Name

Apalachee Corr Inst
County—Jackson
Avon Park Corr Inst
County—Highlands
Baker Corr. Inst.
County—Baker
Brevard Corr Inst
County—Brevard
C Fl Reception Ctr
County—Orange
Calhoun Corr Inst
County—Calhoun
Century Corr Inst
County—Escambia
Columbia Corr Inst
County—Columbia
Cross City Corr Inst
County—Dixie
Desoto Corr Inst
County—De Soto
Florida Corr. Inst.
County—Marion
Florida State Prs
County—Bradford
Gainesville Corr Inst
County—Alachua
Glades Corr Inst
County—Palm Beach
Gulf Corr Inst
County—Gulf
Hamilton Corr Inst
County—Hamilton
Hardee Corr Inst
County—Hardee
Hendry Corr Inst
County—Hendry
Hernando Corr Inst
County—Hernando
Hillsborough Corr Inst
County—Hillsborough
Holmes Corr Inst
County—Holmes
Indian River Corr Inst
County—Indian River
Jackson Corr Inst
County—Jackson
Jefferson Corr Inst

MENTAL HEALTH: Florida
Facility Listing

Facility Name

County—Jefferson
Lancaster Corr Inst
County—Gilchrist
Lawtey Corr Inst
County—Bradford
Liberty Corr Inst
County—Liberty
Madison Corr Inst
County—Madison
Marion Corr Inst
County—Marion
Martin Corr Inst
County—Martin
Mayo Corr Inst
County—Lafayette
Moore Haven Corr Facility
County—Glades
N Fl Reception Ctr
County—Union
New River Corr Inst
County—Bradford
Okaloosa Corr Inst
County—Okaloosa
Pinellas Cty Correctional Institution
County—Pinellas
Polk Corr Inst
County—Polk
Putnam Corr Inst
County—Putnam
River Junction Corr Inst
County—Jackson
Santa Rosa Corr Inst
County—Santa Rosa
Sumter Corr Inst
County—Sumter
Wakulla Corr Inst
County—Wakulla
Walton Corr Inst
County—Walton
Washington Corr Inst
County—Washington

MENTAL HEALTH: Georgia
County Listing

County Name

*Appling
Service Area: Pineland Catchment Area
*Atkinson
Service Area: Satilla Ca #32
*Bacon
Service Area: Satilla Ca #32
*Baker
Service Area: Albany Catchment Area
*Brantley
Service Area: Satilla Ca #32
*Bryan
Service Area: Hinesville
*Bulloch
Service Area: Pineland Catchment Area
*Burke
Service Area: Ogeechee Catchment Area
*Butts
Service Area: McIntosh Trail Catchment Area
*Calhoun
Service Area: Albany Catchment Area
*Candler
Service Area: Pineland Catchment Area
*Carroll
Service Area: Chattahoochee-Flint
*Catoosa

MENTAL HEALTH: Georgia
County Listing

County Name

Service Area: MHCA #1—Lookout Mountain
*Charlton
Service Area: Satilla Ca #32
*Chattooga
Service Area: MHCA #1—Lookout Mountain
*Clinch
Service Area: Satilla Ca #32
Cobb
Facility: Devereux Treatment Center
*Coffee
Service Area: Satilla Ca #32
*Colquitt
Service Area: Thomas Trail
*Coweta
Service Area: Chattahoochee-Flint
*Crawford
Service Area: Phoenix Catchment Area
*Crisp
Service Area: Middle Flint CA 26
*Dade
Service Area: MHCA #1—Lookout Mountain
*Decatur
Service Area: Thomas Trail
*Dooly
Service Area: Middle Flint CA 26
*Dougherty
Service Area: Albany Catchment Area
*Early
Service Area: Albany Catchment Area
*Emanuel
Service Area: Ogeechee Catchment Area
*Evans
Service Area: Pineland Catchment Area
*Fayette
Service Area: McIntosh Trail Catchment Area
Fulton
Service Area: South Central Fulton
Service Area: West Fulton Trail
*Glascock
Service Area: Ogeechee Catchment Area
*Grady
Service Area: Thomas Trail
*Heard
Service Area: Chattahoochee-Flint
*Henry
Service Area: McIntosh Trail Catchment Area
Houston
Service Area: Phoenix Catchment Area
*Irwin
Facility: Irwin Youth Development Campus
*Jeff Davis
Service Area: Pineland Catchment Area
*Jefferson
Service Area: Ogeechee Catchment Area
*Jenkins
Service Area: Ogeechee Catchment Area
*Johnson
Facility: Wrightsville Youth Develp Campus
*Lamar
Service Area: McIntosh Trail Catchment Area
Lee
Service Area: Albany Catchment Area
*Liberty
Service Area: Hinesville
*Long
Service Area: Hinesville

MENTAL HEALTH: Georgia
County Listing

County Name

*Macon
Service Area: Middle Flint CA 26
*Marion
Service Area: Middle Flint CA 26
*McIntosh
Service Area: Hinesville
*Meriwether
Service Area: Chattahoochee-Flint
*Miller
Service Area: Albany Catchment Area
*Mitchell
Service Area: Thomas Trail
Facility: Autry State Prison
Peach
Service Area: Phoenix Catchment Area
*Pierce
Service Area: Satilla Ca #32
*Pike
Service Area: McIntosh Trail Catchment Area
*Schley
Service Area: Middle Flint CA 26
*Screven
Service Area: Ogeechee Catchment Area
*Seminole
Service Area: Thomas Trail
*Spalding
Service Area: McIntosh Trail Catchment Area
*Sumter
Service Area: Middle Flint CA 26
*Tattnall
Service Area: Pineland Catchment Area
*Taylor
Service Area: Middle Flint CA 26
*Terrell
Service Area: Albany Catchment Area
*Thomas
Service Area: Thomas Trail
*Toombs
Service Area: Pineland Catchment Area
*Troup
Service Area: Chattahoochee-Flint
*Upson
Service Area: McIntosh Trail Catchment Area
*Walker
Service Area: MHCA #1—Lookout Mountain
*Ware
Service Area: Satilla Ca #32
*Wayne
Service Area: Pineland Catchment Area
*Webster
Service Area: Middle Flint CA 26
*Worth
Service Area: Albany Catchment Area

MENTAL HEALTH: Georgia
Service Area Listing

Service Area Name

Albany Catchment Area
County—Baker
County—Calhoun
County—Dougherty
County—Early
County—Lee
County—Miller
County—Terrell
County—Worth
Chattahoochee-Flint
County—Carroll
County—Coweta
County—Heard
County—Meriwether
County—Troup
Hinesville
County—Bryan
County—Liberty
County—Long
County—McIntosh
McIntosh Trail Catchment Area
County—Butts
County—Fayette
County—Henry
County—Lamar
County—Pike
County—Spalding
County—Upson
Middle Flint CA 26
County—Crisp
County—Dooly
County—Macon
County—Marion
County—Schley
County—Sumter
County—Taylor
County—Webster
MHCA #1—Lookout Mountain
County—Catoosa
County—Chattooga
County—Dade
County—Walker
Ogeechee Catchment Area
County—Burke
County—Emanuel
County—Glascock
County—Jefferson
County—Jenkins
County—Screven
Phoenix Catchment Area
County—Crawford
County—Houston
County—Peach
Pineland Catchment Area
County—Appling
County—Bulloch
County—Candler
County—Evans
County—Jeff Davis
County—Tattnall
County—Toombs
County—Wayne
Satilla Ca #32
County—Atkinson
County—Bacon
County—Brantley
County—Charlton
County—Clinch
County—Coffee
County—Pierce
County—Ware
South Central Fulton
County—Fulton
Parts:
C.T. 44
C.T. 46.95
C.T. 48
C.T. 49.95
C.T. 50
C.T. 52–53
C.T. 55.01–55.02
C.T. 56–58
C.T. 63–64
C.T. 67
C.T. 68.01–68.02
C.T. 69–73
Thomas Trail
County—Colquitt
County—Decatur
County—Grady
County—Mitchell
County—Seminole
County—Thomas
West Fulton Trail
County—Fulton
Parts:
C.T. 60–62
C.T. 77.01–77.02
C.T. 78.02–78.04
C.T. 79–80
C.T. 81.01–81.02
C.T. 82.01–82.02
C.T. 83.01–83.02
C.T. 84–85
C.T. 86.01–86.02
C.T. 87.01–87.02
C.T. 88
C.T. 103.01–103.02

MENTAL HEALTH: Georgia
Facility Listing

Facility Name

Autry State Prison 3
County—Mitchell
Devereux Treatment Center
County—Cobb
Irwin Youth Development Campus
County—Irwin
Wrightsville Youth Develp Campus
County—Johnson

MENTAL HEALTH: Hawaii
County Listing

County Name

*Hawaii
Service Area: Kau
Service Area: Puna
Population Group: Low Inc—N Hawai'i
Honolulu
Service Area: Kalihi Palama
*Maui
Service Area: Island Of Molokai

MENTAL HEALTH: Hawaii
Service Area Listing

Service Area Name

Island Of Molokai
Parts:
C.T. 319
County—Maui
Parts:
C.T. 317–318
Kalihi Palama
County—Honolulu
Parts:
C.T. 51–57
C.T. 57.99–58.00
C.T. 59–61
C.T. 62.01–62.02
C.T. 63.01–63.02
C.T. 64.01–64.02

MENTAL HEALTH: Hawaii
Service Area Listing

Service Area Name

C.T. 65–66
Kau
County—Hawaii
Parts:
C.T. 212
Puna
County—Hawaii
Parts:
C.T. 210.01–210.02
C.T. 211

MENTAL HEALTH: Hawaii
Population Group Listing

Population Group

Low Inc—N Hawaii
County—Hawaii
Parts:
C.T. 217–221

MENTAL HEALTH: Idaho
County Listing

County Name

*Adams
Population Group: Low Inc/MFW—Catchment Area III
*Bannock
Service Area: Mental Hlth Region Vi
*Bear Lake
Service Area: Mental Hlth Region Vi
*Benewah
Service Area: Mental Hlth Region I
*Bingham
Service Area: Mental Hlth Region Vi
*Blaine
Service Area: Mental Hlth Region V
*Bonner
Service Area: Mental Hlth Region I
*Bonneville
Service Area: MH Region Vii
*Boundary
Service Area: Mental Hlth Region I
*Butte
Service Area: MH Region Vii
*Camas
Service Area: Mental Hlth Region V
*Canyon
Population Group: Low Inc/MFW—Catchment Area III
*Caribou
Service Area: Mental Hlth Region Vi
*Cassia
Service Area: Mental Hlth Region V
*Clark
Service Area: MH Region Vii
*Clearwater
Service Area: Mental Hlth Region II
*Custer
Service Area: MH Region Vii
*Franklin
Service Area: Mental Hlth Region Vi
*Fremont
Service Area: MH Region Vii
*Gem
Population Group: Low Inc/MFW—Catchment Area III
*Gooding
Service Area: Mental Hlth Region V
*Idaho
Service Area: Mental Hlth Region II
*Jefferson

MENTAL HEALTH: Idaho
County Listing

County Name

Service Area: MH Region Vii
*Jerome
Service Area: Mental Hlth Region V
*Kootenai
Service Area: Mental Hlth Region I
*Latah
Service Area: Mental Hlth Region II
*Lemhi
Service Area: MH Region Vii
*Lewis
Service Area: Mental Hlth Region II
*Lincoln
Service Area: Mental Hlth Region V
*Madison
Service Area: MH Region Vii
*Minidoka
Service Area: Mental Hlth Region V
*Nez Perce
Service Area: Mental Hlth Region II
*Oneida
Service Area: Mental Hlth Region Vi
*Owyhee
Population Group: Low Inc/MFW—Catchment Area III
*Payette
Population Group: Low Inc/MFW—Catchment Area III
*Power
Service Area: Mental Hlth Region Vi
*Shoshone
Service Area: Mental Hlth Region I
*Teton
Service Area: MH Region Vii
*Twin Falls
Service Area: Mental Hlth Region V
*Washington
Population Group: Low Inc/MFW—Catchment Area III

MENTAL HEALTH: Idaho
Service Area Listing

Service Area Name

Mental Hlth Region I
County—Benewah
County—Bonner
County—Boundary
County—Kootenai
County—Shoshone
Mental Hlth Region II
County—Clearwater
County—Idaho
County—Latah
County—Lewis
County—Nez Perce
Mental Hlth Region V
County—Blaine
County—Camas
County—Cassia
County—Gooding
County—Jerome
County—Lincoln
County—Minidoka
County—Twin Falls
Mental Hlth Region Vi
County—Bannock
County—Bear Lake
County—Bingham
County—Caribou
County—Franklin
County—Oneida
County—Power

MENTAL HEALTH: Idaho
Service Area Listing

Service Area Name

MH Region Vii
County—Bonneville
County—Butte
County—Clark
County—Custer
County—Fremont
County—Jefferson
County—Lemhi
County—Madison
County—Teton

MENTAL HEALTH: Idaho
Population Group Listing

Population Group

Low Inc/MFW—Catchment Area III
County—Adams
County—Canyon
County—Gem
County—Owyhee
County—Payette
County—Washington

MENTAL HEALTH: Illinois
County Listing

County Name

*Christian
Service Area: Catchment Area 03–03–04
*Clay
Service Area: Catchment Area 4–03–33
*Coles
Service Area: Catchment Area 3
Cook
Service Area: Ashburn/Beverly/Mt Greenwood/Morgan Park
Service Area: Auburn Gresham/Washington Heights
Service Area: Roseland/Pullman/Riverdale
Service Area: South Chicago
Service Area: South Shore/Chatham/Avalon Park/Burnside
Population Group: Hmlss—Uptown/Near North Side/Loop
Facility: Cook Co Dept Of Corr
Facility: Englewood Neighborhood Hlth Ctr
Facility: Tinley Park Mhc
*Crawford
Service Area: Catchment Area 4–03–33
*Cumberland
Service Area: Catchment Area 3
*Douglas
Service Area: Catchment Area 3
*Edwards
Service Area: Catchment Area 4–03–33
*Franklin
Service Area: Catchment Area 4
*Gallatin
Service Area: Catchment Area 4
*Hamilton
Service Area: Catchment Area 4
*Henderson
Service Area: Galesburg
*Henry
Service Area: Galesburg
*Jasper
Service Area: Catchment Area 4–03–33
*Jefferson
Service Area: Catchment Area 4
*Knox
Service Area: Galesburg
*Lawrence

MENTAL HEALTH: Illinois
County Listing

County Name

Service Area: Catchment Area 4–03–33
*Macoupin
Service Area: Catchment Area 03–03–04
*Montgomery
Service Area: Catchment Area 03–03–04
*Richland
Service Area: Catchment Area 4–03–33
*Saline
Service Area: Catchment Area 4
*Shelby
Service Area: Catchment Area 3
*Wabash
Service Area: Catchment Area 4–03–33
*Warren
Service Area: Galesburg
*Wayne
Service Area: Catchment Area 4–03–33
*White
Service Area: Catchment Area 4
*Williamson
Service Area: Catchment Area 4

MENTAL HEALTH: Illinois
Service Area Listing

Service Area Name

Ashburn/Beverly/Mt Greenwood/Morgan Park
County—Cook
Parts:
C.T. 7001–7005
C.T. 7201–7207
C.T. 7401–7404
C.T. 7501–7506
Auburn Gresham/Washington Heights
County—Cook
Parts:
C.T. 7101–7115
C.T. 7301–7307
Catchment Area 03–03–04
County—Christian
County—Macoupin
County—Montgomery
Catchment Area 3
County—Coles
County—Cumberland
County—Douglas
County—Shelby
Catchment Area 4
County—Franklin
County—Gallatin
County—Hamilton
County—Jefferson
County—Saline
County—White
County—Williamson
Catchment Area 4–03–33
County—Clay
County—Crawford
County—Edwards
County—Jasper
County—Lawrence
County—Richland
County—Wabash
County—Wayne
Galesburg
County—Henderson
County—Henry
County—Knox
County—Warren
Roseland/Pullman/Riverdale
County—Cook
Parts:

MENTAL HEALTH: Illinois
Service Area Listing

Service Area Name

C.T. 4901–4914
C.T. 5001–5003
C.T. 5301–5306
C.T. 5401
South Chicago
County—Cook
Parts:
C.T. 4601–4610
C.T. 4801–4805
C.T. 5101–5105
C.T. 5201–5206
C.T. 5501–5502
South Shore/Chatham/Avalon Park/Burnside
County—Cook
Parts:
C.T. 4301–4314
C.T. 4401–4409
C.T. 4501–4503
C.T. 4701
C.T. 6901–6915

MENTAL HEALTH: Ilinois
Population Group Listing

Population Group

Hmlss—Uptown/Near North Side/Loop 3
County—Cook
Parts:
Edgewater (C.T. 301–309)
Lakeview (C.T. 601–634)
Lincoln Park(C.T.701–720
Loop (C.T. 3201–3206)
Near N Side (C.T.801–819
Uptown (C.T. 310–321)

MENTAL HEALTH: Illinois
Facility Listing

Facility Name

Cook Co Dept Of Corr
County—Cook
Englewood Neighborhood Hlth Ctr
County—Cook
Tinley Park Mhc
County—Cook

MENTAL HEALTH: Indiana
County Listing

County Name

Adams
*Crawford
Service Area: Southern Indiana Catchment Area
*Dubois
Service Area: Southern Indiana Catchment Area
*Grant
*Greene
Hendricks
Facility: Reception And Diagnostic Ctr
*Huntington
Service Area: Warsaw
*Kosciusko
Service Area: Warsaw
*La Porte
Facility: Indiana State Prison
Lake
Service Area: Gary
Madison
Facility: Pendleton Corr Fac
*Marshall

MENTAL HEALTH: Indiana
County Listing

County Name

Service Area: Warsaw
*Miami
Facility: Miami Corr Facility
*Orange
Service Area: Southern Indiana Catchment Area
*Parke
Facility: Rockville Corr Fac
*Perry
Service Area: Southern Indiana Catchment Area
Facility: Branchville Training Ctr
*Spencer
Service Area: Southern Indiana Catchment Area
*Sullivan
*Wabash
Service Area: Warsaw
*Whitley
Service Area: Warsaw

MENTAL HEALTH: Indiana
Service Area Listing

Service Area Name

Gary
County—Lake
Parts:
C.T. 101
C.T. 102.98–103.00
C.T. 104–134
C.T. 411–412
C.T. 413.01
Southern Indiana Catchment Area
County—Crawford
County—Dubois
County—Orange
County—Perry
County—Spencer
Warsaw
County—Huntington
County—Kosciusko
County—Marshall
County—Wabash
County—Whitley

MENTAL HEALTH: Indiana
Facility Listing

Facility Name

Branchville Training Ctr
County—Perry
Indiana State Prison
County—La Porte
Miami Corr Facility
County—Miami
Pendleton Corr Fac
County—Madison
Reception And Diagnostic Ctr
County—Hendricks
Rockville Corr Fac
County—Parke

MENTAL HEALTH: Iowa
County Listing

County Name

*Adair
Service Area: Catchment Area 13
*Allamakee
Service Area: Catchment Area 3
*Appanoose

MENTAL HEALTH: Iowa
County Listing

County Name

Service Area: Catchment Area 15
*Audubon
Service Area: Catchment Area 13
*Boone
Service Area: Ft Dodge/Boone
*Bremer
Service Area: Catchment Area 3
*Buchanan
Service Area: Catchment Area 3
*Buena Vista
Service Area: MHCA 1
*Butler
Service Area: Catchment Area 3
*Calhoun
Service Area: Ft Dodge/Boone
*Cass
Service Area: Catchment Area 13
*Cerro Gordo
Service Area: Mental Hlth Catch Area 2
*Cherokee
Service Area: MHCA 1
*Chickasaw
Service Area: Catchment Area 3
*Clay
Service Area: MHCA 1
*Clayton
Service Area: Catchment Area 3
*Clinton
Service Area: Clinton/Jackson
*Dallas
Service Area: Catchment Area 13
*Davis
Service Area: Catchment Area 15
*Delaware
Service Area: Catchment Area 3
*Des Moines
Service Area: Mental Hlth Catch Area 16
*Dickinson
Service Area: MHCA 1
Dubuque
Service Area: Clinton/Jackson
*Emmet
Service Area: MHCA 1
*Fayette
Service Area: Catchment Area 3
*Floyd
Service Area: Mental Hlth Catch Area 2
*Franklin
Service Area: Mental Hlth Catch Area 2
*Greene
Service Area: Ft Dodge/Boone
*Guthrie
Service Area: Catchment Area 13
*Hamilton
Service Area: Ft Dodge/Boone
*Hancock
Service Area: Mental Hlth Catch Area 2
*Hardin
Service Area: Catchment Area 8
*Harrison
Service Area: Catchment Area 12
*Henry
Service Area: Mental Hlth Catch Area 16
*Howard
Service Area: Catchment Area 3
*Humboldt
Service Area: Ft Dodge/Boone
*Ida
Service Area: MHCA 1
*Jackson
Service Area: Clinton/Jackson
*Jasper

MENTAL HEALTH: Iowa
County Listing

County Name

Service Area: Catchment Area 8
*Jefferson
Service Area: Mental Hlth Catch Area 16
*Keokuk
Service Area: Catchment Area 8
*Kossuth
Service Area: Mental Hlth Catch Area 2
*Lee
Service Area: Mental Hlth Catch Area 16
*Louisa
Service Area: Mental Hlth Catch Area 16
*Lucas
Service Area: Catchment Area 15
*Lyon
Service Area: MHCA 1
*Madison
Service Area: Catchment Area 13
*Mahaska
Service Area: Catchment Area 8
*Marion
Service Area: Catchment Area 8
*Marshall
Service Area: Catchment Area 8
*Mitchell
Service Area: Mental Hlth Catch Area 2
*Monona
Service Area: Catchment Area 12
*Monroe
Service Area: Catchment Area 15
*Montgomery
Service Area: Catchment Area 13
*O'brien
Service Area: MHCA 1
*Osceola
Service Area: MHCA 1
*Page
Service Area: Catchment Area 13
*Palo Alto
Service Area: MHCA 1
*Plymouth
Service Area: MHCA 1
*Pocahontas
Service Area: MHCA 1
*Poweshiek
Service Area: Catchment Area 8
*Shelby
Service Area: Catchment Area 13
*Sioux
Service Area: MHCA 1
*Tama
Service Area: Catchment Area 8
*Van Buren
Service Area: Mental Hlth Catch Area 16
*Wapello
Service Area: Catchment Area 15
*Washington
Service Area: Mental Hlth Catch Area 16
*Wayne
Service Area: Catchment Area 15
*Webster
Service Area: Ft Dodge/Boone
*Winnebago
Service Area: Mental Hlth Catch Area 2
*Winneshiek
Service Area: Catchment Area 3
*Woodbury
Service Area: Catchment Area 12
*Worth
Service Area: Mental Hlth Catch Area 2
*Wright
Service Area: Mental Hlth Catch Area 2

MENTAL HEALTH: Iowa
Service Area Listing

Service Area Name

Catchment Area 12
County—Harrison
County—Monona
County—Woodbury
Catchment Area 13
County—Adair
County—Audubon
County—Cass
County—Dallas
Parts:
Dallas Township
Lincoln Township
Linn Township
Spring Valley Township
Union Township
Washington Township
County—Adair
County—Audubon
County—Cass
County—Guthrie
County—Madison
County—Montgomery
County—Page
County—Shelby
Catchment Area 15
County—Appanoose
County—Davis
County—Lucas
County—Monroe
County—Wapello
County—Wayne
Catchment Area 3
County—Allamakee
County—Bremer
County—Buchanan
County—Butler
County—Chickasaw
County—Clayton
County—Delaware
County—Fayette
County—Howard
County—Winneshiek
Catchment Area 8
County—Hardin
County—Jasper
County—Keokuk
County—Mahaska
County—Marion
County—Marshall
County—Poweshiek
County—Tama
Clinton/Jackson
County—Clinton
County—Dubuque
County—Jackson
Ft Dodge/Boone
County—Boone
County—Calhoun
County—Greene
County—Hamilton
County—Humboldt
County—Webster
Mental Hlth Catch Area 16
County—Des Moines
County—Henry
County—Jefferson
County—Lee
County—Louisa
County—Van Buren
County—Washington
Mental Hlth Catch Area 2
County—Cerro Gordo

MENTAL HEALTH: Iowa
Service Area Listing

Service Area Name

County—Floyd
County—Franklin
County—Hancock
County—Kossuth
County—Mitchell
County—Winnebago
County—Worth
County—Wright
MHCA 1
County—Buena Vista
County—Cherokee
County—Clay
County—Dickinson
County—Emmet
County—Ida
County—Lyon
County—O'brien
County—Osceola
County—Palo Alto
County—Plymouth
County—Pocahontas
County—Sioux

MENTAL HEALTH: Kansas
County Listing

County Name

*Allen
Service Area: Mental Hlth Area 7
*Anderson
Service Area: Mental Hlth Area 7
*Atchison
Service Area: Mental Hlth Area 4
*Barber
Service Area: Catchment Area 21
*Barton
Service Area: Mental Hlth Area 20
*Bourbon
Service Area: Mental Hlth Area 7
*Brown
Service Area: Mental Hlth Area 3
*Chase
Service Area: Mental Hlth Area 12
*Chautauqua
Service Area: Mental Hlth Area 13
*Cherokee
*Cheyenne
Service Area: Mental Hlth Area 23
*Clark
Service Area: Mental Hlth Area 22
*Cloud
Service Area: Mental Health Area 14 (Part)
*Coffey
Service Area: Mental Hlth Area 12
*Comanche
Service Area: Mental Hlth Area 22
*Cowley
*Crawford
*Decatur
Service Area: Mental Hlth Area 23
*Dickinson
Service Area: Mental Hlth Area 15
*Doniphan
Service Area: Mental Hlth Area 3
*Edwards
Service Area: Mental Hlth Area 22
*Elk
Service Area: Mental Hlth Area 13
*Ellis
Service Area: Mental Hlth Area 23
*Ellsworth
Service Area: Mental Hlth Area 15

MENTAL HEALTH: Kansas
County Listing

County Name

*Finney
Service Area: Mental Health Area 24
*Ford
Service Area: Mental Health Area 24
*Franklin
*Gove
Service Area: Mental Hlth Area 23
*Graham
Service Area: Mental Hlth Area 23
*Grant
Service Area: Mental Health Area 24
*Gray
Service Area: Mental Health Area 24
*Greeley
Service Area: Mental Health Area 24
*Greenwood
Service Area: Mental Hlth Area 12
*Hamilton
Service Area: Mental Health Area 24
*Harper
Service Area: Catchment Area 21
*Haskell
Service Area: Mental Hlth Area 25
*Hodgeman
Service Area: Mental Health Area 24
*Jackson
Service Area: Mental Hlth Area 3
*Jefferson
Service Area: Mental Hlth Area 4
*Jewell
Service Area: Mental Health Area 14 (Part)
*Kearny
Service Area: Mental Health Area 24
*Kingman
Service Area: Catchment Area 21
*Kiowa
Service Area: Mental Hlth Area 22
*Labette
*Lane
Service Area: Mental Health Area 24
Leavenworth
Service Area: Mental Hlth Area 4
*Lincoln
Service Area: Mental Hlth Area 15
*Linn
Service Area: Mental Hlth Area 7
*Logan
Service Area: Mental Hlth Area 23
*Lyon
Service Area: Mental Hlth Area 12
*Meade
Service Area: Mental Hlth Area 25
Miami
Service Area: Mental Hlth Area 6
*Mitchell
Service Area: Mental Health Area 14 (Part)
*Montgomery
Service Area: Mental Hlth Area 13
*Morris
Service Area: Mental Hlth Area 12
*Morton
Service Area: Mental Health Area 24
*Nemaha
Service Area: Mental Hlth Area 3
*Neosho
Service Area: Mental Hlth Area 7
*Ness
Service Area: Mental Hlth Area 23
*Norton
Service Area: Mental Hlth Area 23
*Osage
Service Area: Mental Hlth Area 12

MENTAL HEALTH: Kansas
County Listing

County Name

*Osborne
Service Area: Mental Hlth Area 23
*Ottawa
Service Area: Mental Hlth Area 15
*Pawnee
Service Area: Mental Hlth Area 20
*Phillips
Service Area: Mental Hlth Area 23
*Pratt
Service Area: Catchment Area 21
*Rawlins
Service Area: Mental Hlth Area 23
*Reno
Service Area: Catchment Area 21
*Republic
Service Area: Mental Health Area 14 (Part)
*Rice
Service Area: Mental Hlth Area 20
*Rooks
Service Area: Mental Hlth Area 23
*Rush
Service Area: Mental Hlth Area 23
*Russell
Service Area: Mental Hlth Area 23
*Saline
Service Area: Mental Hlth Area 15
*Scott
Service Area: Mental Health Area 24
*Seward
Service Area: Mental Hlth Area 25
*Sheridan
Service Area: Mental Hlth Area 23
*Sherman
Service Area: Mental Hlth Area 23
*Smith
Service Area: Mental Hlth Area 23
*Stafford
Service Area: Mental Hlth Area 20
*Stanton
Service Area: Mental Health Area 24
*Stevens
Service Area: Mental Hlth Area 25
*Sumner
*Thomas
Service Area: Mental Hlth Area 23
*Trego
Service Area: Mental Hlth Area 23
*Wabaunsee
Service Area: Mental Hlth Area 12
*Wallace
Service Area: Mental Hlth Area 23
*Washington
Service Area: Mental Health Area 14 (Part)
*Wichita
Service Area: Mental Health Area 24
*Wilson
Service Area: Mental Hlth Area 13
*Woodson
Service Area: Mental Hlth Area 7

MENTAL HEALTH: Kansas
Service Area Listing

Service Area Name

Catchment Area 21
County—Barber
County—Harper
County—Kingman
County—Pratt
County—Reno
Mental Health Area 14 (Part)
County—Cloud

MENTAL HEALTH: Kansas
Service Area Listing

Service Area Name

County—Jewell
County—Mitchell
County—Republic
County—Washington
Mental Health Area 24
County—Finney
County—Ford
County—Grant
County—Gray
County—Greeley
County—Hamilton
County—Hodgeman
County—Kearny
County—Lane
County—Morton
County—Scott
County—Stanton
County—Wichita
Mental Hlth Area 12
County—Chase
County—Coffey
County—Greenwood
County—Lyon
County—Morris
County—Osage
County—Wabaunsee
Mental Hlth Area 13
County—Chautauqua
County—Elk
County—Montgomery
County—Wilson
Mental Hlth Area 15
County—Dickinson
County—Ellsworth
County—Lincoln
County—Ottawa
County—Saline
Mental Hlth Area 20
County—Barton
County—Pawnee
County—Rice
County—Stafford
Mental Hlth Area 22
County—Clark
County—Comanche
County—Edwards
County—Kiowa
Mental Hlth Area 23
County—Cheyenne
County—Decatur
County—Ellis
County—Gove
County—Graham
County—Logan
County—Ness
County—Norton
County—Osborne
County—Phillips
County—Rawlins
County—Rooks
County—Rush
County—Russell
County—Sheridan
County—Sherman
County—Smith
County—Thomas
County—Trego
County—Wallace
Mental Hlth Area 25
County—Haskell
County—Meade
County—Seward

MENTAL HEALTH: Kansas
Service Area Listing

Service Area Name

County—Stevens
Mental Hlth Area 3
County—Brown
County—Doniphan
County—Jackson
County—Nemaha
Mental Hlth Area 4
County—Atchison
County—Jefferson
County—Leavenworth
Mental Hlth Area 6
County—Miami
Mental Hlth Area 7
County—Allen
County—Anderson
County—Bourbon
County—Linn
County—Neosho
County—Woodson

MENTAL HEALTH: Kentucky
County Listing

County Name

*Adair
Service Area: Lake Cumberland Catchment Area
*Allen
Service Area: Barren River Catchment Area
*Anderson
*Ballard
Service Area: Western Kentucy
*Barren
Service Area: Barren River Catchment Area
*Bath
Service Area: Gateway
*Bell
Service Area: Cumberland River B
*Boyd
Service Area: Fivco Catchment Area
*Boyle
Service Area: Danville Catchment Area
*Bracken
Service Area: Buffalo Trace
*Breathitt
Service Area: Upper Kentucky River
*Breckinridge
Service Area: North Central
*Butler
Service Area: Barren River Catchment Area
*Caldwell
Service Area: Pennyroyal
*Calloway
Service Area: Western Kentucy
*Carlisle
Service Area: Western Kentucy
*Carroll
Service Area: Northern Kentucky
*Carter
Service Area: Fivco Catchment Area
*Casey
Service Area: Lake Cumberland Catchment Area
*Christian
Service Area: Pennyroyal
*Clay
Service Area: Cumberland River A
*Clinton

MENTAL HEALTH: Kentucky
County Listing

Service Area: Lake Cumberland Catchment Area
*Crittenden
Service Area: Pennyroyal
*Cumberland
Service Area: Lake Cumberland Catchment Area
*Daviess
Service Area: Green River Catchment Area
*Edmonson
Service Area: Barren River Catchment Area
*Elliott
Service Area: Fivco Catchment Area
*Estill
*Fleming
Service Area: Buffalo Trace
*Floyd
Service Area: Mountain
*Franklin
*Fulton
Service Area: Western Kentucy
*Gallatin
Service Area: Northern Kentucky
*Garrard
Service Area: Danville Catchment Area
*Grant
Service Area: Northern Kentucky
*Graves
Service Area: Western Kentucy
*Grayson
Service Area: North Central
*Green
Service Area: Lake Cumberland Catchment Area
*Greenup
Service Area: Fivco Catchment Area
*Hancock
Service Area: Green River Catchment Area
*Hardin
Service Area: North Central
*Harlan
Service Area: Cumberland River B
*Harrison
*Hart
Service Area: Barren River Catchment Area
*Henderson
Service Area: Green River Catchment Area
*Henry
*Hickman
Service Area: Western Kentucy
*Hopkins
Service Area: Pennyroyal
*Jackson
Service Area: Cumberland River A
*Johnson
Service Area: Mountain
*Knott
Service Area: Upper Kentucky River
*Knox
Service Area: Cumberland River B
*Larue
Service Area: North Central
*Laurel
Service Area: Cumberland River A
*Lawrence
Service Area: Fivco Catchment Area
*Lee
Service Area: Upper Kentucky River
*Leslie
Service Area: Upper Kentucky River
*Letcher

MENTAL HEALTH: Kentucky
County Listing

Service Area: Upper Kentucky River
*Lewis
Service Area: Buffalo Trace
*Lincoln
Service Area: Danville Catchment Area
*Livingston
Service Area: Pennyroyal
*Logan
Service Area: Barren River Catchment Area
*Lyon
Service Area: Pennyroyal
Madison
*Magoffin
Service Area: Mountain
*Marion
Service Area: North Central
*Marshall
Service Area: Western Kentucy
*Martin
Service Area: Mountain
*Mason
Service Area: Buffalo Trace
*McCracken
Service Area: Western Kentucy
*McCreary
Service Area: Lake Cumberland Catchment Area
*McLean
Service Area: Green River Catchment Area
*Meade
Service Area: North Central
*Menifee
Service Area: Gateway
*Mercer
Service Area: Danville Catchment Area
*Metcalfe
Service Area: Barren River Catchment Area
*Monroe
Service Area: Barren River Catchment Area
*Montgomery
Service Area: Gateway
*Morgan
Service Area: Gateway
*Muhlenberg
Service Area: Pennyroyal
*Nelson
Service Area: North Central
*Nicholas
*Ohio
Service Area: Green River Catchment Area
*Owen
Service Area: Northern Kentucky
*Owsley
Service Area: Upper Kentucky River
*Perry
Service Area: Upper Kentucky River
*Pike
Service Area: Mountain
*Powell
*Pulaski
Service Area: Lake Cumberland Catchment Area
*Robertson
Service Area: Buffalo Trace
*Rockcastle
Service Area: Cumberland River A
*Rowan
Service Area: Gateway
*Russell
Service Area: Lake Cumberland Catchment Area

MENTAL HEALTH: Kentucky
County Listing

*Simpson
Service Area: Barren River Catchment Area
*Spencer
*Taylor
Service Area: Lake Cumberland Catchment Area
*Todd
Service Area: Pennyroyal
*Trigg
Service Area: Pennyroyal
*Trimble
*Union
Service Area: Green River Catchment Area
*Warren
Service Area: Barren River Catchment Area
*Washington
Service Area: North Central
*Wayne
Service Area: Lake Cumberland Catchment Area
*Webster
Service Area: Green River Catchment Area
*Whitley
Service Area: Cumberland River A
*Wolfe
Service Area: Upper Kentucky River

MENTAL HEALTH: Kentucky
Service Area Listing

Service Area Name

Barren River Catchment Area
County—Allen
County—Barren
County—Butler
County—Edmonson
County—Hart
County—Logan
County—Metcalfe
County—Monroe
County—Simpson
County—Warren
Buffalo Trace
County—Bracken
County—Fleming
County—Lewis
County—Mason
County—Robertson
Cumberland River A
County—Clay
County—Jackson
County—Laurel
County—Rockcastle
County—Whitley
Cumberland River B
County—Bell
County—Harlan
County—Knox
Danville Catchment Area
County—Boyle
County—Garrard
County—Lincoln
County—Mercer
Fivco Catchment Area
County—Boyd
County—Carter
County—Elliott
County—Greenup
County—Lawrence
Gateway
County—Bath

MENTAL HEALTH: Kentucky
Service Area Listing

Service Area Name

County—Menifee
County—Montgomery
County—Morgan
County—Rowan
Green River Catchment Area
County—Daviess
County—Hancock
County—Henderson
County—McLean
County—Ohio
County—Union
County—Webster
Lake Cumberland Catchment Area
County—Adair
County—Casey
County—Clinton
County—Cumberland
County—Green
County—McCreary
County—Pulaski
County—Russell
County—Taylor
County—Wayne
Mountain
County—Floyd
County—Johnson
County—Magoffin
County—Martin
County—Pike
North Central
County—Breckinridge
County—Grayson
County—Hardin
County—Larue
County—Marion
County—Meade
County—Nelson
County—Washington
Northern Kentucky
County—Carroll
County—Gallatin
County—Grant
County—Owen
Pennyroyal
County—Caldwell
County—Christian
County—Crittenden
County—Hopkins
County—Livingston
County—Lyon
County—Muhlenberg
County—Todd
County—Trigg
Upper Kentucky River
County—Breathitt
County—Knott
County—Lee
County—Leslie
County—Letcher
County—Owsley
County—Perry
County—Wolfe
Western Kentucy
County—Ballard
County—Calloway
County—Carlisle
County—Fulton
County—Graves
County—Hickman
County—McCracken
County—Marshall

MENTAL HEALTH: Louisiana
Parish Listing

Parish Name
*St. Mary

MENTAL HEALTH: Maine
County Listing

County Name
*Aroostook
Population Group: Low Inc—MHCA 1
Cumberland
Population Group: Low Inc—Bridgton MHAa
*Franklin
Service Area: Rumford
*Oxford
Service Area: Rumford
Population Group: Low Inc—Bridgton MHAa
Penobscot
Population Group: Low Inc—MHCA 2
Population Group: Low Inc—MHCA 1
*Piscataquis
Population Group: Low Inc—MHCA 2
*Somerset
Population Group: Low Inc—MHCA 3
*Washington
Service Area: Greater Washington
Population Group: Low Inc—MHCA 1

MENTAL HEALTH: Maine
Service Area Listing

Service Area Name
Greater Washington
County—Washington
Parts:
Addison Town
Alexander Town
Baileyville Town
Baring Town
Beals Town
Beddington Town
Calais City
Centerville Town
Charlotte Town
Cherryfield Town
Codyville Plantation
Columbia Falls Town
Columbia Town
Cooper Town
Crawford Town
Cutler Town
Deblois Town
Dennysville Town
East Central Washington Unorg.
East Machias Town
Eastport City
Grand Lake Stream Plantation
Harrington Town
Jonesboro Town
Jonesport Town
Lubec Town
Machias Town
Machiasport Town
Marshfield Town
Meddybemps Town
Milbridge Town
North Washington Unorg.
Northfield Town
Passamaquoddy Indian Township Re
Passamaquoddy Pleasant Point Res
Pembroke Town
Perry Town

MENTAL HEALTH: Maine
Service Area Listing

Service Area Name
Princeton Town
Robbinston Town
Roque Bluffs Town
Steuben Town
Talmadge Town
Topsfield Town
Vanceboro Town
Waite Town
Wesley Town
Whiting Town
Whitneyville Town
Bridgton Town
Parts:
Casco Town
Harrison Town
Naples Town
Sebago Town
Denmark Town
Rumford
Parts:
Carthage Town
South Franklin Unorg.
Weld Town
County—Oxford
Parts:
Andover Town
Byron Town
Dixfield Town
Hanover Town
Mexico Town
Milton Unorg.
Peru Town
Roxbury Town
Rumford Town

MENTAL HEALTH: Maine
Population Group Listing

Population Group
Low Inc—Bridgton MHAa
County—Cumberland
County—Oxford
Low Inc—MHCA 1
County—Aroostook
Parts:
Aroostook Co
County—Penobscot
Parts:
Mt. Chase Town
Patten Town
Stacyvilletown
County—Washington
Parts:
Danforth Town
Low Inc—MHCA 2
County—Penobscot
Parts:
Carroll Town
Chester Town
Drew Town
East Millinocket Town
Kingman Town
Lee Town
Lincoln Town
Mattawamkeagtown
Medway Town
Millinocket Town
Prentiss Town
Springfield Town
Webster Town
Winn Town
Woodville Town

MENTAL HEALTH: Maine
Population Group Listing

Population Group
County—Piscataquis
Parts:
Piscataquis Co
Low Inc—MHCA 3
County—Somerset
Parts:
Somerset Co

MENTAL HEALTH: Maryland
County Listing

County Name
Baltimore City
Facility: Balt City Detention Ctr
Facility: Central Booking & Intake Facility
Facility: Md Recep & Diag Ctr
Facility: Metro Transition Ctr
*Caroline
Service Area: Mid-Shore
*Dorchester
Service Area: Mid-Shore
*Garrett
*Kent
Service Area: Northeastern Shore
*Queen Anne's
Service Area: Northeastern Shore
*Somerset
*Worcester

MENTAL HEALTH: Maryland
Service Area Listing

Service Area Name
Mid-Shore
County—Caroline
County—Dorchester
Northeastern Shore
County—Kent
County—Queen Anne's

MENTAL HEALTH: Maryland
Facility Listing

Facility Name
Balt City Detention Ctr
County—Baltimore City
Central Booking & Intake Facility
County—Baltimore City
Md Recep & Diag Ctr
County—Baltimore City
Metro Transition Ctr
County—Baltimore City

MENTAL HEALTH: Massachusetts
County Listing

County Name
Suffolk
Population Group: Homeless—Dorchester(S)
Population Group: Homeless—Roxbury(S)
Population Group: Homeless—South End(S)
Population Group: Homeless—Downtown(S)
Worcester
Population Group: Low Income—Worcester
Parts:

MENTAL HEALTH: Massachusetts
Service Area Listing

Service Area Name

Parts:
C.T. 901–906
C.T. 912–915
C.T. 918–919
C.T. 923–924
C.T. 1001
C.T. 1101.01–1101.02
Parts:
C.T. 203
C.T. 701–702
Parts:
C.T. 103
C.T. 104.02
C.T. 801–810
C.T. 812–821
C.T. 1203
C.T. 1205
Parts:
C.T. 704
C.T. 710–712
Worcester City

MENTAL HEALTH: Massachusetts
Population Group Listing

Population Group

Homeless—Dorchester(S)
County—Suffolk
Homeless—Downtown(S)
County—Suffolk
Homeless—Roxbury(S)
County—Suffolk
Homeless—South End(S)
County—Suffolk
Low Income—Worcester
County—Worcester

MENTAL HEALTH: Michigan
County Listing

County Name

*Alger
*Antrim
Service Area: Mancelona/Kalkaska
*Arenac
Population Group: Low Inc—Arenac Co
*Baraga
Service Area: Copper Country
*Benzie
Service Area: Manistee
*Branch
*Cass
*Charlevoix
*Cheboygan
*Clare
Service Area: Mt. Pleasant
*Crawford
Service Area: North Central
*Delta
*Dickinson
Service Area: Iron Mountain
*Emmet
Population Group: Low Inc—Emmet Co
*Gladwin
Service Area: Midland/Gladwin
*Gogebic
Service Area: Gogebic
*Gratiot
*Hillsdale
*Houghton
Service Area: Copper Country
*Huron

MENTAL HEALTH: Michigan
County Listing

County Name

*Iosco
Service Area: Au Sable Valley
*Iron
Service Area: Iron Mountain
*Isabella
Service Area: Mt. Pleasant
*Kalkaska
Service Area: Mancelona/Kalkaska
*Keweenaw
Service Area: Copper Country
*Lake
Service Area: Lake/Mason/Oceana
*Leelanau
*Lenawee
*Manistee
Service Area: Manistee
*Mason
Service Area: Lake/Mason/Oceana
*Mecosta
Service Area: Mt. Pleasant
*Menominee
*Midland
Service Area: Midland/Gladwin
*Missaukee
Service Area: North Central
*Montcalm
*Newaygo
*Oceana
Service Area: Lake/Mason/Oceana
*Ogemaw
Service Area: Au Sable Valley
*Ontonagon
Service Area: Copper Country
*Osceola
Service Area: Mt. Pleasant
*Oscoda
Service Area: Au Sable Valley
*Otsego
Ottawa
*Roscommon
Service Area: North Central
*Sanilac
*Schoolcraft
St. Clair
*St. Joseph
*Tuscola
Wayne
Service Area: East Detroit
Service Area: Northwest Detroit
Population Group: Low Inc—Southwest Detroit
*Wexford
Service Area: North Central

MENTAL HEALTH: Michigan
Service Area Listing

Service Area Name

Au Sable Valley
County—Iosco
County—Ogemaw
County—Oscoda
Copper Country
County—Baraga
County—Houghton
County—Keweenaw
County—Ontonagon
East Detroit
County—Wayne
Parts:
C.T. 5004–5005
C.T. 5013

MENTAL HEALTH: Michigan
Service Area Listing

Service Area Name

C.T. 5020
C.T. 5039–5045
C.T. 5121–5124
C.T. 5126
C.T. 5129
C.T. 5132–5136
C.T. 5139–5143
C.T. 5145–5157
C.T. 5161–5164
C.T. 5166–5169
Gogebic
County—Gogebic
Iron Mountain
County—Dickinson
County—Iron
Lake/Mason/Oceana
County—Lake
County—Mason
County—Oceana
Mancelona/Kalkaska
County—Antrim
County—Kalkaska
Manistee
County—Benzie
County—Manistee
Midland/Gladwin
County—Gladwin
County—Midland
Mt. Pleasant
County—Clare
County—Isabella
County—Mecosta
County—Osceola
North Central
County—Crawford
County—Missaukee
County—Roscommon
County—Wexford
Northwest Detroit
County—Wayne
Parts:
C.T. 5341–5347
C.T. 5350–5357
C.T. 5366–5367
C.T. 5371–5373
C.T. 5377–5378
C.T. 5423–5426
C.T. 5451–5454

MENTAL HEALTH: Michigan
Population Group Listing

Population Group

Low Inc—Arenac Co 3
County—Arenac
Low Inc—Emmet Co
County—Emmet
Parts:
Low Income
Low Inc—Southwest Detroit
County—Wayne
Parts:
C.T. 5209
C.T. 5211–5215
C.T. 5221–5222
C.T. 5231–5238
C.T. 5240–5243
C.T. 5251–5258
C.T. 5260–5265

MENTAL HEALTH: Minnesota
County Listing

County Name

*Aitkin
Service Area: Itasca/Koochiching
*Becker
Population Group: Low Inc—Fergus Falls
*Beltrami
Service Area: Bemidji
*Big Stone
Service Area: Montevideo
*Carlton
Population Group: Low Inc—Arrowhead
*Cass
Service Area: Bemidji
*Chippewa
Service Area: Montevideo
*Chisago
Service Area: Cambridge
*Clay
Population Group: Low Inc—Fergus Falls
*Clearwater
Service Area: Bemidji
*Cook
Population Group: Low Inc—Arrowhead
*Cottonwood
Service Area: Worthington
*Dodge
Service Area: Austin-Owatonna
*Douglas
Population Group: Low Inc—Fergus Falls
*Faribault
Service Area: Fairmount
*Freeborn
Service Area: Austin-Owatonna
*Grant
Population Group: Low Inc—Fergus Falls
*Hubbard
Service Area: Bemidji
*Isanti
Service Area: Cambridge
*Itasca
Service Area: Itasca/Koochiching
*Jackson
Service Area: Worthington
*Kanabec
Service Area: Cambridge
*Kittson
Service Area: E Grand Forks
*Koochiching
Service Area: Itasca/Koochiching
*Lac Qui Parle
Service Area: Montevideo
*Lake
Population Group: Low Inc—Arrowhead
*Lake Of The Woods
Service Area: Bemidji
*Le Sueur
Service Area: Austin-Owatonna
*Lincoln
Service Area: Marshall
*Lyon
Service Area: Marshall
*Mahnomen
Service Area: E Grand Forks
*Marshall
Service Area: E Grand Forks
*Martin
Service Area: Fairmount
*Mille Lacs
Service Area: Cambridge
*Mower
Service Area: Austin-Owatonna
*Murray
Service Area: Marshall

MENTAL HEALTH: Minnesota
County Listing

County Name

*Nobles
Service Area: Worthington
*Norman
Service Area: E Grand Forks
*Otter Tail
Population Group: Low Inc—Fergus Falls
*Pennington
Service Area: E Grand Forks
*Pine
Service Area: Cambridge
*Pipestone
Service Area: Worthington
*Polk
Service Area: E Grand Forks
*Pope
Population Group: Low Inc—Fergus Falls
*Red Lake
Service Area: E Grand Forks
*Redwood
Service Area: Marshall
*Renville
Service Area: Montevideo
*Rice
Service Area: Austin-Owatonna
*Rock
Service Area: Worthington
*Roseau
Service Area: Bemidji
St. Louis
Population Group: Low Inc—Arrowhead
*Steele
Service Area: Austin-Owatonna
*Stevens
Population Group: Low Inc—Fergus Falls
*Swift
Service Area: Montevideo
*Traverse
Population Group: Low Inc—Fergus Falls
*Waseca
Service Area: Austin-Owatonna
*Watonwan
Service Area: Fairmount
*Wilkin
Population Group: Low Inc—Fergus Falls
*Yellow Medicine
Service Area: Marshall

MENTAL HEALTH: Minnesota
Service Area Listing

Service Area Name

Austin-Owatonna
County—Dodge
County—Freeborn
County—Le Sueur
County—Mower
County—Rice
County—Steele
County—Waseca
Bemidji
County—Beltrami
County—Cass
County—Clearwater
County—Hubbard
County—Lake Of The Woods
County—Roseau
Cambridge
County—Chisago
County—Isanti
County—Kanabec
County—Mille Lacs
County—Pine

MENTAL HEALTH: Minnesota
Service Area Listing

Service Area Name

E Grand Forks
County—Kittson
County—Mahnomen
County—Marshall
County—Norman
County—Pennington
County—Polk
County—Red Lake
Fairmount
County—Faribault
County—Martin
County—Watonwan
Itasca/Koochiching
County—Aitkin
County—Itasca
County—Koochiching
Marshall
County—Lincoln
County—Lyon
County—Murray
County—Redwood
County—Yellow Medicine
Montevideo
County—Big Stone
County—Chippewa
County—Lac Qui Parle
County—Renville
County—Swift
Worthington
County—Cottonwood
County—Jackson
County—Nobles
County—Pipestone
County—Rock

MENTAL HEALTH: Minnesota
Population Group Listing

Population Group

Low Inc—Arrowhead
County—Carlton
County—Cook
County—Lake
County—St. Louis
Low Inc—Fergus Falls
County—Becker
County—Clay
County—Douglas
County—Grant
County—Otter Tail
County—Pope
County—Stevens
County—Traverse
County—Wilkin

MENTAL HEALTH: Mississippi
County Listing

County Name

*Adams
Service Area: Catchment Area #11
*Alcorn
Service Area: Catchment Area #4
*Amite
Service Area: Catchment Area #11
*Attala
Service Area: Catchment Area #6
*Benton
Service Area: Catchment Area #3
*Bolivar
Service Area: Catchment Area #5
*Calhoun

MENTAL HEALTH: Mississippi
County Listing

County Name

Service Area: Catchment Area #2
*Carroll
Service Area: Catchment Area #6
*Chickasaw
Service Area: Catchment Area #3
*Choctaw
Service Area: Catchment Area #7
*Claiborne
Service Area: Catchment Area #11
*Clarke
Service Area: Catchment Area #10
*Clay
Service Area: Catchment Area #7
*Coahoma
Service Area: Catchment Area #1
*Covington
Service Area: Catchment Area #12
*Desoto
Service Area: Catchment Area #2
*Forrest
Service Area: Catchment Area #12
*Franklin
Service Area: Catchment Area #11
*George
Service Area: Catchment Area #14
*Greene
Service Area: Catchment Area #12
*Grenada
Service Area: Catchment Area #6
*Hancock
Service Area: Catchment Area #13
*Harrison
Service Area: Catchment Area #13
*Holmes
Service Area: Catchment Area #6
*Humphreys
Service Area: Catchment Area #6
*Issaquena
Service Area: Catchment Area #5
*Itawamba
Service Area: Catchment Area #3
*Jackson
Service Area: Catchment Area #14
*Jasper
Service Area: Catchment Area #10
*Jefferson
*Jefferson Davis
Service Area: Catchment Area #11
Service Area: Catchment Area #12
*Jones
Service Area: Catchment Area #12
*Kemper
Service Area: Catchment Area #10
*Lafayette
Service Area: Catchment Area #2
*Lamar
Service Area: Catchment Area #12
*Lauderdale
Service Area: Catchment Area #10
Facility: East Ms State Hospital
*Lawrence
Service Area: Catchment Area #11
*Leake
Service Area: Catchment Area #10
*Lee
Service Area: Catchment Area #3
*Leflore
Service Area: Catchment Area #6
*Lincoln
Service Area: Catchment Area #11
*Lowndes
Service Area: Catchment Area #7

MENTAL HEALTH: Mississippi
County Listing

County Name

*Marion
Service Area: Catchment Area #12
*Marshall
Service Area: Catchment Area #2
*Monroe
Service Area: Catchment Area #3
*Montgomery
Service Area: Catchment Area #6
*Neshoba
Service Area: Catchment Area #10
*Newton
Service Area: Catchment Area #10
*Noxubee
Service Area: Catchment Area #7
*Oktibbeha
Service Area: Catchment Area #7
*Panola
Service Area: Catchment Area #2
*Pearl River
Service Area: Catchment Area #13
*Perry
Service Area: Catchment Area #12
*Pike
Service Area: Catchment Area #11
*Pontotoc
Service Area: Catchment Area #3
*Prentiss
Service Area: Catchment Area #4
*Quitman
Service Area: Catchment Area #1
*Scott
Service Area: Catchment Area #10
*Sharkey
Service Area: Catchment Area #5
*Smith
Service Area: Catchment Area #10
*Stone
Service Area: Catchment Area #13
*Sunflower
Service Area: Catchment Area #6
*Tallahatchie
Service Area: Catchment Area #1
*Tate
Service Area: Catchment Area #2
*Tippah
Service Area: Catchment Area #4
*Tishomingo
Service Area: Catchment Area #4
*Tunica
Service Area: Catchment Area #1
*Union
Service Area: Catchment Area #3
*Walthall
Service Area: Catchment Area #11
*Warren
Service Area: Catchment Area #15
*Washington
Service Area: Catchment Area #5
*Wayne
Service Area: Catchment Area #12
*Webster
Service Area: Catchment Area #7
*Wilkinson
Service Area: Catchment Area #11
*Winston
Service Area: Catchment Area #7
*Yalobusha
Service Area: Catchment Area #2
*Yazoo
Service Area: Catchment Area #15

MENTAL HEALTH: Mississippi
Service Area Listing

Service Area Name

Catchment Area #1
County—Coahoma
County—Quitman
County—Tallahatchie
County—Tunica
Catchment Area #10
County—Clarke
County—Jasper
County—Kemper
County—Lauderdale
County—Leake
County—Neshoba
County—Newton
County—Scott
County—Smith
Catchment Area #11
County—Adams
County—Amite
County—Claiborne
County—Franklin
County—Jefferson
County—Lawrence
County—Lincoln
County—Pike
County—Walthall
County—Wilkinson
Catchment Area #12
County—Covington
County—Forrest
County—Greene
County—Jefferson Davis
County—Jones
County—Lamar
County—Marion
County—Perry
County—Wayne
Catchment Area #13
County—Hancock
County—Harrison
County—Pearl River
County—Stone
Catchment Area #14
County—George
County—Jackson
Catchment Area #15
County—Warren
County—Yazoo
Catchment Area #2
County—Calhoun
County—Desoto
County—Lafayette
County—Marshall
County—Panola
County—Tate
County—Yalobusha
Catchment Area #3
County—Benton
County—Chickasaw
County—Itawamba
County—Lee
County—Monroe
County—Pontotoc
County—Union
Catchment Area #4
County—Alcorn
County—Prentiss
County—Tippah
County—Tishomingo
Catchment Area #5
County—Bolivar
County—Issaquena
County—Sharkey

MENTAL HEALTH: Mississippi
Service Area Listing

Service Area Name

County—Washington
Catchment Area #6
County—Attala
County—Carroll
County—Grenada
County—Holmes
County—Humphreys
County—Leflore
County—Montgomery
County—Sunflower
Catchment Area #7
County—Choctaw
County—Clay
County—Lowndes
County—Noxubee
County—Oktibbeha
County—Webster
County—Winston

MENTAL HEALTH: Mississippi
Facility Listing

Facility Name

East Ms State Hospital
County—Lauderdale

MENTAL HEALTH: Missouri
County Listing

County Name

*Adair
Service Area: Hannibal
*Andrew
Population Group: Low Inc—St. Joseph Catchment Area
*Atchison
Population Group: Low Inc—St. Joseph Catchment Area
*Audrain
Service Area: Mexico
*Barry
Service Area: Nevada
*Barton
Population Group: Low Inc—Joplin Catchment Area
*Bates
Service Area: Nevada
*Benton
Service Area: Nevada
*Bollinger
Service Area: Cape Girardeau
*Buchanan
Population Group: Low Inc—St. Joseph Catchment Area
*Butler
Service Area: Poplar Bluff
*Caldwell
Service Area: Chillicothe
*Callaway
Service Area: Mexico
*Camden
Service Area: Jefferson City
*Cape Girardeau
Service Area: Cape Girardeau
*Carter
Service Area: Poplar Bluff
*Cass
Service Area: Warrensburg
*Cedar
Service Area: Nevada
Christian
Population Group: Low Inc—Springfield

MENTAL HEALTH: Missouri
County Listing

County Name

*Clark
Service Area: Hannibal
*Clinton
Population Group: Low Inc—St. Joseph Catchment Area
*Cole
Service Area: Jefferson City
*Crawford
Service Area: Rolla
*Dade
Service Area: Nevada
*Dallas
Population Group: Low Inc—Springfield
*Daviess
Service Area: Chillicothe
*Dekalb
Population Group: Low Inc—St. Joseph Catchment Area
*Dent
Service Area: Rolla
*Douglas
Service Area: West Plains
*Dunklin
Service Area: Poplar Bluff
*Gasconade
Service Area: Rolla
*Gentry
Population Group: Low Inc—St. Joseph Catchment Area
Greene
Population Group: Low Inc—Springfield
*Grundy
Service Area: Chillicothe
*Harrison
Service Area: Chillicothe
*Henry
Service Area: Nevada
*Hickory
Service Area: Nevada
*Holt
Population Group: Low Inc—St. Joseph Catchment Area
*Howell
Service Area: West Plains
*Iron
Service Area: Rolla
*Jasper
Population Group: Low Inc—Joplin Catchment Area
*Jefferson
Service Area: Cape Girardeau
*Johnson
Service Area: Warrensburg
*Knox
Service Area: Hannibal
*Laclede
Service Area: Jefferson City
*Lafayette
Service Area: Warrensburg
*Lawrence
Service Area: Nevada
*Lewis
Service Area: Hannibal
*Linn
Service Area: Chillicothe
*Livingston
Service Area: Chillicothe
*Macon
Service Area: Hannibal
*Madison
Service Area: Cape Girardeau
*Maries

MENTAL HEALTH: Missouri
County Listing

County Name

Service Area: Rolla
*Marion
Service Area: Hannibal
*McDonald
Population Group: Low Inc—Joplin Catchment Area
*Mercer
Service Area: Chillicothe
*Miller
Service Area: Jefferson City
*Mississippi
Service Area: Sikeston
*Monroe
Service Area: Mexico
*Montgomery
Service Area: Mexico
*Morgan
Service Area: Columbia
*New Madrid
Service Area: Sikeston
*Newton
Population Group: Low Inc—Joplin Catchment Area
*Nodaway
Population Group: Low Inc—St. Joseph Catchment Area
*Oregon
Service Area: West Plains
*Osage
Service Area: Jefferson City
*Ozark
Service Area: West Plains
*Pemiscot
Service Area: Poplar Bluff
*Perry
Service Area: Cape Girardeau
*Pettis
Service Area: Columbia
*Phelps
Service Area: Rolla
*Pike
Service Area: Mexico
*Polk
Population Group: Low Inc—Springfield
*Pulaski
Service Area: Jefferson City
*Putnam
Service Area: Chillicothe
*Ralls
Service Area: Mexico
*Reynolds
Service Area: Poplar Bluff
*Ripley
Service Area: Poplar Bluff
*Saline
Service Area: Columbia
*Schuyler
Service Area: Hannibal
*Scotland
Service Area: Hannibal
*Scott
Service Area: Sikeston
*Shannon
Service Area: West Plains
*Shelby
Service Area: Hannibal
*St. Clair
Service Area: Nevada
*St. Francois
Service Area: Rolla
*Ste. Genevieve
Service Area: Cape Girardeau

MENTAL HEALTH: Missouri
County Listing

County Name

*Stoddard
Service Area: Sikeston
*Stone
Population Group: Low Inc—Springfield
*Sullivan
Service Area: Chillicothe
*Taney
Population Group: Low Inc—Springfield
*Texas
Service Area: West Plains
*Vernon
Service Area: Nevada
*Washington
Service Area: Rolla
*Wayne
Service Area: Poplar Bluff
Webster
Population Group: Low Inc—Springfield
*Worth
Population Group: Low Inc—St. Joseph Catchment Area
*Wright
Service Area: West Plains

MENTAL HEALTH: Missouri
Service Area Listing

Service Area Name

Cape Girardeau
County—Bollinger
County—Cape Girardeau
County—Jefferson
County—Madison
County—Perry
County—Ste. Genevieve
Chillicothe
County—Caldwell
County—Daviess
County—Grundy
County—Harrison
County—Linn
County—Livingston
County—Mercer
County—Putnam
County—Sullivan
Columbia
County—Morgan
County—Pettis
County—Saline
Hannibal
County—Adair
County—Clark
County—Knox
County—Lewis
County—Macon
County—Marion
County—Schuyler
County—Scotland
County—Shelby
Jefferson City
County—Camden
County—Cole
County—Laclede
County—Miller
County—Osage
County—Pulaski
Mexico
County—Audrain
County—Callaway
County—Monroe
County—Montgomery
County—Pike

MENTAL HEALTH: Missouri
Service Area Listing

Service Area Name

County—Ralls
Nevada
County—Barry
County—Bates
County—Benton
County—Cedar
County—Dade
County—Henry
County—Hickory
County—Lawrence
County—St. Clair
County—Vernon
Poplar Bluff
County—Butler
County—Carter
County—Dunklin
County—Pemiscot
County—Reynolds
County—Ripley
County—Wayne
Rolla
County—Crawford
County—Dent
County—Gasconade
County—Iron
County—Maries
County—Phelps
County—St. Francois
County—Washington
Sikeston
County—Mississippi
County—New Madrid
County—Scott
County—Stoddard
Warrensburg
County—Cass
County—Johnson
County—Lafayette
West Plains
County—Douglas
County—Howell
County—Oregon
County—Ozark
County—Shannon
County—Texas
County—Wright

MENTAL HEALTH: Missouri
Population Group Listing

Population Group

Low Inc—Joplin Catchment Area
County—Barton
County—Jasper
County—McDonald
County—Newton
Low Inc—Springfield
County—Christian
County—Dallas
County—Greene
County—Polk
County—Stone
County—Taney
County—Webster
Low Inc—St. Joseph Catchment Area
County—Andrew
County—Atchison
County—Buchanan
County—Clinton
County—Dekalb
County—Gentry
County—Holt

MENTAL HEALTH: Missouri
Population Group Listing

Population Group

County—Nodaway
County—Worth

MENTAL HEALTH: Montana
County Listing

County Name

*Beaverhead
*Big Horn
*Blaine
Service Area: North-Central Montana
*Broadwater
*Carbon
*Carter
Service Area: Eastern Montana
*Chouteau
Service Area: North-Central Montana
*Custer
Service Area: Eastern Montana
*Daniels
Service Area: Eastern Montana
*Dawson
Service Area: Eastern Montana
*Deer Lodge
Service Area: Silver Bow/Deer Lodge
Facility: Mt State Hosp.—Warm Springs
*Fallon
Service Area: Eastern Montana
*Fergus
Service Area: Lewistown
*Garfield
Service Area: Eastern Montana
*Glacier
Service Area: North-Central Montana
*Golden Valley
*Granite
*Hill
Service Area: North-Central Montana
*Jefferson
*Judith Basin
Service Area: Lewistown
*Lake
*Liberty
Service Area: North-Central Montana
*Lincoln
*Madison
*McCone
Service Area: Eastern Montana
*Meagher
*Mineral
*Musselshell
*Park
*Petroleum
Service Area: Lewistown
*Phillips
Service Area: Eastern Montana
*Pondera
Service Area: North-Central Montana
*Powder River
Service Area: Eastern Montana
*Powell (g)
Facility: Montana State Prison
*Prairie
Service Area: Eastern Montana
*Ravalli
*Richland
Service Area: Eastern Montana
*Roosevelt
Service Area: Eastern Montana
*Rosebud
Service Area: Eastern Montana
*Sanders

MENTAL HEALTH: Montana
County Listing

County Name

*Sheridan
Service Area: Eastern Montana
*Silver Bow
Service Area: Silver Bow/Deer Lodge
*Stillwater
*Sweet Grass
*Teton
Service Area: North-Central Montana
*Toole
Service Area: North-Central Montana
*Treasure
Service Area: Eastern Montana
*Valley
Service Area: Eastern Montana
*Wheatland
Service Area: Lewistown
*Wibaux
Service Area: Eastern Montana

MENTAL HEALTH: Montana
Service Area Listing

Service Area Name

Eastern Montana
County—Carter
County—Custer
County—Daniels
County—Dawson
County—Fallon
County—Garfield
County—McCone
County—Phillips
County—Powder River
County—Prairie
County—Richland
County—Roosevelt
County—Rosebud
County—Sheridan
County—Treasure
County—Valley
County—Wibaux
Lewistown
County—Fergus
County—Judith Basin
County—Petroleum
County—Wheatland
North-Central Montana
County—Blaine
County—Chouteau
County—Glacier
County—Hill
County—Liberty
County—Pondera
County—Teton
County—Toole
Silver Bow/Deer Lodge
County—Deer Lodge
County—Silver Bow

MENTAL HEALTH: Montana
Facility Listing

Facility Name

Montana State Prison
County—Powell
Mt State Hosp.—Warm Springs
County—Deer Lodge

MENTAL HEALTH: Nebraska
County Listing

County Name

*Antelope
Service Area: Catchment Area 4
*Arthur
Service Area: Catchment Area 2
*Banner
Service Area: Catchment Area 1
*Boone
Service Area: Catchment Area 4
*Box Butte
Service Area: Catchment Area 1
*Boyd
Service Area: Catchment Area 4
*Brown
Service Area: Catchment Area 4
*Burt
Service Area: Catchment Area 4
*Butler
Service Area: Catchment Area 5
*Cedar
Service Area: Catchment Area 4
*Chase
Service Area: Catchment Area 2
*Cherry
Service Area: Catchment Area 4
*Cheyenne
Service Area: Catchment Area 1
*Colfax
Service Area: Catchment Area 4
*Cuming
Service Area: Catchment Area 4
Dakota
Service Area: Catchment Area 4
*Dawes
Service Area: Catchment Area 1
*Dawson
Service Area: Catchment Area 2
*Deuel
Service Area: Catchment Area 1
*Dixon
Service Area: Catchment Area 4
*Dundy
Service Area: Catchment Area 2
*Fillmore
Service Area: Catchment Area 5
*Frontier
Service Area: Catchment Area 2
*Gage
Service Area: Catchment Area 5
*Garden
Service Area: Catchment Area 1
*Gosper
Service Area: Catchment Area 2
*Grant
Service Area: Catchment Area 2
*Hayes
Service Area: Catchment Area 2
*Hitchcock
Service Area: Catchment Area 2
*Holt
Service Area: Catchment Area 4
*Hooker
Service Area: Catchment Area 2
*Jefferson
Service Area: Catchment Area 5
*Johnson
Service Area: Catchment Area 5
*Keith
Service Area: Catchment Area 2
*Keya Paha
Service Area: Catchment Area 4
*Kimball
Service Area: Catchment Area 1
*Knox
Service Area: Catchment Area 4
Lancaster
Service Area: Catchment Area 5
*Lincoln
Service Area: Catchment Area 2
*Logan
Service Area: Catchment Area 2
*Madison
Service Area: Catchment Area 4
*Morrill
Service Area: Catchment Area 1
*MCPherson
Service Area: Catchment Area 2
*Nance
Service Area: Catchment Area 4
*Nemaha
Service Area: Catchment Area 5
*Otoe
Service Area: Catchment Area 5
*Pawnee
Service Area: Catchment Area 5
*Perkins
Service Area: Catchment Area 2
*Pierce
Service Area: Catchment Area 4
*Platte
Service Area: Catchment Area 4
*Polk
Service Area: Catchment Area 5
*Red Willow
Service Area: Catchment Area 2
*Richardson
Service Area: Catchment Area 5
*Rock
Service Area: Catchment Area 4
*Saline
Service Area: Catchment Area 5
*Saunders
Service Area: Catchment Area 5
*Scotts Bluff
Service Area: Catchment Area 1
*Seward
Service Area: Catchment Area 5
*Sheridan
Service Area: Catchment Area 1
*Sioux
Service Area: Catchment Area 1
*Stanton
Service Area: Catchment Area 4
*Thayer
Service Area: Catchment Area 5
*Thomas
Service Area: Catchment Area 2
*Thurston
Service Area: Catchment Area 4
*Wayne
Service Area: Catchment Area 4
*York
Service Area: Catchment Area 5

MENTAL HEALTH: Nebraska
Service Area Listing

Service Area Name

Catchment Area 1
County—Banner
County—Box Butte
County—Cheyenne
County—Dawes
County—Deuel
County—Garden
County—Kimball

MENTAL HEALTH: Nebraska
Service Area Listing

Service Area Name

County—Morrill
County—Scotts Bluff
County—Sheridan
County—Sioux
Catchment Area 2
County—Arthur
County—Chase
County—Dawson
County—Dundy
County—Frontier
County—Gosper
County—Grant
County—Hayes
County—Hitchcock
County—Hooker
County—Keith
County—Lincoln
County—Logan
County—MCPherson
County—Perkins
County—Red Willow
County—Thomas
Catchment Area 4
County—Antelope
County—Boone
County—Boyd
County—Brown
County—Burt
County—Cedar
County—Cherry
County—Colfax
County—Cuming
County—Dakota
County—Dixon
County—Holt
County—Keya Paha
County—Knox
County—Madison
County—Nance
County—Pierce
County—Platte
County—Rock
County—Stanton
County—Thurston
County—Wayne
Catchment Area 5
County—Butler
County—Fillmore
County—Gage
County—Jefferson
County—Johnson
County—Lancaster
County—Nemaha
County—Otoe
County—Pawnee
County—Polk
County—Richardson
County—Saline
County—Saunders
County—Seward
County—Thayer
County—York

MENTAL HEALTH: Nevada
County Listing

County Name

*Churchill
Clark
Service Area: Mesquite
Service Area: Western Clark County
*Elko

MENTAL HEALTH: Nevada
County Listing

County Name

*Esmeralda
*Eureka
*Humboldt
*Lander
*Lincoln
*Lyon
*Mineral
*Nye
*Pershing
*White Pine

MENTAL HEALTH: Nevada
Service Area Listing

Service Area Name

Mesquite
County—Clark
Parts:
C.T. 56.02–56.03
Western Clark County
County—Clark
Parts:
C.T. 57
C.T. 58.98
C.T. 59

MENTAL HEALTH: New Hampshire
County Listing

County Name

*Carroll
Service Area: Mental Hlth Region I
*Coos
Service Area: Mental Hlth Region I
*Grafton
Service Area: Eastern Grafton (Reg. III)
Service Area: Mental Hlth Region I

MENTAL HEALTH: New Hampshire
Service Area Listing

Service Area Name

Eastern Grafton (Reg. III)
County—Grafton
Parts:
Alexandria Town
Ashland Town
Bridgewater Town
Bristol Town
Campton Town
Ellsworth Town
Groton Town
Hebron Town
Holderness Town
Plymouth Town
Rumney Town
Thornton Town
Wentworth Town
Mental Hlth Region I
County—Carroll
County—Coos
County—Grafton
Parts:
Bath Town
Benton Town
Bethlehem Town
Easton Town
Franconia Town
Haverhill Town
Landaff Town
Lincoln Town
Lisbon Town

MENTAL HEALTH: New Hampshire
Service Area Listing

Service Area Name

Littleton Town
Lyman Town
Monroe Town
Piermont Town
Sugar Hill Town
Warren Town
Waterville Valley Town
Woodstock Town

MENTAL HEALTH: New Jersey
County Listing

County Name

Passaic
Service Area: City Of Passaic
*Salem
Population Group: Low Inc/MSFW Salem

MENTAL HEALTH: New Jersey
Service Area Listing

Service Area Name

City Of Passaic
County—Passaic
Parts:
Passaic City

MENTAL HEALTH: New Jersey
Population Group Listing

Population Group

Low Inc/MSFW Salem
County—Salem

MENTAL HEALTH: New Mexico
County Listing

County Name

Bernalillo
Service Area: North Valley
Service Area: Southwest Valley
*Catron
Service Area: Border MH Service Area
*Chaves
Service Area: Southeastern MH Service Area
*Cibola
*Curry
Service Area: Plains MH Service Area
*Debaca
Service Area: Plains MH Service Area
*Eddy
Service Area: Southeastern MH Service Area
*Grant
Service Area: Border MH Service Area
*Guadalupe
Service Area: Plains MH Service Area
*Harding
Service Area: Plains MH Service Area
*Hidalgo
Service Area: Border MH Service Area
*Lea
Service Area: Southeastern MH Service Area
*Lincoln
Service Area: Southeastern MH Service Area
*Luna
Service Area: Border MH Service Area
*McKinley
Service Area: Catchment Area #1

MENTAL HEALTH: New Mexico
County Listing

County Name

*Otero
Service Area: Southeastern MH Service Area
*Quay
Service Area: Plains MH Service Area
*Rio Arriba
*Roosevelt
Service Area: Plains MH Service Area
*San Juan
Service Area: Catchment Area #1
*San Miguel
Facility: Las Vegas Medical Center
Sandoval
Service Area: Northern Sandoval
*Sierra
Service Area: South Central MH Service Area
*Socorro
Service Area: South Central MH Service Area
*Taos
*Torrance
*Union
Service Area: Plains MH Service Area
Valencia

MENTAL HEALTH: New Mexico
Service Area Listing

Service Area Name

Border MH Service Area
County—Catron
County—Grant
County—Hidalgo
County—Luna
Catchment Area #1
County—McKinley
County—San Juan
North Valley
County—Bernalillo
Parts:
C.T. 29
C.T. 30.01–30.02
C.T. 31
C.T. 32.01–32.02
C.T. 35.01–35.02
C.T. 36
Northern Sandoval
County—Sandoval
Parts:
Cuba CCD
Jemez CCD
Santo Domingo CCD
Plains MH Service Area
County—Curry
County—Debaca
County—Guadalupe
County—Harding
County—Quay
County—Roosevelt
County—Union
South Central MH Service Area
County—Sierra
County—Socorro
Southeastern MH Service Area
County—Chaves
County—Eddy
County—Lea
County—Lincoln
County—Otero
Southwest Valley
County—Bernalillo

MENTAL HEALTH: New Mexico
Service Area Listing

Service Area Name

Parts:
C.T. 23
C.T. 24.01–24.02
C.T. 43
C.T. 44.01–44.02
C.T. 45.01–45.02
C.T. 46.02–46.04

MENTAL HEALTH: New Mexico
Facility Listing

Facility Name

Las Vegas Medical Center 4
County—San Miguel

MENTAL HEALTH: New York
County Listing

County Name

*Allegany
Bronx
Facility: NYC Corr. Fac./Rikers Island
*Cattaraugus
Cayuga
Chautauqua
*Chenango
*Columbia
*Delaware
Erie
Service Area: P.S. 84 Neighborhood
*Essex
*Franklin
*Fulton
*Jefferson
Kings
Facility: Woodhull Mental Health
*Lewis
Livingston
Monroe
Service Area: Jordan (Rochester)
New York
Service Area: Chinatown/Lower Manhattan
Facility: Bellevue Hosp Ctr
Facility: Callen/Lorde Mental Health Clinic
Facility: Ft. Washington—Proj Renewal
Facility: Greenberg Counseling Center
Facility: Holland House—Proj Renewal
Facility: New Providence—Proj Renewal
Facility: Psych Outreach To Homeless
Facility: Renewal On Clinton
Facility: World Trade Center
Facility: Youth Counseling League
*Otsego
Schoharie
*Schuyler
*Seneca
*St. Lawrence
Wayne

MENTAL HEALTH: New York
Service Area Listing

Service Area Name

Chinatown/Lower Manhattan
County—New York
Parts:
C.T. 2.01–2.02
C.T. 6
C.T. 8
C.T. 10.01–10.02
C.T. 12
C.T. 14.01–14.02

MENTAL HEALTH: New York
Service Area Listing

Service Area Name

C.T. 15.01
C.T. 16
C.T. 18
C.T. 22.01
C.T. 25
C.T. 27
C.T. 29
C.T. 30.01
C.T. 41
Jordan (Rochester)
County—Monroe
Parts:
C.T. 7
C.T. 13–15
C.T. 39
C.T. 43
C.T. 48–53
C.T. 55–56
C.T. 80
C.T. 90–92
C.T. 93.01–93.02
C.T. 94.01–94.03
P.S. 84 Neighborhood
County—Erie
Parts:
C.T. 27.02
C.T. 29
C.T. 32.01–32.02
C.T. 33.01–33.02
C.T. 34–36
C.T. 39.01–39.02
C.T. 40.01–40.02
C.T. 41–42
C.T. 44.02
C.T. 52.02
C.T. 64

MENTAL HEALTH: New York
Facility Listing

Facility Name

Bellevue Hosp Ctr
County—New York
Callen/Lorde Mental Health Clinic
County—New York
Ft. Washington—Proj Renewal
County—New York
Greenberg Counseling Center
County—New York
Holland House—Proj Renewal
County—New York
New Providence—Proj Renewal
County—New York
NYC Corr. Fac./Rikers Island
County—Bronx
Psych Outreach To Homeless
County—New York
Renewal On Clinton
County—New York
Woodhull Mental Health
County—Kings
World Trade Center
County—New York
Youth Counseling League
County—New York

MENTAL HEALTH: North Carolina
County Listing

County Name

*Beaufort
Service Area: Tideland

MENTAL HEALTH: North Carolina
County Listing

County Name

*Bertie
Service Area: Roanoke-Chowan
*Bladen
Service Area: Southeast Regional
*Brunswick
Burke
Facility: Broughton Hospital
Caldwell
*Camden
Service Area: Albemarle
*Cherokee
Service Area: Smokey Mountain
*Chowan
Service Area: Albemarle
*Clay
Service Area: Smokey Mountain
*Columbus
Service Area: Southeast Regional
*Currituck
Service Area: Albemarle
*Dare
Service Area: Albemarle
*Duplin
Service Area: Duplin-Sampson
*Edgecombe
Population Group: Low Inc—Edgecombe/Nash
*Gates
Service Area: Roanoke-Chowan
*Graham
Service Area: Smokey Mountain
*Halifax
Service Area: Halifax MHCA
*Haywood
Service Area: Smokey Mountain
*Hertford
Service Area: Roanoke-Chowan
*Hyde
Service Area: Tideland
*Jackson
Service Area: Smokey Mountain
*Macon
Service Area: Smokey Mountain
*Martin
Service Area: Tideland
*Nash
Population Group: Low Inc—Edgecombe/Nash
*Northampton
Service Area: Roanoke-Chowan
*Pasquotank
Service Area: Albemarle
*Pender
*Pender
Population Group: Low Inc—Pender Co
Population Group: Low Inc—Pender Co
*Perquimans
Service Area: Albemarle
*Robeson
Service Area: Southeast Regional
*Sampson
Service Area: Duplin-Sampson
*Scotland
Service Area: Southeast Regional
*Surry
Service Area: Surry-Yadkin
*Swain
Service Area: Smokey Mountain
*Tyrrell
Service Area: Tideland
*Vance
Facility: FCI—Butner

MENTAL HEALTH: North Carolina
County Listing

County Name

*Washington
Service Area: Tideland
*Yadkin
Service Area: Surry-Yadkin

MENTAL HEALTH: North Carolina
Service Area Listing

Service Area Name

Albemarle
County—Camden
County—Chowan
County—Currituck
County—Dare
County—Pasquotank
County—Perquimans
Duplin-Sampson
County—Duplin
County—Sampson
Halifax MHCA
County—Halifax
Roanoke-Chowan
County—Bertie
County—Gates
County—Hertford
County—Northampton
Smokey Mountain
County—Cherokee
County—Clay
County—Graham
County—Haywood
County—Jackson
County—Macon
County—Swain
Southeast Regional
County—Bladen
County—Columbus
County—Robeson
County—Scotland
Surry-Yadkin
County—Surry
County—Yadkin
Tideland
County—Beaufort
County—Hyde
County—Martin
County—Tyrrell
County—Washington

MENTAL HEALTH: North Carolina
Population Group Listing

Population Group

Low Inc—Edgecombe/Nash
County—Edgecombe
County—Nash
Low Inc—Pender Co
County—Pender

MENTAL HEALTH: North Carolina
Facility Listing

Facility Name

Broughton Hospital
County—Burke
FCI—Butner
County—Vance

MENTAL HEALTH: North Dakota
County Listing

County Name

*Adams

MENTAL HEALTH: North Dakota
County Listing

County Name

*Barnes
Service Area: Jamestown (Ca 38004)
*Benson
Service Area: Devils Lake Catchment Area
*Billings
*Bottineau
*Bowman
*Burke
Cass
Facility: Family Health Care Center
Facility: SE Human Service Center
*Cavalier
Service Area: Devils Lake Catchment Area
*Dickey
Service Area: Jamestown (Ca 38004)
*Divide
*Dunn
*Eddy
Service Area: Devils Lake Catchment Area
*Emmons
*Foster
Service Area: Jamestown (Ca 38004)
*Golden Valley
*Grant
*Griggs
Service Area: Jamestown (Ca 38004)
*Hettinger
*Kidder
*Lamoure
Service Area: Jamestown (Ca 38004)
*Logan
Service Area: Jamestown (Ca 38004)
*McIntosh
Service Area: Jamestown (Ca 38004)
*McKenzie
*McLean
*Mercer
*Mountrail
*Nelson
*Oliver
*Pembina
*Pierce
*Ramsey
Service Area: Devils Lake Catchment Area
*Ransom
*Renville
*Richland
*Rolette
Service Area: Devils Lake Catchment Area
*Sargent
*Sheridan
*Sioux
*Slope
*Steele
*Stutsman
Service Area: Jamestown (Ca 38004)
Facility: North Dakota State Hosp
*Towner
Service Area: Devils Lake Catchment Area
*Traill
*Walsh
*Wells
Service Area: Jamestown (Ca 38004)
*Williams
Facility: Northwest Human Service Ctr

MENTAL HEALTH: North Dakota
Service Area Listing

Service Area Name

Devils Lake Catchment Area
County—Benson

MENTAL HEALTH: North Dakota
Service Area Listing

Service Area Name

County—Cavalier
County—Eddy
County—Ramsey
County—Rolette
County—Towner
Jamestown (Ca 38004)
County—Barnes
County—Dickey
County—Foster
County—Griggs
County—Lamoure
County—Logan
County—McIntosh
County—Stutsman
County—Wells

MENTAL HEALTH: North Dakota
Facility Listing

Facility Name

Family Health Care Center
County—Cass
North Dakota State Hosp
County—Stutsman
Northwest Human Service Ctr
County—Williams
SE Human Service Center
County—Cass

MENTAL HEALTH: Ohio
County Listing

County Name

*Adams
*Ashtabula
Facility: Lake Erie Corr Inst
*Athens
Service Area: Catchment Area #33
*Belmont
Service Area: Catchment Area #8
*Brown
*Clinton
Columbiana
Crawford
Cuyahoga
Service Area: West Side Cleveland Ca
Facility: Cleveland Psych Inst
*Gallia
Service Area: Catchment Area #35
*Harrison
Service Area: Catchment Area #8
*Hocking
Service Area: Catchment Area #33
*Holmes
Service Area: Wayne/Holmes (C.A. 53)
*Jackson
Service Area: Catchment Area #35
Lawrence
Lorain
Facility: Grafton Corr Fac
*Marion
*Meigs
Service Area: Catchment Area #35
*Monroe
Service Area: Catchment Area #8
*Scioto (g)
Facility: S Ohio Corr Fac
Stark
Facility: Massillon State Hosp
*Vinton
Service Area: Catchment Area #33
*Wayne
Service Area: Wayne/Holmes (C.A. 53)

MENTAL HEALTH: Ohio
Service Area Listing

Service Area Name

Catchment Area #33
County—Athens
County—Hocking
County—Vinton
Catchment Area #35
County—Gallia
County—Jackson
County—Meigs
Catchment Area #8
County—Belmont
County—Harrison
County—Monroe
Wayne/Holmes (C.A. 53)
County—Holmes
County—Wayne
West Side Cleveland Ca
County—Cuyahoga
Parts:
C.T. 1011.01
C.T. 1012–1019
C.T. 1021.01–1021.02
C.T. 1022–1023
C.T. 1024.01–1024.02
C.T. 1025–1029
C.T. 1031–1032
C.T. 1032.99–1033.00
C.T. 1033.99–1034.00
C.T. 1035–1039
C.T. 1041–1042
C.T. 1042.99–1043.00
C.T. 1044–1046
C.T. 1047.01–1047.02
C.T. 1048–1049
C.T. 1051–1055
C.T. 1056.01–1056.02

MENTAL HEALTH: Ohio
Facility Listing

Facility Name

Cleveland Psych Inst 4
County—Cuyahoga
Grafton Corr Fac
County—Lorain
Lake Erie Corr Inst
County—Ashtabula
Massillon State Hosp
County—Stark
S Ohio Corr Fac
County—Scioto

MENTAL HEALTH: Oklahoma
County Listing

County Name

*Adair
Service Area: Catchment Area #21
*Alfalfa
Service Area: Service Area 10
*Atoka
Service Area: Catchment Area #6
*Beaver
Service Area: Service Area 10
*Beckham
Service Area: Catchment Area #9
*Blaine
Service Area: Catchment Area #9
*Bryan
Service Area: Catchment Area #7
*Carter
Service Area: Catchment Area #7
*Cherokee

MENTAL HEALTH: Oklahoma
County Listing

County Name

Service Area: Catchment Area #21
*Choctaw
Service Area: Catchment Area #6
*Cimarron
Service Area: Service Area 10
*Coal
Service Area: Catchment Area #6
*Craig
Facility: Eastern State Mental Hospital
*Creek
Service Area: Catchment Area #13
*Custer
Service Area: Catchment Area #9
*Dewey
Service Area: Catchment Area #9
*Ellis
Service Area: Service Area 10
*Garfield
Service Area: Catchment Area 12
*Garvin
Service Area: Catchment Area #7
*Grant
Service Area: Catchment Area 12
*Greer
Service Area: Catchment Area #9
*Harper
Service Area: Service Area 10
*Haskell
Service Area: Catchment Area #6
*Hughes
Service Area: Catchment Area #6
*Johnston
Service Area: Catchment Area #7
*Kay
Service Area: Catchment Area #11
*Kingfisher
Service Area: Catchment Area 12
*Kiowa
Service Area: Catchment Area #9
*Latimer
Service Area: Catchment Area #6
*Le Flore
Service Area: Catchment Area #6
*Logan
Service Area: Catchment Area 12
*Love
Service Area: Catchment Area #7
*Major
Service Area: Service Area 10
*Marshall
Service Area: Catchment Area #7
*McCurtain
Service Area: Catchment Area #6
*Murray
Service Area: Catchment Area #7
*Noble
Service Area: Catchment Area #11
*Okfuskee
Service Area: Catchment Area #13
*Okmulgee
Service Area: Catchment Area #13
*Osage
Service Area: Catchment Area #11
*Pawnee
Service Area: Catchment Area #11
*Payne
Service Area: Catchment Area #11
*Pittsburg
Service Area: Catchment Area #6
*Pontotoc
Service Area: Catchment Area #7
*Pushmataha

MENTAL HEALTH: Oklahoma
County Listing

County Name

Service Area: Catchment Area #6
*Roger Mills
Service Area: Catchment Area #9
*Seminole
Service Area: Catchment Area #7
*Sequoyah
Service Area: Catchment Area #21
*Texas
Service Area: Service Area 10
*Wagoner
Service Area: Catchment Area #21
*Washita
Service Area: Catchment Area #9
*Woods
Service Area: Service Area 10
*Woodward
Service Area: Service Area 10

MENTAL HEALTH: Oklahoma
Service Area Listing

Service Area Name

Catchment Area 12
County—Garfield
County—Grant
County—Kingfisher
County—Logan
Catchment Area #11
County—Kay
County—Noble
County—Osage
County—Pawnee
County—Payne
Catchment Area #13
County—Creek
County—Okfuskee
County—Okmulgee
Catchment Area #21
County—Adair
County—Cherokee
County—Sequoyah
County—Wagoner
Catchment Area #6
County—Atoka
County—Choctaw
County—Coal
County—Haskell
County—Hughes
County—Latimer
County—Le Flore
County—McCurtain
County—Pittsburg
County—Pushmataha
Catchment Area #7
County—Bryan
County—Carter
County—Garvin
County—Johnston
County—Love
County—Marshall
County—Murray
County—Pontotoc
County—Seminole
Catchment Area #9
County—Beckham
County—Blaine
County—Custer
County—Dewey
County—Greer
County—Kiowa
County—Roger Mills
County—Washita

MENTAL HEALTH: Oklahoma
Service Area Listing

Service Area Name

Service Area 10
County—Alfalfa
County—Beaver
County—Cimarron
County—Ellis
County—Harper
County—Major
County—Texas
County—Woods
County—Woodward

MENTAL HEALTH: Oklahoma
Facility Listing

Facility Name

Eastern State Mental Hospital
County—Craig

MENTAL HEALTH: Oregon
County Listing

County Name

*Baker
Service Area: Northeastern Oregon
*Clatsop
*Coos
Service Area: Catchment Area 14
*Crook
Service Area: Central Oregon
*Curry
Service Area: Catchment Area 14
*Douglas
*Gilliam
Service Area: East Columbia
*Grant
Service Area: East Columbia
*Harney
Service Area: Southeastern Oregon
*Hood River
Service Area: Mid Columbia Region
*Jefferson
Service Area: Central Oregon
*Josephine
*Klamath
*Klamath
Service Area: Southcentral Oregon
Service Area: Southcentral Oregon
*Lake
*Lake
Service Area: Southcentral Oregon
Service Area: Southcentral Oregon
*Lincoln
*Malheur
Service Area: Southeastern Oregon
*Marion
Population Group: Low Inc/MFW/Homeless—Marion And Polk C
*Morrow
Service Area: East Columbia
*Polk
Population Group: Low Inc/MFW/Homeless—Marion And Polk C
*Sherman
Service Area: Mid Columbia Region
*Tillamook
*Umatilla
Service Area: East Columbia
*Union
Service Area: Northeastern Oregon
*Wallowa
Service Area: Northeastern Oregon
*Wasco

MENTAL HEALTH: Oregon
County Listing

County Name

Service Area: Mid Columbia Region
*Wheeler
Service Area: East Columbia

MENTAL HEALTH: Oregon
Service Area Listing

Service Area Name

Catchment Area 14
County—Coos
County—Curry
Central Oregon
County—Crook
County—Jefferson
East Columbia
County—Gilliam
County—Grant
County—Morrow
County—Umatilla
County—Wheeler
Mid Columbia Region
County—Hood River
County—Sherman
County—Wasco
Northeastern Oregon
County—Baker
County—Union
County—Wallowa
Southcentral Oregon
County—Klamath
County—Lake
County—Lake
Southeastern Oregon
County—Harney
County—Malheur

MENTAL HEALTH: Oregon
Population Group Listing

Population Group

Low Inc/MFW/Homeless—Marion And Polk C
County—Marion
County—Polk

MENTAL HEALTH: Pennsylvania
County Listing

County Name

*Adams
Population Group: Low Inc—Gettysburg/Hanover
*Armstrong
*Beaver
Population Group: Low Income—Beaver Co
*Bradford
Carbon
*Clearfield
Population Group: Low Income—Clearfield Co
Facility: SCI Houtzdale
*Clinton
Cumberland
Facility: SCI Camp Hill
Fayette
*Forest
*Franklin
*Greene
*Huntingdon
Service Area: Huntingdon/Juniata/Mifflin
*Juniata
Service Area: Huntingdon/Juniata/Mifflin

MENTAL HEALTH: Pennsylvania
County Listing

County Name

Lackawanna
  Population Group: Low Income—Northern Lackawana
Lancaster
  Population Group: Low Inc—Welsh Mountain Ca
  Population Group: Low Inc—Lancaster City
Lycoming
  Facility: SCI Muncy
*Mifflin
  Service Area: Huntingdon/Juniata/Mifflin
Monroe
*Pike
*Potter
*Schuylkill
*Susquehanna
  Service Area: Susquehanna/Wayne
*Warren
*Wayne
  Service Area: Susquehanna/Wayne
  Facility: Forensic Treatment Ctr
Wyoming
York
  Population Group: Low Inc—Gettysburg/Hanover

MENTAL HEALTH: Pennsylvania
Service Area Listing

Service Area Name

Huntingdon/Juniata/Mifflin
  County—Huntingdon
  County—Juniata
  County—Mifflin
    Parts:
      Bart Township
    Parts:
      Brecknock Township
      Caernarvon Township
      Christiana Borough
      Colerain Township
      Earl Township
      East Earl Township
      Eden Township
      Leacock Township
      Little Britain Township
      New Holland Borough
      Paradise Township
      Quarryville Borough
      Sadsbury Township
      Salisbury Township
      Terre Hill Borough
      Archbald Borough
    Parts:
      Blakely Borough
      Carbondale City
      Carbondale Township
      Fell Township
      Greenfield Township
      Jefferson Township
      Jermyn Borough
      Jessup Borough
      Mayfield Borough
      Olyphant Borough
      Scott Township
      Vandling Borough
Punxsutawney
    Parts:
      Banks Township
      Canoe Township
      Glen Campbell Borough
      North Mahoning Township

MENTAL HEALTH: Pennsylvania
Service Area Listing

Service Area Name

    Smicksburg Borough
    West Mahoning Township
    Beaver Township
  Parts:
    Bell Township
    Big Run Borough
    Gaskill Township
    Henderson Township
    McCalmont Township
    Oliver Township
    Perry Township
    Porter Township
    Punxsutawney Borough
    Ringgold Township
    Timblin Borough
    Worthville Borough
    Young Township
Susquehanna/Wayne
  County—Susquehanna
  County—Wayne

MENTAL HEALTH: Pennsylvania
Population Group Listing

Population Group

Low Inc—Gettysburg/Hanover
  County—Adams
  County—York
    Parts:
      Hanover Borough
      Paradise Township
      Washington Township
Low Inc—Lancaster City
  County—Lancaster
    Parts:
      C.T. 1
      C.T. 4–10
      C.T. 14–16
Low Inc—Welsh Mountain Ca
  County—Lancaster
Low Income—Beaver Co
  County—Beaver
Low Income—Clearfield Co
  County—Clearfield
Low Income—Northern Lackawana
  County—Lackawanna

MENTAL HEALTH: Pennsylvania
Facility Listing

Facility Name

Forensic Treatment Ctr
  County—Wayne
SCI Camp Hill
  County—Cumberland
SCI Houtzdale
  County—Clearfield
SCI Muncy
  County—Lycoming

MENTAL HEALTH: Rhode Island
County Listing

County Name

Washington
  Population Group: Narragansett Indian Tribe
    Parts:

MENTAL HEALTH: Rhode Island
Service Area Listing

Service Area Name

Charlestown Town

MENTAL HEALTH: Rhode Island
Population Group Listing

Population Group

Narragansett Indian Tribe
  County—Washington

MENTAL HEALTH: South Carolina
County Listing

County Name

*Abbeville
  Service Area: Catchment Area 5
*Allendale
  Population Group: Low Inc—Catchment Area 11
*Anderson
  Population Group: Low Inc—Catchment Area 1
  Facility: Patrick B. Harris Psychiatric Hospital
*Bamberg
  Service Area: Catchment Area 14
*Barnwell
  Population Group: Low Inc—Catchment Area 10
*Beaufort
  Population Group: Low Inc—Catchment Area 11
*Berkeley
  Service Area: Catchment Area 8B
*Calhoun
  Service Area: Catchment Area 14
*Charleston
  Population Group: Low Inc—Catchment Area 15
*Cherokee
  Service Area: Catchment Area 3
*Chester
  Service Area: Catchment Area 4
*Chesterfield
  Service Area: Catchment Area 12
*Clarendon
  Service Area: Catchment Area 9
*Colleton
  Population Group: Low Inc—Catchment Area 11
*Darlington
  Service Area: Catchment Area 7
*Dillon
  Service Area: Catchment Area 12
*Dorchester
  Population Group: Low Inc—Catchment Area 15
*Edgefield
  Service Area: Catchment Area 5
*Fairfield
*Florence
  Service Area: Catchment Area 7
Greenville
  Population Group: Low Inc—Catchment Area 2
*Greenwood
  Service Area: Catchment Area 5
*Hampton
  Population Group: Low Inc—Catchment Area 11
*Jasper
  Population Group: Low Inc—Catchment Area 11

MENTAL HEALTH: South Carolina
County Listing

County Name

*Kershaw
Service Area: Catchment Area 9
*Lancaster
Service Area: Catchment Area 4
*Laurens
Service Area: Catchment Area 5
*Lee
Service Area: Catchment Area 9
*Marion
Service Area: Catchment Area 7
*Marlboro
Service Area: Catchment Area 12
*McCormick
Service Area: Catchment Area 5
*Newberry
Service Area: Catchment Area 5
*Oconee
Population Group: Low Inc—Catchment Area 1
*Orangeburg
Service Area: Catchment Area 14
*Pickens
Population Group: Low Inc—Catchment Area 1
Richland
Facility: G. Werber Bryan Psychiatric Hospital
Facility: William S. Hall Institute
*Saluda
Service Area: Catchment Area 5
*Spartanburg
Service Area: Catchment Area 3
*Sumter
Service Area: Catchment Area 9
*Union
Service Area: Catchment Area 3
*Williamsburg
Service Area: Catchment Area 13
*York
Service Area: Catchment Area 4

MENTAL HEALTH: South Carolina
Service Area Listing

Service Area Name

Catchment Area 12
County—Chesterfield
County—Dillon
County—Marlboro
Catchment Area 13
County—Williamsburg
Catchment Area 14
County—Bamberg
County—Calhoun
County—Orangeburg
Catchment Area 3
County—Cherokee
County—Spartanburg
County—Union
Catchment Area 4
County—Chester
County—Lancaster
County—York
Catchment Area 5
County—Abbeville
County—Edgefield
County—Greenwood
County—Laurens
County—McCormick
County—Newberry
County—Saluda
Catchment Area 7

MENTAL HEALTH: South Carolina
Service Area Listing

Service Area Name

County—Darlington
County—Florence
County—Marion
Catchment Area 8B
County—Berkeley
Catchment Area 9
County—Clarendon
County—Kershaw
County—Lee
County—Sumter

MENTAL HEALTH: South Carolina
Population Group Listing

Population Group

Low Inc—Catchment Area 10
Parts:
Aiken Co
County—Barnwell
Parts:
Low Income
Low Inc—Catchment Area 15
County—Charleston
County—Dorchester
Low Inc—Catchment Area 2
County—Greenville
Parts:
C.T. 1–10
C.T. 11.01–11.02
C.T. 12.01–12.02
C.T. 13.01–13.02
C.T. 14
C.T. 15.01–15.02
C.T. 16–17
C.T. 18.02–18.06
C.T. 19
C.T. 21.03–21.08
C.T. 22.01–22.02
C.T. 23.01–23.04
C.T. 27
C.T. 37.01–37.02
C.T. 37.04–37.05
C.T. 38.01–38.02
C.T. 39.02–39.04
C.T. 40–41
Low Inc—Catchment Area 11
County—Allendale
Parts:
Allendale Co
County—Beaufort
Parts:
Low Income
County—Colleton
Parts:
Low Income
County—Hampton
Parts:
Low Income
County—Jasper
Parts:
Low Income
Low Inc—Catchment Area 1
County—Anderson
County—Oconee
County—Pickens

MENTAL HEALTH: South Carolina
Facility Listing

Facility Name

G. Werber Bryan Psychiatric Hospital
County—Richland

MENTAL HEALTH: South Carolina
Facility Listing

Facility Name

Patrick B. Harris Psychiatric Hospital
County—Anderson
William S. Hall Institute
County—Richland

MENTAL HEALTH: South Dakota
County Listing

County Name

*Aurora
Service Area: Catchment Area 4
*Beadle
Service Area: Catchment Area 3
*Bon Homme
Service Area: Catchment Area 12
Facility: Sd State Pen.—Bon Homme
*Brookings
Service Area: Catchment Area 1
*Brown
*Brule
Service Area: Catchment Area 4
*Buffalo
Service Area: Catchment Area 2
*Campbell
*Charles Mix
Service Area: Catchment Area 12
*Clark
Service Area: Catchment Area 5
*Clay
Service Area: Catchment Area 12
*Codington
Service Area: Catchment Area 5
*Corson
Service Area: Catchment Area 8
*Davison
Service Area: Catchment Area 4
*Day
*Deuel
Service Area: Catchment Area 5
*Dewey
Service Area: Catchment Area 8
*Douglas
Service Area: Catchment Area 12
*Edmunds
*Faulk
*Grant
Service Area: Catchment Area 5
*Gregory
Service Area: Catchment Area 10
*Haakon
Service Area: Catchment Area 2
*Hamlin
Service Area: Catchment Area 5
*Hand
Service Area: Catchment Area 3
*Hanson
Service Area: Catchment Area 4
*Hughes
Service Area: Catchment Area 2
*Hutchinson
Service Area: Catchment Area 12
*Hyde
Service Area: Catchment Area 2
*Jerauld
Service Area: Catchment Area 3
*Jones
Service Area: Catchment Area 2
*Kingsbury
Service Area: Catchment Area 5
*Lake
Service Area: Catchment Area 3
*Lyman

MENTAL HEALTH: South Dakota
County Listing

County Name

Service Area: Catchment Area 2
*Marshall
*Mellette
Service Area: Catchment Area 10
*Miner
Service Area: Catchment Area 3
Minnehaha
Facility: Sd State Pen.—Minnehaha
*Moody
Service Area: Catchment Area 1
*MCPherson
*Perkins
Service Area: Catchment Area 8
*Potter
*Roberts
Service Area: Catchment Area 5
*Sanborn
Service Area: Catchment Area 4
*Spink (g)
Facility: Redfield State Hospital
*Stanley
Service Area: Catchment Area 2
*Sully
Service Area: Catchment Area 2
*Todd
Service Area: Catchment Area 10
*Tripp
Service Area: Catchment Area 10
*Union
Service Area: Catchment Area 12
*Walworth
*Yankton
Service Area: Catchment Area 12
Facility: South Dakota Human Srv Ctr
*Ziebach
Service Area: Catchment Area 8

MENTAL HEALTH: South Dakota
Service Area Listing

Service Area Name

Catchment Area 1
County—Brookings
County—Moody
Catchment Area 10
County—Gregory
County—Mellette
County—Todd
County—Tripp
Catchment Area 12
County—Bon Homme
County—Charles Mix
County—Clay
County—Douglas
County—Hutchinson
County—Union
County—Yankton
Catchment Area 2
County—Buffalo
County—Haakon
County—Hughes
County—Hyde
County—Jones
County—Lyman
County—Stanley
County—Sully
Catchment Area 3
County—Beadle
County—Hand
County—Jerauld
County—Lake
County—Miner

MENTAL HEALTH: South Dakota
Service Area Listing

Service Area Name

Catchment Area 4
County—Aurora
County—Brule
County—Davison
County—Hanson
County—Sanborn
Catchment Area 5
County—Clark
County—Codington
County—Deuel
County—Grant
County—Hamlin
County—Kingsbury
County—Roberts
Catchment Area 7
Catchment Area 8
County—Corson
County—Dewey
County—Perkins
County—Ziebach

MENTAL HEALTH: South Dakota
Facility Listing

Facility Name

Redfield State Hospital
County—Spink
Sd State Pen.—Bon Homme
County—Bon Homme
Sd State Pen.—Minnehaha
County—Minnehaha
South Dakota Human Srv Ctr
County—Yankton

MENTAL HEALTH: Tennessee
County Listing

County Name

*Bedford
Population Group: Low Inc—Catchment Area 19
*Benton
Population Group: Low Inc—Catchment Area 21
*Bledsoe
Population Group: Low Inc—Catchment Area 12
*Bradley
Population Group: Low Inc—Catchment Area 10
*Cannon
Service Area: Catchment Area 9
*Carroll
Population Group: Low Inc—Catchment Area 21
*Cheatham
Population Group: Low Inc—Catchment Area 14
*Chester
Service Area: Catchment Area 24
*Claiborne
Population Group: Low Inc—Catchment Area 5
*Clay
Service Area: Catchment Area 9
*Cocke
Population Group: Low Inc—Catchment Area 5
*Coffee
Population Group: Low Inc—Catchment Area 19
*Crockett

MENTAL HEALTH: Tennessee
County Listing

County Name

Service Area: Catchment Area 22
*Cumberland
Service Area: Catchment Area 9
*Decatur
Service Area: Catchment Area 24
*Dekalb
Service Area: Catchment Area 9
*Dickson
Population Group: Low Inc—Catchment Area 14
*Dyer
Service Area: Catchment Area 22
*Fayette
Service Area: Catchment Area 25
*Fentress
Service Area: Catchment Area 9
*Franklin
Population Group: Low Inc—Catchment Area 19
*Gibson
Population Group: Low Inc—Catchment Area 21
*Giles
Service Area: Catchment Area 20
*Grainger
Population Group: Low Inc—Catchment Area 5
*Greene
Population Group: Low Inc—Catchment Area 4
*Grundy
Population Group: Low Inc—Catchment Area 12
*Hamblen
Population Group: Low Inc—Catchment Area 5
*Hancock
Population Group: Low Inc—Catchment Area 4
*Hardeman
Service Area: Catchment Area 24
*Hardin
Service Area: Catchment Area 24
*Hawkins
Population Group: Low Inc—Catchment Area 4
*Haywood
Service Area: Catchment Area 23
*Henderson
Service Area: Catchment Area 23
*Henry
Population Group: Low Inc—Catchment Area 21
*Hickman
Service Area: Catchment Area 20
*Houston
Population Group: Low Inc—Catchment Area 14
*Humphreys
Population Group: Low Inc—Catchment Area 14
*Jackson
Service Area: Catchment Area 9
*Jefferson
Population Group: Low Inc—Catchment Area 5
*Lake
Service Area: Catchment Area 22
*Lauderdale
Service Area: Catchment Area 25
*Lawrence
Service Area: Catchment Area 20

MENTAL HEALTH: Tennessee
County Listing

County Name

*Lewis
Service Area: Catchment Area 20
*Lincoln
Population Group: Low Inc—Catchment Area 19
*Macon
Service Area: Catchment Area 9
*Madison
Service Area: Catchment Area 23
*Marion
Population Group: Low Inc—Catchment Area 12
*Marshall
Service Area: Catchment Area 20
*Maury
Service Area: Catchment Area 20
*McMinn
Population Group: Low Inc—Catchment Area 10
*McNairy
Service Area: Catchment Area 24
*Meigs
Population Group: Low Inc—Catchment Area 10
*Montgomery
Population Group: Low Inc—Catchment Area 14
*Moore
Population Group: Low Inc—Catchment Area 19
*Obion
Service Area: Catchment Area 22
*Overton
Service Area: Catchment Area 9
*Perry
Service Area: Catchment Area 20
*Pickett
Service Area: Catchment Area 9
*Polk
Population Group: Low Inc—Catchment Area 10
*Putnam
Service Area: Catchment Area 9
*Rhea
Population Group: Low Inc—Catchment Area 12
*Robertson
Population Group: Low Inc—Catchment Area 14
*Sequatchie
Population Group: Low Inc—Catchment Area 12
*Shelby
Population Group: Low Inc—Shelby
*Smith
Service Area: Catchment Area 9
*Stewart
Population Group: Low Inc—Catchment Area 14
*Sumner
Service Area: Catchment Area 31
*Tipton
Service Area: Catchment Area 25
*Trousdale
Service Area: Catchment Area 31
*Union
Population Group: Low Inc—Catchment Area 5
*Van Buren
Service Area: Catchment Area 9
*Warren
Service Area: Catchment Area 9

MENTAL HEALTH: Tennessee
County Listing

County Name

*Wayne
Service Area: Catchment Area 20
*Weakley
Service Area: Catchment Area 22
*White
Service Area: Catchment Area 9
*Wilson
Service Area: Catchment Area 31

MENTAL HEALTH: Tennessee
Service Area Listing

Service Area Name

Catchment Area 20
County—Giles
County—Hickman
County—Lawrence
County—Lewis
County—Marshall
County—Maury
County—Perry
County—Wayne
Catchment Area 22
County—Crockett
County—Dyer
County—Lake
County—Obion
County—Weakley
Catchment Area 23
County—Haywood
County—Henderson
County—Madison
Catchment Area 24
County—Chester
County—Decatur
County—Hardeman
County—Hardin
County—McNairy
Catchment Area 25
County—Fayette
County—Lauderdale
County—Tipton
Catchment Area 31
County—Sumner
County—Trousdale
County—Wilson
Catchment Area 9
County—Cannon
County—Clay
County—Cumberland
County—Dekalb
County—Fentress
County—Jackson
County—Macon
County—Overton
County—Pickett
County—Putnam
County—Smith
County—Van Buren
County—Warren
County—White

MENTAL HEALTH: Tennessee
Population Group Listing

Population Group

Low Inc—Catchment Area 4
County—Greene
County—Hancock
County—Hawkins
Low Inc—Catchment Area 21
County—Benton

MENTAL HEALTH: Tennessee
Population Group Listing

Population Group

County—Carroll
County—Gibson
County—Henry
Low Inc—Catchment Area 19
County—Bedford
County—Coffee
County—Franklin
County—Lincoln
County—Moore
Low Inc—Catchment Area 10
County—Bradley
County—McMinn
County—Meigs
County—Polk
Low Inc—Catchment Area 12
County—Bledsoe
County—Grundy
County—Marion
County—Rhea
County—Sequatchie
Low Inc—Catchment Area 14
County—Cheatham
County—Dickson
County—Houston
County—Humphreys
County—Montgomery
County—Robertson
County—Stewart
Low Inc—Catchment Area 5
County—Claiborne
County—Cocke
County—Grainger
County—Hamblen
County—Jefferson
County—Union
Low Inc—Shelby
County—Shelby

MENTAL HEALTH: Texas
County Listing

County Name

*Anderson
Facility: Beto Psn
Facility: Gurney Prison
*Andrews
Service Area: West Texas Center (LSA 46a)
*Angelina
Service Area: LSA 7 (Burke Center)
Facility: Duncan Prison
*Archer
Service Area: Rolling Plains (LSA 39b)
*Armstrong
Service Area: Texas Panhandle (LSA 45b)
*Atascosa
Service Area: LSA 8 (Camino Real)
*Austin
Service Area: LSA 11 (Central Gulf Designation)
*Bailey
Service Area: LSA 12 (Central Plains)
*Bandera
Service Area: LSA 40
*Bee
Facility: McConnel Prsn
*Bowie
Service Area: LSA 34 (North East Texas)
Brazoria
*Brazos
Service Area: LSA 32 (MHMra Of Brazos Valley)

MENTAL HEALTH: Texas
County Listing

County Name

*Brewster
Service Area: LSA 6 (Big Bend)
*Briscoe
Service Area: LSA 12 (Central Plains)
*Brooks
Service Area: Coastal Plain—LSA 14b
*Brown
Service Area: LSA 13 (Central Texas)
*Burleson
Service Area: LSA 32 (MHMra Of Brazos Valley)
*Callahan
Service Area: Abilene—LSA 1
*Cameron
Service Area: LSA 44 (Tropical Texas)
*Carson
Service Area: Texas Panhandle (LSA 45b)
*Cass
Service Area: LSA 34 (North East Texas)
*Castro
Service Area: LSA 12 (Central Plains)
*Childress
Service Area: LSA 53
*Clay
Service Area: Rolling Plains (LSA 39b)
*Cochran
Service Area: Cochran Service Area
*Coleman
Service Area: LSA 13 (Central Texas)
*Collingsworth
Service Area: Texas Panhandle (LSA 45b)
*Comanche
Service Area: LSA 13 (Central Texas)
*Cooke
Service Area: LSA 31 (Services Of Texoma)
Coryell
Facility: Mountain View Prison
*Crane
Service Area: Permian Basin (LSA 37)
*Crockett
Service Area: New Val Verde
*Crosby
Service Area: Crosby (LSA 29a)
*Culberson
Service Area: LSA 6 (Big Bend)
*Dawson
Service Area: West Texas Center (LSA 46a)
*Dickens
Service Area: Crosby (LSA 29a)
*Dimmit
Service Area: LSA 8 (Camino Real)
*Donley
Service Area: Texas Panhandle (LSA 45b)
*Duval
Service Area: Coastal Plain—LSA 14b
*Eastland
Service Area: LSA 13 (Central Texas)
*Ector
Service Area: Permian Basin (LSA 37)
*Edwards
Service Area: LSA 40
El Paso County
Service Area: Canutillo Service Area
Service Area: El Paso Service Area
Service Area: Fabens Service Area
Service Area: Hueco Mountain Service Area
*Ellis
Service Area: LSA 26 (Johnson County)
*Erath
Service Area: LSA 36 (Pecan Valley)
*Falls
Service Area: LSA 21 (Heart Of Texas MHMr-Mha)
*Fannin
Service Area: LSA 31 (Services Of Texoma)
*Fisher
Service Area: Abilene—LSA 1
*Floyd
Service Area: LSA 12 (Central Plains)
*Freestone
Service Area: LSA 21 (Heart Of Texas MHMr-Mha)
Facility: Boyd Prison
*Frio
Service Area: LSA 8 (Camino Real)
*Gaines
Service Area: West Texas Center (LSA 46a)
*Garza
Service Area: Crosby (LSA 29a)
Gillespie
Service Area: LSA 40
*Glasscock
Service Area: Permian Basin (LSA 37)
*Gonzales
Service Area: LSA 8 (Camino Real)
*Gray
Service Area: Texas Panhandle (LSA 45b)
*Grayson
Service Area: LSA 31 (Services Of Texoma)
*Gregg
Service Area: LSA 40 (Sabine Valley Center)
*Grimes
Service Area: LSA 32 (MHMra Of Brazos Valley)
*Guadalupe
Service Area: LSA 8 (Camino Real)
*Hale
Service Area: LSA 12 (Central Plains)
*Hall
Service Area: Texas Panhandle (LSA 45b)
*Hansford
Service Area: Texas Panhandle (LSA 45b)
*Hardin
Service Area: LSA 7 (Burke Center)
*Harrison
Service Area: LSA 40 (Sabine Valley Center)
*Haskell
Service Area: Abilene—LSA 1
*Hemphill
Service Area: Texas Panhandle (LSA 45b)
*Henderson
Service Area: Andrews Center (LSA 3)
*Hidalgo
Service Area: LSA 44 (Tropical Texas)
Facility: Lopez Psn
*Hill
*Hockley
Service Area: Cochran Service Area
*Hood
Service Area: LSA 36 (Pecan Valley)
*Houston
Service Area: LSA 7 (Burke Center)
*Hudspeth
Service Area: LSA 6 (Big Bend)
*Hutchinson
Service Area: Texas Panhandle (LSA 45b)
*Jack
Service Area: Rolling Plains (LSA 39b)
*Jasper
Service Area: LSA 7 (Burke Center)
*Jeff Davis
Service Area: LSA 6 (Big Bend)
*Jim Hogg
Service Area: LSA 27 (Laredo)
*Jim Wells
Service Area: Coastal Plain—LSA 14b
*Johnson
Service Area: LSA 26 (Johnson County)
*Jones
Service Area: Abilene—LSA 1
*Karnes
Service Area: LSA 8 (Camino Real)
Facility: Conanally Prison
*Kaufman
Facility: Terrell State Hospital
*Kendall
Service Area: LSA 40
*Kenedy
Service Area: Coastal Plain—LSA 14b
*Kent
Service Area: Crosby (LSA 29a)
*Kerr
Service Area: LSA 40
*Kimble
Service Area: LSA 40
*Kinney
Service Area: New Val Verde
*Kleberg
Service Area: Coastal Plain—LSA 14b
*La Salle
Service Area: LSA 8 (Camino Real)
*Lamb
Service Area: LSA 12 (Central Plains)
*Leon
Service Area: LSA 32 (MHMra Of Brazos Valley)
*Liberty
Service Area: LSA 43 (Tri-Co MHMr Center)
*Limestone
Service Area: LSA 21 (Heart Of Texas MHMr=Mha)
*Lipscomb
Service Area: Texas Panhandle (LSA 45b)
*Llano
Service Area: LSA 40
*Loving
Service Area: Permian Basin (LSA 37)
*Lynn
*Madison
Service Area: LSA 32 (MHMra Of Brazos Valley)
*Marion
Service Area: LSA 40 (Sabine Valley Center)
*Martin
Service Area: West Texas Center (LSA 46a)
*Mason
Service Area: LSA 40
*Maverick
Service Area: LSA 8 (Camino Real)
*McCulloch
Service Area: LSA 13 (Central Texas)
*McMullen
Service Area: LSA 8 (Camino Real)
*Medina
Service Area: Uvalde/Medina

MENTAL HEALTH: Texas
County Listing

County Name

*Menard
Service Area: LSA 40
*Midland
Service Area: Permian Basin (LSA 37)
*Mills
Service Area: LSA 13 (Central Texas)
*Montague
Service Area: Rolling Plains (LSA 39b)
*Montgomery
Service Area: LSA 43 (Tri-Co MHMr Center)
*Motley
Service Area: LSA 12 (Central Plains)
*Nacogdoches
Service Area: LSA 7 (Burke Center)
*Navarro
Service Area: LSA 26 (Johnson County)
*Newton
Service Area: LSA 7 (Burke Center)
*Nolan
Service Area: Abilene—LSA 1
*Ochiltree
Service Area: Texas Panhandle (LSA 45b)
*Palo Pinto
Service Area: LSA 36 (Pecan Valley)
*Panola
Service Area: LSA 40 (Sabine Valley Center)
*Parker
Service Area: LSA 36 (Pecan Valley)
*Parmer
Service Area: LSA 12 (Central Plains)
*Pecos
Service Area: Permian Basin (LSA 37)
*Polk
Service Area: LSA 7 (Burke Center)
Facility: Terrell Prison
*Presidio
Service Area: LSA 6 (Big Bend)
*Rains
Service Area: Andrews Center (LSA 3)
*Real
Service Area: LSA 40
*Red River
Service Area: LSA 34 (North East Texas)
*Roberts
Service Area: Texas Panhandle (LSA 45b)
*Robertson
Service Area: LSA 32 (MHMra Of Brazos Valley)
*Runnels
Service Area: LSA 37b
*Rusk
Service Area: LSA 40 (Sabine Valley Center)
*Sabine
Service Area: LSA 7 (Burke Center)
*San Augustine
Service Area: LSA 7 (Burke Center)
*San Jacinto
Service Area: LSA 7 (Burke Center)
*San Saba
Service Area: LSA 13 (Central Texas)
*Schleicher
*Shackelford
Service Area: Abilene—LSA 1
*Shelby
Service Area: LSA 7 (Burke Center)
*Smith
Service Area: Andrews Center (LSA 3)
*Somervell
Service Area: LSA 36 (Pecan Valley)

MENTAL HEALTH: Texas
County Listing

County Name

*Starr
Service Area: LSA 27 (Laredo)
*Stephens
Service Area: Abilene—LSA 1
*Stonewall
Service Area: Abilene—LSA 1
*Sutton
Service Area: New Val Verde
*Swisher
Service Area: LSA 12 (Central Plains)
Taylor
Service Area: Abilene—LSA 1
*Terrell
Service Area: New Val Verde
*Terry
Service Area: West Texas Center (LSA 46a)
*Throckmorton
Service Area: Abilene—LSA 1
*Trinity
Service Area: LSA 7 (Burke Center)
*Tyler
Service Area: LSA 7 (Burke Center)
*Upshur
Service Area: LSA 40 (Sabine Valley Center)
*Upton
Service Area: Permian Basin (LSA 37)
*Uvalde
Service Area: Uvalde/Medina
*Val Verde
Service Area: New Val Verde
*Van Zandt
Service Area: Andrews Center (LSA 3)
*Walker
Service Area: LSA 43 (Tri-Co MHMr Center)
*Waller
Service Area: LSA 11 (Central Gulf Designation)
*Ward
Service Area: Permian Basin (LSA 37)
*Washington
Service Area: LSA 32 (MHMra Of Brazos Valley)
*Webb
Service Area: LSA 27 (Laredo)
*Wheeler
Service Area: Texas Panhandle (LSA 45b)
*Willacy
Service Area: LSA 44 (Tropical Texas)
*Wilson
Service Area: LSA 8 (Camino Real)
*Winkler
Service Area: Permian Basin (LSA 37)
*Wise
Service Area: Rolling Plains (LSA 39b)
*Wood
Service Area: Andrews Center (LSA 3)
*Yoakum
Service Area: West Texas Center (LSA 46a)
*Young
Service Area: Rolling Plains (LSA 39b)
*Zapata
Service Area: LSA 27 (Laredo)
*Zavala
Service Area: LSA 8 (Camino Real)

MENTAL HEALTH: Texas
Service Area Listing

Service Area Name

Abilene—LSA 1
County—Callahan
County—Fisher
County—Haskell
County—Jones
County—Nolan
County—Shackelford
County—Stephens
County—Stonewall
County—Taylor
County—Throckmorton
Andrews Center (LSA 3)
County—Henderson
County—Rains
County—Smith
County—Van Zandt
County—Wood
Canutillo Service Area
County—El Paso County
Parts:
El Paso Northwest Division
Coastal Plain—LSA 14b
County—Brooks
County—Duval
County—Jim Wells
County—Kenedy
County—Kleberg
Cochran Service Area
County—Cochran
County—Hockley
Crosby (LSA 29a)
County—Crosby
County—Dickens
County—Garza
County—Kent
El Paso Service Area
County—El Paso County
Parts:
El Paso Division
Fabens Service Area
County—El Paso County
Parts:
El Paso East Division
Hueco Mountain Service Area
County—El Paso County
Parts:
El Paso North Central Division
LSA 11 (Central Gulf Designation)
County—Austin
County—Waller
LSA 12 (Central Plains)
County—Bailey
County—Briscoe
County—Castro
County—Floyd
County—Hale
County—Lamb
County—Motley
County—Parmer
County—Swisher
LSA 13 (Central Texas)
County—Brown
County—Coleman
County—Comanche
County—Eastland
County—McCulloch
County—Mills
County—San Saba
LSA 21 (Heart Of Texas MHMr=Mha)
County—Falls
County—Freestone
County—Limestone

MENTAL HEALTH: Texas
Service Area Listing

Service Area Name

LSA 26 (Johnson County)
County—Ellis
County—Johnson
County—Navarro
LSA 27 (Laredo)
County—Jim Hogg
County—Starr
County—Webb
County—Zapata
LSA 31 (Services Of Texoma)
County—Cooke
County—Fannin
County—Grayson
LSA 32 (MHMra Of Brazos Valley)
County—Brazos
County—Burleson
County—Grimes
County—Leon
County—Madison
County—Robertson
County—Washington
LSA 34 (North East Texas)
County—Bowie
County—Cass
County—Red River
LSA 36 (Pecan Valley)
County—Erath
County—Hood
County—Palo Pinto
County—Parker
County—Somervell
LSA 37b
County—Runnels
LSA 40
County—Bandera
County—Edwards
County—Gillespie
County—Kendall
County—Kerr
County—Kimble
County—Llano
County—Mason
County—Menard
County—Real
LSA 40 (Sabine Valley Center)
County—Gregg
County—Harrison
County—Marion
County—Panola
County—Rusk
County—Upshur
LSA 43 (Tri-Co MHMr Center)
County—Liberty
County—Montgomery
County—Walker
LSA 44 (Tropical Texas)
County—Cameron
County—Hidalgo
County—Willacy
LSA 53
County—Childress
LSA 6 (Big Bend)
County—Brewster
County—Culberson
County—Hudspeth
County—Jeff Davis
County—Presidio
LSA 7 (Burke Center)
County—Angelina
County—Hardin
County—Houston
County—Jasper

MENTAL HEALTH: Texas
Service Area Listing

Service Area Name

County—Nacogdoches
County—Newton
County—Polk
County—Sabine
County—San Augustine
County—San Jacinto
County—Shelby
County—Trinity
County—Tyler
LSA 8 (Camino Real)
County—Atascosa
County—Dimmit
County—Frio
County—Gonzales
County—Guadalupe
County—Karnes
County—La Salle
County—McMullen
County—Maverick
County—Wilson
County—Zavala
New Val Verde
County—Crockett
County—Kinney
County—Sutton
County—Terrell
County—Val Verde
Permian Basin (LSA 37)
County—Crane
County—Ector
County—Glasscock
County—Loving
County—Midland
County—Pecos
County—Upton
County—Ward
County—Winkler
Rolling Plains (LSA 39b)
County—Archer
County—Clay
County—Jack
County—Montague
County—Wise
County—Young
Texas Panhandle (LSA 45b)
County—Armstrong
County—Carson
County—Collingsworth
County—Donley
County—Gray
County—Hall
County—Hansford
County—Hemphill
County—Hutchinson
County—Lipscomb
County—Ochiltree
County—Roberts
County—Wheeler
Uvalde/Medina
County—Medina
County—Uvalde
West Texas Center (LSA 46a)
County—Andrews
County—Dawson
County—Gaines
County—Martin
County—Terry
County—Yoakum

MENTAL HEALTH: Texas
Facility Listing

Facility Name

Beto Psn
County—Anderson
Boyd Prison
County—Freestone
Conanally Prison
County—Karnes
Duncan Prison
County—Angelina
Gurney Prison
County—Anderson
Lopez Psn
County—Hidalgo
McConnel Prsn
County—Bee
Mountain View Prison
County—Coryell
Terrell Prison
County—Polk
Terrell State Hospital
County—Kaufman

MENTAL HEALTH: Utah
County Listing

County Name

*Beaver
Service Area: Five County MHCA (SW District)
*Box Elder
Population Group: Low Inc—Bridgerland Area
*Cache
Population Group: Low Inc—Bridgerland Area
*Carbon
Population Group: Low Inc—Four County MHCA (SE District)
*Daggett
Service Area: Uintah Basin
*Duchesne
Service Area: Uintah Basin
*Emery
Population Group: Low Inc—Four County MHCA (SE District)
*Garfield
Service Area: Five County MHCA (SW District)
*Grand
Population Group: Low Inc—Four County MHCA (SE District)
*Iron
Service Area: Five County MHCA (SW District)
*Juab
Service Area: Six County MHCA
Kane
Service Area: Five County MHCA (SW District)
*Millard
Service Area: Six County MHCA
*Morgan
Population Group: Low Inc—Weber/Morgan
*Piute
Service Area: Six County MHCA
*Rich
Population Group: Low Inc—Bridgerland Area
Salt Lake
Facility: Draper State Prison
*San Juan
Population Group: Low Inc—Four County MHCA (SE District)

MENTAL HEALTH: Utah
County Listing

County Name

*Sanpete
Service Area: Six County MHCA
Facility: Central Utah Corr Fac
*Sevier
Service Area: Six County MHCA
*Summit
*Tooele
*Uintah
Service Area: Uintah Basin
Utah
*Wasatch
*Washington
Service Area: Five County MHCA (SW District)
*Wayne
Service Area: Six County MHCA
Weber
Population Group: Low Inc—Weber/Morgan

MENTAL HEALTH: Utah
Service Area Listing

Service Area Name

Five County MHCA (SW District)
County—Beaver
County—Garfield
County—Iron
County—Kane
County—Washington
Six County MHCA
County—Juab
County—Millard
County—Piute
County—Sanpete
County—Sevier
County—Wayne
Uintah Basin
County—Daggett
County—Duchesne
County—Uintah

MENTAL HEALTH: Utah
Population Group Listing

Population Group

Low Inc—Bridgerland Area
County—Box Elder
County—Cache
County—Rich
Low Inc—Four County MHCA (SE District)
County—Carbon
County—Emery
County—Grand
County—San Juan
Low Inc—Weber/Morgan
County—Morgan
County—Weber

MENTAL HEALTH: Utah
Facility Listing

Facility Name

Central Utah Corr Fac
County—Sanpete
Draper State Prison
County—Salt Lake

MENTAL HEALTH: Vermont
County Listing

County Name

*Caledonia
Service Area: Northeast Kingdom
*Essex
Service Area: Northeast Kingdom
*Franklin
Service Area: Franklin/Grand Isle
*Grand Isle
Service Area: Franklin/Grand Isle
*Orleans
Service Area: Northeast Kingdom

MENTAL HEALTH: Vermont
Service Area Listing

Service Area Name

Franklin/Grand Isle
County—Franklin
County—Grand Isle
Northeast Kingdom
County—Caledonia
County—Essex
County—Orleans

MENTAL HEALTH: Virginia
County Listing

County Name

*Accomack
Service Area: Eastern Shore Of Virginia
*Amelia
Service Area: Planning Dist XIV
*Bland
Service Area: Mount Rogers
*Brunswick
Service Area: Southside Planning Ditrict
*Buchanan
Service Area: Planning Dist II
*Buckingham
Service Area: Planning Dist XIV
*Carroll
Service Area: Mount Rogers
*Charlotte
Service Area: Planning Dist XIV
Chesapeake
Population Group: Low Inc—S. Norfolk (Pl. District 20)
*Cumberland
Service Area: Planning Dist XIV
*Danville City
Service Area: Planning Dist XII
*Dickenson
Service Area: Planning Dist II
*Dinwiddie/Petersburg
Service Area: Planning Dist Xix
*Essex
Service Area: Middle Peninsula/Northern Neck
*Floyd
Service Area: New River Valley—Planning District Iv
*Franklin
Service Area: Planning Dist XII
*Galax City
Service Area: Mount Rogers
*Giles
Service Area: New River Valley—Planning District Iv
*Gloucester
Service Area: Middle Peninsula/Northern Neck
*Grayson
Service Area: Mount Rogers
*Halifax
Service Area: Southside Planning Ditrict
*Henry
Service Area: Planning Dist XII
*King And Queen
Service Area: Middle Peninsula/Northern Neck
*King William
Service Area: Middle Peninsula/Northern Neck
*Lancaster
Service Area: Middle Peninsula/Northern Neck
*Lee
Service Area: Lenowisco
*Lunenburg
Service Area: Planning Dist XIV
*Martinsville City
Service Area: Planning Dist XII
*Mathews
Service Area: Middle Peninsula/Northern Neck
*Mecklenburg
Service Area: Southside Planning Ditrict
*Middlesex
Service Area: Middle Peninsula/Northern Neck
*Northampton
Service Area: Eastern Shore Of Virginia
*Northumberland
Service Area: Middle Peninsula/Northern Neck
*Norton City
Service Area: Lenowisco
*Nottoway
Service Area: Planning Dist XIV
*Patrick
Service Area: Planning Dist XII
*Pittsylvania
Service Area: Planning Dist XII
*Prince Edward
Service Area: Planning Dist XIV
*Pulaski
Service Area: New River Valley—Planning District Iv
*Richmond
Service Area: Middle Peninsula/Northern Neck
*Russell
Service Area: Planning Dist II
*Scott
Service Area: Lenowisco
*Smyth
Service Area: Mount Rogers
Facility: Southwestern MH Inst
*Surry
Service Area: Planning Dist Xix
*Sussex
Service Area: Planning Dist Xix
*Tazewell
Service Area: Planning Dist II
*Westmoreland
Service Area: Middle Peninsula/Northern Neck
*Wise
Service Area: Lenowisco
*Wythe
Service Area: Mount Rogers

MENTAL HEALTH: Virginia
Service Area Listing

Service Area Name
Eastern Shore Of Virginia
County—Accomack
County—Northampton
Lenowisco
County—Lee
County—Scott
County—Wise
County—Norton City
Middle Peninsula/Northern Neck
County—Essex
County—Gloucester
County—King And Queen
County—King William
County—Lancaster
County—Mathews
County—Middlesex
County—Northumberland
County—Richmond
County—Westmoreland
Mount Rogers
County—Bland
County—Carroll
County—Grayson
County—Smyth
County—Wythe
County—Galax City
New River Valley—Planning District Iv
County—Floyd
County—Giles
County—Pulaski
Planning Dist II
County—Buchanan
County—Dickenson
County—Russell
County—Tazewell
Planning Dist Xix
County—Dinwiddie/Petersburg
County—Surry
County—Sussex
Planning Dist XII
County—Franklin
County—Henry
County—Patrick
County—Pittsylvania
County—Danville City
County—Martinsville City
Planning Dist XIV
County—Amelia
County—Buckingham
County—Charlotte
County—Cumberland
County—Lunenburg
County—Nottoway
County—Prince Edward
Southside Planning Ditrict
County—Brunswick
County—Halifax
County—Mecklenburg

MENTAL HEALTH: Virginia
Population Group Listing

Population Group
Low Inc—S. Norfolk (Pl. District 20)
County—Chesapeake
Parts:
C.T. 201–204
C.T. 205.01–205.02
C.T. 206–207
C.T. 209.03

MENTAL HEALTH: Virginia
Facility Listing

Facility Name
Southwestern MH Inst
County—Smyth

MENTAL HEALTH: Washington
County Listing

County Name
*Adams
*Benton
Service Area: Tri-Cities
*Chelan
Service Area: Chelan/Douglas
*Clallam (g)
Facility: Clallam Bay Corr Ctr
*Cowlitz
Population Group: Low Inc—Cowlitz Co
*Douglas
Service Area: Chelan/Douglas
*Ferry
*Franklin
Service Area: Tri-Cities
Facility: Coyote Ridge Corr Ctr
*Grant
*Jefferson
*Kittitas
*Lewis
Population Group: Low Inc—Lewis Co
*Lincoln
*Mason
Population Group: Low Inc—Mason Cty
Facility: Wash/Corr/Reception Ctr
*Okanogan
*Pend Oreille
Snohomish
Facility: Twin Rivers Corr Ctr
*Stevens
*Wahkiakum
*Walla Walla
Service Area: Tri-Cities
Facility: Wa State Pen
Yakima
Population Group: MSFW—Yakima Cty

MENTAL HEALTH: Washington
Service Area Listing

Service Area Name
Chelan/Douglas
County—Chelan
County—Douglas
Parts:
Low Inc
Tri-Cities
County—Benton
County—Franklin
County—Walla Walla
Parts:
Burbank Division

MENTAL HEALTH: Washington
Population Group Listing

Population Group
Low Inc—Cowlitz Co
County—Cowlitz
Low Inc—Lewis Co
County—Lewis
Low Inc—Mason Cty
County—Mason
MSFW—Yakima Cty
County—Yakima

MENTAL HEALTH: Washington
Facility Listing

Facility Name
Clallam Bay Corr Ctr
County—Clallam
Coyote Ridge Corr Ctr
County—Franklin
Twin Rivers Corr Ctr
County—Snohomish
Wa State Pen
County—Walla Walla
Wash/Corr/Reception Ctr
County—Mason

MENTAL HEALTH: West Virginia
County Listing

County Name
Berkeley
Service Area: Eastern Panhandle Ca
*Braxton
Service Area: Central (VI–2)
*Doddridge
Service Area: Central (VI–2)
*Gilmer
Service Area: Central (VI–2)
*Grant
Service Area: Petersburg (VIII)
*Greenbrier
Service Area: Seneca (IV)
*Hampshire
Service Area: Petersburg (VIII)
*Hardy
Service Area: Petersburg (VIII)
*Harrison
Service Area: Central (VI–2)
Jefferson
Service Area: Eastern Panhandle Ca
*Lewis
Service Area: Central (VI–2)
Facility: William R. Sharpe Hospital
*Logan
Service Area: Logan/Mingo (II–1)
*Marion
Facility: Fairmont General Hosp
*McDowell
Service Area: Mercer/Mcdowell/Wyoming (I–1)
*Mercer
Service Area: Mercer/Mcdowell/Wyoming (I–1)
*Mineral
Service Area: Petersburg (VIII)
*Mingo
Service Area: Logan/Mingo (II–1)
*Morgan
Service Area: Eastern Panhandle Ca
*Nicholas
Service Area: Seneca (IV)
*Pendleton
Service Area: Petersburg (VIII)
*Pocahontas
Service Area: Seneca (IV)
*Preston
Service Area: Valley (VI–1, Part)
*Taylor
Service Area: Valley (VI–1, Part)
*Webster
Service Area: Seneca (IV)
*Wyoming
Service Area: Mercer/Mcdowell/Wyoming (I–1)

MENTAL HEALTH: West Virginia
Service Area Listing

Service Area Name

Central (VI–2)
County—Braxton
County—Doddridge
County—Gilmer
County—Harrison
County—Lewis
Eastern Panhandle Ca
County—Berkeley
County—Jefferson
County—Morgan
Logan/Mingo (II–1)
County—Logan
County—Mingo
Mercer/Mcdowell/Wyoming (I–1)
County—McDowell
County—Mercer
County—Wyoming
Petersburg (VIII)
County—Grant
County—Hampshire
County—Hardy
County—Mineral
County—Pendleton
Seneca (IV)
County—Greenbrier
County—Nicholas
County—Pocahontas
County—Webster
Valley (VI–1, Part)
County—Preston
County—Taylor

MENTAL HEALTH: West Virginia
Facility Listing

Facility Name

Fairmont General Hosp
County—Marion
William R. Sharpe Hospital
County—Lewis

MENTAL HEALTH: Wisconsin
County Listing

County Name

*Adams
Service Area: Catchment Area 16
*Ashland
Service Area: Catchment Area 3
*Barron
Service Area: Catchment Area 2
*Bayfield
Service Area: Catchment Area 3
Brown
Facility: Green Bay Corr. I.
*Buffalo
Service Area: Catchment Area 9
*Burnett
Service Area: Catchment Area 2
*Clark
*Columbia
Service Area: Catchment Area 16
*Crawford
Service Area: Catchment Area 21
Facility: Prairie Du Chien Corr Inst
*Dodge
Facility: Dodge Corr Inst
Facility: Fox Lake Corr. I.
Facility: Waupun Corr Inst
*Door
Service Area: Catchment Area #6
*Douglas

MENTAL HEALTH: Wisconsin
County Listing

County Name

Service Area: Catchment Area 1
*Dunn
Service Area: Catchment Area 7
*Florence
Service Area: Catchment Area #6
*Fond Du Lac
Facility: Taycheedah Corr Inst
*Forest
Service Area: Catchment Area 4
*Grant
Service Area: Catchment Area 21
*Green
Service Area: Catchment Area 21
*Iowa
Service Area: Catchment Area 21
*Iron
Service Area: Catchment Area 3
*Jackson
Service Area: Catchment Area 9
Facility: Jackson Corr Inst
*Jefferson
*Juneau
Service Area: Catchment Area 15
*Lafayette
Service Area: Catchment Area 21
*Langlade
*Lincoln
*Marinette
Service Area: Catchment Area #6
*Marquette
Service Area: Catchment Area 16
*Menominee
Service Area: Catchment Area 11
Milwaukee
Service Area: Near North Side—Milwaukee
Facility: Milwaukee MH Complex
*Monroe
*Oconto
*Oneida
Service Area: Catchment Area 4
*Pepin
Service Area: Catchment Area 7
*Pierce
Service Area: Catchment Area 7
*Polk
Service Area: Catchment Area 2
*Price
Service Area: Catchment Area 3
Racine
Facility: Racine Corr I
Facility: Racine Youth Corr Ctr
*Richland
Service Area: Catchment Area 15
*Rusk
Service Area: Catchment Area 2
*Sauk
Service Area: Catchment Area 15
*Sawyer
Service Area: Catchment Area 3
*Shawano
Service Area: Catchment Area 11
Sheboygan
Facility: Kettle Moraine Corr I
*St. Croix
Service Area: Catchment Area 7
*Taylor
*Trempealeau
Service Area: Catchment Area 9
*Vernon
*Vilas
Service Area: Catchment Area 4
*Washburn

MENTAL HEALTH: Wisconsin
County Listing

County Name

Service Area: Catchment Area 2
Waukesha
Facility: Ethan Allen School
*Waupaca
Service Area: Catchment Area 11
*Waushara
Winnebage
Facility: Oshkosh Corr I
Facility: Wisconsin Resource Center

MENTAL HEALTH: Wisconsin
Service Area Listing

Service Area Name

Catchment Area 1
County—Douglas
Catchment Area #6
County—Door
County—Florence
County—Marinette
Catchment Area 11
County—Menominee
County—Shawano
County—Waupaca
Catchment Area 15
County—Juneau
County—Richland
County—Sauk
Catchment Area 16
County—Adams
County—Columbia
County—Marquette
Catchment Area 2
County—Barron
County—Burnett
County—Polk
County—Rusk
County—Washburn
Catchment Area 21
County—Crawford
County—Grant
County—Green
County—Iowa
County—Lafayette
Catchment Area 3
County—Ashland
County—Bayfield
County—Iron
County—Price
County—Sawyer
Catchment Area 4
County—Forest
County—Oneida
County—Vilas
Catchment Area 7
County—Dunn
County—Pepin
County—Pierce
County—St. Croix
Catchment Area 9
County—Buffalo
County—Jackson
County—Trempealeau
Near North Side—Milwaukee
County—Milwaukee
Parts:
C.T. 18–28
C.T. 38–49
C.T. 60–72
C.T. 79–92
C.T. 98–107
C.T. 114–116

MENTAL HEALTH: Wisconsin
Service Area Listing

Service Area Name
C.T. 141–142
C.T. 145

MENTAL HEALTH: Wisconsin
Facility Listing

Facility Name
Dodge Corr Inst
County—Dodge
Ethan Allen School
County—Waukesha
Fox Lake Corr. I.
County—Dodge
Green Bay Corr. I.
County—Brown
Jackson Corr Inst
County—Jackson
Kettle Moraine Corr I
County—Sheboygan
Milwaukee MH Complex
County—Milwaukee
Oshkosh Corr I
County—Winnebage
Prairie Du Chien Corr Inst
County—Crawford
Racine Corr I
County—Racine
Racine Youth Corr Ctr
County—Racine
Taycheedah Corr Inst
County—Fond Du Lac
Waupun Corr Inst
County—Dodge
Wisconsin Resource Center
County—Winnebage

MENTAL HEALTH: Wyoming
County Listing

County Name
*Campbell
Service Area: Northeast Wyoming MHCA
*Crook
Service Area: Northeast Wyoming MHCA
*Johnson
Service Area: Northeast Wyoming MHCA
*Sheridan
Service Area: Northeast Wyoming MHCA
*Uinta
Facility: Wyoming State Hosp
*Weston
Service Area: Northeast Wyoming MHCA

MENTAL HEALTH: Wyoming
Service Area Listing

Service Area Name
Northeast Wyoming MHCA
County—Campbell
County—Crook
County—Johnson
County—Sheridan
County—Weston

MENTAL HEALTH: Wyoming
Facility Listing

Facility Name
Wyoming State Hosp
County—Uinta

MENTAL HEALTH: American Samoa
County Listing

County Name
*Eastern
Service Area: Terr. Of American Samoa
*Manua
Service Area: Terr. Of American Samoa
*Rose Island
Service Area: Terr. Of American Samoa
*Swains Island
Service Area: Terr. Of American Samoa
*Western
Service Area: Terr. Of American Samoa

MENTAL HEALTH: American Samoa
Service Area Listing

Service Area Name
Terr. Of American Samoa
County—Eastern
County—Manua
County—Rose Island
County—Swains Island
County—Western

MENTAL HEALTH: Fed Ste Micronesia
County Listing

County Name
*Chuuk State
*Kosrae State
*Pohnpei State
*Yap State

MENTAL HEALTH: Guam
County Listing

County Name
*Guam
Service Area: Terr. Of Guam

MENTAL HEALTH: Guam
Service Area Listing

Service Area Name
Terr. Of Guam
County—Guam

MENTAL HEALTH: N. Mariana Islands
County Listing

County Name
*Northern Islands
Service Area: Commonwealth N. Marianas Islands
*Rota
Service Area: Commonwealth N. Marianas Islands
*Saipan
Service Area: Commonwealth N. Marianas Islands
*Tinian
Service Area: Commonwealth N. Marianas Islands

MENTAL HEALTH: N. Mariana Islands
Service Area Listing

Service Area Name
Commonwealth N. Marianas Islands
County—Northern Islands
County—Rota
County—Saipan
County—Tinian

MENTAL HEALTH: Republic of Palau
County Listing

County Name
*Republic Of Palau

MENTAL HEALTH: Puerto Rico
County Listing

County Name
*Adjuntas
Service Area: RSA 7
*Aguada
Service Area: RSA 1
*Aguadilla
Service Area: RSA 6
*Aguas Buenas
Service Area: Caguas (Sub-Region I)
*Aibonito
Service Area: RSA 21
*Anasco
Service Area: RSA 1
*Arecibo
Service Area: RSA 7
Facility: Sabana Hoyos Corr Detention Ctr
Facility: Sabana Hoyos Correctional Center
*Arroyo
Service Area: RSA 19
*Barceloneta
Service Area: RSA 7
*Barranquitas
Service Area: RSA 8
*Cabo Rojo
Service Area: RSA 3
*Caguas
Service Area: Caguas (Sub-Region I)
*Camuy
Service Area: RSA 4
*Canovanas
Service Area: RSA 14
*Carolina
Service Area: RSA 13
*Catano
Service Area: RSA 9
*Cayey
Service Area: RSA 21
*Ceiba
Service Area: RSA 14
*Ciales
Service Area: RSA 24
*Cidra
Service Area: Caguas (Sub-Region I)
*Coamo
Service Area: RSA 20
*Comerio
Service Area: RSA 8
*Corozal
Service Area: RSA 8
*Culebra
Service Area: RSA 14
*Dorado
Service Area: RSA 9
*Fajardo
Service Area: RSA 14
*Florida
Service Area: RSA 7
*Guanica
Service Area: RSA 2
*Guayama
Service Area: RSA 19
*Guayanilla
Service Area: RSA 2
*Guaynabo
*Gurabo
Service Area: Caguas (Sub-Region I)
*Hatillo

MENTAL HEALTH: Puerto Rico
County Listing

County Name

Service Area: RSA 4
*Hormiqueros
Service Area: RSA 3
*Humacao
Service Area: RSA 17
*Isabela
Service Area: RSA 6
*Jayuya
Service Area: RSA 7
*Juana Diaz
Service Area: RSA 20
*Juncos
Service Area: Caguas (Sub-Region I)
*Lajas
Service Area: RSA 3
*Lares
Service Area: RSA 4
*Las Marias
Service Area: RSA 4
*Las Piedras
Service Area: RSA 17
*Loiza
Service Area: RSA 14
*Luquillo
Service Area: RSA 14
*Manati
Service Area: RSA 24
*Maricao
Service Area: RSA 4
*Maunabo
Service Area: RSA 19
*Mayaguez
Service Area: RSA 1
*Moca
Service Area: RSA 6
*Morovis
Service Area: RSA 24
*Naguabo
Service Area: RSA 17
*Naranjito
Service Area: RSA 8
*Orocovis
Service Area: RSA 8
*Patillas
Service Area: RSA 19
*Penuelas
Service Area: RSA 2
*Quebradillas
Service Area: RSA 6
*Rincon
Service Area: RSA 1
*Rio Grande
Service Area: RSA 14
*Sabana Grande
Service Area: RSA 2
*Salinas
Service Area: RSA 20
*San German
Service Area: RSA 3
*San Lorenzo
Service Area: RSA 17
*San Sebastian
Service Area: RSA 4
*Santa Isabel
Service Area: RSA 20
*Toa Alta
Service Area: RSA 9
*Toa Baja
Service Area: RSA 9
*Trujillo Alto
Service Area: RSA 13
*Utuado

MENTAL HEALTH: Puerto Rico
County Listing

County Name

Service Area: RSA 7
*Vega Alta
Service Area: RSA 23
*Vega Baja
Service Area: RSA 23
*Vieques
Service Area: RSA 14
*Villalba
Service Area: RSA 20
*Yabucoa
Service Area: RSA 17
*Yauco
Service Area: RSA 2

MENTAL HEALTH: Puerto Rico
Service Area Listing

Service Area Name

Caguas (Sub-Region I)
County—Aguas Buenas
County—Caguas
County—Cidra
County—Gurabo
County—Juncos
RSA 1
County—Aguada
County—Anasco
County—Mayaguez
County—Rincon
RSA 13
County—Carolina
County—Trujillo Alto
RSA 14
County—Canovanas
County—Ceiba
County—Culebra
County—Fajardo
County—Loiza
County—Luquillo
County—Rio Grande
County—Vieques
RSA 17
County—Humacao
County—Las Piedras
County—Naguabo
County—San Lorenzo
County—Yabucoa
RSA 19
County—Arroyo
County—Guayama
County—Maunabo
County—Patillas
RSA 2
County—Guanica
County—Guayanilla
County—Penuelas
County—Sabana Grande
County—Yauco
RSA 20
County—Coamo
County—Juana Diaz
County—Salinas
County—Santa Isabel
County—Villalba
RSA 21
County—Aibonito
County—Cayey
RSA 23
County—Vega Alta
County—Vega Baja
RSA 24
County—Ciales

MENTAL HEALTH: Puerto Rico
Service Area Listing

Service Area Name

County—Manati
County—Morovis
RSA 3
County—Cabo Rojo
County—Hormiqueros
County—Lajas
County—San German
RSA 4
County—Camuy
County—Hatillo
County—Lares
County—Las Marias
County—Maricao
County—San Sebastian
RSA 6
County—Aguadilla
County—Isabela
County—Moca
County—Quebradillas
RSA 7
County—Adjuntas
County—Arecibo
County—Barceloneta
County—Florida
County—Jayuya
County—Utuado
RSA 8
County—Barranquitas
County—Comerio
County—Corozal
County—Naranjito
County—Orocovis
RSA 9
County—Catano
County—Dorado
County—Toa Alta
County—Toa Baja

MENTAL HEALTH: Puerto Rico
Facility Listing

Facility Name

Sabana Hoyos Corr Detention Ctr
County—Arecibo
Sabana Hoyos Correctional Center
County—Arecibo

MENTAL HEALTH: Virgin Islands
County Listing

County Name

*St. Croix
Service Area: Virgin Islands C.A.
*St. John
Service Area: Virgin Islands C.A.
*St. Thomas
Service Area: Virgin Islands C.A.

MENTAL HEALTH: Virgin Islands
Service Area Listing

Service Area Name

Virgin Islands C.A.
County—St. Croix
County—St. John
County—St. Thomas

DENTAL: Alabama
County Listing

County Name

Autauga

DENTAL: Alabama
County Listing

County Name

Population Group: Low Inc—Autauga Co
Baldwin
Population Group: Low Inc—DCA 27
*Barbour
Population Group: Low Inc—Barbour Co
Blount
Population Group: Low Inc—Blount
Calhoun
Population Group: Low Inc—Calhoun
*Chambers
Population Group: Low Inc—Chambers Co
*Cherokee
Population Group: Low Inc—Cherokee
*Choctaw
Population Group: Low Inc—Choctaw
*Clay
Population Group: Low Inc—Clay
*Cleburne
Population Group: Low Inc—Cleburn
*Conecuh
*Cullman
Population Group: Low Inc—Cullman
*Dallas
Population Group: Low Inc—DCA 16
*De Kalb
Population Group: Low Inc—Dekalb
Elmore
Population Group: Low Inc—Elmore Co
*Escambia
Population Group: Low Inc—Escambia County
Etowah
Population Group: Low Inc—Etowah Co
*Fayette
Population Group: Low Inc—DCA 8
*Greene
Population Group: Low Inc—DCA 17
*Hale
Population Group: Low Inc—DCA 17
*Jackson
Population Group: Low Inc—Jackson
*Lamar
Population Group: Low Inc—DCA 8
Lawrence
Population Group: Low Inc—Morgan/Lawrence
Limestone
Population Group: Low Inc—Limestone
Madison
Population Group: Low Inc—Central Madison Co
*Marion
Population Group: Low Inc—Marion
*Marshall
Population Group: Low Inc—Marshall
Mobile
Population Group: Low Inc—DCA 27
*Monroe
Montgomery
Population Group: Low Inc—W Montgomery
Morgan
Population Group: Low Inc—Morgan/Lawrence
*Perry
Population Group: Low Inc—DCA 16
*Pickens
Population Group: Low Inc—Pickens Co.
St Clair
Population Group: Low Inc—St. Clair
*Sumter
Population Group: Low Inc—Franklin Co.

DENTAL: Alabama
County Listing

County Name

*Talladega
Facility: FCI—Talladega
Tuscaloosa
Population Group: Low Inc—Tuscaloosa Co
*Walker
Population Group: Low Inc—Walker
*Winston
Population Group: Low Inc—Winston Co.

DENTAL: Alabama
Population Group Listing

Population Group

Low Inc—Autauga Co
County—Autauga
Parts:
Low Income
Low Inc—Barbour Co
County—Barbour
Parts:
Low Income
Low Inc—Blount
County—Blount
Parts:
Low Income
Low Inc—Calhoun
County—Calhoun
Parts:
Low Income
Low Inc—Central Madison Co
County—Madison
Parts:
Gurley CCD
Hazel Green CCD
Huntsville CCD
Madison Crossroads CCD
New Hope CCD
New Market CCD
Low Inc—Chambers Co
County—Chambers
Parts:
Low Inc
Low Inc—Cherokee
County—Cherokee
Parts:
Low Income
Low Inc—Choctaw
County—Choctaw
Parts:
Low Income
Low Inc—Clay
County—Clay
Parts:
Low Income
Low Inc—Cleburn
County—Cleburne
Parts:
Low Income
Low Inc—Cullman
County—Cullman
Parts:
Low Income
Low Inc—Dekalb
County—De Kalb
Parts:
Low Income
Low Inc—DCA 16
County—Dallas
Parts:
Low Income
County—Perry

DENTAL: Alabama
Population Group Listing

Population Group

Parts:
Low Income
Low Inc—DCA 17
County—Greene
Parts:
Greene
County—Hale
Parts:
Hale
Low Inc—DCA 27
County—Baldwin
Parts:
Baldwin
County—Mobile
Parts:
Mobile
Low Inc—DCA 8
County—Fayette
Parts:
Low Income
County—Lamar
Parts:
Low Income
Low Inc—Elmore Co
County—Elmore
Parts:
Low Income
Low Inc—Escambia County
County—Escambia
Parts:
Low-Income
Low Inc—Etowah Co
County—Etowah
Parts:
Low Income
Low Inc—Franklin Co.
County—Sumter
Parts:
Low Income
Low Inc—Jackson
County—Jackson
Parts:
Low Income
Low Inc—Limestone
County—Limestone
Parts:
Low Income
Low Inc—Marion
County—Marion
Parts:
Low Income
Low Inc—Marshall
County—Marshall
Parts:
Low Income
Low Inc—Morgan/Lawrence
County—Lawrence
Parts:
Low Income
County—Morgan
Parts:
Low Income
Low Inc—Pickens Co.
County—Pickens
Parts:
Low Income
Low Inc—St. Clair
County—St Clair
Parts:
Low Income
Low Inc—Tuscaloosa Co
County—Tuscaloosa

DENTAL: Alabama
Population Group Listing

Population Group

Parts:
Low Income
Low Inc—W Montgomery
County—Montgomery
Parts:
C.T. 1–2
C.T. 3.85
C.T. 4–7
C.T. 10–11
C.T. 13
C.T. 15–16
C.T. 22–24
C.T. 51.02
C.T. 59.02
Low Inc—Walker
County—Walker
Parts:
Low Income
Low Inc—Winston Co.
County—Winston
Parts:
Low Income

DENTAL: Alabama
Facility Listing

Facility Name

FCI—Talladega
County—Talladega

DENTAL: Alaska
Census Area Listing

Census Area Name

*Aleutians East Area
*Aleutians West Area
Anchorage Borough
Population Group: Low Inc—North Anchorage
*Bethel Area
*Bristol Bay Borough
*Denali Borough
*Dillingham Area
*Lake And Peninsula Borough
*North Slope Borough
*Northwest Arctic Borough
*Skagway-Hoonah-Angoon Borough
*Southeast-Fairbanks Area
*Wade Hampton
*Yakutat Borough
*Yukon-Koyukuk

DENTAL: Alaska
Population Group Listing

Population Group

Low Inc—North Anchorage
Census Area—Anchorage Borough
Parts:
C.T. 6
C.T. 7.01–7.03
C.T. 8.01

DENTAL: Arizona
County Listing

County Name

*Apache
Service Area: Fort Defiance
*Cochise
Service Area: Elfrida
*Coconino
Service Area: Williams
Population Group: Low Inc—Flagstaff
*Greenlee
*La Paz
Maricopa
Population Group: Low Inc—Buckeye
Population Group: Low Inc—Wickenburg
Population Group: Low Inc—S Mountain
Facility: FCI Phoenix
Facility: FCI Tucson
Facility: Maricopa Co Jails
Pima
Service Area: South Tucson
Facility: FCI Tucson
Pinal
Service Area: Florence
Service Area: San Manuel
Population Group: Low Inc—Coolidge/Eloy/Casa Grande
*Santa Cruz
Yuma
Service Area: Wellton
Population Group: Low Inc—Somerton
Population Group: Low Income—Yuma

DENTAL: Arizona
Service Area Listing

Service Area Name

Elfrida
County—Cochise
Parts:
C.T. 5
Florence
County—Pinal
Parts:
C.T. 8–9
Fort Defiance
County—Apache
Parts:
Fort Apache Division
San Manuel
County—Pinal
Parts:
C.T. 6–7
South Tucson
County—Pima
Parts:
C.T. 1–12
C.T. 13.01–13.02
C.T. 14
C.T. 20–24
C.T. 25.01–25.02
C.T. 37.01–37.03
C.T. 38–39
C.T. 41.02–41.04
C.T. 43.01
C.T. 43.09
Wellton
County—Yuma
Parts:
C.T. 105–107
C.T. 112–113
Williams
County—Coconino
Parts:
C.T. 17–19

DENTAL: Arizona
Population Group Listing

Population Group

Low Inc—Buckeye 1
County—Maricopa
Parts:
C.T. 506–507
Low Inc—Flagstaff
County—Coconino
Parts:
C.T. 1–15
Low Inc—S Mountain
County—Maricopa
Parts:
C.T. 1152–1161
C.T. 1162.02–1162.04
C.T. 1163–1165
C.T. 1166.01–1166.02
C.T. 1167.02–1167.04
Low Inc—Somerton
County—Yuma
Parts:
Somerton CCD
Low Inc—Wickenburg
County—Maricopa
Parts:
C.T. 405.02
C.T. 405.09
Low Inc—Coolidge/Eloy/Casa Grande
County—Pinal
Parts:
Casa Grande CCD
Coolidge CCD
Eloy CCD
Manicopa-Stanfield
Low Income—Yuma
County—Yuma
Parts:
Yuma CCD

DENTAL: Arizona
Facility Listing

Facility Name

FCI Phoenix
County—Maricopa
FCI Tucson
County—Pima
FCI Tucson
County—Maricopa
Maricopa Co Jails
County—Maricopa

DENTAL: Arkansas
County Listing

County Name

*Ashley
Service Area: Parkdale
*Calhoun
*Cleveland
*Fulton
*Grant
Jefferson
Service Area: Altheimer
*Lafayette
*Lee
*Lincoln
*Monroe
*Montgomery
*Newton
*Perry
*Phillips
*Poinsett
Service Area: Marked Tree
*Prairie

DENTAL: Arkansas
County Listing

County Name

Pulaski
  Service Area: College Station
*Searcy
*Sharp
*Woodruff

DENTAL: Arkansas
Service Area Listing

Service Area Name

Altheimer
  County—Jefferson
    Parts:
      C.T. 1.85
      C.T. 7
College Station
  County—Pulaski
    Parts:
      C.T. 2
      C.T. 4–5
      C.T. 40.01
      C.T. 40.03
      C.T. 40.05
Marked Tree
  County—Poinsett
    Parts:
      Greenwood Township
      Little River Township
      Tyronza Township
Parkdale
  County—Ashley
    Parts:
      Beech Creek Township
      De Bastrop Township
      Portland Township
      Wilmot Township

DENTAL: California
County Listing

County Name

Alameda
  Population Group: Low Inc—Fruitvale (MSSA 2d)
Butte
  Population Group: Low Inc—Oroville/Palermo(MSSA 10)
*Colusa
  Population Group: Low Inc/MFW—Colusa Co
Contra Costa
  Population Group: Low Inc—Antioch/Pittsburg North (MSSA
*Del Norte
  Population Group: Low Inc—Del Norte Co (MSSA 19)
Fresno
  Population Group: Low Inc—San Joaquin/Tranquility
  Population Group: Low Inc—Reedley (MSSA 34)
*Glenn
  Population Group: Low Inc—Willows
*Humboldt
  Service Area: Garberville/Redway (MSSA 44)
  Population Group: Low Inc—Trinity/Klamath
  Population Group: Low Inc—Rio Dell (MSSA 43)
  Population Group: Low Inc—Fortuna (MSSA 42)

DENTAL: California
County Listing

County Name

  Population Group: Low Inc—Ferndale (MSSA 41)
  Population Group: Low Inc—Arcata/North Coastal (MSSA 39)
*Imperial
  Service Area: Calexico—MSSA 49
  Service Area: East Imperial—MSSA 47
Kern
  Service Area: Arvin-Lamont (MSSA 61)
  Service Area: Buttonwillow
  Population Group: Low Inc—Mcfarland/Delano (MSSA 60)
  Population Group: Low Inc—Shafter/Wasco (MSSA 58)
  Population Group: Low Inc—N Westside/Taft (MSSA 57.2)
*Lake
  Population Group: Low Inc—Lakeport (MSSA 70)
*Lassen
  Population Group: Low Inc—Susanville
Los Angeles
  Population Group: Low Inc—Watts/Willowbrook
  Facility: FCI Terminal Island
*Mendocino
  Service Area: Covelo
  Population Group: Low Income—Laytonville (MSSA 90)
Monterey
  Service Area: Greenfield/Soledad/Gonzales
  Service Area: King City
  Population Group: Low-Income—N. Salinas (MSSA 109.2a)
San Diego
  Population Group: Low Inc—Fallbrook (MSSA 160)
San Francisco
  Population Group: Low Inc—South Of Market (MSSA 162c)
Santa Barbara
  Facility: USP Lompoc
Shasta
  Service Area: Castella (MSSA 187)
  Service Area: French Gulch (MSSA 186)
  Population Group: Low Inc—Redding (MSSAS 189.1 & 189.2)
*Sierra
  Service Area: West Sierra (MSSA 192)
*Siskiyou
  Service Area: Tulake (MSSA 101.2)
Sonoma
  Service Area: Guerneville (MSSA 207)
*Tehama
  Population Group: Low Inc—Red Bluff (MSSAS 221 & 222)
*Trinity
  Service Area: Hayfork/Forest Glen/Peanut (MSSA 225)
  Service Area: L. Trinity/Helena/Salyer (MSSA 223)
  Service Area: Weaverville, Trinity Ctr (MSSA 224)
Tulare
  Population Group: Low Inc—Porterville (MSSA 231/232)
  Population Group: Low Inc—Visalia (MSSA 233a)

DENTAL: California
Service Area Listing

Service Area Name

Arvin-Lamont(MSSA 61)
  County—Kern
    Parts:
      C.T. 62–64
Buttonwillow
  County—Kern
    Parts:
      C.T. 37
Calexico—MSSA 49
  County—Imperial
    Parts:
      C.T. 119–122
Castella (MSSA 187)
  County—Shasta
    Parts:
      C.T. 125
Covelo
  County—Mendocino
    Parts:
      C.T. 101
East Imperial—MSSA 47
  County—Imperial
    Parts:
      C.T. 124
French Gulch (MSSA 186)
  County—Shasta
    Parts:
      C.T. 124
Garberville/Redway (MSSA 44)
  County—Humboldt
    Parts:
      C.T. 113
Greenfield/Soledad/Gonzales
  County—Monterey
    Parts:
      C.T. 108.98
      C.T. 109
      C.T. 111–112
Guerneville (MSSA 207)
  County—Sonoma
    Parts:
      C.T. 1537.01–1537.02
      C.T. 1543
      C.T. 1543.99
Hayfork/Forest Glen/Peanut (MSSA 225)
  County—Trinity
    Parts:
      C.T. 3.98
King City
  County—Monterey
    Parts:
      C.T. 113
      C.T. 114.02
L. Trinity/Helena/Salyer (MSSA 223)
  County—Trinity
    Parts:
      C.T. 2
Tulake (MSSA 101.2)
  County—Siskiyou
    Parts:
      C.T. 1
Weaverville, Trinity Ctr (MSSA 224)
  County—Trinity
    Parts:
      C.T. 1
West Sierra (MSSA 192)
  County—Sierra
    Parts:
      West Sierra Division

DENTAL: California
Population Group Listing

Population Group

Low Inc—Antioch/Pittsburg North (MSSA
County—Contra Costa
Parts:
C.T. 3050
C.T. 3071.02
C.T. 3072.01–3072.02
C.T. 3072.04–3072.05
C.T. 3090
C.T. 3100
C.T. 3110
C.T. 3120
C.T. 3132.01–3132.02
C.T. 3141.01–3141.02
C.T. 3142
C.T. 3142.98
C.T. 3552
Low Inc—Arcata/North Coastal (MSSA 39)
County—Humboldt
Parts:
C.T. 10–11
C.T. 102–105
Low Inc—Del Norte Co (MSSA 19)
County—Del Norte
Parts:
C.T. 1
C.T. 1.99–2.00
Low Inc—Fallbrook (MSSA 160)
County—San Diego
Parts:
C.T. 187
C.T. 188.01–188.03
C.T. 189.01–189.02
C.T. 190
Low Inc—Ferndale (MSSA 41)
County—Humboldt
Parts:
C.T. 112
Low Inc—Fortuna (MSSA 42)
County—Humboldt
Parts:
C.T. 108–110
Low Inc—Fruitvale (MSSA 2d)
County—Alameda
Parts:
C.T. 4061–4062
C.T. 4065–4066
C.T. 4070–4075
Low Inc—Lakeport (MSSA 70)
County—Lake
Parts:
C.T. 1–5
C.T. 10
Low Inc—Mcfarland/Delano (MSSA 60)
County—Kern
Parts:
C.T. 46–48
C.T. 49.01–49.02
C.T. 50
Low Inc—N Westside/Taft (MSSA 57.2)
County—Kern
Parts:
C.T. 33.03–33.04
C.T. 34–36
Low Inc—Porterville (MSSA 231/232)
County—Tulare
Parts:
C.T. 27
C.T. 33–41
C.T. 45
Low Inc—Red Bluff (MSSAS 221 & 222)
County—Tehama
Parts:

DENTAL: California
Population Group Listing

Population Group

C.T. 2
C.T. 4–11
C.T. 12.98
Low Inc—Redding (MSSAS 189.1 & 189.2)
County—Shasta
Parts:
C.T. 101–123
Low Inc—Reedley (MSSA 34)
County—Fresno
Parts:
C.T. 63
C.T. 65
C.T. 66.01–66.02
C.T. 67
C.T. 68.01–68.02
C.T. 69
Low Inc—Rio Dell (MSSA 43)
County—Humboldt
Parts:
C.T. 111
Low Inc—San Joaquin/Tranquility
County—Fresno
Parts:
C.T. 82
Low Inc—Shafter/Wasco (MSSA 58)
County—Kern
Parts:
C.T. 39–45
Low Inc—South Of Market (MSSA 162c)
County—San Francisco
Parts:
C.T. 122–125
C.T. 176.02
C.T. 176.98
C.T. 177–178
C.T. 179.01–179.02
C.T. 179.99–180.00
C.T. 201.98
C.T. 226–229
C.T. 607
Low Inc—Susanville
County—Lassen
Parts:
Honey Lake Div
Madeline Plains Div
Susanville Div
Westwood Div
Low Inc—Trinity/Klamath
County—Humboldt
Parts:
C.T. 101
Low Inc—Visalia (MSSA 233a)
County—Tulare
Parts:
C.T. 9
C.T. 10.01–10.02
C.T. 11–13
C.T. 17.01–17.02
C.T. 18–19
C.T. 20.01–20.05
Low Inc—Watts/Willowbrook
County—Los Angeles
Parts:
C.T. 2408–2410
C.T. 2420–2423
C.T. 2426–2427
C.T. 2430–2431
C.T. 5352
C.T. 5404
C.T. 5406–5408
C.T. 5412–5414
Low Inc—Willows

DENTAL: California
Population Group Listing

Population Group

County—Glenn
Parts:
C.T. 103–105
Low Inc–Oroville/Palermo (MSSA 10)
County—Butte
Parts:
C.T. 25–33
Low Inc/MFW—Colusa Co
County—Colusa
Parts:
Low Income/MFW
Low Income—Laytonville (MSSA 90)
County—Mendocino
Parts:
C.T. 102
Low–Income—N. Salinas (MSSA 109.2a)
County—Monterey
Parts:
C.T. 1–9
C.T. 13
C.T. 17–18
C.T. 105.01–105.02
C.T. 106.01–106.02

DENTAL: California
Facility Listing

Facility Name

FCI Terminal Island 1
County—Los Angeles
USP Lompoc
County—Santa Barbara

DENTAL: Colorado
County Listing

County Name

Adams
Service Area: Commerce City
Population Group: Low Income—Northwest Adams
*Alamosa
Population Group: Low Inc—Alamosa Co
*Conejos
*Costilla
Denver
Facility: Denver Reception & Diagnostic Center
Facility: Denver Women's C.F.
Douglas
Facility: FCI Englewood
*Fremont
Facility: Centennial C.F.
Facility: Colorado State Penn
Facility: Colorado Territorial C.F.
Facility: Florence Admax USP
Facility: Freemont C.F.
Facility: FCI Florence
Facility: USP Florence
*Kiowa
*Morgan
Population Group: Low Income/MSFW—Morgan Co
*Prowers
Population Group: Low Inc—Prowers Co
Pueblo
Population Group: Low Inc/MFW—Pueblo Co
*Saguache

DENTAL: Colorado
Service Area Listing

Service Area Name
Commerce City
County—Adams
Parts:
C.T. 87.03
C.T. 87.05–87.06
C.T. 88.01–88.02
C.T. 89.01
C.T. 89.52

DENTAL: Colorado
Population Group Listing

Population Group
Low Inc—Alamosa Co
County—Alamosa
Parts:
Low Income
Migrant Farmworker
Low Inc—Prowers Co
County—Prowers
Parts:
Prowers
Low Inc/MFW—Pueblo Co
County—Pueblo
Parts:
Low Income/MFW
Low Income—Northwest Adams
County—Adams
Parts:
C.T. 90.01–90.03
C.T. 93.06–93.10
C.T. 93.15–93.18
C.T. 94.01
C.T. 94.07
C.T. 95.01–95.02
C.T. 95.53
C.T. 96.03–96.06
C.T. 97.50
Low Income/MSFW—Morgan Co
County—Morgan
Parts:
Low-Income/MSFW

DENTAL: Colorado
Facility Listing

Facility Name
Centennial C.F.
County—Fremont
Colorado State Penn
County—Fremont
Colorado Territorial C.F.
County—Fremont
Denver Reception & Diagnostic Center
County—Denver
Denver Women's C.F.
County—Denver
Florence Admax USP
County—Fremont
Freemont C.F.
County—Fremont
FCI Englewood
County—Douglas
FCI Florence
County—Fremont
USP Florence
County—Fremont

DENTAL: Connecticut
County Listing

County Name
Fairfield
Service Area: Central/East Bridgeport
Service Area: Southwest Bridgeport
Population Group: Low Inc—Southend Stamford
Population Group: Low Inc—Danbury
Hartford
Service Area: Charter Oak/Frog Hollow/Parkville
Service Area: North/Northcentral Hartford
Population Group: Low Inc—East Hartford
Population Group: Low Inc—Central New Britain
Middlesex
Population Group: Low Inc/Homeless—Cent Middletown
New Haven
Service Area: S. Cent Waterbury
Population Group: Low Inc—Meriden
New London
Population Group: Low Inc—Norwich
Population Group: Low Inc—New London (Inner City)
Windham
Population Group: Low Inc—Town Of Windham

DENTAL: Connecticut
Service Area Listing

Service Area Name
Central/East Bridgeport
County—Fairfield
Parts:
C.T. 713–717
C.T. 735–736
C.T. 738–744
Charter Oak/Frog Hollow/Parkville
County—Hartford
Parts:
C.T. 5001–5004
C.T. 5019
C.T. 5027–5030
C.T. 5043
C.T. 5045–5046
C.T. 5049
North/Northcentral Hartford
County—Hartford
Parts:
C.T. 5008–5015
C.T. 5017–5018
C.T. 5035
C.T. 5037
S. Cent Waterbury
County—New Haven
Parts:
C.T. 3501–3506
C.T. 3508
C.T. 3512
C.T. 3514
C.T. 3517
Southwest Bridgeport
County—Fairfield
Parts:
C.T. 702–712

DENTAL: Connecticut
Population Group Listing

Population Group
Low Inc—Central New Britain 2
County—Hartford
Parts:
C.T. 4159
C.T. 4161–4162
C.T. 4171
Low Inc—Danbury
County—Fairfield
Parts:
C.T. 2012
C.T. 2101
Low Inc—East Hartford
County—Hartford
Parts:
C.T. 5102–5104
C.T. 5106
Low Inc—Meriden
County—New Haven
Parts:
C.T. 1701.01
C.T. 1702.01–1702.02
C.T. 1702.02
C.T. 1703
C.T. 1710
C.T. 1713–1715
Low Inc—New London (Inner City)
County—New London
Parts:
C.T. 6901
C.T. 6901.99–6902.00
C.T. 6902.99–6903.00
C.T. 6904–6906
C.T. 6906.99–6907.00
C.T. 6907.99–6908.00
C.T. 6909
Low Inc—Norwich
County—New London
Parts:
C.T. 6961
C.T. 6964–6970
Low Inc—Southend Stamford
County—Fairfield
Parts:
C.T. 201
C.T. 214–215
C.T. 222–223
Low Inc—Town Of Windham
County—Windham
Parts:
Windham Town
Low Inc/Homeless—Cent Middletown
County—Middlesex
Parts:
C.T. 5415–5418

DENTAL: Delaware
County Listing

County Name
New Castle
Service Area: Southbridge
Service Area: Wilmington
*Sussex

DENTAL: Delaware
Service Area Listing

Service Area Name
Southbridge
County—New Castle
Parts:
C.T. 19
C.T. 153–155
Wilmington
County—New Castle

DENTAL: Delaware
Service Area Listing

Service Area Name

Parts:
C.T. 1
C.T. 6.01–6.02
C.T. 7–9
C.T. 15–17
C.T. 20–23

DENTAL: District Of Columbia
County Listing

County Name

Dist Of Columbia
Population Group: Homeless—Downtown D.C.

DENTAL: District Of Columbia
Population Group Listing

Population Group

Homeless—Downtown D.C.
County—Dist Of Columbia
Parts:
C.T. 40.01–40.02
C.T. 41
C.T. 42.02
C.T. 46–47
C.T. 48.01–48.02
C.T. 49.01–49.02
C.T. 50–51
C.T. 52.10
C.T. 52.20
C.T. 53.01–53.02
C.T. 54.01–54.02
C.T. 55.01–55.02
C.T. 56
C.T. 57.01–57.02
C.T. 58–59

DENTAL: Florida
County Listing

County Name

Alachua
Facility: Gainesville Corr Inst
*Baker
Facility: Baker Corr Inst
Bradford
Facility: Fl State Prison
Facility: Lawtey Corr Inst
Brevard
Facility: Brevard Corr Inst
Broward
Facility: Broward Corr Inst
*Calhoun
Facility: Calhoun Corr Inst
Charlotte
Population Group: Low Inc—Charlotte
Facility: Charlotte Corr Inst
*Citrus
Population Group: Low Inc—Citrus
Collier
Service Area: Everglades
Service Area: Immokalee
*Columbia
Facility: Columbia Corr Inst
Dade
Service Area: Homestead
Service Area: Model Cities
Population Group: Low Inc—South Beach
Population Group: Low Inc—North Beach
Facility: Dade Corr Inst
Facility: FCI Miami

DENTAL: Florida
County Listing

County Name

Facility: S Fl Reception Ctr
*De Soto
Population Group: Low Inc/MFW—Desoto
Facility: Desoto Corr Inst
*Dixie
Population Group: Low Inc—Dixie
Facility: Cross City Corr Inst
Duval
Population Group: Low Inc—NW Jacksonville
Escambia
Population Group: Low Inc—NW Escambia
Facility: Century Corr Inst
*Franklin
Population Group: Low Inc—Franklin
Gadsden
Population Group: Low Inc/MFW—Gadsden Co
*Gilchrist
Population Group: Low Inc—Gilchrist
Facility: Lancaster Corr Inst
*Glades
*Gulf
Population Group: Low Inc—Gulf Co
Facility: Gulf Corr Inst
*Hamilton
Population Group: Low Inc—Hamilton Co
Facility: Hamilton Corr Inst
*Hardee
Population Group: Low Inc/MFW—Hardee Co
Facility: Hardee Corr Inst
*Hendry
Hernando
Population Group: Low Inc—Hernando Co
*Highlands
Population Group: Low Inc/MFW—Highlands Co
Facility: Avon Park Corr Inst
Hillsborough
Population Group: Low Inc—Suitcase City
Population Group: Low Inc/MFW—Ruskin/Apollo Beach
Population Group: Low Inc/MFW—Plant City/Dover
*Holmes (g)
Facility: Holmes Corr Inst
*Indian River
Population Group: Low Inc/MFW Fellsmere
Facility: Hendry Corr Inst
Facility: Indian River Corr Inst
*Jackson
Facility: Apalachee Corr Inst
Facility: FCI—Marianna
Facility: Jackson Corr Inst
Facility: River Junction Corr Inst
*Jefferson
Population Group: Low Inc—Jefferson
Facility: Jefferson Corr Inst
*Lafayette
Population Group: Low Inc—Lafayette
Facility: Mayo Corr Inst
Lake
Population Group: MFW—Lake Co
Facility: Lake Corr Inst
Leon
Population Group: Low Inc—Bond Community
*Levy
Population Group: Low Inc—Levy
*Liberty
Facility: Liberty Corr Inst

DENTAL: Florida
County Listing

County Name

*Madison
Population Group: Low Inc—Madison
Facility: Madison Corr Inst
Manatee
Population Group: MFW—Manatee
Marion
Facility: Florida Corr Inst
Martin
Service Area: Indiantown
Facility: Martin Corr Inst
Nassau
Population Group: Low Inc/MFW—Nassau
Okaloosa
Facility: Okaloosa Corr Inst
*Okeechobee
Population Group: Low Inc—Okeechobee
Orange
Facility: C Fl Reception Ctr
Palm Beach
Population Group: Low Inc—West Palm Beach
Population Group: Low Inc/MFW—Belle Glade/Pahokee
Pasco
Service Area: Eastern Pasco
Facility: Zephyrhills Corr Inst
Pinellas
Facility: Pinellas Cty Correctional Institution
Polk
Service Area: Frostproof
Facility: Polk Corr Inst
*Putnam
Population Group: Low Inc—Putnam
Santa Rosa
Facility: Santa Rosa Corr Inst
St Lucie
Population Group: Low Inc—Central Ft. Pierce
*Sumter
Population Group: Low Inc—Sumter
Facility: FCC Coleman
Facility: Sumter Corr Inst
*Suwannee
Population Group: Low Inc—Suwannee Co
*Taylor
Population Group: Low Inc—Taylor
*Union
Facility: N Fl Reception Ctr
Facility: Union Corr Inst
Volusia
Facility: Tomoka Corr Inst
*Wakulla
Population Group: Low Inc—Wakulla Co
*Walton (g)
Facility: Walton Corr Inst
*Washington
Population Group: Low Inc—Washington Co

DENTAL: Florida
Service Area Listing

Service Area Name

Eastern Pasco
County—Pasco
Parts:
C.T. 320.01–320.02
C.T. 321.01–321.02
C.T. 322–329
C.T. 330.01–330.04
C.T. 331
Everglades

DENTAL: Florida
Service Area Listing

Service Area Name

County—Collier
Parts:
C.T. 111.01–111.02
Frostproof
County—Polk
Parts:
Frostproof Division
Homestead
County—Dade
Parts:
C.T. 104–105
C.T. 106.02
C.T. 107.01
C.T. 108–109
C.T. 110.01–110.02
C.T. 111
C.T. 112.01–112.02
C.T. 113
C.T. 114.98
Immokalee
County—Collier
Parts:
C.T. 112.02–112.03
C.T. 113–114
Indiantown
County—Martin
Parts:
C.T. 18
Model Cities
County—Dade
Parts:
C.T. 4.08
C.T. 8.01–8.02
C.T. 9.01–9.03
C.T. 10.01–10.04
C.T. 11.03
C.T. 15.01–15.02
C.T. 16.01–16.02
C.T. 17.01–17.02
C.T. 18.01–18.03
C.T. 19.01
C.T. 19.03–19.04
C.T. 23

DENTAL: Florida
Population Group Listing

Population Group

Low Inc—Washington Co
County—Washington
Parts:
Low Income
Low Inc—Bond Community
County—Leon
Parts:
C.T. 1
C.T. 4–6
C.T. 10.01
C.T. 11.01–11.02
C.T. 12–14
Low Inc—Central Ft. Pierce
County—St Lucie
Parts:
C.T. 1
C.T. 1.99–2.00
C.T. 3–5
C.T. 9.02
Low Inc—Charlotte
County—Charlotte
Parts:
Low Income
Low Inc—Citrus

DENTAL: Florida
Population Group Listing

Population Group

County—Citrus
Parts:
Low Income
Low Inc—Dixie
County—Dixie
Parts:
Low Income
Low Inc—Franklin
County—Franklin
Parts:
Low Income
Low Inc—Gilchrist
County—Gilchrist
Parts:
Low Income
Low Inc—Gulf Co
County—Gulf
Parts:
Low Income
Low Inc—Hamilton Co
County—Hamilton
Parts:
Low Income
Low Inc—Hernando Co
County—Hernando
Parts:
Low Income
Low Inc—Jefferson
County—Jefferson
Parts:
Low Inc
Low Inc—Lafayette
County—Lafayette
Parts:
Low Income
Low Inc—Levy
County—Levy
Parts:
Low Income
Low Inc—Madison
County—Madison
Parts:
Low Income
Low Inc—North Beach
County—Dade
Parts:
C.T. 39.01–39.02
C.T. 39.04–39.06
Low Inc—NW Escambia
County—Escambia
Parts:
C.T. 38–40
Low Inc—NW Jacksonville
County—Duval
Parts:
C.T. 1
C.T. 1.99–2.00
C.T. 2.99–3.00
C.T. 3.99–4.00
C.T. 5
C.T. 9–19
C.T. 26–29
C.T. 107–109
C.T. 112–116
C.T. 118
C.T. 121
Low Inc—Okeechobee
County—Okeechobee
Parts:
Low Income
Low Inc—Putnam
County—Putnam

DENTAL: Florida
Population Group Listing

Population Group

Parts:
Low Income
Low Inc—South Beach
County—Dade
Parts:
C.T. 42–45
C.T. 45.99
Low Inc—Suitcase City
County—Hillsborough
Parts:
C.T 3
C.T. 2
C.T. 4
C.T. 6–9
C.T. 105
C.T. 108.05–108.07
C.T. 112.06
Low Inc—Sumter
County—Sumter
Parts:
Low Income
Low Inc—Suwannee Co
County—Suwannee
Parts:
Low Income
Low Inc—Taylor
County—Taylor
Parts:
Low Income
Low Inc—Wakulla Co
County—Wakulla
Parts:
Low Income
Low Inc—West Palm Beach
County—Palm Beach
Parts:
C.T. 20–24
C.T. 26
Low Inc/MFW—Belle Glade/Pahokee
County—Palm Beach
Parts:
C.T. 80.01–80.02
C.T. 81.01–81.02
C.T. 82.01–82.03
C.T. 83.01–83.02
Low Inc/MFW—Desoto
County—De Soto
Parts:
Low Income/MFW
Low Inc/MFW—Gadsden Co
County—Gadsden
Parts:
Low Income/Migrant Farmw
Low Inc/MFW—Hardee Co
County—Hardee
Parts:
Low Income/Migrant Farmw
Low Inc/MFW—Highlands Co
County—Highlands
Parts:
Low Income/MFW
Low Inc/MFW—Nassau
County—Nassau
Parts:
Low Income/MFW
Low Inc/MFW—Plant City/Dover
County—Hillsborough
Parts:
C.T. 101.02–101.04
C.T. 124–131
Low Inc/MFW—Ruskin/Apollo Beach
County—Hillsborough

DENTAL: Florida
Population Group Listing

Population Group

Parts:
C.T. 140.02
C.T. 141.01
C.T. 141.03–141.04
Low Inc/MFW Fellsmere
County—Indian River
Parts:
Fellsmere Division
MFW—Lake Co
County—Lake
Parts:
MFW
MFW—Manatee
County—Manatee
Parts:
C.T. 13
C.T. 14.01–14.02
C.T. 15.01
C.T. 16
C.T. 19.01
C.T. 19.03–19.04

DENTAL: Florida
Facility Listing

Facility Name

Apalachee Corr Inst 3
County—Jackson
Avon Park Corr Inst
County—Highlands
Baker Corr Inst
County—Baker
Brevard Corr Inst
County—Brevard
Broward Corr Inst
County—Broward
C Fl Reception Ctr
County—Orange
Calhoun Corr Inst
County—Calhoun
Century Corr Inst
County—Escambia
Charlotte Corr Inst
County—Charlotte
Columbia Corr Inst
County—Columbia
Cross City Corr Inst
County—Dixie
Dade Corr Inst
County—Dade
Desoto Corr Inst
County—De Soto
Fl State Prison
County—Bradford
Florida Corr Inst
County—Marion
FCC Coleman
County—Sumter
FCI—Marianna
County—Jackson
FCI Miami
County—Dade
Gainesville Corr Inst
County—Alachua
Gulf Corr Inst
County—Gulf
Hamilton Corr Inst
County—Hamilton
Hardee Corr Inst
County—Hardee
Hendry Corr Inst
County—Indian River

DENTAL: Florida
Facility Listing

Facility Name

Holmes Corr Inst
County—Holmes
Indian River Corr Inst
County—Indian River
Jackson Corr Inst
County—Jackson
Jefferson Corr Inst
County—Jefferson
Lake Corr Inst
County—Lake
Lancaster Corr Inst
County—Gilchrist
Lawtey Corr Inst
County—Bradford
Liberty Corr Inst
County—Liberty
Madison Corr Inst
County—Madison
Martin Corr Inst
County—Martin
Mayo Corr Inst
County—Lafayette
N Fl Reception Ctr
County—Union
Okaloosa Corr Inst
County—Okaloosa
Pinellas Cty Correctional Institution
County—Pinellas
Polk Corr Inst
County—Polk
River Junction Corr Inst
County—Jackson
S Fl Reception Ctr
County—Dade
Santa Rosa Corr Inst
County—Santa Rosa
Sumter Corr Inst
County—Sumter
Tomoka Corr Inst
County—Volusia
Union Corr Inst
County—Union
Walton Corr Inst
County—Walton
Zephyrhills Corr Inst
County—Pasco

DENTAL: Georgia
County Listing

County Name

*Atkinson
*Banks
*Ben Hill
Bibb
Facility: Middle Ga Corr Complex
*Brantley
*Brooks
Bryan
*Burke
*Butts (g)
Facility: Ga Diagnostic Prison
*Calhoun
Facility: Calhoun State Prison
*Camden
*Candler
*Charlton
Chatham
Service Area: NW Savannah
Facility: Costal State Prison
*Colquitt
Population Group: Low Inc—Colquitt

DENTAL: Georgia
County Listing

County Name

*Crawford
Dade
Population Group: Low Inc—Dade
*Dawson
Population Group: Low Inc—Dawson Co
De Kalb
Facility: Marietta Health Center
Facility: Metro State Prison
*Dodge
Facility: Dodge State Prison
Dougherty
Population Group: Low Inc—Dougherty
Forsyth
Facility: Phillips State Prison
Fulton
Service Area: Atlanta Southside
Service Area: West Atlanta
Facility: Douglas Health Center
Facility: Good Samaritan Hlth Ctr
Facility: Metro Corr Inst
Facility: Procare At Midtown, Inc.
Facility: Smyrna Health Center
Facility: USP Atlanta
*Greene
Population Group: Low Inc—Greene
*Hancock
Population Group: Low Inc—Hancock
Facility: Hancock State Prison
*Haralson
Population Group: Low Inc—Haralson
Harris
Henry
*Jenkins
*Lamar
Population Group: Low Inc—Lamar
*Liberty
*Lincoln
Population Group: Low Inc—Lincoln
*Long
*Macon
*Marion
*Murray
Population Group: Low Inc—Murray Co
Paulding
*Pike
Population Group: Low Inc—Pike
*Pulaski
*Putnam
*Randolph
*Stewart
Service Area: Stewart/Webster
*Sumter
Population Group: Low Inc—Sumter
*Talbot
*Tattnall
*Taylor
Twiggs
*Union
Population Group: Low Inc—Union Co
*Ware
Population Group: Low Inc—Ware Co
*Warren
*Washington
*Wayne
Facility: FCI—Jesup
*Webster
Service Area: Stewart/Webster
*Whitfield
Population Group: Low Inc—Whitfield
*Wilcox (g)
Facility: Wilcox State Prison
*Wilkinson

DENTAL: Georgia
County Listing

County Name

Population Group: Low Inc—Wilkinson Co
*Worth
Population Group: Low Inc—Worth

DENTAL: Georgia
Service Area Listing

Service Area Name

Atlanta Southside
County—Fulton
Parts:
C.T. 44
C.T. 46.95
C.T. 48
C.T. 49.95
C.T. 50
C.T. 52–53
C.T. 55.01–55.02
C.T. 56–58
C.T. 63–64
C.T. 67
C.T. 68.01–68.02
C.T. 69–73
NW Savannah
County—Chatham
Parts:
C.T. 1
C.T. 3
C.T. 6.01
C.T. 8–13
C.T. 15
C.T. 17–28
C.T. 32
C.T. 33.01–33.02
C.T. 36.01–36.02
C.T. 37
C.T. 44–45
C.T. 101.01
C.T. 105.01–105.02
C.T. 106.01
C.T. 106.03–106.04
Stewart/Webster
County—Stewart
County—Webster
West Atlanta
County—Fulton
Parts:
C.T. 8
C.T. 22–26
C.T. 36–41
C.T. 42.95
C.T. 43
C.T. 60–62
C.T. 66.02
C.T. 78.04
C.T. 80
C.T. 81.01–81.02
C.T. 82.01–82.02
C.T. 83.01–83.02
C.T. 84–85
C.T. 86.01–86.02
C.T. 87.01–87.02
C.T. 88

DENTAL: Georgia
Population Group Listing

Population Group

Low Inc—Colquitt
County—Colquitt
Parts:
Low Income
Low Inc—Dade
County—Dade
Parts:
Low Income
Low Inc—Dawson Co
County—Dawson
Parts:
Low Income
Low Inc—Dougherty
County—Dougherty
Parts:
Low Income
Low Inc—Greene
County—Greene
Parts:
Low Income
Low Inc—Hancock
County—Hancock
Parts:
Low Income
Low Inc—Haralson
County—Haralson
Parts:
Low Income
Low Inc—Lamar
County—Lamar
Parts:
Low Income
Low Inc—Lincoln
County—Lincoln
Parts:
Low Income
Low Inc—Murray Co
County—Murray
Parts:
Low Income
Low Inc—Pike
County—Pike
Parts:
Low Income
Low Inc—Sumter
County—Sumter
Parts:
Low Income
Low Inc—Union Co
County—Union
Parts:
Low Income
Low Inc—Ware Co
County—Ware
Parts:
Low Income
Low Inc—Whitfield
County—Whitfield
Parts:
Low Income
Low Inc—Wilkinson Co
County—Wilkinson
Parts:
Low Income
Low Inc—Worth
County—Worth
Parts:
Low Income

DENTAL: Georgia
Facility Listing

Facility Name

Calhoun State Prison
County—Calhoun
Costal State Prison
County—Chatham
Dodge State Prison
County—Dodge
Douglas Health Center
County—Fulton
FCI—Jesup
County—Wayne
Ga Diagnostic Prison
County—Butts
Good Samaritan Hlth Ctr
County—Fulton
Hancock State Prison
County—Hancock
Marietta Health Center
County—De Kalb
Metro Corr Inst
County—Fulton
Metro State Prison
County—De Kalb
Middle Ga Corr Complex
County—Bibb
Phillips State Prison
County—Forsyth
Procare At Midtown, Inc.
County—Fulton
Smyrna Health Center
County—Fulton
USP Atlanta
County—Fulton
Wilcox State Prison
County—Wilcox

DENTAL: Hawaii
County Listing

County Name

*Hawaii
Population Group: Low Inc—Hawaii
Honolulu
Population Group: Low Inc—Kalihi–Polama
*Maui
Service Area: Hana/Haiku

DENTAL: Hawaii
Service Area Listing

Service Area Name

Hana/Haiku
County—Maui
Parts:
C.T. 301–302

DENTAL: Hawaii
Population Group Listing

Population Group

Low Inc—Hawaii 1
County—Hawaii
Parts:
Low Income
Low Inc—Kalihi-Polama
County—Honolulu
Parts:
C.T. 51–57
C.T. 57.99–58.00
C.T. 59–61
C.T. 62.01–62.02
C.T. 63.01–63.02
C.T. 64.01–64.02
C.T. 65–66

DENTAL: Idaho
County Listing

County Name

Ada
Population Group: Low Inc—Urban Boise City
*Adams
*Bannock
Population Group: Low Inc/MFW—Bannock C0
*Benewah
Population Group: Low Inc—Benewah Co
*Bingham
Population Group: Low Inc/MFW—Bingham Co
*Boise
Population Group: Low Inc—Boise Co
*Bonner
Population Group: Low Inc/MFW—Bonner Co
*Boundary
Population Group: Low Inc—Boundary Co
*Butte
Population Group: Low Inc/MFW—Butte Co
*Camas
Canyon
Population Group: Low Inc/MFW—S Treasure Valley
*Caribou
Population Group: Low Inc/MFW—Caribou Co
*Clark
*Elmore
Population Group: Low Inc/MFW—Elmore Co
*Fremont
Population Group: Low-Inc/MFW—Fremont Co
*Gem
Population Group: Low Inc/MFW—N Treasure Valley
*Gooding
Population Group: Low -Inc/MFW—Gooding Co
*Idaho
*Jerome
Population Group: Low Inc/MFW—Jerome Co
*Kootenai
Population Group: Low Inc—Kootenai
*Lemhi
Population Group: Low Inc—Lemhi Co
*Lincoln
*Nez Perce
Population Group: Nez Perce Co—Low Inc/MFW
*Oneida
Population Group: Low Inc—Oneida Co
*Owyhee
Service Area: Bruneau
Population Group: Low Inc/MFW—S Treasure Valley
*Payette
Population Group: Low Inc/MFW—N Treasure Valley
*Power
Population Group: Low Inc/MFW—Power Co
*Shoshone
Population Group: Low Inc—Shoshone Co
*Teton
Population Group: Low Inc/MFW—Teton Co
*Twin Falls

DENTAL: Idaho
County Listing

County Name

Population Group: Low Inc/MFW—Twin Falls Co
*Valley
Population Group: Low Inc—Valley Co
*Washington
Population Group: Low Inc/MFW—N Treasure Valley

DENTAL: Idaho
Service Area Listing

Service Area Name

Bruneau
County—Owyhee
Parts:
Bruneau Division
Grand View Division
Murphy Division
Western Shoshone Division

DENTAL: Idaho
Population Group Listing

Population Group

Low -Inc/MFW—Gooding Co
County—Gooding
Parts:
Low—Inc/MFW—Gooding
Low Inc—Benewah Co
County—Benewah
Parts:
Low Income
Low Inc—Boise Co
County—Boise
Low Inc—Boundary Co
County—Boundary
Parts:
Low Inc
Low Inc—Kootenai
County—Kootenai
Parts:
Kootenai Co
Low Inc—Lemhi Co
County—Lemhi
Parts:
Lemhi Co
Low Inc—Oneida Co
County—Oneida
Parts:
Oneida Co
Low Inc—Shoshone Co
County—Shoshone
Parts:
Shoshone
Low Inc—Urban Boise City
County—Ada
Parts:
C.T. 1
C.T. 4–6
C.T. 9–11
C.T. 12.01–12.02
C.T. 14–21
C.T. 23.02
C.T. 23.10–23.11
Low Inc—Valley Co
County—Valley
Low Inc/MFW—Bannock C0
County—Bannock
Parts:
Low Income
Low Inc/MFW—Bingham Co
County—Bingham

DENTAL: Idaho
Population Group Listing

Population Group

Parts:
Low Income
Low Inc/MFW—Bonner Co
County—Bonner
Parts:
Low Inc/MFW
Low Inc/MFW—Butte Co
County—Butte
Parts:
Low Inc/MFW
Low Inc/MFW—Caribou Co
County—Caribou
Parts:
Low Inc/MFW
Low Inc/MFW—Elmore Co
County—Elmore
Low Inc/MFW—Jerome Co
County—Jerome
Parts:
Jerome Co
Low Inc/MFW—N Treasure Valley
County—Gem
Parts:
Low Income/MFW-Gem Co
County—Payette
Parts:
Low Income/MFW-Payette
County—Washington
Parts:
Low Income/MFW-Washingto
Low Inc/MFW—Power Co
County—Power
Parts:
Power Co
Low Inc/MFW—S Treasure Valley
County—Canyon
Parts:
Low Income
MFW
County—Owyhee
Parts:
Homedale CCD
Marsing CCD
Low Inc/MFW—Teton Co
County—Teton
Parts:
Teton Co
Low Inc/MFW—Twin Falls Co
County—Twin Falls
Parts:
Low Inc/MFW
Low-Inc/MFW—Fremont Co
County—Fremont
Parts:
Low Inc/MFW—Fremont
Nez Perce Co—Low Inc/MFW
County—Nez Perce
Parts:
Low Inc/MFW

DENTAL: Illinois
County Listing

County Name

*Adams
Population Group: Low Inc—Adams Co
*Alexander
Population Group: Medicaid Elig—Alexander Co
*Bond
Population Group: Medicaid Elig—Bond Co
Facility: FCI Greenville

DENTAL: Illinois
County Listing

County Name

*Bureau
Population Group: Low Inc—Bureau Co
*Carroll
Population Group: Medicaid Elig—Carroll Co
*Cass
Population Group: Medicaid Elig—Cass Co
Champaign
Population Group: Low Inc—Campaign Co
*Christian
Population Group: Medicaid Elig—Christian Co
Cook
Service Area: Riverdale (Chicago)
Population Group: Homeless—Chicago
Population Group: Low Inc—Chicago Heights
Population Group: Medicaid Elig—Near North (Chicago)
Population Group: Medicaid Elig—Northern Chicago
Population Group: Medicaid Elig—Midsouth Area (Chicago)
Population Group: Medicaid Elig—Near South (Chicago)
Population Group: Medicaid Elig—West Side (Chicago)
Population Group: Medicaid Elig—Midway Central (Chicago)
Population Group: Medicaid Elig—Midway East (Chicago)
Population Group: Medicaid Elig—Southeast South (Chicago
Population Group: Medicaid Elig—Southeast North (Chicago
Population Group: Medicaid Elig—Southwest East (Chicago)
Facility: Cook Co Dept Of Corr Comp
*Crawford
Population Group: Medicaid Elig—Crawford Co
*Cumberland
Population Group: Medicaid Elig—Cumberland Co
*De Witt
Population Group: Mediciad Elig—Dewitt Co
*Douglas
Population Group: Low Inc—Douglas Co
*Edgar
Population Group: Medicaid—Edgar
*Edwards
Population Group: Medicaid Elig—Edwards Co
*Fayette
Population Group: Medicaid—Fayette Co
*Ford
Population Group: Medicaid Elig—Ford Co
*Franklin
Population Group: Medicaid Elig—Franklin Co
*Gallatin
*Hamilton
Population Group: Medicaid Elig—Hamilton Co
*Hardin Co
*Henderson
Population Group: Low Inc—Henderson Co
*Jackson
Population Group: Medicaid Eligible—Jackson Co
*Jefferson
Population Group: Medicaid Elig—Jefferson Co
*Johnson
Population Group: Medicaid Elig—Johnson Co
Kankakee
Population Group: Medicaid Elig—Kankakee Co
*La Salle
Population Group: Medicaid Elig—LA Salle Co
*Lawrence
Population Group: Medicaid Elig—Lawrence Co
*Lee
Population Group: Medicaid Elig—Lee Co
*Livingston
Population Group: Medicaid Elig—Livingston Co
*Logan
Population Group: Medicaid Elig—Logan Co
Macon
Population Group: Medicaid Elig—Macon Co
*Macoupin
Population Group: Low Inc—Macoupin Co
Madison
Population Group: Medicaid Elig—Madison Co
*Marion
Population Group: Medicaid Elig—Marion Co
*Mason
Population Group: Medicaid Elig—Mason Co
*Massac
Population Group: Medicaid Elig—Massac Co
Menard
Population Group: Medicaid Elig—Menard Co
*Mercer
Population Group: Medicaid Elig—Mercer Co
*Montgomery
Population Group: Low Inc—Montgomery Co
*Moultrie
Population Group: Medicaid Elig—Moultrie Co
*Perry
Population Group: Medicaid Elig—Perry Co
*Pope
Population Group: Medicaid Eligible—Pope Co
*Pulaski
Population Group: Medicaid Elig—Pulaski Co
*Randolph
Population Group: Medicaid Elig—Randolph Co
*Saline
Population Group: Low Inc—Saline Co
Sangamon
Population Group: Low Inc—East Side Springfield
*Shelby
Population Group: Medicaid Elig—Shelby Co
St Clair
Population Group: Medicaid Eligible—St Clair Co
Tazewell
Facility: Pekin Corr Inst
*Union
Population Group: Medicaid Elig—Union Co
*Wabash
Population Group: Medicaid Elig—Wabash Co
*Washington
Population Group: Medicaid Elig—Washington Co
*Wayne
Population Group: Medicaid Elig—Wayne Co
*White
Population Group: Low Inc—White Co
*Whiteside
Population Group: Low Inc—Whiteside Co
*Williamson
Population Group: Medicaid Elig—Williamson Co
Facility: USP Marion
Winnebago
Population Group: Low Inc—SW Rockford
Facility: Milestone Dental Clinic

DENTAL: Illinois
Service Area Listing

Service Area Name

Riverdale (Chicago)
County—Cook
Parts:
C.T. 5401

DENTAL: Illinois
Population Group Listing

Population Group

Homeless—Chicago
County—Cook
Parts:
Comm. Area 77 (Edgewater
Comm. Area 32 (Loop)
Comm. Area 28 (Near West
Comm. Area 24 (West Town
Comm. Area 22 (Logan Squ
Comm. Area 8 (Near Nort
Comm. Area 7 (Lincoln P
Comm. Area 6 (Lakeview)
Comm. Area 5 (North Cen
Comm. Area 4 (Lincoln S
Comm. Area 3 (Uptown)
Low Inc—Adams Co
County—Adams
Parts:
Low Income
Low Inc—Bureau Co
County—Bureau
Parts:
Low Income
Low Inc—Campaign Co
County—Champaign
Parts:
Low Income
Low Inc—Chicago Heights
County—Cook
Parts:
C.T. 82.89–82.94
C.T. 82.97

DENTAL: Illinois
Population Group Listing

Population Group

Low Inc—Douglas Co
County—Douglas
Parts:
Low Income
Low Inc—East Side Springfield
County—Sangamon
Parts:
C.T. 8
C.T. 15–17
C.T. 23–24
Low Inc—Henderson Co
County—Henderson
Parts:
Low Income
Low Inc—Macoupin Co
County—Macoupin
Parts:
Low Income
Low Inc—Montgomery Co
County—Montgomery
Parts:
Low Income
Low Inc—Saline Co
County—Saline
Parts:
Low Income
Low Inc—SW Rockford
County—Winnebago
Parts:
C.T. 8
C.T. 10–13
C.T. 18–22
C.T. 23.01–23.02
C.T. 24–29
C.T. 31–32
Low Inc—White Co
County—White
Parts:
Low Income
Low Inc—Whiteside Co
County—Whiteside
Parts:
Low Income
Medicaid—Edgar
County—Edgar
Parts:
Medicaid Eligible
Medicaid—Fayette Co
County—Fayette
Parts:
Medicaid Eligible
Medicaid Elig—Alexander Co
County—Alexander
Parts:
Medicaid Eligible
Medicaid Elig—Bond Co
County—Bond
Parts:
Medicaid Eligible
Medicaid Elig—Carroll Co
County—Carroll
Parts:
Medicaid Eligible
Medicaid Elig—Cass Co
County—Cass
Parts:
Medicaid Eligible
Medicaid Elig—Christian Co
County—Christian
Parts:
Medicaid Eligible
Medicaid Elig—Crawford Co

DENTAL: Illinois
Population Group Listing

Population Group

County—Crawford
Parts:
Medicaid Eligible
Medicaid Elig—Cumberland Co
County—Cumberland
Parts:
Medicaid Eligible
Medicaid Elig—Edwards Co
County—Edwards
Parts:
Medicaid Eligible
Medicaid Elig—Ford Co
County—Ford
Parts:
Medicaid Eligible
Medicaid Elig—Franklin Co
County—Franklin
Parts:
Medicaid Eligible
Medicaid Elig—Hamilton Co
County—Hamilton
Parts:
Medicaid Elig Pop
Medicaid Elig—Jefferson Co
County—Jefferson
Parts:
Medicaid Eligible
Medicaid Elig—Johnson Co
County—Johnson
Parts:
Medicaid Eligible
Medicaid Elig—Kankakee Co
County—Kankakee
Parts:
Medicaid Eligible
Medicaid Elig—Lawrence Co
County—Lawrence
Parts:
Medicaid Eligible
Medicaid Elig—Lee Co
County—Lee
Parts:
Medicaid Eligible
Medicaid Elig—Livingston Co
County—Livingston
Parts:
Medicaid Eligible
Medicaid Elig—Logan Co
County—Logan
Parts:
Medicaid Eligible
Medicaid Elig—LA Salle Co
County—La Salle
Parts:
Medicaid Eligible
Medicaid Elig—Macon Co
County—Macon
Parts:
Medicaid Eligible
Medicaid Elig—Madison Co
County—Madison
Parts:
Medicaid Eligible
Medicaid Elig—Marion Co
County—Marion
Parts:
Medicaid Eligible
Medicaid Elig—Mason Co
County—Mason
Parts:
Medicaid Eligible
Medicaid Elig—Massac Co

DENTAL: Illinois
Population Group Listing

Population Group

County—Massac
Parts:
Medicaid Eligible
Medicaid Elig—Menard Co
County—Menard
Parts:
Medicaid Eligible
Medicaid Elig—Mercer Co
County—Mercer
Parts:
Medicaid Eligible
Medicaid Elig—Midsouth Area (Chicago)
County—Cook
Parts:
C.T. 3001–3020
C.T. 3101–3115
C.T. 5701–5705
C.T. 5801–5811
C.T. 5901–5907
C.T. 6001–6016
C.T. 6101–6122
Medicaid Elig—Midway Central (Chicago)
County—Cook
Parts:
C.T. 6301–6309
C.T. 6601–6611
Medicaid Elig—Midway East (Chicago)
County—Cook
Parts:
C.T. 6701–6720
C.T. 6801–6814
C.T. 7101–7115
Medicaid Elig—Moultrie Co
County—Moultrie
Parts:
Medicaid Elig
Medicaid Elig—Near North (Chicago)
County—Cook
Parts:
C.T. 701–720
C.T. 801–807
C.T. 809–819
C.T. 2001–2006
C.T. 2101–2109
C.T. 2201–2229
C.T. 2301–2318
C.T. 2401–2436
Medicaid Elig—Near South (Chicago)
County—Cook
Parts:
C.T. 3201–3206
C.T. 3301–3305
C.T. 3401–3406
C.T. 3501–3515
C.T. 3601–3605
C.T. 3701–3704
C.T. 3801–3806
C.T. 3806–3820
C.T. 3901–3907
C.T. 4001–4008
Medicaid Elig—Northern Chicago
County—Cook
Parts:
C.T. 101–109
C.T. 201–209
C.T. 301–321
C.T. 401–410
C.T. 501–515
C.T. 601–634
C.T. 1101–1105
C.T. 1301–1305
C.T. 1401–1408

DENTAL: Illinois
Population Group Listing

Population Group

C.T. 1501–1512
C.T. 1601–1607
C.T. 1607–1613
C.T. 1701–1711
C.T. 1801–1803
C.T. 1901–1914
Medicaid Elig—Perry Co
County—Perry
Parts:
Medicaid Elig
Medicaid Elig—Pulaski Co
County—Pulaski
Parts:
Medicaid Eligible
Medicaid Elig—Randolph Co
County—Randolph
Parts:
Medicaid Eligible
Medicaid Elig—Shelby Co
County—Shelby
Parts:
Medicaid Eligible
Medicaid Elig—Southeast South (Chicago
County—Cook
Parts:
C.T. 4401–4409
C.T. 4501–4503
C.T. 4701
C.T. 4801–4805
C.T. 5101–5105
C.T. 5201–5206
C.T. 5501–5502
Medicaid Elig—Southeast North (Chicago
County—Cook
Parts:
C.T. 4101–4114
C.T. 4201–4212
C.T. 4301–4314
C.T. 4601–4610
C.T. 6901–6915
Medicaid Elig—Southwest East (Chicago)
County—Cook
Parts:
C.T. 4901–4914
C.T. 5001–5003
C.T. 5301–5306
C.T. 5401
Medicaid Elig—Union Co
County—Union
Parts:
Medicaid Eligible
Medicaid Elig—Wabash Co
County—Wabash
Parts:
Medicaid Eligible
Medicaid Elig—Washington Co
County—Washington
Parts:
Medicaid Elig Pop
Medicaid Elig—Wayne Co
County—Wayne
Parts:
Medicaid Elig. Pop
Medicaid Elig—West Side (Chicago)
County—Cook
Parts:
C.T. 2501–2524
C.T. 2601–2610
C.T. 2701–2719
C.T. 2801–2843
C.T. 2901–2927
Medicaid Elig—Williamson Co

DENTAL: Illinois
Population Group Listing

Population Group

County—Williamson
Parts:
Medicaid Elig Pop
Medicaid Eligible—Jackson Co
County—Jackson
Parts:
Medicaid Eligible
Medicaid Eligible—Pope Co
County—Pope
Parts:
Medicaid Eligible
Medicaid Eligible—St Clair Co
County—St Clair
Parts:
Medicaid Eligible
Mediciad Elig—Dewitt Co
County—De Witt
Parts:
Medicaid Eligible

DENTAL: Illinois
Facility Listing

Facility Name

Cook Co Dept Of Corr Comp
County—Cook
FCI Greenville
County—Bond
Milestone Dental Clinic
County—Winnebago
Pekin Corr Inst
County—Tazewell
USP Marion
County—Williamson

DENTAL: Indiana
County Listing

County Name

Allen
Population Group: Low Inc—Central Ft Wayne City
Elkhart
Population Group: Low Inc—NW Elkhart Co
*La Porte
Population Group: Low Inc—LA Porte Co
Marion
Service Area: Highland-Brookside (Indianapolis)
Service Area: Near North Side (Indianapolis)
Service Area: South Central Indianapolis
St Joseph
Population Group: Low Inc—South Bend
Tippecanoe
Population Group: Low Inc—Lafayette City
Vigo
Facility: Terre Haute Corr Inst

DENTAL: Indiana
Service Area Listing

Service Area Name

Highland-Brookside (Indianapolis)
County—Marion
Parts:
C.T. 3526–3527
C.T. 3544–3545
C.T. 3547–3551
Near North Side (Indianapolis)
County—Marion

DENTAL: Indiana
Service Area Listing

Service Area Name

Parts:
C.T. 3517
C.T. 3519
C.T. 3521
C.T. 3528
C.T. 3531–3532
South Central Indianapolis
County—Marion
Parts:
C.T. 3556–3557
C.T. 3559
C.T. 3562
C.T. 3569–3572
C.T. 3578–3580

DENTAL: Indiana
Population Group Listing

Population Group

Low Inc—Central Ft Wayne City 1
County—Allen
Parts:
C.T. 6
C.T. 9–27
C.T. 28.97–28.98
C.T. 29–30
Low Inc—Lafayette City
County—Tippecanoe
Parts:
C.T. 4
C.T. 6
C.T. 53–55
C.T. 103–105
Low Inc—LA Porte Co
County—La Porte
Parts:
Low Income
Low Inc—NW Elkhart Co
County—Elkhart
Parts:
C.T. 16–17
C.T. 18.97
C.T. 21
C.T. 22.97–22.98
C.T. 23–28
Low Inc—South Bend
County—St Joseph
Parts:
C.T. 1–2
C.T. 4–7
C.T. 9–10
C.T. 17–24
C.T. 27–30
C.T. 33–35

DENTAL: Indiana
Facility Listing

Facility Name

Terre Haute Corr Inst 1
County—Vigo

DENTAL: Iowa
County Listing

County Name

*Adair
Population Group: Low Inc—Adair Co
*Adams
Population Group: Low Inc—Adams Co
*Allamakee
Population Group: Low Inc—Allamakee Co

DENTAL: Iowa
County Listing

County Name

*Appanoose
Population Group: Low Inc—Appanoose Co
*Benton
Population Group: Low Inc—Benton Co
*Boone
Population Group: Low Income—Boone County
*Buchanan
Population Group: Low Income—Buchanan Co
*Buena Vista
Population Group: Low Income—Buena Vista Co
*Butler
Population Group: Low Inc—Butler Co
*Calhoun
Population Group: Low Inc—Calhoun Co
*Cass
Population Group: Low Income—Cass Co
*Cedar
Population Group: Low Inc—Cedar Co
*Cherokee
Population Group: Low Income—Cherokee Co
*Clarke
Population Group: Low Inc—Clarke Co
*Clay
Population Group: Low Inc—Clay Co
*Clayton
Population Group: Low Income—Clayton Co
*Clinton
Population Group: Low Income—Clinton Co
*Crawford
Population Group: Low Inc—Crawford Co
*Davis
Population Group: Low Income—Davis Co
*Decatur
Population Group: Low Inc—Decatur Co
*Delaware
Population Group: Low Income—Delaware Co
*Des Moines
Population Group: Low Income—Des Moines Co
*Emmet
Population Group: Low Income—Emmett Co
*Fayette
Population Group: Low Income—Fayette Co
*Franklin
Population Group: Low Inc—Franklin Co
*Greene
Population Group: Low Inc—Greene Co
*Guthrie
*Hamilton
Population Group: Low Income—Hamilton Co
*Hardin
Population Group: Low Income—Hardin Co
*Harrison
Population Group: Low Income—Harrison Co
*Henry
Population Group: Low Income—Henry Co
*Howard
Population Group: Low Inc—Howard Co
*Humboldt

DENTAL: Iowa
County Listing

County Name

Population Group: Low Income—Humboldt Co
*Ida
Population Group: Low Income—Ida Co
*Jackson
Population Group: Low Income—Jackson Co
*Jefferson
Population Group: Low Income—Jefferson Co
*Jones
Population Group: Low Income—Jones Co
*Keokuk
Population Group: Low Income—Keokuk Co
*Kossuth
Population Group: Low Income—Kossuth Co
*Lee
Population Group: Low Income—Lee Co
*Louisa
Population Group: Low Inc—Louisa Co
*Lyon
Population Group: Low Income—Lyon Co
*Madison
Population Group: Low Income—Madison Co
*Mahaska
Population Group: Low Income—Mahaska Co
*Mills
Population Group: Low Income—Mills Co
*Monona
Population Group: Low Income—Monona Co
*Montgomery
Population Group: Low Income—Montgomery Co
*O Brien
Population Group: Low Income—O Brien Co
*Osceola
Population Group: Low Income—Osceola Co
*Page
Population Group: Low Income—Page Co
*Palo Alto
Population Group: Low Income—Palo Alto Co
*Plymouth
Population Group: Low Income—Plymouth Co
*Pocahontas
Population Group: Low Income—Pocahontas Co
Polk
Population Group: Low Inc—City Of Des Moines
Pottawattamie
Population Group: Low Inc—Pottawattamie Co
*Poweshiek
Population Group: Low Income—Poweshiek Co
*Ringgold
Population Group: Low Income—Ringgold Co
*Sac
Population Group: Low Inc—Sac Co
Scott
Population Group: Low Income—Scott Co
*Shelby

DENTAL: Iowa
County Listing

County Name

Population Group: Low Inc—Shelby Co
*Sioux
Population Group: Low Income—Sioux Co
*Tama
Population Group: Low Income—Tama Co
*Taylor
Population Group: Low Income—Taylor Co
*Union
Population Group: Low Income—Union Co
*Van Buren
Population Group: Low Income—Van Buren Co
*Wapello
Population Group: Low Income—Wapello Co
*Washington
Population Group: Low Inc—Washington Co
*Webster
Population Group: Low Income—Webster Co
*Winnebago
Population Group: Low Income—Winnebago Co
*Winneshiek
Population Group: Low Income—Winneshiek Co
Woodbury
Population Group: Low Income—Woodbury Co
*Worth
Population Group: Low Income—Worth Co
*Wright
Population Group: Low Income—Wright Co

DENTAL: Iowa
Population Group Listing

Population Group

Low Inc—Adair Co
County—Adair
Parts:
Low Income
Low Inc—Adams Co
County—Adams
Parts:
Low Income
Low Inc—Allamakee Co
County—Allamakee
Parts:
Low Income
Low Inc—Appanoose Co
County—Appanoose
Parts:
Low Income
Low Inc—Benton Co
County—Benton
Parts:
Low Income
Low Inc—Butler Co
County—Butler
Parts:
Low Income
Low Inc—Calhoun Co
County—Calhoun
Parts:
Low Income
Low Inc—Cedar Co
County—Cedar
Parts:
Low Income
Low Inc—City Of Des Moines

DENTAL: Iowa
Population Group Listing

Population Group

County—Polk
Parts:
C.T. 11–12
C.T. 17–18
C.T. 21
C.T. 26–27
C.T. 42
C.T. 44
C.T. 48–53
Low Inc—Clarke Co
County—Clarke
Parts:
Low Income
Low Inc—Clay Co
County—Clay
Parts:
Low Income
Low Inc—Crawford Co
County—Crawford
Parts:
Low Income
Low Inc—Decatur Co
County—Decatur
Parts:
Low Income
Low Inc—Franklin Co
County—Franklin
Parts:
Low Income
Low Inc—Greene Co
County—Greene
Parts:
Low Income
Low Inc—Howard Co
County—Howard
Parts:
Low Income
Low Inc—Louisa Co
County—Louisa
Parts:
Low Income
Low Inc—Pottawattamie Co
County—Pottawattamie
Parts:
Low Income
Low Inc—Sac Co
County—Sac
Parts:
Low Income
Low Inc—Shelby Co
County—Shelby
Parts:
Low Income
Low Inc—Washington Co
County—Washington
Parts:
Low Income
Low Income —Winneshiek Co
County—Winneshiek
Parts:
Low Income
Low Income—Poweshiek Co
County—Poweshiek
Parts:
Low Income
Low Income—Boone County
County—Boone
Parts:
Low Income
Low Income—Buchanan Co
County—Buchanan
Parts:

DENTAL: Iowa
Population Group Listing

Population Group

Low Income
Low Income—Buena Vista Co
County—Buena Vista
Parts:
Low Income
Low Income—Cass Co
County—Cass
Parts:
Low Income
Low Income—Cherokee Co
County—Cherokee
Parts:
Low Income
Low Income—Clayton Co
County—Clayton
Parts:
Low Income
Low Income—Clinton Co
County—Clinton
Parts:
Low Income
Low Income—Davis Co
County—Davis
Parts:
Low Income
Low Income—Delaware Co
County—Delaware
Parts:
Low Income
Low Income—Des Moines Co
County—Des Moines
Parts:
Low Income
Low Income—Emmett Co
County—Emmet
Parts:
Low Income
Low Income—Fayette Co
County—Fayette
Parts:
Low Income
Low Income—Hamilton Co
County—Hamilton
Parts:
Low Income
Low Income—Hardin Co
County—Hardin
Parts:
Low Income
Low Income—Harrison Co
County—Harrison
Parts:
Low Income
Low Income—Henry Co
County—Henry
Parts:
Low Income
Low Income—Humboldt Co
County—Humboldt
Parts:
Low Income
Low Income—Ida Co
County—Ida
Parts:
Low Income
Low Income—Jackson Co
County—Jackson
Parts:
Low Income
Low Income—Jefferson Co
County—Jefferson
Parts:

DENTAL: Iowa
Population Group Listing

Population Group

Low Income
Low Income—Jones Co
County—Jones
Parts:
Low Income
Low Income—Keokuk Co
County—Keokuk
Parts:
Low Income
Low Income—Kossuth Co
County—Kossuth
Parts:
Low Income
Low Income—Lee Co
County—Lee
Parts:
Low Income
Low Income—Lyon Co
County—Lyon
Parts:
Low Income
Low Income—Madison Co
County—Madison
Parts:
Low Income
Low Income—Mahaska Co
County—Mahaska
Parts:
Low Income
Low Income—Mills Co
County—Mills
Parts:
Low Income
Low Income—Monona Co
County—Monona
Parts:
Low Income
Low Income—Montgomery Co
County—Montgomery
Parts:
Low Income
Low Income—O Brien Co
County—O Brien
Parts:
Low Income
Low Income—Osceola Co
County—Osceola
Parts:
Low Income
Low Income—Page Co
County—Page
Parts:
Low Income
Low Income—Palo Alto Co
County—Palo Alto
Parts:
Low Income
Low Income—Plymouth Co
County—Plymouth
Parts:
Low Income
Low Income—Pocahontas Co
County—Pocahontas
Parts:
Low Income
Low Income—Ringgold Co
County—Ringgold
Parts:
Low Income
Low Income—Scott Co
County—Scott
Parts:

DENTAL: Iowa
Population Group Listing

Population Group

Low Income
Low Income—Sioux Co
County—Sioux
Parts:
Low Income
Low Income—Tama Co
County—Tama
Parts:
Low Income
Low Income—Taylor Co
County—Taylor
Parts:
Low Income
Low Income—Union Co
County—Union
Parts:
Low Income
Low Income—Van Buren Co
County—Van Buren
Parts:
Low Income
Low Income—Wapello Co
County—Wapello
Parts:
Low Income
Low Income—Webster Co
County—Webster
Parts:
Low Income
Low Income—Winnebago Co
County—Winnebago
Parts:
Low Income
Low Income—Woodbury Co
County—Woodbury
Parts:
Low Income
Low Income—Worth Co
County—Worth
Parts:
Low Income
Low Income—Wright Co
County—Wright
Parts:
Low Income

DENTAL: Kansas
County Listing

County Name

*Comanche
*Crawford
Population Group: Low Income—Crawford Co
Douglas
Population Group: Low Inc—Douglas Co
*Elk
*Ellis
Population Group: Low Inc—Ellis Co
*Finney
Population Group: Low Inc—Finney Co
*Gove
*Haskell
*Hodgeman
*Kiowa
*Lane
Leavenworth
Facility: USP Leavenworth
*Lyon
Population Group: Low Inc—Emporia City
*Ness
*Rawlins

DENTAL: Kansas
County Listing

County Name

*Saline
Population Group: Low Inc—Saline Co
*Scott
Shawnee
Population Group: Low Inc—City Of Topeka
*Trego
*Wabaunsee
*Wallace
*Wichita
*Wilson

DENTAL: Kansas
Population Group Listing

Population Group

Low Inc—City Of Topeka
County—Shawnee
Parts:
Topeka City
Low Inc—Douglas Co
County—Douglas
Parts:
Low Income
Low Inc—Ellis Co
County—Ellis
Parts:
Low Income
Low Inc—Emporia City
County—Lyon
Parts:
Low-Income
Low Inc—Finney Co
County—Finney
Parts:
Low Income
Low Inc—Saline Co
County—Saline
Parts:
Low Income
Low Income—Crawford Co
County—Crawford
Parts:
Low Income

DENTAL: Kansas
Facility Listing

Facility Name

USP Leavenworth
County—Leavenworth

DENTAL: Kentucky
County Listing

County Name

*Clay
Facility: FCI Manchester
*Edmonson
*Harlan
Population Group: Low Inc—Harlan
*Hart
*Jackson
Jefferson
Population Group: Low Inc—Jefferson
*Larue
*Laurel
*Lee
Population Group: Low Income—Lee Co
*McCreary
*Meade
*Owsley

DENTAL: Kentucky
County Listing

County Name

*Todd
*Wolfe

DENTAL: Kentucky
Population Group Listing

Population Group

Low Inc—Harlan
County—Harlan
Parts:
Low Income
Low Inc—Jefferson
County—Jefferson
Parts:
Low Income
Low Income—Lee Co
County—Lee
Parts:
Low Income

DENTAL: Kentucky
Facility Listing

Facility Name

FCI Manchester
County—Clay

DENTAL: Louisiana
Parish Listing

Parish Name

*Allen
Facility: FCI Oakdale
Caddo
Service Area: Martin Luther King Drive
Service Area: Vivian/Gilliam
*Caldwell
*Catahoula
*De Soto
East Baton Rouge
Service Area: Eden Park/South Baton Rouge
*Natchitoches
Orleans
Population Group: Downtown New Orleans Homless Pop
*Red River
St Landry
*St Mary
*Tangipahoa
*Tensas
*Union
*Vernon
*West Carroll
*Winn

DENTAL: Louisiana
Service Area Listing

Service Area Name

Eden Park/South Baton Rouge
Parish—East Baton Rouge
Parts:
C.T. 8–10
C.T. 12–16
C.T. 21–22
C.T. 24–25
Martin Luther King Drive
Parish—Caddo
Parts:
C.T. 246
Vivian/Gilliam

DENTAL: Louisiana
Service Area Listing

Service Area Name

Parish—Caddo
Parts:
C.T. 248–250
C.T. 251.98

DENTAL: Louisiana
Population Group Listing

Population Group

Downtown New Orleans Homless Pop
Parish—Orleans
Parts:
C.T. 57–59
C.T. 67–68

DENTAL: Louisiana
Facility Listing

Facility Name

FCI Oakdale 1
Parish—Allen

DENTAL: Maine
County Listing

County Name

Androscoggin
Service Area: Jay-Livermore
*Aroostook
Service Area: Allagash
Service Area: Danforth
Service Area: Fort Kent
Population Group: Low Income—Presque Isle
Cumberland
Population Group: Low Inc—Portland
*Franklin
Service Area: Jay-Livermore
Service Area: Rangeley/Kingsfield
Population Group: Low Inc—Farmington Dcaa
*Hancock
Population Group: Low Inc—Bucksport
Population Group: Low Inc—Gouldsboro
Population Group: Low Inc—Ellsworth
*Kennebec
Service Area: Jay-Livermore
Population Group: Low Inc—Waterville Dcaa
Population Group: Low Inc—Farmington Dcaa
Facility: Augusta Mental Health Institute
*Knox
Service Area: Penobscot Bay
*Oxford
Service Area: Jay-Livermore
Service Area: Rangeley/Kingsfield
Penobscot
Service Area: Danforth
Population Group: Penobscot Ind Reserv (S)
Facility: Bangor Mental Health Institute
*Piscataquis
Service Area: Bingham Dcaa
Population Group: Low Inc—Skowhegan Dcaa
*Somerset
Service Area: Bingham Dcaa
Service Area: Jackman Dcaa
Service Area: Rangeley/Kingsfield
Population Group: Low Inc—Skowhegan Dcaa

DENTAL: Maine
County Listing

County Name

Population Group: Low Inc—Waterville Dcaa
Waldo
Population Group: Low Inc—Waterville Dcaa
Population Group: Low Inc—Bucksport
Population Group: Low Inc—Belfast Dcaa
*Washington
Service Area: Danforth
Service Area: Eastport/Lubec
Population Group: Low Inc—Calais Dcaa
Population Group: Low Inc—Gouldsboro
Population Group: Low-Income Machias/Jonesport (Dcaa #37)

DENTAL: Maine
Service Area Listing

Service Area Name

Allagash
County—Aroostook
Parts:
Allagash Town
Northwest Aroostook Unorg.
St. Francis Town
St. John Plantation
Bingham Dcaa
County—Piscataquis
Parts:
Kingsbury Plantation
County—Somerset
Parts:
Bingham Town
Caratunk Town
Moscow Town
NW Somerset (S. 1/3)
Pleasant Ridge Plantation
The Forks Plantation
West Forks Plantation
Danforth
County—Aroostook
Parts:
Bancroft Town
Orient Town
Weston Town
County—Penobscot
Parts:
Drew Plantation
Kingman Unorg.
Prentiss Plantation
County—Washington
Parts:
Codyville Plantation
Danforth Town
Grand Lake Stream Plantation
North Washington Unorg.
Passamaquoddy Indian Township Re
Talmadge Town
Topsfield Town
Vanceboro Town
Waite Town
Eastport/Lubec
County—Washington
Parts:
Dennysville Town
East Central Washington Unorg.
Eastport City
Lubec Town
Pembroke Town
Perry Town
Whiting Town
Fort Kent

DENTAL: Maine
Service Area Listing

Service Area Name

County—Aroostook
Parts:
Eagle Lake Town
Fort Kent Town
Frenchville Town
Grand Isle Town
Hamlin Town
Madawaska Town
New Canada Town
Square Lake Unorg.
St. Agatha Town
Van Buren Town
Wallagrass Plantation
Winterville Plantation
Jackman Dcaa
County—Somerset
Parts:
Dennistown Plantation
Jackman Town
Moose River Town
Jay-Livermore
County—Androscoggin
Parts:
Livermore Falls Town
Livermore Town
County—Franklin
Parts:
Jay Town
County—Kennebec
Parts:
Fayette Town
County—Oxford
Parts:
Canton Town
Hartford Town
Sumner Town
Penobscot Bay
County—Knox
Parts:
Matinicus Isle Plantation
North Haven Town
Vinalhaven Town
Rangeley/Kingsfield
County—Franklin
Parts:
Carrabassett Valley Town
Coplin Plantation
Dallas Plantation
Eustis Town
Kingsfield Twn
Madrid Town
North Franklin Unorg.
Phillips Town
Rangeley Town
Rangeley Plantation
Sandy River Plantation
Unorg. Terr.—E.C.Franklin
Wyman Unorg.
County—Oxford
Parts:
Lincoln Plantation
Magalloway Plantation
Unorg. Terr.-N.Oxford
County—Somerset
Parts:
Northwest Somerset Unorg.

DENTAL: Maine
Population Group Listing

Population Group

Low Inc—Belfast Dcaa

DENTAL: Maine
Population Group Listing

Population Group

County—Waldo
Parts:
Belfast City
Belmont Town
Brooks Town
Jackson Town
Knox Town
Liberty Town
Monroe Town
Montville Town
Morrill Town
Northport Town
Searsmont Town
Searsport Town
Stockton Springs Town
Swanville Town
Waldo Town
Low Inc—Bucksport
County—Hancock
Parts:
Bucksport Town
Orland Town
Verona Town
County—Waldo
Parts:
Frankfort Town
Prospect Town
Low Inc—Calais Dcaa
County—Washington
Parts:
Alexander Town
Baileyville Town
Baring Town
Calais City
Charlotte Town
Cooper Town
Crawford Town
Meddybemps Town
Princeton Town
Robbinston Town
Low Inc—Ellsworth
County—Hancock
Parts:
Eastbrook Town
Ellsworth City
Franklin Town
Hancock Town
Lamoine Town
Mariaville Town
Osborn Town
Otis Town
Trenton Town
Waltham Town
Low Inc—Farmington Dcaa
County—Franklin
Parts:
Avon Town
Chesterville Town
Farmington Town
Industry Town
New Sharon Town
New Vineyard Town
So.Franklin Unorganized
Strong Town
Temple Town
Wilton Town
County—Kennebec
Parts:
Vienna Town
Low Inc—Gouldsboro
County—Hancock
Parts:

DENTAL: Maine
Population Group Listing

Population Group

East Hancock Unorg.
Gouldsboro Town
Sorrento Town
Sullivan Town
Winter Harbor Town
County—Washington
Parts:
Beddington Town
Cherryfield Town
Columbia Town
Deblois Town
Harrington Town
Milbridge Town
Steuben Town
Low Inc—Portland
County—Cumberland
Parts:
Low Income
Low Inc—Skowhegan Dcaa
County—Piscataquis
Parts:
Wellington Town
County—Somerset
Parts:
Anson Town
Athens Town
Brighton Plantation Town
Canaan Town
Central Somerset Unorg.
Cornville Town
Embden Town
Harmony Town
Highland Plantation Town
Madison Town
Mercer Town
New Portland Town
Norridgewock Town
Skowhegan Town
Smithfield Town
Solon Town
Starks Town
Low Inc—Waterville Dcaa
County—Kennebec
Parts:
Albion Town
Belgrade Town
Benton Town
China Town
Clinton Town
Oakland Town
Rome Town
Sidney Town
Unity Township
Vassalboro Town
Waterville Town
Winslow Town
County—Somerset
Parts:
Fairfield Town
County—Waldo
Parts:
Burnham Town
Freedom Town
Palermo Town
Thorndike Town
Troy Town
Unity Town
Low Income—Presque Isle
County—Aroostook
Parts:
Ashland Town
Blaine Town

DENTAL: Maine
Population Group Listing

Population Group

Bridgewater Town
Caribou City
Castle Hill Town
Caswell Town
Central Aroostook Unorg.
Chapman Town
Connor Unorg.
Cyr Plantation
East Plantation
Easton Town
Fort Fairfield Town
Garfield Plantation
Limestone Town
Mapleton Town
Mars Hill Town
Masardis Town
Nashville Plantation
New Sweeden Town
Oxbow Plantation
Perham Town
Portage Lake Town
Presque Isle City
Stockholm Town
Wade Town
Washburn Town
Westfield Town
Westmanland Town
Woodland Town
Low-Income Machias/Jonesport (Dcaa #37)
County—Washington
Parts:
Addison Twn
Beals Twn
Centerville Twn
Columbia Falls Twn
Cutler Twn
East Machias Twn
Jonesboro Twn
Jonesport Twn
Machias Twn
Machiasport Twn
Marshfield Twn
Northfield Twn
Roque Bluffs Twn
Wesley Twn
Whitneyville Twn
1/3 Ec Washington Unorg.
Penobscot Ind Reserv (S)
County—Penobscot
Parts:
Old Town City

DENTAL: Maine
Facility Listing

Facility Name

Augusta Mental Health Institute
County—Kennebec
Bangor Mental Health Institute
County—Penobscot

DENTAL: Maryland
County Listing

County Name

Allegany
Population Group: Low Inc—Allegany Co
Facility: FCI Cumberland
Baltimore City
Population Group: Low Inc—South Baltimore
Population Group: Low Inc—N Central Baltimore

DENTAL: Maryland
County Listing

County Name

Population Group: Low Inc—East Baltimore
Population Group: Low Inc—Sandtown Winchester
Facility: Health Care For The Homeless Facility
*Caroline
Population Group: Low Inc—Caroline
Charles
Population Group: Low Inc—Nanjemoy-Marbury
*Garrett
Population Group: Low Inc—Garrett Co
*Somerset
Population Group: Low Inc—Lower Eastern Shore
*Wicomico
Population Group: Low Inc—Lower Eastern Shore
*Worcester
Population Group: Low Inc—Lower Eastern Shore

DENTAL: Maryland
Population Group Listing

Population Group

Low Inc—Allegany Co
County—Allegany
Parts:
Low Income
Low Inc—Caroline
County—Caroline
Parts:
Low Inc Pop Caroline
Low Inc—East Baltimore
County—Baltimore City
Parts:
C.T. 301–302
C.T. 501
C.T. 603–605
C.T. 703–704
C.T. 802
C.T. 803.01–803.02
C.T. 804
C.T. 806–808
C.T. 909
C.T. 1001–1002
C.T. 1004
C.T. 1205
Low Inc—Garrett Co
County—Garrett
Parts:
Low Income
Low Inc—Lower Eastern Shore
County—Somerset
Parts:
Low Income
County—Wicomico
Parts:
Low Income
County—Worcester
Parts:
Low Income
Low Inc—N Central Baltimore
County—Baltimore City
Parts:
C.T. 901–908
C.T. 1201–1204
C.T. 2709.03
C.T. 2710.01–2710.02
C.T. 2711.01–2711.02

DENTAL: Maryland
Population Group Listing

Population Group

Low Inc—Nanjemoy–Marbury
County—Charles
Parts:
District 3, Nanjemoy
District 10, Marbury
Low Inc—Sandtown Winchester
County—Baltimore City
Parts:
C.T. 1401–1403
C.T. 1501–1502
C.T. 1601–1604
C.T. 1607
C.T. 1702–1703
Low Inc—South Baltimore
County—Baltimore City
Parts:
C.T. 2101.01
C.T. 2102.01
C.T. 2301–2303
C.T. 2401
C.T. 2404
C.T. 2502.03–2502.05
C.T. 2502.07
C.T. 2503.02–2503.03
C.T. 2504.01–2504.02
C.T. 2505–2506

DENTAL: Maryland
Facility Listing

Facility Name

FCI Cumberland 1
County—Allegany
Health Care For The Homeless Facility
County—Baltimore City

DENTAL: Massachusetts
County Listing

County Name

Barnstable
Population Group: Low Inc—Mid-Cape
Bristol
Population Group: Low Inc—Fall River
Population Group: Low Inc—New Bedford
Hampden
Service Area: Worthington
Population Group: Low Inc—C Springfield
Hampshire
Service Area: Worthington
Suffolk
Service Area: North Dorchester
Population Group: Low Inc—Mattapan
Population Group: Low Inc—Roxbury
Population Group: Low Inc—South End
Population Group: Low Inc—Allston-Brighton
Worcester
Population Group: Low Inc—Worcester

DENTAL: Massachusetts
Service Area Listing

Service Area Name

North Dorchester
County—Suffolk
Parts:
C.T. 901–924
Worthington
County—Hampden
Parts:
Chester Town

DENTAL: Massachusetts
Service Area Listing

Service Area Name

County—Hampshire
Parts:
Chesterfield Town
Cummington Town
Goshen Town
Middlefield Town
Plainfield Town
Worthington Town

DENTAL: Massachusetts
Population Group Listing

Population Group

Low Inc—Allston-Brighton
County—Suffolk
Parts:
C.T. 1
C.T. 4.01
C.T. 5.01–5.02
C.T. 6.02
C.T. 7.01–7.02
C.T. 8.01–8.02
Low Inc—C Springfield
County—Hampden
Parts:
C.T. 8005–8010
C.T. 8011.01–8011.02
C.T. 8012–8013
C.T. 8014.01–8014.02
C.T. 8015.01–8015.02
C.T. 8017–8020
Low Inc—Fall River
County—Bristol
Parts:
Fall River City
Low Inc—Mattapan
County—Suffolk
Parts:
C.T. 1010.01–1010.02
C.T. 1011.01–1011.02
Low Inc—Mid-Cape
County—Barnstable
Parts:
Barnstable Township
Dennis Township
Harwich Township
Yarmouth Township
Low Inc—New Bedford
County—Bristol
Parts:
New Bedford Twp
Low Inc—Roxbury
County—Suffolk
Parts:
C.T. 801–809
C.T. 811–821
Low Inc—South End
County—Suffolk
Parts:
C.T. 704–712
Low Inc—Worcester
County—Worcester
Parts:
C.T. 7302–7303
C.T. 7304.01–7304.02
C.T. 7305–7307
C.T. 7308.01–7308.02
C.T. 7309.01–7309.02
C.T. 7310
C.T. 7311.01–7311.02
C.T. 7312.01–7312.02
C.T. 7313–7319

DENTAL: Massachusetts
Population Group Listing

Population Group

C.T. 7320.01–7320.02
C.T. 7321
C.T. 7322.01–7322.03
C.T. 7323–7328
C.T. 7329.01–7329.02
C.T. 7330
C.T. 7331.01
C.T. 7331.01–7331.02

DENTAL: Michigan
County Listing

County Name

*Alcona
Population Group: Low Inc—Alcona Co
*Alger
Population Group: Low Inc—Alger Co
*Alpena
Population Group: Low Inc—Alpena Co
*Antrim
Population Group: Low Inc—Antrim Co
*Arenac
Population Group: Low Inc—Arenac Co
*Baraga
Population Group: Low Inc—Baraga Co
*Benzie
Population Group: Low Inc—Benzie Co
Berrien
Population Group: Low Inc—Berrien Co
*Branch
Population Group: Low Inc—Branch Co
Calhoun
Population Group: Low Inc—Calhoun Co
*Cass
Population Group: Low Inc—Cass Co
*Cheboygan
Population Group: Low Inc—Cheboygan Co
*Chippewa
Population Group: Low Inc—Chippewa Co
*Clare
Population Group: Low Inc—Clare Co
*Crawford
Population Group: Low Inc—Crawford Co
*Delta
Population Group: Low Inc—Delta Co
*Dickinson
Population Group: Low Inc—Dickenson Co
*Emmet
Population Group: Low Inc—Emmet Co
Genesee
Population Group: Low Inc—South Flint
Population Group: Low Inc—North Flint
*Gladwin
Population Group: Low Inc—Gladwin Co
*Gogebic
Population Group: Low Inc—Gogebic Co
*Gratiot
Population Group: Low Inc/MFW—Gratiot Co
*Houghton
Population Group: Low Inc—Houghton Co
*Huron
Population Group: Low Inc—Huron Co
*Ionia
Population Group: Low Inc—Ionia Co
*Iosco
Population Group: Low Inc—Iosco Co
*Iron
Population Group: Low Inc—Iron Co
*Isabella
Population Group: Low Inc—Isabella Co

DENTAL: Michigan
County Listing

County Name

Jackson
Population Group: Low Inc—Jackson Co
Kalamazoo
Population Group: Low Inc—Northern Kalamazoo City
Facility: Kalamazoo Co Dental Office
*Kalkaska
Population Group: Low Inc—Kalkaska Co
Kent
Population Group: Low Inc—Grand Rapids
*Keweenaw
Population Group: Low Inc—Keweenaw Co
*Lake
Population Group: Low Inc—Lake Co
*Lenawee
Population Group: Low Inc—W Lenawee
*Luce
Population Group: Low Inc—Luce Co
*Mackinac
Population Group: Low Inc—Mackinac Co
*Manistee
Population Group: Low Inc—Manistee Co
*Marquette
Population Group: Low Inc—Marquette Co
*Mason
Population Group: Low Inc—Mason Co
*Mecosta
Population Group: Low Inc—Mecosta Co
*Menominee
Population Group: Low Inc—Menominee Co
*Missaukee
Population Group: Low Inc—Missaukee Co
Monroe
Population Group: Low Inc—East Central Monroe
*Montcalm
Population Group: Low Inc/MFW—Montcalm Co
*Montmorency
Population Group: Low Inc—Montmorency Co
Muskegon
Population Group: Low Inc—Muskegon Co
*Newaygo
Population Group: Low Inc—Newaygo Co
*Oceana
Population Group: Low Inc—Oceana Co
*Ogemaw
Population Group: Low Inc—Ogemaw Co
*Ontonagon
Population Group: Low Inc—Ontonagon Co
*Osceola
Population Group: Low Inc—Osceola Co
*Oscoda
Population Group: Low Inc—Oscoda Co
*Otsego
Population Group: Low Inc—Otsego Co
*Presque Isle
Population Group: Low Inc—Presque Isle Co
*Roscommon
Population Group: Low Inc—Roscommon Co
Saginaw
Population Group: Low Inc—Eastside Saginaw
*Sanilac
Population Group: Low Inc—Sanilac Co
*Schoolcraft

DENTAL: Michigan
County Listing

County Name

Population Group: Low Inc—Schoolcraft Co
*Tuscola
Population Group: Low Inc—Tuscola Co
Van Buren
Population Group: Low Inc—Van Buren Co
Wayne
Population Group: Low Inc—Tireman/Chadsey
Population Group: Low Inc—Highland Park City
Population Group: Low Inc—Southwest Detroit
Population Group: Low Inc—Romulus City
Population Group: Low Inc—River Rouge City
Population Group: Low Inc—Melvindale City
Population Group: Low Inc—Inkster City
Population Group: Low Inc—Ecorse City
Population Group: Low Inc—Eastside Detroit
Population Group: Low Inc—Mackenzie/Brooks
Population Group: Low Inc—Chene
Population Group: Low Inc—Airport/Conner
Population Group: Low Inc—Nolan/State Fair/Davison/Persh
Population Group: Low Inc—Outer Drive/Van Dyke
*Wexford
Population Group: Low Inc—Wexford Co

DENTAL: Michigan
Population Group Listing

Population Group

Low Inc—Airport/Conner
County—Wayne
Parts:
C.T. 5037
C.T. 5039–5048
C.T. 5052–5053
C.T. 5107–5109
Low Inc—Alcona Co
County—Alcona
Parts:
Low Income
Low Inc—Alger Co
County—Alger
Parts:
Low Income
Low Inc—Alpena Co
County—Alpena
Parts:
Low Income
Low Inc—Antrim Co
County—Antrim
Parts:
Low Income
Low Inc—Arenac Co
County—Arenac
Parts:
Low Income
Low Inc—Baraga Co
County—Baraga
Parts:
Low Income
Low Inc—Benzie Co
County—Benzie
Parts:
Low Income

DENTAL: Michigan
Population Group Listing

Population Group

Low Inc—Berrien Co
County—Berrien
Parts:
Low Income
Low Inc—Branch Co
County—Branch
Parts:
Low Income
Low Inc—Calhoun Co
County—Calhoun
Parts:
Low Income
Low Inc—Cass Co
County—Cass
Parts:
Low Income
Low Inc—Cheboygan Co
County—Cheboygan
Parts:
Low Income
Low Inc—Chene
County—Wayne
Parts:
C.T. 5111
C.T. 5161
C.T. 5177–5178
C.T. 5183–5188
Low Inc—Chippewa Co
County—Chippewa
Parts:
Low Income
Low Inc—Clare Co
County—Clare
Parts:
Low Income
Low Inc—Crawford Co
County—Crawford
Parts:
Low Income
Low Inc—Delta Co
County—Delta
Parts:
Low Income
Low Inc—Dickenson Co
County—Dickinson
Parts:
Low Income
Low Inc—Eastside Detroit
County—Wayne
Parts:
C.T. 5121–5124
C.T. 5126
C.T. 5129
C.T. 5132–5136
C.T. 5139–5143
C.T. 5145–5156
Low Inc—Eastside Saginaw
County—Saginaw
Parts:
C.T. 1–11
C.T. 110
Low Inc—Ecorse City
County—Wayne
Parts:
C.T. 5795
C.T. 5795.99–5796.00
C.T. 5797–5798
Low Inc—Emmet Co
County—Emmet
Parts:
Low Income
Low Inc—Gladwin Co

DENTAL: Michigan
Population Group Listing

Population Group

County—Gladwin
Parts:
Low Income
Low Inc—Gogebic Co
County—Gogebic
Parts:
Low Income
Low Inc—Grand Rapids
County—Kent
Parts:
C.T. 2–5
C.T. 8–10
C.T. 11.01–11.02
C.T. 12–15
C.T. 19–32
C.T. 36–40
Low Inc—Highland Park City
County—Wayne
Parts:
C.T. 5530–5537
Low Inc—Houghton Co
County—Houghton
Parts:
Low Income
Low Inc—Huron Co
County—Huron
Parts:
Low Income
Low Inc—Inkster City
County—Wayne
Parts:
C.T. 5701–5710
Low Inc—Ionia Co
County—Ionia
Parts:
Low Income
Low Inc—Iosco Co
County—Iosco
Parts:
Low Income
Low Inc—Iron Co
County—Iron
Parts:
Low Income
Low Inc—Isabella Co
County—Isabella
Parts:
Low Income
Low Inc—Jackson Co
County—Jackson
Parts:
Low Income
Low Inc—Kalkaska Co
County—Kalkaska
Parts:
Low Income
Low Inc—Keweenaw Co
County—Keweenaw
Parts:
Low Income
Low Inc—Lake Co
County—Lake
Parts:
Low Income
Low Inc—Luce Co
County—Luce
Parts:
Low Income
Low Inc—Mackenzie/Brooks
County—Wayne
Parts:
C.T. 5341–5344

DENTAL: Michigan
Population Group Listing

Population Group

C.T. 5347
C.T. 5350–5357
C.T. 5364–5367
C.T. 5370–5373
C.T. 5377–5378
C.T. 5451–5454
Low Inc—Mackinac Co
County—Mackinac
Parts:
Low Income
Low Inc—Manistee Co
County—Manistee
Parts:
Low Income
Low Inc—Marquette Co
County—Marquette
Parts:
Low Income
Low Inc—Mason Co
County—Mason
Parts:
Low Income
Low Inc—Mecosta Co
County—Mecosta
Parts:
Low Income
Low Inc—Melvindale City
County—Wayne
Parts:
C.T. 5230
C.T. 5986
Low Inc—Menominee Co
County—Menominee
Parts:
Low Income
Low Inc—Missaukee Co
County—Missaukee
Parts:
Low Income
Low Inc—Montmorency Co
County—Montmorency
Parts:
Low Income
Low Inc—Muskegon Co
County—Muskegon
Parts:
Low Income
Low Inc—Newaygo Co
County—Newaygo
Parts:
Low Income
Low Inc—Nolan/State Fair/Davison/Persh
County—Wayne
Parts:
C.T. 5064–5080
C.T. 5102–5106
Low Inc—North Flint
County—Genesee
Parts:
C.T. 1–11
C.T. 14
C.T. 17–27
C.T. 103.02
C.T. 103.04
Low Inc—Northern Kalamazoo City
County—Kalamazoo
Parts:
C.T. 1
C.T. 2.01–2.02
C.T. 3
C.T. 4.02
C.T. 5–6

DENTAL: Michigan
Population Group Listing

Population Group

C.T. 8.01–8.02
C.T. 9–10
Low Inc—Oceana Co
County—Oceana
Parts:
Low Income
Low Inc—Ogemaw Co
County—Ogemaw
Parts:
Low Income
Low Inc—Ontonagon Co
County—Ontonagon
Parts:
Low Income
Low Inc—Osceola Co
County—Osceola
Parts:
Low Income
Low Inc—Oscoda Co
County—Oscoda
Parts:
Low Income
Low Inc—Otsego Co
County—Otsego
Parts:
Low Income
Low Inc—Outer Drive/Van Dyke
County—Wayne
Parts:
C.T. 5035–5036
C.T. 5049–5051
C.T. 5061–5063
Low Inc—Presque Isle Co
County—Presque Isle
Parts:
Low Income
Low Inc—River Rouge City
County—Wayne
Parts:
C.T. 5790–5793
Low Inc—Romulus City
County—Wayne
Parts:
C.T. 5855–5863
Low Inc—Roscommon Co
County—Roscommon
Parts:
Low Income
Low Inc—Sanilac Co
County—Sanilac
Parts:
Low Income
Low Inc—Schoolcraft Co
County—Schoolcraft
Parts:
Low Income
Low Inc—South Flint
County—Genesee
Parts:
C.T. 12–13
C.T. 15
C.T. 28–29
C.T. 32
C.T. 36–40
C.T. 113.01–113.02
Low Inc—Southwest Detroit
County—Wayne
Parts:
C.T. 5208–5209
C.T. 5211–5214
C.T. 5231–5238
C.T. 5240–5243

DENTAL: Michigan
Population Group Listing

Population Group

C.T. 5245
C.T. 5247–5248
Low Inc—Tireman/Chadsey
County—Wayne
Parts:
C.T. 5221–5222
C.T. 5251–5258
C.T. 5260–5265
C.T. 5335–5337
C.T. 5345–5346
Low Inc—Tuscola Co
County—Tuscola
Parts:
Low Income
Low Inc—Van Buren Co
County—Van Buren
Parts:
Low Income
Low Inc—W Lenawee
County—Lenawee
Parts:
Adrian City
Dover Twp
Fairfield Twp
Hudson Twp
Hudson City
Madison Charter Twp
Medina Twp
Morenci City
Rollin Twp
Rome Twp
Seneca Twp
Low Inc—Wexford Co
County—Wexford
Parts:
Low Income
Low Inc–East Central Monroe
County—Monroe
Parts:
Monroe Twp
Monroe City
Low Inc/MFW—Gratiot Co
County—Gratiot
Parts:
Low Income
MFW
Low Inc/MFW—Montcalm Co
County—Montcalm
Parts:
Low Income
MFW

DENTAL: Michigan
Facility Listing

Facility Name

Kalamazoo Co Dental Office
County—Kalamazoo

DENTAL: Minnesota
County Listing

County Name

Anoka
Population Group: Low Inc—Columbia Heights & Hilltop
*Big Stone
Population Group: Low Inc—Big Stone Co
*Chippewa
Population Group: Low Inc—Chippewa Co
Clay
Population Group: Low Inc—Clay Co

DENTAL: Minnesota
County Listing

County Name

*Clearwater
Population Group: Low Inc—Clearwater Co
*Cook
Hennepin
Population Group: Low Inc—NE Minneapolis
Population Group: Low Inc—North Minneapolis
*Kittson
Population Group: Low Inc—Kittson Co
*Koochiching
Service Area: Littlefork/Big Falls
*Lake Of The Woods
Population Group: Low Inc—Lake Of The Woods Co
*Lincoln
Population Group: Low Inc—Lincoln Co
*Mahnomen
Population Group: Low Inc—Mahnomen Co
Olmsted
Facility: Federal Medical Ctr—Rochester
*Pennington
Population Group: Low Inc—Pennington Co
Polk
Population Group: Low Inc—Polk/Red Lake
*Red Lake
Population Group: Low Inc—Polk/Red Lake
*Renville
Population Group: Low Inc—Renville Co
*Roseau
Population Group: Low Inc—Roseau Co
St Louis
Service Area: Cook/Orr
Service Area: Littlefork/Big Falls
*Swift
Population Group: Low Inc—Swift Co
*Traverse
Population Group: Low Inc—Traverse Co
*Yellow Medicine
Population Group: Low Inc—Yellow Medicine Co

DENTAL: Minnesota
Service Area Listing

Service Area Name

Cook/Orr
County—St Louis
Parts:
C.T. 151–152
C.T. 155
Littlefork/Big Falls
County—Koochiching
Parts:
Big Falls City
East Koochiching Unorg.
Littlefork City
Mizpah City
Nett Lake Unorg.
Northome City
Northome Unorg.
Northwest Koochiching Unorg.
South Koochiching Unorg.
County—St Louis
Parts:
Nett Lake Unorg.

DENTAL: Minnesota
Population Group Listing

Population Group
Low Inc—Big Stone Co
County—Big Stone
Parts:
Low Income
Low Inc—Chippewa Co
County—Chippewa
Parts:
Low Income
Low Inc—Clay Co
County—Clay
Parts:
Low Income
Low Inc—Clearwater Co
County—Clearwater
Parts:
Low Income
Low Inc—Columbia Heights & Hilltop
County—Anoka
Parts:
Columbia Heights City
Hilltop City
Low Inc—Kittson Co
County—Kittson
Parts:
Low Income
Low Inc—Lake Of The Woods Co
County—Lake Of The Woods
Parts:
Low Income
Low Inc—Lincoln Co
County—Lincoln
Parts:
Low Income
Low Inc—Mahnomen Co
County—Mahnomen
Parts:
Low Income
Low Inc—North Minneapolis
County—Hennepin
Parts:
C.T. 7–10
C.T. 13–16
C.T. 20–21
C.T. 23
C.T. 27–29
C.T. 32–35
C.T. 41–42
Low Inc—NE Minneapolis
County—Hennepin
Parts:
C.T. 5
C.T. 6.01–6.02
C.T. 11–12
C.T. 17–19
C.T. 24–26
C.T. 30–31
C.T. 36–40
C.T. 49–50
Low Inc—Pennington Co
County—Pennington
Parts:
Low Income
Low Inc—Polk/Red Lake
County—Polk
Parts:
Polk Co
County—Red Lake
Parts:
Red Lake Co
Low Inc—Renville Co
County—Renville
Parts:

DENTAL: Minnesota
Population Group Listing

Population Group
Low Income
Low Inc—Roseau Co
County—Roseau
Parts:
Low Income
Low Inc—Swift Co
County—Swift
Parts:
Low Income
Low Inc—Traverse Co
County—Traverse
Parts:
Low Income
Low Inc—Yellow Medicine Co
County—Yellow Medicine
Parts:
Low Income

DENTAL: Minnesota
Facility Listing

Facility Name
Federal Medical Ctr—Rochester
County—Olmsted

DENTAL: Mississippi
County Listing

County Name
*Amite
*Benton
*Bolivar
*Carroll
*Chickasaw
*Clarke
*Franklin
*Greene
Facility: South Ms Correctional Institution
Hancock
Harrison
Population Group: Low Inc—Harrison Co
Hinds
Population Group: Low Inc—Western Hinds
*Humphreys
*Jefferson
*Kemper
*Lawrence
Madison
Population Group: Low Inc—Madison
*Monroe
Population Group: Low Inc—Monroe Co
*Montgomery
*Noxubee
*Perry
Rankin
Facility: Central Ms Correctional Facility
*Scott
*Sunflower
Facility: Mississippi State Pen.
*Yazoo

DENTAL: Mississippi
Population Group Listing

Population Group
Low Inc—Harrison Co
County—Harrison
Parts:
Low Income
Low Inc—Madison
County—Madison

DENTAL: Mississippi
Population Group Listing

Population Group
Low Inc—Monroe Co
County—Monroe
Parts:
Low Income
Low Inc—Western Hinds
County—Hinds
Parts:
C.T. 106–107
C.T. 112–113

DENTAL: Mississippi
Facility Listing

Facility Name
Central Ms Correctional Facility 2
County—Rankin
Mississippi State Pen.
County—Sunflower
South Ms Correctional Institution
County—Greene

DENTAL: Missouri
County Listing

County Name
*Adair
Population Group: Low Inc—Adair Co
Andrew
Population Group: Low Inc—Andrew Co
*Atchison
Population Group: Low Inc—Atchison Co
*Audrain
Population Group: Low Inc—Audrain Co
*Barry
Population Group: Low Inc—Barry Co
*Barton
Population Group: Low Inc—Barton Co
*Bates
*Benton
Population Group: Low Inc—Benton Co
*Bollinger
Boone
Population Group: Low Inc—Boone Co
Population Group: Low Inc—Boone Co
Buchanan
Population Group: Low Inc—Buchanan Co
*Butler
Population Group: Low Inc—Butler Co
*Caldwell
Population Group: Low Inc—Caldwell Co
*Callaway
Population Group: Low Inc—Callaway Co
*Camden
Population Group: Low Inc—Camden Co
*Cape Girardeau
Population Group: Low Inc—Cape Girardeau Co
*Carter
*Cedar
Population Group: Low Inc—Cedar Co
*Chariton
Christian
Population Group: Low Inc—Christian Co
*Clark
Clinton
Population Group: Low Inc—Clinton Co
*Cooper
Population Group: Low Inc—Cooper Co
*Crawford
Population Group: Low Inc—Crawford Co
*Dade
*Dallas

DENTAL: Missouri
County Listing

County Name

*Daviess
Population Group: Low Inc—Daviess Co
*De Kalb
Population Group: Low Inc—Dekalb Co
*Dent
Population Group: Low Inc—Dent Co
*Douglas
Population Group: Low Inc—Douglas Co
*Dunklin
Population Group: Low Inc—Dunklin Co
Franklin
Population Group: Low Inc—Franklin Co
*Gasconade
Population Group: Low Inc—Gasconade
*Gentry
Population Group: Low Inc—Gentry Co
Greene
Population Group: Low Inc—Greene Co
*Grundy
Population Group: Low Inc—Grundy Co
*Harrison
Population Group: Low Inc—Harrison Co
*Henry
Population Group: Low Inc—Henry Co
*Hickory
*Holt
*Howard
Population Group: Low Inc—Howard Co
*Howell
Population Group: Low Inc—Howell Co
*Iron
Jackson
Population Group: Low Inc—Central Kansas City
Population Group: Low Inc—North Kansas City
Jasper
Population Group: Low Inc—Jasper Co
Jefferson
Population Group: Low Inc—Jefferson Co
*Johnson
Population Group: Low Inc—Johnson Co
*Knox
Population Group: Low Inc—Knox Co
*Laclede
Population Group: Low Inc—Laclede Co
Lafayette
Population Group: Low Inc—Lafayette Co
*Lawrence
Population Group: Low Inc—Lawrence Co
*Lewis
Population Group: Low Inc—Lewis Co
Lincoln
Population Group: Low Inc—Lincoln Co
*Linn
Population Group: Low Inc—Linn Co
*Livingston
Population Group: Low Inc—Livingston Co
*Macon
Population Group: Low Inc—Macon Co
*Madison
Population Group: Low Inc—Madison Co
*Marion
Population Group: Low Inc—Marion Co
*McDonald
Population Group: Low Inc—Mcdonald Co
*Mercer
*Mississippi
Population Group: Low Inc—Mississippi Co
*Montgomery
*New Madrid

DENTAL: Missouri
County Listing

County Name

Population Group: Low Inc—New Madrid Co
Newton
Population Group: Low Inc—Newton Co
*Nodaway
Population Group: Low Inc—Nodaway Co
*Oregon
*Osage
Population Group: Low Inc—Osage Co
*Ozark
*Pemiscot
*Perry
Population Group: Low Inc—Perry Co
*Pettis
Population Group: Low Inc—Pettis Co
*Phelps
Population Group: Low Inc—Phelps Co
*Pike
Population Group: Low Inc—Pike Co
*Polk
Population Group: Low Inc—Polk Co
*Pulaski
Population Group: Low Inc—Pulaski Co
*Putnam
Population Group: Low Inc—Putnam Co
Ray
Population Group: Low Income—Ray Co
*Reynolds
Population Group: Low Inc—Reynolds Co
*Ripley
*Saline
Population Group: Low Inc—Saline Co
*Schuyler
Population Group: Low Inc—Schuyler Co
*Scotland
Population Group: Low Inc—Scotland Co
*Scott
Population Group: Low Inc—Scott Co
*Shelby
Population Group: Low Inc—Shelby Co
*St Clair
Population Group: Low Inc—St Clair Co
*St Francois
Population Group: Low Inc—St Francois Co
St Louis City
Population Group: Low Inc—N. St. Louis
Population Group: Low Inc—W. Central St. Louis
Population Group: Low Inc—Southeast St. Louis
Population Group: Low Inc—E. Central St. Louis
*Ste Genevieve
Population Group: Low Inc—Ste Genevieve
*Stoddard
Population Group: Low Inc—Stoddard Co
*Stone
Population Group: Low Inc—Stone Co
*Sullivan
Population Group: Low Inc—Sullivan Co
*Texas
Population Group: Low Inc—Texas Co
*Vernon
Population Group: Low Inc—Vernon Co
*Washington
*Wayne
Webster
Population Group: Low Inc—Webster Co
*Worth
Population Group: Low Inc—Worth Co

DENTAL: Missouri
County Listing

County Name

*Wright
Population Group: Low Inc—Wright Co

DENTAL: Missouri
Population Group Listing

Population Group

Low Inc—Adair Co
County—Adair
Parts:
Low Income
Low Inc—Andrew Co
County—Andrew
Parts:
Low Income
Low Inc—Atchison Co
County—Atchison
Parts:
Low Income
Low Inc—Audrain Co
County—Audrain
Parts:
Low Income
Low Inc—Barry Co
County—Barry
Parts:
Low Income
Low Inc—Barton Co
County—Barton
Parts:
Low Income
Low Inc—Benton Co
County—Benton
Parts:
Low Income
Low Inc—Boone Co
County—Boone
Parts:
Low Income
Low Inc—Boone Co
County—Boone
Parts:
Low Income
Low Inc—Buchanan Co
County—Buchanan
Parts:
Low Income
Low Inc—Butler Co
County—Butler
Parts:
Low Income
Low Inc—Caldwell Co
County—Caldwell
Parts:
Low Income
Low Inc—Callaway Co
County—Callaway
Parts:
Low Income
Low Inc—Camden Co
County—Camden
Parts:
Low Income
Low Inc—Cape Girardeau Co
County—Cape Girardeau
Parts:
Low Income
Low Inc—Cedar Co
County—Cedar
Parts:
Low Income
Low Inc—Central Kansas City

DENTAL: Missouri
Population Group Listing

Population Group

County—Jackson
Parts:
C.T. 45–57
C.T. 58.01–58.02
C.T. 59.01–59.02
C.T. 60–99
C.T. 100.01–100.02
C.T. 101.03
C.T. 102.01
C.T. 103.01
C.T. 104.01
C.T. 130.01
Low Inc—Christian Co
County—Christian
Parts:
Low Income
Low Inc—Clinton Co
County—Clinton
Parts:
Low Income
Low Inc—Cooper Co
County—Cooper
Parts:
Low Income
Low Inc—Crawford Co
County—Crawford
Parts:
Low Income
Low Inc—Daviess Co
County—Daviess
Parts:
Low Income
Low Inc—Dekalb Co
County—De Kalb
Parts:
Low Income
Low Inc—Dent Co
County—Dent
Parts:
Low Income
Low Inc—Douglas Co
County—Douglas
Parts:
Low Income
Low Inc—Dunklin Co
County—Dunklin
Parts:
Low Income
Low Inc—E. Central St. Louis
County—St Louis City
Parts:
C.T. 1171–1172
C.T. 1181
C.T. 1184
C.T. 1186
C.T. 1211
C.T. 1214
C.T. 1222
C.T. 1255–1256
Low Inc—Franklin Co
County—Franklin
Parts:
Low Income
Low Inc—Gasconade
County—Gasconade
Parts:
Low Income
Low Inc—Gentry Co
County—Gentry
Parts:
Low Income
Low Inc—Greene Co

DENTAL: Missouri
Population Group Listing

Population Group

County—Greene
Parts:
Low Income
Low Inc—Grundy Co
County—Grundy
Parts:
Low Income
Low Inc—Harrison Co
County—Harrison
Parts:
Low Income
Low Inc—Henry Co
County—Henry
Parts:
Low Income
Low Inc—Howard Co
County—Howard
Parts:
Low Income
Low Inc—Howell Co
County—Howell
Parts:
Low Income
Low Inc—Jasper Co
County—Jasper
Parts:
Low Income
Low Inc—Jefferson Co
County—Jefferson
Parts:
Low Income
Low Inc—Johnson Co
County—Johnson
Parts:
Low Income
Low Inc—Knox Co
County—Knox
Parts:
Low Income
Low Inc—Laclede Co
County—Laclede
Parts:
Low Income
Low Inc—Lafayette Co
County—Lafayette
Parts:
Low Income
Low Inc—Lawrence Co
County—Lawrence
Parts:
Low Income
Low Inc—Lewis Co
County—Lewis
Parts:
Low Income
Low Inc—Lincoln Co
County—Lincoln
Parts:
Low Income
Low Inc—Linn Co
County—Linn
Parts:
Low Income
Low Inc—Livingston Co
County—Livingston
Parts:
Low Income
Low Inc—Macon Co
County—Macon
Parts:
Low Income
Low Inc—Madison Co

DENTAL: Missouri
Population Group Listing

Population Group

County—Madison
Parts:
Low Income
Low Inc—Marion Co
County—Marion
Parts:
Low Income
Low Inc—Mcdonald Co
County—McDonald
Parts:
Low–Income
Low Inc—Mississippi Co
County—Mississippi
Parts:
Low Income
Low Inc—N. St. Louis
County—St Louis City
Parts:
C.T. 1053–1055
C.T. 1061–1067
C.T. 1071–1077
C.T. 1081–1082
C.T. 1085
C.T. 1096–1097
C.T. 1101–1105
C.T. 1111–1115
C.T. 1122–1123
C.T. 1201–1203
C.T. 1212–1213
C.T. 1257
C.T. 1266–1267
Low Inc—New Madrid Co
County—New Madrid
Parts:
Low Income
Low Inc—Newton Co
County—Newton
Parts:
Low Income
Low Inc—Nodaway Co
County—Nodaway
Parts:
Low Income
Low Inc—North Kansas City
County—Jackson
Parts:
C.T. 1–4
C.T. 5.01
C.T. 6–27
C.T. 28.01–28.02
C.T. 29–34
C.T. 35.01–35.02
C.T. 36.01–36.02
C.T. 37–45
C.T. 59.01
Low Inc—Osage Co
County—Osage
Parts:
Low Income
Low Inc—Perry Co
County—Perry
Parts:
Low Income
Low Inc—Pettis Co
County—Pettis
Parts:
Low Income
Low Inc—Phelps Co
County—Phelps
Parts:
Low Income
Low Inc—Pike Co

DENTAL: Missouri
Population Group Listing

Population Group

County—Pike
Parts:
Low Income
Low Inc—Polk Co
County—Polk
Parts:
Low–Income
Low Inc—Pulaski Co
County—Pulaski
Parts:
Low Income
Low Inc—Putnam Co
County—Putnam
Parts:
Low Income
Low Inc—Reynolds Co
County—Reynolds
Parts:
Low Income
Low Inc—Saline Co
County—Saline
Parts:
Low Income
Low Inc—Schuyler Co
County—Schuyler
Parts:
Low Income
Low Inc—Scotland Co
County—Scotland
Parts:
Low Income
Low Inc—Scott Co
County—Scott
Parts:
Low Income
Low Inc—Shelby Co
County—Shelby
Parts:
Low Income
Low Inc—Southeast St. Louis
County—St Louis City
Parts:
C.T. 1014–1015
C.T. 1018
C.T. 1018.99
C.T. 1155–1157
C.T. 1164–1165
C.T. 1173–1174
C.T. 1185
C.T. 1221
C.T. 1224
C.T. 1231–1235
C.T. 1241–1243
C.T. 1246
Low Inc—St Clair Co
County—St Clair
Parts:
Low Income
Low Inc—St Francois Co
County—St Francois
Parts:
Low Income
Low Inc—Ste Genevieve
County—Ste Genevieve
Parts:
Low Income
Low Inc—Stoddard Co
County—Stoddard
Parts:
Low Income
Low Inc—Stone Co
County—Stone

DENTAL: Missouri
Population Group Listing

Population Group

Parts:
Low Income
Low Inc—Sullivan Co
County—Sullivan
Parts:
Low Income
Low Inc—Texas Co
County—Texas
Parts:
Low Income
Low Inc—Vernon Co
County—Vernon
Parts:
Low Income
Low Inc—W. Central St. Louis
County—St Louis City
Parts:
C.T. 1051.98
C.T. 1052
C.T. 1121
C.T. 1124
C.T. 1191–1193
Low Inc—Webster Co
County—Webster
Parts:
Low–Income
Low Inc—Worth Co
County—Worth
Parts:
Low Income
Low Inc—Wright Co
County—Wright
Parts:
Low Income
Low Income—Ray Co
County—Ray
Parts:
Low Income

DENTAL: Montana
County Listing

County Name

*Blaine
Service Area: Havre
*Carter
Service Area: Baker/Ekalaka
Service Area: Miles City
Cascade
Population Group: Medicaid—Cascade Co
*Custer
Service Area: Miles City
*Dawson
Service Area: Glendive
*Fallon
Service Area: Baker/Ekalaka
*Garfield
Service Area: Miles City
*Glacier
*Golden Valley
*Hill
Service Area: Havre
*Madison
Population Group: Low Inc—Madison County
*McCone
Service Area: Glendive
*Missoula
Population Group: Low Income—Missoula
*Park
Population Group: Low Inc—Park Co
*Powder River

DENTAL: Montana
County Listing

County Name

Service Area: Miles City
*Prairie
Service Area: Glendive
Service Area: Miles City
*Roosevelt
Service Area: Poplar/Wolf Point
*Sanders
*Silver Bow
Population Group: Low Inc—Silver Bow Co
*Stillwater
*Treasure
*Wheatland
*Wibaux
Service Area: Glendive
Yellowstone
Population Group: Low Inc—Yellowstone Co

DENTAL: Montana
Service Area Listing

Service Area Name

Baker/Ekalaka
County—Carter
Parts:
Ekalaka Division
County—Fallon
Glendive
County—Dawson
County—McCone
County—Prairie
Parts:
Terry South Division
County—Dawson
County—McCone
County—Wibaux
Havre
County—Blaine
County—Hill
Miles City
County—Carter
Parts:
Little Missouri Division
County—Custer
County—Garfield
County—Powder River
County—Prairie
Parts:
Terry North Division
Poplar/Wolf Point
County—Roosevelt
Parts:
Fort Peck Reservation Division

DENTAL: Montana
Population Group Listing

Population Group

Low Inc—Madison County
County—Madison
Parts:
Low Income
Low Inc—Park Co
County—Park
Parts:
Low Income
Low Inc—Silver Bow Co
County—Silver Bow
Parts:
Low Income
Low Inc—Yellowstone Co
County—Yellowstone

DENTAL: Montana
Population Group Listing

Population Group

Parts:
Yellowstone
Low Income—Missoula
County—Missoula
Parts:
Low–Income
Medicaid—Cascade Co
County—Cascade
Parts:
Medicaid Eligible

DENTAL: Nebraska
County Listing

County Name

*Arthur
Service Area: Arthur/Grant
*Blaine
*Cuming
Population Group: Am In—Winnebago/Omaha
*Frontier
*Furnas
*Grant
Service Area: Arthur/Grant
*Greeley
Service Area: Greeley/Wheeler
*Hayes
Service Area: Hayes/Hitchcock
*Hitchcock
Service Area: Hayes/Hitchcock
*Logan
Service Area: Logan/MCPherson
*Morrill
*MCPherson
Service Area: Logan/MCPherson
*Scotts Bluff
Population Group: Medicaid—Scotts Bluff Co
*Thurston
Population Group: Am In—Winnebago/Omaha
*Wheeler
Service Area: Greeley/Wheeler

DENTAL: Nebraska
Service Area Listing

Service Area Name

Arthur/Grant
County—Arthur
County—Grant
Greeley/Wheeler
County—Greeley
County—Wheeler
Hayes/Hitchcock
County—Hayes
County—Hitchcock
Logan/MCPherson
County—Logan
County—MCPherson

DENTAL: Nebraska
Population Group Listing

Population Group

Am In—Winnebago/Omaha
County—Cuming
Parts:
Om In—Bancroft Twp
Om In—Cleveland Twp
County—Thurston

DENTAL: Nebraska
Population Group Listing

Population Group

Parts:
Winnebago Indians
Medicaid—Scotts Bluff Co
County—Scotts Bluff
Parts:
Medicaid Eligible

DENTAL: Nevada
County Listing

County Name

*Churchill
Service Area: Dixie Valley
Clark
Service Area: Northeast Clark
Population Group: Low Inc—North Central Las Vegas
Population Group: Low Inc—NE Central Las Vegas
Population Group: Low Inc—SW Central Las Vegas
*Elko
Service Area: Jackpot
Service Area: Montello/West Wendover
Service Area: Mountain City/Jarbidge
Service Area: Wells
*Esmeralda
*Eureka
*Humboldt
Service Area: McDermitt
Service Area: Summit Lake
*Nye
*Pershing
Washoe
Population Group: Low Inc—Reno/Sparks

DENTAL: Nevada
Service Area Listing

Service Area Name

Dixie Valley
County—Churchill
Parts:
Dixie Valley Division
Jackpot
County—Elko
Parts:
Jackpot Division
McDermitt
County—Humboldt
Parts:
McDermitt Division
Montello/West Wendover
County—Elko
Parts:
Montello Division
West Wendover Division
Mountain City/Jarbidge
County—Elko
Parts:
Jarbidge Division
Mountain City Division
Northeast Clark
County—Clark
Parts:
C.T. 56.02–56.03
C.T. 59
Summit Lake
County—Humboldt
Parts:
Summit Lake Division
Wells

DENTAL: Nevada
Service Area Listing

Service Area Name

County—Elko
Parts:
Wells Division

DENTAL: Nevada
Population Group Listing

Population Group

Low Inc—North Central Las Vegas
County—Clark
Parts:
C.T. 1.01–1.02
C.T. 1.04–1.05
C.T. 2.01–2.02
C.T. 3.01–3.02
C.T. 4
C.T. 5.03–5.04
C.T. 5.06–5.09
C.T. 6–9
C.T. 10.98
C.T. 11–15
C.T. 16.02
C.T. 34.01
C.T. 35
C.T. 36.02
C.T. 37–38
C.T. 39.97
C.T. 40–45
C.T. 47.02
Low Inc—NE Central Las Vegas
County—Clark
Parts:
C.T. 46
C.T. 47.03–47.06
C.T. 48.97–48.98
Low Inc—SW Central Las Vegas
County—Clark
Parts:
C.T 24.02
C.T 25.01
C.T. 18.02
C.T. 19–20
C.T. 22.01–22.02
C.T. 23
C.T. 24.01
C.T. 25.02
C.T. 26
C.T. 27.01–27.02
C.T. 29.13
Low Inc—Reno/Sparks
County—Washoe
Parts:
C.T. 1–3
C.T. 7
C.T. 9
C.T. 10.04
C.T. 14–15
C.T. 17–19
C.T. 21.01
C.T. 22.03–22.04
C.T. 28
C.T. 33.01

DENTAL: New Hampshire
County Listing

County Name

*Belknap
Population Group: Low Inc—Laconia
Facility: SCI—Laconia
*Coos
Service Area: Upper Connecticut Valley

DENTAL: New Hampshire
County Listing

County Name

Population Group: Low Inc—Berlin
*Grafton
Population Group: Low Inc—Laconia
Population Group: Low Inc—Northern Grafton
Hillsboro
Population Group: Low Inc—Manchester
Merrimack
Population Group: Low Inc—Laconia
Facility: SCI—Concord

DENTAL: New Hampshire
Service Area Listing

Service Area Name

Upper Connecticut Valley
County—Coos
Parts:
Clarksville Town
Colebrook Town
Columbia Town
Dixville Township
Errol Town
Millsfield Township
Pittsburg Town
Stewartstown Town
Wentworth Location

DENTAL: New Hampshire
Population Group Listing

Population Group

Low Inc—Berlin
County—Coos
Parts:
Berlin City
Cambridge Township
Dummer Town
Gorham Town
Milan Town
Randolph Town
Shelburne Town
Stark Town
Success Township
Low Inc—Laconia
County—Belknap
Parts:
Alton Town
Barnstead Town
Belmont Town
Center Harbor Town
Gilford Town
Gilmanton Town
Laconia City
Meredith Town
New Hampton Town
Sanbornton Town
Tilton Town
County—Grafton
Parts:
Ashland Town
Bridgewater Town
Bristol Town
Campton Town
Holderness Town
Plymouth Town
County—Merrimack
Parts:
Boscawen Town
Canterbury Town
Franklin City
Loudon Town

DENTAL: New Hampshire
Population Group Listing

Population Group

Northfield Town
Pittsfield Town
Low Inc—Manchester
County—Hillsboro
Parts:
C.T. 1
C.T. 2.01–2.02
C.T. 3–8
C.T. 9.01
C.T. 11–25
Low Inc—Northern Grafton
County—Grafton
Parts:
Bath Town
Benton Town
Bethlehem Town
Easton Town
Ellsworth Town
Franconia Town
Haverhill Town
Landaff Town
Lincoln Town
Lisbon Town
Littleton Town
Livermore Town
Lyman Town
Monroe Town
Orford Town
Piermont Town
Rumney Town
Sugar Hill Town
Thornton Town
Warren Town
Waterville Valley Town
Wentworth Town
Woodstock Town

DENTAL: New Hampshire
Facility Listing

Facility Name

SCI—Concord
County—Merrimack
SCI—Laconia
County—Belknap

DENTAL: New Jersey
County Listing

County Name

Atlantic
Population Group: Low Inc—Hammonton
Camden
Population Group: Low Inc—Camden City
Cumberland
Population Group: Low Inc/MFW—Cumberland Co
Facility: FCI Fairton
Mercer
Population Group: Medicaid—Trenton
Salem
Population Group: Low Inc/MFW—West Salem

DENTAL: New Jersey
Population Group Listing

Population Group

Low Inc—Camden City
County—Camden
Parts:
Camden City (6001–6020)

DENTAL: New Jersey
Population Group Listing

Population Group

Low Inc—Hammonton
County—Atlantic
Parts:
Buena Borough
Buena Vista
Egg Harbor City
Folsom Borough
Hammonton
Mullica
Low Inc/MFW—Cumberland Co
County—Cumberland
Parts:
Low Income
MFW
Low Inc/MFW—West Salem
County—Salem
Parts:
Carney's Point Township
Mannington Township
Oldman's Township
Penns Grove Borough
Pennsville Township
Salem City
Medicaid—Trenton
County—Mercer
Parts:
C.T. 1–24

DENTAL: New Jersey
Facility Listing

Facility Name

FCI Fairton 1
County—Cumberland

DENTAL: New Mexico
County Listing

County Name

Bernalillo
Service Area: North Valley
Service Area: Southwest Valley
*Catron
*Cibola
*Curry
Population Group: Low Inc—Curry Co
Dona Ana
Service Area: Hatch
Service Area: Southern Dona Ana
Population Group: Low Inc—Las Cruces
Population Group: Low Income—Dona Ana Hill
*Eddy
Population Group: Low Inc—Eddy Co
*Grant
Population Group: Low Inc—Grant Co
*Guadalupe
*Harding
*Hidalgo
*Luna
*McKinley
*Mora
*Otero
*Rio Arriba
Service Area: North/Western Rio Arriba
Service Area: Penasco/Truchas/Embudo
*Roosevelt
Population Group: Low Income—Roosevelt Co
*San Miguel
Sandoval
Service Area: Cuba (N. Sandoval)

DENTAL: New Mexico
County Listing

County Name

Santa Fe
  Population Group: Low-Inc—Santa Fe Co
*Sierra
*Taos
  Service Area: North/Western Rio Arriba
  Service Area: Penasco/Truchas/Embudo
  Service Area: Questa
*Torrance
Valencia
  Population Group: Low Inc—Valencia

DENTAL: New Mexico
Service Area Listing

Service Area Name

Cuba (N. Sandoval)
  County—Sandoval
    Parts:
      Cuba Division
      Jemez Division
      Santo Domingo Division
Hatch
  County—Dona Ana
    Parts:
      Hatch Division
North Valley
  County—Bernalillo
    Parts:
      C.T. 29
      C.T. 30.01–30.02
      C.T. 31
      C.T. 32.01–32.02
      C.T. 35.01–35.02
      C.T. 36
North/Western Rio Arriba
  County—Rio Arriba
    Parts:
      Coyote Division
      Jicarilla Division
      Rio Chama Division
      Tierra Amarilla Division
      Vallecitas Division
      Western Rio Arriba Division
  County—Taos
    Parts:
      Tres Piedras Division
Penasco/Truchas/Embudo
  County—Rio Arriba
    Parts:
      Chimayo Division
      Dixon Division
  County—Taos
    Parts:
      Penasco Division
      Picuris Division
Questa
  County—Taos
    Parts:
      Arroyo Hondo Division
      Questa Division
Southern Dona Ana
  County—Dona Ana
    Parts:
      Anthony Division
      South Dona Ana Division
Southwest Valley
  County—Bernalillo
    Parts:
      C.T. 23
      C.T. 24.01–24.02
      C.T. 40.01
      C.T. 43

DENTAL: New Mexico
Service Area Listing

Service Area Name

C.T. 44.01–44.02
C.T. 45.01–45.02
C.T. 46.02–46.04

DENTAL: New Mexico
Population Group Listing

Population Group

Low Inc—Curry Co 2
  County—Curry
    Parts:
      Low Income
Low Inc—Eddy Co
  County—Eddy
    Parts:
      Low Income
Low Inc—Grant Co
  County—Grant
    Parts:
      Low Income
Low Inc—Las Cruces
  County—Dona Ana
    Parts:
      Las Cruces Division
Low Inc—Valencia
  County—Valencia
    Parts:
      Low Income
Low Income—Dona Ana Hill
  County—Dona Ana
    Parts:
      Low Income
Low Income—Roosevelt Co
  County—Roosevelt
    Parts:
      Low Income
Low-Inc—Santa Fe Co
  County—Santa Fe
    Parts:
      Low Inc

DENTAL: New York
County Listing

County Name

*Allegany
  Service Area: Arcade
  Service Area: Letchworth
  Population Group: Low Inc—Wellsville
Bronx
  Service Area: Morris Heights
*Cattaraugus
  Service Area: Arcade
  Service Area: Randolph-Ellicottville
  Population Group: Low Inc—Olean
Cayuga
  Population Group: Low-Income Groton-Moravia
Chautauqua
  Population Group: Low Inc—Dunkirk/Fredonia
  Population Group: Low Inc—Jamestown
  Population Group: Low Inc—Westfield
*Clinton
  Population Group: Low Income—Dannemora
*Cortland
  Population Group: Low Income—Cortland Co
Dutchess
  Population Group: Low Inc—Beacon City
*Essex
  Population Group: Low Inc—Upper Hudson
*Franklin
  Facility: FCI Raybrook
*Hamilton
  Population Group: Low Inc—Upper Hudson
*Jefferson
  Population Group: Low-Income Jefferson County
Kings
  Service Area: Bedford-Stuyvesant
  Service Area: Coney Island
  Service Area: Sunset Park
*Lewis
  Population Group: Low Inc—Lewis Co
Monroe
  Population Group: Low Inc—Westside Rochester
New York
  Service Area: Central/West Harlem
  Service Area: East Harlem
  Service Area: Lower East Side
  Service Area: Washington Hgts/Inwood
  Population Group: Low Inc—Chinatown/Lwr Manhattan
Onondaga
  Population Group: Low Inc—Syracuse
Orange
  Service Area: City Of Newburgh
  Population Group: MFW—Goshen/Warwick
  Population Group: MFW—Walden
Oswego
  Population Group: Low Inc—Oswego Co
Saratoga
  Population Group: Low Inc—Upper Hudson
Schenectady
  Population Group: Low Inc—Central Schenectady City
*St Lawrence
  Population Group: Low Income—Ogdensburg
Tioga
  Population Group: Low Income—Tioga County
*Tompkins
  Population Group: Low-Income Groton-Moravia
*Ulster
  Population Group: MFW—New Paltz
Warren
  Population Group: Low Inc—Upper Hudson
Washington
  Population Group: Low Inc—Upper Hudson
*Wyoming
  Service Area: Arcade
  Service Area: Letchworth

DENTAL: New York
Service Area Listing

Service Area Name

Arcade
  County—Allegany
    Parts:
      Centerville Town
      Rushford Town
  County—Cattaraugus
    Parts:
      Farmersville Town
      Freedom Town
      Machias Town
      Yorkshire Town
  County—Wyoming

DENTAL: New York
Service Area Listing

Service Area Name

Parts:
Arcade Town
Eagle Town
Java Town
Orangeville Town
Sheldon Town
Wethersfield Town
Bedford-Stuyvesant
County—Kings
Parts:
C.T. 213
C.T. 217
C.T. 219
C.T. 221
C.T. 223
C.T. 225
C.T. 227
C.T. 229
C.T. 231
C.T. 233
C.T. 235
C.T. 237
C.T. 239
C.T. 241
C.T. 243
C.T. 245
C.T. 247
C.T. 249
C.T. 251
C.T. 253
C.T. 255
C.T. 257
C.T. 259.01–259.02
C.T. 261
C.T. 263
C.T. 265
C.T. 267
C.T. 269
C.T. 271.01–271.02
C.T. 273
C.T. 275
C.T. 277
C.T. 279
C.T. 281
C.T. 283
C.T. 285.01–285.02
C.T. 287
C.T. 289
C.T. 291
C.T. 293
C.T. 295
C.T. 297
C.T. 299
C.T. 301
C.T. 303
C.T. 307
C.T. 309
C.T. 311
C.T. 313
C.T. 315
C.T. 317.01–317.02
C.T. 319
C.T. 321
C.T. 323
C.T. 325
C.T. 327
C.T. 329
C.T. 331
C.T. 333
C.T. 335
C.T. 337
C.T. 339

DENTAL: New York
Service Area Listing

Service Area Name

C.T. 341
C.T. 343
C.T. 345
C.T. 347
C.T. 349
C.T. 351
C.T. 353
C.T. 355
C.T. 357
C.T. 359
C.T. 361
C.T. 363
C.T. 365.01–365.02
C.T. 367
C.T. 369
C.T. 371
C.T. 373
C.T. 375
C.T. 377
C.T. 379
C.T. 381
C.T. 383
C.T. 385
C.T. 387
Central/West Harlem
County—New York
Parts:
C.T. 186
C.T. 190
C.T. 197.02
C.T. 200
C.T. 201.02
C.T. 207.02
C.T. 208
C.T. 209.01–209.02
C.T. 211–212
C.T. 213.01–213.02
C.T. 214
C.T. 216
C.T. 217.01–217.02
C.T. 218
C.T. 219.97
C.T. 220
C.T. 221.01–221.02
C.T. 222
C.T. 223.97–223.98
C.T. 224–226
C.T. 227.01–227.02
C.T. 228–230
C.T. 231.01–231.02
C.T. 232–234
C.T. 235.01–235.02
C.T. 236–237
C.T. 239
C.T. 241
C.T. 243.02
City Of Newburgh
County—Orange
Parts:
C.T. 1–6
Coney Island
County—Kings
Parts:
C.T. 326
C.T. 328
C.T. 330
C.T. 340
C.T. 342
C.T. 348.01
C.T. 352
East Harlem
County—New York

DENTAL: New York
Service Area Listing

Service Area Name

Parts:
C.T. 156.02
C.T. 158.02
C.T. 160.02
C.T. 162
C.T. 164
C.T. 166
C.T. 168
C.T. 170
C.T. 172.01–172.02
C.T. 174.01–174.02
C.T. 178
C.T. 180
C.T. 182
C.T. 184
C.T. 188
C.T. 192
C.T. 194
C.T. 196
C.T. 198
C.T. 202
C.T. 204
C.T. 206
C.T. 210
Letchworth
County—Allegany
Parts:
Allen Town
Caneadea Town
Granger Town
Hume Town
County—Wyoming
Parts:
Castile Town
Gainesville Town
Genesee Falls Town
Pike Town
Lower East Side
County—New York
Parts:
C.T. 10.02
C.T. 20
C.T. 22.01–22.02
C.T. 24
C.T. 26.01–26.02
C.T. 28
Morris Heights
County—Bronx
Parts:
C.T. 205
C.T. 213.01–213.02
C.T. 215.01–215.02
C.T. 217.01
C.T. 239
C.T. 243
C.T. 245
C.T. 247
C.T. 249
C.T. 251
C.T. 253
C.T. 255
C.T. 257
Randolph-Ellicottville
County—Cattaraugus
Parts:
Carrollton Town
Coldspring Town
Conewango Town
Ellicottville Town
Franklinville Town
Great Valley Town
Humphrey Town

DENTAL: New York
Service Area Listing

Service Area Name

Little Valley Town
Mansfield Town
Napoli Town
New Albion Town
Randolph Town
Red House Town
Salamanca City
Salamanca Town
South Valley Town
Sunset Park
County—Kings
Parts:
C.T. 2
C.T. 18
C.T. 20
C.T. 22
C.T. 72
C.T. 74
C.T. 76
C.T. 78
C.T. 80
C.T. 82
C.T. 84
C.T. 86
C.T. 88
C.T. 90
C.T. 92
C.T. 94
C.T. 96
C.T. 98
C.T. 100–102
C.T. 108
C.T. 110
C.T. 112
C.T. 117
C.T. 121–122
C.T. 141
C.T. 143
C.T. 145
C.T. 147
Washington Hgts/Inwood
County—New York
Parts:
C.T. 243.01
C.T. 245
C.T. 247
C.T. 249
C.T. 251
C.T. 253
C.T. 255
C.T. 261
C.T. 263
C.T. 265
C.T. 267
C.T. 269
C.T. 271
C.T. 273
C.T. 275
C.T. 277
C.T. 279
C.T. 281
C.T. 283
C.T. 285
C.T. 287
C.T. 289
C.T. 291
C.T. 293
C.T. 295
C.T. 297
C.T. 301
C.T. 303
C.T. 307

DENTAL: New York
Service Area Listing

Service Area Name

C.T. 309
C.T. 311

DENTAL: New York
Population Group Listing

Population Group

Low Inc—Beacon City
County—Dutchess
Parts:
C.T. 2101–2103
Low Inc—Central Schenectady City
County—Schenectady
Parts:
C.T. 201–204
C.T. 207–209
C.T. 210.01–210.02
C.T. 211.02–211.03
C.T. 214–215
C.T. 217
Low Inc—Chinatown/Lwr Manhattan
County—New York
Parts:
C.T. 2.01–2.02
C.T. 6
C.T. 8
C.T. 10.01
C.T. 14.01–14.02
C.T. 15.01
C.T. 16
C.T. 18
C.T. 25
C.T. 27
C.T. 29
C.T. 30.01–30.02
C.T. 32
C.T. 34
C.T. 36.01–36.02
C.T. 38
C.T. 40–41
C.T. 43
C.T. 45
C.T. 55.02
Low Inc—Dunkirk/Fredonia
County—Chautauqua
Parts:
Arkwright Town
Charlotte Town
Dunkirk City
Dunkirk Town
Pomfret Town
Portland Town
Sheridan Town
Stockton Town
Low Inc—Jamestown
County—Chautauqua
Parts:
Busti Town
Carroll Town
Ellery Town
Ellicott Town
Ellington Town
Gerry Town
Harmony Town
Jamestown City
Kiantone Town
North Harmony Town
Poland Town
Low Inc—Lewis Co
County—Lewis
Parts:
Low Income

DENTAL: New York
Population Group Listing

Population Group

Low Inc—Olean
County—Cattaraugus
Parts:
Allegany Town
Hinsdale Town
Ischua Town
Lyndon Town
Olean City
Olean Town
Portville Town
Low Inc—Oswego Co
County—Oswego
Parts:
Low Income
Low Inc—Syracuse
County—Onondaga
Parts:
C.T. 5–7
C.T. 13–16
C.T. 21–24
C.T. 29–35
C.T. 36.01
C.T. 38–45
C.T. 51–55
C.T. 57–59
C.T. 61.01–61.02
Low Inc—Upper Hudson
County—Essex
Parts:
Crown Point Town
Minerva Town
Schroon Town
Ticonderoga
County—Hamilton
Parts:
Indian Lake Town
County—Saratoga
Parts:
Corinth Town
Day Town
Edinburg Town
Hadley Town
Moreau Town
County—Warren
Parts:
Warren
County—Washington
Parts:
Argyle Town
Fort Ann Town
Fort Edward Town
Kingsbury Town
Putnam Town
Low Inc—Wellsville
County—Allegany
Parts:
Alfred Town
Alma Town
Almond Town
Amity Town
Andover Town
Angelica Town
Belfast Town
Birdsall Town
Bolivar Town
Burns Town
Clarksville Town
Cuba Town
Friendship Town
Genesee Town
Grove Town
Independence Town

DENTAL: New York
Population Group Listing

Population Group

New Hudson Town
Scio Town
Ward Town
Wellsville Town
West Almond Town
Willing Town
Wirt Town
Low Inc—Westfield
County—Chautauqua
Parts:
Chautauqua Town
Clymer Town
French Creek Town
Mina Town
Ripley Town
Sherman Town
Westfield Town
Low Inc—Westside Rochester
County—Monroe
Parts:
C.T. 2
C.T. 16–17
C.T. 23–24
C.T. 27
C.T. 40–41
C.T. 62–71
C.T. 75
C.T. 87.01–87.02
C.T. 88
C.T. 94.03
C.T. 95
C.T. 96.01–96.04
Low Income—Cortland Co
County—Cortland
Parts:
Low-Income
Low Income—Dannemora
County—Clinton
Parts:
Dannemora Town
Ellenburg Town
Saranacv Town
Low Income—Ogdensburg
County—St Lawrence
Parts:
De Peyster Town
Lisbon Town
Morristown Town
Ogdensburg City
Oswegatchie Town
Waddington Town
Low Income—Tioga County
County—Tioga
Parts:
Low Income
Low-Income Groton-Moravia
County—Cayuga
Parts:
Locke Town
Moravia Town
Sempronius Town
Summerhill Town
County—Tompkins
Parts:
Groton Town
Low-Income Jefferson County
County—Jefferson
Parts:
Low-Income
MFW—Goshen/Warwick
County—Orange
Parts:

DENTAL: New York
Population Group Listing

Population Group

Goshen Town
Warwick Town
MFW—New Paltz
County—Ulster
Parts:
New Paltz
MFW—Walden
County—Orange
Parts:
Montgomery Town

DENTAL: New York
Facility Listing

Facility Name

FCI Raybrook
County—Franklin

DENTAL: North Carolina
County Listing

County Name

*Alleghany
Population Group: Low Inc—Alleghany
*Anson
*Avery
Population Group: Low Inc—Avery
*Bertie
Population Group: Low Inc—Bertie
*Bladen
Population Group: Low Inc—Bladen
Burke
Population Group: Low Inc—Burke Co
Cabarrus
Population Group: Low Inc—Cabarrus
*Caswell
Population Group: Low Inc—Caswell
Chatham
Population Group: Low Inc—Chatham
*Cherokee
Population Group: Low Inc—Cherokee
*Clay
Population Group: Low Inc—Clay
*Cleveland
Population Group: Low Income—Cleveland
*Columbus
Population Group: Low Inc—Columbus
*Craven
Population Group: Low Inc—Craven
Cumberland
Population Group: Low Inc—Cumberland Co
*Duplin
Population Group: Low Inc—Duplin
Durham
Population Group: Low Inc—Central Durham
Edgecombe
Population Group: Low Inc—Edgecombe
Franklin
Population Group: Low Inc—Franklin
Gaston
Population Group: Medicaid—Gaston Co
Guilford
Population Group: Low Inc—High Point
Population Group: Low Inc—Inner Greensboro
*Halifax
*Harnett
Population Group: Low Inc—Harnett Co
*Haywood
Population Group: Low Inc—Haywood

DENTAL: North Carolina
County Listing

County Name

*Henderson
Population Group: Low Inc/MFW—Henderson
*Hoke
Population Group: Low Inc—Hoke
*Jones
Population Group: Low Inc—Jones
*Lee
Population Group: Low Inc—Lee Co
*Lenoir
Population Group: Low Inc—Lenoir
*Macon
Population Group: Low Inc—Macon
Madison
Population Group: Low Inc—Madison
*Mitchell
Population Group: Low Inc—Mitchell
*Montgomery
Population Group: Low Inc—Montgomery
New Hanover
Population Group: Low Inc—New Hanover
*Northampton
*Pamlico
Population Group: Low Inc—Pamlico
*Person
Population Group: Low Inc—Person
Pitt
Population Group: Low Inc—Pitt
*Richmond
Population Group: Low Inc—Richmond
*Robeson
Population Group: Low Inc—Robeson
Rowan
Population Group: Low Inc—Rowan
*Sampson
Population Group: Low Inc—Sampson
*Surry
Population Group: Low Income—Surry
*Swain
Population Group: Low Inc—Swain
*Vance
Facility: FCI—Butner
*Warren
Wayne
Population Group: Low Inc—Wayne
*Wilkes
Yadkin
Population Group: Low Inc—Yadkin
*Yancey
Population Group: Low-Income —Yancey County

DENTAL: North Carolina
Population Group Listing

Population Group

Low Inc—Alleghany
County—Alleghany
Parts:
Low Income
Low Inc—Avery
County—Avery
Parts:
Low Income
Low Inc—Bertie
County—Bertie
Parts:
Low Income
Low Inc—Bladen
County—Bladen
Parts:
Low Income

DENTAL: North Carolina
Population Group Listing

Population Group

Low Inc—Burke Co
County—Burke
Parts:
Low Income
Low Inc—Cabarrus
County—Cabarrus
Parts:
C.T. 407–411
C.T. 418–421
C.T. 423–424
Low Inc—Caswell
County—Caswell
Parts:
Low Income
Low Inc—Central Durham
County—Durham
Parts:
C.T. 1.01
C.T. 2
C.T. 3.01–3.02
C.T. 4.02
C.T. 5
C.T. 8.01–8.02
C.T. 9
C.T. 10.01–10.02
C.T. 11
C.T. 12.01–12.02
C.T. 13.01
C.T. 13.03–13.04
C.T. 14
C.T. 15.01–15.02
C.T. 17.09
C.T. 18.02
Low Inc—Chatham
County—Chatham
Parts:
Low Income
Low Inc—Cherokee
County—Cherokee
Parts:
Low Income
Low Inc—Clay
County—Clay
Parts:
Low Income
Low Inc—Columbus
County—Columbus
Parts:
Low Income
Low Inc—Craven
County—Craven
Parts:
Low Income
Low Inc—Cumberland Co
County—Cumberland
Parts:
Low Inc
Low Inc—Duplin
County—Duplin
Parts:
Low Income
Low Inc—Edgecombe
County—Edgecombe
Parts:
Low Income
Low Inc—Franklin
County—Franklin
Parts:
Low Income
Low Inc—Harnett Co
County—Harnett
Parts:

DENTAL: North Carolina
Population Group Listing

Population Group

Low Income
Low Inc—Haywood
County—Haywood
Parts:
Low Income
Low Inc—High Point
County—Guilford
Parts:
C.T. 138–139
C.T. 142–143
C.T. 144.06
C.T. 145.02–145.03
C.T. 146
Low Inc—Hoke
County—Hoke
Parts:
Low Income
Low Inc—Inner Greensboro
County—Guilford
Parts:
C.T. 101
C.T. 103
C.T. 107.02
C.T. 108.01
C.T. 109–110
C.T. 111.01–111.02
C.T. 112–115
C.T. 127.05–127.07
Low Inc—Jones
County—Jones
Parts:
Low Income
Low Inc—Lee Co
County—Lee
Parts:
Low Income
Low Inc—Lenoir
County—Lenoir
Parts:
Low Income
Low Inc—Macon
County—Macon
Parts:
Low Income
Low Inc—Madison
County—Madison
Parts:
Low Income
Low Inc—Mitchell
County—Mitchell
Parts:
Low Income
Low Inc—Montgomery
County—Montgomery
Parts:
Low Income
Low Inc—New Hanover
County—New Hanover
Parts:
Low Income
Low Inc—Pamlico
County—Pamlico
Parts:
Low Income
Low Inc—Person
County—Person
Parts:
Low Income
Low Inc—Pitt
County—Pitt
Parts:
Low Income

DENTAL: North Carolina
Population Group Listing

Population Group

Low Inc—Richmond
County—Richmond
Parts:
Low Income
Low Inc—Robeson
County—Robeson
Parts:
Low Income
Low Inc—Rowan
County—Rowan
Parts:
Low Income
Low Inc—Sampson
County—Sampson
Parts:
Low Income
Low Inc—Swain
County—Swain
Parts:
Low Income
Low Inc—Wayne
County—Wayne
Parts:
Low Income
Low Inc—Yadkin
County—Yadkin
Parts:
Low Income
Low Inc/MFW—Henderson
County—Henderson
Parts:
Low Inc/MFW
Low Income—Cleveland
County—Cleveland
Parts:
Low-Income
Low Income—Surry
County—Surry
Parts:
Low-Income
Low-Income —Yancey County
County—Yancey
Parts:
Low-Income
Medicaid—Gaston Co
County—Gaston
Parts:
Medicaid

DENTAL: North Carolina
Facility Listing

Facility Name

FCI—Butner
County—Vance

DENTAL: North Dakota
County Listing

County Name

*Benson
*Billings
Burleigh
Facility: Nd State Penitentiary
Cass
Facility: Family Health Care Center
*Dunn
*Golden Valley
*Griggs
Service Area: Griggs/Steele
*Kidder
*McIntosh

DENTAL: North Dakota
County Listing

County Name

*McKenzie
*Nelson
*Rolette
*Sioux
*Slope
*Steele
Service Area: Griggs/Steele
*Towner

DENTAL: North Dakota
Service Area Listing

Service Area Name

Griggs/Steele
County—Griggs
County—Steele

DENTAL: North Dakota
Facility Listing

Facility Name

Family Health Care Center
County—Cass
Nd State Penitentiary
County—Burleigh

DENTAL: Ohio
County Listing

County Name

*Adams
Population Group: Low Inc—Adams Co
*Ashland
Population Group: Low Inc—Ashland Co
*Athens
*Brown
Population Group: Low Inc—Brown Co
Clark
Population Group: Low Inc—SW Springfield City
Columbiana
Population Group: Low Inc—Columbiana Co
Cuyahoga
Service Area: Corlett/Mt. Pleas/Wdland
Service Area: Glenville (Area I—Cleveland)
Service Area: Western Collinwood
Population Group: Low Inc—Hough/Norwood
Population Group: Low Inc—Central/Fairfax/Kinsman
Franklin
Population Group: Low Inc—Near Eastside (Columbus)
Hamilton
Population Group: Hmlss Pop—Cincinnati (S)
*Jackson
*Meigs
Montgomery
Population Group: Hmlss—Central Dayton (S)
Population Group: Low Inc—West Dayton
*Muskingum
Population Group: Low Inc—Muskingum/Perry
*Perry
Population Group: Low Inc—Muskingum/Perry
*Pike
Population Group: Low Inc—Pike Co
Richland
Population Group: Low Inc—Richland Co
*Ross
Population Group: Low Income—Ross County
*Sandusky
Population Group: Low Inc/MFW—Sandusky Co
*Scioto
Population Group: Low Inc—Scioto Co
*Seneca
Population Group: Low Inc—Seneca Co
*Vinton
Washington
Population Group: Low Inc—Washington Co

DENTAL: Ohio
Service Area Listing

Service Area Name

Corlett/Mt. Pleas/Wdland
County—Cuyahoga
Parts:
C.T. 1155
C.T. 1198–1199
C.T. 1204–1206
C.T. 1207.01–1207.02
C.T. 1208.01–1208.02
C.T. 1211–1213
C.T. 1214.01–1214.02
C.T. 1215–1216
C.T. 1275
Glenville (Area I—Cleveland)
County—Cuyahoga
Parts:
C.T. 1114.01–1114.02
C.T. 1161–1168
C.T. 1181–1185
Western Collinwood
County—Cuyahoga
Parts:
C.T. 1169
C.T. 1171.01–1171.02
C.T. 1172.01–1172.02
C.T. 1173–1175
C.T. 1179
C.T. 1261

DENTAL: Ohio
Population Group Listing

Population Group

Hmlss—Central Dayton (S)
County—Montgomery
Parts:
C.T. 15
C.T. 17
C.T. 21
Hmlss Pop—Cincinnati (S)
County—Hamilton
Parts:
C.T. 1–2
C.T. 3.01–3.02
C.T. 4
C.T. 6–23
C.T. 25–39
C.T. 41–43
C.T. 61
C.T. 64–75
C.T. 77–78
C.T. 81
C.T. 86.01
C.T. 87
C.T. 89
C.T. 91–96
C.T. 103
Low Inc—Adams Co
County—Adams
Parts:
Low Income
Low Inc—Ashland Co
County—Ashland
Parts:
Low Income
Low Inc—Brown Co
County—Brown
Parts:
Low Income
Low Inc—Central/Fairfax/Kinsman
County—Cuyahoga
Parts:
C.T. 1079
C.T. 1087–1089
C.T. 1093
C.T. 1096–1099
C.T. 1103
C.T. 1129
C.T. 1131–1139
C.T. 1141–1145
C.T. 1147–1148
Low Inc—Columbiana Co
County—Columbiana
Parts:
Low Income
Low Inc—Hough/Norwood
County—Cuyahoga
Parts:
C.T. 1112–1113
C.T. 1115–1118
C.T. 1119.01–1119.02
C.T. 1121–1128
C.T. 1186.01–1186.02
C.T. 1189
Low Inc—Muskingum/Perry
County—Muskingum
Parts:
Low Income
County—Perry
Parts:
Low Income
Low Inc—Near Eastside (Columbus)
County—Franklin
Parts:
C.T. 25.20
C.T. 28–29
C.T. 36–38
C.T. 53
C.T. 54.10
Low Inc—Pike Co
County—Pike
Parts:
Low Income
Low Inc—Richland Co
County—Richland
Parts:
Low Income
Low Inc—Scioto Co
County—Scioto
Parts:
Low Income
Low Inc—Seneca Co
County—Seneca
Parts:
Low Income

DENTAL: Ohio
Population Group Listing

Population Group

Low Inc—SW Springfield City
County—Clark
Parts:
C.T. 1–3
C.T. 9.02
C.T. 10
C.T. 11.01–11.02
C.T. 12
Low Inc—Washington Co
County—Washington
Parts:
Low Income
Low Inc—West Dayton
County—Montgomery
Parts:
C.T. 2–4
C.T. 7
C.T. 10
C.T. 35–45
Low Inc/MFW—Sandusky Co
County—Sandusky
Parts:
Low Income
MFW
Low Income—Ross County
County—Ross
Parts:
Low Income

DENTAL: Oklahoma
County Listing

County Name

*Caddo
Canadian
Facility: FCI El Reno
*Coal
Creek
*Haskell
*Le Flore
Service Area: Talihina
*McCurtain
Oklahoma
Service Area: Northeast Oklahoma City
Population Group: Low Inc—SE Oklahoma City
Osage
Pottawatomie
Service Area: Konawa
*Pushmataha
Service Area: Talihina
*Seminole
Service Area: Konawa
*Tillman
Tulsa
Service Area: North Tulsa

DENTAL: Oklahoma
Service Area Listing

Service Area Name

Konawa
County—Pottawatomie
Parts:
Maud Division
Wanette-Asher Division
County—Seminole
Parts:
Konawa Division
Seminole South Division
North Tulsa
County—Tulsa

DENTAL: Oklahoma
Service Area Listing

Service Area Name

Parts:
C.T. 2–10
C.T. 12–14
C.T. 22–23
C.T. 25–26
C.T. 57
C.T. 62
C.T. 79
C.T. 80.01–80.02
C.T. 91.01–91.02
Northeast Oklahoma City
County—Oklahoma
Parts:
C.T. 1080.03
C.T. 1080.05
C.T. 1080.10–1080.11
C.T. 1081.01
C.T. 1088.01–1088.04
C.T. 1089–1090
Talihina
County—Le Flore
Parts:
South Le Flore Division
Talihina Division
County—Pushmataha
Parts:
North Pushmataha Division

DENTAL: Oklahoma
Population Group Listing

Population Group

Low Inc—SE Oklahoma City
County—Oklahoma
Parts:
Low-Income

DENTAL: Oklahoma
Facility Listing

Facility Name

FCI El Reno
County—Canadian

DENTAL: Oregon
County Listing

County Name

Clackamas
Population Group: Low Inc/MFW/Homeless—Clackamas Co
*Gilliam
*Harney
Population Group: Low Inc—Harney Co
*Hood River
Population Group: Low Inc/MFW—Hood River Co
Jackson
Population Group: Low-Inc/MFW—Jackson Co
*Josephine
Population Group: Low Income—Josephine County
*Klamath
Population Group: Low Inc/MFW/Homeless—Klamath Co
Lane
Population Group: Low Inc—Lane Co
*Malheur
Population Group: Low Inc/MFW—Malheur Co
Facility: Snake River Correct Inst

DENTAL: Oregon
County Listing

County Name

Marion
Population Group: Low Inc/MFW/Homeless—Polk And Marion C
*Morrow
Multnomah
Population Group: Low Inc—Inner NE Multnomah Co
Population Group: Low Inc—Southeast Multnoma County
Population Group: Low Inc—Mid-County Multnomah
Polk
Population Group: Low Inc/MFW/Homeless—Polk And Marion C
*Sherman
*Tillamook
*Umatilla
Population Group: Low Inc/MFW—Umatilla Co
*Wasco
Population Group: Low Inc/MFW—Wasco Co
Washington
Population Group: Low Inc/MFW—Western Washington Co
*Wheeler
Yamhill
Population Group: Low Inc—Yamhill
Facility: FCI Sheridan

DENTAL: Oregon
Population Group Listing

Population Group

Low Inc—Harney Co
County—Harney
Low Inc—Inner NE Multnomah Co
County—Multnomah
Parts:
C.T 27.02
C.T. 22.01–22.02
C.T. 23.01–23.02
C.T. 24.01–4.02
C.T. 25.01–25.02
C.T. 26
C.T. 27.01–27.02
C.T. 28.01–28.02
C.T. 29.01–29.02
C.T. 30–32
C.T. 33.01–33.02
C.T. 34.01–34.02
C.T. 35.01–35.02
C.T. 36.01–36.03
C.T. 37.01–37.02
C.T. 38.01–38.03
C.T. 39.01–39.02
C.T. 40.01–40.02
C.T. 41.01–41.02
C.T. 72.01–72.02
C.T. 73–76
Low Inc—Lane Co
County—Lane
Parts:
Low Income
Low Inc—Mid-County Multnomah
County—Multnomah
Parts:
C.T. 6.01–6.02
C.T. 16.02
C.T. 17.02
C.T. 29.03
C.T. 77–79

DENTAL: Oregon
Population Group Listing

Population Group

C.T. 80.01–80.02
C.T. 92.01–92.02
C.T. 93–95
C.T. 97.01
81
82.01
82.02
83.01
83.02
84
85
89
90
91
Low Inc—Southeast Multnoma County
County—Multnomah
Parts:
C.T. 1–2
C.T. 3.01–3.02
C.T. 4.01–4.02
C.T. 5.01–5.02
C.T. 7.01–7.02
C.T. 8.01–8.02
C.T. 9.01–9.02
C.T. 10
C.T. 11.01–11.02
C.T. 12.01–12.02
C.T. 13.01–13.02
C.T. 14–15
C.T. 16.01
C.T. 17.01
C.T. 18.01–18.02
C.T. 19–21
C.T. 86–88
Low Inc—Yamhill
County—Yamhill
Parts:
Low Income/MFW
Low Inc/MFW—Hood River Co
County—Hood River
Parts:
Low Income
MFW
Low Inc/MFW—Malheur Co
County—Malheur
Parts:
Low Inc/MFW
Low Inc/MFW—Umatilla Co
County—Umatilla
Parts:
Low Income
Migrant Farmworker
Low Inc/MFW—Wasco Co
County—Wasco
Parts:
Low Income
MFW
Low Inc/MFW—Western Washington Co
County—Washington
Parts:
Chehalem Mountain Div
Coast Range Div
Forest Grove-Cornelius
North Plains Div
Low Inc/MFW/Homeless —Clackamas Co
County—Clackamas
Parts:
Low Inc/Homeless
MFW
Low Inc/MFW/Homeless—Klamath Co
County—Klamath
Parts:

DENTAL: Oregon
Population Group Listing

Population Group

Low Income/MFW/Homeless
Low Inc/MFW/Homeless—Polk And Marion C
County—Marion
Parts:
Low Inc/MFW/Homeless
County—Polk
Parts:
Low Inc/MFW/Homeless
Low Income—Josephine County
County—Josephine
Parts:
Low-Income
Low-Inc/MFW—Jackson Co
County—Jackson
Parts:
Low Inc/MFW—Jackson Co

DENTAL: Oregon
Facility Listing

Facility Name

FCI Sheridan
County—Yamhill
Snake River Correct Inst
County—Malheur

DENTAL: Pennsylvania
County Listing

County Name

Allegheny
Service Area: Homewood-Brushton
Service Area: North Braddock
Service Area: South Braddock
Service Area: Wilkinsburg
Population Group: Low Inc—East End Pittsburgh
*Armstrong
Population Group: Low Inc—Kittanning
Population Group: Low Inc—Armstrong/Clarion
Beaver
Population Group: Low Inc—Beaver Co
*Bedford
Population Group: Low Inc—Bedford Co
Butler
Population Group: Low-Inc Pop Of Butler Co
Cambria
Service Area: Coalport
Population Group: Low Inc—Greater Johnstown
*Cameron
*Clarion
Population Group: Low Inc—Armstrong/Clarion
*Clearfield
Service Area: Coalport
Columbia
Population Group: Low Income—Bloomsburg
*Crawford
Population Group: Low Inc—Titusville
Population Group: Low Inc—Meadville/Conneautville
Population Group: Low Inc—Greenville
Dauphin
Population Group: Low Inc—Harrisburg
*Elk
Service Area: Marienville Service Area
Population Group: Low Inc—St Mary's
Erie

DENTAL: Pennsylvania
County Listing

County Name

Population Group: Low Inc—Erie City
Fayette
Population Group: Low Inc—Greensboro
Population Group: Low Inc—Uniontown
*Forest
Service Area: Marienville Service Area
Population Group: Low Inc—Titusville
*Franklin
Population Group: Low Inc/MFW—Chambersburg
*Fulton
Population Group: Low Inc.—Fulton County
*Greene
Population Group: Low Inc—Greensboro
*Huntingdon
Population Group: Low Inc—Huntingdon Co
*Jefferson
Population Group: Low Inc—Jefferson County
*Juniata
Population Group: Low Inc—Juniata
Lackawanna
Population Group: Low Income—City Of Scranton
Lancaster
Service Area: SE Lancaster City
Population Group: Low Inc—Welsh Mountain
Lycoming
Population Group: Low Inc—Williamsport
*McKean
Service Area: Coudersport
Population Group: Low Income—Western Mckean Co
Facility: FCI Mckean
Mercer
Population Group: Low Inc—Sharon/Farrell
Population Group: Low Inc—Greenville
*Mifflin
Population Group: Low Inc—Mifflin Co
*Montour
Population Group: Low Income—Bloomsburg
Northampton
Population Group: Low Inc—South Side Bethlehem
*Northumberland
Population Group: Low Inc Northumberland
Philadelphia
Population Group: Low Inc—NE Philadelphia
Population Group: Low Inc—Lower North Philadelphia
*Pike
Population Group: Low Inc—Pike County
*Potter
*Potter
Service Area: Coudersport
Service Area: Coudersport
*Schuylkill
Population Group: Low Inc—Schuylkill
Facility: FCI—Schuylkill
*Tioga
Population Group: Low-Income Tioga County
*Union
Facility: FCI Allenwood
Facility: USP—Lewisburg
Facility: USP Allenwood
*Venango

DENTAL: Pennsylvania
County Listing

County Name

Population Group: Low Inc—Titusville
*Warren
Service Area: Marienville Service Area
Population Group: Low Inc—Titusville
*Wayne
Population Group: Low Inc—Wayne Co.
York
Population Group: Low Inc—York City

DENTAL: Pennsylvania
Service Area Listing

Service Area Name

Coalport
County—Cambria
Parts:
Reade Township
White Township
County—Clearfield
Parts:
Beccaria Township
Bigler Township
Coalport Borough
Glen Hope Borough
Gulich Township
Irvona Borough
Jordan Township
Ramey Borough
Coudersport
County—McKean
Parts:
Annin Township
Ceres Township
Keating Township
Liberty Township
Norwich Township
Port Allegany Borough
Sergeant Township
Smethport Borough
County—Potter
County—Potter
Homewood-Brushton
County—Allegheny
Parts:
C.T. 1204
C.T. 1207
C.T. 1301–1305
C.T. 1305
Marienville Service Area
County—Elk
Parts:
Highland Township
Millstone Township
Spring Creek Township
County—Forest
Parts:
Barnett Township
Green Township
Hickory Township
Howe Township
Jenks Township
Kingsley Township
County—Warren
Parts:
Cherry Grove Township
Limestone Township
Sheffield Township
Watson Township
North Braddock
County—Allegheny
Parts:
C.T. 5041

DENTAL: Pennsylvania
Service Area Listing

Service Area Name

C.T. 5100
C.T. 5120
C.T. 5128–5129
C.T. 5138
C.T. 5140
South Braddock
County—Allegheny
Parts:
C.T. 4824
C.T. 4838
C.T. 4843
C.T. 4850
C.T. 4867–4869
C.T. 4882
SE Lancaster City
County—Lancaster
Parts:
C.T. 1
C.T. 7–9
C.T. 14–16
Wilkinsburg
County—Allegheny
Parts:
Wilkinsburg Borough

DENTAL: Pennsylvania
Population Group Listing

Population Group

Low Inc—Armstrong/Clarion
County—Armstrong
Parts:
Brady's Bend Twp
Hovey Twp
Madison Twp
Mahoning Twp
Parker City
Perry Twp
Pine Twp
Redbank Twp
S.Bethlehem Boro
Sugarcreek Twp
Washington Twp
County—Clarion
Parts:
Brady Twp
Callensburg Boro
East Brady Boro
Hawthorn Boro
Licking Twp
Limestone Twp
Madison Twp
Monroe Twp
New Bethlehem Boro
Perry Twp
Piney Twp
Porter Twp
Redbank Twp
Rimersburg Boro
Sligo Boro
Toby Twp
Low Inc—Beaver Co
County—Beaver
Parts:
Low Income
Low Inc—Bedford Co
County—Bedford
Parts:
Low Income
Low Inc—East End Pittsburgh
County—Allegheny
Parts:

DENTAL: Pennsylvania
Population Group Listing

Population Group

C.T. 818
C.T. 1016–1017
C.T. 1113–1115
C.T. 1201–1204
C.T. 1208
Low Inc—Erie City
County—Erie
Parts:
C.T. 1–8
C.T. 10–16
C.T. 16–30
Low Inc—Greater Johnstown
County—Cambria
Parts:
C.T. 1–14
C.T. 101–114
Low Inc—Greensboro
County—Fayette
Parts:
German Twp
Masontown Boro
Nicholson Twp
Point Marion Boro
Springhill Twp
County—Greene
Parts:
Low Income
Low Inc—Greenville
County—Crawford
Parts:
East Fallowfield Twp
Greenwood Twp
N.Shenango Twp
S.Shenango Twp
W.Fallowfield Twp
W.Shenango Twp
County—Mercer
Parts:
Deer Creek Twp
Delaware Twp
Fredonia Boro
French Creek Twp
Greene Twp
Greenville Boro
Hempfield Twp
Jamestown Boro
Mill Creek Twp
New Lebanon Boroa
New Vernon Twp
Otter Creek Twp
Perry Twp
Pymatuning Twp
S.Pymatuning Twp
Salem Twp
Sandy Creek Twp
Sandy Lake Boro
Sandy Lake Twp
Sheakleyville Boro
Stoneboro Boro
Sugar Grove Twp
W.Salem Twp
Low Inc—Harrisburg
County—Dauphin
Parts:
C.T. 201–217
Low Inc—Huntingdon Co
County—Huntingdon
Parts:
Low Income
Low Inc—Jefferson County
County—Jefferson
Parts:

DENTAL: Pennsylvania
Population Group Listing

Population Group

Low Income
Low Inc—Juniata
County—Juniata
Parts:
Low Income
Low Inc—Kittanning
County—Armstrong
Parts:
Apollo Boro
Applewood Boro
Atwood Boro
Bethel Twp
Boggs Twp
Burrell Twp
Cadogan Twp
Cowanshannock Twp
Dayton Boro
E.Franklin Twp
Elderton Boro
Ford City Boro
Ford Cliff Boro
Freeport Boro
Gilpin Twp
Kiskiminetas Twp
Kittanning Boro
Kittanning Twp
Leechburg Boro
Manor Twp
Manorville Boro
N.Apollo Boro
N.Buffalo Twp
Parks Twp
Plumcreek Twp
Rayburn Twp
Rural Valley Boro
S.Bend Twp
S.Bethlehem Boro
S.Buffalo Twp
Valley Twp
W. Franklin Twp
W.Kittanning Boro
Wayne Twp
Worthington Boro
Low Inc—Lower North Philadelphia
County—Philadelphia
Parts:
C.T. 125–181
C.T. 192
C.T. 194–205
C.T. 280
C.T. 283–287
Low Inc—Meadville/Conneautville
County—Crawford
Parts:
Beaver Twp
Conneaut Twp
Conneaut Lake Boro
Conneautville Boro
Cussewago Twp
Hayfield Twp
Meadville City
Pine Twp
Sadsbury Twp
Saegertown Boro
Spring Twp
Springboro Boro
Summerhill Twp
Summit Twp
Union Twp
Vernon Twp
West Mead Twp
Low Inc—Mifflin Co

DENTAL: Pennsylvania
Population Group Listing

Population Group

County—Mifflin
Parts:
Low Income
Low Inc—NE Philadelphia
County—Philadelphia
Parts:
C.T. 182–185
C.T. 189–191
C.T. 193
C.T. 288–328
Low Inc—Pike County
County—Pike
Parts:
Pike County
Low Inc—Schuylkill
County—Schuylkill
Parts:
Low Income
Low Inc—Sharon/Farrell
County—Mercer
Parts:
C.T. 301–309
Low Inc—South Side Bethlehem
County—Northampton
Parts:
C.T. 105–106
C.T. 109–113
Low Inc—St Mary's
County—Elk
Parts:
Benezette Twp
Benzinger Twp
Fox Twp
Horton Twp
Jay Twp
Johnsonburg Boro
Jones Twp
Ridgway Boro
Ridgway Twp
St. Marys Boro
Low Inc—Titusville
County—Crawford
Parts:
Centerville Borough
Hydetown Borough
Oil Creek Borough
Rome Township
Sparta Township
Spartansburg Borough
Steuben Township
Titusville City
Townville Borough
Troy Township
County—Forest
Parts:
Harmony Township
Tionesta Borough
Tionesta Township
County—Venango
Parts:
Allegheny Township
Cherrytree Township
Cooperstown Borough
Cornplanter Township
Jackson Township
Oakland Township
Oilcreek Township
Pleasantville Borough
Plum Township
Rouseville Borough
County—Warren
Parts:

DENTAL: Pennsylvania
Population Group Listing

Population Group

Deerfield Township
Eldred Township
Southwest Township
Tidioute Borough
Triumph Township
Low Inc—Uniontown
County—Fayette
Parts:
Belle Vernon Borough
Brownsville Borough
Brownsville Township
Bullskin Township
Connellsville City
Connellsville Township
Dawson Borough
Dunbar Borough
Everson Borough
Fairchance Borough
Fayette City Borough
Franklin Township
Georges Township
Henry Clay Township
Jefferson Township
Lower Tyrone Township
Luzern Township
Markleysburg Borough
Menallen Township
Newell Borough
North Union Township
Perry Township
Perryopolis Borough
Redstone Township
Saltlick Township
Smithfield Borough
South Connellsville Boro
South Union Township
Springfield Township
Stewart Township
Uniontown City
Upper Tyrone Township
Vanderbilt Borough
Washington Township
Wharton Township
Low Inc—Wayne Co.
County—Wayne
Parts:
Low Income
Low Inc—Welsh Mountain
County—Lancaster
Parts:
Bart Township
Brecknock Township
Caernarvon Township
Christiana Borough
Colerain Township
Earl Township
East Earl Township
Eden Township
Leacock Township
Little Britain Township
New Holland Borough
Paradise Township
Quarryville Borough
Sadsbury Township
Salisbury Township
Terre Hill Borough
Low Inc—Williamsport
County—Lycoming
Parts:
Armstrong Twp
Brady Twp
Clinton Twp

DENTAL: Pennsylvania
Population Group Listing

Population Group

Duboistown Boro
Elred Twp
Fairfield Twp
Franklin Twp
Hepburn Twp
Hughesville Boro
Jordan Twp
Loyalsock Twp
Montgomery Boro
Montoursville Boro
Moreland Twp
Muncy Boro
Muncy Creek Twp
Muncy Twp
Penn Twp
Picture Rocks Boro
S. Williamsport Boro
Shrewsbury Twp
Upper Fairfield Twp
Williamsport City
Wolf Twp
Low Inc—York City
County—York
Parts:
C.T. 1–3
C.T. 5–7
C.T. 9–12
C.T. 15–16
Low Inc Northumberland
County—Northumberland
Parts:
Low Income
Low Inc.—Fulton County
County—Fulton
Parts:
Low Income
Low Inc/MFW—Chambersburg
County—Franklin
Parts:
Chambersburg Boro
Hamilton Twp
Letterkenny Twp
St. Thomas Twp
Low Income—Bloomsburg
County—Columbia
Parts:
Low Income
County—Montour
Parts:
Low Income
Low Income—City Of Scranton
County—Lackawanna
Parts:
Low Income
Low Income—Western Mckean Co
County—McKean
Parts:
Bradford City
Bradford Twp
Corydon Twp
Eldred Boro
Eldred Twp
Foster Twp
Hamilton Twp
Hamlin Twp
Kane Boro
Lafayette Twp
Lewis Run Boro
Mt Jewett Boro
Otto Twp
Wetmore Twp
Low-Inc Pop Of Butler Co

DENTAL: Pennsylvania
Population Group Listing

Population Group

County—Butler
Parts:
Allegheny Twp
Brady Twp
Bruin Boro
Butler City
Butler Twp
Center Twp
Cherry Twp
Cherry Valley Boro
Chicora Boro
Clay Twp
Clearfield Twp
Concord Twp
Connequenessing Boro
Connoquenessing Twp
Donegal Twp
East Butler Boro
Eau Claire Boro
Fairview Boro
Fairview Twp
Franklin Twp
Harrisville Boro
Karns City Boro
Lancaster Twp
Marion Twp
Mercer Twp
Muddy Creek Twp
Oakland Twp
Parker Twp
Petrolia Boro
Portersville Boro
Prospect Boro
Slippery Rock Boro
Slippery Rock Twp
Summit Twp
Venango Twp
Washington Twp
West Liberty Boro
West Sunbury Boro
Worth Twp
Low-Income Tioga County
County—Tioga
Parts:
Low-Income

DENTAL: Pennsylvania
Facility Listing

Facility Name

FCI—Schuylkill
County—Schuylkill
FCI Allenwood
County—Union
FCI Mckean
County—McKean
USP—Lewisburg
County—Union
USP Allenwood
County—Union

DENTAL: Rhode Island
County Listing

County Name

Newport
Population Group: Newport/Middletown Low Income
Providence
Population Group: Low Inc—NW Woonsocket
Population Group: Low Inc—Providence City

DENTAL: Rhode Island
County Listing

County Name

Population Group: Low Inc—C Falls/N Pawtucket
Washington
Population Group: Narranganset Indian Tribe
Facility: Health Center Of South County
Facility: Wood River Health Services

DENTAL: Rhode Island
Population Group Listing

Population Group

Low Inc—C Falls/N Pawtucket
County—Providence
Parts:
C.T. 109–111
C.T. 149–161
C.T. 163–166
C.T. 167.97–167.98
C.T. 168–170
C.T. 170–171
Low Inc—NW Woonsocket
County—Providence
Parts:
Burrillville Town
Foster Town
Glocester Town
North Smithfield Town
Woonsocket City
Low Inc—Providence City
County—Providence
Parts:
C.T. 1–9
C.T. 9–34
C.T. 36–37
Narranganset Indian Tribe
County—Washington
Parts:
Charlestown Town
Newport/Middletown Low Income
County—Newport
Parts:
C.T. 402
C.T. 403.03
C.T. 405–408
C.T. 410
C.T. 412

DENTAL: Rhode Island
Facility Listing

Facility Name

Health Center Of South County
County—Washington
Wood River Health Services
County—Washington

DENTAL: South Carolina
County Listing

County Name

*Abbeville
Population Group: Low Inc—Abbeville/Greenwood/Mccormick
Aiken
Population Group: Low Inc—Aiken
*Allendale
Population Group: Low Inc—Allendale/Hampton
Anderson
Population Group: Low Inc—Anderson
*Bamberg

DENTAL: South Carolina
County Listing

County Name

Population Group: Low Inc—Bamberg/Calhoun/Orangeburg
*Barnwell
Population Group: Low Inc—Barwell
*Beaufort
Population Group: Low Inc—Beaufort
Berkeley
Population Group: Low Inc—Berkeley
*Calhoun
Population Group: Low Inc—Bamberg/Calhoun/Orangeburg
Charleston
Population Group: Low Inc—Charleston/Dorchester
Cherokee
*Chester
Population Group: Low Inc—Chester/York
*Chesterfield
Population Group: Low Inc—Chesterfield
*Clarendon
*Colleton
*Darlington
Population Group: Low Inc—Darlington
*Dillon
Service Area: Dillon/Marion
Dorchester
Population Group: Low Inc—Charleston/Dorchester
Edgefield
Population Group: Low Inc—Edgefield
*Fairfield
Population Group: Low Inc—Fairfield
Florence
Population Group: Low Inc—Florence
*Georgetown
Population Group: Low Inc—Georgetown
*Greenwood
Population Group: Low Inc—Abbeville/Greenwood/Mccormick
*Hampton
Population Group: Low Inc—Allendale/Hampton
Facility: FCI Estill
Horry
Population Group: Low Inc—Horry
*Jasper
Population Group: Low Inc—Jasper
Facility: Ridgeland Ci
*Kershaw
Population Group: Low Inc—Kershaw
*Lancaster
Population Group: Low Inc—Lancaster
*Laurens
*Lee
*Marion
Service Area: Dillon/Marion
*Marlboro
Population Group: Low Inc—Marlboro
*McCormick
Population Group: Low Inc—Abbeville/Greenwood/Mccormick
*Oconee
Population Group: Low Inc—Oconee
*Orangeburg
Population Group: Low Inc—Bamberg/Calhoun/Orangeburg
Pickens
Population Group: Low Inc—Pickens
Spartanburg
Population Group: Low Inc—Spartanburg
Sumter
*Union

DENTAL: South Carolina
County Listing

County Name

Population Group: Low Inc—Union
*Williamsburg
York
Population Group: Low Inc—Chester/York

DENTAL: South Carolina
Service Area Listing

Service Area Name

Dillon/Marion
County—Dillon
County—Marion

DENTAL: South Carolina
Population Group Listing

Population Group

Low Inc—Abbeville/Greenwood/Mccormick
County—Abbeville
Parts:
Low Income
County—Greenwood
Parts:
Low Income
County—McCormick
Parts:
Low Income
Low Inc—Aiken
County—Aiken
Parts:
Low Income
Low Inc—Allendale/Hampton
County—Allendale
Parts:
Low Income
County—Hampton
Parts:
Low Income
Low Inc—Anderson
County—Anderson
Parts:
Low Income
Low Inc—Bamberg/Calhoun/Orangeburg
County—Bamberg
Parts:
Low Income
County—Calhoun
Parts:
Low Income
County—Orangeburg
Parts:
Low Income
Low Inc—Barwell
County—Barnwell
Parts:
Low Income
Low Inc—Beaufort
County—Beaufort
Parts:
Low Income
Low Inc—Berkeley
County—Berkeley
Parts:
Low Income
Low Inc—Charleston/Dorchester
County—Charleston
Parts:
Low Income
County—Dorchester
Parts:
Low Income
Low Inc—Chester/York

DENTAL: South Carolina
Population Group Listing

Population Group

County—Chester
Parts:
Low Income
County—York
Parts:
Low Income
Low Inc—Chesterfield
County—Chesterfield
Parts:
Low Income
Low Inc—Darlington
County—Darlington
Parts:
Low Income
Low Inc—Edgefield
County—Edgefield
Parts:
Low Income
Low Inc—Fairfield
County—Fairfield
Parts:
Low Income
Low Inc—Florence
County—Florence
Parts:
Low Income
Low Inc—Georgetown
County—Georgetown
Parts:
Low Income
Low Inc—Horry
County—Horry
Parts:
Low Income
Low Inc—Jasper
County—Jasper
Parts:
Low Income
Low Inc—Kershaw
County—Kershaw
Parts:
Low Income
Low Inc—Lancaster
County—Lancaster
Parts:
Low Income
Low Inc—Marlboro
County—Marlboro
Parts:
Low Income
Low Inc—Oconee
County—Oconee
Parts:
Low Income
Low Inc—Pickens
County—Pickens
Parts:
Low Income
Low Inc—Spartanburg
County—Spartanburg
Parts:
Low Income
Low Inc—Union
County—Union
Parts:
Low Income

DENTAL: South Carolina
Facility Listing

Facility Name

FCI Estill

DENTAL: South Carolina
Facility Listing

Facility Name

County—Hampton
Ridgeland Ci
County—Jasper

DENTAL: South Dakota
County Listing

County Name

*Bennett
*Corson
*Dewey
*Gregory
*Harding
*Lyman
*McCook
*Meade
Service Area: Faith
Minnehaha
Population Group: Low Inc—Central Sioux Falls
*Perkins
*Roberts
*Shannon
Population Group: Low Income—Shannon
*Todd
*Turner
*Ziebach

DENTAL: South Dakota
Service Area Listing

Service Area Name

Faith
County—Meade
Parts:
Eagle Township
Faith City
Howard Township
North Meade Unorg.
Union Township
Upper Red Owl Township

DENTAL: South Dakota
Population Group Listing

Population Group

Low Inc—Central Sioux Falls
County—Minnehaha
Parts:
C.T. 1–2
C.T. 7–9
Low Income—Shannon
County—Shannon
Parts:
Low Income

DENTAL: Tennessee
County Listing

County Name

Anderson
Population Group: Low Inc—Anderson Co
*Bedford
Population Group: Low Inc—Bedford
*Benton
Population Group: Low Inc—Benton Co
*Bledsoe
Blount
Population Group: Low Inc—Blount Co
*Bradley
Population Group: Low Inc—Bradley Co
*Campbell

DENTAL: Tennessee
County Listing

County Name

*Carroll
Population Group: Low Inc—Carroll Co
Carter
Population Group: Low Inc—Carter Co
Cheatham
Population Group: Low Inc—Cheatham
*Chester
Population Group: Low Inc—Chester Co
*Claiborne
*Clay
Population Group: Low Inc—Clay
*Cocke
Population Group: Low Inc—Cocke
*Coffee
Population Group: Low Inc—Coffee Co
*Crockett
Population Group: Low Inc—Crockett Co
*Cumberland
Population Group: Low Inc—Cumberland
Davidson
Population Group: Low Inc—E Nashville
Population Group: Low Inc Pop—Waverly-Belmont
Population Group: Low Inc/Homeless—N Nashville
*De Kalb
Population Group: Low Inc—Dekalb
*Decatur
Population Group: Low Inc—Decatur Co
Dickson
Population Group: Low Inc—Dickson
*Dyer
Population Group: Low Inc—Dyer Co
Fayette
Population Group: Low Income—Fayette County
*Fentress
Population Group: Low Inc—Fentress
*Franklin
Population Group: Low Inc—Franklin Co
*Gibson
Population Group: Low Inc—Gibson Co
*Giles
Population Group: Low Inc—Giles Co
Grainger
*Greene
Population Group: Low Inc—Greene Co
*Grundy
*Hamblen
Population Group: Low Inc—Hamblen Co
Hamilton
Population Group: Low Inc—Central Chattanooga
Facility: Woods Clinic
*Hancock
*Hardeman
Population Group: Low Inc—Hardeman Co
*Hardin
Population Group: Low Inc—Hardin Co
Hawkins
Population Group: Low Inc—Hawkins Co
*Haywood
Population Group: Low Inc—Haywood
*Henderson
Population Group: Low Inc—Henderson Co
*Henry
Population Group: Low Inc—Henry Co
*Hickman
Population Group: Low Inc—Hickman Co
*Houston
Population Group: Low Inc—Houston
*Humphreys

DENTAL: Tennessee
County Listing

County Name

Population Group: Low Inc—Humphreys
*Jackson
Population Group: Low Inc—Jackson Co
Jefferson
Population Group: Low Inc—Jefferson Co
*Johnson
Knox
Population Group: Low Inc—Knoxville
*Lake
*Lauderdale
Population Group: Low Inc—Lauderdale Co
*Lawrence
Population Group: Low Inc—Lawrence Co
*Lewis
Population Group: Low Inc—Lewis Co
*Lincoln
Population Group: Low Inc—Lincoln Co
Loudon
Population Group: Low Inc—Loudon Co
*Macon
Madison
Population Group: Low Inc—Madison Co
Marion
Population Group: Low Inc—Marion Co
*Marshall
Population Group: Low Inc—Marshall Co
*Maury
Population Group: Low Inc—Maury Co
*McMinn
Population Group: Low Inc—Mcminn Co
*McNairy
Population Group: Low Inc—Mcnairy Co
*Meigs
*Monroe
Population Group: Low Inc—Monroe Co
Montgomery
Population Group: Low Inc—Montgomery
*Moore
Population Group: Low Inc—Moore Co
*Morgan
*Obion
Population Group: Low Inc—Obion Co
*Overton
Population Group: Low Inc—Overton
*Perry
Population Group: Low Inc—Perry Co
*Pickett
*Polk
Population Group: Low Inc—Polk Co
*Putnam
Population Group: Low Inc—Putnam
*Rhea
Population Group: Low Inc—Rhea Co
*Roane
Population Group: Low Inc—Roane Co
Robertson
Population Group: Low Inc—Robertson
*Scott
Population Group: Low Income—Scott Co
*Sequatchie
Population Group: Low Inc—Sequatchie Co
Sevier
Population Group: Low Inc—Sevier Co
Shelby
Population Group: Low Inc—Shelby
Facility: FCI Memphis
*Smith
Population Group: Low Inc—Smith
*Stewart
Population Group: Low Inc—Stewart

DENTAL: Tennessee
County Listing

County Name

Sumner
Population Group: Low Inc—Highland Ridge
Tipton
Population Group: Low Inc—Tipton Co
*Trousdale
Population Group: Low Inc—Trousdale
Unicoi
Population Group: Low Inc—Unicoi Co
Union
*Van Buren
Population Group: Low Inc—Van Buren
*Warren
Population Group: Low Inc—Warren
Washington
Population Group: Low Inc—Washington Co
*Weakley
Population Group: Low Inc—Weakley Co
*White
Population Group: Low Inc—White

DENTAL: Tennessee
Population Group Listing

Population Group

Low Inc—Anderson Co
County—Anderson
Parts:
Low Income
Low Inc—Bedford
County—Bedford
Parts:
Low Income
Low Inc—Benton Co
County—Benton
Parts:
Low Income
Low Inc—Blount Co
County—Blount
Parts:
Low Income
Low Inc—Bradley Co
County—Bradley
Parts:
Low Inc Pop
Low Inc—Carroll Co
County—Carroll
Parts:
Low Income
Low Inc—Carter Co
County—Carter
Parts:
Low Income
Low Inc—Central Chattanooga
County—Hamilton
Parts:
C.T. 1–8
C.T. 10–16
C.T. 18–21
C.T. 23–27
C.T. 31
C.T. 115
Low Inc—Cheatham
County—Cheatham
Parts:
Low Income
Low Inc—Chester Co
County—Chester
Parts:
Low Income
Low Inc—Clay

DENTAL: Tennessee
Population Group Listing

Population Group

County—Clay
Parts:
Low Income
Low Inc—Cocke
County—Cocke
Parts:
Low Income
Low Inc—Coffee Co
County—Coffee
Parts:
Low Income
Low Inc—Crockett Co
County—Crockett
Parts:
Low Income
Low Inc—Cumberland
County—Cumberland
Parts:
Low Income
Low Inc—Decatur Co
County—Decatur
Parts:
Low Income
Low Inc—Dekalb
County—De Kalb
Parts:
Low Income
Low Inc—Dickson
County—Dickson
Parts:
Low Income
Low Inc—Dyer Co
County—Dyer
Parts:
Low Income
Low Inc—E Nashville
County—Davidson
Parts:
C.T. 112–129
Low Inc—Fentress
County—Fentress
Low Inc—Franklin Co
County—Franklin
Parts:
Low Income
Low Inc—Gibson Co
County—Gibson
Parts:
Low Income
Low Inc—Giles Co
County—Giles
Parts:
Low Income
Low Inc—Greene Co
County—Greene
Parts:
Low Income
Low Inc—Hamblen Co
County—Hamblen
Parts:
Low Income
Low Inc—Hardeman Co
County—Hardeman
Parts:
Low Income
Low Inc—Hardin Co
County—Hardin
Parts:
Hardin
Low Inc—Hawkins Co
County—Hawkins
Parts:

DENTAL: Tennessee
Population Group Listing

Population Group

Low Income
Low Inc—Haywood
County—Haywood
Low Inc—Henderson Co
County—Henderson
Parts:
Low Income
Low Inc—Henry Co
County—Henry
Parts:
Low Income
Low Inc—Hickman Co
County—Hickman
Parts:
Low Income
Low Inc—Highland Ridge
County—Sumner
Parts:
Portland CCD
Westmoreland CCD
Whitehouse CCD
Low Inc—Houston
County—Houston
Parts:
Low Income
Low Inc—Humphreys
County—Humphreys
Parts:
Low Income
Low Inc—Jackson Co
County—Jackson
Parts:
Low Income
Low Inc—Jefferson Co
County—Jefferson
Parts:
Low Income
Low Inc—Knoxville
County—Knox
Parts:
C.T. 1–17
C.T. 19–20
C.T. 24
C.T. 26–28
Low Inc—Lauderdale Co
County—Lauderdale
Parts:
Low Income
Low Inc—Lawrence Co
County—Lawrence
Parts:
Low Income
Low Inc—Lewis Co
County—Lewis
Parts:
Low Income
Low Inc—Lincoln Co
County—Lincoln
Parts:
Low Income
Low Inc—Loudon Co
County—Loudon
Parts:
Low Income
Low Inc—Madison Co
County—Madison
Parts:
Low Income
Low Inc—Marion Co
County—Marion
Parts:
Low Income

DENTAL: Tennessee
Population Group Listing

Population Group

Low Inc—Marshall Co
County—Marshall
Parts:
Low Income
Low Inc—Maury Co
County—Maury
Parts:
Low Income
Low Inc—Mcminn Co
County—McMinn
Parts:
Low Income
Low Inc—Mcnairy Co
County—McNairy
Parts:
Low Income
Low Inc—Monroe Co
County—Monroe
Parts:
Low Income
Low Inc—Montgomery
County—Montgomery
Parts:
Low Income
Low Inc—Moore Co
County—Moore
Parts:
Low Income
Low Inc—Obion Co
County—Obion
Parts:
Low Income
Low Inc—Overton
County—Overton
Parts:
Low Income
Low Inc—Perry Co
County—Perry
Parts:
Low Income
Low Inc—Polk Co
County—Polk
Parts:
Low Income
Low Inc—Putnam
County—Putnam
Parts:
Low Income
Low Inc—Rhea Co
County—Rhea
Parts:
Low Income
Low Inc—Roane Co
County—Roane
Parts:
Low Income
Low Inc—Robertson
County—Robertson
Parts:
Low Income
Low Inc—Sequatchie Co
County—Sequatchie
Parts:
Low Income
Low Inc—Sevier Co
County—Sevier
Parts:
Low Income
Low Inc—Shelby
County—Shelby
Parts:
Low Income

DENTAL: Tennessee
Population Group Listing

Population Group

Low Inc—Smith
County—Smith
Parts:
Low Income
Low Inc—Stewart
County—Stewart
Parts:
Low Income
Low Inc—Tipton Co
County—Tipton
Parts:
Low Income
Low Inc—Trousdale
County—Trousdale
Parts:
Low Income
Low Inc—Unicoi Co
County—Unicoi
Parts:
Low Income
Low Inc—Van Buren
County—Van Buren
Parts:
Low Income
Low Inc—Warren
County—Warren
Low Inc—Washington Co
County—Washington
Parts:
Low Income
Low Inc—Weakley Co
County—Weakley
Parts:
Low Income
Low Inc—White
County—White
Parts:
Low Income
Low Inc Pop—Waverly-Belmont
County—Davidson
Parts:
C.T. 161–163
C.T. 170–171
Low Inc/Homeless—N Nashville
County—Davidson
Parts:
C.T. 133
C.T. 135–144
C.T. 146–148
Low Income—Fayette County
County—Fayette
Parts:
Low Income
Low Income—Scott Co
County—Scott
Parts:
Low Income

DENTAL: Tennessee
Facility Listing

Facility Name

FCI Memphis
County—Shelby
Woods Clinic
County—Hamilton

DENTAL: Texas
County Listing

County Name

*Anderson

DENTAL: Texas
County Listing

County Name

Facility: Beto Psn
Facility: Gurney Prison
*Aransas
Archer
*Armstrong
*Atascosa
Bastrop
*Bee (g)
Facility: McConnell Prsn
Bexar
Service Area: East Side (San Antonio)
Service Area: West Side (San Antonio)
Population Group: Low Inc—South Side (San Antonio)
*Borden
Bowie
Population Group: Low Inc—Comanche Co
*Briscoe
*Brooks
*Burleson
Caldwell
Cameron
*Carson
*Castro
*Cochran
*Coke
Coryell (g)
Facility: Mountain View Prison
*Crosby
*Culberson
Dallas
Service Area: Lisbon
Service Area: South Dallas
Facility: FCI Seagoville
*Dawson
*De Witt
*Dickens
*Dimmit
*Donley
*Duval
*Eastland
*Edwards
El Paso
Service Area: Southeast El Paso
*Frio
*Gaines
Galveston
Population Group: Low Inc—Galveston
*Glasscock
*Gonzales
Population Group: Low Inc—Gonzales Co
*Hale
*Hall
*Hansford
Hidalgo
*Hockley
Population Group: Low Inc—Hockley Co
*Hudspeth
Jefferson
Population Group: Low Inc—Jefferson Co
*Jim Hogg
*Jim Wells
*Kent
*King
*Kinney
*La Salle
Liberty
*Live Oak
Facility: FCI Three Rivers
*Loving
Lubbock
Service Area: East Lubbock

DENTAL: Texas
County Listing

County Name

*Maverick
*Medina
*Mitchell
*Motley
*Nacogdoches
  Population Group: Low Inc—Nacogdoches Co
*Newton
*Oldham
Orange
  Population Group: Low Inc—Orange Co
*Pecos
Potter
  Population Group: Low Inc—Potter/Randall
*Presidio
Randall
  Population Group: Low Inc—Potter/Randall
*Reeves
*Roberts
*Robertson
*San Jacinto
*Schleicher
*Shackelford
*Sherman
*Starr
*Sterling
*Stonewall
*Terrell
*Terry
*Throckmorton
Tom Green
  Population Group: Low Inc—Tom Green
Travis
  Service Area: Dove Springs
  Service Area: East Austin
  Service Area: South Austin
*Trinity
Upshur
*Uvalde
*Val Verde
*Ward
Webb
*Wharton
  Population Group: Low Inc—Wharton Co
Wichita
  Population Group: Low Income—Wichita Co
*Willacy
*Wise
*Yoakum
*Zapata
*Zavala

DENTAL: Texas
Service Area Listing

Service Area Name

Dove Springs
  County—Travis
    Parts:
      C.T. 24.11–24.13
East Austin
  County—Travis
    Parts:
      C.T. 4.02
      C.T. 8.01–8.04
      C.T. 9.01–9.02
      C.T. 10
      C.T. 18.11–18.12
      C.T. 21.04–21.13
      C.T. 22.01–22.02
      C.T. 22.05

DENTAL: Texas
Service Area Listing

Service Area Name

East Lubbock
  County—Lubbock
    Parts:
      C.T. 1
      C.T. 2.01–2.02
      C.T. 3.01–3.02
      C.T. 6.03–6.06
      C.T. 7–13
      C.T. 24–25
East Side (San Antonio)
  County—Bexar
    Parts:
      C.T. 1101–1104
      C.T. 1109–1110
      C.T. 1301–1306
      C.T. 1307.85
      C.T. 1308–1313
      C.T. 1401
Lisbon
  County—Dallas
    Parts:
      C.T. 56–57
      C.T. 59.01–59.02
      C.T. 87.01
      C.T. 87.03–87.05
      C.T. 88.01–88.02
South Austin
  County—Travis
    Parts:
      C.T. 23.04
      C.T. 23.10–23.12
      C.T. 24.16
South Dallas
  County—Dallas
    Parts:
      C.T. 25
      C.T. 27.01–27.02
      C.T. 28–29
      C.T. 33–38
      C.T. 39.01–39.02
      C.T. 40
      C.T. 93.03–93.04
      C.T. 115
      C.T. 116.01
Southeast El Paso
  County—El Paso
    Parts:
      C.T. 17–21
      C.T. 28–32
      C.T. 35–36
      C.T. 37.01–37.02
      C.T. 38.01–38.02
      C.T. 39.01–39.03
      C.T. 40.01–40.02
      C.T. 41.03–41.07
      C.T. 42.01–42.02
      C.T. 103.10
      C.T. 104.01–104.04
      C.T. 105
West Side (San Antonio)
  County—Bexar
    Parts:
      C.T. 1105–1108
      C.T. 1601–1606
      C.T. 1607.85
      C.T. 1616
      C.T. 1701–1716
      C.T. 1901–1902

DENTAL: Texas
Population Group Listing

Population Group

Low Inc—Jefferson Co 1
  County—Jefferson
    Parts:
      Low Income
Low Inc—Comanche Co
  County—Bowie
    Parts:
      Low Income
Low Inc—Galveston
  County—Galveston
    Parts:
      Low Income
Low Inc—Gonzales Co
  County—Gonzales
    Parts:
      Low Income
Low Inc—Hockley Co
  County—Hockley
    Parts:
      Low Income
Low Inc—Nacogdoches Co
  County—Nacogdoches
    Parts:
      Low Income
Low Inc—Orange Co
  County—Orange
    Parts:
      Low Income
Low Inc—Potter/Randall
  County—Potter
    Parts:
      Low Income
  County—Randall
    Parts:
      Low Income
Low Inc—South Side (San Antonio)
  County—Bexar
    Parts:
      C.T 1407.00
      C.T 1501.00
      C.T. 1402–1406
      C.T. 1408–1412
      C.T. 1416–1418
      C.T. 1502–1522
      C.T. 1609
      C.T. 1610.85
      C.T. 1611–1613
      C.T. 1615.01–1615.02
      C.T. 1618–1620
Low Inc—Tom Green
  County—Tom Green
    Parts:
      Tom Green
Low Inc—Wharton Co
  County—Wharton
    Parts:
      Low Income
Low Income—Wichita Co
  County—Wichita
    Parts:
      Low Income

DENTAL: Texas
Facility Listing

Facility Name

Beto Psn
  County—Anderson
FCI Seagoville
  County—Dallas
FCI Three Rivers
  County—Live Oak

DENTAL: Texas
Facility Listing

Facility Name

Gurney Prison
County—Anderson
McConnell Prsn
County—Bee
Mountain View Prison
County—Coryell

DENTAL: Utah
County Listing

County Name

*Beaver
Population Group: Low Inc—Beaver
*Box Elder
Population Group: Low Inc—Box Elder
*Cache
Population Group: Low Inc—Cache
*Carbon
Population Group: Low Income—Carbon County
*Daggett
Davis
Population Group: Low Inc—South Davis
Population Group: Low Inc—North Davis
*Duchesne
Population Group: Low Income—Duchesne Co
*Emery
Population Group: Low Income—Emery
*Garfield
*Grand
Population Group: Low Income—Grand County
*Iron
Population Group: Low Inc—Iron
*Juab
Population Group: Low Inc—Juab
*Kane
Population Group: Low Inc—Kane
*Millard
Population Group: Low Inc—Millard
*Morgan
Population Group: Low Income—Morgan County
*Piute
*Rich
Population Group: Low Income—Rich Co
Salt Lake
Population Group: Low Income—West Salt Lake
Facility: Utah St. Prison (Draper)
*San Juan
Population Group: Low Inc—San Juan Co
*Sanpete
Population Group: Low Inc—Sanpete
Facility: Central Utah Correctional Facility
*Sevier
Population Group: Low Inc—Sevier
*Summit
Service Area: Coalville/Kamas
*Tooele
Population Group: Low Inc—Tooele
*Uintah
Population Group: Low Income—Uintah Co
Utah
Population Group: Low Income—Utah Co
*Wasatch
Population Group: Low Inc—Wasatch
*Washington
Population Group: Low Inc—Washington
*Wayne
Population Group: Low Income—Wayne Co
Weber
Population Group: Low Inc—Weber

DENTAL: Utah
Service Area Listing

Service Area Name

Coalville/Kamas
County—Summit
Parts:
Coalville Division
Kamas Division

DENTAL: Utah
Population Group Listing

Population Group

Low Inc—Beaver
County—Beaver
Parts:
Low Income
Low Inc—Box Elder
County—Box Elder
Parts:
Low Income
Low Inc—Cache
County—Cache
Parts:
Low Income
Low Inc—Iron
County—Iron
Parts:
Low Income
Low Inc—Juab
County—Juab
Parts:
Low Income
Low Inc—Kane
County—Kane
Parts:
Low Income
Low Inc—Millard
County—Millard
Parts:
Low Income
Low Inc—North Davis
County—Davis
Parts:
C.T. 1252
C.T. 1253.01–1253.02
C.T. 1254.01–1254.02
C.T. 1255–1257
C.T. 1258.01–1258.02
C.T. 1259.03
C.T. 1260
C.T. 1261.04
Low Inc—San Juan Co
County—San Juan
Parts:
Low Income
Low Inc—Sanpete
County—Sanpete
Parts:
Low Income
Low Inc—Sevier
County—Sevier
Parts:
Low Income
Low Inc—South Davis
County—Davis
Parts:
C.T. 1266–1267
C.T. 1270.01–1270.02
Low Inc—Tooele
County—Tooele
Parts:
Low Income
Low Inc—Wasatch
County—Wasatch
Parts:
Low Income
Low Inc—Washington
County—Washington
Parts:
Low Income
Low Inc—Weber
County—Weber
Parts:
Low Income
Low Income—Carbon County
County—Carbon
Parts:
Low Income
Low Income—Duchesne Co
County—Duchesne
Parts:
Low Income
Low Income—Emery
County—Emery
Parts:
Low Income
Low Income—Grand County
County—Grand
Parts:
Low Income
Low Income—Rich Co
County—Rich
Parts:
Low Income
Low Income—Uintah Co
County—Uintah
Parts:
Low Income
Low Income—Utah Co
County—Utah
Parts:
Low Income
Low Income—Wayne Co
County—Wayne
Parts:
Low Income
Low Income—West Salt Lake
County—Salt Lake
Parts:
C.T. 1001
C.T. 1003.02–1003.04
C.T. 1004–1008
C.T. 1011–1012
C.T. 1014–1041
C.T. 1043
C.T. 1045–1049
C.T. 1103–1104
C.T. 1114–1118
C.T. 1121
C.T. 1122.01–1122.02
C.T. 1123.01–1123.02
C.T. 1124.01–1124.02
C.T. 1125.03
C.T. 1126.04–1126.05
C.T. 1126.10
C.T. 1127
C.T. 1128.01–1128.02
C.T. 1128.04–1128.05

DENTAL: Utah
Population Group Listing

Population Group

C.T. 1129.04–1129.11
C.T. 1130.03–1130.06
C.T. 1131
C.T. 1133.04–1133.08
C.T. 1134.02–1134.03
C.T. 1134.05–1134.09
C.T. 1135.05
C.T. 1135.09–1135.24
C.T. 1136–1137
Low Income—Morgan County
County—Morgan
Parts:
Low Income

DENTAL: Utah
Facility Listing

Facility Name

Central Utah Correctional Facility
County—Sanpete
Utah St. Prison (Draper)
County—Salt Lake

DENTAL: Vermont
County Listing

County Name

*Essex

DENTAL: Virginia
County Listing

County Name

*Accomack
Service Area: Accomack/Northampton
*Amelia
*Appomattox
*Bedford
Service Area: Bedford
*Bedford City
Service Area: Bedford
*Brunswick
*Buchanan
*Buckingham
Population Group: Low Income—Buckingham Co
*Charlotte
*Craig
*Dickenson
*Floyd
Greene
*Halifax/S. Boston
*King And Queen
Population Group: Low Income—King And Queen Co
King George
*Lee
*Louisa
*Lunenburg
*Nelson
Service Area: Lovingston
Newport News
Population Group: Low Inc—Newport News
*Northampton
Service Area: Accomack/Northampton
*Nottoway
*Patrick
Portsmouth City
Service Area: Low Inc—Downtown Portsmouth
*Prince Edward

DENTAL: Virginia
County Listing

County Name

Population Group: Low Inc—Prince Edward Co
*Rappahannock
Richmond City
Population Group: Homeless—Richmond City
Population Group: Low Inc East End Richmond
*Russell
Scott
Suffolk
Service Area: City Of Suffolk
*Surry
*Sussex
*Westmoreland
Population Group: Low Inc—Westmoreland Co

DENTAL: Virginia
Service Area Listing

Service Area Name

Accomack/Northampton
County—Accomack
County—Northampton
Bedford
County—Bedford
County—Bedford City
City Of Suffolk
County—Suffolk
Parts:
C.T. 651
C.T. 653–655
C.T. 756
Lovingston
County—Nelson
Parts:
Lovingston District
Massies Mill District
Schuyler District
Low Inc—Downtown Portsmouth
County—Portsmouth City

DENTAL: Virginia
Population Group Listing

Population Group

Homeless—Richmond City
County—Richmond City
Parts:
C.T. 301–306
C.T. 412–415
Low Inc—Newport News
County—Newport News
Parts:
C.T. 301–302
C.T. 302.99
C.T. 303.98
C.T. 304–306
C.T. 308–310
C.T. 313
Low Inc—Prince Edward Co
County—Prince Edward
Parts:
Low Income
Low Inc—Westmoreland Co
County—Westmoreland
Parts:
Low Income
Low Inc East End Richmond
County—Richmond City
Parts:

DENTAL: Virginia
Population Group Listing

Population Group

C.T. 106–111
C.T. 201–212
C.T. 402
Low Income—Buckingham Co
County—Buckingham
Parts:
Low Income
Low Income—King And Queen Co
County—King And Queen
Parts:
Low Income

DENTAL: Washington
County Listing

County Name

*Adams
Population Group: Low Inc/MFW—Othello/Royal City
Benton
Population Group: Low Inc/MFW—Benton/Franklin
*Chelan
Population Group: MSFW—Chelan & Douglas Co
*Clallam
Service Area: W Side Olympic Peninsula
*Columbia
Population Group: Low Inc/MFW—Columbia & Walla Walla
*Cowlitz
Population Group: Low Income—Cowlitz Co
*Douglas
Population Group: MSFW—Chelan & Douglas Co
*Ferry
Franklin
Population Group: Low Inc/MFW—Benton/Franklin
Facility: Coyote Ridge Corr Inst
*Grant
Population Group: Low Inc/MFW—Central Grant Co
*Grays Harbor
Population Group: Low Inc—Grays Harbor
*Island
Population Group: Low Inc—Whidbey Island
*Jefferson
Service Area: W Side Olympic Peninsula
Population Group: Low Inc—Port Townsend
King
Population Group: Low Inc/Homeless—S. King Co
Kitsap
Population Group: Low Inc—Central Bremerton
*Klickitat
Population Group: Low Inc—E Klickitat Co
Population Group: Low Inc/MFW—W Klickitat Co
*Lewis
Population Group: Low Income—Lewis Co
*Lincoln
Service Area: Odessa
*Mason (g)
Facility: Wa Corr/Reception Ctr
*Okanogan
Population Group: Medicaid Eligible—Okanogan Co

DENTAL: Washington
County Listing

County Name

*Pacific
*Pend Oreille
  Service Area: Ione/Metaline
Pierce
  Population Group: Medicaid—S. Pierce Co
*Skagit
  Population Group: Low Inc/MFW—Skagit/Whatcom
Snohomish
  Population Group: Low Inc/Homeless—Everett/Lynnwood
  Facility: Twin Rivers Corr Ctr
Spokane
  Population Group: Low Inc—Central Spokane
*Stevens
Thurston
  Population Group: Low Inc—Yelm
*Wahkiakum
  Population Group: Low Income—Wahkiakum Co
*Walla Walla
  Population Group: Low Inc/MFW—Columbia & Walla Walla
  Facility: Wa State Pen
Whatcom
  Population Group: Low Inc/MFW—Skagit/Whatcom
Yakima
  Population Group: MSFW—Toppenish/Grandview

DENTAL: Washington
Service Area Listing

Service Area Name

Ione/Metaline
  County—Pend Oreille
    Parts:
      Ione-Metaline Falls Division
Odessa
  County—Lincoln
    Parts:
      Odessa Division
W Side Olympic Peninsula
  County—Clallam
    Parts:
      C.T. 9802–9805
  County—Jefferson
    Parts:
      C.T. 9501

DENTAL: Washington
Population Group Listing

Population Group

Low Inc—Central Bremerton
  County—Kitsap
    Parts:
      C.T. 805–806
      C.T. 810–813
Low Inc—Central Spokane
  County—Spokane
    Parts:
      Spokane CCD
Low Inc—E Klickitat Co
  County—Klickitat
    Parts:
      Goldendale CCD
      Horse Heaven CCD
Low Inc—Grays Harbor
  County—Grays Harbor

DENTAL: Washington
Population Group Listing

Population Group

    Parts:
      Low Income
Low Inc—Port Townsend
  County—Jefferson
    Parts:
      Discovery Bay CCD
      Oak Bay CCD
      Quilcene Bay CCD
Low Inc—Whidbey Island
  County—Island
    Parts:
      Central Whidbey CCD
      North Whidbey CCD
      South Whidbey CCD
Low Inc—Yelm
  County—Thurston
    Parts:
      Olympia East Div
      Olympia West Div
      Thurston South Div
Low Inc/Homeless—Everett/Lynnwood
  County—Snohomish
    Parts:
      C.T. 401.98
      C.T. 402–408
      C.T. 410–412
      C.T. 414–415
      C.T. 418.01
      C.T. 418.03–418.04
      C.T. 419.01–419.02
      C.T. 510–512
      C.T. 514–515
      C.T. 517
      C.T. 518.01–518.02
Low Inc/Homeless—S. King Co
  County—King
    Parts:
      C.T. 259
      C.T. 292.01–292.02
      C.T. 297
      C.T. 298.01–298.02
      C.T. 299
      C.T. 300.02
      C.T. 302.02
      C.T. 303.03
      C.T. 305–308
Low Inc/MFW—Benton/Franklin
  County—Benton
    Parts:
      Low Inc/MFW
  County—Franklin
    Parts:
      Low Inc/MFW
Low Inc/MFW—Central Grant Co
  County—Grant
    Parts:
      Ephrata-Soap Lake CCD
      George CCD
      Gloyd CCD
      Moses Lake CCD
      Quincy CCD
      Warden CCD
      Wilson Creek CCD
Low Inc/MFW—Columbia & Walla Walla
  County—Columbia
    Parts:
      Columbia
  County—Walla Walla
    Parts:
      Walla Walla
Low Inc/MFW—Othello/Royal City
  County—Adams

DENTAL: Washington
Population Group Listing

Population Group

    Parts:
      Lind-Washtucna Div
      Ritzville Div
Low Inc/MFW—Skagit/Whatcom
  County—Skagit
    Parts:
      Low Income
      MFW
  County—Whatcom
    Parts:
      Low Income
      MFW
Low Inc/MFW—W Klickitat Co
  County—Klickitat
    Parts:
      Wahkiakus CCD
      White Salmon CCD
      Yakima Res CCD
Low Income—Cowlitz Co
  County—Cowlitz
    Parts:
      Low Income
Low Income—Lewis Co
  County—Lewis
    Parts:
      Low Income
Low Income—Wahkiakum Co
  County—Wahkiakum
    Parts:
      Low Income
Medicaid—S. Pierce Co
  County—Pierce
    Parts:
      Buckley CCD
      Eatonville CCD
      Fort Lewis—Du Pont CCD
      Graham-Thrift CCD
      Mount Rainier CCD
      Puyallup CCD
      Roy CCD
      Tacoma CCD
Medicaid Eligible—Okanogan Co
  County—Okanogan
    Parts:
      Medicaid Eligible
MSFW—Chelan & Douglas Co
  County—Chelan
    Parts:
      MSFW
  County—Douglas
    Parts:
      MSFW
MSFW—Toppenish/Grandview
  County—Yakima
    Parts:
      Mabton CCD
      S Yakima CCD
      Sunnyside CCD
      Toppenish/Wapato CCD

DENTAL: Washington
Facility Listing

Facility Name

Coyote Ridge Corr Inst
  County—Franklin
Twin Rivers Corr Ctr
  County—Snohomish
Wa Corr/Reception Ctr
  County—Mason
Wa State Pen
  County—Walla Walla

DENTAL: West Virginia
County Listing

County Name

*Calhoun
*Hampshire
Service Area: Baker
*Hardy
Service Area: Baker
Kanawha
Service Area: Cedar Grove
*Lincoln
*Logan
*McDowell
*Monongalia
Service Area: Clay/Battelle (WV/PA)
*Raleigh
Facility: FCI Beckley
*Roane
Population Group: Low Inc—Roane Co
*Summers
Wayne
Population Group: Low-Inc Wayne/Ft. Gay
*Wetzel
Service Area: Clay/Battelle (WV/PA)
*Wirt
Population Group: Low Inc—Wirt Co

DENTAL: West Virginia
Service Area Listing

Service Area Name

Baker
County—Hampshire
Parts:
Capon District
County—Hardy
Parts:
Capon District
Lost River District
Cedar Grove
County—Kanawha
Parts:
C.T. 118
Clay/Battelle (WV/PA)
County—Monongalia
Parts:
Western District
County—Wetzel
Parts:
District 1

DENTAL: West Virginia
Population Group Listing

Population Group

Low Inc—Roane Co
County—Roane
Parts:
Low Income
Low Inc—Wirt Co
County—Wirt
Parts:
Low Income
Low-Inc Wayne/Ft. Gay
County—Wayne
Parts:
Butler Dist
Stonewall Dist
Union Dist

DENTAL: West Virginia
Facility Listing

Facility Name

FCI Beckley
County—Raleigh

DENTAL: Wisconsin
County Listing

County Name

*Adams
Population Group: Low Inc—Adams Co
Facility: FCI Oxford
*Barron
Population Group: Low Inc—Barron Co
*Bayfield
Population Group: Low Inc—Bayfield Co
*Burnett
Population Group: Low Inc—Burnett Co
Chippewa
Population Group: Low Inc—Chippewa Co
Dane
Population Group: Low Inc—Central Madison
Douglas
Population Group: Low Inc—Douglas Co
*Dunn
Population Group: Low Inc—Dunn Co
*Forest
Service Area: Mountain
Population Group: Low Inc—Crandon
Kenosha
Population Group: Low Inc—Kenosha City
La Crosse
Population Group: Low Inc—LA Crosse Co
*Langlade
Service Area: Mountain
Population Group: Low Inc—Langlade/Antigo
*Lincoln
Population Group: Low Inc—Lincoln Co
Marathon
Population Group: Low Inc—Wausau City
*Marinette
Population Group: Low Inc—Marinette Co
Milwaukee
Service Area: Inner City West
Service Area: Inner City North (Milwaukee)
Population Group: Low Inc—Inner City Southeast
Population Group: Low Inc—Inner City South
*Monroe
Population Group: Low Inc—Monroe Co
*Oconto
Service Area: Mountain
*Oneida
Population Group: Low Inc—Oneida Co
Population Group: Low Inc—Langlade/Antigo
*Pepin
Population Group: Low Inc—Pepin Co
*Polk
Population Group: Low Inc—Polk Co
*Price
Population Group: Low Inc—Price Co
Rock
Population Group: Low Inc—Central Beloit City
*Rusk
Population Group: Low Inc—Rusk Co
*Sawyer
Population Group: Low Inc—Sawyer Co
*Taylor
Population Group: Low Inc—Taylor Co
*Vernon
Population Group: Low Inc—Vernon Co
*Vilas
Population Group: Low Inc—Vilas Co
*Washburn
Population Group: Low Inc—Washburn Co
*Waushara
Population Group: Low Inc—Waushara Co

DENTAL: Wisconsin
Service Area Listing

Service Area Name

Inner City North (Milwaukee)
County—Milwaukee
Parts:
C.T. 66–72
C.T. 79–86
C.T. 101–107
C.T. 114–118
C.T. 139–142
C.T. 145–147
C.T. 151
Inner City West
County—Milwaukee
Parts:
C.T. 62
C.T. 87–90
C.T. 96–100
C.T. 119–123
C.T. 133–138
C.T. 148–149
Mountain
County—Forest
Parts:
Blackwell Town
Freedom Town
Wabeno Town
County—Langlade
Parts:
Evergreen Town
Langlade Town
White Lake Village
Wolf River Town
County—Oconto
Parts:
Armstrong Town
Bagley Town
Brazeau Town
Breed Town
Doty Town
Lakewood Town
Riverview Town
Townsend Town

DENTAL: Wisconsin
Population Group Listing

Population Group

Low Inc—Adams Co
County—Adams
Parts:
Low Income
Low Inc—Barron Co
County—Barron
Parts:
Low Income
Low Inc—Burnett Co
County—Burnett
Parts:
Low Income
Low Inc—Central Beloit City
County—Rock
Parts:
C.T. 15–19
Low Inc—Central Madison
County—Dane
Parts:
C.T. 11
C.T. 12.98
C.T. 13.98
C.T. 14.01
C.T. 16.01–16.02
C.T. 17
Low Inc—Chippewa Co

DENTAL: Wisconsin
Population Group Listing

Population Group

County—Chippewa
Parts:
Low Income
Low Inc—Crandon
County—Forest
Parts:
Alvin Town
Argonnetown
Armstrong Creek Town
Caswell Town
Crandon City
Crandon Town
Hiles Town
Laona Town
Lincoln Town
Nashville Town
Popple River Town
Ross Town
Low Inc—Douglas Co
County—Douglas
Parts:
Low Income
Low Inc—Dunn Co
County—Dunn
Parts:
Low Income
Low Inc—Inner City Southeast
County—Milwaukee
Parts:
C.T. 178.98
C.T. 179
C.T. 180.97–180.98
Low Inc—Inner City South
County—Milwaukee
Parts:
C.T. 155–159
C.T. 162–169
C.T. 174–177
C.T. 186
Low Inc—Kenosha City
County—Kenosha
Parts:
C.T. 3–4
C.T. 7–12
C.T. 16–18
Low Inc—Lincoln Co
County—Lincoln
Parts:
Low Income
Low Inc—LA Crosse Co
County—La Crosse
Parts:
Low Income
Low Inc—Marinette Co
County—Marinette
Parts:
Low Income
Low Inc—Monroe Co
County—Monroe
Parts:
Low Income
Low Inc—Oneida Co
County—Oneida
Parts:
Low Income
Low Inc—Pepin Co
County—Pepin
Parts:
Low Income
Low Inc—Polk Co
County—Polk
Parts:

DENTAL: Wisconsin
Population Group Listing

Population Group

Low Income
Low Inc—Price Co
County—Price
Parts:
Low Income
Low Inc—Rusk Co
County—Rusk
Parts:
Low Income
Low Inc—Sawyer Co
County—Sawyer
Parts:
Low Income
Low Inc—Vilas Co
County—Vilas
Parts:
Low Income
Low Inc—Washburn Co
County—Washburn
Parts:
Low Income
Low Inc—Wausau City
County—Marathon
Parts:
C.T. 1–2
C.T. 4–5
C.T. 6.01–6.02
C.T. 7
Low Inc—Waushara Co
County—Waushara
Parts:
Low Income
Low Inc—Bayfield Co
County—Bayfield
Parts:
Low Income
Low Inc—Langlade/Antigo
County—Langlade
Parts:
Ackley Town
Ainsworth Town
Antigo City
Antigo Town
Elcho Town
Neva Town
Norwood Town
Parrish Town
Peck Town
Polar Town
Price Town
Rolling Town
Summit Town
Upham Town
County—Oneida
Parts:
Vilas Town
Low Inc—Taylor Co
County—Taylor
Parts:
Low Income
Low Inc—Vernon Co
County—Vernon
Parts:
Low Income

DENTAL: Wisconsin
Facility Listing

Facility Name

FCI Oxford
County—Adams

DENTAL: Wyoming
County Listing

County Name

*Niobrara

DENTAL: American Samoa
County Listing

County Name

*Eastern
Service Area: Terr. Of American Samoa
*Manua
Service Area: Terr. Of American Samoa
*Rose Island
Service Area: Terr. Of American Samoa
*Swains Island
Service Area: Terr. Of American Samoa
*Western
Service Area: Terr. Of American Samoa

DENTAL: American Samoa
Service Area Listing

Service Area Name

Terr. Of American Samoa
County—Eastern
County—Manua
County—Rose Island
County—Swains Island
County—Western

DENTAL: Fed Ste Micronesia
County Listing

County Name

*Chuuk State
*Kosrae State
*Pohnpei State
*Yap State

DENTAL: Guam
County Listing

County Name

*Guam

DENTAL: N. Mariana Islands
County Listing

County Name

*Northern Islands
Service Area: Commonwealth N. Marianas Islands
*Rota
Service Area: Commonwealth N. Marianas Islands
*Saipan
Service Area: Commonwealth N. Marianas Islands
*Tinian
Service Area: Commonwealth N. Marianas Islands

DENTAL: N. Mariana Islands
Service Area Listing

Service Area Name

Commonwealth N. Marianas Islands
County—Northern Islands
County—Rota
County—Saipan
County—Tinian

DENTAL: Republic of Palau
County Listing

County Name
*Republic Of Palau

DENTAL: Puerto Rico
County Listing

County Name
*Adjuntas
Population Group: Low Inc—RSA 7
Aguada
Population Group: Low Inc—RSA 1
Aguadilla
Population Group: Low Inc—RSA 6
*Aguas Buenas
Service Area: Caguas (Sub-Region I)
*Aibonito
Population Group: Low Inc—RSA 21
Anasco
Population Group: Low Inc—RSA 1
*Arecibo
Population Group: Low Inc—RSA 7
*Arroyo
Population Group: Low Inc—RSA 19
*Barceloneta
Population Group: Low Inc—RSA 7
*Barranquitas
Population Group: Low Inc—RSA 8
Cabo Rojo
Population Group: Low Inc—RSA 3
*Caguas
Service Area: Caguas (Sub-Region I)
*Camuy
Population Group: Low Inc—RSA 4
*Canovanas
Population Group: Low Inc—RSA 14
*Carolina
Service Area: Low Inc—RSA 13
*Catano
Population Group: Low Inc—RSA 9
*Cayey
Population Group: Low Inc—RSA 21
*Ceiba
Population Group: Low Inc—RSA 14
*Ciales
Population Group: Low Inc—RSA 24
*Cidra
Service Area: Caguas (Sub-Region I)
*Coamo
Population Group: Low Inc—RSA 20
*Comerio
Population Group: Low Inc—RSA 8
*Corozal
Population Group: Low Inc—RSA 8
*Culebra
Population Group: Low Inc—RSA 14
*Dorado
Population Group: Low Inc—RSA 9
*Fajardo
Population Group: Low Inc—RSA 14
*Florida
Population Group: Low Inc—RSA 7
*Guanica
Population Group: Low Inc—RSA 2
*Guayama
Population Group: Low Inc—RSA 19
Guayanilla
Population Group: Low Inc—RSA 2
*Gurabo
Service Area: Caguas (Sub-Region I)
*Hatillo
Population Group: Low Inc—RSA 4
Hormigueros
Population Group: Low Inc—RSA 3

DENTAL: Puerto Rico
County Listing

County Name
*Humacao
Population Group: Low Inc—RSA 17
*Isabela
Population Group: Low Inc—RSA 6
*Jayuya
Population Group: Low Inc—RSA 7
Juana Diaz
Population Group: Low Inc—RSA 20
*Juncos
Service Area: Caguas (Sub-Region I)
*Lajas
Population Group: Low Inc—RSA 3
*Lares
Population Group: Low Inc—RSA 4
*Las Marias
Population Group: Low Inc—RSA 4
*Las Peidras
Population Group: Low Inc—RSA 17
*Loiza
Population Group: Low Inc—RSA 14
*Luquillo
Population Group: Low Inc—RSA 14
*Manati
Population Group: Low Inc—RSA 24
*Maricao
Population Group: Low Inc—RSA 4
*Maunabo
Population Group: Low Inc—RSA 19
Mayaguez
Population Group: Low Inc—RSA 1
Moca
Population Group: Low Inc—RSA 6
*Morovis
Population Group: Low Inc—RSA 24
*Naguabo
Population Group: Low Inc—RSA 17
*Naranjito
Population Group: Low Inc—RSA 8
*Orocovis
Population Group: Low Inc—RSA 8
*Patillas
Population Group: Low Inc—RSA 19
Penuelas
Population Group: Low Inc—RSA 2
*Quebradillas
Population Group: Low Inc—RSA 6
*Rincon
Population Group: Low Inc—RSA 1
*Rio Grande
Population Group: Low Inc—RSA 14
Sabana Grande
Population Group: Low Inc—RSA 2
*Salinas
Population Group: Low Inc—RSA 20
San German
Population Group: Low Inc—RSA 3
*San Lorenzo
Population Group: Low Inc—RSA 17
*San Sebastian
Population Group: Low Inc—RSA 4
*Santa Isabel
Population Group: Low Inc—RSA 20
*Toa Alta
Population Group: Low Inc—RSA 9
*Toa Baja
Population Group: Low Inc—RSA 9
*Trujillo Alto
Service Area: Low Inc—RSA 13
*Utuado
Population Group: Low Inc—RSA 7
*Vega Alta
Population Group: Low Inc—RSA 23

DENTAL: Puerto Rico
County Listing

County Name
*Vega Baja
Population Group: Low Inc—RSA 23
*Vieques
Population Group: Low Inc—RSA 14
Villalba
Population Group: Low Inc—RSA 20
*Yabucoa
Population Group: Low Inc—RSA 17
*Yauco
Population Group: Low Inc—RSA 2

DENTAL: Puerto Rico
Service Area Listing

Service Area Name
Caguas (Sub-Region I)
County—Aguas Buenas
County—Caguas
County—Cidra
County—Gurabo
County—Juncos
Low Inc—RSA 13
County—Carolina
County—Trujillo Alto

DENTAL: Puerto Rico
Population Group Listing

Population Group
Low Inc—RSA 1
County—Aguada
Parts:
Aguada
County—Anasco
Parts:
Anasco
County—Mayaguez
Parts:
Mayaguez
County—Rincon
Parts:
Rincon
Low Inc—RSA 14
County—Canovanas
Parts:
Canovanas
County—Ceiba
Parts:
Ceiba
County—Culebra
Parts:
Culebra
County—Fajardo
Parts:
Fajardo
County—Loiza
Parts:
Loiza
County—Luquillo
Parts:
Luquillo
County—Rio Grande
Parts:
Rio Grande
County—Vieques
Parts:
Vieques
Low Inc—RSA 17
County—Humacao
Parts:
Humacao
County—Las Peidras

DENTAL: Puerto Rico
Population Group Listing

Population Group

Parts:
Las Piedras
County—Naguabo
Parts:
Naguabo
County—San Lorenzo
Parts:
San Lorenzo
County—Yabucoa
Parts:
Yabucoa
Low Inc—RSA 19
County—Arroyo
Parts:
Arroyo
County—Guayama
Parts:
Guayama
County—Maunabo
Parts:
Maunabo
County—Patillas
Parts:
Patillas
Low Inc—RSA 2
County—Guanica
Parts:
Guanica
County—Guayanilla
Parts:
Guayanilla
County—Penuelas
Parts:
Penuelas
County—Sabana Grande
Parts:
Sabana Grande
County—Yauco
Parts:
Yauco
Low Inc—RSA 20
County—Coamo
Parts:
Coamo
County—Juana Diaz
Parts:
Juana Diaz
County—Salinas
Parts:
Salinas
County—Santa Isabel
Parts:
Santa Isabel
County—Villalba
Parts:
Villalba
Low Inc—RSA 21
County—Aibonito
Parts:
Aibonita
County—Cayey

DENTAL: Puerto Rico
Population Group Listing

Population Group

Parts:
Cayey
Low Inc—RSA 23
County—Vega Alta
Parts:
Low Income
County—Vega Baja
Parts:
Low Income
Low Inc—RSA 24
County—Ciales
Parts:
Ciales
County—Manati
Parts:
Manati
County—Morovis
Parts:
Morovis
Low Inc—RSA 3
County—Cabo Rojo
Parts:
Cabo Rojo
County—Hormigueros
Parts:
Hormiqueros
County—Lajas
Parts:
Lajas
County—San German
Parts:
San German
Low Inc—RSA 4
County—Camuy
Parts:
Camuy
County—Hatillo
Parts:
Hatillo
County—Lares
Parts:
Lares
County—Las Marias
Parts:
Las Marias
County—Maricao
Parts:
Maricao
County—San Sebastian
Parts:
San Sebastian
Low Inc—RSA 6
County—Aguadilla
Parts:
Aguadilla
County—Isabela
Parts:
Isabela
County—Moca
Parts:
Moca

DENTAL: Puerto Rico
Population Group Listing

Population Group

County—Quebradillas
Parts:
Quebradillas
Low Inc—RSA 7
County—Adjuntas
Parts:
Adjuntas
County—Arecibo
Parts:
Arecibo
County—Barceloneta
Parts:
Barceloneta
County—Florida
Parts:
Florida
County—Jayuya
Parts:
Jayuya
County—Utuado
Parts:
Utuado
Low Inc—RSA 8
County—Barranquitas
Parts:
Barranquitas
County—Comerio
Parts:
Comerio
County—Corozal
Parts:
Corozal
County—Naranjito
Parts:
Naranjito
County—Orocovis
Parts:
Orocovis
Low Inc—RSA 9
County—Catano
Parts:
Catano
County—Dorado
Parts:
Dorado
County—Toa Alta
Parts:
Toa Alta
County—Toa Baja
Parts:
Toa Baja

DENTAL: Virgin Islands
County Listing

County Name

*St. Croix

[FR Doc. 02–2967 Filed 2–19–02; 8:45 am]
BILLING CODE 4165–15–P

Federal Register

Wednesday,
February 20, 2002

Part II

Department of Health and Human Services

Health Resources and Services Administration

Lists of Designated Primary Medical Care, Mental Health, and Dental Health Professional Shortage Areas; Notice

DEPARTMENT OF HEALTH AND HUMAN SERVICES

Health Resources and Services Administration

Lists of Designated Primary Medical Care, Mental Health, and Dental Health Professional Shortage Areas

AGENCY: Health Resources and Services Administration, HHS.

ACTION: Notice.

SUMMARY: This notice provides lists of all areas, population groups, and facilities designated as primary medical care, mental health, and dental health professional shortage areas (HPSAs) as of May 23, 2001. HPSAs are designated or withdrawn by the Secretary of Health and Human Services (HHS) under the authority of section 332 of the Public Health Service (PHS) Act.

FOR FURTHER INFORMATION CONTACT: Requests for further information on the HPSA designations listed below and requests for additional designations, withdrawals, or reinstatement of a withdrawn designation should be submitted to Jerilyn A. Thornburg, R.N., M.P.H., Director, Division of Shortage Designation, Bureau of Health Professions, Health Resources and Services Administration, 4350 East-West Highway, Bethesda, Maryland 20814 (301–594–0816).

SUPPLEMENTARY INFORMATION:

1. Background

Section 332 of the PHS Act, 42 U.S.C. 254e, provides that the Secretary of HHS shall designate HPSAs based on criteria established by regulation. HPSAs are defined in section 332 to include (1) urban and rural geographic areas with shortages of health professionals, (2) population groups with such shortages, and (3) facilities with such shortages. Section 332 further requires that the Secretary annually publish a list of the designated geographic areas, population groups, and facilities. The list of HPSAs is to be reviewed at least annually and revised as necessary. The Health Resources and Services Administration's (HRSA) Bureau of Health Professions (BHPr) has the responsibility for designating and updating HPSAs.

Public or private nonprofit entities are eligible to apply for assignment of National Health Service Corps (NHSC) personnel to provide primary health services in or to these HPSAs. NHSC health professionals with a service obligation may serve only in federally designated HPSAs. Programs with clinical training sites located in HPSAs are eligible to receive priority for certain residency training program grants administered by BHPr.

Several programs administered by the Center for Medicare and Medicaid Services (formerly the Health Care Financing Administration) also use the HPSA designation. Certain qualified providers in HPSAs are eligible for increased levels of Medicare and Medicaid reimbursement.

2. Development of the Designation and Withdrawal Lists

Criteria for designating HPSAs were published as final regulations (42 CFR part 5) in 1980. Criteria were then defined for each of seven health professional types (primary medical care, dental, psychiatric, vision care, podiatric, pharmacy, and veterinary care). The criteria for correctional facility HPSAs were revised at 54 FR 8738 in 1989, and the criteria for psychiatric HPSAs were expanded to mental health HPSAs at 57 FR 2477 in 1992. The currently-funded PHS programs which use the HPSA designations involve only the primary medical care, mental health, or dental HPSAs.

Individual requests for designation or withdrawal of a particular area, population group, or a facility as a HPSA are received and reviewed continuously by BHPr. The review process includes routine submission of such requests to the appropriate State Health Planning and Development Agency (SHPDA) and/or a unit of the State Health Department, the Governor, and other interested organizations and individuals for their comments and recommendations. Requests regarding primary medical care and mental health HPSAs are also submitted to the appropriate State medical society for comment, and dental HPSA requests are submitted to the appropriate State dental society.

Annually, lists of designated HPSAs are provided to all SHPDAs and/or State health departments, State medical and dental societies and others, together with a request to review and update the data on which the designations are based. Emphasis is placed on updating those designations which are more than three years old or where significant changes relevant to the designation criteria have occurred.

Recommendations for possible additions, continuations, revisions or withdrawals from the HPSA list are reviewed by BHPr, and the review findings are provided by letter to the agency or individual requesting action or providing data, with copies to other interested organizations and individuals. These letters constitute the official notice of designation as a HPSA, rejection of recommendations for HPSA designation, revision of a HPSA designation, and/or advance notice of pending withdrawals from the HPSA list. Designations (or revisions of designations) are effective as of the date of the notification letter from BHPr. Proposed withdrawals become effective only after interested parties in the area affected have been afforded the opportunity to submit additional information to BHPr in support of its continued or revised designation. If no new data are submitted or if the BHPr review confirms the proposed withdrawal, the withdrawal becomes effective upon publication in the **Federal Register** of a list of HPSAs that does not include the HPSA for which withdrawal has been proposed.

This notice contains three lists of designated HPSAs. Each list (primary medical care, mental health, and dental) includes all those areas, population groups, and facilities which were designated HPSAs as of May 23, 2001. This notice incorporates the most recent annual review of designated HPSAs and supersedes the HPSA list published in the **Federal Register** on September 15, 2000. The lists below include 2,781 primary medical care, 798 mental health, and 1,580 dental HPSAs.

3. Format of Lists

Each list of designated HPSAs (primary medical care, mental health, and dental) is arranged by State. Within each State, the list is first presented by county. If only a portion (or portions) of a county is (are) designated, or if the county is part of a larger designated service area, or if a population group residing in the county or a facility located in the county has been designated, the name of the service area, population group, or facility involved is listed under the county name. Counties which have a geographic HPSA designation in addition to one or more facility designations within the county are indicated by a ''(g)'' following the county name.

Following the county listing, a list of any designated service areas is presented, identifying their component parts—counties, towns, townships, census tracts (CTs), minor civil divisions (MCDs), census county divisions (CCDs), block numbering areas (BNAs), or magisterial districts, as defined by the Bureau of the Census. Those counties (or parts of counties included in service areas) which are classified as nonmetropolitan are indicated by an asterisk (*). ''Nonmetropolitan'' refers to those

counties not included in the definition of metropolitan areas established by the Office of Management and Budget (OMB Bulletin 99–04 dated June 30, 1999).

Following the service area listing, a list of designated population groups (if any) is presented identifying each group and the geographic area wherein it resides. Following the population group listing, a list by name and location of any separately designated facilities (including prisons, correctional institutions, health centers, or hospitals) is presented.

In addition to the specific listings included in this notice, all Indian tribes which meet the definition of such tribes in the Indian Health Care Improvement Act of 1976, 25 U.S.C. 1603(d), are automatically designated as population groups with primary medical care and dental health professional shortages.

4. Future Updates of Lists of Designated HPSAs

The lists of HPSAs below consist of all those which were designated as of May 23, 2001. It should be noted that additional HPSAs may have been designated by letter since May 23. The appropriate agencies and individuals have been or will be notified of these actions by letter.

Any designated HPSA listed below is subject to withdrawal from designation if new information received and confirmed by HPSAs indicates that the relevant data for the area involved have significantly changed since its designation or that incorrect or incomplete data were used in making the original designation.

All requests for new designations, updates, or withdrawals should be based on the relevant criteria in regulations published at 42 CFR part 5 (1997).

(Authority: 42 U.S.C. 254e)

5. Electronic access address

Information on HPSAs is also available at http://www.bphc.hrsa.gov/dsd.

Dated: January 31, 2002.

Elizabeth M. Duke,

Acting Administrator.

PRIMARY MEDICAL CARE: Alabama
County Listing

County Name

Autauga
  Service Area: Autaugaville
  Population Group: Low Inc—Montgomery/Prattville
Baldwin
  Service Area: Atmore/Century (AL/FL)
  Population Group: Low Inc—Central/South Baldwin
*Barbour
  Service Area: Clayton
  Population Group: Low Inc—Eufaula
*Bibb
Blount
*Bullock
  Service Area: Bullock-Macon
*Butlerc
  Service Area: Butler/South Lowndes
*Chambers
  Service Area: La Fayette
  Population Group: Low Inc—Valley
*Cherokee
*Chilton
*Choctaw
*Clarke
  Population Group: Low Inc—Clarke Co
*Clay
*Cleburne
*Coffee
  Population Group: Low Inc—Coffee Co
Colbert
  Service Area: Cherokee
*Conecuh
*Coosa
*Covington
  Service Area: South Covington
  Population Group: Low Inc—North Covington
*Crenshaw
*Cullman
  Population Group: Low Inc—Cullman Co
Dale
*De Kalb
  Population Group: Low Inc—Dekalb
Elmore
*Escambia
  Service Area: Atmore/Century (AL/FL)
Etowah
  Population Group: Low Inc—Etowah Co
*Fayette
  Population Group: Low Inc—Fayette Co
*Franklin
  Population Group: Low Inc—Franklin
*Geneva
*Greene
  Service Area: Greene-Hale
*Hale
  Service Area: Greene-Hale
*Henry
*Jackson
  Population Group: Low Inc—Jackson Co
Jefferson
  Population Group: Low Inc—Central Birmingham
*Lamar
Lauderdale
  Population Group: Low Inc—Lauderdale Co
Lawrence
*Lee
  Population Group: Low Inc—Lee County
Limestone
  Population Group: Low Inc—Limestone Co
*Lowndes
  Service Area: Butler/South Lowndes
  Service Area: North Lowndes
*Macon
  Service Area: Bullock-Macon
Madison
  Population Group: Low Inc—C Huntsville
*Marion
  Population Group: Low Inc—Marion Co
*Marshall
  Population Group: Low Inc—Marshall Co
Mobile
  Population Group: Low Inc—Mobile County
*Monroe
  Service Area: Atmore/Century (AL/FL)
  Population Group: Low Inc—Monroeville
Montgomery
  Population Group: Low Inc—Montgomery/Prattville
Morgan
  Population Group: Low Inc—Morgan Co
*Perry
*Pickens
*Randolph
Russell
  Population Group: Low Inc—Russell
Shelby
St Clair
*Sumter
  Population Group: Low Inc—Sumter
*Talladega
  Population Group: Low Inc—Talladega Co
  Facility: FCI Talladega
*Tallapoosa
  Service Area: Camp Hill
Tuscaloosa
  Population Group: Low Inc—Tuscaloosa Co
*Walker
  Population Group: Low Inc—Walker Co
*Washington
*Wilcox
*Winston

PRIMARY MEDICAL CARE: Alabama
Service Area Listing

Service Area Name

Atmore/Century (AL/FL)
  County—Baldwin
    Parts:
      C.T. 101
  County—Escambia
    Parts:
      C.T. 9703–9707
  County—Monroe
    Parts:
      C.T. 9862
Autaugaville
  County—Autauga
    Parts:
      Autaugaville Division
      Billingsley Division
      Marbury Division
Bullock-Macon
  County—Bullock
  County—Macon
Butler/South Lowndes
  County—Butler
  County—Lowndes
    Parts:
      Braggs-Prairie Hill Division
      Fort Deposit Division
Camp Hill
  County—Tallapoosa
    Parts:
      Camp Hill Division
      Dadeville Division
      Tallassee Division
Cherokee
  County—Colbert

PRIMARY MEDICAL CARE: Alabama
Service Area Listing

Service Area Name

Parts:
Cherokee Division
Clayton
County—Barbour
Parts:
Clayton Division
Clio Division
Louisville Division
Greene-Hale
County—Greene
County—Hale
La Fayette
County—Chambers
Parts:
C.T. 9537–9538
C.T. 9540–9541
North Lowndes
County—Lowndes
Parts:
Benton-Collirene Division
Hayneville Division
Lowndesboro Division
South Covington
County—Covington
Parts:
Falco Division
Florala Division

PRIMARY MEDICAL CARE: Alabama
Population Group Listing

Population Group

Low Inc—C Huntsville
County—Madison
Parts:
Gurley CCD
Hazel Green CCD
Huntsville CCD
Madison Crossroads CCD
New Hope CCD
New Market CCD
Low Inc—Central Birmingham
County—Jefferson
Parts:
C.T. 3–5
C.T. 7–8
C.T. 11–12
C.T. 14–16
C.T. 19.02
C.T. 22
C.T. 23.03–23.04
C.T. 24
C.T. 27
C.T. 29
C.T. 30.01–30.02
C.T. 31–34
C.T. 39–40
C.T. 42
C.T. 45
C.T. 51.01
C.T. 55
Low Inc—Central/South Baldwin
County—Baldwin
Parts:
C.T. 102–106
C.T. 107.01–107.03
C.T. 108
C.T. 109.01–109.02
C.T. 110–111
C.T. 112.01–112.02
C.T. 113
C.T. 114.01–114.02

PRIMARY MEDICAL CARE: Alabama
Population Group Listing

Population Group

C.T. 115–116
Low Inc—Clarke Co
County—Clarke
Parts:
Low Income
Low Inc—Coffee Co
County—Coffee
Low Inc—Cullman Co
County—Cullman
Parts:
Low Income
Low Inc—Dekalb
County—De Kalb
Parts:
Low Income
Low Inc—Etowah Co
County—Etowah
Parts:
Low Income
Low Inc—Eufaula
County—Barbour
Parts:
C.T. 9501
C.T. 9505–9509
Low Inc—Fayette Co
County—Fayette
Parts:
Low Income
Low Inc—Franklin
County—Franklin
Parts:
Low Income
Low Inc—Jackson Co
County—Jackson
Parts:
Low Income
Low Inc—Lauderdale Co
County—Lauderdale
Parts:
Low Income
Low Inc—Lee County
County—Lee
Parts:
Low Income
Low Inc—Limestone Co
County—Limestone
Parts:
Low Income
Low Inc—Marion Co
County—Marion
Parts:
Low Income
Low Inc—Marshall Co
County—Marshall
Parts:
Low Income
Low Inc—Mobile County
County—Mobile
Parts:
Low Income
Low Inc—Monroeville
County—Monroe
Parts:
Beatrice CCD
Frisco City CCD
Monroeville CCD
Peterman CCD
Vredenburgh CCD
Low Inc—Montgomery/Prattville
County—Autauga
Parts:
C.T. 201–208

PRIMARY MEDICAL CARE: Alabama
Population Group Listing

Population Group

County—Montgomery
Parts:
Low Income
Low Inc—Morgan Co
County—Morgan
Parts:
Low Income
Low Inc—North Covington
County—Covington
Parts:
Andalusia Division
Opp Division
Rosehill-Gantt Division
Low Inc—Russell
County—Russell
Parts:
Low Income
Low Inc—Sumter
County—Sumter
Parts:
Low Income
Low Inc—Talladega Co
County—Talladega
Parts:
Low Income
Low Inc—Tuscaloosa Co
County—Tuscaloosa
Parts:
Low Income
Low Inc—Valley
County—Chambers
Parts:
Lanett CCD
Langdale CCD
Low Inc—Walker Co
County—Walker
Parts:
Low Inc—Walker

PRIMARY MEDICAL CARE: Alabama
Facility Listing

Facility Name

FCI Talladega
County—Talladega

PRIMARY MEDICAL CARE: Alaska
Census Area Listing

Census Area Name

*Aleutians East Borough
*Aleutians West Borough
Anchorage Borough
Population Group: Low Inc—N. Anchorage City
*Bethel Area
*Bristol Bay Borough
*Denali Borough
*Fairbanks North Star Boro
Population Group: Low Inc—Fairbanks North Star Boro
*Lake And Peninsula Borough
*Matanuska-Susitna Borough
Service Area: Talkeetna/Trapper Creek
*Nome Area
Service Area: Norton Sound
*North Slope Borough
*Northwest Arctic Borough
*Prince Of Wales-Outer Ket
*Skagway-Hoonah-Angoon Borough
*Southeast Fairbanks
*Wade Hampton Borough

PRIMARY MEDICAL CARE: Alaska
Census Area Listing

Census Area Name

*Yakutat Borough
*Yukon-Koyukuk

PRIMARY MEDICAL CARE: Alaska
Service Area Listing

Service Area Name

Norton Sound
  Census Area—Nome Area
    Parts:
      C.T. 9510
Talkeetna/Trapper Creek
  Census Area—Matanuska-Susitna Borough
    Parts:
      C.T. 9743–9745

PRIMARY MEDICAL CARE: Alaska
Population Group Listing

Population Group

Low Inc—Fairbanks North Star Boro 4
  Census Area—Fairbanks North Star Boro
    Parts:
      Low Income
Low Inc—N. Anchorage City
  Census Area—Anchorage Borough
    Parts:
      C.T. 6
      C.T. 7.01–7.03
      C.T. 8.01–8.02
      C.T. 9.01–9.02
      C.T. 10–11
      C.T. 14–16
      C.T. 19–21
      C.T. 22.02

PRIMARY MEDICAL CARE: Arizona
County Listing

County Name

*Apache
  Service Area: Ganado
  Service Area: Sanders
  Service Area: Tsaile
  Population Group: Low Inc—St Johns/Springerville
*Cochise
  Service Area: Elfrida
  Service Area: Tombstone
  Population Group: Low Inc—Bowie/Wilcox
  Population Group: Low Inc—Douglas
  Population Group: Low Inc—Bisbee
*Coconino
  Service Area: Grand Canyon Village
  Service Area: Kanab/Fredonia (UT/AZ)
  Service Area: Page/Tuba City
*Gila
  Service Area: Young
*Greenlee
  Population Group: Low Inc—Greenlee
*La Paz
Maricopa
  Service Area: Gila Bend
  Service Area: Guadalupe
  Service Area: Wickenburg
  Population Group: Low Inc—Avondale/Tolleson
  Population Group: Low Inc—South Mountain
  Population Group: Low Inc—South Central Phoenix

PRIMARY MEDICAL CARE: Arizona
County Listing

County Name

  Population Group: Low Inc/MFW—Buckeye
  Population Group: Low Inc/MFW—El Mirage
  Facility: FCI Phoenix
  Facility: Maricopa Co Jails
Mohave
  Service Area: Dolan Springs
  Service Area: Mohave North
  Service Area: Needles/Topock (CA/AZ)
*Navajo
  Service Area: Heber/Overgaard
  Service Area: Hopi
  Population Group: Low Inc—Holbrook
  Population Group: Low Inc—Winslow
Pima
  Service Area: Arivaca
  Service Area: Continental
  Population Group: Low Inc—Ajo
  Population Group: Low Inc—Marana
  Population Group: Low Inc—South Tucson
  Facility: Child. Rehab. Cl—PC Clinic
  Facility: FCI Tucson
Pinal
  Service Area: San Pedro Valley
  Population Group: Low Inc—Superior
  Population Group: Low Inc/MFW—Central/West Pinal
  Facility: INS Med Fac—Florence
*Santa Cruz
*Yavapai
  Service Area: Ash Fork
  Service Area: Cordes Junction
  Service Area: Yavapai—South
Yuma
  Service Area: Somerton
  Service Area: Wellton/Mohawk

PRIMARY MEDICAL CARE: Arizona
Service Area Listing

Service Area Name

Arivaca
  County—Pima
    Parts:
      C.T. 43.05
Ash Fork
  County—Yavapai
    Parts:
      C.T. 1
Continental
  County—Pima
    Parts:
      C.T. 41.02
Cordes Junction
  County—Yavapai
    Parts:
      C.T. 15
Dolan Springs
  County—Mohave
    Parts:
      C.T. 9502
      C.T. 9504–9505
Elfrida
  County—Cochise
    Parts:
      C.T. 5
Ganado
  County—Apache
    Parts:
      C.T. 9776–9778
Gila Bend
  County—Maricopa

PRIMARY MEDICAL CARE: Arizona
Service Area Listing

Service Area Name

    Parts:
      C.T. 7233
Grand Canyon Village
  County—Coconino
    Parts:
      C.T. 17–19
Guadalupe
  County—Maricopa
    Parts:
      C.T. 3200.02
Heber/Overgaard
  County—Navajo
    Parts:
      C.T. 9607
Hopi
  County—Navajo
    Parts:
      C.T. 9650–9653
      C.T. 9674
      C.T. 9676
Kanab/Fredonia (UT/AZ)
  County—Coconino
    Parts:
      Kaibab Division
Mohave North
  County—Mohave
    Parts:
      Mohave North Division
Needles/Topock (CA/AZ)
  County—Mohave
    Parts:
      C.T. 9521
Page/Tuba City
  County—Coconino
    Parts:
      C.T. 21–25
San Pedro Valley
  County—Pinal
    Parts:
      San Manuel Division
Sanders
  County—Apache
    Parts:
      C.T. 9701
Somerton
  County—Yuma
    Parts:
      C.T. 114–116
Tombstone
  County—Cochise
    Parts:
      C.T. 4
Tsaile
  County—Apache
    Parts:
      C.T. 9772–9775
Wellton/Mohawk
  County—Yuma
    Parts:
      Wellton Division
Wickenburg
  County—Maricopa
    Parts:
      C.T. 405.02
      C.T. 405.09
Yavapai—South
  County—Yavapai
    Parts:
      C.T. 14
Young
  County—Gila

PRIMARY MEDICAL CARE: Arizona
Service Area Listing

Service Area Name

Parts:
C.T. 9806–9807

PRIMARY MEDICAL CARE: Arizona
Population Group Listing

Population Group

Low Inc—Ajo 2
County—Pima
Parts:
C.T. 49–50
Low Inc—Avondale/Tolleson
County—Maricopa
Parts:
C.T. 610.03–610.05
C.T. 612–614
C.T. 821
C.T. 822.01–822.02
Low Inc—Bisbee
County—Cochise
Parts:
C.T. 10–12
C.T. 19–21
Low Inc—Bowie/Wilcox
County—Cochise
Parts:
C.T. 1–2
Low Inc—Douglas
County—Cochise
Parts:
Douglas Division
Low Inc—Greenlee
County—Greenlee
Parts:
Low Income
Low Inc—Holbrook
County—Navajo
Parts:
C.T. 9601–9603
Low Inc—Marana
County—Pima
Parts:
C.T. 44.08–44.09
Low Inc—South Central Phoenix
County—Maricopa
Parts:
C.T. 1115–1124
C.T. 1126–1151
Low Inc—South Mountain
County—Maricopa
Parts:
C.T. 1152–1161
C.T. 1162.02–1162.04
C.T. 1163–1165
C.T. 1166.01–1166.02
C.T. 1167.02–1167.04
Low Inc—South Tucson
County—Pima
Parts:
C.T. 1–12
C.T. 13.01–13.02
C.T. 14
C.T. 20–24
C.T. 25.01–25.02
C.T. 37.01–37.03
C.T. 38–39
C.T. 41.03–41.04
C.T. 43.01
C.T. 43.09
Low Inc—St Johns/Springerville
County—Apache
Parts:

PRIMARY MEDICAL CARE: Arizona
Population Group Listing

Population Group

C.T. 9702–9705
Low Inc—Superior
County—Pinal
Parts:
Census Tract 2.00
Census Tract 4.00
Low Inc—Winslow
County—Navajo
Parts:
C.T. 9604–9606
Low Inc/MFW—Buckeye
County—Maricopa
Parts:
C.T. 506–507
Low Inc/MFW—Central/West Pinal
County—Pinal
Parts:
C.T. 8–17
C.T. 19–21
Low Inc/MFW—El Mirage
County—Maricopa
Parts:
C.T. 608–609
C.T. 610.06–610.08

PRIMARY MEDICAL CARE: Arizona
Facility Listing

Facility Name

Child. Rehab. Cl—PC Clinic 1
County—Pima
FCI Phoenix
County—Maricopa
FCI Tucson
County—Pima
INS Med Fac—Florence
County—Pinal
Maricopa Co Jails
County—Maricopa

PRIMARY MEDICAL CARE: Arkansas
County Listing

County Name

*Ashley
Service Area: Portland/Wilmot
*Boone
Service Area: Lead Hill
*Bradley
Service Area: Hermitage
*Calhoun
*Chicot
Population Group: Low Inc—Dermott/Mcgehee
Population Group: Low Inc—Eudora/Lake Village
Facility: Cummins Correctional Unit
Facility: Delta Correctional Unit
*Clay
*Cleburne
Population Group: Low Inc—Cleburne
*Cleveland
Crawford
Service Area: Mountainburg
*Cross
*Dallas
Service Area: Bearden
Service Area: Carthage
Service Area: Sparkman
*Desha
Service Area: Snow Lake
Population Group: Low Inc—Dermott/Mcgehee

PRIMARY MEDICAL CARE: Arkansas
County Listing

County Name

*Drew
Population Group: Low Inc—Dermott/Mcgehee
Faulkner
Service Area: California
*Fulton
Service Area: Mammoth Spring
*Grant
*Howard
Service Area: Umpire
Jefferson
Service Area: Altheimer
Service Area: Central Pine Bluff
Service Area: North Pine Bluff
Service Area: Redfield
Service Area: Richland
*Johnson
Service Area: Oark
*Lafayette
*Lawrence
*Lincoln
*Logan
Lonoke
*Madison
*Marion
Service Area: Lead Hill
*Monroe
*Montgomery
*Nevada
*Newton
*Ouachita
Service Area: Bearden
Service Area: Reader
Service Area: Stephens
*Perry
*Phillips
*Poinsett
Service Area: Harrisburg
Population Group: Low Inc—Marked Tree
*Polk
Service Area: Grannis/Wickes
*Pope
Service Area: Hector
*Prairie
Pulaski
Service Area: College Station
Service Area: East Little Rock
*Randolph
*Scott
*Searcy
*St Francis
*Stone
*Union
Service Area: Strong
*Van Buren
Washington
Service Area: West Washington
*Woodruff
*Yell
Service Area: Havana

PRIMARY MEDICAL CARE: Arkansas
Service Area Listing

Service Area Name

Altheimer
County—Jefferson
Parts:
C.T. 1.85
C.T. 7
Bearden
County—Dallas

PRIMARY MEDICAL CARE: Arkansas
Service Area Listing

Service Area Name

Parts:
Holly Springs Township
County—Ouachita
Parts:
Carroll Township
Cleveland Township
Freeo Township
Union Township
Valley Township
California
County—Faulkner
Parts:
Benton Township
California Township
Enola Township
Matthews Township
Mount Vernon Township
Mountain Township
Walker Township
Carthage
County—Dallas
Parts:
Chester Township
Smith Township
Willow Township
Central Pine Bluff
County—Jefferson
Parts:
C.T. 10–13
C.T. 14.02
C.T. 16–17
College Station
County—Pulaski
Parts:
C.T. 40.01
C.T. 40.03
C.T. 40.05
East Little Rock
County—Pulaski
Parts:
C.T. 2
C.T. 4–5
Grannis/Wickes
County—Polk
Parts:
Ozark Township
White Township
Harrisburg
County—Poinsett
Parts:
Bolivar Township
Owen Township
Scott Township
Havana
County—Yell
Parts:
Bluffton Township
Briggsville Township
Crawford Township
Dutch Creek Township
Gravelly Hill Township
Herring Township
Ions Creek Township
Richland Township
Riley Township
Waveland Township
Hector
County—Pope
Parts:
Center Township
Freeman Township
Griffin Township

PRIMARY MEDICAL CARE: Arkansas
Service Area Listing

Service Area Name

Jackson Township
Liberty Township
Martin Township
Phoenix Township
Smyrna Township
Hermitage
County—Bradley
Parts:
Eagle Township
Marion Township
Ouachita Township
Palestine Township
River Township
Sumpter Township
Washington Township
Lead Hill
County—Boone
Parts:
Sugar Loaf Township
County—Marion
Parts:
Crockett Township
Franklin Township
Keesee Township
Sugarloaf Township
Mammoth Spring
County—Fulton
Parts:
Afton Township
Mammoth Spring Township
Myatt Township
Wilson Township
Mountainburg
County—Crawford
Parts:
Bidville Township
Chester Township
Locke Township
Mountainburg Township
Porter Township
Upper Township
Whitley Township
Winfrey Township
North Pine Bluff
County—Jefferson
Parts:
C.T. 5.02
C.T. 6
C.T. 6.99
Oark
County—Johnson
Parts:
Batson Township
Dickerson Township
Hill Township
Low Gap Township
Mulberry Township
Portland/Wilmot
County—Ashley
Parts:
Banner Township
Bayou Township
Bearhouse Township
Beech Creek Township
De Bastrop Township
Montrose Township
Portland Township
Prairie Township
Union Township
Wilmot Township
Reader
County—Ouachita

PRIMARY MEDICAL CARE: Arkansas
Service Area Listing

Service Area Name

Parts:
Behestian Township
Red Hill Township
Redfield
County—Jefferson
Parts:
Barraque Township
Bolivar Township
Jefferson Township
Pastoria Township
Richland
County—Jefferson
Parts:
C.T. 8
Snow Lake
County—Desha
Parts:
Mississippi Township
Sparkman
County—Dallas
Parts:
Manchester Township
Nix Township
Owen Township
Stephens
County—Ouachita
Parts:
Jefferson Township
Liberty Township
Smackover Township
Strong
County—Union
Parts:
Harrison Township
Lapile Township
Umpire
County—Howard
Parts:
Burg Township
Clay Township
Duckett Township
Mountain Township
Umpire Township
West Washington
County—Washington
Parts:
District No. 10 Township
District No. 11 Township

PRIMARY MEDICAL CARE: Arkansas
Population Group Listing

Population Group

Low Inc—Cleburne
County—Cleburne
Parts:
Low Income
Low Inc—Dermott/Mcgehee
County—Chicot
Parts:
Bowie Twp
County—Desha
Parts:
Bowie Twp
Clayton Twp
Franklin Twp
Halley Twp
Richland Twp
County—Drew
Parts:
Bartholomew Twp
Collins Twp

PRIMARY MEDICAL CARE: Arkansas
Population Group Listing

Population Group

Franklin Twp
Low Inc—Eudora/Lake Village
County—Chicot
Parts:
Carlton Twp
Planters Twp
Low Inc—Marked Tree
County—Poinsett
Parts:
Greenwood Twp
Little River Twp
Tyronza Twp

PRIMARY MEDICAL CARE: Arkansas
Facility Listing

Facility Name

Cummins Correctional Unit
County—Chicot
Delta Correctional Unit
County—Chicot

PRIMARY MEDICAL CARE: California
County Listing

County Name

Alameda
Service Area: Oakland South (MSSA 2d)
Butte
Service Area: Feather Falls (MSSA 11)
Population Group: Low Inc—Biggs/Gridley
*Calaveras
Population Group: Low Inc—West Point/Wilseyville
Population Group: Low Inc—San Andreas (MSSA 13)
Population Group: Low Inc—Angels (MSSA 12)
*Colusa
Contra Costa
Population Group: Low Inc—Antioch N./Pittsburg N.(MSSA18d)
*Del Norte
Population Group: Low Inc—Del Norte Co (MSSA 19)
El Dorado
Service Area: N. El Dorado Co
Service Area: Pollock Pines (MSSA 23.2)
Fresno
Service Area: Kerman (MSSA 29)
Service Area: Mendota (MSSA 25)
Service Area: San Joaquin-Tranquility (MSSA 26)
Service Area: Selma (MSSA 33)
Population Group: Low Inc—Edison/Easton
Population Group: Low Inc—Reedley/Parlier/Orange
Facility: Kingsburg Hosp-Pc Clinic (MSSA 33)
Facility: Valley Medical Center
*Glenn
Population Group: Low Inc—Willows (MSSA 37)
*Humboldt
Service Area: Ferndale (MSSA 41)
Service Area: Garberville (MSSA 44)
Service Area: Rio Dell/Scotia (MSSA 43)
Service Area: Willow Creek (MSSA 38)
*Imperial
Service Area: Brawley/Calipatria (MSSA 50/51)
Service Area: Calexico (MSSA 49)

PRIMARY MEDICAL CARE: California
County Listing

County Name

Service Area: East Imperial (MSSA 47)
Service Area: El Centro (MSSA 48)
Population Group: Low Inc—W. Imperial (MSSA 52)
Facility: INS Med Fac—El Centro
*Inyo
Service Area: Lone Pine
Population Group: Low Inc—Bishop (MSSA 53)
Kern
Service Area: Arvin/Lamont (MSSA 61)
Service Area: Buttonwillow (MSSA 59)
Service Area: Frazier Park (MSSA 57.1)
Service Area: SE Kern (MSSA 65)
Service Area: Taft (MSSA 57.2)
Service Area: Tehachapi (MSSA 62)
Service Area: Wasco/Shafter (MSSA 58)
Population Group: Low Inc—Lake Isabella (MSSA 63)
Population Group: Low Inc—E Bakersfield (MSSA 66b)
Population Group: Low Inc/MFW—Delano/Mcfarland (MSSA 60)
*Kings
Service Area: Corcoran (MSSA 68)
Population Group: Low Inc—Hanford/Lemoore (MSSA 69.2)
*Lake
Population Group: Low Inc/MFW—Lakeport (MSSA 70)
*Lassen
Service Area: Big Valley
Population Group: Low Inc—Susanville
Los Angeles
Service Area: El Monte (MSSA 78.2oo)
Service Area: Huntington Park (MSSA 78.2ccc)
Service Area: Santa Catalina Island (MSSA 78.1)
Population Group: Low Inc—S. Central Ne (MSSA 78.2ggg)
Population Group: Low Inc—Exposition Pk (MSSA 78.2l)
Population Group: Low Inc—Van Nuys Central (MSSA 78.2cc)
Population Group: Low Inc—Pico Rivera S (MSSA 78.2ww)
Population Group: Low Inc—E Los Angeles (MSSA 78.2d)
Population Group: Low Inc—North Hollywood (MSSA 78.2bb)
Population Group: Low Inc—Bell (MSSA 78.2ddd)
Population Group: Low Inc—E San Pedro/Long Beach (78.2p)
Population Group: Low Inc—Venice/South Santa Monica
Population Group: Low Inc—Highland Park (78.2i)
Population Group: Low Inc—Bell Garden(MSSA 78.2c)
Facility: FCI Terminal Island
Facility: Harbor-UCLa Med Ctr Ambulatory Clinics
Facility: INS Med Fac—San Pedro
Facility: Long Beach Comprehensive Hlth Ctr
Facility: Los Angeles. Mission Comm. Clinic
Facility: UHP Compton Medical Center
Facility: Watts Health Center (MSSA 78.2aaa)

PRIMARY MEDICAL CARE: California
County Listing

County Name

Madera
Service Area: Chowchilla
Service Area: Madera West/Southwest (MSSA 80)
Facility: Family Health Care Clinic
Marin
Service Area: Bolinas/Stinson Beach
*Mariposa
Service Area: Mariposa/Coulterville
*Mendocino
Service Area: Boonville/Navarro/Philo/Yorkville
Service Area: Covelo
Facility: Redwood Coast Med Srvcs
Merced
Population Group: Low Inc/MFW—Dos Palos/Los Banos
*Modoc
Service Area: Big Valley
Service Area: Surprise Valley
Population Group: Low Inc—Alturas Div (MSSA 98)
Monterey
Service Area: Gonzales/Greenfield/Soledad
Service Area: King City
Population Group: Low Inc—Pajaro (MSSA 184.2)
Facility: Natividad Prof Plaza-Alvin Drive
Facility: Natividad Family Hlth-Blanco Circle
Orange
Population Group: Low Inc—C. Santa Ana (MSSA 116b)
Placer
Service Area: Colfax (MSSA 118.1)
Service Area: Foresthill/Back Country
Facility: Placer Co Medical Clinic
Riverside
Population Group: Low Inc—Palm Desert (MSSA 129.1a)
*San Benito
Service Area: San Benito/Bitterwater
Population Group: Low Inc—Hollister (MSSA 140)
San Bernardino
Service Area: Argus/Trona (MSSA 142)
Service Area: Lake Arrowhead (MSSA 147)
Service Area: Needles/Topock (CA/AZ)
Service Area: 29 Palms/Yucca Valley
Population Group: Low Inc—Fontana East (MSSA 151f)
Population Group: Low Inc—Big Bear Lake(MSSA 146)
San Diego
Service Area: Borrego Springs
Service Area: Julian/Pine Valley (MSSA 154)
Service Area: Mountain Empire
Population Group: Low Inc—G. Hills/L. Hghts (MSSA 161c)
Population Group: Low Inc—San Ysidro
Population Group: Low Inc—Fallbrook (MSSA 160)
Population Group: Low Inc—Oceanside W/Carlsbad W
Population Group: Low Inc—Vista East/San Marcos North
Population Group: Low Inc—City Heights (MSSA 161d)
San Joaquin

PRIMARY MEDICAL CARE: California
County Listing

County Name

Service Area: South And East Stockton (MSSA 169b)
Population Group: Low Inc—Escalon/Manteca/Ripon
San Luis Obispo
Population Group: Low Inc—Paso Robles (MSSA 173)
Population Group: Low Inc/MFW—Arroyo Grande (MSSA 171)
Santa Barbara
Service Area: Guadalupe
Facility: USP Lompoc
Shasta
Service Area: Central Shasta (MSSA 188)
Service Area: E Shasta (MSSA 190)
Service Area: Sacramento Canyon (MSSA 187)
Service Area: SW Shasta (MSSA 186)
Population Group: Low Inc—S Redding (MSSA 189.1)
Facility: Shasta Pc Clinic (MSSA 189.2)
*Sierra
Service Area: Downieville
*Siskiyou
Service Area: Butte Valley/Dorris
Service Area: Etna/Ft. Jones
Service Area: Happy Camp
Service Area: McCloud-Medicine Lake
Service Area: Tule Lake (MSSA 101.1)
Population Group: Low Inc—Yreka (MSSA 195)
Sonoma
Service Area: Cloverdale
Service Area: Guerneville
Service Area: Petaluma (MSSA 209)
Service Area: Sonoma Valley (MSSA 208)
Stanislaus
Service Area: Newman/Patterson (MSSA 213)
Population Group: Low Inc—Oakdale (MSSA 211)
Population Group: Low Inc—Hughson (MSSA 214)
Population Group: Low Inc—Turlock (MSSA 212)
Sutter
Population Group: Low Inc—South Sutter (MSSA 217)
Population Group: Low Inc—Meridian/Robbins (MSSA 216)
Population Group: Low Inc—Live Oak (MSSA 9.2)
*Tehama
Service Area: Corning/SW East Tehama/Las Molinas
Population Group: Low Inc—Red Bluff (MSSA 221)
*Trinity
Service Area: Hayfork/Forest Glen/Peanut (MSSA 225)
Service Area: Lower Trinity/Helena/Salyer
Service Area: Mad River/Ruth/Zenia (MSSA 226)
Tulare
Service Area: Earlimart
Service Area: Porterville
Service Area: Woodlake/Three Rivers (MSSA 229)
Population Group: Low Inc—Lindsay (MSSA 228)
Population Group: Low Inc—Cutler/Orosi/Dinuba

PRIMARY MEDICAL CARE: California
County Listing

County Name

Population Group: Low Inc/MFW—Tulare (MSSA 233b)
Population Group: Low Inc/MFW—Visalia
*Tuolumne
Service Area: Groveland
Service Area: Stanislaus/Yosemite
Ventura
Service Area: Los Padres (MSSA 237)
Population Group: Low Inc—Santa Paula (MSSA 239.1)
Population Group: Low Inc—C. Oxnard (MSSA 241b)
C.T. 1069.99
Yuba
Service Area: Yuba Foothills (MSSA 247)
Population Group: Low Inc—Wheatland (MSSA 248.1)
Population Group: Low Inc—Marysville (MSSA 218.2)

PRIMARY MEDICAL CARE: California
Service Area Listing

Service Area Name

Argus/Trona (MSSA 142)
County—San Bernardino
Parts:
C.T. 89.01
Arvin/Lamont (MSSA 61)
County—Kern
Parts:
C.T. 62–64
Big Valley
County—Lassen
Parts:
Big Valley Division
County—Modoc
Parts:
Adin-Lookout Division
Bolinas/Stinson Beach
County—Marin
Parts:
C.T. 1321–1322
Boonville/Navarro/Philo/Yorkville
County—Mendocino
Parts:
C.T. 112
Borrego Springs
County—San Diego
Parts:
C.T. 210
Brawley/Calipatria (MSSA 50/51)
County—Imperial
Parts:
C.T. 101–107
C.T. 123.02
Butte Valley/Dorris
County—Siskiyou
Parts:
C.T. 2
Buttonwillow (MSSA 59)
County—Kern
Parts:
C.T. 37
Calexico (MSSA 49)
County—Imperial
Parts:
C.T. 119–122
Central Shasta (MSSA 188)
County—Shasta
Parts:
C.T. 126

PRIMARY MEDICAL CARE: California
Service Area Listing

Service Area Name

Chowchilla
County—Madera
Parts:
C.T. 2–3
Cloverdale
County—Sonoma
Parts:
C.T. 1541–1542
Colfax (MSSA 118.1)
County—Placer
Parts:
C.T. 219.01–219.02
C.T. 220.02
Corcoran (MSSA 68)
County—Kings
Parts:
C.T. 13–16
Corning/SW East Tehama/Las Molinas
County—Tehama
Parts:
C.T. 9–11
C.T. 12.98
Covelo
County—Mendocino
Parts:
C.T. 101
Downieville
County—Sierra
Parts:
West Sierra Division
E Shasta (MSSA 190)
County—Shasta
Parts:
C.T. 127
Earlimart
County—Tulare
Parts:
C.T. 32
C.T. 42–44
East Imperial (MSSA 47)
County—Imperial
Parts:
C.T. 124
El Centro (MSSA 48)
County—Imperial
Parts:
C.T. 108–111
C.T. 112.01–112.02
C.T. 113–117
C.T. 118.01–118.03
El Monte (MSSA 78.2oo)
County—Los Angeles
Parts:
C.T. 4323–4324
C.T. 4326–4328
C.T. 4331–4335
C.T. 4337–4340
Etna/Ft. Jones
County—Siskiyou
Parts:
Etna CCD
Fort Jones CCD
Feather Falls (MSSA 11)
County—Butte
Parts:
C.T. 24
Ferndale (MSSA 41)
County—Humboldt
Parts:
C.T. 112
Foresthill/Back Country
County—Placer

PRIMARY MEDICAL CARE: California
Service Area Listing

Service Area Name

Parts:
C.T. 202
Frazier Park (MSSA 57.1)
County—Kern
Parts:
C.T. 33.02
Garberville (MSSA 44)
County—Humboldt
Parts:
C.T. 113
Gonzales/Greenfield/Soledad
County—Monterey
Parts:
C.T. 108.98
C.T. 109
C.T. 111–112
Groveland
County—Tuolumne
Parts:
C.T. 42
Guadalupe
County—Santa Barbara
Parts:
C.T. 25
Guerneville
County—Sonoma
Parts:
C.T. 1537.01–1537.02
C.T. 1543
C.T. 1543.99
Happy Camp
County—Siskiyou
Parts:
C.T. 5
Hayfork/Forest Glen/Peanut(MSSA 225)
County—Trinity
Parts:
C.T. 3.98
Huntington Park (MSSA 78.2ccc)
County—Los Angeles
Parts:
C.T. 2281
C.T. 2281–2282
C.T. 2282–2287
C.T. 2287–2288
C.T. 2288–2289
C.T. 2289
C.T. 2291
C.T. 2291–2294
C.T. 2311
C.T. 2318–2319
C.T. 2328
C.T. 2392–2393
C.T. 2395–2396
C.T. 5325
C.T. 5326.01–5326.02
C.T. 5327–5328
C.T. 5328–5329
C.T. 5329–5330
C.T. 5331.01–5331.02
C.T. 5332
C.T. 5345
C.T. 5347
C.T. 5348.01–5348.02
Julian/Pine Valley (MSSA 154)
County—San Diego
Parts:
C.T. 209.01–209.02
Kerman (MSSA 29)
County—Fresno
Parts:
C.T. 39–41

PRIMARY MEDICAL CARE: California
Service Area Listing

Service Area Name

King City
County—Monterey
Parts:
C.T. 113
C.T. 114.02
Lake Arrowhead (MSSA 147)
County—San Bernardino
Parts:
C.T. 108–110
Lone Pine
County—Inyo
Parts:
C.T. 5–7
Los Padres (MSSA 237)
County—Ventura
Parts:
C.T. 1
Lower Trinity/Helena/Salyer
County—Trinity
Parts:
C.T. 2
Mad River/Ruth/Zenia(MSSA 226)
County—Trinity
Parts:
C.T. 4
Madera West/Southwest (MSSA 80)
County—Madera
Parts:
C.T. 4
C.T. 5.02–5.05
C.T. 6.01–6.02
C.T. 7–10
Mariposa/Coulterville
County—Mariposa
Parts:
Coulterville Division
Mariposa Division
McCloud-Medicine Lake
County—Siskiyou
Parts:
C.T. 12
Mendota (MSSA 25)
County—Fresno
Parts:
C.T. 83
C.T. 84.01–84.02
Mountain Empire
County—San Diego
Parts:
C.T. 211
N. El Dorado Co
County—El Dorado
Parts:
C.T. 306.03
Needles/Topock (CA/AZ)
County—San Bernardino
Parts:
C.T. 105–107
Newman/Patterson (MSSA 213)
County—Stanislaus
Parts:
C.T. 32
C.T. 33.98
C.T. 34.98
C.T. 35
Oakland South (MSSA 2d)
County—Alameda
Parts:
C.T. 4061–4062
C.T. 4065–4066
C.T. 4070–4078
C.T. 4082–4089

PRIMARY MEDICAL CARE: California
Service Area Listing

Service Area Name

C.T. 4095–4098
C.T. 4101–4103
Petaluma (MSSA 209)
County—Sonoma
Parts:
C.T. 1506.01–1506.04
C.T. 1507–1511
C.T. 1512.01–1512.02
C.T. 1513.01–1513.04
Pollock Pines (MSSA 23.2)
County—El Dorado
Parts:
C.T. 314.01–314.03
C.T. 316.98
Porterville
County—Tulare
Parts:
C.T. 27
C.T. 33–41
C.T. 45
Rio Dell/Scotia (MSSA 43)
County—Humboldt
Parts:
C.T. 111
Parts:
C.T. 5990
C.T. 5990–5991
C.T. 5991
Sacramento Canyon (MSSA 187)
County—Shasta
Parts:
C.T. 125
San Benito/Bitterwater
County—San Benito
Parts:
C.T. 8
San Joaquin-Tranquility (MSSA 26)
County—Fresno
Parts:
C.T. 82
Santa Catalina Island (MSSA 78.1)
County—Los Angeles
Parts:
C.T. 5990–5991
Selma (MSSA 33)
County—Fresno
Parts:
C.T. 16–17
C.T. 70.01–70.02
C.T. 71–73
Sonoma Valley (MSSA 208)
County—Sonoma
Parts:
C.T. 1501–1502
C.T. 1503.01–1503.02
C.T. 1504–1505
South And East Stockton (MSSA 169b)
County—San Joaquin
Parts:
C.T. 1–3
C.T. 5–8
C.T. 8.99
C.T. 16–26
C.T. 27.01–27.02
C.T. 28–29
C.T. 36.01–36.02
C.T. 37–39
Stanislaus/Yosemite
County—Tuolumne
Parts:
C.T. 21.98
C.T. 31.98

PRIMARY MEDICAL CARE: California
Service Area Listing

Service Area Name

Surprise Valley
County—Modoc
Parts:
Surprise Valley Division
SE Kern (MSSA 65)
County—Kern
Parts:
C.T. 55.03–55.06
C.T. 56–59
SW Shasta/MSSA 186
County—Shasta
Parts:
C.T. 124
C.T. 128.97–128.98
Taft (MSSA 57.2)
County—Kern
Parts:
C.T. 33.03–33.04
C.T. 34–36
Tehachapi (MSSA 62)
County—Kern
Parts:
C.T. 60.01–60.02
C.T. 61
Tule Lake (MSSA 101.1)
County—Siskiyou
Parts:
C.T. 1
Wasco/Shafter (MSSA 58)
County—Kern
Parts:
C.T. 39–45
Willow Creek (MSSA 38)
County—Humboldt
Parts:
C.T. 101
Woodlake/Three Rivers(MSSA 229)
County—Tulare
Parts:
C.T. 1
C.T. 7
Yuba Foothills (MSSA 247)
County—Yuba
Parts:
C.T. 411
29 Palms/Yucca Valley
County—San Bernardino
Parts:
C.T. 104.02–104.03
C.T. 104.05–104.09

PRIMARY MEDICAL CARE: California
Population Group Listing

Population Group

Low Inc—Alturas Div (MSSA 98) 2
County—Modoc
Parts:
Alturas Division
Low Inc—Angels (MSSA 12)
County—Calaveras
Parts:
C.T. 1
Low Inc—Bell (MSSA 78.2ddd)
County—Los Angeles
Parts:
C.T. 5324
C.T. 5333–5337
C.T. 5338.01–5338.02
C.T. 5343
C.T. 5344.01–5344.02
Low Inc—Big Bear Lake(MSSA 146)

PRIMARY MEDICAL CARE: California
Population Group Listing

Population Group

County—San Bernardino
Parts:
C.T. 111–115
Low Inc—Biggs/Gridley
County—Butte
Parts:
C.T. 34–36
Low Inc—Bishop (MSSA 53)
County—Inyo
Parts:
C.T. 1–4
Low Inc—C. Oxnard (MSSA 241b)
County—Ventura
Parts:
C.T. 30.01–30.02
C.T. 31–32
C.T. 34.01–34.02
C.T. 35
C.T. 37–41
C.T. 44.00–45.02
C.T. 47.01
C.T. 49
C.T. 50.01–50.02
Low Inc—C. Santa Ana (MSSA 116b)
County—Orange
Parts:
C.T. 744.05
C.T. 745.01
C.T. 746.01–746.02
C.T. 747.01–747.02
C.T. 748.01–748.02
C.T. 748.05–748.06
C.T. 749.01–749.02
C.T. 750.01–750.02
C.T. 751
C.T. 752.01–752.02
Low Inc—City Heights (MSSA 161d)
County—San Diego
Parts:
C.T. 14–15
C.T. 22–24
C.T. 25.01–25.02
C.T. 26
C.T. 27.01
C.T. 27.04–27.06
C.T. 34.01
C.T. 42–44
C.T. 53–58
C.T. 58.99–59.00
C.T. 60–61
Low Inc—Cutler/Orosi/Dinuba
County—Tulare
Parts:
C.T. 2
C.T. 3.02
C.T. 3.98
C.T. 4–6
Low Inc—Del Norte Co (MSSA 19)
County—Del Norte
Parts:
Low Income
Low Inc—E Bakersfield (MSSA 66b)
County—Kern
Parts:
C.T. 10
C.T. 11.01–11.03
C.T. 12–15
C.T. 20–22
C.T. 23.01–23.02
C.T. 24–26
C.T. 30
Low Inc—E Los Angeles (MSSA 78.2d)

PRIMARY MEDICAL CARE: California
Population Group Listing

Population Group

County—Los Angeles
Parts:
C.T. 5303–5306
C.T. 5308–5311
C.T. 5312.01–5312.02
C.T. 5313.01–5313.02
C.T. 5315.01–5315.02
C.T. 5316.01–5316.02
C.T. 5317.01–5317.02
Low Inc—E San Pedro/Long Beach (78.2p)
County—Los Angeles
Parts:
C.T. 2941–2949
C.T. 2949.99
C.T. 2951
C.T. 2951.99
C.T. 2961
C.T. 2961.99–2962.00
C.T. 2962.99
C.T. 2971
C.T. 2971.99
C.T. 5727–5729
C.T. 5755–5756
C.T. 5756.99–5757.00
C.T. 5757.99
Low Inc—Edison/Easton
County—Fresno
Parts:
C.T. 2–4
C.T. 7–13
C.T. 15
C.T. 18–20
C.T. 38.01–38.03
C.T. 42.01
Low Inc—Escalon/Manteca/Ripon
County—San Joaquin
Parts:
C.T. 49.01
C.T. 49.98
C.T. 50.01–50.02
C.T. 51.01
C.T. 51.06
C.T. 51.08–51.20
Low Inc—Exposition Pk (MSSA 78.2l)
County—Los Angeles
Parts:
C.T. 2216–2219
C.T. 2226–2227
C.T. 2246–2247
C.T. 2267
C.T. 2284
C.T. 2311–2318
C.T. 2340
C.T. 2342–2343
Low Inc—Fallbrook (MSSA 160)
County—San Diego
Parts:
C.T. 187
C.T. 188.01–188.03
C.T. 189.01–189.02
C.T. 190
Low Inc—Fontana East (MSSA 151f)
County—San Bernardino
Parts:
C.T. 28–34
C.T. 35.01–35.02
C.T. 36.02
C.T. 40
Low Inc—G. Hills/L. Hghts (MSSA 161c)
County—San Diego
Parts:
C.T. 34.02

PRIMARY MEDICAL CARE: California
Population Group Listing

Population Group

C.T. 35–36
C.T. 38
C.T. 38.99–39.00
C.T. 40–41
C.T. 45–50
C.T. 50.99–51.00
C.T. 51.99–52.00
Low Inc—Hanford/Lemoore (MSSA 69.2)
County—Kings
Parts:
C.T. 1–3
C.T. 4.01–4.02
C.T. 5–12
Low Inc—Highland Park (78.2i)
County—Los Angeles
Parts:
C.T. 1831.01–1831.02
C.T. 1832–1833
C.T. 1835–1838
C.T. 1991
C.T. 1992.01–1992.02
C.T. 1993
C.T. 1998
C.T. 2011–2012
C.T. 2013.01–2013.02
C.T. 2014.01–2014.02
C.T. 2015.01–2015.02
C.T. 2016–2017
C.T. 5307
Low Inc—Hollister (MSSA 140)
County—San Benito
Parts:
C.T. 1.98
C.T. 2–7
C.T. 9
Low Inc—Hughson (MSSA 214)
County—Stanislaus
Parts:
C.T. 28
C.T. 29.01–29.02
Low Inc—Lake Isabella (MSSA 63)
County—Kern
Parts:
C.T. 52.01–52.02
Low Inc—Lindsay (MSSA 228)
County—Tulare
Parts:
C.T. 8
C.T. 14–16
C.T. 25–26
C.T. 28
Low Inc—Live Oak (MSSA 9.2)
County—Sutter
Parts:
C.T. 507
Low Inc—Marysville (MSSA 218.2)
County—Yuba
Parts:
C.T. 401–407
C.T. 409.00–409.02
C.T. 410
Low Inc—Meridian/Robbins (MSSA 216)
County—Sutter
Parts:
C.T. 509
Low Inc—North Hollywood (MSSA 78.2bb)
County—Los Angeles
Parts:
C.T. 1224
C.T. 1230
C.T. 1231.02
C.T. 1232.01–1232.02

PRIMARY MEDICAL CARE: California
Population Group Listing

Population Group

C.T. 1233.01
C.T. 1239
C.T. 1241.01–1241.02
C.T. 1242.01–1242.02
C.T. 1243
C.T. 1252–1256
Low Inc—Oakdale (MSSA 211)
County—Stanislaus
Parts:
C.T. 1
C.T. 2.01–2.02
C.T. 42.98
Low Inc—Oceanside W/Carlsbad W
County—San Diego
Parts:
C.T. 178.01
C.T. 178.05
C.T. 179–184
C.T. 185.01
C.T. 185.04
C.T. 186.01
C.T. 186.03
Low Inc—Pajaro (MSSA 184.2)
County—Monterey
Parts:
C.T. 101.98
C.T. 102.02
C.T. 102.01
Low Inc—Palm Desert (MSSA 129.1a)
County—Riverside
Parts:
C.T. 445.01–445.02
C.T. 449.02–449.03
C.T. 450
C.T. 451.02–451.04
C.T. 452.01
Low Inc—Paso Robles (MSSA 173)
County—San Luis Obispo
Parts:
C.T. 100–103
Low Inc—Pico Rivera S (MSSA 78.2ww)
County—Los Angeles
Parts:
C.T. 5007–5009
C.T. 5023–5025
C.T. 5026.01–5026.02
C.T. 5027
C.T. 5029.02
C.T. 5320–5322
Low Inc—Red Bluff (MSSA 221)
County—Tehama
Parts:
C.T. 2
C.T. 4–8
Low Inc—Reedley/Parlier/Orange
County—Fresno
Parts:
C.T. 63
C.T. 65
C.T. 66.01–66.02
C.T. 67
C.T. 68.01–68.02
C.T. 69
Low Inc—S Redding (MSSA 189.1)
County—Shasta
Parts:
C.T. 120–123
Low Inc—S. Central Ne (MSSA 78.2ggg)
County—Los Angeles
Parts:
C.T. 2283
C.T. 2285–2286

PRIMARY MEDICAL CARE: California
Population Group Listing

Population Group

C.T. 2292–2294
C.T. 2319
C.T. 2321
C.T. 2327–2328
C.T. 2371
C.T. 2374–2376
C.T. 2392–2393
Low Inc—San Andreas (MSSA 13)
County—Calaveras
Parts:
C.T. 2–3
Low Inc—San Ysidro
County—San Diego
Parts:
C.T. 100.01–100.05
C.T. 100.07–100.09
C.T. 101.03–101.04
C.T. 101.06–101.09
C.T. 102–105
Low Inc—Santa Paula (MSSA 239.1)
County—Ventura
Parts:
C.T. 4–8
Low Inc—South Sutter (MSSA 217)
County—Sutter
Parts:
C.T. 511
Low Inc—Susanville
County—Lassen
Parts:
C.T. 401 (BNA 004 & 005)
C.T. 402–406
Low Inc—Turlock (MSSA 212)
County—Stanislaus
Parts:
C.T. 36.02–36.05
C.T. 37
C.T. 38.01–38.03
C.T. 39.03–39.07
Low Inc—Van Nuys Central (MSSA 78.2cc)
County—Los Angeles
Parts:
C.T. 1233.02
C.T. 1234–1235
C.T. 1236.01–1236.02
C.T. 1237–1238
C.T. 1271.01–1271.02
C.T. 1272–1274
C.T. 1276.01–1276.02
C.T. 1277
C.T. 1278.01–1278.02
C.T. 1279
C.T. 1281–1282
C.T. 1283.01
Low Inc—Venice/South Santa Monica
County—Los Angeles
Parts:
C.T. 2722
C.T. 2723.02
C.T. 2731–2739
C.T. 2751–2752
C.T. 2755
C.T. 7018.01–7018.02
C.T. 7019–7021
C.T. 7022.01–7022.02
C.T. 7026
C.T. 7028.03
Low Inc—Vista East/San Marcos North
County—San Diego
Parts:
C.T. 192.02–192.04
C.T. 195

PRIMARY MEDICAL CARE: California
Population Group Listing

Population Group

C.T. 196.01–196.02
C.T. 197.02
C.T. 199.02–199.03
C.T. 200.05–200.07
C.T. 200.09
Low Inc—W. Imperial (MSSA 52)
County—Imperial
Parts:
C.T. 0123.01
Low Inc—West Point/Wilseyville
County—Calaveras
Parts:
C.T. 4–5
Low Inc—Wheatland (MSSA 248.1)
County—Yuba
Parts:
C.T. 408
Low Inc—Willows (MSSA 37)
County—Glenn
Parts:
C.T. 103–105
Low Inc—Yreka (MSSA 195)
County—Siskiyou
Parts:
C.T. 0003.00
C.T. 0007.00
Low Inc—Antioch N./Pittsburg N.(MSSA18d)
County—Contra Costa
Parts:
C.T. 3050
C.T. 3071.02
C.T. 3072.01–3072.02
C.T. 3072.04–3072.05
C.T. 3090
C.T. 3100
C.T. 3110
C.T. 3120
C.T. 3132.01–3132.02
C.T. 3141.01–3141.02
C.T. 3142
C.T. 3142.98
C.T. 3552
Low Inc—Bell Garden(MSSA 78.2c)
County—Los Angeles
Parts:
C.T. 5302.01–5302.02
C.T. 5318
C.T. 5319.01–5319.02
C.T. 5323.01–5323.02
C.T. 5339–5342
Low Inc/MFW—Arroyo Grande (MSSA 171)
County—San Luis Obispo
Parts:
C.T. 117–124
Low Inc/MFW—Delano/Mcfarland (MSSA 60)
County—Kern
Parts:
C.T. 46–48
C.T. 49.01–49.02
C.T. 50
Low Inc/MFW—Dos Palos/Los Banos
County—Merced
Parts:
C.T. 21.98
C.T. 22
C.T. 23.01–23.02
C.T. 24
Low Inc/MFW—Lakeport (MSSA 70)
County—Lake
Parts:
C.T. 1–5
C.T. 10

PRIMARY MEDICAL CARE: California
Population Group Listing

Population Group

Low Inc/MFW—Tulare (MSSA 233b)
County—Tulare
Parts:
C.T. 21–22
C.T. 23.01–23.02
C.T. 24
C.T. 29.01–29.02
C.T. 30–31
Low Inc/MFW—Visalia
County—Tulare
Parts:
C.T. 9
C.T. 10.01–10.02
C.T. 11–13
C.T. 17.01–17.02
C.T. 18–19
C.T. 20.01–20.05
C.T. 1069.99
County—Ventura
Parts:
C.T. 2–3

PRIMARY MEDICAL CARE: California
Facility Listing

Facility Name

Family Health Care Clinic 3
County—Madera
FCI Terminal Island
County—Los Angeles
Harbor-UCLA Med Ctr Ambulatory Clinics
County—Los Angeles
INS Med Fac—El Centro
County—Imperial
INS Med Fac—San Pedro
County—Los Angeles
Kingsburg Hosp-Pc Clinic (MSSA 33)
County—Fresno
Long Beach Comprehensive Hlth Ctr
County—Los Angeles
Los Angeles Mission Comm. Clinic
County—Los Angeles
Natividad Family Hlth-Blanco Circle
County—Monterey
Natividad Prof Plaza-Alvin Drive
County—Monterey
Placer Co Medical Clinic
County—Placer
Redwood Coast Med Srvcs
County—Mendocino
Shasta Pc Clinic (MSSA 189.2)
County—Shasta
UHP Compton Medical Center
County—Los Angeles
USP Lompoc
County—Santa Barbara
Valley Medical Center
County—Fresno
Watts Health Center (MSSA 78.2aaa)
County—Los Angeles

PRIMARY MEDICAL CARE: Colorado
County Listing

County Name

Adams
Service Area: Bennett/Strasburg
Service Area: Commerce City
Population Group: Low Inc—Aurora
Population Group: Low Inc—Thornton
Population Group: Low Inc/MFW—Ft. Lupton/Brighton

PRIMARY MEDICAL CARE: Colorado
County Listing

County Name

Arapahoe
Service Area: Bennett/Strasburg
Population Group: Low Inc—Aurora
*Archuleta
*Baca
*Bent
Boulder
Population Group: Low Inc—Boulder City
Population Group: Low Inc/MFW—Ft. Lupton/Brighton
*Chaffee
Facility: Buena Vista Correctional Fac
*Cheyenne
*Clear Creek
*Conejos
Population Group: Low Inc—Conejos Co
*Costilla
*Crowley (g)
Facility: Arkansas Valley Correctional
*Custer
Denver
Service Area: La Casa
Service Area: Montbello
Population Group: Homeless—Downtown Denver
Facility: Denver Reception & Diagnostic Center
Facility: Denver Women's Correctional Facility
*Dolores
Douglas
Facility: FCI Englewood
El Paso
Service Area: Calhan-Yoder
Population Group: Low Income—Colorado Springs
*Elbert
Service Area: Limon/Hugo/Simla
*Fremont
Population Group: Low Inc—Fremont
Facility: Centennial Correctional Facility
Facility: Colorado State Penn
Facility: Colorado Territorial Correctional Facili
Facility: Colorado Women's In Canon City
Facility: Freemont Correctional Facility
Facility: FCI Florence
Facility: USP Florence—Admax
Facility: USP Florence
*Garfield
Service Area: Rifle
*Gilpin
*Hinsdale
*Huerfano
Service Area: Gardner
Population Group: Low Inc—E Huerfano
*Jackson
*Kiowa
Population Group: Low Inc—Kiowa Co
*Lake
*Las Animas
Population Group: Low Inc—Las Animas Co
*Lincoln
Service Area: Limon/Hugo/Simla
Facility: Limon Correctional Facility
*Logan
Service Area: Crook/Fleming
Population Group: Low Inc—W Logan Co
Facility: Sterling Correctional Facility
*Mineral
*Moffat

PRIMARY MEDICAL CARE: Colorado
County Listing

County Name

Service Area: Rangely
*Montezuma
Population Group: Low Inc/MFW—Montezuma Co
*Montrose
Service Area: Nucla/Norwood
Population Group: Low Inc—East Montrose/Ouray
*Morgan
Population Group: Low Inc/MFW—Morgan Co
*Otero
Population Group: Low Inc—Otero Co
*Ouray
Population Group: Low Inc—East Montrose/Ouray
*Park
*Phillips
*Prowers
Pueblo
Population Group: Low Inc—Pueblo Co
Facility: San Carlos Correctional Facility
Facility: Youthful Offenders Services
*Rio Blanco
Service Area: Rangely
*Rio Grande
*Routt
Service Area: Oak Creek/Yampa
*Saguache
Population Group: Low Inc/MFW—Saguache
*San Juan
*San Miguel
Service Area: Nucla/Norwood
*Sedgwick
Service Area: Julesburg (CO/NE)
*Washington
Weld
Population Group: Low Inc/MFW—Ft. Lupton/Brighton
Facility: Platte Valley Youth Services

PRIMARY MEDICAL CARE: Colorado
Service Area Listing

Service Area Name

Bennett/Strasburg
County—Adams
Parts:
East Adams Division
County—Arapahoe
Parts:
East Arapahoe Division
Calhan-Yoder
County—El Paso
Parts:
C.T. 39.01
C.T. 46
Commerce City
County—Adams
Parts:
C.T. 87.03
C.T. 87.05–87.06
C.T. 88.01–88.02
C.T. 89.01
C.T. 89.52
Crook/Fleming
County—Logan
Parts:
Crook Division
Fleming Division
Gardner
County—Huerfano
Parts:
Gardner Division
Julesburg (CO/NE)
County—Sedgwick
La Casa
County—Denver
Parts:
C.T. 2.01–2.02
C.T. 4.01–4.02
C.T. 11.01–11.02
Limon/Hugo/Simla
County—Elbert
Parts:
Agate Division
Simla Division
County—Lincoln
Montbello
County—Denver
Parts:
C.T. 83.04–83.06
C.T. 83.10–83.12
Nucla/Norwood
County—Montrose
Parts:
Nucla Division
County—San Miguel
Parts:
Norwood Division
Oak Creek/Yampa
County—Routt
Parts:
Oak Creek Division
Yampa Division
Rangely
County—Moffat
Parts:
Artesia Division
County—Rio Blanco
Parts:
Rangely Division
Rifle
County—Garfield
Parts:
Grand Valley Division
New Castle Division
Rifle Division

PRIMARY MEDICAL CARE: Colorado
Population Group Listing

Population Group

Homeless—Downtown Denver
County—Denver
Parts:
C.T. 16
C.T. 20
C.T. 24.01–24.02
C.T. 25
C.T. 26.01–26.02
C.T. 27.01–27.03
Low Inc—Aurora
County—Adams
Parts:
C.T. 78–82
C.T. 83.08–83.09
County—Arapahoe
Parts:
C.T. 70.07–70.08
C.T. 72
C.T. 72.89
C.T. 73–76
Low Inc—Boulder City
County—Boulder
Parts:
C.T. 121.01–121.02
C.T. 122.02–122.05
C.T. 123
C.T. 124.01
C.T. 126.02
C.T. 126.04
Low Inc—Conejos Co
County—Conejos
Parts:
Low Income
Low Inc—E Huerfano
County—Huerfano
Parts:
La Veta
Walsenburg
Low Inc—East Montrose/Ouray
County—Montrose
Parts:
Montrose CCD
Olathe CCD
County—Ouray
Parts:
Low Income
Low Inc—Fremont
County—Fremont
Parts:
Low Income
Low Inc—Kiowa Co
County—Kiowa
Parts:
Low Income
Low Inc—Las Animas Co
County—Las Animas
Parts:
Low Income
Low Inc—Otero Co
County—Otero
Parts:
Low Income
Low Inc—Pueblo Co
County—Pueblo
Parts:
Low Income
Low Inc—Thornton
County—Adams
Parts:
C.T. 90.01–90.03
C.T. 91.01–91.02
C.T. 92.01–92.03
C.T. 93.04
C.T. 93.06–93.10
C.T. 93.14–93.18
C.T. 94.01
C.T. 94.07
C.T. 95.01–95.02
C.T. 95.53
C.T. 96.03–96.06
C.T. 97.50
Low Inc—W Logan Co
County—Logan
Parts:
Low Income
Low Inc/MFW—Ft. Lupton/Brighton
County—Adams
Parts:
C.T. 85.12–85.14
C.T. 86.01–86.02
County—Boulder
Parts:

PRIMARY MEDICAL CARE: Colorado
Population Group Listing

Population Group

C.T. 128
C.T. 132.01
C.T. 132.04
C.T. 133.02–133.08
C.T. 134.01–134.02
C.T. 135.01–135.04
County—Weld
Parts:
Low Inc/MSFW
Low Inc/MFW—Montezuma Co
County—Montezuma
Parts:
Low Income
Low Inc/MFW—Morgan Co
County—Morgan
Parts:
Low Income
Low Inc/MFW—Saguache
County—Saguache
Parts:
Low Income/MFW
Low Income—Colorado Springs
County—El Paso
Parts:
C.T. 13.01
C.T. 14–17
C.T. 21.01–21.02
C.T. 22–23
C.T. 26–29
C.T. 33.02
C.T. 45.01
C.T. 52–54

PRIMARY MEDICAL CARE: Colorado
Facility Listing

Facility Name

Arkansas Valley Correctional 2
County—Crowley
Buena Vista Correctional Fac
County—Chaffee
Centennial Correctional Facility
County—Fremont
Colorado State Penn
County—Fremont
Colorado Territorial Correctional Facili
County—Fremont
Colorado Women's In Canon City
County—Fremont
Denver Reception & Diagnostic Center
County—Denver
Denver Women's Correctional Facility
County—Denver
Freemont Correctional Facility
County—Fremont
FCI Englewood
County—Douglas
FCI Florence
County—Fremont
Limon Correctional Facility
County—Lincoln
Platte Valley Youth Services
County—Weld
San Carlos Correctional Facility
County—Pueblo
Sterling Correctional Facility
County—Logan
USP Florence
County—Fremont
USP Florence—Admax
County—Fremont
Youthful Offenders Services
County—Pueblo

PRIMARY MEDICAL CARE: Connecticut
County Listing

County Name

Fairfield
Service Area: Central Norwalk
Service Area: Central/East Bridgeport
Service Area: Southwest Bridgeport
Population Group: Low Inc—Danbury
Population Group: Low-Inc South End Stamford
Population Group: Low-Income Stratford
Hartford
Service Area: Charter Oak/Frog Hollow/Parkville/Barry
Service Area: North-Central Hartford
Population Group: Low Inc—East Hartford
Population Group: Low Inc—Central New Britain
Facility: CT Child Med Ctr—PC Ctr
New Haven
Service Area: Central Waterbury
Service Area: Fair Haven
Population Group: Low Inc—Central New Haven
Population Group: Low Inc—Ansonia
Population Group: Low Income—Central Meriden
New London
Service Area: Central Groton
Population Group: Low Inc—Norwich
Population Group: Low Inc—Central New London
Tolland
Population Group: Low Inc—Rockville
Windham
Population Group: Low Inc—Town Of Windham

PRIMARY MEDICAL CARE: Connecticut
Service Area Listing

Service Area Name

Central Groton
County—New London
Parts:
C.T. 7022–7023
C.T. 7025
C.T. 7027–7028
Central Norwalk
County—Fairfield
Parts:
C.T. 440–441
C.T. 444–445
Central Waterbury
County—New Haven
Parts:
C.T. 3501–3508
C.T. 3512
C.T. 3514
C.T. 3517
Central/East Bridgeport
County—Fairfield
Parts:
C.T. 713–717
C.T. 735–736
C.T. 738–744
Charter Oak/Frog Hollow/Parkville/Barry
County—Hartford
Parts:
C.T. 5001–5004
C.T. 5019
C.T. 5027–5030
C.T. 5043
C.T. 5045–5046
C.T. 5049

PRIMARY MEDICAL CARE: Connecticut
Service Area Listing

Service Area Name

Fair Haven
County—New Haven
Parts:
C.T. 1421
C.T. 1423–1425
C.T. 1426.02
North–Central Hartford
County—Hartford
Parts:
C.T. 5005
C.T. 5008–5018
C.T. 5020–5022
C.T. 5034–5035
C.T. 5037
Southwest Bridgeport
County—Fairfield
Parts:
C.T. 702–712

PRIMARY MEDICAL CARE: Connecticut
Population Group Listing

Population Group

Low Inc—Ansonia 3
County—New Haven
Parts:
C.T. 1252–1254
Low Inc—Central New Britain
County—Hartford
Parts:
C.T. 4159
C.T. 4161–4162
C.T. 4171
Low Inc—Central New Haven
County—New Haven
Parts:
C.T. 1401–1409
C.T. 1413–1417
C.T. 1544–1545
Low Inc—Central New London
County—New London
Parts:
C.T. 6901
C.T. 6903–6906
C.T. 6906.99–6907.00
C.T. 6907.99
Low Inc—Danbury
County—Fairfield
Parts:
C.T. 2101–2102
Low Inc—East Hartford
County—Hartford
Parts:
C.T. 5102–5104
C.T. 5106
Low Inc—Norwich
County—New London
Parts:
C.T. 6961
C.T. 6964–6970
Low Inc—Rockville
County—Tolland
Parts:
C.T. 5301–5302
Low Inc—Town Of Windham
County—Windham
Parts:
Windham Town
Low Income—Central Meriden
County—New Haven
Parts:
C.T. 1701.01–1701.02

PRIMARY MEDICAL CARE: Connecticut
Population Group Listing

County Name

C.T. 1702.01–1702.02
C.T. 1703
C.T. 1710
C.T. 1713–1715
Low-Inc South End Stamford
County—Fairfield
Parts:
C.T. 201
C.T. 214–215
C.T. 222–223
Low-Income Stratford
County—Fairfield
Parts:
C.T. 803–804

PRIMARY MEDICAL CARE: Connecticut
Facility Listing

Facility Name

CT Child Med Ctr—PC Ctr 1
County—Hartford

PRIMARY MEDICAL CARE: Delaware
County Listing

County Name

Kent
Population Group: Low Inc—Milford
New Castle
Service Area: Middletown-Odessa
Service Area: Wilmington—Southbridge
*Sussex
Population Group: Low Inc—Milford

PRIMARY MEDICAL CARE: Delaware
Service Area Listing

Service Area Name

Middletown-Odessa
County—New Castle
Parts:
C.T. 166–169
Wilmington—Southbridge
County—New Castle
Parts:
C.T. 1
C.T. 6.01–6.02
C.T. 7–9
C.T. 15–17
C.T. 19–23
C.T. 154–155

PRIMARY MEDICAL CARE: Delaware
Population Group Listing

Population Group

Low Inc—Milford 1
County—Kent
Parts:
C.T. 424–431
County—Sussex
Parts:
C.T. 501–502
C.T. 508

PRIMARY MEDICAL CARE: District Of Columbia
County Listing

County Name

Dist Of Columbia
Service Area: Anacostia
Service Area: East Capitol St. (Far S.E.)

PRIMARY MEDICAL CARE: District Of Columbia
County Listing

County Name

Service Area: Mt. Pleasant/Upper Cardozo
Service Area: South Capitol
Population Group: Homeless—Downtown Washington
Facility: DC General Ambulatory Care Center

PRIMARY MEDICAL CARE: District Of Columbia
Service Area Listing

Service Area Name

Anacostia
County—Dist Of Columbia
Parts:
C.T. 74.01
C.T. 74.04
C.T. 74.06–74.09
C.T. 74.30
C.T. 75.02–75.04
C.T. 76.01
C.T. 76.05
East Capitol St. (Far S.E.)
County—Dist Of Columbia
Parts:
C.T. 77.03
C.T. 77.07–77.09
C.T. 78.03–78.04
C.T. 78.07–78.09
C.T. 78.60
C.T. 96.02–96.03
C.T. 99.03–99.07
Mt. Pleasant/Upper Cardozo
County—Dist Of Columbia
Parts:
C.T. 25.02
C.T. 27.01–27.02
C.T. 28.01–28.02
C.T. 29–30
C.T. 35–39
C.T. 43
South Capitol
County—Dist Of Columbia
Parts:
C.T. 60.20
C.T. 64.10
C.T. 71–72

PRIMARY MEDICAL CARE: District Of Columbia
Population Group Listing

Population Group

Homeless—Downtown Washington 2
County—Dist Of Columbia
Parts:
C.T. 40.01–40.02
C.T. 41
C.T. 42.02
C.T. 46–47
C.T. 48.01–48.02
C.T. 49.01–49.02
C.T. 50–51
C.T. 52.10
C.T. 52.20
C.T. 53.01–53.02
C.T. 54.01–54.02
C.T. 55.01–55.02
C.T. 56
C.T. 57.01–57.02
C.T. 58–59

PRIMARY MEDICAL CARE: District Of Columbia
Facility Listing

Facility Name

DC General Ambulatory Care Center 4
County—Dist Of Columbia

PRIMARY MEDICAL CARE: Florida
County Listing

County Name

Alachua
Population Group: Low Inc—Alachua Co
Facility: Gainesville Corr Inst
*Baker
Population Group: Low Inc—Baker
Bradford
Brevard
Facility: Brevard Corr Inst
Broward
Population Group: Low Inc—Pompano
Population Group: Low Inc—Central Ft Lauderdale
*Calhoun
Population Group: Low Inc—Calhoun
Facility: Calhoun Corr Inst
Charlotte
Population Group: Low Inc—Charlotte Co
*Citrus
Population Group: Low Inc—Citrus Co
Clay
Service Area: Keystone Heights
Collier
Service Area: Everglades
Service Area: Imokalee
*Columbia
Population Group: Low Inc—Columbia Co
Dade
Service Area: Wynwood
Population Group: Low Inc—North Beach
Population Group: Low Inc—Little Havana
Population Group: Low Inc—South Beach
Population Group: Low Inc—Opa Locka
Population Group: Low Inc—Liberty City
Population Group: Low Inc—Hialeah
Population Group: Low Inc—Golden Glades
Population Group: Low Inc—Homestead
Population Group: Low Inc—West Perrine
Facility: Cape South School-Based HC
Facility: Dade Corr Inst
Facility: Doris Ison Comm Hlth Ctr
Facility: FCI Miami
Facility: Helen B. Bentley Family Health Center
Facility: Jackson Mem Hosp Outpt Clinics
Facility: Krome Medical Referral Center
*De Soto
Population Group: Low Inc/MFW—Desoto Co
Facility: Desoto Corr Inst
*Dixie (g)
Facility: Cross City Corr Inst
Duval
Population Group: Low Inc—N Jacksonville
Escambia
Service Area: Atmore/Century (AL/FL)
Facility: Century Corr Inst
Flagler
Population Group: Low Inc—Flagler
*Franklin
Population Group: Low Inc—Franklin Co
Gadsden
*Gilchrist
Population Group: Low Inc/MFW—Gilchrist

PRIMARY MEDICAL CARE: Florida
County Listing

Population Group

Facility: Lancaster Corr Inst
*Glades
*Gulf
Population Group: Low Inc—Gulf Co
Facility: Gulf Corr Inst
*Hamilton
*Hardee
*Hendry
Service Area: Labelle
Population Group: Low Inc/MFW—Clewiston
Facility: Hendry Corr Inst
*Highlands
Population Group: Low Inc/MFW—Highlands Co
Facility: Avon Park Corr Inst
Hillsborough
Population Group: Low Inc—Suitcase City
Population Group: Low Inc—E Tampa/Ybor City
Population Group: Low Inc/MFW—Ruskin/Appollo Beach
Population Group: Low Inc/MFW—Plant City/Dover
*Holmes (g)
Facility: Holmes Corr Inst
*Indian River
Population Group: Low Inc/MFW-Fellsmere
Facility: Indian River Corr Inst
*Jackson
Population Group: Low Inc—Jackson Co
Facility: Apalachee Corr Inst
Facility: FCI Marianna
Facility: Jackson Corr Inst
*Jefferson
Population Group: Low Inc—Jefferson Co
*Lafayette
Lake
Population Group: Low Inc/MFW—Lake Co.
Lee
Service Area: Dunbar
Population Group: Low Inc—N Cape Coral/Pine Island
Leon
Population Group: Low Inc—Bond Community
*Levy
Population Group: Low Inc/MFW—Levy Co
*Liberty
Population Group: Low Inc—Liberty
Facility: Liberty Corr Inst
*Madison
Manatee
Population Group: Low Inc/MFW—Manatee Co
Marion
Population Group: Low Inc—Marion Co
Facility: Florida Corr Inst
Facility: Marion Corr Inst
Martin
Service Area: Indiantown
Nassau
Population Group: Low Inc/MFW—Nassau
Okaloosa
Population Group: Low Inc/MFW—Okaloosa
Facility: Okaloosa Corr Inst
*Okeechobee
Population Group: Low Inc/MFW—Okeechobee Co
Orange

PRIMARY MEDICAL CARE: Florida
County Listing

Population Group

Population Group: MFW—Orange
Facility: Central Fl Reception Ctr
Osceola
Population Group: Low Inc—Osceola
Palm Beach
Population Group: Low Inc/MFW—Belle Glade/Pahokee
Pasco
Population Group: Low Inc/MFW—Eastern Pasco
Pinellas
Population Group: Low Inc—Inner St. Petersburg
Population Group: Low Inc—C Clearwater
Facility: Pinellas Cty Corr Institution
Polk
Service Area: Frostproof/Lake Wales
Population Group: Low Inc—Haines City
*Putnam
Population Group: Low Inc/MFW—Putnam
Facility: Putnam Corr Inst
Santa Rosa
Population Group: Low Inc—Santa Rosa
Facility: Santa Rosa Corr Inst
Seminole
Population Group: MFW—Sanford Division
St Johns
Population Group: Low Inc/MFW—Hastings
St Lucie
Population Group: Low Inc—Fort Pierce
*Sumter
Population Group: Low Inc/MFW—Sumter Co
Facility: FCC Coleman
*Suwannee
*Taylor
*Union
Population Group: Low Inc—Union
Facility: North Fl Reception Ctr
Volusia
Service Area: Pierson/Seville/Deleon Spring
*Wakulla
*Walton (g)
Facility: Walton Corr Inst
*Washington

PRIMARY MEDICAL CARE: Florida
Service Area Listing

Service Area Name

Atmore/Century (AL/FL)
County—Escambia
Parts:
C.T. 38–40
Dunbar
County—Lee
Parts:
C.T. 5.01–5.02
C.T. 6
Everglades
County—Collier
Parts:
C.T. 111.01–111.02
Frostproof/Lake Wales
County—Polk
Parts:
C.T. 142–144
C.T. 154–158
C.T. 160
C.T. 161.98

PRIMARY MEDICAL CARE: Florida
Service Area Listing

Service Area Name

Imokalee
County—Collier
Parts:
C.T. 112.01–112.03
C.T. 113–114
Indiantown
County—Martin
Parts:
Indiantown Division
Keystone Heights
County—Clay
Parts:
Keystone Heights Division
Labelle
County—Hendry
Parts:
C.T. 9603–9604
Pierson/Seville/Deleon Spring
County—Volusia
Parts:
C.T. 901
Wynwood
County—Dade
Parts:
C.T. 14.01–14.02
C.T. 20.01
C.T. 20.03–20.04
C.T. 21
C.T. 22.01–22.02
C.T. 25–26
C.T. 27.01–27.02
C.T. 28–29

PRIMARY MEDICAL CARE: Florida
Population Group Listing

Population Group

Low Inc—Alachua Co 1
County—Alachua
Parts:
Low Income
Low Inc—Baker
County—Baker
Parts:
Low Income
Low Inc—Bond Community
County—Leon
Parts:
C.T. 1
C.T. 4–6
C.T. 10.01
C.T. 11.01–11.02
C.T. 12–14
Low Inc—C Clearwater
County—Pinellas
Parts:
C.T. 261–264
C.T. 267.01
C.T. 270
C.T. 271.01–271.02
Low Inc—Calhoun
County—Calhoun
Parts:
Low Income
Low Inc—Central Ft Lauderdale
County—Broward
Parts:
C.T. 409–416
C.T. 427–431
C.T. 503.04
C.T. 508
C.T. 803

PRIMARY MEDICAL CARE: Florida
Population Group Listing

Population Group

C.T. 804.01–804.02
Low Inc—Charlotte Co
County—Charlotte
Parts:
Low Income
Low Inc—Citrus Co
County—Citrus
Parts:
Low Income
Low Inc—Columbia Co
County—Columbia
Parts:
Low Income
Low Inc—E Tampa/Ybor City
County—Hillsborough
Parts:
C.T. 10
C.T. 17–19
C.T. 30–44
C.T. 49–51
Low Inc—Flagler
County—Flagler
Parts:
Low Income
Low Inc—Fort Pierce
County—St Lucie
Parts:
C.T. 1
C.T. 1.99–2.00
C.T. 3–5
C.T. 9.02
Low Inc—Franklin Co
County—Franklin
Parts:
Low Income
Low Inc—Golden Glades
County—Dade
Parts:
C.T. 2.04
C.T. 3.01–3.04
C.T. 4.01–4.07
C.T. 11.01–11.03
C.T. 95.01–95.02
Low Inc—Gulf Co
County—Gulf
Parts:
Low-Income
Low Inc—Haines City
County—Polk
Parts:
C.T. 125–127
C.T. 141.00–141.02
Low Inc—Hialeah
County—Dade
Parts:
C.T. 6.03–6.06
C.T. 7.01
C.T. 7.03–7.04
C.T. 8.01–8.02
C.T. 9.01–9.03
C.T. 16.01–16.02
C.T. 17.01
C.T. 92
C.T. 93.02–93.03
C.T. 101.16
Low Inc—Homestead
County—Dade
Parts:
C.T. 104–105
C.T. 106.02
C.T. 107.01–107.02
C.T. 108–109

PRIMARY MEDICAL CARE: Florida
Population Group Listing

Population Group

C.T. 110.01–110.02
C.T. 111
C.T. 112.01–112.02
C.T. 113
C.T. 114.98
Low Inc—Inner St. Petersburg
County—Pinellas
Parts:
C.T. 201.01
C.T. 203.01
C.T. 204–208
C.T. 209.95
C.T. 210.95
C.T. 212–213
C.T. 213.99–214.00
C.T. 215
C.T. 216.95
C.T. 218.95
C.T. 219.95
C.T. 220
C.T. 234–235
Low Inc—Jackson Co
County—Jackson
Parts:
Low Income
Low Inc—Jefferson Co
County—Jefferson
Parts:
Low Income
Low Inc—Liberty
County—Liberty
Parts:
Low Income
Low Inc—Liberty City
County—Dade
Parts:
C.T. 4.08
C.T. 10.01–10.04
C.T. 15.01–15.02
C.T. 17.02
C.T. 18.01–18.03
C.T. 19.01
C.T. 19.03–19.04
C.T. 23
Low Inc—Little Havana
County—Dade
Parts:
C.T. 30.02
C.T. 36.01–36.02
C.T. 49.01–49.02
C.T. 50.01–50.02
C.T. 51
C.T. 52.01–52.02
C.T. 53.01–53.02
C.T. 54.01–54.02
C.T. 55.01–55.02
C.T. 56
C.T. 57.03–57.04
C.T. 58.01
C.T. 62
C.T. 63.01–63.02
C.T. 64.01–64.03
C.T. 65
Low Inc—Marion Co
County—Marion
Parts:
Low Income
Low Inc—N Cape Coral/Pine Island
County—Lee
Parts:
C.T. 103.01–103.02
C.T. 104.01–104.02

PRIMARY MEDICAL CARE: Florida
Population Group Listing

Population Group

C.T. 206–208
C.T. 701–702
Low Inc—N Jacksonville
County—Duval
Parts:
C.T. 1
C.T. 1.99–2.00
C.T. 2.99–3.00
C.T. 3.99–4.00
C.T. 5
C.T. 9–20
C.T. 25–29
C.T. 107–118
C.T. 121
Low Inc—North Beach
County—Dade
Parts:
C.T. 39.01–39.02
C.T. 39.04–39.05
Low Inc—Opa Locka
County—Dade
Parts:
C.T. 5.01–5.03
C.T. 6.01–6.02
C.T. 94
C.T. 100.01–100.02
C.T. 100.05–100.08
Low Inc—Osceola
County—Osceola
Parts:
Low Income
Low Inc—Pompano
County—Broward
Parts:
C.T. 303–306
C.T. 308.01
Low Inc—Santa Rosa
County—Santa Rosa
Parts:
Low Income
Low Inc—South Beach
County—Dade
Parts:
C.T. 42–45
C.T. 45.99
Low Inc—Suitcase City
County—Hillsborough
Parts:
C.T 108.05
C.T. 2–4
C.T. 6–9
C.T. 105
C.T. 108.06–108.07
C.T. 112.06
Low Inc—Union
County—Union
Parts:
Low Income
Low Inc—West Perrine
County—Dade
Parts:
C.T. 83.03
C.T. 101.14
C.T. 102.02–102.03
Low Inc/MFW—Belle Glade/Pahokee
County—Palm Beach
Parts:
C.T. 80.01–80.02
C.T. 81.01–81.02
C.T. 82.01–82.03
C.T. 83.01–83.02
Low Inc/MFW—Clewiston

PRIMARY MEDICAL CARE: Florida
Population Group Listing

Population Group

County—Hendry
Parts:
C.T. 9601–9602
Low Inc/MFW—Desoto Co
County—De Soto
Parts:
Low Income/MFW
Low Inc/MFW—Eastern Pasco
County—Pasco
Parts:
C.T. 320.01–320.02
C.T. 321.01–321.02
C.T. 322–329
C.T. 330.01–330.04
C.T. 331
Low Inc/MFW—Gilchrist
County—Gilchrist
Parts:
Low Income/MFW
Low Inc/MFW—Hastings
County—St Johns
Low Inc/MFW—Highlands Co
County—Highlands
Parts:
Low Income
MFW
Low Inc/MFW—Lake Co.
County—Lake
Parts:
Low Inc/MFW
Low Inc/MFW—Levy Co
County—Levy
Parts:
Low Inc/MFW—Levy
Low Inc/MFW—Manatee Co
County—Manatee
Parts:
C.T. 1.01–1.04
C.T. 2
C.T. 3.01–3.03
C.T. 6.01
C.T. 7.01–7.02
C.T. 13
C.T. 15.01–15.02
C.T. 16
C.T. 19.01
C.T. 19.03–19.04
Low Inc/MFW—Nassau
County—Nassau
Parts:
Low Income/MFW
Low Inc/MFW—Okaloosa
County—Okaloosa
Parts:
Low Income/MFW
Low Inc/MFW—Okeechobee Co
County—Okeechobee
Parts:
Low Inc/MFW—Okeechobee
Low Inc/MFW—Plant City/Dover
County—Hillsborough
Parts:
C.T. 101.02–101.04
C.T. 124–131
Low Inc/MFW—Putnam
County—Putnam
Parts:
Low Income/MFW
Low Inc/MFW—Ruskin/Appollo Beach
County—Hillsborough
Parts:
C.T. 140.02

PRIMARY MEDICAL CARE: Florida
Population Group Listing

Population Group

C.T. 141.01
C.T. 141.03–141.04
Low Inc/MFW—Sumter Co
County—Sumter
Parts:
Low Income/MFW
Low Inc/MFW-Fellsmere
County—Indian River
Parts:
Low Inc/MFW—Fellsmere
MFW—Orange
County—Orange
Parts:
MFW
MFW—Sanford Division
County—Seminole
Parts:
MFW—Sanford

PRIMARY MEDICAL CARE: Florida
Facility Listing

Facility Name

Apalachee Corr Inst
County—Jackson
Avon Park Corr Inst
County—Highlands
Brevard Corr Inst
County—Brevard
Calhoun Corr Inst
County—Calhoun
Cape South School-Based HC
County—Dade
Central Fl Reception Ctr
County—Orange
Century Corr Inst
County—Escambia
Cross City Corr Inst
County—Dixie
Dade Corr Inst
County—Dade
Desoto Corr Inst
County—De Soto
Doris Ison Comm Hlth Ctr
County—Dade
Florida Corr Inst
County—Marion
FCC Coleman
County—Sumter
FCI Marianna
County—Jackson
FCI Miami
County—Dade
Gainesville Corr Inst
County—Alachua
Gulf Corr Inst
County—Gulf
Helen B. Bentley Family Health Center
County—Dade
Hendry Corr Inst
County—Hendry
Holmes Corr Inst
County—Holmes
Indian River Corr Inst
County—Indian River
Jackson Corr Inst
County—Jackson
Jackson Mem Hosp Outpt Clinics
County—Dade
Krome Medical Referral Center
County—Dade
Lancaster Corr Inst

PRIMARY MEDICAL CARE: Florida
Facility Listing

Facility Name

County—Gilchrist
Liberty Corr Inst
County—Liberty
Marion Corr Inst
County—Marion
North Fl Reception Ctr
County—Union
Okaloosa Corr Inst
County—Okaloosa
Pinellas Cty Corr Institution
County—Pinellas
Putnam Corr Inst
County—Putnam
Santa Rosa Corr Inst
County—Santa Rosa
Walton Corr Inst
County—Walton

PRIMARY MEDICAL CARE: Georgia
County Listing

County Name

*Appling
Population Group: Low Inc—Appling
*Atkinson
*Bacon
Population Group: Low Inc—Bacon Co
*Baker
*Baldwin
Population Group: Low Inc—Baldwin
*Banks
Barrow
Population Group: Low Inc—Barrow Co
Bartow
Population Group: Low Inc—Bartow Co
*Ben Hill
Population Group: Low Inc—Ben Hill Co
*Berrien
Population Group: Low Inc—Berrien Co
*Bleckley
Population Group: Low Inc—Bleckley Co
*Brantley
*Brooks
Bryan
Population Group: Low Inc—Pembroke
*Bulloch
Population Group: Low Inc—Bulloch
*Burke
Population Group: Low Inc—Burke Co
*Butts
Population Group: Low Inc—Butts Co
Facility: Ga Diagnostic Prison
*Camden
Service Area: Woodbine
*Candler
Population Group: Low Inc—Candler Co
*Charlton
Population Group: Low Inc—Charlton Co
Chatham
Population Group: Low Inc—N W Savannah
Chattahoochee
Population Group: Low Inc—Chattahoochee
*Chattooga
Cherokee
*Clay
Population Group: Low Inc—Clay
*Clinch
Population Group: Low Inc—Clinch Co
Cobb

PRIMARY MEDICAL CARE: Georgia
County Listing

Population Group: Low Inc—Central Marietta
Facility: Smyrna Health Center
*Colquitt
*Cook
Population Group: Low Inc—Cook
*Crawford
*Crisp
Population Group: Low Inc—Crisp Co
Dade
Population Group: Low Inc—Dade
*Dawson
De Kalb
Service Area: South Decatur/Candler/Mcafee
Population Group: Low Inc—Stone Mtn./Clarkston
Facility: North Dekalb Clinic
*Decatur
Population Group: Low Inc—Decatur Co
*Dodge
Population Group: Low Inc—Dodge Co
Facility: Dodge State Prison
Facility: Eastman Youth Development Campus
*Dooly
Population Group: Low Inc—Dooly Co
Dougherty
Service Area: East Albany
Service Area: South Albany
Douglas
Population Group: Low Inc—Douglasville
*Early
Population Group: Low Inc—Early
*Echols
Effingham
*Elbert
Population Group: Low Inc—Elbert Co
*Emanuel
*Fannin
Population Group: Low Inc—Fannin Co
Forsyth
Facility: Phillips State Prison
*Franklin
Population Group: Low Inc—Franklin Co
Fulton
Service Area: Atlanta/Southside
Service Area: Palmetto
Service Area: West Atlanta
Facility: Central Health Center
Facility: USP—Atlanta
*Gilmer
Population Group: Low Inc—Gilmer Co
*Glascock
*Gordon
Population Group: Low Inc—Gordon
*Grady
Population Group: Low Inc—Grady Co
*Greene
Population Group: Low Inc—Greene
*Habersham
Population Group: Low Inc—Habersham Co
*Hancock
Population Group: Low Inc—Hancock
*Haralson
Population Group: Low Inc—Haralson Co
Harris
*Hart
Population Group: Low Inc—Hart Co
*Heard
Houston
Population Group: Low Inc—Houston Co

PRIMARY MEDICAL CARE: Georgia
County Listing

Jackson
Population Group: Low Inc—Jackson Co
*Jasper
*Jeff Davis
Population Group: Low Inc—Jeff Davis Co
*Jefferson
*Jenkins
Population Group: Low Inc—Jenkins Co
*Johnson
Population Group: Low Inc—Johnson
Facility: Wrightsville Youth Develp Campus
*Lamar
Population Group: Low Inc—Lamar Co
*Lanier
Population Group: Low Inc—Lanier Co
Lee
*Liberty
*Lincoln
Population Group: Low Inc—Lincoln County
*Long
*Lumpkin
Population Group: Low Inc—Lumpkin Co
Madison
Population Group: Low Inc—Madison Co
*Marion
Population Group: Low Inc—Marion Co
McDuffie
Population Group: Low Inc—Mcduffie
*McIntosh
*Meriwether
Population Group: Low Inc—Meriwether
*Miller
Population Group: Low Inc—Miller
*Mitchell
Facility: Pelham Youth Development Campus
*Monroe
*Montgomery
Population Group: Low Inc—Montgomery/Wheeler
*Morgan
Population Group: Low Inc—Morgan Co
*Murray
Population Group: Low Inc—Murray
Muscogee/Columbus
Population Group: Low Inc—Central Muscogee
Newton
Population Group: Low Inc—Newton Co
*Oglethorpe
Paulding
Peach
Population Group: Low Inc—Peach Co
Pickens
Population Group: Low Inc—Pickens Co
*Pierce
Population Group: Low Inc—Pierce Co
*Pike
Population Group: Low Inc—Pike
*Polk
*Putnam
*Quitman
*Rabun
*Randolph
Population Group: Low Inc—Randolph Co
Richmond
Population Group: Low Inc—Central Augusta
*Schley
Population Group: Low Inc—Schley Co
*Screven
Spaulding

PRIMARY MEDICAL CARE: Georgia
County Listing

Population Group: Low Inc—Spalding Co
*Stewart
Service Area: Stewart/Webster
*Talbot
Population Group: Low Inc—Talbot
*Taliaferro
Population Group: Low Inc—Taliaferro
*Tattnall
Population Group: Low Inc—Tattnall
*Taylor
*Telfair
Population Group: Low Inc—Telfair Co
*Terrell
*Toombs
Population Group: Low Inc—Toombs Co
*Towns
Population Group: Low Inc—Towns Co
*Troup
*Turner
Population Group: Low Inc—Turner Co
Twiggs
*Union
Population Group: Low Inc—Union Co
Walker
Walton
Population Group: Low Inc—Walton Co
*Ware
Population Group: Low Inc—Ware Co
*Warren
*Washington
Population Group: Low Inc—Washington Co
*Wayne
Facility: FCI Jesup
*Webster
Service Area: Stewart/Webster
*Wheeler
Population Group: Low Inc—Montgomery/Wheeler
*White
Population Group: Low Inc—White Co
*Whitfield
Population Group: Low Inc—Whitfield Co
*Wilcox
Population Group: Low Inc—Wilcox Co
Facility: Wilcox State Prison
*Wilkes
*Wilkinson
*Worth
Population Group: Low Inc—Worth

PRIMARY MEDICAL CARE: Georgia
Service Area Listing

Service Area Name

Atlanta/Southside
County—Fulton
Parts:
C.T. 44
C.T. 46.95
C.T. 48
C.T. 49.95
C.T. 50
C.T. 52–53
C.T. 55.01–55.02
C.T. 56–58
C.T. 63–64
C.T. 67
C.T. 68.01–68.02
C.T. 69–73
East Albany
County—Dougherty
Parts:

PRIMARY MEDICAL CARE: Georgia
Service Area Listing

Service Area Name

C.T. 1–2
C.T. 101–102
C.T. 103.01–103.02
C.T. 107–111
Palmetto
County—Fulton
Parts:
C.T. 104
C.T. 105.04–105.06
South Albany
County—Dougherty
Parts:
C.T. 12
C.T. 14.01–14.02
C.T. 15
C.T. 106.01–106.02
South Decatur/Candler/Mcafee
County—De Kalb
Parts:
C.T. 205–209
C.T. 227
C.T. 231.01
C.T. 235.01–235.02
C.T. 236–237
Stewart/Webster
County—Stewart
County—Webster
West Atlanta
County—Fulton
Parts:
C.T. 8
C.T. 22–26
C.T. 36–41
C.T. 42.95
C.T. 43
C.T. 60–62
C.T. 66.02
C.T. 78.04
C.T. 80
C.T. 81.01–81.02
C.T. 82.01–82.02
C.T. 83.01–83.02
C.T. 84–85
C.T. 86.01–86.02
C.T. 87.01–87.02
Woodbine
County—Camden
Parts:
Woodbine Division

PRIMARY MEDICAL CARE: Georgia
Population Group Listing

Population Group

Low Inc—Appling
County—Appling
Parts:
Low Income
Low Inc—Bacon Co
County—Bacon
Parts:
Low Income
Low Inc—Baldwin
County—Baldwin
Parts:
Low Income
Low Inc—Barrow Co
County—Barrow
Parts:
Low Income
Low Inc—Bartow Co
County—Bartow

PRIMARY MEDICAL CARE: Georgia
Population Group Listing

Population Group

Parts:
Low Income
Low Inc—Ben Hill Co
County—Ben Hill
Parts:
Low Income
Low Inc—Berrien Co
County—Berrien
Parts:
Low Income
Low Inc—Bleckley Co
County—Bleckley
Parts:
Low Income
Low Inc—Bulloch
County—Bulloch
Parts:
Low Income
Low Inc—Burke Co
County—Burke
Parts:
Low Income
Low Inc—Butts Co
County—Butts
Parts:
Low Income
Low Inc—Candler Co
County—Candler
Parts:
Low Income
Low Inc—Central Augusta
County—Richmond
Parts:
C.T. 104
C.T. 105.04–105.09
C.T. 106
Low Inc—Central Marietta
County—Cobb
Parts:
C.T. 306–308
C.T. 309.02
Low Inc—Central Muscogee
County—Muscogee/Columbus
Parts:
C.T. 1
C.T. 13
C.T. 15
C.T. 18–20
C.T. 22–28
C.T. 29.01–29.02
C.T. 30–34
Low Inc—Charlton Co
County—Charlton
Parts:
Low Income
Low Inc—Chattahoochee
County—Chattahoochee
Parts:
Low Income
Low Inc—Clay
County—Clay
Parts:
Low Income
Low Inc—Clinch Co
County—Clinch
Parts:
Low Income
Low Inc—Cook
County—Cook
Parts:
Low Income
Low Inc—Crisp Co

PRIMARY MEDICAL CARE: Georgia
Population Group Listing

Population Group

County—Crisp
Parts:
Low Income
Low Inc—Dade
County—Dade
Parts:
Low Income
Low Inc—Decatur Co
County—Decatur
Parts:
Low Income
Low Inc—Dodge Co
County—Dodge
Parts:
Low Income
Low Inc—Dooly Co
County—Dooly
Parts:
Low Income
Low Inc—Douglasville
County—Douglas
Parts:
Low Income
Low Inc—Early
County—Early
Parts:
Low Income
Low Inc—Elbert Co
County—Elbert
Parts:
Low Income
Low Inc—Fannin Co
County—Fannin
Parts:
Low Income
Low Inc—Franklin Co
County—Franklin
Parts:
Low Income
Low Inc—Gilmer Co
County—Gilmer
Parts:
Low Income
Low Inc—Gordon
County—Gordon
Parts:
Low Income
Low Inc—Grady Co
County—Grady
Parts:
Low Income
Low Inc—Greene
County—Greene
Parts:
Low Income
Low Inc—Habersham Co
County—Habersham
Parts:
Low Income
Low Inc—Hancock
County—Hancock
Parts:
Low Income
Low Inc—Haralson Co
County—Haralson
Parts:
Low Income
Low Inc—Hart Co
County—Hart
Parts:
Low Income
Low Inc—Houston Co

PRIMARY MEDICAL CARE: Georgia
Population Group Listing

Population Group

County—Houston
Parts:
Low Income
Low Inc—Jackson Co
County—Jackson
Parts:
Low Income
Low Inc—Jeff Davis Co
County—Jeff Davis
Parts:
Low Income
Low Inc—Jenkins Co
County—Jenkins
Parts:
Low Income
Low Inc—Johnson
County—Johnson
Parts:
Low Income
Low Inc—Lamar Co
County—Lamar
Parts:
Low Income
Low Inc—Lanier Co
County—Lanier
Parts:
Low Income
Low Inc—Lincoln County
County—Lincoln
Parts:
Low Income
Low Inc—Lumpkin Co
County—Lumpkin
Parts:
Low Income
Low Inc—Madison Co
County—Madison
Parts:
Low Income
Low Inc—Marion Co
County—Marion
Parts:
Low Income
Low Inc—Mcduffie
County—McDuffie
Parts:
Low Income
Low Inc—Meriwether
County—Meriwether
Parts:
Low Income
Low Inc—Miller
County—Miller
Parts:
Low Income
Low Inc—Montgomery/Wheeler
County—Montgomery
Parts:
Low Income
County—Wheeler
Parts:
Low Income
Low Inc—Morgan Co
County—Morgan
Parts:
Low Income
Low Inc—Murray
County—Murray
Parts:
Low Income
Low Inc—N W Savannah
County—Chatham

PRIMARY MEDICAL CARE: Georgia
Population Group Listing

Population Group

Parts:
C.T. 1
C.T. 3
C.T. 6.01
C.T. 8–13
C.T. 15
C.T. 17–28
C.T. 32
C.T. 33.01–33.02
C.T. 36.01–36.02
C.T. 37
C.T. 44–45
C.T. 101.01
C.T. 105.01–105.02
C.T. 106.01
C.T. 106.03–106.04
Low Inc—Newton Co
County—Newton
Parts:
Low Income
Low Inc—Peach Co
County—Peach
Parts:
Low Income
Low Inc—Pembroke
County—Bryan
Parts:
Pembroke CCD
Low Inc—Pickens Co
County—Pickens
Parts:
Low Income
Low Inc—Pierce Co
County—Pierce
Parts:
Low Income
Low Inc—Pike
County—Pike
Parts:
Low Income
Low Inc—Randolph Co
County—Randolph
Parts:
Low Income
Low Inc—Schley Co
County—Schley
Parts:
Low Income
Low Inc—Spalding Co
County—Spaulding
Parts:
Low Income
Low Inc—Stone Mtn./Clarkston
County—De Kalb
Parts:
C.T. 219.05
C.T. 220–221
Low Inc—Talbot
County—Talbot
Parts:
Low Income
Low Inc—Taliaferro
County—Taliaferro
Parts:
Low Income
Low Inc—Tattnall
County—Tattnall
Parts:
Low Income
Low Inc—Telfair Co
County—Telfair
Parts:

PRIMARY MEDICAL CARE: Georgia
Population Group Listing

Population Group

Low Income
Low Inc—Toombs Co
County—Toombs
Parts:
Low Income
Low Inc—Towns Co
County—Towns
Parts:
Low Income
Low Inc—Turner Co
County—Turner
Parts:
Low Income
Low Inc—Union Co
County—Union
Parts:
Low Income
Low Inc—Walton Co
County—Walton
Parts:
Low Income
Low Inc—Ware Co
County—Ware
Parts:
Low Income
Low Inc—Washington Co
County—Washington
Parts:
Low Income
Low Inc—White Co
County—White
Parts:
Low Income
Low Inc—Whitfield Co
County—Whitfield
Parts:
Low Income
Low Inc—Wilcox Co
County—Wilcox
Parts:
Low Income
Low Inc—Worth
County—Worth
Parts:
Low Income

PRIMARY MEDICAL CARE: Georgia
Facility Listing

Facility Name

Central Health Center
County—Fulton
Dodge State Prison
County—Dodge
Eastman Youth Development Campus
County—Dodge
FCI Jesup
County—Wayne
Ga Diagnostic Prison
County—Butts
North Dekalb Clinic
County—De Kalb
Pelham Youth Development Campus
County—Mitchell
Phillips State Prison
County—Forsyth
Smyrna Health Center
County—Cobb
USP—Atlanta
County—Fulton
Wilcox State Prison
County—Wilcox

PRIMARY MEDICAL CARE: Georgia
Facility Listing

Facility Name
Wrightsville Youth Develp Campus
County—Johnson

PRIMARY MEDICAL CARE: Hawaii
County Listing

County Name
*Hawaii
Service Area: Hamakua
Service Area: Kau District
Service Area: Pahoa
Honolulu
Population Group: Low Inc—Kokua/Kalihi-Palama
*Maui/Kalawao
Service Area: Hana/Haiku
Service Area: Island Of Molokai

PRIMARY MEDICAL CARE: Hawaii
Service Area Listing

Service Area Name
Hamakua
County—Hawaii
Parts:
C.T. 219–221
Hana/Haiku
County—Maui/Kalawao
Parts:
C.T. 301–302
Island Of Molokai
Parts:
C.T. 319
County—Maui/Kalawao
Parts:
C.T. 317–318
Kau District
County—Hawaii
Parts:
C.T. 212
Pahoa
County—Hawaii
Parts:
C.T. 211

PRIMARY MEDICAL CARE: Hawaii
Population Group Listing

Population Group
Low Inc—Kokua/Kalihi-Palama
County—Honolulu
Parts:
C.T. 51–57
C.T. 57.99–58.00
C.T. 59–61
C.T. 62.01–62.02
C.T. 63.01–63.02
C.T. 64.01–64.02
C.T. 65–66

PRIMARY MEDICAL CARE: Idaho
County Listing

County Name
Ada
Facility: Idaho State Pen. (Max/Med Units)
*Adams
*Bannock
Service Area: South Bannock Division
*Benewah
Population Group: Low Inc—Benewah Co
*Bingham

PRIMARY MEDICAL CARE: Idaho
County Listing

County Name
Population Group: Low Inc/MFW—Bingham Co
*Blaine
Service Area: Carey
*Boise
*Bonner
Service Area: Clark Fork
Service Area: Priest River
*Bonneville
Service Area: Swan Valley
*Boundary
*Butte
Service Area: Arco/Mackay
*Camas
Canyon
Population Group: Low Inc/MFW—Canyon Co
*Caribou
*Cassia
Population Group: Low Inc/MFW—Cassia Co
*Clark
*Clearwater
Service Area: Elk River
Service Area: Pierce/Weippe
*Custer
Service Area: Arco/Mackay
Service Area: Stanley/Challis
*Elmore
*Franklin
*Fremont
*Gem
Population Group: Low Inc/MFW—Gem Co
*Gooding
*Idaho
Service Area: Elk City
Service Area: Riggins
*Jefferson
*Jerome
Population Group: Low Inc/MFW—Jerome Co
*Kootenai
Population Group: Low Inc—Kootenai Co
*Latah
Population Group: Low Inc—Latah Co
*Lemhi
*Lewis
Service Area: Winchester
*Lincoln
*Madison
Population Group: Low Inc/MFW—Madison Co
*Minidoka
Population Group: Low Inc/MFW—Minidoka Co
*Oneida
*Owyhee
*Payette
*Power
Population Group: Low Inc/MFW—Power Co
*Teton
*Twin Falls
Population Group: Low Inc/MFW—Twin Falls Co
*Valley
Service Area: Cascade
*Washington

PRIMARY MEDICAL CARE: Idaho
Service Area Listing

Service Area Name
Arco/Mackay
County—Butte
County—Custer
Parts:
Mackay Division
Carey
County—Blaine
Parts:
Carey Division
Cascade
County—Valley
Parts:
C.T. 9701
Clark Fork
County—Bonner
Parts:
Clark Fork Division
Elk City
County—Idaho
Parts:
Elk City Division
Elk River
County—Clearwater
Parts:
Elk River Division
Pierce/Weippe
County—Clearwater
Parts:
Pierce-Headquarters Division
Weippe Division
Priest River
County—Bonner
Parts:
Blanchard-Glengary Division
Priest River Division
Riggins
County—Idaho
Parts:
Riggins Division
South Bannock Division
County—Bannock
Parts:
South Bannock Division
Stanley/Challis
County—Custer
Parts:
Challis Division
Stanley Division
Swan Valley
County—Bonneville
Parts:
Swan Valley Division
Winchester
County—Lewis
Parts:
Winchester Division

PRIMARY MEDICAL CARE: Idaho
Population Group Listing

Population Group
Low Inc—Benewah Co
County—Benewah
Parts:
Low Income
Low Inc—Kootenai Co
County—Kootenai
Parts:
Low Income
Low Inc—Latah Co
County—Latah
Parts:

PRIMARY MEDICAL CARE: Idaho
Population Group Listing

Population Group

Low Income
Low Inc/MFW—Bingham Co
County—Bingham
Parts:
Low Income/MFW
Low Inc/MFW—Canyon Co
County—Canyon
Parts:
Low Income/MFW
Low Inc/MFW—Cassia Co
County—Cassia
Parts:
Low Income/MFW
Low Inc/MFW—Gem Co
County—Gem
Low Inc/MFW—Jerome Co
County—Jerome
Parts:
Low Income/MFW
Low Inc/MFW—Madison Co
County—Madison
Parts:
Low Income/MFW
Low Inc/MFW—Minidoka Co
County—Minidoka
Parts:
Low Income/MFW
Low Inc/MFW—Power Co
County—Power
Parts:
Low Income/MFW
Low Inc/MFW—Twin Falls Co
County—Twin Falls
Parts:
Low Income/MFW

PRIMARY MEDICAL CARE: Idaho
Facility Listing

Facility Name

Idaho State Pen. (Max/Med Units)
County—Ada

PRIMARY MEDICAL CARE: Illinois
County Listing

County Name

*Alexander
Service Area: Cairo
*Bond
Facility: Greenville Corr Inst
*Brown
*Calhoun
*Carroll
*Cass
Clinton (g)
Facility: Centralia Corr Ctr
Cook
Service Area: Auburn Gresham
Service Area: Austin
Service Area: Humboldt Park
Service Area: Logan Square
Service Area: New City
Service Area: Roseland/Pullman/Burnside
Service Area: S Lawndale
Service Area: South Chicago/Avalon Park
Service Area: South Deering
Service Area: West Englewood/Englewood
Population Group: Hmlss—Uptown/Near North Side/Loop
Facility: Alivio Med Ctr
Facility: Altgeld Health Ctr

PRIMARY MEDICAL CARE: Illinois
County Listing

County Name

Facility: Children's Primary Care Serv
Facility: Cicero Health Center
Facility: Community Health Center
Facility: Cook Co (Sengstacke)
Facility: Cook Co Dept Of Corr Complex
Facility: Erie Family HC (Teens)
Facility: Erie Family HC (West Town)
Facility: Erie Family HC (Humboldt Park)
Facility: Fantus Outpt Clinic—Cook Co Hosp
Facility: Friend Family Health Ctr
Facility: Hawthorne Works Med Ctr
Facility: Infant Welfare Society
Facility: Ingalls Community Care Ctr
Facility: Jackson Pk Hosp—Senior Health Clinic
Facility: Kedzie Plaza Med Ctr
Facility: Kling Prof Office Bldg
Facility: Komed/Holman Health Center
Facility: Lawndale Christian Hlth Ctr
Facility: Lawndale Plaza Medical Ctr
Facility: Lincoln Memorial Health Ctr
Facility: Lincoln Med Ctr
Facility: Lower West Neighborhood Hlth Ctr
Facility: Markham Medical Clinic
Facility: Mile Square Health Center
Facility: Near South Health Ctr
Facility: PCC Community Wellness Ctr
Facility: Pediatric Clinic—U Of Il
Facility: Pediatric Follow-Up Clinic
Facility: Pilsen Med Ctr
Facility: Sinai Doctors Med Ctr
Facility: West Side Health Ctr
Facility: West Town Neighborhood Hlth Ctr
Facility: Westside Family Health Ctr
Facility: Winfield Moody Health Ctr
Facility: Woodlawn Health Ctr
*Cumberland
*Edgar
*Fayette
*Franklin
*Gallatin
*Hamilton
Population Group: Low Inc—Hamilton Co
*Hardin
Service Area: Hardin/Pope
*Iroquois
Service Area: Hoopeston
*Jasper
*Jo Daviess
Service Area: Stockton/Warren
*Johnson (g)
Facility: Shawnee Corr Ctr
Kane
Service Area: Carpentersville City
Service Area: Central Aurora
*Knox
Facility: Hill Corr Ctr
*Lawrence
Population Group: Low Inc—Lawrence Co
*Lee
Service Area: Ashton
Macon
Population Group: Low Inc—Decatur City
*Macoupin
Madison
Service Area: East St. Louis
Population Group: Low Inc—Alton/Wood River
Facility: Koch Family Health Ctr
*Mason
*Massac

PRIMARY MEDICAL CARE: Illinois
County Listing

County Name

Population Group: Low Inc—Massac Co
Ogle
Service Area: Polo
*Perry
Population Group: Low Inc—Perry Co
*Pope
Service Area: Hardin/Pope
*Pulaski
Service Area: Cairo
Rock Island
Population Group: Low Inc—Greater Davenport (IA/IL)
Population Group: Low Inc—Eastern Rock Island Co
*Scott
*Shelby
Population Group: Low Inc—Shelby Co
St Clair
Service Area: East St. Louis
*Stark
Tazewell
Facility: FCI Pekin
*Vermilion
Service Area: Hoopeston
*Washington
Service Area: Nashville
*White
Population Group: Low Inc—White Co
Will
Population Group: Low Inc—Eastside Joliet
Facility: Joliet Corr Inst
*Williamson
Facility: USP Marion
Winnebago
Service Area: Rockford Westside

PRIMARY MEDICAL CARE: Illinois
Service Area Listing

Service Area Name

Ashton
County—Lee
Parts:
Alto Township
Amboy Township
Ashton Township
Bradford Township
Brooklyn Township
China Township
Lee Center Township
May Township
Reynolds Township
Sublette Township
Viola Township
Willow Creek Township
Wyoming Township
Auburn Gresham
County—Cook
Parts:
C.T. 7101–7115
C.T. 7301–7307
Austin
County—Cook
Parts:
C.T. 2501–2524
Cairo
County—Alexander
County—Pulaski
Carpentersville City
County—Kane
Parts:
C.T. 8502.01–8502.02

PRIMARY MEDICAL CARE: Illinois
Service Area Listing

Service Area Name

C.T. 8503.01–8503.02
Central Aurora
County—Kane
Parts:
C.T. 8529.04
C.T. 8532–8538
East St. Louis
County—Madison
Parts:
C.T. 4007
County—St Clair
Parts:
C.T. 5004–5006
C.T. 5009–5014
C.T. 5021–5022
C.T. 5024.01
C.T. 5024.03–5024.04
C.T. 5025
C.T. 5027–5030
C.T. 5041
C.T. 5042.01
C.T. 5044
Hardin/Pope
County—Hardin
County—Pope
Hoopeston
County—Iroquois
Parts:
Fountain Creek Township
Lovejoy Township
Prairie Green Township
County—Vermilion
Parts:
Butler Township
Grant Township
Middlefork Township
Ross Township
South Ross Township
Humboldt Park
County—Cook
Parts:
C.T. 2301–2318
Logan Square
County—Cook
Parts:
C.T. 2001–2006
C.T. 2201–2229
Nashville
County—Washington
Parts:
Beaucoup Township
Bolo Township
Covington Township
Du Bois Township
Johannisburg Township
Lively Grove Township
Nashville Township
Oakdale Township
Okawville Township
Pilot Knob Township
Plum Hill Township
Venedy Township
New City
County—Cook
Parts:
C.T. 3701–3704
C.T. 6101–6122
Polo
County—Ogle
Parts:
Brookville Township
Buffalo Township

PRIMARY MEDICAL CARE: Illinois
Service Area Listing

Service Area Name

Eagle Point Township
Forreston Township
Leaf River Township
Lincoln Township
Maryland Township
Mount Morris Township
Pine Creek Township
Woosung Township
Rockford Westside
County—Winnebago
Parts:
C.T. 10–12
C.T. 21
C.T. 24–29
C.T. 32
Roseland/Pullman/Burnside
County—Cook
Parts:
C.T. 4701
C.T. 4901–4914
C.T. 5001–5003
S Lawndale
County—Cook
Parts:
C.T. 3001–3020
South Chicago/Avalon Park
County—Cook
Parts:
C.T. 4501–4503
C.T. 4601–4610
South Deering
County—Cook
Parts:
C.T. 5101–5105
Stockton/Warren
County—Jo Daviess
Parts:
Apple River Township
Berreman Township
Derinda Township
Nora Township
Pleasant Valley Township
Rush Township
Stockton Township
Thompson Township
Wards Grove Township
Warren Township
Woodbine Township
West Englewood/Englewood
County—Cook
Parts:
C.T. 6701–6720
C.T. 6801–6814

PRIMARY MEDICAL CARE: Illinois
Population Group Listing

Population Group

Hmlss—Uptown/Near North Side/Loop 1
County—Cook
Parts:
Edgewater (C.T. 301–309)
Lakeview(C.T. 601–634)
Lincoln Park(C.T.701–720
Loop (C.T. 3201–3206)
Near N Side(C.T.801–819
Uptown(C.T. 310–321)
Low Inc—Alton/Wood River
County—Madison
Parts:
Alton Twp
Wood River Twp

PRIMARY MEDICAL CARE: Illinois
Population Group Listing

Population Group

Low Inc—Decatur City
County—Macon
Parts:
C.T. 1–3
C.T. 4.97–4.98
C.T. 5.98
C.T. 6–9
C.T. 16
C.T. 20
Low Inc—Eastern Rock Island Co
County—Rock Island
Parts:
C.T. 202–203
C.T. 206–210
C.T. 213–215
Low Inc—Eastside Joliet
County—Will
Parts:
C.T. 8812–8813
C.T. 8820–8822
C.T. 8824–8825
C.T. 8830
Low Inc—Greater Davenport (IA/IL)
County—Rock Island
Parts:
C.T. 216–217
C.T. 222–224
C.T. 226–228
C.T. 233–237
Low Inc—Hamilton Co
County—Hamilton
Parts:
Low Income
Low Inc—Lawrence Co
County—Lawrence
Parts:
Low Income
Low Inc—Massac Co
County—Massac
Parts:
Low Income
Low Inc—Perry Co
County—Perry
Parts:
Low Income
Low Inc—Shelby Co
County—Shelby
Parts:
Low Income
Low Inc—White Co
County—White
Parts:
Low Income

PRIMARY MEDICAL CARE: Illinois
Facility Listing

Facility Name

Alivio Med Ctr
County—Cook
Altgeld Health Ctr
County—Cook
Centralia Corr Ctr
County—Clinton
Children's Primary Care Serv
County—Cook
Cicero Health Center
County—Cook
Community Health Center
County—Cook
Cook Co (Sengstacke)
County—Cook

PRIMARY MEDICAL CARE: Illinois
Facility Listing

Facility Name

Cook Co Dept Of Corr Complex
County—Cook
Erie Family HC (Humboldt Park)
County—Cook
Erie Family HC (Teens)
County—Cook
Erie Family HC (West Town)
County—Cook
Fantus Outpt Clinic—Cook Co Hosp
County—Cook
Friend Family Health Ctr
County—Cook
FCI Pekin
County—Tazewell
Greenville Corr Inst
County—Bond
Hawthorne Works Med Ctr
County—Cook
Hill Corr Ctr
County—Knox
Infant Welfare Society
County—Cook
Ingalls Community Care Ctr
County—Cook
Jackson Pk Hosp—Senior Health Clinic
County—Cook
Joliet Corr Inst
County—Will
Kedzie Plaza Med Ctr
County—Cook
Kling Prof Office Bldg
County—Cook
Koch Family Health Ctr
County—Madison
Komed/Holman Health Center
County—Cook
Lawndale Christian Hlth Ctr
County—Cook
Lawndale Plaza Medical Ctr
County—Cook
Lincoln Med Ctr
County—Cook
Lincoln Memorial Health Ctr
County—Cook
Lower West Neighborhood Hlth Ctr
County—Cook
Markham Medical Clinic
County—Cook
Mile Square Health Center
County—Cook
Near South Health Ctr
County—Cook
PCC Community Wellness Ctr
County—Cook
Pediatric Clinic—U Of Il
County—Cook
Pediatric Follow-Up Clinic
County—Cook
Pilsen Med Ctr
County—Cook
Shawnee Corr Ctr
County—Johnson
Sinai Doctors Med Ctr
County—Cook
USP Marion
County—Williamson
West Side Health Ctr
County—Cook
West Town Neighborhood Hlth Ctr
County—Cook
Westside Family Health Ctr
County—Cook

PRIMARY MEDICAL CARE: Illinois
Facility Listing

Facility Name

Winfield Moody Health Ctr
County—Cook
Woodlawn Health Ctr
County—Cook

PRIMARY MEDICAL CARE: Indiana
County Listing

County Name

*Benton
*Blackford
*Brown
*Carroll
Population Group: Low Inc—Carroll Co
Clinton
Population Group: Low Inc—Clinton Co
*Crawford
*Daviess
*Grant
Population Group: Low Inc—Grant Co
*Henry
Population Group: Low Inc—Henry Co
Howard
Population Group: Low Inc—Inner City Kokomo
*Jasper
Population Group: Low Inc—Jasper Co
*Jennings
*Knox
Facility: Wabash Valley Clinic
*La Porte
Population Group: Low Inc—La Porte Co
Facility: Indiana State Prs
*Lagrange
Lake
Service Area: East Chicago
Service Area: Gary
Marion
Service Area: Forest Manor (Indianapolis)
Service Area: Highland-Brookside (Indianapolis)
Service Area: Near North Side (Indianapolis)
Service Area: South Central Indianapolis
Service Area: Southwest Indianapolis
*Newton
*Ohio
*Owen
*Perry
Population Group: Low Inc—Perry
Facility: Branchville Training Ctr
*Pike
*Putnam
Facility: Indiana State Farm
*Randolph
*Ripley
Service Area: Osgood/Versailles
*Rush
Population Group: Low Inc—Rush Co
Scott
Population Group: Low Inc—Scott Co
*Spencer
St Joseph
Service Area: Southwest South Bend
*Starke
*Steuben
Vanderburgh
Population Group: Homeless—Evansville
Vigo
Facility: Terre Haute Corr Inst
*Warren
*Washington

PRIMARY MEDICAL CARE: Indiana
County Listing

County Name

Population Group: Low Inc—Washington Co

PRIMARY MEDICAL CARE: Indiana
Service Area Listing

Service Area Name

East Chicago
County—Lake
Parts:
C.T. 301–303
C.T. 303.98
C.T. 304
C.T. 304.98
C.T. 305–310
Forest Manor (Indianapolis)
County—Marion
Parts:
C.T. 3225–3227
C.T. 3505–3508
C.T. 3523
Gary
County—Lake
Parts:
C.T. 101
C.T. 102.98
C.T. 103–134
C.T. 411–412
C.T. 413.01
Highland-Brookside (Indianapolis)
County—Marion
Parts:
C.T. 3526–3527
C.T. 3544–3545
C.T. 3547–3551
Near North Side (Indianapolis)
County—Marion
Parts:
C.T. 3517
C.T. 3519
C.T. 3521
C.T. 3528
C.T. 3531–3532
Osgood/Versailles
County—Ripley
Parts:
Brown Township
Center Township
Johnson Township
Otter Creek Township
Shelby Township
Washington Township
South Central Indianapolis
County—Marion
Parts:
C.T. 3556–3557
C.T. 3559
C.T. 3562
C.T. 3569–3572
C.T. 3578–3580
Southwest Indianapolis
County—Marion
Parts:
C.T. 3414–3415
C.T. 3417
C.T. 3424–3426
C.T. 3563–3564
C.T. 3581
Southwest South Bend
County—St Joseph
Parts:
C.T. 6

PRIMARY MEDICAL CARE: Indiana
Service Area Listing

Service Area Name

C.T. 17–24
C.T. 27
C.T. 29–30

PRIMARY MEDICAL CARE: Indiana
Population Group Listing

Population Group

Homeless—Evansville 1
County—Vanderburgh
Parts:
Evansville City
Low Inc—Carroll Co
County—Carroll
Parts:
Low Income
Low Inc—Clinton Co
County—Clinton
Parts:
Low Income
Low Inc—Grant Co
County—Grant
Parts:
Low Income
Low Inc—Henry Co
County—Henry
Parts:
Low Income
Low Inc—Inner City Kokomo
County—Howard
Parts:
C.T. 1–2
C.T. 4–5
C.T. 9
C.T. 12
Low Inc—Jasper Co
County—Jasper
Parts:
Low Income
Low Inc—La Porte Co
County—La Porte
Parts:
Low Income
Low Inc—Perry
County—Perry
Parts:
Low-Income
Low Inc—Rush Co
County—Rush
Parts:
Low Income
Low Inc—Scott Co
County—Scott
Parts:
Low Income
Low Inc—Washington Co
County—Washington
Parts:
Low Income

PRIMARY MEDICAL CARE: Indiana
Facility Listing

Facility Name

Branchville Training Ctr
County—Perry
Indiana State Farm
County—Putnam
Indiana State Prs
County—La Porte
Terre Haute Corr Inst
County—Vigo

PRIMARY MEDICAL CARE: Indiana
Facility Listing

Facility Name

Wabash Valley Clinic
County—Knox

PRIMARY MEDICAL CARE: Iowa
County Listing

County Name

*Adair
*Benton
*Boone
Service Area: Dayton/Gowrie
Bremer
Service Area: Sumner/Tripoli
*Buchanan
*Butler
*Calhoun
Service Area: Dayton/Gowrie
Service Area: Lake City
Service Area: Manson
*Carroll
Service Area: Lake City
*Cedar
Service Area: Lowden/Lost Nation
*Clinton
Service Area: Lowden/Lost Nation
Dallas
Service Area: Redfield
*Franklin
Population Group: Low Inc—Franklin Co
*Greene
Service Area: Dayton/Gowrie
Service Area: Lake City
*Guthrie
Service Area: Redfield
*Hamilton
Service Area: Dayton/Gowrie
*Henry
Service Area: Keosauqua
Facility: Mt. Pleasant Corr Fac
*Ida
*Jackson
Service Area: Lowden/Lost Nation
*Jefferson
Service Area: Keosauqua
*Kossuth
*Lee
Service Area: Keosauqua
*Louisa
*Madison
Service Area: Redfield
*Mitchell
*Pocahontas
Service Area: Manson
Pottawattamie
Service Area: Oakland
Population Group: Low Inc—W Pottawattamie Co
*Sac
Scott
Service Area: Lowden/Lost Nation
Population Group: Low Inc—Greater Davenport (IA/IL)
*Sioux
Service Area: Hawarden/Ireton
*Tama
*Taylor
*Van Buren
Service Area: Keosauqua
*Webster
Service Area: Dayton/Gowrie
Service Area: Manson
Woodbury

PRIMARY MEDICAL CARE: Iowa
County Listing

County Name

Population Group: Low Inc—NW Sioux City

PRIMARY MEDICAL CARE: Iowa
Service Area Listing

Service Area Name

Dayton/Gowrie
County—Boone
Parts:
Dodge Township
Grant Township
Pilot Mound Township
County—Calhoun
Parts:
Reading Township
County—Greene
Parts:
Dawson Township
Paton Township
County—Hamilton
Parts:
Marion Township
Webster Township
County—Webster
Parts:
Burnside Township
Clay Township
Dayton Township
Gowrie Township
Hardin Township
Lost Grove Township
Roland Township
Sumner Township
Webster Township
Yell Township
Hawarden/Ireton
County—Sioux
Parts:
Buncombe Township
Center Township
Eagle Township
Garfield Township
Logan Township
Plato Township
Reading Township
Sherman Township
Washington Township
Keosauqua
County—Henry
Parts:
Jackson Township
Salem Township
County—Jefferson
Parts:
Cedar Township
Des Moines Township
Liberty Township
Round Prairie Township
County—Lee
Parts:
Cedar Township
Franklin Township
Harrison Township
Marion Township
Van Buren Township
County—Van Buren
Lake City
County—Calhoun
Parts:
Calhoun Township
Cedar Township

PRIMARY MEDICAL CARE: Iowa
Service Area Listing

Service Area Name

Elm Grove Township
Garfield Township
Jackson Township
Lake Creek Township
Lake City City
Logan Township
Union Township
Williams Township
County—Carroll
Parts:
Jasper Township
Kniest Township
Sheridan Township
Wheatland Township
County—Greene
Parts:
Cedar Township
Highland Township
Lowden/Lost Nation
County—Cedar
Parts:
Inland Township
Massillon Township
Springfield Township
County—Clinton
Parts:
Liberty Township
Sharon Township
Spring Rock Township
County—Jackson
Parts:
Monmouth Township
County—Scott
Parts:
Liberty Township
Manson
County—Calhoun
Parts:
Butler Township
Center Township
Greenfield Township
Lincoln Township
Sherman Township
Twin Lakes Township
County—Pocahontas
Parts:
Bellville Township
Lizard Township
County—Webster
Parts:
Jackson Township
Johnson Township
Oakland
County—Pottawattamie
Parts:
Belknap Township
Carson Township
Center Township
Grove Township
James Township
Knox Township
Layton Township
Lincoln Township
Macedonia Township
Pleasant Township
Silver Creek Township
Valley Township
Washington Township
Waveland Township
Wright Township
Redfield
County—Dallas

PRIMARY MEDICAL CARE: Iowa
Service Area Listing

Service Area Name

Parts:
Linn Township
Union Township
County—Guthrie
Parts:
Penn Township
Stuart Township
County—Madison
Parts:
Madison Township
Penn Township
Sumner/Tripoli
County—Bremer
Parts:
Dayton Township
Frederika Township
Fremont Township
Le Roy Township
Sumner City
Sumner No. 2 Township

PRIMARY MEDICAL CARE: Iowa
Population Group Listing

Population Group

Low Inc—Franklin Co
County—Franklin
Parts:
Low Income
Low Inc—Greater Davenport (IA/IL)
County—Scott
Parts:
C.T. 105–117
C.T. 122–123
C.T. 130
C.T. 135
Low Inc—NW Sioux City
County—Woodbury
Parts:
C.T. 7–8
C.T. 10
C.T. 12–16
Low Inc—W Pottawattamie Co
County—Pottawattamie
Parts:
Boomer Twp
Crescent Twp
Garner Twp
Hardin Twp
Hazel Dell Twp
Kane Twp
Keg Creek Twp
Lake Twp
Lewis Twp
Minden Twp
Neola Twp
Norwalk Twp
Rockford Twp
York Twp

PRIMARY MEDICAL CARE: Iowa
Facility Listing

Facility Name

Mt. Pleasant Corr Fac
County—Henry

PRIMARY MEDICAL CARE: Kansas
County Listing

County Name

*Atchison
Population Group: Low Inc—Atchison Co
*Barton
Population Group: Low Inc—Barton Co
*Chautauqua
*Cherokee
*Cheyenne
*Clark
Service Area: Clark/Meade
*Cloud
Population Group: Low Inc—Cloud Co
*Comanche
*Crawford
Population Group: Low Inc—Crawford Co
*Doniphan
*Edwards
*Elk
*Finney
Population Group: Low Inc—Finney Co
*Hamilton
*Haskell
*Hodgeman
*Jewell
*Kearny
*Kiowa
*Lane
Population Group: Low Inc—Lane Co
Leavenworth
Facility: USP Leavenworth
*Lincoln
*Linn
*Lyon
Population Group: Low Inc—Lyon Co
*Meade
Service Area: Clark/Meade
*Osborne
*Pawnee
*Phillips
*Pratt
*Rawlins
*Rooks
*Rush
Population Group: Low Inc—Rush
*Russell
*Sheridan
*Smith
Population Group: Low Inc—Smith Co
*Stevens
*Wallace
*Washington
*Wichita

PRIMARY MEDICAL CARE: Kansas
Service Area Listing

Service Area Name

Clark/Meade
County—Clark
County—Meade

PRIMARY MEDICAL CARE: Kansas
Population Group Listing

Population Group

Low Inc—Atchison Co
County—Atchison
Parts:
Low Income
Low Inc—Barton Co
County—Barton
Parts:
Low Income
Low Inc—Cloud Co

PRIMARY MEDICAL CARE: Kansas
Population Group Listing

Population Group

County—Cloud
Parts:
Low Income
Low Inc—Crawford Co
County—Crawford
Parts:
Low Income
Low Inc—Finney Co
County—Finney
Parts:
Low Income
Low Inc—Lane Co
County—Lane
Parts:
Low Income
Low Inc—Lyon Co
County—Lyon
Parts:
Low Income
Low Inc—Rush
County—Rush
Parts:
Low Income
Low Inc—Smith Co
County—Smith
Parts:
Low Income

PRIMARY MEDICAL CARE: Kansas
Facility Listing

Facility Name

USP Leavenworth
County—Leavenworth

PRIMARY MEDICAL CARE: Kentucky
County Listing

County Name

*Adair
*Allen
*Anderson
Population Group: Low Inc—Anderson
*Ballard
*Bath
Population Group: Low Inc—Bath
*Bell
Service Area: Williamsburg/Saxton
*Bracken
*Breathitt
*Breckinridge
Population Group: Low Inc—Breckinridge Co
Bullitt
*Butler
Campbell
Population Group: Low Inc—Inner City Newport
*Carlisle
*Carroll
Carter
*Casey
Clark
Population Group: Low Inc—Clark
*Clay (g)
Facility: FCI Manchester
*Crittenden
*Cumberland
Population Group: Low Inc—Cumberland Co
Daviess
Population Group: Low Inc—Daviess

PRIMARY MEDICAL CARE: Kentucky
County Listing

County Name

*Edmonson
*Elliott
*Estill
Population Group: Low Inc—Estill
Fayette
Population Group: Low Inc—N Central Lexington
*Fleming
Population Group: Low Inc—Fleming
*Floyd
Population Group: Low Inc—Mud Creek
*Gallatin
*Garrard
*Grayson
Population Group: Low Inc—Grayson Co
*Green
Population Group: Low Inc—Green Co
*Hancock
*Harlan
Population Group: Low Inc—Harlan
Facility: Clover Fork Clinic
*Hart
*Henry
*Hickman
*Jackson
Jefferson
Population Group: Low Inc—West End Louisville
*Johnson
Population Group: Low Inc—Johnson Co
*Knott
Population Group: Low Inc—Knott
*Knox
*Larue
Population Group: Low Inc—Larue
*Laurel
Population Group: Low Inc—Laurel
*Lawrence
Population Group: Low Inc—Lawrence Co
*Leslie
Population Group: Low Inc—Leslie Co
*Lewis
*Livingston
Population Group: Low Inc—Livingston
*Lyon
Facility: Ky. State Pen.
Madison
Population Group: Low Inc—Madison Co
*Magoffin
*Marion
Population Group: Low Inc—Marion
*Martin
*McCreary
Population Group: Low Inc—Mccreary
*McLean
*Meade
*Menifee
*Metcalfe
*Morgan
Population Group: Low Inc—Morgan Co
Facility: Eastern Ky. Corr. Complex
*Muhlenberg
*Nicholas
*Ohio
Oldham
Facility: Ky. State Ref.
*Owen
*Owsley
*Pendleton
*Perry
Service Area: Buckhorn
Population Group: Low Inc—Hazard

PRIMARY MEDICAL CARE: Kentucky
County Listing

County Name

*Powell
*Robertson
*Rockcastle
Population Group: Low Inc—Rockcastle
*Simpson
*Spencer
*Todd
*Trigg
*Trimble
*Union
Population Group: Low Inc—Union
*Wayne
Population Group: Low Inc—Wayne Co
*Webster
Population Group: Low Inc—Webster
*Whitley
Service Area: Williamsburg/Saxton
*Wolfe

PRIMARY MEDICAL CARE: Kentucky
Service Area Listing

Service Area Name

Buckhorn
County—Perry
Parts:
Buckhorn Division
Williamsburg/Saxton
County—Bell
Parts:
Pruden-Fonde Division
County—Whitley
Parts:
Pearl Division
Saxton Division
Siler Division
Williamsburg Division

PRIMARY MEDICAL CARE: Kentucky
Population Group Listing

Population Group

Low Inc—Anderson
County—Anderson
Parts:
Low Income
Low Inc—Bath
County—Bath
Parts:
Low Income
Low Inc—Breckinridge Co
County—Breckinridge
Parts:
Low Income
Low Inc—Clark
County—Clark
Parts:
Low Income
Low Inc—Cumberland Co
County—Cumberland
Parts:
Low Income
Low Inc—Daviess
County—Daviess
Parts:
Low Income
Low Inc—Estill
County—Estill
Parts:
Low Income
Low Inc—Fleming
County—Fleming

PRIMARY MEDICAL CARE: Kentucky
Population Group Listing

Population Group

Parts:
Low Income
Low Inc—Grayson Co
County—Grayson
Parts:
Low Income
Low Inc—Green Co
County—Green
Parts:
Low Income
Low Inc—Harlan
County—Harlan
Parts:
Low Income
Low Inc—Hazard
County—Perry
Parts:
Defiance-Vigor CCD
Hazard CCD
Krypton CCD
Viper CCD
Low Inc—Inner City Newport
County—Campbell
Parts:
C.T. 501–506
Low Inc—Johnson Co
County—Johnson
Parts:
Low Income
Low Inc—Knott
County—Knott
Parts:
Low Income
Low Inc—Larue
County—Larue
Parts:
Low Income
Low Inc—Laurel
County—Laurel
Parts:
Low Income
Low Inc—Lawrence Co
County—Lawrence
Parts:
Low Income
Low Inc—Leslie Co
County—Leslie
Parts:
Low Income
Low Inc—Livingston
County—Livingston
Parts:
Low Income
Low Inc—Madison Co
County—Madison
Parts:
Low Income
Low Inc—Marion
County—Marion
Parts:
Low Income
Low Inc—Mccreary
County—McCreary
Parts:
Low Income
Low Inc—Morgan Co
County—Morgan
Parts:
Low Income
Low Inc—Mud Creek
County—Floyd
Parts:

PRIMARY MEDICAL CARE: Kentucky
Population Group Listing

Population Group

McDowell CCD
Mud Creek CCD
Wheelwr-Weeksbury CCD
Low Inc—N Central Lexington
County—Fayette
Parts:
C.T. 1–5
C.T. 8–14
C.T. 18–19
C.T. 38.01
Low Inc—Rockcastle
County—Rockcastle
Parts:
Low Income
Low Inc—Union
County—Union
Parts:
Low Income
Low Inc—Wayne Co
County—Wayne
Parts:
Low Income
Low Inc—Webster
County—Webster
Parts:
Low-Income
Low Inc—West End Louisville
County—Jefferson
Parts:
C.T. 1–18
C.T. 20–24
C.T. 27–28
C.T. 30
C.T. 34–35

PRIMARY MEDICAL CARE: Kentucky
Facility Listing

Facility Name

Clover Fork Clinic 1
County—Harlan
Eastern Ky. Corr. Complex
County—Morgan
FCI Manchester
County—Clay
Ky. State Pen.
County—Lyon
Ky. State Ref.
County—Oldham

PRIMARY MEDICAL CARE: Louisiana
Parish Listing

Parish Name

Acadia
Population Group: Low Inc—Acadia Co
*Allen (g)
Facility: FCI Oakdale
*Ascension
Service Area: Ascension/Northeast Iberville
Service Area: Donaldsonville
*Assumption
*Avoyelles
*Bienville
Calcasieu
Service Area: Dequincy
Service Area: North Lake Charles
Service Area: Vinton
Facility: Moss Reg Med Ctr Outpt Clinic
*Caldwell
*Cameron
*Claiborne

PRIMARY MEDICAL CARE: Louisiana
Parish Listing

Parish Name

Population Group: Low Inc—Claiborne
*Concordia
*De Soto
East Baton Rouge
Population Group: Low Inc—Eden Park
*East Carroll
*East Feliciana
*Grant
*Iberia
Population Group: Low Inc—Iberia Parish
*Iberville
Service Area: Ascension/Northeast Iberville
*Jackson
*Jefferson Davis
Population Group: Low Inc—SW Jefferson Davis Parish
*Lasalle
*Lincoln
Livingston
Service Area: Livingston Service Area
*Madison
*Natchitoches
Service Area: NW Natchitoches Co
Orleans
Service Area: Lower 9th Ward
Population Group: Low Inc—Midtown
Population Group: Low Inc—Gert Town
Population Group: Low Inc—Gentilly Woods
Population Group: Low Inc—Irish Channel/Central City
Population Group: Medicaid Eligible—Algiers/Fisher
Facility: Health Care For Homeless Clinic
Ouachita
Population Group: Medicaid Elig—Monroe City (E. Pt)
Plaquemines
Service Area: Plaquemines East
Service Area: Plaquemines West
*Pointe Coupee
Rapides
Population Group: Med Eligible—Rapides Par
*Sabine
St Bernard
St Charles
St Landry
Population Group: Low Inc—St. Landry Parish
St Martin
*St Mary
Population Group: Low Inc—St. Mary Par
*Tangipahoa
Service Area: Northern Tangipahoa
Facility: Lallie Kemp Hosp. Outpatient Unit
*Tensas
Terrebonne
Facility: Leonard J. Chabert Medical Center
*Union
*Vermilion
*Vernon
*West Feliciana
Population Group: Low Inc—W Feliciana Parish
*Winn

PRIMARY MEDICAL CARE: Louisiana
Service Area Listing

Service Area Name

Ascension/Northeast Iberville
Parts:
District 7–a
District 6–b
District 6–a
District 5
District 4–b
District 4–a
District 3
District 7–b
Parish—Iberville
Parts:
District 4
District 3
Dequincy
Parish—Calcasieu
Parts:
C.T. 24
Donaldsonville
Parts:
C.T. 308–310
Livingston Service Area
Parish—Livingston
Parts:
District 6
District 1
District 9
District 8
District 7
Lower 9Th Ward
Parish—Orleans
Parts:
C.T. 7.01–7.02
C.T. 8
C.T. 9.01–9.04
North Lake Charles
Parish—Calcasieu
Parts:
C.T. 2–4
C.T. 14–15
Northern Tangipahoa
Parish—Tangipahoa
Parts:
C.T. 9532–9536
NW Natchitoches Co
Parish—Natchitoches
Parts:
C.T. 9904
C.T. 9907
Plaquemines East
Parish—Plaquemines
Parts:
District 1
Plaquemines West
Parish—Plaquemines
Parts:
District 6
District 5
District 9
District 8
District 7
Vinton
Parish—Calcasieu
Parts:
C.T. 35–36

PRIMARY MEDICAL CARE: Louisiana
Population Group Listing

Population Group

Low Inc—Acadia Co 2
Parish—Acadia
Parts:
Low Income
Low Inc—Claiborne
Parish—Claiborne
Parts:
Low Income
Low Inc—Eden Park
Parish—East Baton Rouge
Parts:
C.T. 8–10
C.T. 12–17
C.T. 21–25
C.T. 28
C.T. 40.07–40.08
Low Inc—Gentilly Woods
Parish—Orleans
Parts:
C.T. 17.02
Low Inc—Gert Town
Parish—Orleans
Parts:
C.T. 70
C.T. 72
C.T. 72
C.T. 75
C.T. 75.02
C.T. 76.05
C.T. 129–132
Low Inc—Iberia Parish
Parish—Iberia
Parts:
Low Income
Low Inc—Irish Channel/Central City
Parish—Orleans
Parts:
C.T. 68
C.T. 77–80
C.T. 81.01–81.02
C.T. 82–89
C.T. 91–92
C.T. 93.01–93.02
C.T. 94
Low Inc—Midtown
Parish—Orleans
Parts:
C.T. 11
C.T. 13.01–13.04
C.T. 14.01–14.02
C.T. 15–16
C.T. 17.03
C.T. 17.06
C.T. 17.98
C.T. 19–23
C.T. 27–31
C.T. 33.06–33.07
C.T. 34–36
C.T. 39–40
C.T. 44.01–44.02
Low Inc—St. Landry Parish
Parish—St Landry
Parts:
Low Income
Low Inc—St. Mary Par
Parish—St Mary
Parts:
Low Income
Low Inc—SW Jefferson Davis Parish
Parish—Jefferson Davis
Parts:
C.T. 9806
C,T. 9807
Low Inc—W Feliciana Parish
Parish—West Feliciana
Parts:
Low Income
Med Eligible—Rapides Par
Parish—Rapides
Parts:
Medicaid Eligible
Medicaid Elig—Monroe City (E. Pt)
Parish—Ouachita
Parts:
C.T. 3
C.T. 6–15
C.T. 106.01
C.T. 106.03
Medicaid Eligible—Algiers/Fisher
Parish—Orleans
Parts:
C.T. 1–4
C.T. 6.01–6.05

PRIMARY MEDICAL CARE: Louisiana
Facility Listing

Facility Name

FCI Oakdale 1
Parish—Allen
Health Care For Homeless Clinic
Parish—Orleans
Lallie Kemp Hosp. Outpatient Unit
Parish—Tangipahoa
Leonard J. Chabert Medical Center
Parish—Terrebonne
Moss Reg Med Ctr Outpt Clinic
Parish—Calcasieu

PRIMARY MEDICAL CARE: Maine
County Listing

County Name

Androscoggin
Service Area: Jay/Livermore Falls
*Aroostook
Service Area: Ashland PCAA
Service Area: Danforth
Service Area: St. Francis
Service Area: Van Buren
Population Group: Amer Ind—Micmacs
Population Group: Low Inc—Houlton PCAA
Population Group: Low Inc—Island Falls
Population Group: Low Inc—Mars Hill PCAA
Population Group: Low Inc—Ft. Kent
Population Group: Low Inc—Lincoln
Cumberland
Service Area: Casco Bay Islands
Service Area: Sacopee Valley Region
Population Group: Homeless—Portland
*Franklin
Service Area: Jay/Livermore Falls
Service Area: Rangeley
Population Group: Low Inc—Rumford
*Kennebec
Service Area: Jay/Livermore Falls
Population Group: Low Inc—Richmond PCAA
*Knox
Population Group: Low Inc—Penobscot Bay Islands
Facility: ME State Prison/Me Corr Inst—Thomaston
*Lincoln

PRIMARY MEDICAL CARE: Maine
County Listing

County Name

Population Group: Low Inc—Richmond PCAA
Population Group: Low Inc—Damariscotta
*Oxford
Service Area: Bethel
Service Area: Jay/Livermore Falls
Service Area: Rangeley
Service Area: Sacopee Valley Region
Population Group: Low Inc—Rumford
Penobscot
Service Area: Corinth
Service Area: Danforth
Service Area: Howland
Population Group: Low Inc—Millinocket PCAA 44
Population Group: Low Inc—Island Falls
Population Group: Low Inc—Dexter
Population Group: Low Inc—Lincoln
Population Group: Penobscot Nat Amer Tribe
*Piscataquis
Service Area: Bingham
Population Group: Low Inc—Millinocket PCAA 44
Population Group: Low Inc—Greenville PCAA
Population Group: Low Inc—Milo PCAA
Population Group: Low Inc—Skowhegan #26
*Sagadahoc
Population Group: Low Inc—Richmond PCAA
*Somerset
Service Area: Bingham
Service Area: Jackman
Population Group: Low Inc—Greenville PCAA
Population Group: Low Inc—Dexter
Population Group: Low Inc—Skowhegan #26
Waldo
Population Group: Low Inc—Belfast
*Washington
Service Area: Danforth
Service Area: Eastport
Service Area: Jonesport
Service Area: Topsfield
Population Group: Low Inc—Lubec
Population Group: Low Inc—Machias
Population Group: Low Inc—Calais PCAA
Population Group: Low Inc—Milbridge
York
Service Area: Sacopee Valley Region

PRIMARY MEDICAL CARE: Maine
Service Area Listing

Service Area Name

Ashland PCAA
County—Aroostook
Parts:
Ashland Town
Garfield Plantation
Masardis Town
Nashville Plantation
Oxbow Plantation
Portage Lake Town
Bethel
County—Oxford
Parts:
Bethel Town
Gilead Town

PRIMARY MEDICAL CARE: Maine
Service Area Listing

Service Area Name

Greenwood Town
Newry Town
North Oxford Unorg.
Upton Town
Woodstock Town
Bingham
County—Piscataquis
Parts:
Kingsbury Plantation
County—Somerset
Parts:
Bingham Town
Brighton Plantation
Caratunk Town
Moscow Town
Northeast Somerset Unorg.
Pleasant Ridge Plantation
Solon Town
The Forks Plantation
West Forks Plantation
Casco Bay Islands
County—Cumberland
Parts:
Cliff Is.
Cushing Is.
Great Chebeague Is.
Great Diamond Is.
Little Chebeague Is.
Little Diamond Is.
Long Is.
Peak's Is.
Corinth
County—Penobscot
Parts:
Bradford Town
Charleston Town
Corinth Town
Exeter Town
Hudson Town
Danforth
County—Aroostook
Parts:
Bancroft Town
Orient Town
Weston Town
County—Penobscot
Parts:
Drew Plantation
Kingman Unorg.
Prentiss Plantation
County—Washington
Parts:
Danforth Town
Eastport
County—Washington
Parts:
Eastport City
Passamaquoddy Pleasant Point Res
Pembroke Town
Perry Town
Howland
County—Penobscot
Parts:
Burlington Town
East Central Penobscot Unorg.
Edinburg Town
Enfield Town
Howland Town
Lagrange Town
Lowell Town
Maxfield Town
Passadumkeag Town

PRIMARY MEDICAL CARE: Maine
Service Area Listing

Service Area Name

Seboeis Plantation
Jackman
County—Somerset
Parts:
Dennistown Plantation
Jackman Town
Moose River Town
Jay/Livermore Falls
County—Androscoggin
Parts:
Livermore Falls Town
Livermore Town
County—Franklin
Parts:
Jay Town
County—Kennebec
Parts:
Fayette Town
County—Oxford
Parts:
Canton Town
Hartford Town
Sumner Town
Jonesport
County—Washington
Parts:
Addison Town
Beals Town
Centerville Town
Columbia Falls Town
Jonesboro Town
Jonesport Town
Rangeley
County—Franklin
Parts:
Coplin Plantation
Dallas Plantation
Eustis Town
Madrid Town
North Franklin Unorg.
Rangeley Plantation
Rangeley Town
Sandy River Plantation
County—Oxford
Parts:
Lincoln Plantation
Magalloway Plantation
North Oxford Unorg.
Sacopee Valley Region
County—Cumberland
Parts:
Baldwin Town
County—Oxford
Parts:
Hiram Town
Porter Town
County—York
Parts:
Cornish Town
Limerick Town
Parsonsfield Town
St. Francis
County—Aroostook
Parts:
Allagash Town
St. Francis Town
St. John Plantation
Topsfield
County—Washington
Parts:
Codyville Plantation
Grand Lake Stream Plantation

PRIMARY MEDICAL CARE: Maine
Service Area Listing

Service Area Name

North Washington Unorg.
Passamaquoddy Indian Township Re
Talmadge Town
Topsfield Town
Vanceboro Town
Waite Town
Van Buren
County—Aroostook
Parts:
Grand Isle Town
Hamlin Town
Van Buren Town

PRIMARY MEDICAL CARE: Maine
Population Group Listing

Population Group

Amer Ind—Micmacs
County—Aroostook
Parts:
Castle Hill Town
Chapman Town
Easton Town
Mapleton Town
Presque Isle City
Wade Town
Homeless—Portland
County—Cumberland
Parts:
C.T. 1–13
Low Inc—Belfast
County—Waldo
Parts:
Belfast City
Belmont Town
Brooks Town
Jackson Town
Knox Town
Liberty Town
Monroe Town
Montville Town
Morrill Town
Northport Town
Searsmont Town
Searsport Town
Stockton Springs Town
Swanville Town
Waldo Town
Low Inc—Calais PCAA
County—Washington
Parts:
Alexander Town
Baileyville Town
Baring Town
Calais City
Charlotte Town
Cooper Town
Crawford Town
Meddybemps Town
Plantation #21
Princeton Town
Robbinston Town
Low Inc—Damariscotta
County—Lincoln
Parts:
Alna Town
Boothbay Harbor Town
Boothbay Town
Bremen Town
Bristol Town
Damariscotta Town
Edgecombe Town

PRIMARY MEDICAL CARE: Maine
Population Group Listing

Population Group

Jefferson Town
Monhegan Plantation
Newcastle Town
Nobleboro Town
South Bristol Town
Southport Town
Waldoboro Town
Low Inc—Dexter
County—Penobscot
Parts:
Corinna Town
Dexter Town
Garland Town
County—Somerset
Parts:
Cambridge Town
Ripley Town
Low Inc—Ft. Kent
County—Aroostook
Parts:
Eagle Lake Town
Fort Kent Town
Frenchville Town
Madawaska Town
New Canada Town
St. Agatha Town
Wallagras Plt.
Winterville Plt.
Low Inc—Greenville PCAA
County—Piscataquis
Parts:
Beaver Cove Town
Blanchard Plantation
Greenvilletown
Monsontown
NE Piscataquis (Sw 1/3)
NW Piscataquis
Shirleytown
Willimantic Town
County—Somerset
Parts:
NE Somerset (North 2/3)
Seboomook Lake Town
Low Inc—Houlton PCAA
County—Aroostook
Parts:
Amity Town
Cary Plantation
Cental Aroostook Unorg.
Glenwood Plantation
Hammond Plantation
Haynesville Town
Hodgdon Town
Houlton Town
Linneus Town
Littleton Town
Ludlow Town
Merrill Town
Monticello Town
New Limerick Town
Oakfield Town
Reed Plantation
Smyrna Town
Low Inc—Island Falls
County—Aroostook
Parts:
Crystal Town
Dyer Brook Town
Hersey Town
Island Falls
Moro Plantation
S. Aroostook Un. (N 2/3)

PRIMARY MEDICAL CARE: Maine
Population Group Listing

Population Group

Sherman Town
County—Penobscot
Parts:
Mt. Chase Town
N. Penobscot Un. (N 1/3)
Pattentown
Stacyville Town
Low Inc—Lincoln
County—Aroostook
Parts:
Macwahoc Plt
South Aroostook Unorg
County—Penobscot
Parts:
Carroll Plt
Chester Town
Lakeville Towm
Lee Town
Lincoln Town
Mattawamkeag Town
Springfield Town
Twombley Unorg
Webster Plt
Winn Town
Woodville Town
Low Inc—Lubec
County—Washington
Parts:
Dennysville Town
East Central Wash. Unorg.
Lubec Town
Whiting Town
Low Inc—Machias
County—Washington
Parts:
Cutler Town
East Machias Town
Machias Town
Machiasport Town
Marshfield Town
Northfield Town
Roque Bluffs Town
Wesley Town
Whitneyville Town
Low Inc—Mars Hill PCAA
County—Aroostook
Parts:
Blaine Town
Bridgewater Town
E. Plantation
Mars Hill Town
Westfield Town
Low Inc—Milbridge
County—Washington
Parts:
Beddington Town
Cherryfield Town
Columbia Town
Deblois Town
Harrington Town
Milbridge Town
Steuben Town
Low Inc—Millinocket PCAA 44
County—Penobscot
Parts:
East Millinocket Town
Medway Town
Millinocket Town
N Penobscot (S 2/3)
County—Piscataquis
Parts:
NE Piscataquis (N 1/3)

PRIMARY MEDICAL CARE: Maine
Population Group Listing

Population Group

Low Inc—Milo PCAA
County—Piscataquis
Parts:
Atkinson Town
Brownville Town
Lake View Plantation
Medford Town
Milo Town
NE Piscataquis (Se 1/3)
Sebec Town
SE Piscataquis Unorg
Low Inc—Penobscot Bay Islands
County—Knox
Parts:
Matinicus Isle Plt
North Haven Town
Vinalhaven Town
Low Inc—Richmond PCAA
County—Kennebec
Parts:
Litchfield
County—Lincoln
Parts:
Dresden
County—Sagadahoc
Parts:
Bowdoinham
Richmond
Low Inc—Rumford
County—Franklin
Parts:
Carthage Town
Weld Town
County—Oxford
Parts:
Andover Town
Byron Town
Dixfield Town
Hanover Town
Mexico Town
Milton Town
Peru Town
Roxbury Town
Rumford Town
Low Inc—Skowhegan #26
County—Piscataquis
Parts:
Wellington Town
County—Somerset
Parts:
Anson Town
Athens Town
Canaan Town
Central Somerset Unorg
Cornville Town
Embden Town
Harmony Town
Highland Town
Madison Town
Mercer Town
New Portland Town
Norridgewock Town
Skowhegan Town
Smithfield Town
Starks Town
Penobscot Nat Amer Tribe
County—Penobscot
Parts:
Old Town City

PRIMARY MEDICAL CARE: Maine
Facility Listing

Facility Name

ME State Prison/Me Corr Inst—Thomaston
County—Knox

PRIMARY MEDICAL CARE: Maryland
County Listing

County Name

Allegany
Service Area: George's Creek
Service Area: Hancock (MD/PA)
Facility: FCI Cumberland
Baltimore
Baltimore City (Indep)
Service Area: Middle River
Population Group: Low Inc—West Baltimore City
Population Group: Low Inc—East Baltimore City
Population Group: Low Inc—North Central Baltimore
Population Group: Low Inc—W. Central Baltimore
Population Group: Low Inc—Belair Road/Brehm's Lane
Population Group: Low Inc—South Baltimore City
Population Group: Low Inc—Park West
Facility: Healthcare For The Homeless
Calvert
*Caroline
Cecil
*Dorchester
*Garrett
Population Group: Low Inc—Garrett
*Kent
Population Group: Low Inc—Kent
Montgomery
Population Group: Low Inc—S Central Montgomery Co
Population Group: Low Inc—Langley Park
Facility: Projecto Salud Facility
Prince Georges
Population Group: Low Inc—Langley Park
Queen Annes
*Somerset
Population Group: Low Inc—Somerset
Facility: Eastern Corr Inst
Washington
Service Area: Hancock (MD/PA)
Population Group: Low Inc—Hagerstown
*Wicomico
Population Group: Low Inc—Wicomico
*Worcester
Population Group: Low Inc—Worcester County

PRIMARY MEDICAL CARE: Maryland
Service Area Listing

Service Area Name

George's Creek
County—Allegany
Parts:
C.T. 13.01
C.T. 14.01
C.T. 15.01–15.03
C.T. 16.01
C.T. 17.01
C.T. 18
C.T. 19.01
C.T. 20.01
C.T. 21–22

PRIMARY MEDICAL CARE: Maryland
Service Area Listing

Service Area Name

Hancock (MD/PA)
County—Allegany
Parts:
District 1, Orleans
County—Washington
Parts:
District 4, Clear Spring
District 5, Hancock
District 15, Indian Spring
Middle River
County—Baltimore
Parts:
C.T. 4507
C.T. 4508.01–4508.02
C.T. 4513–4516

PRIMARY MEDICAL CARE: Maryland
Population Group Listing

Population Group

Low Inc—Belair Road/Brehm's Lane 1
County—Baltimore City (Indep)
Parts:
C.T. 801.01–801.02
C.T. 2601.02
C.T. 2602.01–2602.03
C.T. 2603.01–2603.03
C.T. 2604.02
C.T. 2604.98
C.T. 2701.01
Low Inc—East Baltimore City
County—Baltimore City (Indep)
Parts:
C.T. 301.00
C.T. 302.00
C.T. 501.00
C.T. 602.00
C.T. 603.00
C.T. 1001.00
C.T. 1002.00
C.T. 1003.00
C.T. 1004.00
C.T. 1205.00
C.T. 604.00
C.T. 605.00
C.T. 701.00
C.T. 702.00
C.T. 703.00
C.T. 704.00
C.T. 802.00
C.T. 803.01
C.T. 803.02
C.T. 804.00
C.T. 806.00
C.T. 807.00
C.T. 808.00
C.T. 909.00
Low Inc—Garrett
County—Garrett
Parts:
Low Income
Low Inc—Hagerstown
County—Washington
Parts:
C.T. 3.02
C.T. 4–5
C.T. 6.01–6.02
C.T. 7–9
Low Inc—Kent
County—Kent
Parts:
Low Income

PRIMARY MEDICAL CARE: Maryland
Population Group Listing

Population Group

Low Inc—Langley Park
County—Montgomery
Parts:
C.T. 7019–7020
County—Prince Georges
Parts:
C.T. 8056–8057
Low Inc—North Central Baltimore
County—Baltimore City (Indep)
Parts:
C.T. 805
C.T. 904–908
C.T. 1203–1204
C.T. 1206
Low Inc—Park West
County—Baltimore City (Indep)
Parts:
C.T. 1512–1513
C.T. 2716–2717
C.T. 2718.01–2718.02
C.T. 2801.01
Low Inc—S Central Montgomery Co
County—Montgomery
Parts:
C.T. 7034.04
Low Inc—Somerset
County—Somerset
Parts:
Low Income
Low Inc—South Baltimore City
County—Baltimore City (Indep)
Parts:
C.T. 2101.01
C.T. 2102.01
C.T. 2301–2303
C.T. 2401
C.T. 2404
C.T. 2502.03–2502.05
C.T. 2502.07
C.T. 2503.01–2503.03
C.T. 2504.01–2504.02
C.T. 2505–2506
Low Inc—W. Central Baltimore
County—Baltimore City (Indep)
Parts:
C.T. 1102
C.T. 1207
C.T. 1301–1305
C.T. 1401–1403
C.T. 1501–1506
C.T. 1507.01–1507.02
C.T. 1508.01–1508.02
C.T. 1509–1511
C.T. 1601–1607
C.T. 1608.01–1608.02
C.T. 1701–1703
C.T. 2801.02
C.T. 2802
C.T. 2803.01–2803.02
Low Inc—West Baltimore City
County—Baltimore City (Indep)
Parts:
C.T. 1801–1803
C.T. 1901–1903
C.T. 2001–2005
Low Inc—Wicomico
County—Wicomico
Parts:
Low Income
Low Inc—Worcester County
County—Worcester

PRIMARY MEDICAL CARE: Maryland
Population Group Listing

Population Group

Parts:
Low Income

PRIMARY MEDICAL CARE: Maryland
Facility Listing

Facility Name

Eastern Corr Inst
County—Somerset
FCI Cumberland
County—Allegany
Healthcare For The Homeless
County—Baltimore City (Indep)
Projecto Salud Facility
County—Montgomery

PRIMARY MEDICAL CARE: Massachusetts
County Listing

County Name

Barnstable
Population Group: Homeless—Hyannis
Bristol
Population Group: Low Inc—C Fall River
Population Group: Low Inc—C New Bedford
Essex
Service Area: North Lawrence
Service Area: South Lynn
Population Group: Med Elig—Salem/East Peabody
Hampden
Service Area: Gateway Regional Dist
Population Group: Low Inc—Springfield
Population Group: Low Inc Of Holyoke
Hampshire
Service Area: Gateway Regional Dist
Service Area: Hampshire Regional Dist
Middlesex
Service Area: Community Health Network Area #16
Facility: MCI—Concord
Suffolk
Service Area: Community Health Network Area #16
Service Area: Roxbury
Service Area: SW Dorchester
Population Group: Hmlss—Boston
Worcester
Population Group: Low Inc—Worcester

PRIMARY MEDICAL CARE: Massachusetts
Service Area Listing

Service Area Name

Community Health Network Area #16
County—Middlesex
Parts:
Everett City
County—Suffolk
Parts:
Chelsea City
Revere City
Winthrop Town
Gateway Regional Dist
County—Hampden
Parts:
Blandford Town
Chester Town
Montgomery Town
Russell Town
County—Hampshire

PRIMARY MEDICAL CARE: Massachusetts
Service Area Listing

Service Area Name

Parts:
Huntington Town
Middlefield Town
Worthington Town
Hampshire Regional Dist
County—Hampshire
Parts:
Chesterfield Town
Cummington Town
Goshen Town
Plainfield Town
North Lawrence
County—Essex
Parts:
C.T. 2501–2517
Roxbury
County—Suffolk
Parts:
C.T. 801–809
C.T. 811–821
South Lynn
County—Essex
Parts:
C.T. 2055–2065
C.T. 2068–2072
SW Dorchester
County—Suffolk
Parts:
C.T. 923–924
C.T. 1001–1005
C.T. 1010.01–1010.02
C.T. 1011.01–1011.02
C.T. 1101.01

PRIMARY MEDICAL CARE: Massachusetts
Population Group Listing

Population Group

Hmlss—Boston
County—Suffolk
Parts:
Long Is Shelter/Ct 1501
Pc Clinic/Bc Hosp/Ct 710
Pine Street Inn/C.T. 712
Shattuck Ctr/Ct 1101.02
St. Francis Hse/Ct 1206
Homeless—Hyannis
County—Barnstable
Parts:
C.T. 124
C.T. 126
Low Inc—C Fall River
County—Bristol
Parts:
C.T. 6408–6414
C.T. 6419–6420
Low Inc—C New Bedford
County—Bristol
Parts:
C.T. 6504–6509
C.T. 6510.02
C.T. 6511–6518
C.T. 6518.99–6519.00
C.T. 6520–6527
Low Inc—Springfield
County—Hampden
Parts:
C.T. 8001
C.T. 8002.01–8002.02
C.T. 8003–8010
C.T. 8011.01–8011.02
C.T. 8012–8013

PRIMARY MEDICAL CARE: Massachusetts
Population Group Listing

Population Group

C.T. 8014.01–8014.02
C.T. 8015.01–8015.03
C.T. 8016.01–8016.05
C.T. 8017–8025
C.T. 8026.01–8026.02
Low Inc—Worcester
County—Worcester
Parts:
C.T. 7301–7303
C.T. 7304.01–7304.02
C.T. 7305–7307
C.T. 7308.01–7308.02
C.T. 7309.01–7309.02
C.T. 7310
C.T. 7311.01–7311.02
C.T. 7312.01–7312.02
C.T. 7313–7319
C.T. 7320.01–7320.02
C.T. 7321
C.T. 7322.01–7322.03
C.T. 7323–7328
C.T. 7329.01–7329.02
C.T. 7330
C.T. 7331.01–7331.02
Low Inc Of Holyoke
County—Hampden
Parts:
C.T. 8114–8118
C.T. 8120
Med Elig—Salem/East Peabody
County—Essex
Parts:
C.T. 2042–2043
C.T. 2045–2046
C.T. 2107–2108

PRIMARY MEDICAL CARE: Massachusetts
Facility Listing

Facility Name

MCI—Concord 3
County—Middlesex

PRIMARY MEDICAL CARE: Michigan
County Listing

County Name

*Alcona
*Alger
Population Group: Low Inc—Alger Co
Facility: Alger Max Fac
Allegan
Service Area: Allegan
*Alpena
Population Group: Low Inc—Alpena Co
*Antrim
Service Area: Mancelona
Population Group: Low Inc—East Jordan
*Arenac
Service Area: Sterling/Standish
Bay
Service Area: Sterling/Standish
*Benzie
Population Group: Low Inc—Benzie Co
Berrien
Population Group: Low Inc—Berrien Co
*Branch
Population Group: Low Inc—Branch Co
Calhoun
Population Group: Low Inc—Calhoun Co
*Cass
Service Area: Dowagiac

PRIMARY MEDICAL CARE: Michigan
County Listing

County Name

*Charlevoix
Service Area: Beaver Island
Population Group: Low Inc—East Jordan
*Cheboygan
Population Group: Low Inc—Cheboygan Co
*Chippewa
Population Group: Low Inc—Chippewa Co
Facility: Chippewa Cty Corr Inst
*Clare
*Crawford
Population Group: Low Inc—Crawford Co
*Delta
Population Group: Low Inc—Delta Co
*Dickinson
Population Group: Low Inc—Dickinson Co
*Emmet
Population Group: Little Traverse Bay Band Of Odawa Indian
Genesee
Service Area: Otter Lake
Population Group: Low Inc—Flint
*Gladwin
Population Group: Low Inc—Gladwin Co
*Gogebic
Population Group: Low Inc—Ewen
Population Group: Low Inc—Ironwood/Hurley (MI/WI)
*Grand Traverse
Population Group: Low Inc—Cadillac/Buckley
*Gratiot
Population Group: Low Inc—Gratiot Co
*Hillsdale
Population Group: Low Inc—Hillsdale Co
*Houghton
Population Group: Low Inc—Houghton Co
*Huron
Service Area: Pigeon
Service Area: Port Austin
Population Group: Low Inc—Harbor Beach/Bad Axe
*Ionia
Population Group: Low Inc/MFW—Ionia Co
*Iosco
Population Group: Low Inc—Iosco Co
*Iron
Population Group: Low Inc—Iron Co
*Isabella
Population Group: Low Inc—Isabella Co
Kalamazoo
Population Group: Huron Potawatomi, Inc.
Population Group: Low Inc—N Kalamazoo City
*Kalkaska
Kent
Population Group: Low Inc—Grand Rapids
*Keweenaw
*Lake
Lapeer
Service Area: Otter Lake
*Leelanau
Service Area: Northport/Suttons Bay
*Luce
Population Group: Low Inc—Luce Co
*Mackinac
Population Group: Low Inc—Mackinac Co
Macomb
Facility: Macomb Corr Fac
*Manistee
Population Group: Little River Band Of Ottawa Indians, Inc

PRIMARY MEDICAL CARE: Michigan
County Listing

County Name

Population Group: Low Inc—Manistee Co
*Marquette
Service Area: Gwinn
Service Area: Western Marquette
Facility: Marquette Branch Prs
*Mason
Population Group: Low Inc—Mason Co
*Mecosta
*Menominee
Population Group: Low Inc—E Marinette/S Menominee (MI/WI
Population Group: Low Inc—Northern Menominee
*Missaukee
*Montcalm
Population Group: Low Inc—Montcalm Co
*Montmorency
Muskegon
Population Group: Low Inc—Muskegon City
Population Group: Low Inc—Northern Muskegon Co
*Newaygo
Population Group: Low Inc—Newaygo Co
*Oceana
Population Group: Low Inc—Oceana Co
*Ogemaw
Population Group: Low Inc—Ogemaw Co
*Ontonagon
Population Group: Low Inc—Ewen
*Osceola
*Oscoda
*Otsego
Population Group: Low Inc—Otsego Co
*Presque Isle
*Roscommon
Population Group: Low Inc—Roscommon Co
Saginaw
Population Group: Low Inc—Eastside Saginaw
Facility: Saginaw Corr Fac
Facility: Saginaw Cooperative Hosp Inc
*Sanilac
Population Group: Low Inc—Sanilac Co
*Schoolcraft
Population Group: Low Inc—Schoolcraft Co
St Clair
Population Group: Low Inc—St Clair Co
*St Joseph
Population Group: Low Inc—St. Joseph Co
*Tuscola
Service Area: Otter Lake
Service Area: Pigeon
Population Group: Low Inc—Caro/Cass City
Van Buren
Service Area: Dowagiac
Wayne
Service Area: Airport/Conner (N.E. Detroit)
Service Area: Chene (S. Central Detroit)
Service Area: Highland Park
Service Area: Mackenzie/Brooks
Service Area: Nolan/State Fair/Davison/Pershing
Service Area: Southwest Detroit
Service Area: Tireman/Chadsey
Population Group: Low Inc—Eastside Detroit
Population Group: Low Inc—Hamtramck
*Wexford

PRIMARY MEDICAL CARE: Michigan
County Listing

County Name

Population Group: Low Inc—Cadillac/Buckley

PRIMARY MEDICAL CARE: Michigan
Service Area Listing

Service Area Name

Airport/Conner (N.E. Detroit)
County—Wayne
Parts:
C.T. 5033–5037
C.T. 5039–5050
C.T. 5052–5053
C.T. 5107–5109
Allegan
County—Allegan
Parts:
Allegan City
Allegan Township
Cheshire Township
Clyde Township
Dorr Township
Hopkins Township
Lee Township
Leighton Township
Martin Township
Monterey Township
Salem Township
Trowbridge Township
Valley Township
Watson Township
Wayland City
Wayland Township
Beaver Island
County—Charlevoix
Parts:
Peaine Township
St. James Township
Chene (S. Central Detroit)
County—Wayne
Parts:
C.T. 5111
C.T. 5161–5162
C.T. 5173–5180
C.T. 5183–5188
C.T. 5203–5207
C.T. 5218–5219
Dowagiac
County—Cass
Parts:
Dowagiac City
La Grange Township
Marcellus Township
Penn Township
Pokagon Township
Silver Creek Township
Volinia Township
Wayne Township
County—Van Buren
Parts:
Decatur Township
Hamilton Township
Hartford Township
Hartford City
Keeler Township
Porter Township
Gwinn
County—Marquette
Parts:
Ewing Township
Forsyth Township
Turin Township

PRIMARY MEDICAL CARE: Michigan
Service Area Listing

Service Area Name

Wells Township
Highland Park
County—Wayne
Parts:
C.T. 5530–5537
Mackenzie/Brooks
County—Wayne
Parts:
C.T. 5304–5305
C.T. 5308
C.T. 5341–5344
C.T. 5347
C.T. 5350–5355
C.T. 5361
C.T. 5363–5368
C.T. 5370–5373
C.T. 5378
C.T. 5451–5454
C.T. 5460–5461
C.T. 5466-5467
Mancelona
County—Antrim
Parts:
Chestonia Township
Custer Township
Helena Township
Kearney Township
Mancelona Township
Star Township
Nolan/State Fair/Davison/Pershing
County—Wayne
Parts:
C.T. 5061–5080
C.T. 5102–5106
Northport/Suttons Bay
County—Leelanau
Parts:
Leelanau Township
Leland Township
Suttons Bay Township
Otter Lake
County—Genesee
Parts:
Forest Township
County—Lapeer
Parts:
Deerfield Township
Marathon Township
North Branch Township
Rich Township
County—Tuscola
Parts:
Arbela Township
Millington Township
Watertown Township
Pigeon
County—Huron
Parts:
Brookfield Township
Caseville Township
Fairhaven Township
McKinley Township
Sebewaing Township
Winsor Township
County—Tuscola
Parts:
Columbia Township
Port Austin
County—Huron
Parts:
Dwight Township
Gore Township

PRIMARY MEDICAL CARE: Michigan
Service Area Listing

Service Area Name

Hume Township
Huron Township
Lake Township
Pointe Aux Barques Township
Port Austin Township
Southwest Detroit
County—Wayne
Parts:
C.T. 5208–5209
C.T. 5211–5214
C.T. 5231–5238
C.T. 5240–5243
C.T. 5245
C.T. 5247–5248
Sterling/Standish
County—Arenac
County—Bay
Parts:
Gibson Township
Mount Forest Township
Pinconning City
Pinconning Township
Tireman/Chadsey
County—Wayne
Parts:
C.T. 5221–5222
C.T. 5251–5258
C.T. 5260–5265
C.T. 5335–5337
C.T. 5345–5346
Western Marquette
County—Marquette
Parts:
Champion Township
Humboldt Township
Michigamme Township
Republic Township

PRIMARY MEDICAL CARE: Michigan
Population Group Listing

Population Group

Huron Potawatomi, Inc.
County—Kalamazoo
Parts:
Wakeshma Twp
Little River Band Of Ottawa Indians, Inc
County—Manistee
Parts:
American Indians
Little Traverse Bay Band Of Odawa Indian
County—Emmet
Parts:
American Indians
Low Inc—Alger Co
County—Alger
Parts:
Low Income
Low Inc—Alpena Co
County—Alpena
Parts:
Low Income
Low Inc—Benzie Co
County—Benzie
Parts:
Low Income
Low Inc—Berrien Co
County—Berrien
Parts:
Low Income
Low Inc—Branch Co
County—Branch

PRIMARY MEDICAL CARE: Michigan
Population Group Listing

Population Group

Parts:
Low Income
Low Inc—Cadillac/Buckley
County—Grand Traverse
Parts:
Fife Lake Twp
Grant Twp
Mayfield Twp
Paradise Twp
County—Wexford
Parts:
Low Income
Low Inc—Calhoun Co
County—Calhoun
Parts:
Low Income
Low Inc—Caro/Cass City
County—Tuscola
Parts:
Almer Twp
Elkland Twp
Ellington Twp
Elmwood Twp
Indianfields Twp
Novesta Twp
Wells Twp
Low Inc—Cheboygan Co
County—Cheboygan
Parts:
Low Income
Low Inc—Chippewa Co
County—Chippewa
Parts:
Low Income
Low Inc—Crawford Co
County—Crawford
Parts:
Low Income
Low Inc—Delta Co
County—Delta
Parts:
Low Income
Low Inc—Dickinson Co
County—Dickinson
Parts:
Low Income
Low Inc—E Marinette/S Menominee (MI/WI
County—Menominee
Parts:
Ingallston Twp
Mellen Twp
Menominee City
Menominee Twp
Low Inc—East Jordan
County—Antrim
Parts:
Banks Twp
Central Lake Twp
Echo Twp
Forest Home Twp
Jordan Twp
Torch Lake Twp
Warner Twp
County—Charlevoix
Parts:
Boyne Valley Twp
Boyne City City
Chandler Twp
East Jordan City
Evangeline Twp
Eveline Twp
Hudson Twp

PRIMARY MEDICAL CARE: Michigan
Population Group Listing

Population Group

Marion Twp
Melrose Twp
Norwood Twp
South Arm Twp
Wilson Twp
Low Inc—Eastside Detroit
County—Wayne
Parts:
C.T. 5121–5124
C.T. 5126
C.T. 5129
C.T. 5132–5136
C.T. 5139–5143
C.T. 5145–5157
Low Inc—Eastside Saginaw
County—Saginaw
Parts:
C.T. 1–11
C.T. 110
Low Inc—Ewen
County—Gogebic
Parts:
Marenisco Twp
Watersmeet Twp
County—Ontonagon
Parts:
Bergland Twp
Haight Twp
Interior Twp
Matchwood Twp
McMillan Twp
Rockland Twp
Stannard Twp
Low Inc—Flint
County—Genesee
Parts:
C.T. 1–11
C.T. 14–15
C.T. 17–29
C.T. 32
C.T. 34
C.T. 37–38
C.T. 103.02
C.T. 103.04
Low Inc—Gladwin Co
County—Gladwin
Parts:
Low Income
Low Inc—Grand Rapids
County—Kent
Parts:
C.T. 4
C.T. 8–10
C.T. 11.01–11.02
C.T. 12–15
C.T. 19–31
C.T. 36–40
Low Inc—Gratiot Co
County—Gratiot
Parts:
Low Income
Low Inc—Hamtramck
County—Wayne
Parts:
C.T. 5520–5526
Low Inc—Harbor Beach/Bad Axe
County—Huron
Parts:
Bad Axe City
Bingham Twp
Bloomfield Twp
Chandler Twp

PRIMARY MEDICAL CARE: Michigan
Population Group Listing

Population Group

Colfax Twp
Grant Twp
Harbor Beach City
Lincoln Twp
Meade Twp
Oliver Twp
Paris Twp
Rubicon Twp
Sand Beach Twp
Sheridan Twp
Sherman Twp
Sigel Twp
Verona Twp
Low Inc—Hillsdale Co
County—Hillsdale
Parts:
Low Income
Low Inc—Houghton Co
County—Houghton
Parts:
Low Income
Low Inc—Iosco Co
County—Iosco
Parts:
Low Income
Low Inc—Iron Co
County—Iron
Parts:
Low Income
Low Inc—Ironwood/Hurley (MI/WI)
County—Gogebic
Parts:
Bessemer City
Bessemer Twp
Erwin Twp
Ironwood City
Ironwood Twp
Wakefield City
Wakefield Twp
Low Inc—Isabella Co
County—Isabella
Parts:
Low Income
Low Inc—Luce Co
County—Luce
Parts:
Low Income
Low Inc—Mackinac Co
County—Mackinac
Parts:
Low Income
Low Inc—Manistee Co
County—Manistee
Parts:
Low Income
Low Inc—Mason Co
County—Mason
Parts:
Low Income
Low Inc—Montcalm Co
County—Montcalm
Parts:
Low Income
Low Inc—Muskegon City
County—Muskegon
Parts:
C.T. 1–5
C.T. 6.01–6.02
C.T. 7
C.T. 7.99–8.00
C.T. 11–13
C.T. 14.01–14.02

PRIMARY MEDICAL CARE: Michigan
Population Group Listing

Population Group

C.T. 19.02
C.T. 21
C.T. 26.01
Low Inc—N Kalamazoo City
County—Kalamazoo
Parts:
C.T. 1
C.T. 2.01–2.02
C.T. 3
C.T. 4.02
C.T. 5–6
C.T. 8.01–8.02
C.T. 9–10
Low Inc—Newaygo Co
County—Newaygo
Parts:
Low Income
Low Inc—Northern Menominee
County—Menominee
Parts:
Cedarville Twp
Daggett Twp
Faithorn Twp
Gourley Twp
Harris Twp
Holmes Twp
Lake Twp
Meyer Twp
Nadeau Twp
Spalding Twp
Stephenson City
Stephenson Twp
Low Inc—Northern Muskegon Co
County—Muskegon
Parts:
Blue Lake Twp
Cedar Creek Twp
Dalton Twp
Fruitland Twp
Holton Twp
Montague Twp
Montague City
White River Twp
Whitehall City
Whitehall Twp
Low Inc—Oceana Co
County—Oceana
Parts:
Low Income
Low Inc—Ogemaw Co
County—Ogemaw
Parts:
Low Income
Low Inc—Otsego Co
County—Otsego
Parts:
Low Income
Low Inc—Roscommon Co
County—Roscommon
Parts:
Low Income
Low Inc—Sanilac Co
County—Sanilac
Parts:
Low Income
Low Inc—Schoolcraft Co
County—Schoolcraft
Parts:
Low Income
Low Inc—St Clair Co
County—St Clair
Parts:

PRIMARY MEDICAL CARE: Michigan
Population Group Listing

Population Group

Low Income
Low Inc—St. Joseph Co
County—St Joseph
Parts:
Low Income
Low Inc/MFW—Ionia Co
County—Ionia
Parts:
Low Income
MFW

PRIMARY MEDICAL CARE: Michigan
Facility Listing

Facility Name

Alger Max Fac
County—Alger
Chippewa C.T.y Corr Inst
County—Chippewa
Macomb Corr Fac
County—Macomb
Marquette Branch Prs
County—Marquette
Saginaw Cooperative Hosp Inc
County—Saginaw
Saginaw Corr Fac
County—Saginaw

PRIMARY MEDICAL CARE: Minnesota
County Listing

County Name

*Beltrami
Service Area: Northome/Blackduck
*Blue Earth
Service Area: Wells
*Carlton
Population Group: Low Inc—Carlton Co
*Cass
Clay
Service Area: Barnesville
Service Area: Hawley
*Clearwater
*Cook
*Cottonwood
Population Group: Low Income—Westbrook
*Faribault
Service Area: Wells
*Freeborn
Service Area: Wells
*Grant
Service Area: Elbow Lake/Dalton
Hennepin
Service Area: Near North—Minneapolis
Population Group: Am In—S. Central Minneapolis (S)
Population Group: Homeless—North Phillips (S)
Population Group: Low Inc—NE Minneapolis
Population Group: Low Inc—N Minneapolis
Population Group: Native Am—South Phillips (S)
*Hubbard
*Itasca
Service Area: Bigfork
*Jackson
Population Group: Low Inc—Jackson Co
*Kanabec
*Kittson
*Koochiching

PRIMARY MEDICAL CARE: Minnesota
County Listing

County Name

Service Area: Northome/Blackduck
Population Group: Low Inc—Inter Falls (#77)
*Lake
Service Area: Silver Bay
*Lake Of The Woods
Population Group: Low Inc—Lake Of The Woods
*Le Sueur
Population Group: Low Inc—Le Sueur Co
*Lincoln
Service Area: Tyler/Lake Benton #81
*Lyon
Service Area: Tracy
Service Area: Tyler/Lake Benton #81
*Mahnomen
*Marshall
*Murray
*Norman
Olmsted
Facility: Federal Medical Ctr—Rochester
*Otter Tail
Service Area: East Otter Tail County
Service Area: Elbow Lake/Dalton
Service Area: Pelican Rapids #89
*Pine
Population Group: Low Inc—Pine Co
*Pipestone
Service Area: Tyler/Lake Benton #81
Population Group: Low Inc—Pipestone
*Polk
Service Area: Polk/Red Lake
Ramsey
Population Group: Low Inc—Central-Midway
Population Group: Low Inc—Riverview/Dayton's Bluff
Facility: Center International Health
*Red Lake
Service Area: Polk/Red Lake
*Redwood
Service Area: Tracy
*Rock
Population Group: Low Inc—Pipestone
*Sibley
St Louis
Service Area: Cook/Orr
Service Area: Floodwood
Stearns
Service Area: Kimball
Population Group: Low Inc—Belgrade/Brooten
Population Group: Low Inc—Albany
*Todd
*Wadena
Population Group: Low Inc—N Wadena Co
*Waseca
Service Area: Wells
*Wilkin
Service Area: Barnesville

PRIMARY MEDICAL CARE: Minnesota
Service Area Listing

Service Area Name

Barnesville
County—Clay
Parts:
Alliance Township
Barnesville Township
Barnesville City
Comstock City

PRIMARY MEDICAL CARE: Minnesota
Service Area Listing

Service Area Name

Elkton Township
Holy Cross Township
Humboldt Township
Parke Township
Skree Township
Tansem Township
County—Wilkin
Parts:
Atherton Township
Deerhorn Township
Manston Township
Mitchell Township
Prairie View Township
Rothsay City
Tanberg Township
Wolverton City
Bigfork
County—Itasca
Parts:
Alvwood Township
Ardenhurst Township
Balsam Township
Bearville Township
Bigfork City
Bigfork Township
Bowstring Township
Carpenter Township
Effie City
Effie Unorg.
Good Hope Township
Grattan Township
Kinghurst Township
Lake Jessie Township
Liberty Township
Marcell Township
Max Township
Moose Park Township
Northeast Itasca Unorg.
Pomroy Township
Sand Lake Township
Squaw Lake City
Stokes Township
Third River Township
Wirt Township
Cook/Orr
County—St Louis
Parts:
C.T. 151–152
C.T. 155
East Otter Tail County
County—Otter Tail
Parts:
Amor Township
Battle Lake City
Blowers Township
Bluffton City
Bluffton Township
Butler Township
Clitherall City
Clitherall Township
Compton Township
Corliss Township
Dead Lake Township
Deer Creek City
Deer Creek Township
Dent City
Eagle Lake Township
Eastern Township
Edna Township
Effington Township
Elmo Township
Everts Township

PRIMARY MEDICAL CARE: Minnesota
Service Area Listing

Service Area Name

Folden Township
Girard Township
Gorman Township
Henning City
Henning Township
Hobart Township
Homestead Township
Inman Township
Leaf Lake Township
Leaf Mountain Township
New York Mills City
Newton Township
Nidaros Township
Oak Valley Township
Otter Tail Township
Ottertail City
Otto Township
Paddock Township
Parkers Prairie City
Parkers Prairie Township
Perham City
Perham Township
Pine Lake Township
Richville City
Rush Lake Township
Urbank City
Vining City
Wadena City
Woodside Township
Elbow Lake/Dalton
County—Grant
County—Otter Tail
Parts:
Aastad Township
Dalton City
St. Olaf Township
Tumuli Township
Western Township
Floodwood
County—St Louis
Parts:
Alborn Township
Arrowhead Township
Brookston City
Cedar Valley Township
Culver Township
Elmer Township
Fine Lakes Township
Floodwood City
Floodwood Township
Halden Township
Janette Lake Unorg.
Kelsey Township
Lavell Township
McDavitt Township
Meadowlands City
Meadowlands Township
Ness Township
Payne Township
Potshot Lake Unorg.
Prairie Lake Township
Stoney Brook Township
Toivola Township
Van Buren Township
Hawley
County—Clay
Parts:
Cromwell Township
Eglon Township
Felton Township
Felton City
Flowing Township

PRIMARY MEDICAL CARE: Minnesota
Service Area Listing

Service Area Name

Goose Prairie Township
Hagen Township
Hawley City
Hawley Township
Highland Grove Township
Hitterdal City
Keene Township
Riverton Township
Spring Prairie Township
Ulen City
Ulen Township
Kimball
County—Stearns
Parts:
Eden Lake Township
Eden Valley City
Fair Haven Township
Kimball Prairie City
Luxemburg Township
Lynden Township
Maine Prairie Township
Near North—Minneapolis
County—Hennepin
Parts:
C.T. 20–23
C.T. 27–29
C.T. 32–35
C.T. 41–42
Northome/Blackduck
Parts:
Battle Township
Blackduck City
Cormant Township
Durand Township
Funkley City
Hagali Township
Hines Township
Hornet Township
Kelliher City
Kelliher Township
Langor Township
Nebish Township
O'brien Township
Quiring Township
Shooks Township
Shotley Township
Shotley Brook Unorg.
Summit Township
Waskish Township
Woodrow Township
County—Koochiching
Parts:
Big Falls City
East Koochiching Unorg.
Littlefork City
Mizpah City
Nett Lake Unorg.
Northome City
Northome Unorg.
Northwest Koochiching Unorg.
South Koochiching Unorg.
Pelican Rapids #89
County—Otter Tail
Parts:
Candor Township
Dora Township
Dunn Township
Elizabeth Township
Elizabeth City
Erhard City
Erhards Grove Township
Friberg Township

PRIMARY MEDICAL CARE: Minnesota
Service Area Listing

Service Area Name

Lida Township
Maine Township
Maplewood Township
Norwegian Grove Township
Oscar Township
Pelican Rapids City
Pelican Township
Scambler Township
Star Lake Township
Trondhjem Township
Vergas City
Polk/Red Lake
County—Polk
County—Red Lake
Silver Bay
County—Lake
Parts:
Beaver Bay Township
Beaver Bay City
Crystal Bay Township
Lake No. 1 Unorg.
Silver Bay City
Tracy
County—Lyon
Parts:
Amiret Township
Balaton City
Custer Township
Garvin City
Monroe Township
Rock Lake Township
Sodus Township
Tracy City
County—Redwood
Parts:
Gales Township
Johnsonville Township
Lamberton Township
Lamberton City
North Hero Township
Revere City
Springdale Township
Walnut Grove City
Waterbury Township
Tyler/Lake Benton #81
County—Lincoln
Parts:
Diamond Lake Township
Drammen Township
Hope Township
Lake Benton City
Lake Benton Township
Marshfield Township
Tyler City
Verdi Township
County—Lyon
Parts:
Coon Creek Township
Florence City
Shelburne Township
County—Pipestone
Parts:
Aetna Township
Altona Township
Fountain Prairie Township
Ruthton City
Wells
County—Blue Earth
Parts:
Danville Township
Mapleton Township
Mapleton City

PRIMARY MEDICAL CARE: Minnesota
Service Area Listing

Service Area Name

County—Faribault
Parts:
Bricelyn City
Brush Creek Township
Clark Township
Dunbar Township
Easton City
Foster Township
Kiester City
Kiester Township
Lura Township
Minnesota Lake City
Minnesota Lake Township
Seely Township
Walnut Lake Township
Walters City
Wells City
County—Freeborn
Parts:
Alden Township
Alden City
Carlston Township
Conger City
Emmons City
Freeborn Township
Freeborn City
Hartland Township
Hartland City
Manchester Township
Manchester City
Mansfield Township
Nunda Township
Pickerel Lake Township
Twin Lakes City
County—Waseca
Parts:
Byron Township
New Richland Township
New Richland City
Vivian Township
Waldorf City

PRIMARY MEDICAL CARE: Minnesota
Population Group Listing

Population Group

Am In—S. Central Minneapolis (S)
County—Hennepin
Parts:
C.T 87.00
C.T. 94–97
C.T. 100–103
C.T. 109–111
Homeless—North Phillips (S)
County—Hennepin
Parts:
C.T. 57–64
C.T. 69
Low Inc—Albany
County—Stearns
Parts:
Albany Twp
Albany City
Avon City
Avon Twp
Holding Twp
Holdingford City
Krain Twp
St Anthony City
Low Inc—Belgrade/Brooten
County—Stearns
Parts:

PRIMARY MEDICAL CARE: Minnesota
Population Group Listing

Population Group

Belgrade City
Brooten City
Crow Lake Twp
Crow River Twp
Elrosa City
North Fork Twp
Low Inc—Carlton Co
County—Carlton
Parts:
Low Income
Low Inc—Central-Midway
County—Ramsey
Parts:
C.T. 301–302
C.T. 319–327
C.T. 334–340
C.T. 353–355
Low Inc—Inter Falls (#77)
County—Koochiching
Parts:
Intern. Falls City
Island View City
Rainy Lake Unorg
Ranier City
Low Inc—Jackson Co
County—Jackson
Parts:
Low Income
Low Inc—Lake Of The Woods
County—Lake Of The Woods
Parts:
Low Income
Low Inc—Le Sueur Co
County—Le Sueur
Parts:
Low Income
Low Inc—N Minneapolis
County—Hennepin
Parts:
C.T. 7–10
C.T. 13–16
Low Inc—N Wadena Co
County—Wadena
Parts:
Blueberry Twp
Huntersville Twp
Meadow Twp
Menahga City
Nimrod City
Orton Twp
Red Eye Twp
Sebeka City
Shell River Twp
Low Inc—NE Minneapolis
County—Hennepin
Parts:
C.T. 5
C.T. 11
C.T. 17–19
C.T. 24–26
C.T. 30–31
C.T. 36
Low Inc—Pine Co
County—Pine
Parts:
Low Income
Low Inc—Pipestone
County—Pipestone
Parts:
Burke Twp
Eden Twp
Edgerton Twp

PRIMARY MEDICAL CARE: Minnesota
Population Group Listing

Population Group

Elmer Twp
Grange Twp
Gray Twp
Hatfield City
Holland City
Ihlen City
Jasper City
Osborne Twp
Pipestone City
Rock Twp
Sweet Twp
Trosky City
Troy Twp
Woodstock City
County—Rock
Parts:
Battle Plain Twp
Denver Twp
Hardwick City
Jasper City
Rose Dell Twp
Low Inc—Riverview/Dayton's Bluff
County—Ramsey
Parts:
C.T. 306.01
C.T. 307.04
C.T. 309–311
C.T. 315–317
C.T. 330–331
C.T. 342
C.T. 344–345
C.T. 346.01–346.02
C.T. 361
C.T. 370–372
Low Income—Westbrook
County—Cottonwood
Parts:
Amboy Twp
Amo Twp
Ann Twn
Comfrey City
Germantown Twp
Highwater Twp
Jeffers City
Rose Hill Twp
Southbrook Twp
Storden Twp
Storden City
Westbrook Twp
Westbrook City
Native Am—South Phillips (S)
County—Hennepin
Parts:
C.T. 71–73
C.T. 78–79
C.T. 83–86

PRIMARY MEDICAL CARE: Minnesota
Facility Listing

Facility Name

Center International Health 3
County—Ramsey
Federal Medical Ctr—Rochester
County—Olmsted

PRIMARY MEDICAL CARE: Mississippi
County Listing

County Name

*Amite
Service Area: Centreville/Liberty

PRIMARY MEDICAL CARE: Mississippi
County Listing

County Name

*Benton
*Bolivar
Facility: Delta Health Center
*Calhoun
*Carroll
*Chickasaw
*Claiborne
*Clarke
*Clay
*Coahoma
Population Group: Low Inc—Coahoma Co
*Copiah
*Covington
De Soto
Forrest
Service Area: East Leaf River
*George
*Greene
Hancock
Harrison
Population Group: Low Inc—Harrison Co
Hinds
Service Area: Jackson Inner-City
Service Area: West Jackson Inner City
*Holmes
*Humphreys
*Issaquena
Service Area: Issaquena/Sharkey
*Itawamba
Jackson
Service Area: Vancleave/Moss Point
*Jasper
*Jefferson
*Jefferson Davis
*Jones
Population Group: Low Inc—Jones
*Kemper
Lamar
*Lauderdale
Population Group: Low Inc—Lauderdale Co
*Lawrence
*Leake
Madison
*Marion
*Marshall
*Monroe
Population Group: Low Inc—Monroe Co
*Montgomery
*Neshoba
*Newton
*Noxubee
*Panola
*Pearl River
*Perry
*Prentiss
*Quitman
Rankin
Population Group: Low Inc—Eastern Rankin
Population Group: Low Inc—SW Rankin
*Scott
*Sharkey
Service Area: Issaquena/Sharkey
*Simpson
Population Group: Low Inc—Simpson
*Smith
*Sunflower
*Tallahatchie
*Tippah
*Tunica
*Walthall

PRIMARY MEDICAL CARE: Mississippi
County Listing

County Name

*Warren
Population Group: Low Inc—Warren Co
*Webster
*Wilkinson
Service Area: Centreville/Liberty
*Winston
*Yalobusha
*Yazoo

PRIMARY MEDICAL CARE: Mississippi
Service Area Listing

Service Area Name

Centreville/Liberty
County—Amite
County—Wilkinson
East Leaf River
County—Forrest
Parts:
C.T. 1
C.T. 4–6
C.T. 105
Issaquena/Sharkey
County—Issaquena
County—Sharkey
Jackson Inner-City
County—Hinds
Parts:
C.T. 8–11
C.T. 17–20
C.T. 27
C.T. 39
C.T. 103.01
Vancleave/Moss Point
County—Jackson
Parts:
C.T. 402
C.T. 408
C.T. 410
C.T. 412
C.T. 412.99–413.00
C.T. 414–418
West Jackson Inner City
County—Hinds
Parts:
C.T. 24–26
C.T. 30–32

PRIMARY MEDICAL CARE: Mississippi
Population Group Listing

Population Group

Low Inc—Coahoma Co 1
County—Coahoma
Parts:
Low Income
Low Inc—Eastern Rankin
County—Rankin
Parts:
C.T. 201
C.T. 208–209
Low Inc—Harrison Co
County—Harrison
Parts:
Low Income
Low Inc—Jones
County—Jones
Parts:
Low Income
Low Inc—Lauderdale Co
County—Lauderdale
Parts:

PRIMARY MEDICAL CARE: Mississippi
Population Group Listing

Population Group

Low Income
Low Inc—Monroe Co
County—Monroe
Parts:
Low Income
Low Inc—Simpson
County—Simpson
Parts:
Low Income
Low Inc—SW Rankin
County—Rankin
Parts:
C.T. 204.01–204.02
C.T. 210
Low Inc—Warren Co
County—Warren
Parts:
Low Income

PRIMARY MEDICAL CARE: Mississippi
Facility Listing

Facility Name

Delta Health Center
County—Bolivar

PRIMARY MEDICAL CARE: Missouri
County Listing

County Name

*Adair
Population Group: Low Inc—Adair Co
Andrew
*Atchison
Population Group: Low Inc—Atchison Co
*Audrain
Population Group: Low Inc—Audrain Co
*Barry
Population Group: Low Inc—Barry Co
*Barton
Population Group: Low Inc—Barton Co
*Bates
*Benton
*Bollinger
Boone
Population Group: Low Inc—Boone Co
Buchanan
Population Group: Low Inc—Buchanan Co
*Butler
Population Group: Low Inc—Butler
*Caldwell
Population Group: Low Inc—Caldwell Co
*Callaway
Population Group: Low Inc—Callaway
*Camden
Population Group: Low Inc—Camden Co
*Cape Girardeau
Population Group: Low Inc—Cape Girardeau
*Carroll
*Carter
Cass
Population Group: Low Inc—Cass Co
*Cedar
Population Group: Low Inc—Cedar Co
*Chariton
Population Group: Low Inc—Chariton Co
Christian
Population Group: Low Inc—Christian Co
*Clark
Clinton
Population Group: Low Inc—Clinton Co

PRIMARY MEDICAL CARE: Missouri
County Listing

County Name

*Cooper
Population Group: Low Inc—Cooper
*Crawford
Population Group: Low Inc—Crawford Co
*Dade
*Dallas
*Daviess
*De Kalb
Population Group: Low Inc—Dekalb Co
*Dent
Population Group: Low Inc—Dent Co
*Douglas
*Dunklin
Franklin
Population Group: Low Inc—Franklin Co
*Gasconade
Population Group: Low Inc—Gasconade Co
*Gentry
Population Group: Low Inc—Gentry Co
Greene
Population Group: Low Inc—Greene Co
*Grundy
Population Group: Low Inc—Grundy Co
*Harrison
*Henry
Population Group: Low Inc—Henry Co
*Hickory
Population Group: Low Inc—Hickory Co
*Holt
*Howard
Population Group: Low Inc—Howard
*Howell
Population Group: Low Inc—Howell Co
*Iron
Population Group: Low Inc—Iron Co
Jackson
Population Group: Low Inc—Central Kansas City
Population Group: Low Inc—North Kansas City
Jasper
Population Group: Low Inc—Jasper Co
Jefferson
Service Area Festus/De Soto
*Johnson
Population Group: Low Inc—Johnson
*Knox
*Laclede
Population Group: Low Inc—Laclede Co
Lafayette
Population Group: Low Inc—Layfayette
*Lawrence
Population Group: Low Inc—Lawrence Co
*Lewis
Lincoln
*Linn
Population Group: Low Inc—Linn Co
*Livingston
Population Group: Low Inc—Livingston
*Macon
Population Group: Low Inc—Macon Co.
*Madison
Population Group: Low Inc—Madison Co
*Maries
*Marion
Population Group: Low Inc—Marion Co
*McDonald
*Mercer
Population Group: Low Inc—Mercer Co
*Miller
*Moniteau

PRIMARY MEDICAL CARE: Missouri
County Listing

County Name

Population Group: Low Inc—Moniteau Co
*Monroe
Population Group: Low Inc—Monroe Co
*Montgomery
Population Group: Low Inc—Montgomery Co
*Morgan
Population Group: Low Inc—Morgan Co
*New Madrid
Newton
Population Group: Low Inc—Newton Co
*Nodaway
Population Group: Low Inc—Nodaway Co
*Oregon
*Osage
*Ozark
*Pemiscot
Population Group: Low Inc—Pemiscot Co
*Perry
Population Group: Low Inc—Perry Co
*Phelps
Population Group: Low Inc—Phelps Co
*Pike
Population Group: Low Inc—Pike Co
*Polk
Population Group: Low Inc—Polk Co
*Pulaski
*Putnam
*Ralls
Population Group: Low Inc—Ralls Co
*Randolph
Population Group: Low Inc—Randolph Co
Ray
Population Group: Low Inc—Ray Co
*Reynolds
Population Group: Low Inc—Reynolds Co
*Saline
Population Group: Low Inc—Saline Co
*Schuyler
Population Group: Low Inc—Schuyler Co
*Scotland
Population Group: Low Inc—Scotland Co
*Scott
Population Group: Low Inc—Scott Co
*Shannon
*Shelby
Population Group: Low Inc—Shelby Co
*St Clair
Population Group: Low Inc—St. Clair Co
*St Francois
Population Group: Low Inc—St Francois Co
St Louis
Population Group: Low Inc—Kinlock/Berkeley
St Louis City (Indep)
Population Group: Low Inc—Southeast St Louis
Population Group: Low Inc—East Central St Louis
Population Group: Low Inc—West Central St Louis
Population Group: Low Inc—N St Louis City
*Ste Genevieve
Population Group: Low Inc—Ste. Genevieve Co
*Stoddard
*Stone
*Sullivan
*Taney
Population Group: Low Inc—Taney Co

PRIMARY MEDICAL CARE: Missouri
County Listing

County Name

*Texas
*Vernon
Population Group: Low Inc—Vernon Co
Warren
*Washington
*Wayne
Webster
*Worth
Population Group: Low Inc—Worth Co
*Wright

PRIMARY MEDICAL CARE: Missouri
Service Area Listing

Service Area Name

Festus/De Soto
County—Jefferson
Parts:
Big River Township
Central Township
High Ridge Township
Imperial Township
Joachim Township
Meramec Township
Plattin Township
River View Township
Rock Township
Valle Township
Windsor Township

PRIMARY MEDICAL CARE: Missouri
Population Group Listing

Population Group

Low Inc—Adair Co
County—Adair
Parts:
Low Income
Low Inc—Atchison Co
County—Atchison
Parts:
Low Income
Low Inc—Audrain Co
County—Audrain
Parts:
Low Income
Low Inc—Barry Co
County—Barry
Parts:
Low Income
Low Inc—Barton Co
County—Barton
Parts:
Low Income
Low Inc—Boone Co
County—Boone
Parts:
Low Income
Low Inc—Buchanan Co
County—Buchanan
Parts:
Low Income
Low Inc—Butler
County—Butler
Parts:
Low Income
Low Inc—Caldwell Co
County—Caldwell
Parts:
Low Income
Low Inc—Callaway
County—Callaway

PRIMARY MEDICAL CARE: Missouri
Population Group Listing

Population Group

Parts:
Low Income
Low Inc—Camden Co
County—Camden
Parts:
Low Income
Low Inc—Cape Girardeau
County—Cape Girardeau
Parts:
Low Income
Low Inc—Cass Co
County—Cass
Parts:
Low Income
Low Inc—Cedar Co
County—Cedar
Parts:
Low Income
Low Inc—Central Kansas City
County—Jackson
Parts:
C.T. 46–55
C.T. 56.01–56.02
C.T. 57
C.T. 58.01–58.02
C.T. 59.01–59.02
C.T. 60–99
C.T. 100.01–100.02
C.T. 101.03
C.T. 102.01
C.T. 103.01
C.T. 104.01
C.T. 130.01
Low Inc—Chariton Co
County—Chariton
Parts:
Low Income
Low Inc—Christian Co
County—Christian
Parts:
Low Income
Low Inc—Clinton Co
County—Clinton
Parts:
Low Income
Low Inc—Cooper
County—Cooper
Parts:
Low Income
Low Inc—Crawford Co
County—Crawford
Parts:
Low Income
Low Inc—Dekalb Co
County—De Kalb
Parts:
Low Income
Low Inc—Dent Co
County—Dent
Parts:
Low Income
Low Inc—East Central St Louis
County—St Louis City (Indep)
Parts:
C.T. 1171–1172
C.T. 1181
C.T. 1184
C.T. 1186
C.T. 1211
C.T. 1214
C.T. 1222
C.T. 1255–1256

PRIMARY MEDICAL CARE: Missouri
Population Group Listing

Population Group

Low Inc—Franklin Co
County—Franklin
Parts:
Low Income
Low Inc—Gasconade Co
County—Gasconade
Parts:
Low Income
Low Inc—Gentry Co
County—Gentry
Parts:
Low Income
Low Inc—Greene Co
County—Greene
Parts:
Low Income
Low Inc—Grundy Co
County—Grundy
Parts:
Low Income
Low Inc—Henry Co
County—Henry
Parts:
Low Income
Low Inc—Hickory Co
County—Hickory
Parts:
Low Income
Low Inc—Howard
County—Howard
Parts:
Low Income
Low Inc—Howell Co
County—Howell
Parts:
Low Income
Low Inc—Iron Co
County—Iron
Parts:
Low Income
Low Inc—Jasper Co
County—Jasper
Parts:
Low Income
Low Inc—Johnson
County—Johnson
Parts:
Low Income
Low Inc—Kinlock/Berkeley
County—St Louis
Parts:
C.T. 2127–2129
C.T. 2134
Low Inc—Laclede Co
County—Laclede
Parts:
Low Income
Low Inc—Lawrence Co
County—Lawrence
Parts:
Low Income
Low Inc—Layfayette
County—Lafayette
Parts:
Low Income
Low Inc—Linn Co
County—Linn
Parts:
Low Income
Low Inc—Livingston
County—Livingston
Parts:

PRIMARY MEDICAL CARE: Missouri
Population Group Listing

Population Group

Low Income
Low Inc—Macon Co.
County—Macon
Parts:
Low Income
Low Inc—Madison Co
County—Madison
Parts:
Low Income
Low Inc—Marion Co
County—Marion
Parts:
Low Income
Low Inc—Mercer Co
County—Mercer
Parts:
Low Income
Low Inc—Moniteau Co
County—Moniteau
Parts:
Low Income
Low Inc—Monroe Co
County—Monroe
Parts:
Low Income
Low Inc—Montgomery Co
County—Montgomery
Parts:
Low Income
Low Inc—Morgan Co
County—Morgan
Parts:
Low Income
Low Inc—N St Louis City
County—St Louis City (Indep)
Parts:
C.T. 1053–1055
C.T. 1061–1067
C.T. 1071–1077
C.T. 1081–1082
C.T. 1085
C.T. 1096–1097
C.T. 1101–1105
C.T. 1111–1115
C.T. 1122–1123
C.T. 1192
C.T. 1201–1203
C.T. 1211–1213
C.T. 1257
C.T. 1266–1267
Low Inc—Newton Co
County—Newton
Parts:
Low Income
Low Inc—Nodaway Co
County—Nodaway
Parts:
Low Income
Low Inc—North Kansas City
County—Jackson
Parts:
C.T. 1–4
C.T. 5.01
C.T. 6–27
C.T. 28.01–28.02
C.T. 29–34
C.T. 35.01–35.02
C.T. 36.01–36.02
C.T. 37–45
C.T. 59.01
Low Inc—Pemiscot Co
County—Pemiscot
Parts:
Low Income
Low Inc—Perry Co
County—Perry
Parts:
Low Income
Low Inc—Phelps Co
County—Phelps
Parts:
Low Income
Low Inc—Pike Co
County—Pike
Parts:
Low Income
Low Inc—Polk Co
County—Polk
Parts:
Low Income
Low Inc—Ralls Co
County—Ralls
Parts:
Low Income
Low Inc—Randolph Co
County—Randolph
Parts:
Low Income
Low Inc—Ray Co
County—Ray
Parts:
Low Income
Low Inc—Reynolds Co
County—Reynolds
Parts:
Low Income
Low Inc—Saline Co
County—Saline
Parts:
Low Income
Low Inc—Schuyler Co
County—Schuyler
Parts:
Low Income
Low Inc—Scotland Co
County—Scotland
Parts:
Low Income
Low Inc—Scott Co
County—Scott
Parts:
Low Income
Low Inc—Shelby Co
County—Shelby
Parts:
Low Income
Low Inc—Southeast St Louis
County—St Louis City (Indep)
Parts:
C.T. 1014–1015
C.T. 1018
C.T. 1018.99
C.T. 1155–1157
C.T. 1164–1165
C.T. 1173–1174
C.T. 1185
C.T. 1221
C.T. 1224
C.T. 1231–1235
C.T. 1241–1243
C.T. 1246
Low Inc—St Francois Co
County—St Francois
Parts:
Low Income
Low Inc—St. Clair Co
County—St Clair
Parts:
Low Income
Low Inc—Ste. Genevieve Co
County—Ste Genevieve
Parts:
Low Income
Low Inc—Taney Co
County—Taney
Parts:
Low Income
Low Inc—Vernon Co
County—Vernon
Parts:
Low Income
Low Inc—West Central St Louis
County—St Louis City (Indep)
Parts:
C.T. 1051.98
C.T. 1052
C.T. 1121
C.T. 1124
C.T. 1191–1193
Low Inc—Worth Co
County—Worth
Parts:
Low Income

PRIMARY MEDICAL CARE: Montana
County Listing

County Name

*Big Horn
*Blaine
Service Area: Havre/Chinook
*Broadwater
*Carbon
Service Area: Bridger
*Carter
Service Area: Fallon
*Chouteau
Service Area: Big Sandy
Service Area: Fort Benton
*Custer
Service Area: Fallon
*Daniels
*Dawson
*Fallon
Service Area: Fallon
*Gallatin
Service Area: Ennis/W. Yellowstone
Service Area: Three Forks/Manhattan
*Garfield
*Glacier
*Golden Valley
*Granite
*Hill
Service Area: Havre/Chinook
*Jefferson
*Judith Basin
*Lewis And Clark
Service Area: Choteau
Service Area: Lincoln
*Lincoln
Service Area: Eureka
Population Group: Low Inc—Libby/Troy
*Madison
Service Area: Ennis/W. Yellowstone
*McCone
*Mineral

PRIMARY MEDICAL CARE: Montana
County Listing

Service Area Name

*Missoula
Service Area: Seely Lake
*Musselshell
*Park
*Petroleum
*Phillips
*Pondera
Service Area: Conrad
*Powder River
*Powell (g)
Facility: Montana State Prs
*Prairie
*Roosevelt
Service Area: Culbertson
Service Area: Poplar/Wolf Point
*Rosebud
Service Area: Forsyth/Colstrip
*Sanders
Service Area: Hot Springs
*Sheridan
Population Group: Low Inc—Sheridan County
*Silver Bow
Population Group: Low Inc—Silver Bow Co
*Sweet Grass
*Teton
Service Area: Choteau
Service Area: Conrad
*Toole
Service Area: Sunburst
*Treasure
Service Area: Forsyth/Colstrip
*Valley
*Wibaux
Service Area: Fallon
*Yellowstone Park
Service Area: Gardiner/Yellowstone (MT/WY)

PRIMARY MEDICAL CARE: Montana
Service Area Listing

Service Area Name

Big Sandy
County—Chouteau
Parts:
Big Sandy Division
Bridger
County—Carbon
Parts:
Carbon East Division
Fromberg-Bridger Division
Joliet Division
Choteau
County—Lewis And Clark
Parts:
Augusta Division
County—Teton
Parts:
Choteau Division
Fairfield Division
Conrad
County—Pondera
County—Teton
Parts:
Dutton-Power Division
Culbertson
County—Roosevelt
Parts:
East Roosevelt Division
Ennis/W. Yellowstone
County—Gallatin
Parts:
West Yellowstone Division
County—Madison
Parts:
Harrison Division
Madison Valley Division
Virginia City Division
Eureka
County—Lincoln
Parts:
Eureka Division
Fallon
County—Carter
County—Custer
Parts:
Shirley-Ismay Division
County—Carter
County—Fallon
County—Wibaux
Forsyth/Colstrip
County—Rosebud
County—Treasure
Fort Benton
County—Chouteau
Parts:
Fort Benton Division
Geraldine Division
Gardiner/Yellowstone (MT/WY)
County—Yellowstone Park
Parts:
Yellowstone National Park Divisi
Havre/Chinook
County—Blaine
County—Hill
Hot Springs
County—Sanders
Parts:
Flathead Division
Lincoln
County—Lewis And Clark
Parts:
Lincoln Division
Poplar/Wolf Point
County—Roosevelt
Parts:
Fort Peck Reservation Division
Seely Lake
County—Missoula
Parts:
Seeley Lake-Blackfoot Valley Div
Sunburst
County—Toole
Parts:
Sunburst Division
Three Forks/Manhattan
County—Gallatin
Parts:
Manhattan Division
Three Forks Division

PRIMARY MEDICAL CARE: Montana
Population Group Listing

Population Group

Low Inc—Libby/Troy
County—Lincoln
Parts:
Libby Division
Troy Division
Low Inc—Sheridan County
County—Sheridan
Parts:
Low Income
Low Inc—Silver Bow Co
County—Silver Bow
Parts:
Low Income

PRIMARY MEDICAL CARE: Montana
Facility Listing

Facility Name

Montana State Prs
County—Powell

PRIMARY MEDICAL CARE: Nebraska
County Listing

County Name

*Arthur
*Blaine
*Box Butte
Population Group: Low Inc—Box Butte Co
Cass
*Custer
Service Area: Arnold
*Dawes
Service Area: Crawford
*Deuel
Service Area: Julesburg (CO/NE)
*Dundy
*Garden
*Harlan
*Johnson
*Kimball
Lancaster
Facility: NE St DOC Facility—Lincoln
*Lincoln
Service Area: Arnold
*Logan
Service Area: Arnold
Service Area: Stapleton No 1
*McPherson
*Nance
*Sheridan
*Sherman
*Sioux
Service Area: Crawford
*Thomas

PRIMARY MEDICAL CARE: Nebraska
Service Area Listing

Service Area Name

Arnold
County—Custer
Parts:
Arnold Township
Cliff Township
Custer Township
Delight Township
Elim Township
Grant Township
Hayes Township
Triumph Township
Wayne Township
Wood River Township
County—Lincoln
Parts:
Antelope Precinct
Garfield Precinct
County—Logan
Parts:
Gandy Precinct

PRIMARY MEDICAL CARE: Nebraska
Service Area Listing

Service Area Name

Logan Precinct
Stapleton No. 2 Precinct
Crawford
County—Dawes
Parts:
Precinct No. 7
Precinct No. 10
Precinct No. 11
Precinct No. 9
County—Sioux
Julesburg (CO/NE)
County—Deuel
Stapleton No 1
County—Logan
Parts:
Stapleton No. 1 Precinct

PRIMARY MEDICAL CARE: Nebraska
Population Group Listing

Population Group

Low Inc—Box Butte Co
County—Box Butte
Parts:
Low Income

PRIMARY MEDICAL CARE: Nebraska
Facility Listing

Facility Name

NE St DOC Facility—Lincoln
County—Lancaster

PRIMARY MEDICAL CARE: Nevada
County Listing

County Name

Carson City (Indep)
Population Group: Low Inc—E Carson City (Indep)
Population Group: Native Am-Washoe Indian Tribe (S)
Facility: Nv St Corr Fac (North)
Facility: Sierra Family Health Ctr Clinic
*Churchill
Population Group: Native Am-Fallon Res & Colony (S)
Clark
Service Area: Indian Springs
Service Area: Laughlin
Service Area: Moapa Valley
Service Area: N Central Las Vegas
Service Area: N.E. Las Vegas
Service Area: Virgin Valley
Facility: Nv St Corr Fac (South)
*Douglas
Population Group: Am Ind—Dresslerville (S)
*Elko
Service Area: Carlin
Service Area: Jackpot
Service Area: Jarbidge
Service Area: Montello
Service Area: Mountain City Division
Service Area: Wells
Service Area: West Wendover
*Esmerelda
*Eureka
*Humboldt
Population Group: Native Am-Winnemucca Colony (S)

PRIMARY MEDICAL CARE: Nevada
County Listing

County Name

Population Group: Native Am-Fort Mcdermitt Res (S)
*Lander
*Lincoln
*Lyon
*Mineral
*Nye
*Pershing
*Storey
Washoe
Service Area: Gerlach
Service Area: Wadsworth
Population Group: Low Inc—Reno/Sparks
*White Pine (g)
Facility: Nv St Corr Fac (East)

PRIMARY MEDICAL CARE: Nevada
Service Area Listing

Service Area Name

Carlin
County—Elko
Parts:
Carlin Division
Gerlach
County—Washoe
Parts:
Gerlach Division
Indian Springs
County—Clark
Parts:
C.T. 58.98
Jackpot
County—Elko
Parts:
Jackpot Division
Jarbidge
County—Elko
Parts:
Jarbidge Division
Laughlin
County—Clark
Parts:
C.T. 57
Moapa Valley
County—Clark
Parts:
C.T. 59
Montello
County—Elko
Parts:
Montello Division
Mountain City Division
County—Elko
Parts:
Mountain City Division
N Central Las Vegas
County—Clark
Parts:
C.T. 2.01
C.T. 3.01–3.02
C.T. 4
C.T. 7
C.T. 34.01
C.T. 35
C.T. 36.02
C.T. 37–38
C.T. 39.97–39.98
C.T. 40–46
N.E. Las Vegas
County—Clark
Parts:

PRIMARY MEDICAL CARE: Nevada
Service Area Listing

Service Area Name

C.T. 47.02–47.06
C.T. 48.97–48.98
Virgin Valley
County—Clark
Parts:
C.T. 56.02–56.03
Wadsworth
County—Washoe
Parts:
Pyramid Lake Division
Wells
County—Elko
Parts:
Wells Division
West Wendover
County—Elko
Parts:
West Wendover Division

PRIMARY MEDICAL CARE: Nevada
Population Group Listing

Population Group

Am Ind—Dresslerville (S)
County—Douglas
Parts:
Dresslerville Ranch
Low Inc—E Carson City (Indep)
County—Carson City (Indep)
Parts:
C.T. 1
C.T. 5–6
C.T. 9–10
Low Inc—Reno/Sparks
County—Washoe
Parts:
C.T. 18.00
C.T. 1–3
C.T. 7
C.T. 9
C.T. 10.04
C.T. 14–15
C.T. 17
C.T. 19
C.T. 21.01
C.T. 22.03–22.04
C.T. 28
C.T. 33.01
Native Am-Fallon Res & Colony (S)
County—Churchill
Parts:
Fallon Reservation
Fallon Colony
Native Am-Fort Mcdermitt Res (S)
County—Humboldt
Parts:
Fort Mcdermitt Res
Native Am-Washoe Indian Tribe (S)
County—Carson City (Indep)
Parts:
Carson Colony
Native Am-Winnemucca Colony (S)
County—Humboldt
Parts:
Winnemucca Colony

PRIMARY MEDICAL CARE: Nevada
Facility Listing

Facility Name

Nv St Corr Fac (East)
County—White Pine

PRIMARY MEDICAL CARE: Nevada
Facility Listing

Facility Name

Nv St Corr Fac (North)
County—Carson City (Indep)
Nv St Corr Fac (South)
County—Clark
Sierra Family Health Ctr Clinic
County—Carson City (Indep)

PRIMARY MEDICAL CARE: New Hampshire
County Listing

County Name

*Coos
Service Area: Upper Connecticut Valley (NH/VT)
Population Group: Low Inc—Berlin
*Grafton
Service Area: Baker River Valley
Hillsborough
Service Area: Hillsboro/Weare
Population Group: Low Inc—Central Manchester
Population Group: Low Inc—E Nashua
Merrimack
Service Area: Hillsboro/Weare
Rockingham
Service Area: Raymond
*Sullivan
Service Area: Hillsboro/Weare

PRIMARY MEDICAL CARE: New Hampshire
Service Area Listing

Service Area Name

Baker River Valley
County—Grafton
Parts:
Rumney Town
Warren Town
Wentworth Town
Hillsboro/Weare
County—Hillsborough
Parts:
Antrim Town
Deering Town
Hillsborough Town
Weare Town
Windsor Town
County—Merrimack
Parts:
Henniker Town
County—Sullivan
Parts:
Washington Town
Raymond
County—Rockingham
Parts:
Deerfield Town
Epping Town
Fremont Town
Nottingham Town
Raymond Town
Upper Connecticut Valley (NH/VT)
County—Coos
Parts:
Clarksville Town
Colebrook Town
Columbia Town
Dixville Township
Errol Town
Millsfield Township
Pittsburg Town
Stewartstown Town

PRIMARY MEDICAL CARE: New Hampshire
Service Area Listing

Service Area Name

Stratford Town
Wentworth Location

PRIMARY MEDICAL CARE: New Hampshire
Population Group Listing

Population Group

Low Inc—Berlin
County—Coos
Parts:
Berlin City
Cambridge Twp
Dummer Town
Gorham Town
Kilkenny Twp
Milan Town
Randolph Town
Shelburne Town
Stark Town
Success Twp
Low Inc—Central Manchester
County—Hillsborough
Parts:
C.T. 4–5
C.T. 13–16
C.T. 19–20
Low Inc—E Nashua
County—Hillsborough
Parts:
C.T. 105–109

PRIMARY MEDICAL CARE: New Jersey
County Listing

County Name

Atlantic
Population Group: Low Inc/MFW—Atlantic Co
Camden
Population Group: Low Inc—Camden
*Cumberland
Population Group: Low Inc/MFW—Cumberland Co
Facility: FCI Fairton
Essex
Service Area: City Of Orange
Service Area: East Orange City
Facility: St. Michaels Med Ctr Pc Clinics
Hudson
Service Area: Jersey City
Mercer
Population Group: Medicaid—Trenton City
Ocean
Population Group: Low Inc—Lakewood
Passaic
Service Area: Passaic
Salem
Population Group: Low Inc/MFW—West Salem Co
Union
Facility: INS Medical Facility—Elizabeth

PRIMARY MEDICAL CARE: New Jersey
Service Area Listing

Service Area Name

City Of Orange
County—Essex
Parts:
C.T. 181–189
East Orange City
County—Essex

PRIMARY MEDICAL CARE: New Jersey
Service Area Listing

Service Area Name

Parts:
East Orange City
Jersey City
County—Hudson
Parts:
C.T. 1–8
C.T. 9.01–9.02
C.T. 10–11
C.T. 12.01–12.02
C.T. 13–15
C.T. 16.01–16.02
C.T. 17–40
C.T. 41.01–41.02
C.T. 42–56
C.T. 58.01–58.02
C.T. 59–63
Passaic
County—Passaic
Parts:
C.T. 1752–1755
C.T. 1758–1759

PRIMARY MEDICAL CARE: New Jersey
Population Group Listing

Population Group

Low Inc—Camden 4
County—Camden
Parts:
C.T.6001–6020
Low Inc—Lakewood
County—Ocean
Parts:
Lakewood Town
Low Inc/MFW—Atlantic Co
County—Atlantic
Parts:
Low Income/MFW
Low Inc/MFW—Cumberland Co
County—Cumberland
Parts:
Low-Income/MFW
Low Inc/MFW—West Salem Co
County—Salem
Parts:
C.T. 202–206
C.T. 213–217
C.T. 219–221
Medicaid—Trenton City
County—Mercer
Parts:
C.T. 1–17
C.T. 19–24

PRIMARY MEDICAL CARE: New Jersey
Facility Listing

Facility Name

FCI Fairton 1
County—Cumberland
INS Medical Facility—Elizabeth
County—Union
St. Michaels Med Ctr Pc Clinics
County—Essex

PRIMARY MEDICAL CARE: New Mexico
County Listing

County Name

Bernalillo
Service Area: North Valley
Population Group: Low Inc/Hmlss—Albuquerque Central

PRIMARY MEDICAL CARE: New Mexico
County Listing

County Name

*Catron
*Chaves
  Population Group: Low Inc—Chaves
*Cibola
Dona Ana
  Service Area: Hatch
  Service Area: Southern Dona Ana
*Eddy
*Grant
  Service Area: Cliff/Gila
*Guadalupe
*Harding
*Hidalgo
*Lea
  Service Area: Jal/Eunice
*Lincoln
  Service Area: Carrizozo
  Service Area: Corona
*McKinley
*Mora
*Otero
  Service Area: Cloudcroft
*Quay
*Rio Arriba
  Service Area: Coyote
  Service Area: Penasco/Truchas/Embudo
  Service Area: Rio Chama
  Service Area: Tierra Amarilla
  Service Area: Western Rio Arriba
*Roosevelt
  Population Group: Low Inc—Roosevelt Co
*San Juan
  Population Group: Am In—San Juan Co
*San Miguel
  Service Area: Pecos/Villanueva
Sandoval
  Service Area: Cuba
  Service Area: Southern Sandoval
Santa Fe
  Service Area: Santa Fe/La Familia
*Sierra
*Socorro
  Service Area: Claunch
  Service Area: Magdalena
*Taos
  Service Area: Penasco/Truchas/Embudo
  Service Area: Questo/Arroyo Hondo
*Torrance
*Union
Valencia

PRIMARY MEDICAL CARE: New Mexico
Service Area Listing

Service Area Name

Carrizozo
  County—Lincoln
    Parts:
      Carrizozo Division
Claunch
  County—Socorro
    Parts:
      Claunch Division
Cliff/Gila
  County—Grant
    Parts:
      Pinos Altos Division
      Tyrone Division
Cloudcroft
  County—Otero
    Parts:
      Southeast Otero Division

PRIMARY MEDICAL CARE: New Mexico
Service Area Listing

Service Area Name

Corona
  County—Lincoln
    Parts:
      Corona Division
Coyote
  County—Rio Arriba
    Parts:
      Coyote Division
Cuba
  County—Sandoval
    Parts:
      Cuba Division
      Jemez Division
Hatch
  County—Dona Ana
    Parts:
      Hatch Division
Jal/Eunice
  County—Lea
    Parts:
      Eunice Division
      Jal Division
Magdalena
  County—Socorro
    Parts:
      Magdalena Division
North Valley
  County—Bernalillo
    Parts:
      C.T. 29
      C.T. 30.01–30.02
      C.T. 31
      C.T. 32.01–32.02
      C.T. 35.01–35.02
      C.T. 36
Pecos/Villanueva
  County—San Miguel
    Parts:
      Pecos Division
      Villanueva Division
Penasco/Truchas/Embudo
  County—Rio Arriba
    Parts:
      Chimayo Division
      Dixon Division
  County—Taos
    Parts:
      Penasco Division
      Picuris Division
Questo/Arroyo Hondo
  County—Taos
    Parts:
      Arroyo Hondo Division
      Questa Division
Rio Chama
  County—Rio Arriba
    Parts:
      Rio Chama CCD
      Rio Chama Division
Santa Fe/La Familia
  County—Santa Fe
    Parts:
      C.T. 3
      C.T. 7–9
      C.T. 10.02
      C.T. 12
      C.T. 103.04
Southern Dona Ana
  County—Dona Ana
    Parts:
      Anthony Division
      South Dona Ana Division

PRIMARY MEDICAL CARE: New Mexico
Service Area Listing

Service Area Name

Southern Sandoval
  County—Sandoval
    Parts:
      C.T. 103–104
      C.T. 105.01–105.02
Tierra Amarilla
  County—Rio Arriba
    Parts:
      Tierra Amarilla Division
      Vallecitas Division
Western Rio Arriba
  County—Rio Arriba
    Parts:
      Jicarilla Division
      Western Rio Arriba Division

PRIMARY MEDICAL CARE: New Mexico
Population Group Listing

Population Group

Am In—San Juan Co
  County—San Juan
    Parts:
      American Indian
Low Inc—Chaves
  County—Chaves
    Parts:
      Low Income
Low Inc—Roosevelt Co
  County—Roosevelt
    Parts:
      Low Income
Low Inc/Hmlss—Albuquerque Central
  County—Bernalillo
    Parts:
      C.T. 14–15
      C.T. 20–21
      C.T. 25–28

PRIMARY MEDICAL CARE: New York
County Listing

County Name

Albany
  Service Area: Westerlo-Rensselaerville
*Allegany
  Service Area: Arcade
  Service Area: Letchworth
  Service Area: Wellsville
Bronx
  Service Area: Hunts Point
  Service Area: Morris Heights
  Population Group: Low Inc—Mott Haven
  Population Group: Low Inc—High Bridge
  Population Group: Low Inc—Morrisania
  Population Group: Low Inc—Soundview
  Population Group: Low Inc—West Farms
  Facility: Jacobi Women's Health Center
  Facility: NYC Corr. Fac./Rikers Island
Broome
  Service Area: Deposit
*Cattaraugus
  Service Area: Arcade
  Service Area: Randolph/Ellicottville
  Service Area: Tri-County
Cayuga
  Service Area: Aurora
  Service Area: Cato
  Population Group: Low Inc—Groton/Moravia
  Population Group: Low Inc—Oswego City
Chautauqua

PRIMARY MEDICAL CARE: New York
County Listing

County Name

Service Area: Dunkirk-Fredonia
Service Area: Tri-County
Service Area: Union City/Corry
Service Area: Westfield
*Clinton
Service Area: Dannemora
Population Group: Low Inc—Malone
*Cortland
Population Group: Low Inc—Cortland
*Delaware
Service Area: Deposit
Service Area: Margaretville/Andes
Population Group: Low Inc—Hobart/Stamford
Dutchess
Population Group: Low Inc—Beacon
Erie
Service Area: Black Rock/Riverside
Service Area: Ellicott/Lower Westside
Service Area: P.S. 84
Service Area: Tri-County
Facility: INS Med Facility-Batavia
*Essex
Service Area: Central Adirondack
Service Area: East Central Essex
Service Area: Warrensburg
Population Group: Low Inc—Schroon-Ticonderoga
*Franklin
Population Group: Low Inc—Canton/Potsdam
Population Group: Low Inc—Malone
Facility: Bare Hill Corr Fac
Facility: Chateaugay State Corr. Facility
Facility: FCI Raybrook
*Fulton
Facility: Hale Creek ASATCA
*Genesee
Service Area: Batavia/Attica/Bennington
*Greene
*Hamilton
Service Area: Central Adirondack
Service Area: Webb
Herkimer
Service Area: Webb
*Jefferson
Service Area: Alexandria Bay
Service Area: Gouverneur
Population Group: Low Inc—Watertown
Kings
Service Area: Bedford-Stuyvesant
Service Area: Bushwick
Service Area: Coney Island
Service Area: Crown Heights—Brooklyn
Service Area: East NY-Brooklyn
Service Area: Williamsburg
*Lewis
Service Area: Boonville
Livingston
Service Area: Letchworth
Monroe
Service Area: Jordan
Service Area: Westside (Rochester)
New York
Service Area: Alphabet City—Lower East Side
Service Area: Clinton
Service Area: Washington Heights—Inwood
Service Area: West Central Harlem
Population Group: Homeless—Chelsea/Ward's Island

PRIMARY MEDICAL CARE: New York
County Listing

County Name

Population Group: Low Inc—East Harlem
Facility: INS Medical Facility—New York
Niagara
Service Area: Newfane
Service Area: Niagara Falls
Oneida
Service Area: Boonville
Population Group: Low Inc —Utica
Population Group: Low Income—Rome PCSa
Onondaga
Population Group: Low Inc—Syracuse
Orange
Population Group: Low Inc—Middletown
Population Group: Low Inc—Newburgh City
Population Group: MFW—Goshen/Warwick
Population Group: MFW—Walden
Orleans
Service Area: Oak Orchard
Oswego
Service Area: Pulaski
Population Group: Low Inc—Fulton
Population Group: Low Inc—Oswego City
Queens
Service Area: Long Island City
Population Group: Medicaid—Rockaway
Facility: INS Med Facility Queens
Rockland
Population Group: Low Inc—Monsey/New Square
Schoharie
Population Group: Low Inc—Hobart/Stamford
*Seneca
Service Area: South Seneca
*St Lawrence
Service Area: Alexandria Bay
Service Area: Gouverneur
Service Area: Star Lake
Population Group: Low Inc—Canton/Potsdam
Population Group: Low Inc—Ogdensburg
*Steuben
Service Area: Elkland (NY/PA)
*Sullivan
Service Area: Cochecton
*Tompkins
Population Group: Low Inc—Groton/Moravia
*Ulster
Population Group: MFW—New Paltz
Facility: Highland Residential Center
Warren
Service Area: Warrensburg
Population Group: Low Inc—Schroon-Ticonderoga
Washington
Population Group: Low Inc—Schroon-Ticonderoga
*Wyoming
Service Area: Arcade
Service Area: Batavia/Attica/Bennington
Service Area: Letchworth
Facility: Attica Corr Fac

PRIMARY MEDICAL CARE: New York
Service Area Listing

Service Area Name

Alexandria Bay
County—Jefferson

PRIMARY MEDICAL CARE: New York
Service Area Listing

Service Area Name

Parts:
Alexandria Town
Cape Vincent Town
Clayton Town
Lyme Town
Orleans Town
Philadelphia Town
Theresa Town
County—St Lawrence
Parts:
Hammond Town
Alphabet City—Lower East Side
County—New York
Parts:
C.T. 2.01–2.02
C.T. 6
C.T. 8
C.T. 10.01–10.02
C.T. 12
C.T. 14.01–14.02
C.T. 16
C.T. 18
C.T. 20
C.T. 22.01–22.02
C.T. 24–25
C.T. 26.01–26.02
C.T. 27–29
C.T. 30.01–30.02
C.T. 31–32
C.T. 34
C.T. 36.01–36.02
C.T. 38
C.T. 40–43
C.T. 45
C.T. 55.02
C.T. 57
Arcade
County—Allegany
Parts:
Centerville Town
Rushford Town
County—Cattaraugus
Parts:
Farmersville Town
Freedom Town
Machias Town
Yorkshire Town
County—Wyoming
Parts:
Arcade Town
Eagle Town
Java Town
Orangeville Town
Sheldon Town
Wethersfield Town
Aurora
County—Cayuga
Parts:
Genoa Town
Ledyard Town
Scipio Town
Springport Town
Venice Town
Batavia/Attica/Bennington
County—Genesee
County—Wyoming
Parts:
Attica Town
Bennington Town
Bedford-Stuyvesant
County—Kings
Parts:

PRIMARY MEDICAL CARE: New York
Service Area Listing

Service Area Name

C.T. 11
C.T. 23
C.T. 25
C.T. 27
C.T. 29.01–29.02
C.T. 31
C.T. 33
C.T. 35
C.T. 179
C.T. 181
C.T. 183
C.T. 185.01–185.02
C.T. 187
C.T. 189
C.T. 191
C.T. 193
C.T. 195
C.T. 197
C.T. 199
C.T. 201
C.T. 203
C.T. 205
C.T. 207
C.T. 213
C.T. 215
C.T. 217
C.T. 219
C.T. 221
C.T. 223
C.T. 225
C.T. 227
C.T. 229
C.T. 231
C.T. 233
C.T. 235
C.T. 237
C.T. 239
C.T. 241
C.T. 243
C.T. 245
C.T. 247
C.T. 249
C.T. 251
C.T. 253
C.T. 255
C.T. 257
C.T. 259.01–259.02
C.T. 261
C.T. 263
C.T. 265
C.T. 267
C.T. 269
C.T. 271.01–271.02
C.T. 273
C.T. 275
C.T. 277
C.T. 279
C.T. 281
C.T. 283
C.T. 285.01–285.02
C.T. 287
C.T. 289
C.T. 291
C.T. 293
C.T. 295
C.T. 297
C.T. 299
C.T. 301
C.T. 303
C.T. 307
C.T. 309
C.T. 311

PRIMARY MEDICAL CARE: New York
Service Area Listing

Service Area Name

C.T. 313
C.T. 315
C.T. 317.01–317.02
C.T. 319
C.T. 321
C.T. 323
C.T. 325
C.T. 327
C.T. 329
C.T. 331
C.T. 333
C.T. 335
C.T. 337
C.T. 339
C.T. 341
C.T. 343
C.T. 345
C.T. 347
C.T. 349
C.T. 351
C.T. 353
C.T. 365.01–365.02
C.T. 367
C.T. 369
C.T. 371
C.T. 373
C.T. 375
C.T. 377
C.T. 379
C.T. 381
C.T. 383
C.T. 385
C.T. 387

Black Rock/Riverside
County—Erie
Parts:
C.T. 55–59

Boonville
County—Lewis
Parts:
Greig Town
Lewis Town
Leyden Town
Lyonsdale Town
Turin Town
West Turin Town
County—Oneida
Parts:
Ava Town
Boonville Town
Forestport Town

Bushwick
County—Kings
Parts:
C.T. 389
C.T. 391
C.T. 393
C.T. 395
C.T. 397
C.T. 399
C.T. 401
C.T. 403
C.T. 405
C.T. 407
C.T. 409
C.T. 411
C.T. 413
C.T. 415
C.T. 417
C.T. 419
C.T. 421
C.T. 423

PRIMARY MEDICAL CARE: New York
Service Area Listing

Service Area Name

C.T. 425
C.T. 427
C.T. 429
C.T. 431
C.T. 433
C.T. 435
C.T. 437
C.T. 439
C.T. 441
C.T. 443
C.T. 445
C.T. 447
C.T. 453
C.T. 455.97–455.98
C.T. 465
C.T. 473
C.T. 477
C.T. 481
C.T. 483
C.T. 487
C.T. 489
C.T. 491
C.T. 493
C.T. 495
C.T. 497
C.T. 501
C.T. 503
C.T. 505
C.T. 511
C.T. 513
C.T. 527
C.T. 1142.01–1142.02

Cato
County—Cayuga
Parts:
Cato Town
Conquest Town
Ira Town
Victory Town

Central Adirondack
County—Essex
Parts:
Newcomb Town
County—Hamilton
Parts:
Indian Lake Town
Long Lake Town

Clinton
County—New York
Parts:
C.T. 95
C.T. 97
C.T. 99
C.T. 101
C.T. 103
C.T. 109
C.T. 111
C.T. 113
C.T. 115
C.T. 117
C.T. 119
C.T. 121
C.T. 125
C.T. 127
C.T. 129
C.T. 133
C.T. 135

Cochecton
County—Sullivan
Parts:
Callicoon Town
Cochecton Town

PRIMARY MEDICAL CARE: New York
Service Area Listing

Service Area Name

Delaware Town
Fremont Town
Highland Town
Tusten Town
Coney Island
County—Kings
Parts:
C.T. 326
C.T. 328
C.T. 330
C.T. 340
C.T. 342
C.T. 348.01
C.T. 352
Crown Heights—Brooklyn
County—Kings
Parts:
C.T. 508
C.T. 794
C.T. 796
C.T. 798
C.T. 800
C.T. 802
C.T. 804
C.T. 806
C.T. 810
C.T. 812
C.T. 814
C.T. 816
C.T. 818
C.T. 820
C.T. 822
C.T. 824
C.T. 856
C.T. 864
C.T. 866
C.T. 868
C.T. 870
C.T. 872
C.T. 874.01–874.02
C.T. 876
C.T. 878
C.T. 880
C.T. 882
C.T. 884
C.T. 886
C.T. 888
C.T. 890
C.T. 892
C.T. 894
C.T. 896
C.T. 898
C.T. 900
C.T. 902
Dannemora
County—Clinton
Parts:
Dannemora Town
Saranac Town
Deposit
County—Broome
Parts:
Colesville Town
Sanford Town
Windsor Town
County—Delaware
Parts:
Deposit Town
Tompkins Town
Dunkirk-Fredonia
County—Chautauqua
Parts:

PRIMARY MEDICAL CARE: New York
Service Area Listing

Service Area Name

Arkwright Town
Charlotte Town
Dunkirk City
Dunkirk Town
Pomfret Town
Portland Town
Sheridan Town
Stockton Town
East Central Essex
County—Essex
Parts:
Elizabethtown Town
Essex Town
Keene Town
Lewis Town
Moriah Town
North Hudson Town
Westport Town
Willsboro Town
East Ny-Brooklyn
County—Kings
Parts:
C.T. 904
C.T. 906
C.T. 908
C.T. 910
C.T. 912
C.T. 914
C.T. 916
C.T. 918
C.T. 920
C.T. 922
C.T. 982
C.T. 1058
C.T. 1070
C.T. 1078
C.T. 1098
C.T. 1100
C.T. 1102
C.T. 1106
C.T. 1110
C.T. 1112
C.T. 1114
C.T. 1118
C.T. 1120
C.T. 1122
C.T. 1124
C.T. 1126
C.T. 1128
C.T. 1130
C.T. 1132
C.T. 1134
C.T. 1136
C.T. 1138
C.T. 1140
C.T. 1146
C.T. 1148
C.T. 1150
C.T. 1152
C.T. 1154
C.T. 1156
C.T. 1158
C.T. 1160
C.T. 1162
C.T. 1164
C.T. 1166
C.T. 1168
C.T. 1170
C.T. 1172.01–1172.02
C.T. 1174
C.T. 1176.01–1176.02
C.T. 1178

PRIMARY MEDICAL CARE: New York
Service Area Listing

Service Area Name

C.T. 1180
C.T. 1182.01–1182.02
C.T. 1184
C.T. 1186
C.T. 1188
C.T. 1190.97
C.T. 1192
C.T. 1194
C.T. 1196
C.T. 1200
C.T. 1202.97–1202.98
C.T. 1208
C.T. 1210
C.T. 1214
C.T. 1220
Elkland (NY/PA)
County—Steuben
Parts:
Tuscarora Town
Woodhull Town
Ellicott/Lower Westside
County—Erie
Parts:
C.T. 12
C.T. 13.01–13.02
C.T. 14.01–14.02
C.T. 15–18
C.T. 25.01–25.02
C.T. 26
C.T. 27.01
C.T. 31
C.T. 68
C.T. 71.01–71.02
C.T. 72.01
Gouverneur
County—Jefferson
Parts:
Antwerp Town
County—St Lawrence
Parts:
De Kalb Town
De Peyster Town
Edwards Town
Fowler Town
Gouverneur Town
Macomb Town
Rossie Town
Hunts Point
County—Bronx
Parts:
C.T. 5
C.T. 91
C.T. 97
C.T. 99
C.T. 105
C.T. 115.01–115.02
Jordan
County—Monroe
Parts:
C.T. 7
C.T. 13–15
C.T. 39
C.T. 43
C.T. 48–53
C.T. 55–56
C.T. 80
C.T. 91–92
C.T. 93.01
Letchworth
County—Allegany
Parts:
Allen Town

PRIMARY MEDICAL CARE: New York
Service Area Listing

Service Area Name

Caneadea Town
Granger Town
Hume Town
County—Livingston
Parts:
Portage Town
County—Wyoming
Parts:
Castile Town
Gainesville Town
Genesee Falls Town
Pike Town
Long Island City
County—Queens
Parts:
C.T. 1
C.T. 7
C.T. 19
C.T. 25
C.T. 27
C.T. 29
C.T. 31
C.T. 35
C.T. 37
C.T. 39
C.T. 41
C.T. 43
C.T. 45
C.T. 47
C.T. 49
C.T. 51
C.T. 53
C.T. 55
C.T. 57
C.T. 59
C.T. 171
Margaretville/Andes
County—Delaware
Parts:
Andes Town
Middletown Town
Roxbury Town
Morris Heights
County—Bronx
Parts:
C.T. 53.02
C.T. 205
C.T. 215.01–215.02
C.T. 217.01
C.T. 227.01
C.T. 233.01
C.T. 235.01
C.T. 237.01
C.T. 239
C.T. 241
C.T. 243
C.T. 245
C.T. 247
C.T. 249
C.T. 251
C.T. 253
C.T. 255
C.T. 257
Newfane
County—Niagara
Parts:
Hartland Town
Newfane Town
Somerset Town
Wilson Town
Niagara Falls
County—Niagara
Parts:
Niagara Falls City
Oak Orchard
County—Orleans
Parts:
Albion Town
Barre Town
Carlton Town
Clarendon Town
Gaines Town
Kendall Town
Murray Town
P.S. 84
County—Erie
Parts:
C.T. 27.02
C.T. 29
C.T. 32.01–32.02
C.T. 33.01–33.02
C.T. 34–36
C.T. 39.01–39.02
C.T. 40.01–40.02
C.T. 41–42
C.T. 44.02
C.T. 52.02
C.T. 64
Pulaski
County—Oswego
Parts:
Albion Town
Boylston Town
Mexico Town
Orwell Town
Redfield Town
Richland Town
Sandy Creek Town
Williamstown Town
Randolph/Ellicottville
County—Cattaraugus
Parts:
Carrollton Town
Coldspring Town
Conewango Town
Ellicottville Town
Franklinville Town
Great Valley Town
Humphrey Town
Little Valley Town
Mansfield Town
Napoli Town
New Albion Town
Randolph Town
Red House Town
Salamanca City
Salamanca Town
South Valley Town
South Seneca
County—Seneca
Parts:
Covert Town
Lodi Town
Ovid Town
Star Lake
County—St Lawrence
Parts:
Clare Town
Clifton Town
Fine Town
Pitcairn Town
Russell Town
Tri-County
County—Cattaraugus
Parts:
Dayton Town
Leon Town
Otto Town
Perrysburg Town
Persia Town
County—Chautauqua
Parts:
Cherry Creek Town
Hanover Town
Villenova Town
County—Erie
Parts:
Brant Town
Collins Town
Eden Town
Evans Town
North Collins Town
Union City/Corry
County—Chautauqua
Parts:
Clymer Town
French Creek Town
Warrensburg
County—Essex
Parts:
Minerva Town
County—Warren
Parts:
Chester Town
Horicon Town
Johnsburg Town
Thurman Town
Warrensburg Town
Washington Heights—Inwood
County—New York
Parts:
C.T. 243.01
C.T. 245
C.T. 247
C.T. 249
C.T. 251
C.T. 253
C.T. 255
C.T. 261
C.T. 263
C.T. 265
C.T. 267
C.T. 269
C.T. 271
C.T. 273
C.T. 275
C.T. 277
C.T. 279
C.T. 281
C.T. 283
C.T. 285
C.T. 287
C.T. 289
C.T. 291
C.T. 293
C.T. 295
C.T. 297
C.T. 303
C.T. 307
C.T. 309
C.T. 311
Webb
County—Hamilton
Parts:
Inlet Town
County—Herkimer

PRIMARY MEDICAL CARE: New York
Service Area Listing

Service Area Name

Parts:
Webb Town
Wellsville
County—Allegany
Parts:
Alfred Town
Alma Town
Almond Town
Amity Town
Andover Town
Angelica Town
Belfast Town
Birdsall Town
Bolivar Town
Burns Town
Clarksville Town
Cuba Town
Friendship Town
Genesee Town
Grove Town
Independence Town
New Hudson Town
Scio Town
Ward Town
Wellsville Town
West Almond Town
Willing Town
Wirt Town
West Central Harlem
County—New York
Parts:
C.T. 186
C.T. 190
C.T. 197.02
C.T. 200
C.T. 201.02
C.T. 207.02
C.T. 208
C.T. 209.01–209.02
C.T. 211–212
C.T. 213.01–213.02
C.T. 214
C.T. 216
C.T. 217.01–217.02
C.T. 218
C.T. 219.97
C.T. 220
C.T. 221.01–221.02
C.T. 222
C.T. 223.97–223.98
C.T. 224–226
C.T. 227.01–227.02
C.T. 228–230
C.T. 231.01–231.02
C.T. 232–234
C.T. 235.01–235.02
C.T. 236–237
C.T. 239
C.T. 241
C.T. 243.02
Westerlo-Rensselaerville
County—Albany
Parts:
Rensselaerville Town
Westerlo Town
Westfield
County—Chautauqua
Parts:
Chautauqua Town
Mina Town
Ripley Town
Sherman Town

PRIMARY MEDICAL CARE: New York
Service Area Listing

Service Area Name

Westfield Town
Westside (Rochester)
County—Monroe
Parts:
C.T. 2
C.T. 16–17
C.T. 23–24
C.T. 27
C.T. 32
C.T. 40–41
C.T. 62–71
C.T. 75
C.T. 87.01–87.02
C.T. 88–90
C.T. 93.02
C.T. 94.01–94.03
C.T. 95
C.T. 96.01–96.04
Williamsburg
County—Kings
Parts:
C.T. 507
C.T. 509
C.T. 515
C.T. 519
C.T. 523
C.T. 525
C.T. 529
C.T. 531
C.T. 533
C.T. 535
C.T. 537
C.T. 539
C.T. 545
C.T. 547
C.T. 549
C.T. 551
C.T. 553
C.T. 555

PRIMARY MEDICAL CARE: New York
Population Group Listing

Population Group

Homeless—Chelsea/Ward's Island
County—New York
Parts:
C.T. 91 (Homeless)
C.T. 93 (Homeless)
C.T. 95 (Homeless)
C.T. 97 (Homeless)
C.T. 99 (Homeless)
C.T. 101 (Homeless)
C.T. 103 (Homeless)
C.T. 109 (Homeless)
C.T. 111 (Homeless)
C.T. 113 (Homeless)
C.T. 115 (Homeless)
C.T. 117 (Homeless)
C.T. 240 (Homeless)
Low Inc —Utica
County—Oneida
Parts:
C.T. 202.01–202.02
C.T. 203–206
C.T. 207.01–207.02
C.T. 208.01–208.03
C.T. 209–210
C.T. 211.01–211.03
C.T. 212.01–212.02
C.T. 213.01–213.03
C.T. 214.01–214.04

PRIMARY MEDICAL CARE: New York
Population Group Listing

Population Group

C.T. 215
C.T. 216.01–216.02
C.T. 217.01–217.02
Low Inc—Beacon
County—Dutchess
Parts:
C.T. 2101–2103
Low Inc—Canton/Potsdam
County—Franklin
Parts:
Dickinson Town
Waverly Town
County—St Lawrence
Parts:
Canton Town
Colton Town
Hermon Town
Hopkinton Town
Madrid Town
Parishville Town
Pierrepont Town
Potsdam Town
Stockholm Town
Low Inc—Cortland
County—Cortland
Parts:
Low Income
Low Inc—East Harlem
County—New York
Parts:
C.T. 156.01–156.02
C.T. 158.02
C.T. 160.02
C.T. 162
C.T. 164
C.T. 166
C.T. 168
C.T. 170
C.T. 172.01–172.02
C.T. 174.01–174.02
C.T. 178
C.T. 180
C.T. 182
C.T. 184
C.T. 188
C.T. 192
C.T. 194
C.T. 196
C.T. 198
C.T. 202
C.T. 204
C.T. 206
C.T. 210
Low Inc—Fulton
County—Oswego
Parts:
Fulton City
Granby Town
Schroeppel Town
Volney Town
Low Inc—Groton/Moravia
County—Cayuga
Parts:
Locke Twn
Moravia Twn
Semproniustwn
Summerhilltwn
County—Tompkins
Parts:
Groton Twn
Low Inc—High Bridge
County—Bronx

PRIMARY MEDICAL CARE: New York
Population Group Listing

Population Group

Parts:
C.T. 53.01
C.T. 57
C.T. 59.01
C.T. 187
C.T. 189
C.T. 193
C.T. 195
C.T. 197
C.T. 199
C.T. 201
C.T. 211
C.T. 213.01–213.02
C.T. 217.02
C.T. 219
C.T. 221
C.T. 223
C.T. 227.02
Low Inc—Hobart/Stamford
County—Delaware
Parts:
Davenport Town
Harpersfield Town
Kortright Town
Stamford Town
County—Schoharie
Parts:
Jefferson Town
Low Inc—Malone
County—Clinton
Parts:
Altona Town
Clinton Town
Ellenburgtown
County—Franklin
Parts:
Bangor Town
Bellmont Town
Bombaytown
Brandon Town
Burke Town
Chateaugay Town
Constable Town
Duane Own
Fort Covington Own
Malone Town
Moira Town
Westville Town
Low Inc—Middletown
County—Orange
Parts:
Middletown Township
Low Inc—Monsey/New Square
County—Rockland
Parts:
C.T. 115.03–115.04
C.T. 121–124
Low Inc—Morrisania
County—Bronx
Parts:
C.T. 49
C.T. 59.02
C.T. 61
C.T. 121.01
C.T. 123
C.T. 125
C.T. 127.01
C.T. 129.01
C.T. 131
C.T. 133
C.T. 135
C.T. 137

PRIMARY MEDICAL CARE: New York
Population Group Listing

Population Group

C.T. 139
C.T. 141
C.T. 143
C.T. 145
C.T. 147
C.T. 149
C.T. 151
C.T. 153
C.T. 155
C.T. 157
C.T. 161
C.T. 163
C.T. 165
C.T. 167
C.T. 169
C.T. 171
C.T. 173
C.T. 175
C.T. 177
C.T. 179
C.T. 181
C.T. 183
C.T. 225
C.T. 227.03
C.T. 229.02
C.T. 367
C.T. 369.02
Low Inc—Mott Haven
County—Bronx
Parts:
C.T. 11
C.T. 15
C.T. 17
C.T. 23
C.T. 25
C.T. 27.01–27.02
C.T. 31
C.T. 33
C.T. 35
C.T. 37
C.T. 39
C.T. 41
C.T. 43
C.T. 47
C.T. 65
C.T. 67
C.T. 69
C.T. 71
C.T. 73
C.T. 75
C.T. 77
C.T. 79
C.T. 81
C.T. 83
C.T. 85
C.T. 87
C.T. 89
C.T. 119
C.T. 121.02
C.T. 127.02
C.T. 129.02
Low Inc—Newburgh City
County—Orange
Parts:
C.T. 1–6
Low Inc—Ogdensburg
County—St Lawrence
Parts:
Depeyster Town
Lisbon Town
Morristown Town
Ogdensburg City

PRIMARY MEDICAL CARE: New York
Population Group Listing

Population Group

Oswegatchie Town
Waddington Town
Low Inc—Oswego City
County—Cayuga
Parts:
Sterling Town
County—Oswego
Parts:
Hannibal Town
Minetto Town
New Haven Town
Oswego City
Oswego Town
Scriba Town
Low Inc—Schroon-Ticonderoga
County—Essex
Parts:
Crown Point Twp
Schroon Twp
Ticonderoga Twp
County—Warren
Parts:
Hague Twp
County—Washington
Parts:
Dresden Twp
Putnam
Low Inc—Soundview
County—Bronx
Parts:
C.T. 2
C.T. 4
C.T. 16
C.T. 20
C.T. 24
C.T. 28
C.T. 36
C.T. 38
C.T. 40.01–40.02
C.T. 44
C.T. 46
C.T. 48
C.T. 50
C.T. 52
C.T. 54
C.T. 56
C.T. 58
C.T. 62
C.T. 64
C.T. 66
C.T. 68
C.T. 70
C.T. 72
C.T. 74
C.T. 78
C.T. 84
C.T. 86
C.T. 88
C.T. 98
C.T. 102
C.T. 114
Low Inc—Syracuse
County—Onondaga
Parts:
C.T. 5–7
C.T. 13–16
C.T. 21–24
C.T. 29–35
C.T. 36.01
C.T. 38–45
C.T. 51–55
C.T. 57–59

PRIMARY MEDICAL CARE: New York
Population Group Listing

Population Group

C.T. 61.01–61.02
Low Inc—Watertown
County—Jefferson
Parts:
Brownville Town
City Of Watertown
Hounsfield Town
Le Ray Town
Pamelia Town
Rutland Town
Watertown Town
Low Inc—West Farms
County—Bronx
Parts:
C.T. 60
C.T. 216.01–216.02
C.T. 218
C.T. 220
C.T. 236
C.T. 240
C.T. 359
C.T. 361
C.T. 363
Low Income—Rome PCSa
County—Oneida
Parts:
Floyd
Lee
Rome
Verona
Western
Medicaid—Rockaway
County—Queens
Parts:
C.T. 916.01–916.02
C.T. 916.99
C.T. 918
C.T. 922
C.T. 928
C.T. 934
C.T. 938
C.T. 942.01–942.03
C.T. 952
C.T. 962
C.T. 964
C.T. 972
C.T. 992
C.T. 998
C.T. 1008
C.T. 1010
C.T. 1032
MFW—Goshen/Warwick
County—Orange
Parts:
Goshen Town
Warwick Town
MFW—New Paltz
County—Ulster
Parts:
New Paltz Town
MFW—Walden
County—Orange
Parts:
Montgomery Town

PRIMARY MEDICAL CARE: New York
Facility Listing

Facility Name

Attica Corr Fac
County—Wyoming
Bare Hill Corr Fac
County—Franklin
Chateaugay State Corr. Facility
County—Franklin
FCI Raybrook
County—Franklin
Hale Creek ASATCA
County—Fulton
Highland Residential Center
County—Ulster
INS Med Facility Queens
County—Queens
INS Med Facility-Batavia
County—Erie
INS Medical Facility—New York
County—New York
Jacobi Women's Health Center
County—Bronx
NYC Corr. Fac./Rikers Island
County—Bronx

PRIMARY MEDICAL CARE: North Carolina
County Listing

County Name

Alamance
Population Group: Low Inc—Alamance Co
Alexander
*Anson
*Beaufort
Service Area: Bayboro/Aurora
Service Area: Belhaven/Swan Quarter
*Bertie
Brunswick
Population Group: Low Inc—Brunswick Co.
Caldwell
Service Area: Western Caldwell
*Caswell
Chatham
Population Group: Low Inc—Moncure/Sanford
*Cherokee
Service Area: Andrews
*Clay
*Cleveland
Population Group: Low Inc—Cleveland Co
*Columbus
Cumberland
Population Group: Low Inc—Cumberland Co
Currituck
*Dare
Service Area: Hatteras-Ocracoke
*Duplin
Population Group: Low Inc—Duplin Co
Edgecombe
Franklin
Gaston
Population Group: Low Inc—Gaston Co
*Gates
*Graham
*Greene
Guilford
Service Area: Inner City Greensboro
*Halifax
Population Group: Low Inc—Halifax
*Harnett
Population Group: Low Inc—Harnett
*Henderson
Population Group: MFW—Henderson/Polk
*Hertford
Population Group: Low Inc—Hertford Co
*Hoke
*Hyde
Service Area: Belhaven/Swan Quarter
Service Area: Hatteras-Ocracoke
Johnston
Population Group: Low Inc/MFW—Johnston Co
*Lee
Population Group: Low Inc—Moncure/Sanford
*Lenoir
Service Area: East Kinston
Mecklenburg
Service Area: Central Charlotte
Facility: C.W. Williams Med Ofc
Nash
Population Group: Low Inc/MFW—Nash Co
New Hanover
Population Group: Low Inc—New Hanover Co
*Northampton
*Pamlico
Service Area: Bayboro/Aurora
*Pender
*Person
*Polk
Population Group: MFW—Henderson/Polk
Randolph
*Robeson
*Sampson
Population Group: Low Inc/MFW—Sampson Co
*Scotland
Population Group: Low Inc—Scotland Co
*Stanly
Population Group: Low Inc—Stanly Co
Stokes
Service Area: Danbury
*Surry
Population Group: Low Inc—Surry Co
*Swain
Population Group: Low Inc—Swain Co
*Tyrrell
*Vance
Facility: FCI—Butner
Wake
Facility: Central Prison
*Warren
*Washington
Wayne
Population Group: Low Inc—Wayne Co
*Wilson
Population Group: Low Inc/MFW—Wilson Co
*Yancey
Population Group: Low Inc—Yancey Co

PRIMARY MEDICAL CARE: North Carolina
Service Area Listing

Service Area Name

Andrews
County—Cherokee
Parts:
Valley Town Township
Bayboro/Aurora
County—Beaufort
Parts:
Richland Township
County—Pamlico
Belhaven/Swan Quarter
County—Beaufort

PRIMARY MEDICAL CARE: North Carolina
Service Area Listing

Service Area Name

Parts:
Bath Township
Pantego Township
County—Hyde
Parts:
Currituck Township
Fairfield Township
Lake Landing Township
Lake Mattamuskeet Unorg.
Swan Quarter Township
Central Charlotte
County—Mecklenburg
Parts:
C.T. 1
C.T. 4–8
C.T. 36–37
C.T. 38.98
C.T. 39.01–39.02
C.T. 41–42
C.T. 45.00–51.01
C.T. 52
Danbury
County—Stokes
Parts:
C.T. 701–703
East Kinston
County—Lenoir
Parts:
C.T. 101–105
C.T. 107
Hatteras-Ocracoke
County—Dare
Parts:
Hatteras Township
Kinnakeet Township
County—Hyde
Parts:
Ocracoke Township
Inner City Greensboro
County—Guilford
Parts:
C.T. 101
C.T. 107.02
C.T. 108.01
C.T. 110
C.T. 111.01
C.T. 112–115
Western Caldwell
County—Caldwell
Parts:
Globe Township
Johns River Township
Mulberry Township
Patterson Township
Wilson Creek Township

PRIMARY MEDICAL CARE: North Carolina
Population Group Listing

Population Group

Low Inc—Alamance Co
County—Alamance
Parts:
Low Income
Low Inc—Brunswick Co.
County—Brunswick
Parts:
Low Income
Low Inc—Cleveland Co
County—Cleveland
Parts:
Low Income

PRIMARY MEDICAL CARE: North Carolina
Population Group Listing

Population Group

Low Inc—Cumberland Co
County—Cumberland
Parts:
Low Income
Low Inc—Duplin Co
County—Duplin
Parts:
Low Income
Low Inc—Gaston Co
County—Gaston
Parts:
Low Income
Low Inc—Halifax
County—Halifax
Parts:
Low Income
Low Inc—Harnett
County—Harnett
Parts:
Low Income
Low Inc—Hertford Co
County—Hertford
Parts:
Low Income
Low Inc—Moncure/Sanford
County—Chatham
Parts:
Cape Fear
Haw River
Oakland
County—Lee
Parts:
Cape Fear
Deep River
East Sanford
Jonesboro
West Sanford
Low Inc—New Hanover Co
County—New Hanover
Parts:
Low Income
Low Inc—Scotland Co
County—Scotland
Parts:
Low Income
Low Inc—Stanly Co
County—Stanly
Parts:
Low Income
Low Inc—Surry Co
County—Surry
Parts:
Low Income
Low Inc—Swain Co
County—Swain
Parts:
Low Income
Low Inc—Wayne Co
County—Wayne
Parts:
Low Income
Low Inc—Yancey Co
County—Yancey
Parts:
Low Income
Low Inc/MFW—Johnston Co
County—Johnston
Parts:
Low Income/MFW
Low Inc/MFW—Nash Co
County—Nash
Parts:

PRIMARY MEDICAL CARE: North Carolina
Population Group Listing

Population Group

Low Income/MFW
Low Inc/MFW—Sampson Co
County—Sampson
Parts:
Low Income/MFW
Low Inc/MFW—Wilson Co
County—Wilson
Parts:
Low Income/MFW
MFW—Henderson/Polk
County—Henderson
Parts:
MFW
County—Polk
Parts:
MFW

PRIMARY MEDICAL CARE: North Carolina
Facility Listing

Facility Name

C.W. Williams Med Ofc
County—Mecklenburg
Central Prison
County—Wake
FCI—Butner
County—Vance

PRIMARY MEDICAL CARE: North Dakota
County Listing

County Name

*Adams
Service Area: Lemmon (SD/ND)
*Barnes
Service Area: Wimbledon
*Benson
*Bottineau
Service Area: Bottineau
Service Area: Mohall
*Burke
*Cavalier
*Dickey
Service Area: Dickey/Brown (ND/SD)
*Divide
*Dunn
*Eddy
*Emmons
*Golden Valley
*Hettinger
*Kidder
Service Area: Medina
*La Moure
Service Area: La Moure
*Logan
*McHenry
*McIntosh
Population Group: Low Inc—McIntosh
*McKenzie
*McLean
*Mercer
Morton
Service Area: West Morton/East Stark
*Mountrail
Service Area: New Town
Service Area: Stanley
*Nelson
*Oliver
*Pembina
Population Group: Low Inc—Pembina
*Renville
Service Area: Mohall

PRIMARY MEDICAL CARE: North Dakota
County Listing

County Name

*Richland
Service Area: Hankinson/Lidgerwood (ND/SD)
*Rolette
*Sargent
*Sheridan
*Sioux
*Slope
*Stark
Service Area: West Morton/East Stark
*Stutsman
Service Area: Medina
Service Area: Wimbledon
*Ward
Service Area: New Town
Service Area: Stanley
*Wells
*Williams
Service Area: Tioga

PRIMARY MEDICAL CARE: North Dakota
Service Area Listing

Service Area Name

Bottineau
County—Bottineau
Parts:
Amity Township
Bentinck Township
Bottineau City
Brander Township
Cecil Township
Chatfield Township
Cordelia Township
Dalen Township
Eidsvold Township
Elms Township
Elysian Township
Gardena City
Haram Township
Hastings Township
Homen Township
Kane Township
Kramer City
Landa City
Lewis Township
Lordsburg Township
Maxbass City
Mount Rose Township
Newborg Township
Newburg City
Oak Creek Township
Oak Valley Township
Ostby Township
Overly City
Peabody Township
Pickering Township
Richburg Township
Roland Township
Russell City
Scandia Township
Scotia Township
Sergius Township
Souris City
Starbuck Township
Stone Creek Township
Tacoma Township
Wayne Township
Wellington Township
Westhope City
Whitby Township
Whitteron Township

PRIMARY MEDICAL CARE: North Dakota
Service Area Listing

Service Area Name

Willow City City
Willow Vale Township
Dickey/Brown (ND/SD)
County—Dickey
Hankinson/Lidgerwood (ND/SD)
County—Richland
Parts:
Barney City
Belford Township
Brandenburg Township
Brightwood Township
Danton Township
Devillo Township
Dexter Township
Duerr Township
Elma Township
Fairmount City
Fairmount Township
Grant Township
Great Bend City
Greendale Township
Hankinson City
La Mars Township
Liberty Grove Township
Lidgerwood City
Mantador City
Moran Township
Waldo Township
Wyndmere Township
Wyndmere City
La Moure
County—La Moure
Parts:
Adrian Township
Badger Township
Berlin City
Black Loam Township
Bluebird Township
Dean Township
Dickey City
Gladstone Township
Glen Township
Glenmore Township
Grand Rapids Township
Grandview Township
Greenville Township
Henrietta Township
Jud City
Kennison Township
La Moure City
Litchville Township
Marion City
Mikkelson Township
Ovid Township
Pearl Lake Township
Prairie Township
Raney Township
Roscoe Township
Russell Township
Ryan Township
Saratoga Township
Sheridan Township
Verona City
Lemmon (SD/ND)
County—Adams
Parts:
East Adams Unorg.
Gilstrap Township
North Lemmon Township
Orange Township
South Fork Township
Medina

PRIMARY MEDICAL CARE: North Dakota
Service Area Listing

Service Area Name

County—Kidder
Parts:
Allen Township
Buckeye Township
Bunker Township
Crystal Springs Township
Dawson City
Graf Township
Haynes Township
Manning Township
Peace Township
Quinby Township
Sibley Township
South Kidder Unorg.
Steele City
Tanner Township
Tappen City
Tappen Township
Valley Township
Vernon Township
Weiser Township
Westford Township
Williams Township
Woodlawn Township
County—Stutsman
Parts:
Bloomenfield Township
Chase Lake Unorg.
Chicago Township
Cleveland City
Flint Township
Germania Township
Griffin Township
Iosco Township
Medina City
Newbury Township
Peterson Township
Sinclair Township
St. Paul Township
Stirton Township
Streeter City
Streeter Township
Valley Spring Township
Weld Township
Mohall
County—Bottineau
Parts:
Antler City
Antler Township
Blaine Township
Cut Bank Township
Hoffman Township
Lansford Township
Lansford City
Renville Township
Sherman Township
Wheaton Township
County—Renville
Parts:
Brandon Township
Callahan Township
Clay Township
Colquhoun Township
Eden Valley Township
Grano City
Grassland Township
Hamerly Township
Hamlet Township
Hurley Township
Lockwood Township
Loraine City
Mohall City

PRIMARY MEDICAL CARE: North Dakota
Service Area Listing

Service Area Name

Sherwood City
New Town
Parts:
Banner Township
Big Bend Township
Brookbank Township
Crane Creek Township
Fertile Township
Howie Township
Knife River Township
Liberty Township
Model Township
Mountrail Township
New Town City
Oakland Township
Osborn Township
Osloe Township
Parshall City
Parshall Township
Plaza Township
Plaza City
Rat Lake Township
Shell Township
Sikes Township
Southwest Mountrail Unorg.
Spring Coulee Township
Van Hook Township
Wayzetta Township
County—Ward
Parts:
Anna Township
Hiddenwood Township
Linton Township
Lund Township
Makoti City
Orlien Township
Ryder Township
Ryder City
Shealey Township
Tolgen Township
Stanley
Parts:
Alger Township
Bicker Township
Burke Township
Clearwater Township
Cottonwood Township
Crowfoot Township
Debing Township
Egan Township
Idaho Township
James Hill Township
Kickapoo Township
Lostwood Township
Lowland Township
Manitou Township
McAlmond Township
McGahan Township
Myrtle Township
Palermo City
Palermo Township
Powers Township
Powers Lake Township
Purcell Township
Redmond Township
Ross City
Ross Township
Sidonia Township
Sorkness Township
Stanley City
Stave Township
West Mountrail Unorg.

PRIMARY MEDICAL CARE: North Dakota
Service Area Listing

Service Area Name

White Earth City
White Earth Township
County—Ward
Parts:
Berthold City
Berthold Township
Carbondale Township
Carpio City
Carpio Township
Donnybrook City
Evergreen Township
Mandan Township
Passport Township
Ree Township
Tioga
County—Williams
Parts:
Alamo City
Athens Township
Barr Butte Township
Big Meadow Township
Big Stone Township
Blacktail Township
Blue Ridge Township
Bonetraill Township
Brooklyn Township
Champion Township
Climax Township
Dry Fork Township
Dublin Township
Ellisville Township
Epping City
Farmvale Township
Golden Valley Township
Good Luck Township
Grenora City
Grenora Township
Hanks City
Hazel Township
Hofflund Township
Lindahl Township
Marshall Township
Nesson Valley Unorg.
New Home Township
Oliver Township
Orthell Township
Pleasant Valley Township
Rainbow Township
Ray City
Rock Island Township
Sauk Valley Township
Scorio Township
South Meadow Township
Southeast Williams Unorg.
Spring Brook City
Strandahl Township
Tioga Township
Tioga City
Truax Township
Twelve Mile Township
View Township
West Bank Township
Wheelock Township
Wheelock City
Wildrose City
Winner Township
West Morton/East Stark
County—Morton
Parts:
Almont City
Engelter Township
Glen Ullin City

PRIMARY MEDICAL CARE: North Dakota
Service Area Listing

Service Area Name

Hebron City
New Salem City
West Morton Unorg.
County—Stark
Parts:
East Stark Unorg.
Richardton City
Taylor City
Wimbledon
County—Barnes
Parts:
Ashtabula Township
Baldwin Township
Dazey City
Dazey Township
Edna Township
Ellsbury Township
Grand Prairie Township
Lake Town Township
Leal City
Minnie Lake Township
Pierce Township
Pillsbury City
Rogers City
Rogers Township
Sibley City
Sibley Trail Township
Uxbridge Township
Wimbledon City
County—Stutsman
Parts:
Ashland Township
Courtenay City
Courtenay Township
Durham Township
Gray Township
Spiritwood Lake City

PRIMARY MEDICAL CARE: North Dakota
Population Group Listing

Population Group

Low Inc—McIntosh
County—McIntosh
Parts:
Low Income
Low Inc—Pembina
County—Pembina
Parts:
Low Income

PRIMARY MEDICAL CARE: Ohio
County Listing

County Name

*Adams
Population Group: Low Inc—Adams Co
*Ashtabula
Service Area: Orwell
*Athens
Population Group: Low Inc—Athens
Butler
Service Area: Eastern Hamilton
Service Area: West Middletown
Facility: Maternal And Child Health Center
Carroll
Clark
Service Area: Southwest Side (Springfield)
Clermont
Service Area: Eastern Clermont
Columbiana
Population Group: Low Inc—East Liverpool

PRIMARY MEDICAL CARE: Ohio
County Listing

Service Area Name

*Coshocton
Population Group: Low Inc—Coshocton Co
Cuyahoga
Service Area: East Cleveland
Service Area: Hough/Norwood/Glenville
Service Area: Mt Pleasant/Union-Miles/Corlett
Service Area: Western Collinwood
Population Group: Low Inc—Lee Miles (Cleveland)
Population Group: Low Inc—Central/Fairfax/Kinsman
Population Group: Low Income—Near West/Westside/Edgewate
Facility: Free Clinic Of Greater Cleveland
Facility: Neighborhood Family Practice
*Fayette
Population Group: Low Inc—Fayette Co
Franklin
Service Area: Lower Linden (N.E. Columbus)
Service Area: Near North/University
Population Group: Low Inc—Near Southside (Columbus)
Population Group: Low Inc—Franklinton (Columbus)
*Guernsey
Service Area: Freeport
Hamilton
Service Area: East & Lower Price Hill/S Fairmont
Service Area: East End (Cincinnati)
Service Area: Millvale
Service Area: West End (Cincinnati)
*Hancock
Population Group: Low Inc—Tiffin/Fostoria
*Hardin
Population Group: Low Inc—Hardin Co
*Harrison
Service Area: Cadiz/Scio/Hopedale
Service Area: Freeport
*Highland
Population Group: Low Inc—Highland Co
*Hocking
Population Group: Low Inc—Hocking Co
*Holmes
Population Group: Low Inc—Holmes Co
*Jackson
Population Group: Low Inc—Jackson Co
Jefferson
Population Group: Low Inc—East Liverpool
Lawrence
Lucas
Service Area: East Toledo
Service Area: Near Southside Toledo
Population Group: Low Inc—Center City/Dorr (Toledo)
Mahoning
Service Area: Eastside Youngstown
Service Area: Southside Youngstown
*Meigs
Population Group: Low Inc—Meigs Co
*Monroe
Service Area: New Matamoras
Service Area: Woodsfield
Montgomery
Service Area: West Dayton
Population Group: Homeless—Dayton
*Morgan
*Morrow
Population Group: Low Inc—Morrow Co
*Noble

PRIMARY MEDICAL CARE: Ohio
County Listing

Service Area Name

Facility: Noble Corr Fac
*Paulding
*Perry
Pickaway
Population Group: Low Inc—Pickaway Co
*Pike
Population Group: Low Inc—Pike Co
*Preble
Richland
Population Group: Low Inc—Richland
*Sandusky
Population Group: Low Inc/MFW—Sandusky Co
*Scioto
Population Group: Low Inc—Scioto Co
*Seneca
Population Group: Low Inc—Tiffin/Fostoria
Stark
Service Area: NE Canton
Summit
Service Area: Akron (Southeast Side)
Trumbull
Service Area: Orwell
Service Area: The Flats (Warren)
*Tuscarawas
Service Area: Freeport
Population Group: Low Inc—S Tuscarawas Co
*Vinton
Washington
Service Area: New Matamoras
Wood
Population Group: Low Inc—Tiffin/Fostoria

PRIMARY MEDICAL CARE: Ohio
Service Area Listing

Service Area Name

Akron (Southeast Side)
County—Summit
Parts:
C.T. 5014
C.T. 5031–5035
C.T. 5038
Cadiz/Scio/Hopedale
County—Harrison
Parts:
Archer Township
Athens Township
Cadiz Township
Franklin Township
German Township
Green Township
Monroe Township
North Township
Rumley Township
Short Creek Township
Stock Township
East & Lower Price Hill/S Fairmont
County—Hamilton
Parts:
C.T. 87
C.T. 89
C.T. 91–96
C.T. 103
East Cleveland
County—Cuyahoga
Parts:
C.T. 1501
C.T. 1503–1504
C.T. 1511–1518
East End (Cincinnati)

PRIMARY MEDICAL CARE: Ohio
Service Area Listing

Service Area Name

County—Hamilton
Parts:
C.T. 43–44
C.T. 47.02
East Toledo
County—Lucas
Parts:
C.T. 46
C.T. 47.01–47.02
C.T. 48
C.T. 48.99–49.00
C.T. 50–53
Eastern Clermont
County—Clermont
Parts:
Batavia Township
Franklin Township
Goshen Township
Jackson Township
Monroe Township
Ohio Township
Pierce Township
Stonelick Township
Tate Township
Washington Township
Wayne Township
Williamsburg Township
Eastern Hamilton
County—Butler
Parts:
C.T. 3–4
C.T. 6
C.T. 7.01–7.02
Eastside Youngstown
County—Mahoning
Parts:
C.T. 8001–8007
C.T. 8040
Freeport
County—Guernsey
Parts:
Londonderry Township
Madison Township
Washington Township
County—Harrison
Parts:
Freeport Township
Moorefield Township
Nottingham Township
Washington Township
County—Tuscarawas
Parts:
Perry Township
Hough/Norwood/Glenville
County—Cuyahoga
Parts:
C.T. 1112–1113
C.T. 1114.01–1114.02
C.T. 1115–1118
C.T. 1119.01–1119.02
C.T. 1121–1128
C.T. 1161–1168
C.T. 1181–1185
C.T. 1186.01–1186.02
C.T. 1189
Lower Linden (N.E. Columbus)
County—Franklin
Parts:
C.T. 7.20
C.T. 7.30
C.T. 9.10
C.T. 9.20

PRIMARY MEDICAL CARE: Ohio
Service Area Listing

Service Area Name

C.T. 14–15
C.T. 23
C.T. 25.10
C.T. 29
C.T. 75.11–75.12
C.T. 75.20
C.T. 75.34
C.T. 76
Millvale
County—Hamilton
Parts:
C.T. 28
C.T. 77
C.T. 85.02
C.T. 86.01
Mt Pleasant/Union-Miles/Corlett
County—Cuyahoga
Parts:
C.T. 1155
C.T. 1198–1199
C.T. 1204–1206
C.T. 1207.01–1207.02
C.T. 1208.01–1208.02
C.T. 1211–1213
C.T. 1214.01–1214.02
C.T. 1215–1216
C.T. 1275
Near North/University
County—Franklin
Parts:
C.T. 6
C.T. 10
C.T. 11.10
C.T. 12–13
C.T. 16–17
C.T. 18.10
C.T. 18.20
C.T. 20–22
C.T. 32
Near Southside Toledo
County—Lucas
Parts:
C.T. 38
C.T. 40–42
C.T. 54
New Matamoras
County—Monroe
Parts:
Benton Township
Jackson Township
County—Washington
Parts:
Grandview Township
Independence Township
Liberty Township
Ludlow Township
NE Canton
County—Stark
Parts:
C.T. 7002–7005
C.T. 7018
Orwell
County—Ashtabula
Parts:
Colebrook Township
Hartsgrove Township
Morgan Township
New Lyme Township
Orwell Township
Rome Township
Trumbull Township
Windsor Township

PRIMARY MEDICAL CARE: Ohio
Service Area Listing

Service Area Name

County—Trumbull
Parts:
Bloomfield Township
Greene Township
Gustavus Township
Kinsman Township
Mesopotamia Township
Southside Youngstown
County—Mahoning
Parts:
C.T. 8010
C.T. 8016–8017
C.T. 8019–8025
Southwest Side (Springfield)
County—Clark
Parts:
C.T. 1–3
C.T. 8
C.T. 9.01–9.02
C.T. 10
C.T. 11.01–11.02
C.T. 12
The Flats (Warren)
County—Trumbull
Parts:
C.T. 9205–9207
West Dayton
County—Montgomery
Parts:
C.T. 2–4
C.T. 6–7
C.T. 9–10
C.T. 12–14
C.T. 35–45
C.T. 602–603
C.T. 702.01–702.02
C.T. 703
West End (Cincinnati)
County—Hamilton
Parts:
C.T. 2
C.T. 3.01–3.02
C.T. 4
C.T. 8
C.T. 14–15
West Middletown
County—Butler
Parts:
C.T. 128–132
C.T. 138–140
Western Collinwood
County—Cuyahoga
Parts:
C.T. 1169
C.T. 1171.01–1171.02
C.T. 1172.01–1172.02
C.T. 1173–1175
C.T. 1179
C.T. 1261
Woodsfield
County—Monroe
Parts:
Adams Township
Bethel Township
Center Township
Franklin Township
Green Township
Lee Township
Malaga Township
Ohio Township
Perry Township
Salem Township

PRIMARY MEDICAL CARE: Ohio
Service Area Listing

Service Area Name

Seneca Township
Summit Township
Sunsbury Township
Switzerland Township
Washington Township
Wayne Township

PRIMARY MEDICAL CARE: Ohio
Population Group Listing

Population Group

Homeless—Dayton
County—Montgomery
Parts:
C.T. 15
C.T. 21
Low Inc—Adams Co
County—Adams
Parts:
Low Income
Low Inc—Athens
County—Athens
Parts:
Low Income
Low Inc—Center City/Dorr (Toledo)
County—Lucas
Parts:
C.T. 24.02
C.T. 25–29
C.T. 31–37
Low Inc—Central/Fairfax/Kinsman
County—Cuyahoga
Parts:
C.T. 1079
C.T. 1087–1089
C.T. 1091–1093
C.T. 1096–1099
C.T. 1101–1103
C.T. 1129
C.T. 1131–1139
C.T. 1141–1145
C.T. 1147–1148
Low Inc—Coshocton Co
County—Coshocton
Parts:
Low Income
Low Inc—East Liverpool
County—Columbiana
Parts:
Center Twp
East Liverpool City
Elk Run Twp
Franklin Twp
Hanover Twp
Liverpool Twp
Madison Twp
Middleton Twp
St Clair Twp
Unity Twp
Washington Twp
Wayne Twp
Wellsville City
Yellow Creek Twp
County—Jefferson
Parts:
Brush Creek Twp
Saline Twp
Low Inc—Fayette Co
County—Fayette
Parts:
Low Income
Low Inc—Franklinton (Columbus)

PRIMARY MEDICAL CARE: Ohio
Population Group Listing

Population Group

County—Franklin
Parts:
C.T. 41–44
C.T. 49–51
Low Inc—Hardin Co
County—Hardin
Parts:
Low Income
Low Inc—Highland Co
County—Highland
Parts:
Low Income
Low Inc—Hocking Co
County—Hocking
Parts:
Low Income
Low Inc—Holmes Co
County—Holmes
Parts:
Low Income
Low Inc—Jackson Co
County—Jackson
Parts:
Low Income
Low Inc—Lee Miles (Cleveland)
County—Cuyahoga
Parts:
C.T. 1217–1219
C.T. 1221–1223
Low Inc—Meigs Co
County—Meigs
Parts:
Low Income
Low Inc—Morrow Co
County—Morrow
Parts:
Low Income
Low Inc—Near Southside (Columbus)
County—Franklin
Parts:
C.T. 37–38
C.T. 53
C.T. 54.10
C.T. 54.20
C.T. 55
C.T. 56.10
C.T. 56.20
C.T. 58.20
C.T. 59–61
C.T. 87.10
C.T. 87.20
C.T. 87.30
Low Inc—Pickaway Co
County—Pickaway
Parts:
Low Income
Low Inc—Pike Co
County—Pike
Parts:
Low Income
Low Inc—Richland
County—Richland
Parts:
Low Income
Low Inc—S Tuscarawas Co
County—Tuscarawas
Parts:
Clay Twp
Mill Twp
Oxford Twp
Rush Twp
Salem Twp

PRIMARY MEDICAL CARE: Ohio
Population Group Listing

Population Group

Union Twp
Warwick Twp
Washington Twp
Low Inc—Scioto Co
County—Scioto
Parts:
Low Income
Low Inc—Tiffin/Fostoria
County—Hancock
Parts:
C.T. 1 (Fostoria)
County—Seneca
Parts:
Low Income
County—Wood
Parts:
C.T. 222 (Fostoria)
Low Inc/MFW—Sandusky Co
County—Sandusky
Parts:
Low Income
MFW
Low Income—Near West/Westside/Edgewate
County—Cuyahoga
Parts:
C.T. 1011.01
C.T. 1012–1019
C.T. 1021.01–1021.02
C.T. 1022–1023
C.T. 1024.01–1024.02
C.T. 1025–1026
C.T. 1031–1039

PRIMARY MEDICAL CARE: Ohio
Facility Listing

Facility Name

Free Clinic Of Greater Cleveland 4
County—Cuyahoga
Maternal And Child Health Center
County—Butler
Neighborhood Family Practice
County—Cuyahoga
Noble Corr Fac
County—Noble

PRIMARY MEDICAL CARE: Oklahoma
County Listing

County Name

*Adair
*Alfalfa
*Atoka
Canadian
Facility: FCI El Reno
*Choctaw
*Coal
Creek
Population Group: Low Inc—Mounds
*Delaware
Population Group: Amer Indian Pop Delaware County
*Grant
*Harper
*Haskell
*Hughes
*Johnston
*Latimer
Population Group: Low Inc—Latimer Co
*Lincoln
Logan
*Marshall

PRIMARY MEDICAL CARE: Oklahoma
County Listing

County Name

*Mayes
Population Group: Native American Pop—Mayes Co
McClain
*McCurtain
Population Group: Native Am—Mccurtain Co (S)
*McIntosh
*Muskogee
Population Group: American Indian Pop Muskogee County
*Nowata
Service Area: Nowata
*Okfuskee
Oklahoma
Service Area: N.E. Oklahoma Co
Service Area: S.E. Oklahoma City
*Okmulgee
Population Group: Low Inc—Mounds
*Pittsburg
Service Area: Quinton
Population Group: Native Am—Pittsburg (S)
*Pontotoc
Population Group: Medicaid—Pontotoc Co
Pottawatomie
Service Area: Konawa
*Roger Mills
*Seminole
Service Area: Konawa
Sequoyah
Population Group: Amer Indian Pop Sequoyah County
*Texas
Service Area: Texoma
*Tillman
Tulsa
Service Area: North Tulsa
Population Group: Am In—Tulsa
*Washita

PRIMARY MEDICAL CARE: Oklahoma
Service Area Listing

Service Area Name

Konawa
County—Pottawatomie
Parts:
Maud Division
Wanette-Asher Division
County—Seminole
Parts:
Konawa Division
Seminole South Division
N.E. Oklahoma Co
County—Oklahoma
Parts:
C.T. 1080.03
C.T. 1080.05
C.T. 1080.10–1080.11
C.T. 1088.01
C.T. 1088.03–1088.04
North Tulsa
County—Tulsa
Parts:
C.T. 2–10
C.T. 12–14
C.T. 57
C.T. 62
C.T. 79
C.T. 80.01–80.02
C.T. 91.01

PRIMARY MEDICAL CARE: Oklahoma
Service Area Listing

Service Area Name

Nowata
County—Nowata
Parts:
Lenapah-Delaware Division
Nowata Division
South Coffeyville-Wann Division
Quinton
County—Pittsburg
Parts:
Quinton Division
S.E. Oklahoma City
County—Oklahoma
Parts:
C.T. 1037–1041
C.T. 1046–1050
C.T. 1053–1054
C.T. 1073.04
Texoma
County—Texas
Parts:
West Texas Division

PRIMARY MEDICAL CARE: Oklahoma
Population Group Listing

Population Group

Am In—Tulsa
County—Tulsa
Parts:
American Indian
Amer Indian Pop Delaware County
County—Delaware
Parts:
American Indian
Amer Indian Pop Sequoyah County
County—Sequoyah
Parts:
American Indian
American Indian Pop Muskogee County
County—Muskogee
Parts:
American Indian
Low Inc—Latimer Co
County—Latimer
Parts:
Low Income
Low Inc—Mounds
County—Creek
Parts:
C.T. 215
County—Okmulgee
Parts:
C.T. 6
Medicaid—Pontotoc Co
County—Pontotoc
Parts:
Medicaid
Native Am—Mccurtain Co (S)
County—McCurtain
Parts:
Native American
Native Am—Pittsburg (S)
County—Pittsburg
Parts:
Native American
Native American Pop—Mayes Co
County—Mayes
Parts:
Native American

PRIMARY MEDICAL CARE: Oklahoma
Facility Listing

Facility Name

FCI El Reno
County—Canadian

PRIMARY MEDICAL CARE: Oregon
County Listing

County Name

*Baker
Service Area: Halfway
*Benton
Service Area: Alsea
Clackamas
Service Area: Estacada
Service Area: Mt. Hood
Population Group: MSFWs—Western Clackamas Co
*Columbia
Service Area: Clatskanie
Service Area: East Columbia
Service Area: Vernonia
*Coos
Service Area: Powers
*Curry
Population Group: Low Inc—Port Orford
Population Group: Low Inc—Brookings
*Deschutes
Service Area: La Pine
*Douglas
Population Group: Low Inc/MFW—Douglas Co
*Gilliam
Service Area: Arlington
Service Area: Condon
*Grant
*Harney
Population Group: Low Inc—Harney Co
*Hood River
Population Group: MSFW—Hood River Co
Jackson
Service Area: Shady Cove
Population Group: MFW—Ashland/Phoenix
*Jefferson
Service Area: Madras
*Josephine
Service Area: Cave Junction
Service Area: Williams
Population Group: Low Inc—N Josephine Co
*Klamath
Service Area: Bly
Service Area: Chiloquin
Population Group: Low Inc/MFW—Klamath Falls
*Lake
Service Area: Silver Lake
Lane
Service Area: Lowell
Service Area: McKenzie
Service Area: Oakridge
Service Area: Triangle Lake/Swisshome
Population Group: Homeless-Mid Lane Co
*Malheur
Service Area: Jordan Valley
Service Area: Nyssa (OR/ID)
Service Area: Vale
Population Group: MSFW—Ontario
Facility: Snake River Corr. I.
Marion
Population Group: Low Inc/MFW/Homeless-Polk & Marion
*Morrow
Service Area: Boardman

PRIMARY MEDICAL CARE: Oregon
County Listing

County Name

Service Area: Heppner
Polk
Population Group: Low Inc/MFW/Homeless-Polk & Marion
*Sherman
Service Area: Moro/Grass Valley
Service Area: Wasco
*Tillamook
Service Area: Nehalem
Service Area: Pacific City/Cloverdale
Population Group: Low Inc/Homeless—Tillamook/Bay City
*Umatilla
Population Group: Low Inc/MFW—Umatilla Co
Facility: E Oregon Corr I
*Union
Service Area: Elgin
*Wasco
Service Area: Maupin/Dufur
Population Group: MFW—The Dalles
Washington
Population Group: MFW—W. Washington Co
*Wheeler
Yamhill
Facility: FCI Sheridan

PRIMARY MEDICAL CARE: Oregon
Service Area Listing

Service Area Name

Alsea
County—Benton
Parts:
C.T. 103
Arlington
County—Gilliam
Parts:
Arlington Division
Bly
County—Klamath
Parts:
Langell Division
Boardman
County—Morrow
Parts:
Boardman Division
Cave Junction
County—Josephine
Parts:
Cave Junction Division
Wilderville Division
Chiloquin
County—Klamath
Parts:
Chiloquin Division
Crescent Lake Division
Clatskanie
County—Columbia
Parts:
Clatskanie Division
Marshland Division
Condon
County—Gilliam
Parts:
Condon Division
East Columbia
County—Columbia
Parts:
Goble Division
Rainier Division

PRIMARY MEDICAL CARE: Oregon
Service Area Listing

Service Area Name

Scappoose Division
St. Helens Division
Elgin
County—Union
Parts:
Elgin Division
Estacada
County—Clackamas
Parts:
Estacada Division
Halfway
County—Baker
Parts:
Eagle Valley Division
Halfway Division
Heppner
County—Morrow
Parts:
Heppner Division
Ione-Lexington Division
Jordan Valley
County—Malheur
Parts:
Jordan Division
La Pine
County—Deschutes
Parts:
C.T. 9902–9905
Lowell
County—Lane
Parts:
Lowell Division
Madras
County—Jefferson
Parts:
Ashwood Division
Culver Division
Madras Division
Maupin/Dufur
County—Wasco
Parts:
Dufur CCD
McKenzie
County—Lane
Parts:
McKenzie Division
Moro/Grass Valley
County—Sherman
Parts:
Moro Division
Mt. Hood
County—Clackamas
Parts:
Mount Hood Division
Nehalem
County—Tillamook
Parts:
Nehalem Division
Nyssa (OR/ID)
County—Malheur
Parts:
Adrian Division
Nyssa Division
Owyhee Division
Oakridge
County—Lane
Parts:
Oakridge Division
Pacific City/Cloverdale
County—Tillamook
Parts:
Beaver Division

PRIMARY MEDICAL CARE: Oregon
Service Area Listing

Service Area Name

Neskowin Division
Powers
County—Coos
Parts:
Powers Division
Shady Cove
County—Jackson
Parts:
Butte Falls-Prospect Division
Shady Cove Division
Silver Lake
County—Lake
Parts:
Silver Lake-Fort Rock Division
Triangle Lake/Swisshome
County—Lane
Parts:
Middle Siuslaw-Triangle Lake Div
Vale
County—Malheur
Parts:
Brogan Division
Juntura Division
Vale Division
West Vale Division
Vernonia
County—Columbia
Parts:
Vernonia Division
Wasco
County—Sherman
Parts:
Wasco Division
Williams
County—Josephine
Parts:
Williams Division

PRIMARY MEDICAL CARE: Oregon
Population Group Listing

Population Group

Homeless-Mid Lane Co
County—Lane
Parts:
Badger Mountain Div
Coburg Div
Cottage Grove Div
Creswell Div
Eugene-Springfield Div
Junction City Div
Marcola Div
Pleasant Hill Div
Upper Siuslaw Div
Low Inc—Brookings
County—Curry
Parts:
Brookings CCD
Harbor CCD
Low Inc—Harney Co
County—Harney
Parts:
Low Income
Low Inc—N Josephine Co
County—Josephine
Parts:
Grants Pass Div
Northwest Josephine Div
Low Inc—Port Orford
County—Curry
Parts:
Agness Division

PRIMARY MEDICAL CARE: Oregon
Population Group Listing

Population Group

Port Orford Division
Low Inc/Homeless—Tillamook/Bay City
County—Tillamook
Parts:
Bay City CCD
Tillamook CCD
Low Inc/MFW—Douglas Co
County—Douglas
Parts:
Low Income/MFW
Low Inc/MFW—Klamath Falls
County—Klamath
Parts:
Keno CCD
Klamath Falls CCD
Malinccd
Merrill CCD
Low Inc/MFW—Umatilla Co
County—Umatilla
Parts:
Low Income
Migrant Farmworkers
Low Inc/MFW/Homeless-Polk & Marion
County—Marion
Parts:
Low Inc/MFW/Homeless
County—Polk
Parts:
Low Inc/MFW/Homeless
MFW—Ashland/Phoenix
County—Jackson
Parts:
Ashland CCD
Eagle Point CCD
Southeast Jackson CCD
Southwest Jackson CCD
MFW—The Dalles
County—Wasco
Parts:
The Dalles CCD
MFW—W. Washington Co
County—Washington
Parts:
Chehalem Mt CCD
Coast Range CCD
Forest Grove-Cornelius
North Plains CCD
MSFW—Hood River Co
County—Hood River
Parts:
MSFW
MSFW—Ontario
County—Malheur
Parts:
Ontario CCD
MSFWs—Western Clackamas Co
County—Clackamas
Parts:
Beaver Creek CCD
Canby CCD
Colton CCD
Molalla CCD
Mulino CCD
Northwest Clackamas CCD
Redland CCD
Sandy CCD
Wilsonville CCD
Yoder CCD

PRIMARY MEDICAL CARE: Oregon
Facility Listing

Facility Name

E Oregon Corr I
County—Umatilla
FCI Sheridan
County—Yamhill
Snake River Corr. I.
County—Malheur

PRIMARY MEDICAL CARE: Pennsylvania
County Listing

County Name

Allegheny
Service Area: Arlington Heights/St Clair
Service Area: Hill District
Service Area: Homewood-Brushton
Service Area: Manchester
Service Area: McKees Rocks-Stowe
Service Area: McKeesport City
Service Area: North Braddock
Service Area: South Braddock
Service Area: West End Pittsburgh
Population Group: Low Inc—East Liberty
*Armstrong
Service Area: Armstrong-Clarion
Service Area: Dayton/Rural Valley
Service Area: Kiski Valley
Service Area: New Bethlehem/Hawthorn
Service Area: Northeast Butler
Beaver
Population Group: Low Inc—East Liverpool
*Bedford
Service Area: Broad Top/Cromwell
Population Group: Low Inc—Pleasantville
Blair
Population Group: Low Inc—Pleasantville
*Bradford
Service Area: La Porte
Butler
Service Area: Northeast Butler
Cambria
Service Area: Coalport
Population Group: Low Inc—Ebensburg
Facility: SCI Cresson
*Cameron
Centre
Service Area: Snow Shoe
Population Group: Low Inc—Philipsburg
Facility: SCI Rockview
*Clarion
Service Area: Armstrong-Clarion
Service Area: New Bethlehem/Hawthorn
Service Area: Tionesta
*Clearfield
Service Area: Coalport
Service Area: Mahaffey
Service Area: Snow Shoe
Population Group: Low Inc—Philipsburg
Facility: SCI Houtzdale
*Clinton
Service Area: Snow Shoe
Service Area: Western Lycoming
Columbia
Service Area: Eastern Lycoming
*Crawford
Service Area: Conneautville
Service Area: Union City/Corry
Population Group: Low Inc—Titusville
Cumberland
Facility: SCI Camp Hill
Dauphin
Service Area: Millersburg
Population Group: Low Inc—Harrisburg

PRIMARY MEDICAL CARE: Pennsylvania
County Listing

County Name

*Elk
Service Area: Marienville
Erie
Service Area: Union City/Corry
Population Group: Low Inc—Erie City
Fayette
Service Area: Markleysburg
Service Area: Republic
Population Group: Low Inc—Greensboro
*Forest
Service Area: Marienville
Service Area: Tionesta
*Franklin
Service Area: Dry Run
Population Group: Low Inc/MFW—Chambersburg
*Fulton
Service Area: Broad Top/Cromwell
Service Area: Hancock (MD/PA)
*Greene
Service Area: Clay/Battelle (WV/PA)
Population Group: Low Inc—Carmichaels
Population Group: Low Inc—Greensboro
Population Group: Low Inc—Western Greene
Facility: SCI Greene
*Huntingdon
Service Area: Alexandria
Service Area: Broad Top/Cromwell
Service Area: Mt. Union
Population Group: Low Inc—Big Valley
Facility: SCI Smithfield
*Indiana
Service Area: Dayton/Rural Valley
Service Area: North Indiana
Population Group: Low Inc—Punxsutawney
Population Group: Low Inc—Ebensburg
*Jefferson
Population Group: Low Inc—Punxsutawney
*Juniata
Population Group: Low Inc—Middleburg
Population Group: Low Inc—Mifflintown
Lancaster
Service Area: SE Lancaster City
Population Group: Low Inc—Welsh Mountain
Lycoming
Service Area: Eastern Lycoming
Service Area: Northern Lycoming
Service Area: Western Lycoming
Facility: SCI Muncy
*McKean
Population Group: Low Inc—Coudersport
Facility: FCI Mckean
Mercer
Service Area: Stoneboro
*Mifflin
Service Area: Mt. Union
Population Group: Low Inc—Big Valley
Monroe
Service Area: Mount Pocono
Service Area: South Monroe
*Northumberland
Service Area: Herndon
Service Area: Millersburg
Philadelphia
Service Area: Upper N. East Philadelphia
Service Area: Upper N. West Philadelphia
Population Group: Low Inc—Lower North Philadelphia
*Pike
Population Group: Low Inc—Paupack

PRIMARY MEDICAL CARE: Pennsylvania
County Listing

County Name

*Potter
Service Area: Westfield
Population Group: Low Inc—Coudersport
*Schuylkill
Service Area: Millersburg
Facility: FCI Schuylkill
*Snyder
Population Group: Low Inc—Middleburg
Population Group: Low Inc—Mcclure
Somerset
Service Area: Indian Lake
Population Group: Low Inc—Confluence Service Area
*Sullivan
Service Area: La Porte
Service Area: Northern Lycoming
*Susquehanna
Service Area: Montrose
*Tioga
Service Area: Blossburg
Service Area: Elkland (NY/PA)
Service Area: Western Lycoming
Service Area: Westfield
Population Group: Low Inc—Coudersport
*Union
Population Group: Low Inc—Mcclure
Facility: FCI Allenwood
Facility: USP Allenwood
Facility: USP Lewisburg
*Venango
Service Area: Tionesta
Population Group: Low Inc—Titusville
*Warren
Service Area: Marienville
Service Area: Tionesta
Service Area: Union City/Corry
Population Group: Low Inc—Titusville
*Wayne
Population Group: Low Inc—Honesdale
Population Group: Low Inc—Northern Wayne
Population Group: Low Inc—Paupack
Westmoreland
Service Area: Kiski Valley
Population Group: Low Inc—Ebensburg
York
Population Group: Low Inc—York City

PRIMARY MEDICAL CARE: Pennsylvania
Service Area Listing

Service Area Name

Alexandria
County—Huntingdon
Parts:
Alexandria Borough
Franklin Township
Logan Township
Morris Township
Petersburg Borough
Porter Township
Spruce Creek Township
Arlington Heights/St Clair
County—Allegheny
Parts:
C.T. 1603–1604
C.T. 1606
Armstrong-Clarion
County—Armstrong
Parts:
Bradys Bend Township
Madison Township

PRIMARY MEDICAL CARE: Pennsylvania
Service Area Listing

Service Area Name

Perry Township
Sugarcreek Township
Washington Township
County—Clarion
Parts:
Brady Township
East Brady Borough
Madison Township
Rimersburg Borough
Blossburg
County—Tioga
Parts:
Bloss Township
Blossburg Borough
Covington Township
Duncan Township
Hamilton Township
Liberty Borough
Liberty Township
Putnam Township
Union Township
Ward Township
Broad Top/Cromwell
County—Bedford
Parts:
Broad Top Township
Coaldale Borough
Hopewell Borough
Hopewell Township
Liberty Township
Saxton Borough
County—Fulton
Parts:
Dublin Township
Taylor Township
Wells Township
County—Huntingdon
Parts:
Broad Top City Borough
Carbon Township
Clay Township
Coalmont Borough
Dublin Township
Dudley Borough
Hopewell Township
Juniata Township
Lincoln Township
Marklesburg Borough
Penn Township
Saltillo Borough
Shade Gap Borough
Smithfield Township
Springfield Township
Three Springs Borough
Todd Township
Walker Township
Wood Township
Clay/Battelle (WV/PA)
County—Greene
Parts:
Freeport Township
Gilmore Township
Springhill Township
Wayne Township
Coalport
County—Cambria
Parts:
Reade Township
White Township
County—Clearfield
Parts:
Beccaria Township

PRIMARY MEDICAL CARE: Pennsylvania
Service Area Listing

Service Area Name

Bigler Township
Chest Township
Coalport Borough
Glen Hope Borough
Gulich Township
Irvona Borough
Jordan Township
Ramey Borough
Westover Borough
Conneautville
County—Crawford
Parts:
Beaver Township
Conneaut Township
Conneautville Borough
Spring Township
Springboro Borough
Summerhill Township
Dayton/Rural Valley
County—Armstrong
Parts:
Atwood Borough
Boggs Township
Cowanshannock Township
Dayton Borough
Elderton Borough
Pine Township
Plumcreek Township
Rural Valley Borough
Valley Township
Wayne Township
County—Indiana
Parts:
Plumville Borough
South Mahoning Township
Dry Run
County—Franklin
Parts:
Fannett Township
Metal Township
Eastern Lycoming
County—Columbia
Parts:
Greenwood Township
Jackson Township
Madison Township
Millville Borough
Pine Township
County—Lycoming
Parts:
Franklin Township
Jordan Township
Moreland Township
Penn Township
Picture Rocks Borough
Shrewsbury Township
Elkland (NY/PA)
County—Tioga
Parts:
Elkland Borough
Elkland Township
Farmington Township
Nelson Township
Osceola Township
Hancock (MD/PA)
County—Fulton
Parts:
Bethel Township
Thompson Township
Union Township
Herndon
County—Northumberland

PRIMARY MEDICAL CARE: Pennsylvania
Service Area Listing

Service Area Name

Parts:
Herndon Borough
Jackson Township
Jordan Township
Little Mahanoy Township
Upper Mahanoy Township
Washington Township
West Cameron Township
Zerbe Township
Hill District
County—Allegheny
Parts:
C.T. 305
C.T. 314
C.T. 501–502
C.T. 506
C.T. 508–511
Homewood-Brushton
County—Allegheny
Parts:
C.T. 1207
C.T. 1301–1306
C.T. 5604
C.T. 5606
C.T. 5611–5612
Indian Lake
County—Somerset
Parts:
Central City Borough
Indian Lake Borough
Shade Township
Shanksville Borough
Stonycreek Township
Kiski Valley
County—Armstrong
Parts:
Apollo Borough
Bethel Township
Burrell Township
Gilpin Township
Kiskiminetas Township
Leechburg Borough
North Apollo Borough
Parks Township
South Bend Township
County—Westmoreland
Parts:
Allegheny Township
Avonmore Borough
Bell Township
East Vandergrift Borough
Hyde Park Borough
Oklahoma Borough
Vandergrift Borough
Washington Township
West Leechburg Borough
La Porte
County—Bradford
Parts:
Albany Township
New Albany Borough
Overton Township
Wilmot Township
County—Sullivan
Parts:
Cherry Township
Colley Township
Davidson Township
Dushore Borough
Eagles Mere Borough
Elkland Township
Forks Township

PRIMARY MEDICAL CARE: Pennsylvania
Service Area Listing

Service Area Name

Forksville Borough
Hillsgrove Township
Laporte Borough
Laporte Township
Shrewsbury Township
Mahaffey
County—Clearfield
Parts:
Bell Township
Burnside Borough
Burnside Township
Ferguson Township
Grampian Borough
Greenwood Township
Lumber City Borough
Mahaffey Borough
New Washington Borough
Newburg Borough
Penn Township
Manchester
County—Allegheny
Parts:
C.T. 2107
C.T. 2503
C.T. 2507–2508
Marienville
County—Elk
Parts:
Millstone Township
County—Forest
Parts:
Barnett Township
Green Township
Howe Township
Jenks Township
Kingsley Township
County—Warren
Parts:
Cherry Grove Township
Sheffield Township
Markleysburg
County—Fayette
Parts:
Henry Clay Township
Markleysburg Borough
Ohiopyle Borough
Stewart Township
Wharton Township
McKees Rocks-Stowe
County—Allegheny
Parts:
C.T. 4621
C.T. 4626
C.T. 4639
C.T. 4644
McKeesport City
County—Allegheny
Parts:
C.T. 5010
C.T. 5509
C.T. 5512–5513
C.T. 5519–5524
Millersburg
County—Dauphin
Parts:
Berrysburg Borough
Elizabethville Borough
Gratz Borough
Halifax Borough
Halifax Township
Jackson Township
Jefferson Township

PRIMARY MEDICAL CARE: Pennsylvania
Service Area Listing

Service Area Name

Lykens Borough
Lykens Township
Mifflin Township
Millersburg Borough
Pillow Borough
Reed Township
Rush Township
Upper Paxton Township
Washington Township
Wayne Township
Wiconisco Township
Williams Township
Williamstown Borough
County—Northumberland
Parts:
Lower Mahanoy Township
County—Schuylkill
Parts:
Porter Township
Tower City Borough
Montrose
County—Susquehanna
Parts:
Auburn Township
Bridgewater Township
Brooklyn Township
Dimock Township
Forest Lake Township
Franklin Township
Great Bend Township
Great Bend Borough
Hallstead Borough
Harford Township
Hop Bottom Borough
Jessup Township
Lathrop Township
Lenox Township
Liberty Township
Montrose Borough
New Milford Township
New Milford Borough
Rush Township
Silver Lake Township
Springville Township
Mount Pocono
County—Monroe
Parts:
Barrett Township
Coolbaugh Township
Jackson Township
Mount Pocono Borough
Paradise Township
Pocono Township
Price Township
Tobyhanna Township
Tunkhannock Township
Mt. Union
County—Huntingdon
Parts:
Brady Township
Cass Township
Cassville Borough
Cromwell Township
Mapleton Borough
Mill Creek Borough
Mount Union Borough
Orbisonia Borough
Rockhill Furnace Borough
Shirley Township
Shirleysburg Borough
Tell Township
Union Township

PRIMARY MEDICAL CARE: Pennsylvania
Service Area Listing

Service Area Name

County—Mifflin
Parts:
Bratton Township
Kistler Borough
McVeytown Borough
Newton Hamilton Borough
Oliver Township
Wayne Township
New Bethlehem/Hawthorn
County—Armstrong
Parts:
Mahoning Township
Redbank Township
South Bethlehem Borough
County—Clarion
Parts:
Hawthorn Borough
New Bethlehem Borough
Porter Township
Redbank Township
North Braddock
County—Allegheny
Parts:
C.T. 5041
C.T. 5100
C.T. 5120
C.T. 5128–5129
C.T. 5138
C.T. 5140
North Indiana
County—Indiana
Parts:
Cherry Tree Borough
East Mahoning Township
Ernest Borough
Grant Township
Green Township
Marion Center Borough
Montgomery Township
Rayne Township
Northeast Butler
County—Armstrong
Parts:
Hovey Township
Parker City
County—Butler
Parts:
Allegheny Township
Bruin Borough
Cherry Valley Borough
Concord Township
Eau Claire Borough
Fairview Borough
Fairview Township
Karns City Borough
Parker Township
Petrolia Borough
Venango Township
Washington Township
Northern Lycoming
County—Lycoming
Parts:
Cascade Township
Gamble Township
Lewis Township
McIntyre Township
McNett Township
Mill Creek Township
Plunketts Creek Township
County—Sullivan
Parts:
Fox Township

PRIMARY MEDICAL CARE: Pennsylvania
Service Area Listing

Service Area Name

Republic
County—Fayette
Parts:
Brownsville Borough
Brownsville Township
Luzerne Township
Redstone Township
Fannet Twp
Parts:
Metal Twp
Snow Shoe
County—Centre
Parts:
Boggs Township
Burnside Township
Curtin Township
Howard Township
Howard Borough
Liberty Township
Milesburg Borough
Snow Shoe Township
Snow Shoe Borough
Union Township
Unionville Borough
County—Clearfield
Parts:
Cooper Township
Covington Township
Karthaus Township
County—Clinton
Parts:
Beech Creek Township
Beech Creek Borough
West Keating Township
South Braddock
County—Allegheny
Parts:
C.T. 4824
C.T. 4838
C.T. 4843
C.T. 4850
C.T. 4867–4869
C.T. 4882
South Monroe
County—Monroe
Parts:
Chestnuthill Township
Eldred Township
Polk Township
Ross Township
Stoneboro
County—Mercer
Parts:
Coolspring Township
Deer Creek Township
Fairview Township
Fredonia Borough
French Creek Township
Jackson Center Borough
Jackson Township
Lake Township
Mill Creek Township
New Lebanon Borough
New Vernon Township
Perry Township
Sandy Lake Township
Sandy Lake Borough
Stoneboro Borough
SE Lancaster City
County—Lancaster
Parts:
C.T. 1
C.T. 7–9
C.T. 14–16
Tionesta
County—Clarion
Parts:
Farmington Township
Knox Township
Washington Township
County—Forest
Parts:
Harmony Township
Hickory Township
Tionesta Borough
Tionesta Township
County—Venango
Parts:
Pinegrove Township
President Township
County—Warren
Parts:
Deerfield Township
Limestone Township
Tidioute Borough
Triumph Township
Union City/Corry
County—Crawford
Parts:
Bloomfield Township
Rockdale Township
Spartansburg Borough
Sparta Township
County—Erie
Parts:
Amity Township
Concord Township
Corry City
Elgin Borough
Greene Township
Le Boeuf Township
Mill Village Borough
Union Township
Union City Borough
Venango Township
Waterford Township
Waterford Borough
Wattsburg Borough
Wayne Township
County—Warren
Parts:
Columbus Township
Spring Creek Township
Upper N. East Philadelphia
County—Philadelphia
Parts:
C.T. 175–176
C.T. 194–199
C.T. 287
Upper N. West Philadelphia
County—Philadelphia
Parts:
C.T. 170–174
C.T. 200–205
C.T. 280
C.T. 283–284
West End Pittsburgh
County—Allegheny
Parts:
C.T. 2004
C.T. 2017–2022
C.T. 2024
C.T. 2807–2808
C.T. 2814
C.T. 2816
Western Lycoming
County—Clinton
Parts:
Gallagher Township
County—Lycoming
Parts:
Brown Township
Cogan House Township
Cummings Township
Jackson Township
McHenry Township
Pine Township
Watson Township
County—Tioga
Parts:
Elk Township
Morris Township
Westfield
County—Potter
Parts:
Harrison Township
Hector Township
County—Tioga
Parts:
Brookfield Township
Chatham Township
Clymer Township
Deerfield Township
Knoxville Borough
Westfield Borough
Westfield Township

PRIMARY MEDICAL CARE: Pennsylvania
Population Group Listing

Population Group

Low Inc—Big Valley
County—Huntingdon
Parts:
Barree Twp
Jackson Twp
Miller Twp
County—Mifflin
Parts:
Armagh Twp
Brown Twp
Decatur Twp
Menno Twp
Union Twp
Low Inc—Carmichaels
County—Greene
Parts:
Carmichaels Borough
Clarksville Borough
Cumberland Township
Jefferson Borough
Jefferson Township
Morgan Township
Rices Landing Borough
Low Inc—Confluence Service Area
County—Somerset
Parts:
Addison Twp
Addison Borough
Casselman Borough
Confluence Borough
Lower Turkeyfoot Twp
Middlecreek Twp
Seven Springs Borough
Upper Turkeyfoottwp
Ursina Borough

PRIMARY MEDICAL CARE: Pennsylvania
Population Group Listing

Population Group

Low Inc—Coudersport
County—McKean
Parts:
Annin Township
Ceres Township
Eldred Borough
Eldred Township
Keating Township
Liberty Township
Norwich Township
Otto Township
Port Allegany Borough
Smethport Borough
County—Potter
Parts:
Abbott Township
Allegany Township
Austin Borough
Bingham Township
Clara Township
Coudersport Borough
East Fork District
Eulalia Township
Galton Borough
Genesee Township
Hebron Township
Homer Township
Keating Township
Oswayo Township
Oswayo Borough
Pike Township
Pleasant Valley Township
Portage Township
Roulette Township
Sharon Township
Shinglehouse Borough
Stewardson Township
Summit Township
Sweden Township
Sylvania Township
Ulysses Borough
Ulysses Township
West Branch Township
Wharton Township
County—Tioga
Parts:
Gaines Township
Low Inc—East Liberty
County—Allegheny
Parts:
C.T. 818
C.T. 1016–1017
C.T. 1113–1115
C.T. 1201–1204
C.T. 1208
Low Inc—East Liverpool
County—Beaver
Parts:
Georgetown Boro
Glasgow Boro
Greene Twp
Hookstown Boro
Ohioville Boro
Low Inc—Ebensburg
County—Cambria
Parts:
Allegheny Borough
Ashville Borough
Barnesboro Borough
Barr Township
Blacklick Township
Cambria Township

PRIMARY MEDICAL CARE: Pennsylvania
Population Group Listing

Population Group

Carrolltown Borough
Cassandra Borough
Chest Springs Borough
Cresson Borough
Cresson Township
East Carroll Township
Ebensburg Borough
Gallitzin Borough
Gallitzin Township
Jackson Township
Lilly Borough
Loretto Borough
Munster Township
Nanty-Glo Borough
Patton Borough
Portage Borough
Portage Township
Sankertown Borough
Spangler Borough
Susquehanna Township
Tunnelhill Borough
Vintondale Borough
Washington Township
West Carroll Township
County—Indiana
Parts:
Armagh Borough
Buffington Township
East Wheatfield Township
Pine Township
West Wheatfield
County—Westmoreland
Parts:
New Florence Borough
Seward Borough
St. Clair Township
Low Inc—Erie City
County—Erie
Parts:
C.T. 1–31
Low Inc—Greensboro
County—Fayette
Parts:
Nicholson Twp
Point Marion Boro
Springhill Twp
County—Greene
Parts:
Dunkard Twp
Greene Twp
Greensboro Boro
Monongahela Twp
Low Inc—Harrisburg
County—Dauphin
Parts:
C.T. 201–217
Low Inc—Honesdale
County—Wayne
Parts:
Berlin Township
Bethany Borough
Canaan Township
Cherry Ridge Township
Clinton Township
Dyberry Townshhip
Honesdale Borough
Oregon Township
Prompton Borough
South Canaan Township
Texas Township
Waymart Borough
Low Inc—Lower North Philadelphia

PRIMARY MEDICAL CARE: Pennsylvania
Population Group Listing

Population Group

County—Philadelphia
Parts:
C.T. 126–133
C.T. 133–142
C.T. 144–157
C.T. 162–169
Low Inc—Mcclure
County—Snyder
Parts:
Adams Twp
McClure Boro
Spring Twp
West Beaver Twp
County—Union
Parts:
Hartley Twp
Hartleton Boro
Low Inc—Middleburg
County—Juniata
Parts:
Monroe Township
Susquehanna Township
County—Snyder
Parts:
Beaver Township
Beavertown Borough
Centre Township
Chapman Township
Franklin Township
Freeburg Borough
Middleburg Borough
Perry Township
Union Township
Washington Township
West Perry Township
Low Inc—Mifflintown
County—Juniata
Parts:
Beale Township
Fayette Township
Fermanagh Township
Lack Township
Mifflin Borough
Mifflintown Borough
Milford Township
Port Royal Borough
Spruce Hill Township
Turbett Township
Tuscarora Township
Walker Township
Low Inc—Northern Wayne
County—Wayne
Parts:
Buckingham Township
Damascus Township
Lebanon Township
Manchester Township
Mt. Pleasant Township
Preston Township
Scott Township
Starrucca Borough
Low Inc—Paupack
County—Pike
Parts:
Blooming Grove Twp.
Greene Township
Lackawaxen Township
Palmyra Township
Porter Townsip
Shohola Township
County—Wayne
Parts:

PRIMARY MEDICAL CARE: Pennsylvania
Population Group Listing

Population Group

Dreher Township
Hawley Borough
Lake Township
Palmyra Township
Paupack Township
Salem Township
Sterling Township
Low Inc—Philipsburg
County—Centre
Parts:
Philipsburg Boro
Rush Twp
South Philipsburg Boro
County—Clearfield
Parts:
Boggs Twp
Brisbin Boro
Chester Hill Boro
Decatur Twp
Graham Twp
Houtzdale Boro
Morris Twp
Osceola Mills Boro
Wallaceton Boro
Woodward Twp
Low Inc—Pleasantville
County—Bedford
Parts:
East St. Clair Township
Kimmel Township
King Township
Lincoln Township
Pleasantville Borough
St. Clairsville Borough
Union Township
West St. Clair Township
County—Blair
Parts:
Greenfield Township
Low Inc—Punxsutawney
County—Indiana
Parts:
Banks Township
Canoe Township
Glen Campbellborough
North Mahoning Township
Smicksburg Borough
West Mahoning Township
County—Jefferson
Parts:
Beaver Township
Bell Township
Big Run Borough
Gaskill Township
Henderson Township
McCalmont Township
Oliver Township
Perry Township
Porter Township
Punxsutawney Burough
Ringgold Township
Timblin Borough
Worthville Borough
Young Township
Low Inc—Titusville
County—Crawford
Parts:
Athens Township
Centreville Borough
Hydetown Borough
Oil Creek Township
Randolph Township

PRIMARY MEDICAL CARE: Pennsylvania
Population Group Listing

Population Group

Richmond Township
Rome Township
Steuben Township
Titusville City
Townville Borough
Troy Township
Wayne Township
County—Venango
Parts:
Allegheny Township
Cherrytree Township
Cooperstown Borough
Jackson Township
Oilcreek Township
Pleasantville Borough
Plum Township
County—Warren
Parts:
Eldred Township
Southwest Township
Low Inc—Welsh Mountain
County—Lancaster
Parts:
Bart Twp
Brecknock Twp
Caernarvon Twp
Christiana Boro
Colerain Twp
Earl Twp
East Earl Twp
Eden Twp
Leacock Twp
Little Britain Twp
New Holland Boro
Paradise Twp
Quarryville Boro
Sadsbury Twp
Salisbury Twp
Terre Hill Boro
Low Inc—Western Greene
County—Greene
Parts:
Aleppo Twp
Center Twp
Franklin Twp
Gray Twp
Jackson Twp
Morris Twp
Richhill Twp
Washington Twp
Waynesburg Boro
Low Inc—York City
County—York
Parts:
C.T. 1–3
C.T. 5–7
C.T. 9–12
C.T. 15–16
Low Inc/MFW—Chambersburg
County—Franklin
Parts:
Chambersburg Boro
Hamilton Twp
Letterkenny Twp
St. Thomas Twp

PRIMARY MEDICAL CARE: Pennsylvania
Facility Listing

Facility Name

FCI Allenwood
County—Union

PRIMARY MEDICAL CARE: Pennsylvania
Facility Listing

Facility Name

FCI Mckean
County—McKean
FCI Schuylkill
County—Schuylkill
SCI Camp Hill
County—Cumberland
SCI Cresson
County—Cambria
SCI Greene
County—Greene
SCI Houtzdale
County—Clearfield
SCI Muncy
County—Lycoming
SCI Rockview
County—Centre
SCI Smithfield
County—Huntingdon
USP Allenwood
County—Union
USP Lewisburg
County—Union

PRIMARY MEDICAL CARE: Rhode Island
County Listing

County Name

Newport
Population Group: Low Inc—Newport/Middletown
Providence
Service Area: Northwest Providence
Service Area: Northwest Woonsocket
Population Group: Low Inc—Pawtucket/Central Falls
Population Group: Low Inc—Providence City
Facility: RI Adult Corr Inst (Cranston)
Washington
Population Group: Narragansett Indian Tribe
Facility: Health Center Of South County
Facility: Wood River Health Services

PRIMARY MEDICAL CARE: Rhode Island
Service Area Listing

Service Area Name

Northwest Providence
County—Providence
Parts:
Burrillville Town
Foster Town
Glocester Town
Northwest Woonsocket
County—Providence
Parts:
C.T. 172
C.T. 174
C.T. 176
C.T. 178–182

PRIMARY MEDICAL CARE: Rhode Island
Population Group Listing

Population Group

Low Inc—Newport/Middletown 2
County—Newport
Parts:
C.T. 402
C.T. 403.02–403.03
C.T. 405–408

PRIMARY MEDICAL CARE: Rhode Island
Population Group Listing

Population Group

C.T. 410
C.T. 412
Low Inc—Pawtucket/Central Falls
County—Providence
Parts:
C.T. 109–111
C.T. 149–156
C.T. 156–161
C.T. 163–166
C.T. 167.97–167.98
C.T. 168–171
Low Inc—Providence City
County—Providence
Parts:
C.T. 1–23
C.T. 25–33
C.T. 35–37
Narragansett Indian Tribe
County—Washington
Parts:
Charlestown Town

PRIMARY MEDICAL CARE: Rhode Island
Facility Listing

Facility Name

Health Center Of South County
County—Washington
RI Adult Corr Inst (Cranston)
County—Providence
Wood River Health Services
County—Washington

PRIMARY MEDICAL CARE: South Carolina
County Listing

County Name

*Abbeville
Population Group: Low Inc—Abbeville
Aiken
Population Group: Low Inc—Aiken Co
*Allendale
Facility: Low Co Health Care System
Anderson
Population Group: Low Inc—Anderson Co
*Bamberg
Population Group: Low Inc—Bamberg
*Barnwell
Population Group: Low Inc—Barnwell
*Beaufort
Service Area: Sheldon
Berkeley
Service Area: McClellanville
Service Area: Northern Berkeley
*Calhoun
Charleston
Service Area: McClellanville
Service Area: Sea Island
Population Group: Low Inc—North Charleston
Population Group: Low Inc—Peninsula Charleston
Cherokee
Population Group: Low Inc—Cherokee
*Chester
Population Group: Low Inc—Chester Co
*Chesterfield
Service Area: Sandhills
Population Group: Low Inc—Society Hill/E Chesterfield
*Clarendon
*Colleton

PRIMARY MEDICAL CARE: South Carolina
County Listing

County Name

Population Group: Low Inc—Colleton
*Darlington
Population Group: Low Inc—Darlington
Population Group: Low Inc—Society Hill/E Chesterfield
*Dillon
Population Group: Low Inc—Dillon
Dorchester
Service Area: St George
Edgefield
*Fairfield
Florence
Service Area: Johnsonville/Brittons Neck
Service Area: Olanta
Population Group: Low Inc—Florence
Population Group: Low Inc—Lake City
*Georgetown
Population Group: Low Inc—Georgetown
Greenville
Service Area: Slater-Marietta
Population Group: Low Inc—Inner City Greenville
*Hampton (g)
Facility: FCI Estil
Horry
Population Group: Low Inc—Little River
Population Group: Low Inc—Loris
Population Group: Low Inc—Conway
*Jasper
*Kershaw
Population Group: Low Inc—Kershaw
*Laurens
Population Group: Low Inc—Laurens
*Lee
Lexington
Service Area: Batesburg/Leesville
Service Area: Pelion-Swansea
*Marion
Service Area: Johnsonville/Brittons Neck
Population Group: Low Inc—Marion/Mullins
*Marlboro
*McCormick
*Newberry
Service Area: Whitmire
*Oconee
Population Group: Low Inc—Oconee Co
*Orangeburg
Service Area: Eastern Orangeburg
Population Group: Low Inc—Western Orangeburg
Pickens
Population Group: Low Inc—Pickens
Richland
Service Area: Eastover/Hopkins
Population Group: Low Inc—Columbia
*Saluda
Spartanburg
Service Area: Chesnee
Service Area: Woodruff/Enoree
Sumter
Service Area: Olanta
*Union
*Williamsburg
York
Service Area: Western York
Population Group: Low Inc—South Rock Hill

PRIMARY MEDICAL CARE: South Carolina
Service Area Listing

Service Area Name

Batesburg/Leesville
County—Lexington
Parts:
Batesburg-Leesville Division
Gilbert Division
Chesnee
County—Spartanburg
Parts:
Chesnee Division
Mayo Division
Eastern Orangeburg
County—Orangeburg
Parts:
Bowman Division
Elloree Division
Eutawville Division
Holly Hill Division
Vance Division
Eastover/Hopkins
County—Richland
Parts:
Eastover Division
Hopkins Division
Johnsonville/Brittons Neck
County—Florence
Parts:
Johnsonville Division
County—Marion
Parts:
Brittons Neck Division
Centenary Division
McClellanville
County—Berkeley
Parts:
C.T. 204.01
County—Charleston
Parts:
C.T. 46.01
C.T. 50
Northern Berkeley
County—Berkeley
Parts:
Bonneau Division
Cross Division
Moncks Corner Division
St. Stephen Division
Olanta
County—Florence
Parts:
Olanta Division
Sardis Division
County—Sumter
Parts:
Shiloh Division
Pelion-Swansea
County—Lexington
Parts:
Pelion Division
Swansea Division
Sandhills
County—Chesterfield
Parts:
Jefferson Division
McBee Division
Pageland Division
Sea Island
County—Charleston
Parts:
Edisto Island Division
Johns Island Division
Ravenel Division
Wadmalaw Island Division

PRIMARY MEDICAL CARE: South Carolina
Service Area Listing

Service Area Name

Sheldon
County—Beaufort
Parts:
Sheldon Division
Slater-Marietta
County—Greenville
Parts:
Highland Division
Slater Division
Tigerville Division
St George
County—Dorchester
Parts:
Harleyville Division
Reevesville Division
St. George Division
Western York
County—York
Parts:
Clover Division
Hickory Grove Division
McConnells Division
York Division
Whitmire
County—Newberry
Parts:
Whitmire Division
Woodruff/Enoree
County—Spartanburg
Parts:
Enoree Division
Woodruff Division

PRIMARY MEDICAL CARE: South Carolina
Population Group Listing

Population Group

Low Inc—Abbeville
County—Abbeville
Parts:
Low Income
Low Inc—Aiken Co
County—Aiken
Parts:
Low Income
Low Inc—Anderson Co
County—Anderson
Parts:
Low Income
Low Inc—Bamberg
County—Bamberg
Parts:
Low Income
Low Inc—Barnwell
County—Barnwell
Parts:
Low Income
Low Inc—Cherokee
County—Cherokee
Parts:
Low Income
Low Inc—Chester Co
County—Chester
Parts:
Low Income
Low Inc—Colleton
County—Colleton
Parts:
Low Income
Low Inc—Columbia
County—Richland
Parts:

PRIMARY MEDICAL CARE: South Carolina
Population Group Listing

Population Group

C.T. 1–19
C.T. 20.01–20.02
C.T. 21–28
C.T. 105.01–105.02
C.T. 106
C.T. 107.01–107.03
C.T. 108.02–108.04
C.T. 109–110
C.T. 111.01–111.02
C.T. 112.01–112.02
C.T. 114.04
C.T. 115
C.T. 116.03–116.06
C.T. 117.01–117.02
Low Inc—Conway
County—Horry
Parts:
Aynor CCD
Conway CCD
Conway East CCD
Low Inc—Darlington
County—Darlington
Parts:
Darlington Division
Lake Swanp Division
Lamar Division
Low Inc—Dillon
County—Dillon
Parts:
Low Income
Low Inc—Florence
County—Florence
Parts:
Danwood Division
Florence Division
Pamplico Division
Timmonsville Division
Low Inc—Georgetown
County—Georgetown
Parts:
Andrews CCD
Georgetown CCD
Plantersville CCD
Pleasanthill-Folly Grove
Sampit-Santee CCD
Low Inc—Inner City Greenville
County—Greenville
Parts:
C.T. 1–10
C.T. 12.02
C.T. 13.01
C.T. 21.04–21.05
C.T. 21.08
C.T. 22.01–22.02
C.T. 23.03–23.04
Low Inc—Kershaw
County—Kershaw
Parts:
Low Income
Low Inc—Lake City
County—Florence
Parts:
Coward CCD
Lake City—Scranton
Low Inc—Laurens
County—Laurens
Parts:
Low Income
Low Inc—Little River
County—Horry
Parts:
C.T. 401–402

PRIMARY MEDICAL CARE: South Carolina
Population Group Listing

Population Group

Low Inc—Loris
County—Horry
Parts:
Floyd CCD
Longs CCD
Loris CCD
Low Inc—Marion/Mullins
County—Marion
Parts:
Marion CCD
Mullins CCD
Low Inc—North Charleston
County—Charleston
Parts:
C.T. 37
C.T. 41
C.T. 43–45
Low Inc—Oconee Co
County—Oconee
Parts:
Low Income
Low Inc—Peninsula Charleston
County—Charleston
Parts:
C.T. 4
C.T. 6–11
C.T. 13–14
Low Inc—Pickens
County—Pickens
Parts:
Low Income
Low Inc—Society Hill/E Chesterfield
County—Chesterfield
Parts:
Cheraw Division
Chesterfield Division
Patrick Division
County—Darlington
Parts:
Society Hill Division
Low Inc—South Rock Hill
County—York
Parts:
C.T. 601.01–601.02
C.T. 602–603
C.T. 604.01–604.02
C.T. 605.01–605.02
Low Inc—Western Orangeburg
County—Orangeburg
Parts:
Branchville Div
Cope Div
Neeses Div
North Div
Norway Div
Orangeburg Div
Orangeburg West Div
Springfield Div

PRIMARY MEDICAL CARE: South Carolina
Facility Listing

Facility Name

FCI Estil
County—Hampton
Low Co Health Care System
County—Allendale

PRIMARY MEDICAL CARE: South Dakota
County Listing

County Name

*Aurora

PRIMARY MEDICAL CARE: South Dakota
County Listing

County Name

Service Area: Corsica/Armour
Service Area: Wessington Springs
*Bennett
*Brookings
Service Area: Flandreau/Elkton
*Brown
Service Area: Dickey/Brown (ND/SD)
*Buffalo
Service Area: Wessington Springs
*Butte
Service Area: Newell
*Campbell
*Charles Mix
*Clark
*Corson
Service Area: Isabel
Service Area: Lemmon (SD/ND)
Service Area: McLaughlin
*Custer
Service Area: Hermosa Service Area
*Davison
Service Area: Corsica/Armour
*Day
*Deuel
*Dewey
Service Area: Eagle Butte
Service Area: Isabel
*Douglas
Service Area: Corsica/Armour
*Edmunds
*Fall River
*Faulk
*Grant
Service Area: Milbank
*Gregory
Service Area: Fairfax
*Haakon
*Hamlin
*Hanson
Service Area: Salem
*Harding
*Hyde
*Jackson
*Jerauld
Service Area: Wessington Springs
*Jones
*Kingsbury
Lincoln
*Lyman
*McCook
Service Area: Salem
*Meade
Service Area: Faith
*Mellette
*Miner
*Moody
Service Area: Flandreau/Elkton
*McPherson
Service Area: Leola
Pennington
Service Area: N. Rapid City
*Perkins
Service Area: Faith
Service Area: Lemmon (SD/ND)
*Potter
Service Area: Gettysburg/Agar
*Roberts
Service Area: Milbank
*Sanborn
Service Area: Wessington Springs
*Shannon
*Spink

PRIMARY MEDICAL CARE: South Dakota
County Listing

County Name

*Sully
Service Area: Gettysburg/Agar
*Todd
*Turner
*Union
Service Area: Beresford/Alcester
Service Area: Elk Point
*Ziebach
Service Area: Eagle Butte
Service Area: Faith
Service Area: Isabel

PRIMARY MEDICAL CARE: South Dakota
Service Area Listing

Service Area Name

Beresford/Alcester
County—Union
Parts:
Alcester Township
Alcester City
Beresford City
Big Springs Township
Emmet Township
Prairie Township
Virginia Township
Corsica/Armour
County—Aurora
Parts:
Aurora Township
Center Township
Stickney Town
Truro Township
Washington Township
County—Davison
Parts:
Baker Township
County—Douglas
Dickey/Brown (ND/SD)
County—Brown
Parts:
Allison Township
Frederick Town
Frederick Township
Greenfield Township
Liberty Township
Osceola Township
Palmyra Township
Richland Township
Savo Township
Eagle Butte
County—Dewey
Parts:
Eagle Butte City
South Dewey Unorg.
County—Ziebach
Parts:
Eagle Butte City
South Ziebach Unorg.
Elk Point
County—Union
Parts:
Brule Township
Elk Point Township
Elk Point City
Richland Unorg.
Fairfax
County—Gregory
Parts:
Bonesteel City
East Gregory Unorg.
Fairfax Town

PRIMARY MEDICAL CARE: South Dakota
Service Area Listing

Service Area Name

Fairfax Township
Pleasant Valley Township
Schriever Township
Southeast Gregory Unorg.
St. Charles Township
Star Valley Township
Faith
County—Meade
Parts:
Eagle Township
Faith City
Howard Township
North Meade Unorg.
Union Township
Upper Red Owl Township
County—Perkins
Parts:
Ada Township
Antelope Township
Beck Township
Brushy Township
Chance Township
Chaudoin Township
Duell Township
Englewood Township
Foster Township
Hall Township
Highland Township
Lone Tree Township
Maltby Township
Martin Township
Moreau Township
South Perkins Unorg.
Southwest Perkins Unorg.
Vickers Township
Vrooman Township
Wells Township
West Central Perkins Unorg.
West Perkins Unorg.
Wyandotte Township
County—Ziebach
Parts:
Dupree Unorg.
Dupree City
Flandreau/Elkton
County—Brookings
Parts:
Elkton Township
Elkton City
County—Moody
Gettysburg/Agar
County—Potter
County—Sully
Hermosa Service Area
County—Custer
Parts:
Buffalo Gap Town
East Custer Unorg.
Fairburn Town
Hermosa Town
Isabel
County—Corson
Parts:
Pleasant Ridge Township
County—Dewey
Parts:
Isabel City
North Dewey Unorg.
Timber Lake City
County—Ziebach
Parts:
North Ziebach Unorg.

PRIMARY MEDICAL CARE: South Dakota
Service Area Listing

Service Area Name

Lemmon (SD/ND)
County—Corson
Parts:
Custer Township
Delaney Township
Grand Valley Township
Lake Township
Lemon, No. 2 Unorg.
McIntosh City
Morristown Town
Pioneer Township
Prairie View Township
Riverside Township
Rolling Green Township
Sherman Township
Twin Butte Township
Watauga Township
West Corson Unorg.
County—Perkins
Parts:
Anderson Township
Barrett Township
Bison Town
Bison Township
Burdick Township
Cash Township
Castle Butte Township
Clark Township
De Witt Township
Duck Creek Unorg.
East Perkins Unorg.
Flat Creek Township
Fredlund Township
Glendo Township
Grand River Township
Horse Creek Township
Independence Unorg.
Lemmon City
Liberty Township
Lincoln Township
Lodgepole Township
Marshfield Township
Meadow Township
Plateau Township
Pleasant Valley Township
Rainbow Township
Rockford Township
Scotch Cap Township
Sidney Township
Strool Township
Trail Township
Vail Township
Viking Township
White Butte Township
White Hill Township
Wilson Township
Leola
County—McPherson
Parts:
Carl Township
Central McPherson Unorg.
Hoffman Township
Leola City
Long Lake Town
Wachter Township
Wacker Township
Weber Township
Wetonka Town
McLaughlin
County—Corson
Parts:
Cadillac Township

PRIMARY MEDICAL CARE: South Dakota
Service Area Listing

Service Area Name

Central Corson Unorg.
Lincoln Township
Mahto Township
McLaughlin City
Mission Township
Northeast Corson Unorg.
Ridgeland Township
Wakpala Township
Walker Township
Milbank
County—Grant
Parts:
Adams Township
Alban Township
Albee Town
Blooming Valley Township
Farmington Township
Georgia Township
Grant Center Township
Kilborn Township
La Bolt Town
Lura Township
Madison Township
Marvin Town
Mazeppa Township
Melrose Township
Milbank City
Osceola Township
Revillo Town
Stockholm Town
Stockholm Township
Strandburg Town
Troy Township
Twin Brooks Town
Twin Brooks Township
Vernon Township
County—Roberts
Parts:
Garfield Township
Geneseo Township
N. Rapid City
County—Pennington
Parts:
C.T. 101–105
C.T. 114–115
Newell
County—Butte
Parts:
East Butte Unorg.
Newell City
Union Township
Vale Township
Salem
County—Hanson
Parts:
Edgerton Township
Emery City
Farmer Town
Spring Lake Township
Taylor Township
County—McCook
Wessington Springs
County—Aurora
Parts:
Belford Township
Bristol Township
Cooper Township
Crystal Lake Township
Eureka Township
Firesteel Township
Gales Township
Hopper Township

PRIMARY MEDICAL CARE: South Dakota
Service Area Listing

Service Area Name

Lake Township
Palatine Township
Patten Township
Plankinton City
Plankinton Township
Pleasant Valley Township
Pleasant Lake Township
White Lake Township
White Lake City
Elvira Township
Parts:
Southeast Buffalo Unorg.
County—Jerauld
County—Sanborn
Parts:
Floyd Township
Jackson Township
Logan Township
Oneida Township
Silver Creek Township
Twin Lake Township
Union Township
Warren Township
Woonsocket Township
Woonsocket City

PRIMARY MEDICAL CARE: Tennessee
County Listing

County Name

Anderson
Service Area: Briceville/Lake City
*Bedford
Population Group: Low Inc—Bedford
*Bledsoe
Service Area: Dayton/Pikeville/Decatur
Blount
Population Group: Low Inc—Blount
*Campbell
Population Group: Low Inc—Campbell Co
Carter
Population Group: Low Inc—Carter
Cheatham
*Claiborne
Population Group: Low Inc—Claiborne Co
*Cocke
Population Group: Low Inc—Cocke Co
*Crockett
Population Group: Low Inc—Crockett Co
*Cumberland
Population Group: Low Inc—Cumberland
Davidson
Population Group: Low Inc—Waverly-Belmont
Population Group: Low Inc—E Nashville
Facility: Downtown Homeless Clinic
*Decatur
Dickson
Service Area: Vanleer/Shiloh
Fayette
*Gibson
Population Group: Low Inc—Gibson
*Giles
Population Group: Low Inc—Giles Co
Grainger
*Greene
Service Area: Baileyton
*Grundy
Hamilton
Service Area: Middle Valley
*Hancock
*Hardeman

PRIMARY MEDICAL CARE: Tennessee
County Listing

Population Group

Hawkins
*Haywood
*Henderson
*Hickman
*Jackson
Jefferson
  Population Group: Low Inc—Jefferson
*Johnson
Knox
  Service Area: Mechanicsville
*Lake
*Lauderdale
*Lawrence
  Population Group: Low Inc—Lawrence
*Lewis
  Population Group: Low Inc—Lewis
*Lincoln
  Population Group: Low Inc—Lincoln
*Macon
Madison
  Service Area: E Jackson
*Marshall
  Population Group: Low Inc—Marshall
*Meigs
  Service Area: Dayton/Pikeville/Decatur
Montgomery
  Service Area: Vanleer/Shiloh
*Moore
*Morgan
*Obion
  Service Area: Hornbeak/Samburg
*Perry
*Pickett
*Polk
  Population Group: Low Inc—Benton/Parkville
*Putnam
  Population Group: Low Inc—Putnam Co
*Rhea
  Service Area: Dayton/Pikeville/Decatur
*Roane
  Population Group: Low Inc—Roane Co
Robertson
  Population Group: Low Inc—Robertson
Rutherford
  Service Area: Eagleville
*Scott
  Population Group: Low Inc—Scott Co
Sevier
  Population Group: Low Inc—Sevier
Shelby
  Population Group: Low Inc—Whitehaven-Levi/NW Oakhaven
  Population Group: Low Inc—Millington
  Population Group: Low Inc—Frayser
  Population Group: Low Inc—NW Memphis
  Facility: Church Health Center
  Facility: FCI Memphis
  Facility: Hope Center
*Stewart
  Population Group: Low Inc—Stewart Co
Tipton
  Population Group: Low Inc—Tipton
*Trousdale
  Population Group: Low Inc—Trousddale
Unicoi
Union
*Van Buren
  Population Group: Low Inc—Van Buren Co
*Warren
  Population Group: Low Inc—Warrren Co
*Weakley

PRIMARY MEDICAL CARE: Tennessee
County Listing

Population Group

  Population Group: Low Inc—Dresden
*White
  Population Group: Low Inc—White

PRIMARY MEDICAL CARE: Tennessee
Service Area Listing

Service Area Name

Baileyton
  County—Greene
    Parts:
      Baileyton Division
      Jearoldstown Division
Briceville/Lake City
  County—Anderson
    Parts:
      Lake City West Division
      New River Division
Dayton/Pikeville/Decatur
  County—Bledsoe
  County—Meigs
  County—Rhea
E Jackson
  County—Madison
    Parts:
      C.T. 5
      C.T. 8–12
Eagleville
  County—Rutherford
    Parts:
      Eagleville Division
Hornbeak/Samburg
  County—Obion
    Parts:
      Dixie Division
      Elbridge-Cloverdale Division
      Hornbeak-Samburg Division
Mechanicsville
  County—Knox
    Parts:
      C.T. 1–7
      C.T. 11–14
      C.T. 20
      C.T. 28
Middle Valley
  County—Hamilton
    Parts:
      Middle Valley Division
      Sale Creek Division
      Soddy-Daisy Division
Vanleer/Shiloh
  County—Dickson
    Parts:
      Vanleer Division
  County—Montgomery
    Parts:
      Palmyra-Shiloh Division

PRIMARY MEDICAL CARE: Tennessee
Population Group Listing

Population Group

Low Inc—Bedford
  County—Bedford
    Parts:
      Low Income
Low Inc—Benton/Parkville
  County—Polk
    Parts:
      Benton CCD
      Parkville CCD
Low Inc—Blount

PRIMARY MEDICAL CARE: Tennessee
Population Group Listing

Population Group

  County—Blount
    Parts:
      Low Income
Low Inc—Campbell Co
  County—Campbell
    Parts:
      Low Income
Low Inc—Carter
  County—Carter
    Parts:
      Low Income
Low Inc—Claiborne Co
  County—Claiborne
    Parts:
      Low Income
Low Inc—Cocke Co
  County—Cocke
    Parts:
      Low Income
Low Inc—Crockett Co
  County—Crockett
    Parts:
      Low Income
Low Inc—Cumberland
  County—Cumberland
    Parts:
      Low Income
Low Inc—Dresden
  County—Weakley
    Parts:
      Chestnut Glade-Dukedom
      Dresden Division
      Gleason Division
      Palmersville Division
Low Inc—E Nashville
  County—Davidson
    Parts:
      C.T. 112–126
Low Inc—Frayser
  County—Shelby
    Parts:
      C.T. 99–100
      C.T. 101.10
      C.T. 101.20
      C.T. 102.10
      C.T. 102.20
      C.T. 103
Low Inc—Gibson
  County—Gibson
    Parts:
      Low Income
Low Inc—Giles Co
  County—Giles
    Parts:
      Low Income
Low Inc—Jefferson
  County—Jefferson
    Parts:
      Low Income
Low Inc—Lawrence
  County—Lawrence
    Parts:
      Low Income
Low Inc—Lewis
  County—Lewis
    Parts:
      Low Income
Low Inc—Lincoln
  County—Lincoln
    Parts:
      Low Income
Low Inc—Marshall

PRIMARY MEDICAL CARE: Tennessee
Population Group Listing

Population Group

County—Marshall
Parts:
Low Income
Low Inc—Millington
County—Shelby
Parts:
C.T. 202.10
C.T. 202.20
C.T. 203–204
Low Inc—NW Memphis
County—Shelby
Parts:
C.T. 1–10
C.T. 13–28
C.T. 30
C.T. 89–90
Low Inc—Putnam Co
County—Putnam
Parts:
Low Income
Low Inc—Roane Co
County—Roane
Parts:
Low Income
Low Inc—Robertson
County—Robertson
Parts:
Low Income
Low Inc—Scott Co
County—Scott
Parts:
Low Income
Low Inc—Sevier
County—Sevier
Parts:
Low Income
Low Inc—Stewart Co
County—Stewart
Parts:
Low Income
Low Inc—Tipton
County—Tipton
Parts:
Low Income
Low Inc—Trousddale
County—Trousdale
Parts:
Low Income
Low Inc—Van Buren Co
County—Van Buren
Parts:
Low Income
Low Inc—Warrren Co
County—Warren
Parts:
Low Income
Low Inc—Waverly-Belmont
County—Davidson
Parts:
C.T. 148
C.T. 160–163
C.T. 170–171
Low Inc—White
County—White
Parts:
Low Income
Low Inc—Whitehaven-Levi/NW Oakhaven
County—Shelby
Parts:
C.T. 104.10
C.T. 104.20
C.T. 105

PRIMARY MEDICAL CARE: Tennessee
Population Group Listing

Population Group

C.T. 220.10
C.T. 220.21–220.22
C.T. 221.11–221.12
C.T. 221.20
C.T. 221.30
C.T. 222.10
C.T. 222.20
C.T. 223.10
C.T. 223.20
C.T. 223.30
C.T. 224.10
C.T. 224.20

PRIMARY MEDICAL CARE: Tennessee
Facility Listing

Facility Name

Church Health Center
County—Shelby
Downtown Homeless Clinic
County—Davidson
FCI Memphis
County—Shelby
Hope Center
County—Shelby

PRIMARY MEDICAL CARE: Texas
County Listing

County Name

*Anderson
Facility: Beto Prs
Facility: Coffield Prs
Facility: Gurney Prs
Facility: Michael Prs
Facility: Powledge Prs
*Angelina
Facility: Diboll Prs
*Aransas
Archer
*Armstrong
*Atascosa
*Austin
*Bailey
*Bandera
Bastrop
*Baylor
Population Group: Low Inc—Baylor
*Bee g)
Facility: McConell Psn
Bexar
Service Area: North Central Bexar
Service Area: San Antonio (West Side)
Service Area: San Antonio (South Side)
Service Area: San Antonio (Eastside)
Service Area: San Antonio (Far East Side)
Facility: Dominguez Prs
*Blanco
*Borden
Bowie
Facility: Telford Prs
Brazoria
Facility: Ramsey I Prs
Facility: Ramsey II Prs
*Brewster
*Briscoe
*Brooks
*Burleson
*Burnet
Population Group: Low Inc—Burnet Co
Caldwell
Cameron (g)

PRIMARY MEDICAL CARE: Texas
County Listing

County Name

Facility: Port Isabel INS Health Facility
*Camp
Population Group: Low Inc—Camp
*Carson
*Chambers
*Cherokee
Facility: Skyview/Hodge Psn
*Cochran
*Coke
*Coleman
*Collingsworth
Comal
Population Group: Low Inc—Comal County
*Comanche
Population Group: Low Inc—Comanche
Coryell (g)
Facility: Gatesville Prison
Facility: Hughes Prs
Facility: Mountain View Prison
*Crane (g)
Facility: Tx Tech Univ Pc Clinics
*Crockett
*Culberson
Dallas
Service Area: Lisbon
Service Area: Simpson-Stuart
Service Area: South Dallas
Service Area: Trinity
Service Area: West Dallas
Facility: Hutchins Prs
Facility: Parkland Ambulatory Care Clinic
Facility: Parkland Internal Med Clinic
*Deaf Smith
*Delta
Denton
Population Group: Low Inc—N Denton
*Dickens
*Dimmit
Service Area: Dimmit-Zavala
*Donley
*Duval
*Eastland
El Paso
Service Area: Lower Valley—El Paso
Service Area: South El Paso
Service Area: Southeast El Paso
Facility: El Paso INS Health Facility
Facility: Tx Tech Med. Ambulatory Cl
*Falls
*Fannin (g)
Facility: Choice Moore Prs
Facility: Cole Prs
*Fisher
*Foard
Fort Bend
Facility: Jester I Prs
Facility: Jester II Prs
*Freestone
Facility: Boyd Prs
*Frio (g)
Facility: Briscoe Prs
*Gaines
Galveston
Service Area: Bolivar Penninsula
*Garza
*Glasscock
*Goliad
*Gonzales
Population Group: Low Inc—Gonzales Co
*Grimes (g)
Facility: Luther Prs
*Hall

PRIMARY MEDICAL CARE: Texas
County Listing

County Name

*Hansford
Hardin
Harris
Service Area: Acres Home
Service Area: Aldine
Service Area: Casa De Amigos
Service Area: East Central Houston
Service Area: Galena Park/Jacinto City
Service Area: Ripley
Service Area: Settegast
Service Area: South Central Houston
Facility: Joe Kegan Psn
Facility: Lychner Prs
*Hartley
*Henderson
Population Group: Low Inc—Henderson Co
Hidalgo (g)
Facility: Lopez Psn
Facility: Segovia Psn
*Hill
*Hockley
*Houston
Facility: Eastham Prs
*Hudspeth
*Irion
*Jackson
*Jasper
Facility: Goodman Prs
Jefferson
Facility: Gist Prs
Facility: Leblanc Prs
Facility: Stiles Prs
*Jim Hogg
Population Group: Low Inc—Jim Hogg
*Jim Wells
Johnson
*Jones
*Karnes (g)
Facility: Conanally Prison
*Kenedy
*Kent
*Kimble
*King
*Kinney
*La Salle
*Lamb
*Lampasas
*Lee
*Leon
Liberty
Facility: Henley Prs
Facility: Hightower Prs
Facility: Plane Prs
*Limestone
*Lipscomb
*Live Oak (g)
Facility: FCI Three Rivers
*Loving
Lubbock
Service Area: East Lubbock
*Lynn
*Madison (g)
Facility: Ferguson Prs
*Marion
*Mason
*Maverick
McLennan
Population Group: Low Inc—Mclennan
*McMullen
*Medina
*Menard
*Milam

PRIMARY MEDICAL CARE: Texas
County Listing

County Name

*Mills
*Mitchell
*Moore
Population Group: Low Inc—Moore Co
*Morris
*Motley
*Nacogdoches
Population Group: Low Inc—Nacogdoches Co
*Newton
Population Group: Low Inc—Newton
*Oldham
Orange
Population Group: Low Inc—Orange
*Palo Pinto
Population Group: Low Inc—Palo Pinto Co
*Panola
Parker
Population Group: Low Inc—Parker
*Parmer
*Polk (g)
Facility: Terrell Prison
*Presidio
*Rains
*Reagan
*Red River
*Reeves
*Refugio
*Roberts
*Robertson
*Runnels
*Rusk
*Sabine
*San Augustine
*San Jacinto
San Patricio
*San Saba
*Schleicher
*Shackelford
*Shelby
Population Group: Low Inc—Shelby Co
*Sherman
*Starr
*Stephens
*Sterling
*Swisher
Tarrant
Service Area: Diamond Hill
Service Area: Poly/Stop Six
*Terrell
*Terry
Tom Green
Population Group: Low Inc—Tom Green
Travis
Service Area: Dove Springs
Service Area: East Austin
Service Area: North West Service Area
Service Area: South Austin
*Trinity
*Tyler (g)
Facility: Lewis Prs
Upshur
*Upton
Population Group: Low Inc—Upton
*Uvalde
Population Group: Low Inc—Uvalde Co
*Val Verde
*Van Zandt
*Walker
Facility: Ellis I Prs
Facility: Holliday Prs
Facility: Wynne Prs

PRIMARY MEDICAL CARE: Texas
County Listing

County Name

Waller
*Ward
Webb
*Wheeler
Population Group: Low Inc—Wheeler Co
Wichita
Population Group: Low Inc—Wichita Co
*Willacy
Wilson
*Winkler
*Wise
*Wood
Facility: Johnston Prs
*Yoakum
*Zapata
*Zavala
Service Area: Dimmit-Zavala

PRIMARY MEDICAL CARE: Texas
Service Area Listing

Service Area Name

Acres Home
County—Harris
Parts:
C.T. 524
C.T. 525.02–525.04
C.T. 530.02
C.T. 531.01
C.T. 531.03
Aldine
County—Harris
Parts:
C.T. 222.01–222.02
C.T. 223.01–223.03
C.T. 224.01
C.T. 240.02
Bolivar Penninsula
County—Galveston
Parts:
C.T. 1254
Casa De Amigos
County—Harris
Parts:
C.T. 502
C.T. 503.01–503.02
C.T. 504
C.T. 505.01–505.02
C.T. 506.01–506.02
C.T. 507.01–507.02
C.T. 508
C.T. 509.02–509.03
C.T. 512
C.T. 514.01–514.02
C.T. 515.02
Diamond Hill
County—Tarrant
Parts:
C.T. 1002.01–1002.02
C.T. 1003–1004
C.T. 1008–1011
C.T. 1050.01
C.T. 1050.06
Dimmit-Zavala
County—Dimmit
County—Zavala
Dove Springs
County—Travis
Parts:
C.T. 24.11–24.13
East Austin
County—Travis

PRIMARY MEDICAL CARE: Texas
Service Area Listing

Population Group

Parts:
C.T. 4.02
C.T. 8.01–8.04
C.T. 9.01–9.02
C.T. 10
C.T. 18.11–18.12
C.T. 21.04–21.13
C.T. 22.01–22.02
C.T. 22.05

East Central Houston
County—Harris
Parts:
C.T. 201.01–201.02
C.T. 202.10
C.T. 202.20
C.T. 203.01–203.03
C.T. 204
C.T. 205.01
C.T. 205.03
C.T. 205.98
C.T. 206.01
C.T. 206.98
C.T. 207.03–207.04
C.T. 208.02–208.03
C.T. 209
C.T. 210.01
C.T. 214.01

East Lubbock
County—Lubbock
Parts:
C.T. 1
C.T. 2.01–2.02
C.T. 3.01–3.02
C.T. 6.03–6.06
C.T. 7–11
C.T. 13–14
C.T. 23–25

Galena Park/Jacinto City
County—Harris
Parts:
C.T. 211–212

Lisbon
County—Dallas
Parts:
C.T. 56–57
C.T. 59.01–59.02
C.T. 87.01
C.T. 87.03–87.05
C.T. 88.01–88.02

Lower Valley—El Paso
County—El Paso
Parts:
C.T. 35
C.T. 37.01–37.02
C.T. 38.01–38.02
C.T. 41.03–41.07
C.T. 42.01–42.02

North Central Bexar
County—Bexar
Parts:
C.T. 1801–1802
C.T. 1809.02
C.T. 1905–1907
C.T. 1910.01–1910.02

North West Service Area
County—Travis
Parts:
C.T. 17.26

Poly/Stop Six
County—Tarrant
Parts:
C.T. 1035
C.T. 1036.01
C.T. 1037.01–1037.02
C.T. 1046.01
C.T. 1046.04
C.T. 1062.01–1062.02
C.T. 1063

Ripley
County—Harris
Parts:
C.T. 300.22–300.23
C.T. 301.01–301.02
C.T. 302
C.T. 308.20
C.T. 309.01–309.03
C.T. 310–312
C.T. 313.01–313.02
C.T. 314.02
C.T. 319.01
C.T. 321.01–321.02

San Antonio (Eastside)
County—Bexar
Parts:
C.T. 1102–1103
C.T. 1110
C.T. 1301–1304
C.T. 1401

San Antonio (Far East Side)
County—Bexar
Parts:
C.T. 1305–1306
C.T. 1308–1313

San Antonio (South Side)
County—Bexar
Parts:
C.T. 1402–1412
C.T. 1416–1418
C.T. 1501–1522
C.T. 1609
C.T. 1610.85
C.T. 1611–1613
C.T. 1615.01–1615.02
C.T. 1618–1620

San Antonio (West Side)
County—Bexar
Parts:
C.T. 1105–1108
C.T. 1601–1606
C.T. 1607.85
C.T. 1616
C.T. 1701–1716
C.T. 1901–1902

Settegast
County—Harris
Parts:
C.T. 207.01–207.02
C.T. 208.01
C.T. 215.01–215.03
C.T. 216.01–216.02
C.T. 217.01–217.02
C.T. 218.03–218.04
C.T. 225.03–225.04
C.T. 227

Simpson-Stuart
County—Dallas
Parts:
C.T. 112–113
C.T. 114.01–114.02
C.T. 167.01
C.T. 169.01

South Austin
County—Travis
Parts:
C.T. 23.04
C.T. 23.10–23.12
C.T. 24.16

South Central Houston
County—Harris
Parts:
C.T. 318.02–318.03
C.T. 319.02
C.T. 325.01–325.02
C.T. 327.01–327.02
C.T. 328.01–328.03
C.T. 329.02–329.03
C.T. 339.03
C.T. 340
C.T. 342
C.T. 343.01–343.02

South Dallas
County—Dallas
Parts:
C.T. 25
C.T. 27.01–27.02
C.T. 28–29
C.T. 33–38
C.T. 39.01–39.02
C.T. 40
C.T. 93.03–93.04
C.T. 115
C.T. 116.01

South El Paso
County—El Paso
Parts:
C.T. 17–21
C.T. 28–29

Southeast El Paso
County—El Paso
Parts:
C.T. 39.01–39.03
C.T. 40.01–40.02
C.T. 103.08–103.10
C.T. 104.01–104.04
C.T. 105

Trinity
County—Dallas
Parts:
C.T. 41
C.T. 49
C.T. 54–55
C.T. 86.01–86.02
C.T. 89

West Dallas
County—Dallas
Parts:
C.T. 43
C.T. 101.01–101.02
C.T. 102–106

PRIMARY MEDICAL CARE: Texas
Population Group Listing

Population Group

Low Inc—Baylor 2
County—Baylor
Parts:
Low Income

Low Inc—Burnet Co
County—Burnet
Parts:
Low Income

Low Inc—Camp
County—Camp
Parts:
Low Income

PRIMARY MEDICAL CARE: Texas
Population Group Listing

Facility Name

Low Inc—Comal County
County—Comal
Parts:
Low Income
Low Inc—Comanche
County—Comanche
Parts:
Low Income
Low Inc—Gonzales Co
County—Gonzales
Parts:
Low Income
Low Inc—Henderson Co
County—Henderson
Parts:
Low Income
Low Inc—Jim Hogg
County—Jim Hogg
Parts:
Low Income
Low Inc—Mclennan
County—McLennan
Parts:
Low Income
Low Inc—Moore Co
County—Moore
Parts:
Low Income
Low Inc—N Denton
County—Denton
Parts:
Denton CCD
Pilot Point—Aubrey CCD
Sanger CCD
Low Inc—Nacogdoches Co
County—Nacogdoches
Parts:
Low Income
Low Inc—Newton
County—Newton
Parts:
Low Income
Low Inc—Orange
County—Orange
Parts:
Low Income
Low Inc—Palo Pinto Co
County—Palo Pinto
Parts:
Low Income
Low Inc—Parker
County—Parker
Parts:
Low Income
Low Inc—Shelby Co
County—Shelby
Parts:
Low Income
Low Inc—Tom Green
County—Tom Green
Parts:
Low Income
Low Inc—Upton
County—Upton
Parts:
Low Income
Low Inc—Uvalde Co
County—Uvalde
Parts:
Low Income
Low Inc—Wheeler Co
County—Wheeler

PRIMARY MEDICAL CARE: Texas
Population Group Listing

Facility Name

Parts:
Low Income
Low Inc—Wichita Co
County—Wichita
Parts:
Low Income

PRIMARY MEDICAL CARE: Texas
Facility Listing

Facility Name

Beto Prs
County—Anderson
Boyd Prs
County—Freestone
Briscoe Prs
County—Frio
Choice Moore Prs
County—Fannin
Coffield Prs
County—Anderson
Cole Prs
County—Fannin
Conanally Prison
County—Karnes
Diboll Prs
County—Angelina
Dominguez Prs
County—Bexar
Eastham Prs
County—Houston
El Paso INS Health Facility
County—El Paso
Ellis I Prs
County—Walker
Ferguson Prs
County—Madison
FCI Three Rivers
County—Live Oak
Gatesville Prison
County—Coryell
Gist Prs
County—Jefferson
Goodman Prs
County—Jasper
Gurney Prs
County—Anderson
Henley Prs
County—Liberty
Hightower Prs
County—Liberty
Holliday Prs
County—Walker
Hughes Prs
County—Coryell
Hutchins Prs
County—Dallas
Jester I Prs
County—Fort Bend
Jester II Prs
County—Fort Bend
Joe Kegan Psn
County—Harris
Johnston Prs
County—Wood
Leblanc Prs
County—Jefferson
Lewis Prs
County—Tyler
Lopez Psn
County—Hidalgo
Luther Prs

PRIMARY MEDICAL CARE: Texas
Facility Listing

Facility Name

County—Grimes
Lychner Prs
County—Harris
McConell Psn
County—Bee
Michael Prs
County—Anderson
Mountain View Prison
County—Coryell
Parkland Ambulatory Care Clinic
County—Dallas
Parkland Internal Med Clinic
County—Dallas
Plane Prs
County—Liberty
Port Isabel INS Health Facility
County—Cameron
Powledge Prs
County—Anderson
Ramsey I Prs
County—Brazoria
Ramsey II Prs
County—Brazoria
Segovia Psn
County—Hidalgo
Skyview/Hodge Psn
County—Cherokee
Stiles Prs
County—Jefferson
Telford Prs
County—Bowie
Terrell Prison
County—Polk
Tx Tech Med. Ambulatory Cl
County—El Paso
Tx Tech Univ Pc Clinics
County—Crane
Wynne Prs
County—Walker

PRIMARY MEDICAL CARE: Utah
County Listing

County Name

*Beaver
Population Group: Low Inc—Beaver Co
*Box Elder
Population Group: Low Inc—Box Elder
*Carbon
Population Group: Low Inc—Carbon County
*Daggett
Davis
Population Group: Low Inc—North Davis
Population Group: Low Inc—South Davis
*Duchesne
Population Group: Low Inc—Duchesne Co
*Emery
*Garfield
*Grand
*Iron
Population Group: Low Inc—Iron
*Juab
Population Group: Low Inc—Juab Co
*Kane
Service Area: Kanab/Fredonia (UT/AZ)
*Morgan
Population Group: Low Inc—Morgan
*Piute
*Rich
Population Group: Low Inc—Rich
Salt Lake

PRIMARY MEDICAL CARE: Utah
County Listing

County Name

Population Group: Low Inc—Salt Lake Co
Facility: Utah State Prison
*San Juan
*Sanpete
Population Group: Low Inc—Sanpete
Facility: Central Utah Corr Fac
*Sevier
*Summit
Service Area: Coalville/Kamas
*Tooele
*Uintah
Utah
Population Group: Low Inc—Utah
*Wasatch
Population Group: Low Inc—Wasatch Co
*Washington
Population Group: Low Inc—Washington
*Wayne
Weber
Population Group: Low Inc—Weber

PRIMARY MEDICAL CARE: Utah
Service Area Listing

Service Area Name

Coalville/Kamas
County—Summit
Parts:
Coalville Division
Kamas Division
Kanab/Fredonia (UT/AZ)
County—Kane
West Wendover

PRIMARY MEDICAL CARE: Utah
Population Group Listing

Population Group

Low Inc—Beaver Co
County—Beaver
Parts:
Low Income
Low Inc—Box Elder
County—Box Elder
Parts:
Low Income
Low Inc—Carbon County
County—Carbon
Parts:
Low Income
Low Inc—Duchesne Co
County—Duchesne
Parts:
Low Income
Low Inc—Iron
County—Iron
Parts:
Low Income
Low Inc—Juab Co
County—Juab
Parts:
Low Income
Low Inc—Millard
Parts:
Low Income
Low Inc—Morgan
County—Morgan
Parts:
Low Income
Low Inc—North Davis
County—Davis
Parts:

PRIMARY MEDICAL CARE: Utah
Population Group Listing

Population Group

C.T. 1252
C.T. 1253.01–1253.02
C.T. 1254.01–1254.02
C.T. 1255–1257
C.T. 1258.01–1258.02
C.T. 1259.03
C.T. 1260
C.T. 1261.04
Low Inc—Rich
County—Rich
Parts:
Low Income
Low Inc—Salt Lake Co
County—Salt Lake
Parts:
Low Income
Low Inc—Sanpete
County—Sanpete
Parts:
Low Income
Low Inc—South Davis
County—Davis
Parts:
C.T. 1266–1267
C.T. 1270.01–1270.02
Low Inc—Utah
County—Utah
Parts:
Low Income
Low Inc—Wasatch Co
County—Wasatch
Parts:
Low—Income
Low Inc—Washington
County—Washington
Parts:
Low—Income
Low Inc—Weber
County—Weber
Parts:
Low Income

PRIMARY MEDICAL CARE: Utah
Facility Listing

Facility Name

Central Utah Corr Fac
County—Sanpete
Utah State Prison
County—Salt Lake

PRIMARY MEDICAL CARE: Vermont
County Listing

County Name

*Addison
Service Area: Route 100
*Caledonia
Population Group: Low Inc—Hardwick
*Essex
Service Area: Island Pond
Service Area: Upper Connecticut Valley (NH/VT)
Franklin
Service Area: Richford-Enosburg
*Lamoille
Population Group: Low Inc—Hardwick
*Orange
Service Area: Chelsea
*Orleans
Service Area: Island Pond
Service Area: Richford-Enosburg

PRIMARY MEDICAL CARE: Vermont
County Listing

County Name

Population Group: Low Inc—Hardwick
Facility: Northern State Correctional Facility
*Rutland
Service Area: Black River Valley
Service Area: Route 100
*Washington
Service Area: Mad River Valley
Population Group: Low Inc—Hardwick
*Windsor
Service Area: Black River Valley
Service Area: Route 100

PRIMARY MEDICAL CARE: Vermont
Service Area Listing

Service Area Name

Black River Valley
County—Rutland
Parts:
Mount Holly Town
County—Windsor
Parts:
Cavendish Town
Ludlow Town
Plymouth Town
Reading Town
Chelsea
County—Orange
Parts:
Chelsea Town
Corinth Town
Strafford Town
Tunbridge Town
Vershire Town
Washington Town
Island Pond
County—Essex
Parts:
Avery's Gore
Brighton Town
Ferdinand Town
Lewis Town
Norton Town
Warner's Grant
Warren's Gore
County—Orleans
Parts:
Charleston Town
Morgan Town
Mad River Valley
County—Washington
Parts:
Fayston Town
Moretown Town
Waitsfield Town
Warren Town
Richford-Enosburg
County—Franklin
Parts:
Bakersfield Town
Berkshire Town
Enosburg Town
Fairfield Town
Franklin Town
Montgomery Town
Richford Town
Sheldon Town
County—Orleans
Parts:
Jay Town
Route 100
County—Addison

PRIMARY MEDICAL CARE: Vermont
Service Area Listing

Service Area Name

Parts:
Granville Town
Hancock Town
County—Rutland
Parts:
Pittsfield Town
County—Windsor
Parts:
Rochester Town
Stockbridge Town
Upper Connecticut Valley (NH/VT)
County—Essex
Parts:
Averill Town
Bloomfield Town
Brunswick Town
Canaan Town
Lemington Town
Maidstone Town

PRIMARY MEDICAL CARE: Vermont
Population Group Listing

Population Group

Low Inc—Hardwick
County—Caledonia
Parts:
Hardwick Town
Stannard Town
Walden Town
County—Lamoille
Parts:
Wolcott Town
County—Orleans
Parts:
Craftsbury Town
Greensboro Town
County—Washington
Parts:
Woodbury Town

PRIMARY MEDICAL CARE: Vermont
Facility Listing

Facility Name

Northern State Correctional Facility
County—Orleans

PRIMARY MEDICAL CARE: Virginia
County Listing

County Name

*Accomack
*Amelia
*Appomattox
Bedford
Service Area: Big Island
*Bland
Botetourt
Service Area: Northern Botetourt
*Brunswick
Service Area: Brunswick/La Crosse
*Buchanan
*Buckingham
Service Area: Buckingham/Cumberland
Campbell/Lynchburg
Service Area: Altavista/Chatham
Facility: Free Clinic Of Central Va
*Caroline
*Carroll
Service Area: Laurel Fork
Charles City
Population Group: Low Inc—Charles City Co
*Charlotte
Chesapeake
Service Area: South Norfolk
*Craig
*Cumberland
Service Area: Buckingham/Cumberland
*Dickenson
Dinwiddie/Petersburg
Service Area: Rowanty
Facility: FCI Petersburg
*Fluvanna
*Franklin
Population Group: Low Inc—Franklin Co
Goochland
Service Area: Goochland/Fife
*Grayson/Galax
Service Area: Trout Dale/Independence
Hanover
Service Area: Beaverdam/Montpelier
*Henry/Martinsville
Population Group: Low Inc—Martinsville
*Highland
Isle Of Wight
Service Area: Berlin-Ivor
King George
*Lee
*Louisa
Service Area: Beaverdam/Montpelier
*Lunenburg
*Mecklenburg
Service Area: Brunswick/La Crosse
Service Area: Chase City
Facility: Comm. Memorial HC—Primary Care Clinic
*Nelson
New Kent
Newport News
Service Area: Newport News
*Northampton
Population Group: Low Inc/MFW—Northampton Co
*Page
*Patrick
Pittsylvania/Danville
Service Area: Altavista/Chatham
Population Group: Low Inc—Danville
Portsmouth City
Population Group: Low Inc—Downtown Portsmouth
*Richmond
Richmond City
Service Area: East End Richmond
Service Area: Old South Richmond
Population Group: Homeless—Richmond City
Roanoke/Roanoke-Salem
Service Area: Northwest Roanoke
*Rockbridge/Buena Vista
Service Area: Big Island
*Russell
*Smyth
Service Area: Konnarock
Service Area: Saltville
*Southampton/Franklin
Service Area: Berlin-Ivor
Spotsylvania/Fredericksbg
Service Area: Beaverdam/Montpelier
Suffolk
Service Area: City Of Suffolk
*Surry
*Sussex
Population Group: Low Inc—Sussex
Washington/Bristol
Service Area: Mendota
Service Area: Saltville
*Westmoreland

PRIMARY MEDICAL CARE: Virginia
Service Area Listing

Service Area Name

Altavista/Chatham
County—Campbell/Lynchburg
Parts:
C.T. 204.98
C.T. 205–209
County—Pittsylvania/Danville
Parts:
C.T. 101–107
Beaverdam/Montpelier
County—Hanover
Parts:
C.T. 3201–3202
County—Louisa
Parts:
C.T. 9501
C.T. 9505
County—Spotsylvania/Fredericksbg
Parts:
C.T. 204.01
Berlin-Ivor
County—Isle Of Wight
Parts:
Hardy District
County—Southampton/Franklin
Parts:
Berlin And Ivor District
Big Island
County—Bedford
Parts:
Peaks District
County—Rockbridge/Buena Vista
Parts:
Natural Bridge District
Brunswick/La Crosse
County—Brunswick
County—Mecklenburg
Parts:
La Crosse District
Buckingham/Cumberland
County—Buckingham
County—Cumberland
Chase City
County—Mecklenburg
Parts:
Bluestone District
Boydton District
Buckhorn District
Chase City District
Clarksville District
City Of Suffolk
County—Suffolk
Parts:
C.T. 651
C.T. 653–655
C.T. 756
East End Richmond
County—Richmond City
Parts:
C.T. 106–111
C.T. 201–212
C.T. 402

PRIMARY MEDICAL CARE: Virginia
Service Area Listing

Service Area Name

Goochland/Fife
County—Goochland
Parts:
C.T. 4002–4005
Konnarock
County—Smyth
Parts:
C.T. 9907
Laurel Fork
Parts:
Laurel Fork District
Mendota
County—Washington/Bristol
Parts:
Tyler District
Newport News
County—Newport News
Parts:
C.T. 301–302
C.T. 302.99
C.T. 303.98
C.T. 304–306
C.T. 308–310
C.T. 313
Northern Botetourt
County—Botetourt
Parts:
C.T. 401–402
Northwest Roanoke
County—Roanoke/Roanoke-Salem
Parts:
C.T. 1–2
C.T. 7–10
C.T. 23
Old South Richmond
County—Richmond City
Parts:
C.T. 601–605
C.T. 607.98
C.T. 608.98
Rowanty
County—Dinwiddie/Petersburg
Parts:
Darvills District
Rowanty District
Sapony District
Saltville
County—Smyth
Parts:
North Fork District
Saltville District
County—Washington/Bristol
Parts:
Jefferson District
South Norfolk
County—Chesapeake
Parts:
C.T. 201–204
C.T. 205.01–205.02
C.T. 206–207
Trout Dale/Independence
County—Grayson/Galax
Parts:
Elk Creek District
Wilson Creek District

PRIMARY MEDICAL CARE: Virginia
Population Group Listing

Population Group

Homeless—Richmond City
County—Richmond City
Parts:
C.T. 301–306
C.T. 412–415
Low Inc—Charles City Co
County—Charles City
Parts:
Low Income
Low Inc—Danville
County—Pittsylvania/Danville
Parts:
C.T. 108.98
C.T. 109–111
C.T. 112.98
C.T. 113.98
C.T. 114
Danville City
Low Inc—Downtown Portsmouth
County—Portsmouth City
Parts:
C.T. 2105
C.T. 2107
C.T. 2110–2111
C.T. 2113–2114
C.T. 2117–2121
C.T. 2126
C.T. 2127.01–2127.02
Low Inc—Franklin Co
County—Franklin
Parts:
Low Income
Low Inc—Martinsville
County—Henry/Martinsville
Parts:
Henry Co
Martinsville City
Low Inc—Sussex
County—Sussex
Parts:
Low Income
Low Inc/MFW—Northampton Co
County—Northampton
Parts:
Low Income/MFW

PRIMARY MEDICAL CARE: Virginia
Facility Listing

Facility Name

Comm. Memorial HC—Primary Care Clinic
County—Mecklenburg
Free Clinic Of Central Va
County—Campbell/Lynchburg
FCI Petersburg
County—Dinwiddie/Petersburg

PRIMARY MEDICAL CARE: Washington
County Listing

County Name

*Adams
Population Group: Low Inc—Adams Co
Facility: Columbia Basin Health Association
Benton
Population Group: Low Inc/MFW—Benton Co
*Chelan
Population Group: MSFW—Chelan/Douglas
*Clallam
Service Area: Clallam Bay-Neah Bay
Population Group: Lower Elwha Indian Tribe (S)

PRIMARY MEDICAL CARE: Washington
County Listing

County Name

Facility: Clallam Bay Corrections Ctr
Clark
Population Group: Low Inc—C. Vancouver/Hazel Dell
Population Group: Low Inc—Camas
*Cowlitz
Population Group: Low Inc—Cowlitz Co
*Douglas
Population Group: MSFW—Chelan/Douglas
*Ferry
Population Group: American Indian—Colville Res
Franklin
Population Group: Low Inc/MFW—Franklin Co
Facility: Coyote Ridge Corr Inst
*Garfield
*Grant
Service Area: Central Grant Co
Service Area: Grand Coulee
Service Area: Royal City
*Grays Harbor
Service Area: Copalis Beach
Service Area: Mc Cleary-Elma
Service Area: Neilton
Service Area: Westport
Population Group: Low Inc—Aberdeen/Hoquiam
*Jefferson
Service Area: Clallam Bay-Neah Bay
Service Area: Quilcene Bay
Population Group: Low Inc—Discovery Bay/Oak Bay
King
Population Group: Low Inc/Homeless—S King Co
Kitsap
Population Group: Low Inc—Bremerton
*Kittitas
Service Area: Cle Elum
*Klickitat
Population Group: Low Inc/MFW—Klickitat Co
*Lewis
Service Area: Morton
Population Group: Low Inc—SW Lewis Co
*Lincoln
Population Group: Low Inc—Lincoln
*Mason (g)
Facility: Wa Corr/Reception Ctr
*Okanogan
Service Area: Grand Coulee
Service Area: South Okanogan County
Service Area: Twisp/Winthrop
Population Group: American Indian—Colville Res
Population Group: MSFW—C Okanogan Co
Population Group: MSFW—N Okanogan Co
*Pacific
Service Area: Raymond
*Pend Oreille
Pierce
Service Area: Longbranch
Population Group: Low Inc—Eastside Tacoma
Population Group: Low Inc—Lakewood (SW Pierce Co)
Facility: McNeil Island Corr. C.
*Skagit

PRIMARY MEDICAL CARE: Washington
County Listing

County Name

Service Area: Concrete
Population Group: Low Inc/MFW—West Skagit Co
*Skamania
Snohomish
Service Area: Darrington
Population Group: Low Inc/Homeless—Snohomish Co
Facility: Twin Rivers Corr C
Spokane
Service Area: Deer Park
Service Area: Rockford
Population Group: Homeless—City Of Spokane (S)
Population Group: Low Inc—Southwestern Spokane
Population Group: Low Inc—Eastern Spokane
*Stevens
Service Area: Chewelah
Service Area: Deer Park
Service Area: Northport
Population Group: Low Inc—Colville
Thurston
Population Group: Low Inc—Thurston South Div
Population Group: Low Inc—Downtown Olympia
*Wahkiakum
Population Group: Low Inc—Wahkiakum Co
*Walla Walla
Population Group: Low Inc/MFW—Walla Walla
Facility: Wa State Pen
Whatcom
Population Group: MSFW—Whatcom Co
*Whitman
Service Area: Rock Lake/La Crosse
Population Group: Low Inc—NE Whitman Co
Yakima
Population Group: MFW—Yakima Co

PRIMARY MEDICAL CARE: Washington
Service Area Listing

Service Area Name

Central Grant Co
County—Grant
Parts:
Ephrata-Soap Lake Division
George Division
Gloyd Division
Moses Lake Division
Quincy Division
Warden Division
Wilson Creek Division
Chewelah
County—Stevens
Parts:
Chewelah Division
Columbia Division
Springdale Division
Clallam Bay-Neah Bay
County—Clallam
Parts:
Clallam Bay-Neah Bay Division
Forks Division
County—Jefferson
Parts:
West End Division

PRIMARY MEDICAL CARE: Washington
Service Area Listing

Service Area Name

Cle Elum
County—Kittitas
Parts:
Cle Elum Division
Manastash Division
Concrete
County—Skagit
Parts:
Upper Skagit Division
Copalis Beach
County—Grays Harbor
Parts:
North Beach Division
Darrington
County—Snohomish
Parts:
Cascade Division
Deer Park
County—Spokane
Parts:
Colbert Division
Deer Park Division
County—Stevens
Parts:
Loon Lake Division
Grand Coulee
County—Grant
Parts:
Coulee City Division
Grand Coulee Division
County—Okanogan
Parts:
C.T. 9701
Longbranch
County—Pierce
Parts:
Lower Peninsula Division
Mc Cleary-Elma
County—Grays Harbor
Parts:
Elma Division
Malone-Porter Division
McCleary Division
Morton
County—Lewis
Parts:
Big Bottom Division
Mineral Division
Morton Division
Mossyrock Division
Neilton
County—Grays Harbor
Parts:
Humptulips Division
Lake Quinault Division
Northport
County—Stevens
Parts:
Kettle Falls Division
Quilcene Bay
County—Jefferson
Parts:
Quilcene Bay Division
Raymond
County—Pacific
Parts:
Raymond Division
Willapa Valley Division
Rock Lake/La Crosse
County—Whitman
Parts:
La Crosse Division

PRIMARY MEDICAL CARE: Washington
Service Area Listing

Service Area Name

Rock Lake Division
Rockford
County—Spokane
Parts:
Rockford Division
Royal City
County—Grant
Parts:
Southern Slopes Division
South Okanogan County
County—Okanogan
Parts:
Brewster-Wakefield Division
Twisp/Winthrop
County—Okanogan
Parts:
Early Winters Division
Methow Valley Division
Westport
County—Grays Harbor
Parts:
South Shore Division

PRIMARY MEDICAL CARE: Washington
Population Group Listing

Population Group

American Indian—Colville Res
County—Ferry
Parts:
Am In—Colville Res
County—Okanogan
Parts:
C.T. 9702–9710
Homeless—City Of Spokane (S)
County—Spokane
Parts:
C.T. 1–47
C.T. 105.01
C.T. 106–115
C.T. 117–131
C.T. 134.01–134.02
C.T. 136–137
Low Inc—Aberdeen/Hoquiam
County—Grays Harbor
Parts:
Aberdeen-Hoquiam CCD
North River CCD
Wishkah CCD
Wyhoochee CCD
Low Inc—Adams Co
County—Adams
Parts:
Low Income
Low Inc—Bremerton
County—Kitsap
Parts:
C.T. 801.01–801.02
C.T. 802–803
C.T. 805–807
C.T. 808.98
C.T. 809.98
C.T. 810–814
C.T. 814.99
C.T. 922–924
Low Inc—C. Vancouver/Hazel Dell
County—Clark
Parts:
C.T. 408.01
C.T. 409.03–409.04
C.T. 410.02–410.03
C.T. 410.05–410.07

PRIMARY MEDICAL CARE: Washington
Population Group Listing

Population Group

C.T. 411.05–411.06
C.T. 416
C.T. 417.03
C.T. 418–421
C.T. 423–429
Low Inc—Camas
County—Clark
Parts:
C.T. 405.02–405.03
C.T. 414–415
Low Inc—Colville
County—Stevens
Parts:
Low Income
Low Inc—Cowlitz Co
County—Cowlitz
Parts:
Low Income
Low Inc—Downtown Olympia
County—Thurston
Parts:
C.T. 101
C.T. 103
Low Inc—Eastern Spokane
County—Spokane
Parts:
C.T. 101
C.T. 132.01
Low Inc—Eastside Tacoma
County—Pierce
Parts:
C.T. 618–627
C.T. 628.01–628.02
C.T. 629–635
Low Inc—Lakewood (SW Pierce Co)
County—Pierce
Parts:
C.T. 714.03–714.05
C.T. 715.01
C.T. 715.03–715.04
C.T. 717.01–717.02
C.T. 718.02–718.04
C.T. 719.01–719.02
C.T. 720
C.T. 721.05–721.08
C.T. 723.06
C.T. 723.08
Low Inc—Lincoln
County—Lincoln
Parts:
Low Income
Low Inc—NE Whitman Co
County—Whitman
Parts:
Rosalia CCD
Steptoe CCD
Tekoa CCD
Low Inc—Southwestern Spokane
County—Spokane
Parts:
C.T. 104.01
C.T. 139
C.T. 140.01–140.02
C.T. 141–142
Low Inc—SW Lewis Co
County—Lewis
Parts:
Boistfort
Ethel
Jackson Praire
Olequa
Low Inc—Thurston South Div

PRIMARY MEDICAL CARE: Washington
Population Group Listing

Population Group

County—Thurston
Parts:
Low Income
Low Inc—Wahkiakum Co
County—Wahkiakum
Parts:
Low Income
Low Inc—Discovery Bay/Oak Bay
County—Jefferson
Parts:
Discovery Bay CCD
Oak Bay CCD
Low Inc/Homeless—S King Co
County—King
Parts:
C.T. 252–254
C.T. 259
C.T. 291
C.T. 292.01–292.02
C.T. 295.01–295.02
C.T. 296–297
C.T. 298.01
C.T. 305.01–305.02
C.T. 306–308
Low Inc/Homeless—Snohomish Co
County—Snohomish
Parts:
C.T 0419.02
C.T. 401.98
C.T. 402–408
C.T. 410–412
C.T. 414–415
C.T. 418.01
C.T. 418.03–418.04
C.T. 419.01
C.T. 510–512
C.T. 514–515
C.T. 517
C.T. 518.01–518.02
Low Inc/MFW—Benton Co
County—Benton
Parts:
Low Income
MFW
Low Inc/MFW—Franklin Co
County—Franklin
Parts:
Low Income
MFW
Low Inc/MFW—Klickitat Co
County—Klickitat
Parts:
Low Income/MFW
Low Inc/MFW—Walla Walla
County—Walla Walla
Parts:
Low Income
MFW
Low Inc/MFW—West Skagit Co
County—Skagit
Parts:
Anacortes CCD
Bayview CCD
Bow CCD
Burlington CCD
Cavanaugh CCD
Clear Lake CCD
Conway CCD
La Conner CCD
Lyman-Hamilton CCD
Mount Vernon CCD
Samish CCD

PRIMARY MEDICAL CARE: Washington
Population Group Listing

Population Group

Sedro-Woolley CCD
Lower Elwha Indian Tribe (S)
County—Clallam
Parts:
Agnew-Carlsborg CCD
Crescent CCD
Port Angeles CCD
Sequim CCD
MFW—Yakima Co
County—Yakima
Parts:
MFW
MSFW—C Okanogan Co
County—Okanogan
Parts:
Concully-Riverside CCD
Okanogan CCD
Omak CCD
MSFW—Chelan/Douglas
County—Chelan
Parts:
MSFW
County—Douglas
Parts:
MSFW
MSFW—N Okanogan Co
County—Okanogan
Parts:
Oroville CCD
Tonasket-Pine Creek CCD
MSFW—Whatcom Co
County—Whatcom
Parts:
MSFW

PRIMARY MEDICAL CARE: Washington
Facility Listing

Facility Name

Clallam Bay Corrections Ctr
County—Clallam
Columbia Basin Health Association
County—Adams
Coyote Ridge Corr Inst
County—Franklin
McNeil Island Corr. C.
County—Pierce
Twin Rivers Corr C
County—Snohomish
Wa Corr/Reception Ctr
County—Mason
Wa State Pen
County—Walla Walla

PRIMARY MEDICAL CARE: West Virginia
County Listing

County Name

*Barbour
Berkeley
Population Group: Low Inc/MFW—Shenandoah
*Boone
Service Area: McDowell
*Braxton
*Calhoun
*Clay
*Doddridge
Service Are: Doddridge/Salem
*Fayette
Service Area: New Haven
*Gilmer

PRIMARY MEDICAL CARE: West Virginia
County Listing

County Name

*Grant
Service Area: Mt Storm-Union District
*Greenbrier
Service Area: Greenbrier
Service Area: Rainelle
*Hampshire
Hancock
Population Group: Low Inc—East Liverpool
*Hardy
Service Area: Baker
*Harrison
Service Area: Doddridge/Salem
*Jackson
Jefferson
Population Group: Low Inc/MFW—Shenandoah
Kanawha
Service Area: Clendenin
*Lincoln
Marshall
Service Area: Cameron
*Mercer
Service Area: Matoaka
*Mingo
Service Area: Gilbert
Service Area: Kermit
*Monongalia
Service Area: Clay/Battelle (WV/PA)
*Monroe
*Morgan
Service Area: Paw Paw
*Nicholas
Service Area: Richwood
*Pendleton
*Preston
Service Area: Bruceton Mills
Service Area: Rowlesburg/Eglon
*Raleigh
Service Area: Northwest Raleigh
Facility: FCI Beckley
*Randolph
Service Area: Huttonsville
*Ritchie
*Roane
*Summers
*Taylor
*Tyler
*Upshur
Service Area: Rock Cave
Wayne
Service Area: Wayne/Fort Gay
*Webster
Service Area: Richwood
*Wetzel
Service Area: Clay/Battelle (WV/PA)
*Wirt
*Wyoming
Population Group: Low Inc—Wyoming

PRIMARY MEDICAL CARE: West Virginia
Service Area Listing

Service Area Name

Baker
County—Hardy
Parts:
Capon District
Lost River District
Bruceton Mills
County—Preston
Parts:
Grant District

PRIMARY MEDICAL CARE: West Virginia
Service Area Listing

Service Area Name

Cameron
County—Marshall
Parts:
C.T. 208
Clay/Battelle (WV/PA)
County—Monongalia
Parts:
C.T. 114
County—Wetzel
Parts:
C.T. 304
Clendenin
County—Kanawha
Parts:
C.T. 112
Doddridge/Salem
County—Doddridge
County—Harrison
Parts:
C.T. 316
Gilbert
County—Mingo
Parts:
Stafford District
Greenbrier
County—Greenbrier
Parts:
Anthony Creek District
Falling Spring District
Williamsburg District
Huttonsville
County—Randolph
Parts:
Huttonsville District
Middle Fork District
Mingo District
Valley Bend District
Kermit
County—Mingo
Parts:
Harvey District
Kermit District
Matoaka
County—Mercer
Parts:
C.T. 9509
C.T. 9516
McDowell
County—Boone
Parts:
District 2
District 1
Mt Storm-Union District
County—Grant
Parts:
Union District
New Haven
County—Fayette
Parts:
C.T. 210–211
Northwest Raleigh
County—Raleigh
Parts:
C.T. 111–112
Paw Paw
County—Morgan
Parts:
C.T. 9709–9710
Rainelle
County—Greenbrier
Parts:
Meadow Bluff District

PRIMARY MEDICAL CARE: West Virginia
Service Area Listing

Service Area Name

Richwood
County—Nicholas
Parts:
Beaver District
County—Webster
Parts:
Glade District
Rock Cave
County—Upshur
Parts:
Banks District
Meade District
Rowlesburg/Eglon
County—Preston
Parts:
Lyon District
Reno District
Union District
Wayne/Fort Gay
County—Wayne
Parts:
Butler District
Stonewall District
Union District

PRIMARY MEDICAL CARE: West Virginia
Population Group Listing

Population Group

Low Inc—East Liverpool
County—Hancock
Parts:
Grant District
Low Inc—Wyoming
County—Wyoming
Parts:
Low Income
Low Inc/MFW—Shenandoah
County—Berkeley
Parts:
Low Income/MFW
County—Jefferson
Parts:
Low Income/MFW

PRIMARY MEDICAL CARE: West Virginia
Facility Listing

Facility Name

FCI Beckley
County—Raleigh

PRIMARY MEDICAL CARE: Wisconsin
County Listing

County Name

*Adams (g)
Facility: FCI Oxford
*Ashland
Service Area: Bayfield
Population Group: Am In—Bad River Tribe
*Barron
Service Area: Chetek/Colfax
*Bayfield
Service Area: Bayfield
Service Area: Hayward/Radisson
Brown
Service Area: Pulaski
Population Group: Am In—Oneida Nation
Facility: Green Bay Maximum Security Inst
*Buffalo
Population Group: Low Inc—Durand

PRIMARY MEDICAL CARE: Wisconsin
County Listing

County Name

Population Group: Low Inc—Mondovi
*Burnett
Calumet
Service Area: Chilton/New Holstein/Brillion
*Clark
*Columbia
Population Group: Amer Ind—Ho-Chunk (S)
Population Group: Low Inc—Portage/Pardeeville
Facility: Columbia Maximum Security Inst
*Crawford
Population Group: Amer Ind/Ho-Chunk(S)
Population Group: Low Inc—Boscobel
Dane
Population Group: Amer Ind/Ho-Chunk(S)
*Dodge
Facility: Dodge Corr Inst
Facility: Fox Lake Medium Security Inst
Facility: Waupun Maximum Security Inst
*Door
Service Area: Sister Bay/Washington Island
Population Group: Low Inc—Sturgeon Bay
Douglas
Service Area: Minong/Solon Springs
*Dunn
Service Area: Chetek/Colfax
Population Group: Low Inc—Durand
Eau Claire
Population Group: Amer Ind/Ho-Chunk(S)
Population Group: Low Inc—Augusta/Osseo
*Florence
*Forest
*Grant
Population Group: Low Inc—Platteville/Cuba City
Population Group: Low Inc—Boscobel
Population Group: Low Inc—Lancaster/Fennimore
*Green
Service Area: Darlington/Shullsburg
*Green Lake
Service Area: Markesan/Kingston
*Iowa
Population Group: Low Inc—Platteville/Cuba City
*Iron
Population Group: Low Inc—Ironwood/Hurley (MI/WI)
*Jackson
Service Area: Galesville/Trempealeau
Population Group: Amer Ind/Ho-Chunk(S)
Population Group: Low Inc—Augusta/Osseo
*Juneau
Service Area: Hillsboro
Population Group: Amer Ind/Ho-Chunk(S)
Kenosha
Service Area: Kenosha
*Kewaunee
Service Area: Kewaunee City/Algoma
La Crosse
Service Area: Coon Valley/Chaseburg
Population Group: Amer Ind/Ho-Chunk(S)
*Lafayette
Service Area: Darlington/Shullsburg
Population Group: Low Inc—Platteville/Cuba City
*Langlade
Service Area: Elcho
Service Area: Mountain/White Lake
*Lincoln
Population Group: Low Inc—Tomahawk
Marathon
Service Area: Tigerton/Birnamwood
Population Group: Amer Ind—Ho-Chunk(S)
Population Group: Low Inc—City Of Wausau
*Marinette
Service Area: W. Marinette
Population Group: Low Inc—E Marinette/S Menominee (MI/WI
*Marquette
*Menominee
Population Group: Low Inc—Menominee Co
Milwaukee
Service Area: Capitol Drive (Milwaukee)
Service Area: Inner City West
Service Area: Inner City South
Service Area: Juneautown
Population Group: Low Inc—Inner City North (Milwaukee)
*Monroe
Service Area: Hillsboro
Service Area: Sparta
Population Group: Amer Ind/Ho-Chunk(S)
*Oconto
Service Area: Mountain/White Lake
Service Area: Oconto/Oconto Falls
Service Area: Pulaski
*Oneida
Service Area: Elcho
Population Group: Low Inc—Tomahawk
Outagamie
Service Area: Clintonville/Marion
Population Group: Am In—Oneida Nation
*Pepin
Population Group: Low Inc—Durand
Population Group: Low Inc—Mondovi
Pierce
Population Group: Low Inc—Durand
*Polk
Service Area: Frederic/Luck
*Price
Racine
Facility: Racine Medium Security Inst
*Richland
Service Area: Hillsboro
Service Area: Spring Green/Plain
Rock
Service Area: Central Beloit
*Rusk
Population Group: Low Inc—Rusk Co
*Sauk
Service Area: Hillsboro
Service Area: Spring Green/Plain
Population Group: Amer Ind/Ho-Chunk(S)
*Sawyer
Service Area: Hayward/Radisson
*Shawano
Service Area: Clintonville/Marion
Service Area: Oconto/Oconto Falls
Service Area: Pulaski
Service Area: Tigerton/Birnamwood
Population Group: Am In—Stockbridge-Munsee Tribe
Population Group: Amer Ind/Ho-Chunk(S)
Sheboygan
Facility: Kettle Moraine Medium Security Inst
*Taylor
*Trempealeau
Service Area: Galesville/Trempealeau
Population Group: Low Inc—Augusta/Osseo
*Vernon
Service Area: Coon Valley/Chaseburg
Service Area: Hillsboro
Population Group: Amer Ind/Ho-Chunk(S)
*Vilas
Service Area: Land O'Lakes/Presque Isle
*Washburn
Service Area: Hayward/Radisson
Service Area: Minong/Solon Springs
Population Group: Low Inc—Spooner/Shell Lake
*Waupaca
Service Area: Clintonville/Marion
Service Area: Tigerton/Birnamwood
*Waushara
Winnebago
Facility: Oshkosh Medium Security Inst
*Wood
Population Group: Amer Ind/Ho-Chunk(S)

PRIMARY MEDICAL CARE: Wisconsin
Service Area Listing

Service Area Name

Bayfield
County—Ashland
Parts:
La Pointe Town
County—Bayfield
Parts:
Bayfield City
Bayfield Town
Bayview Town
Bell Town
Clover Town
Russell Town
Capitol Drive (Milwaukee)
County—Milwaukee
Parts:
C.T. 19–29
C.T. 31
C.T. 36
C.T. 38–49
C.T. 60–61
C.T. 63–65
Central Beloit
County—Rock
Parts:
C.T. 15–19
Chetek/Colfax
County—Barron
Parts:
Arland Town
Chetek City
Chetek Town
Dallas Village
Dallas Town
Dovre Town
Maple Grove Town
Prairie Farm Village
Prairie Lake Town
Prairie Farm Town
Sioux Creek Town
Sumner Town
Turtle Lake Town
Turtle Lake Village
Vance Creek Town
County—Dunn

PRIMARY MEDICAL CARE: Wisconsin
Service Area Listing

Service Area Name

Parts:
Boyceville Village
Colfax Village
Colfax Town
Downing Village
Grant Town
Hay River Town
Knapp Village
New Haven Town
Otter Creek Town
Ridgeland Village
Sand Creek Town
Sheridan Town
Sherman Town
Stanton Town
Tainter Town
Tiffany Town
Wheeler Village
Wilson Town
Chilton/New Holstein/Brillion
County—Calumet
Parts:
Brillion City
Brillion Town
Brothertown Town
Charlestown Town
Chilton City
Chilton Town
Hilbert Village
Kiel City
Kiel City
New Holstein City
New Holstein Town
Potter Village
Rantoul Town
Stockbridge Town
Stockbridge Village
Woodville Town
Clintonville/Marion
County—Outagamie
Parts:
Bear Creek Village
Deer Creek Town
Maine Town
County—Shawano
Parts:
Grant Town
Pella Town
County—Waupaca
Parts:
Bear Creek Town
Clintonville City
Dupont Town
Embarrass Village
Larrabee Town
Marion City
Matteson Town
Union Town
Coon Valley/Chaseburg
County—La Crosse
Parts:
Washington Town
County—Vernon
Parts:
Chaseburg Village
Christiana Town
Coon Town
Coon Valley Village
Hamburg Town
Westby City
Darlington/Shullsburg
County—Green
Parts:
Adams Town
York Town
County—Lafayette
Parts:
Argyle Village
Argyle Town
Blanchard Town
Blanchardville Village
Darlington City
Darlington Town
Fayette Town
Gratiot Village
Gratiot Town
Kendall Town
Lamont Town
Monticello Town
Seymour Town
Shullsburg City
Shullsburg Town
South Wayne Village
Wayne Town
White Oak Springs Town
Willow Springs Town
Wiota Town
Elcho
County—Langlade
Parts:
Ainsworth Town
Elcho Town
Parrish Town
Summit Town
Upham Town
County—Oneida
Parts:
Enterprise Town
Schoepke Town
Frederic/Luck
County—Polk
Parts:
Bone Lake Town
Clam Falls Town
Frederic Village
Georgetown Town
Laketown Town
Lorain Town
Luck Town
Luck Village
McKinley Town
West Sweden Town
Galesville/Trempealeau
County—Jackson
Parts:
Melrose Town
Melrose Village
North Bend Town
County—Trempealeau
Parts:
Arcadia City
Arcadia Town
Caledonia Town
Dodge Town
Ettrick Town
Ettrick Village
Gale Town
Galesville City
Trempealeau Town
Trempealeau Village
Hayward/Radisson
County—Bayfield
Parts:
Barnes Town
Cable Town
Drummond Town
Grand View Town
Namakagon Town
County—Sawyer
Parts:
Bass Lake Town
Couderay Village
Couderay Town
Draper Town
Edgewater Town
Exeland Village
Hayward City
Hayward Town
Hunter Town
Lenroot Town
Meadowbrook Town
Meteor Town
Ojibwa Town
Radisson Village
Radisson Town
Round Lake Town
Sand Lake Town
Spider Lake Town
Weirgor Town
Winter Village
Winter Town
County—Washburn
Parts:
Bass Lake Town
Stinnett Town
Stone Lake Town
Hillsboro
County—Juneau
Parts:
Union Center Village
Wonewoc Village
Wonewoc Town
County—Monroe
Parts:
Glendale Town
Kendall Village
Sheldon Town
Wellington Town
County—Richland
Parts:
Bloom Town
Cazenovia Village
Henrietta Town
Westford Town
Yuba Village
County—Sauk
Parts:
Woodland Town
County—Vernon
Parts:
Forest Town
Greenwood Town
Hillsboro City
Hillsboro Town
Ontario Village
Union Town
Whitestown Town
Inner City South
County—Milwaukee
Parts:
C.T. 155–159
C.T. 162–169
C.T. 174–177
Inner City West
County—Milwaukee
Parts:

PRIMARY MEDICAL CARE: Wisconsin
Service Area Listing

Service Area Name

C.T. 62
C.T. 87–90
C.T. 96–100
C.T. 119–123
C.T. 133–138
C.T. 148–149
Juneautown
County—Milwaukee
Parts:
C.T. 108
C.T. 110–113
Kenosha
County—Kenosha
Parts:
C.T. 7–12
C.T. 16
Kewaunee City/Algoma
County—Kewaunee
Parts:
Ahnapee Town
Algoma City
Carlton Town
Casco Town
Casco Village
Kewaunee City
Lincoln Town
Pierce Town
West Kewaunee Town
Land O'Lakes/Presque Isle
County—Vilas
Parts:
Land O'Lakes Town
Presque Isle Town
Winchester Town
Markesan/Kingston
County—Green Lake
Parts:
Kingston Town
Kingston Village
Mackford Town
Manchester Town
Markesan City
Marquette Town
Marquette Village
Minong/Solon Springs
County—Douglas
Parts:
Bennett Town
Dairyland Town
Gordon Town
Highland Town
Oakland Town
Solon Springs Village
Solon Springs Town
Wascott Town
County—Washburn
Parts:
Brooklyn Town
Chicog Town
Frog Creek Town
Gull Lake Town
Minong Village
Minong Town
Mountain/White Lake
County—Langlade
Parts:
Evergreen Town
Langlade Town
White Lake Village
Wolf River Town
County—Oconto
Parts:

PRIMARY MEDICAL CARE: Wisconsin
Service Area Listing

Service Area Name

Armstrong Town
Bagley Town
Brazeau Town
Breed Town
Doty Town
Lakewood Town
Riverview Town
Townsend Town
Oconto/Oconto Falls
County—Oconto
Parts:
Abrams Town
Gillett City
Gillett Town
How Town
Lena Town
Lena Village
Little River Town
Maple Valley Town
Morgan Town
Oconto City
Oconto Falls City
Oconto Falls Town
Oconto Town
Pensaukee Town
Spruce Town
Stiles Town
Suring Village
Underhill Town
County—Shawano
Parts:
Green Valley Town
Pulaski
County—Brown
Parts:
Pittsfield Town
Pulaski Village
County—Oconto
Parts:
Chase Town
County—Shawano
Parts:
Angelica Town
Maple Grove Town
Sister Bay/Washington Island
County—Door
Parts:
Baileys Harbor Town
Ephraim Village
Gibraltar Town
Liberty Grove Town
Sister Bay Village
Washington Town
Sparta
County—Monroe
Parts:
Angelo Town
Cashton Village
Jefferson Town
Lafayette Town
Leon Town
Little Falls Town
Melvina Village
New Lyme Town
Norwalk Village
Portland Town
Ridgeville Town
Sparta Town
Sparta City
Wells Town
Spring Green/Plain
County—Richland

PRIMARY MEDICAL CARE: Wisconsin
Service Area Listing

Service Area Name

Parts:
Buena Vista Town
Lone Rock Village
County—Sauk
Parts:
Bear Creek Town
Franklin Town
Honey Creek Town
Plain Village
Spring Green Village
Spring Green Town
Troy Town
Tigerton/Birnamwood
County—Marathon
Parts:
Elderon Town
Elderon Village
Franzen Town
Hatley Village
Norrie Town
Plover Town
County—Shawano
Parts:
Almon Town
Aniwa Village
Aniwa Town
Birnamwood Village
Birnamwood Town
Bowler Village
Eland Village
Fairbanks Town
Germania Town
Hutchins Town
Mattoon Village
Morris Town
Tigerton Village
Wittenberg Village
Wittenberg Town
County—Waupaca
Parts:
Big Falls Village
Harrison Town
Wyoming Town
W. Marinette
County—Marinette
Parts:
Amberg Town
Athelstane Town
Beaver Town
Beecher Town
Coleman Village
Crivitz Village
Dunbar Town
Goodman Town
Lake Town
Middle Inlet Town
Niagara Town
Pembine Town
Pound Village
Pound Town
Silver Cliff Town
Stephenson Town
Wausaukee Village
Wausaukee Town

PRIMARY MEDICAL CARE: Wisconsin
Population Group Listing

Population Group

Am In—Bad River Tribe
County—Ashland
Parts:

PRIMARY MEDICAL CARE: Wisconsin
Population Group Listing

Population Group

Sanborn Town
Am In—Oneida Nation
County—Brown
Parts:
Hobart Town
County—Outagamie
Parts:
Oneida Town
Am In—Stockbridge-Munsee Tribe
County—Shawano
Parts:
Bartelme Town
Red Springs Town
Amer Ind—Ho-Chunk (S)
County—Columbia
Parts:
Arlington Town
Arlington Villabe
Columbus City
Columbus Town
Hampden Town
Leeds Town
Lodi City
Lodi Town
Newport Town
West Point Town
Wisconsin Dells City
Amer Ind—Ho-Chunk(S)
County—Marathon
Parts:
C.T. 3
C.T. 8–10
C.T. 11.02–11.04
C.T. 12.01–12.02
C.T. 13–23
Amer Ind/Ho-Chunk(S)
County—Crawford
Parts:
Bell Center Village
Bridgeport Town
Clayton Town
De Soto Villabe
Eastman Town
Eastman Village
Ferryville Village
Freeman Town
Gays Mills Village
Lynxville Village
Mount Steriling Village
Prairie Du Chien City
Prairie Du Chien Town
Seneca Town
Soldiers Grove Village
Utica Town
Amer Ind/Ho-Chunk(S)
County—Dane
Parts:
Dane County
Amer Ind/Ho-Chunk(S)
County—Eau Claire
Parts:
Altoona City
Brunswick Town
Drammen Town
Eau Claire City
Fall Creek Village
Lincoln Town
Ludington Town
Pleasant Valley Town
Seymour Town
Union Town
Washington Town

PRIMARY MEDICAL CARE: Wisconsin
Population Group Listing

Population Group

Wilson Town
Amer Ind/Ho-Chunk(S)
County—Jackson
Parts:
Adams Town
Albion Town
Alma Center Village
Alma Town
Bear Bluff Town
Black River Fall Town
Brockway Town
City Point Town
Curran Town
Franklin Town
Garden Valley Town
Hixton Town
Hixton Village
Irving Town
Knapp Town
Komensky Town
Manchester Town
Merrillan Village
Millston Town
Springfield Town
Taylor Village
Amer Ind/Ho-Chunk(S)
County—Juneau
Parts:
Armenia Town
Camp Douglas Village
Clearfield Town
Cutler Town
Elroy City
Finley Town
Fountain Town
Germantown Town
Hustler Village
Kildare Town
Kingston Town
Lemonweir Town
Lindina Town
Lisbon Town
Lyndon Town
Lyndon Station Village
Marion Town
Mauston City
Necedah Town
Necedah Village
New Lisbon City
Orange Town
Plymouth Town
Seven Mile Creek Town
Summit Town
Amer Ind/Ho-Chunk(S)
County—La Crosse
Parts:
Bangor Town
Bangor Village
Barre Town
Burns Town
Campbell Town
Farmington Town
Greenfield Town
Hamilton Town
Holland Town
Holmen Village
La Crosse City
Medary Town
Onalaska City
Onalaska Town
Rockland Village
Shelby Town

PRIMARY MEDICAL CARE: Wisconsin
Population Group Listing

Population Group

West Salem Village
Amer Ind/Ho-Chunk(S)
County—Monroe
Parts:
Adrian Town
Byron Town
Clifton Town
Grant Town
Greenfield Town
La Grange Town
Lincoln Town
Oakdale Town
Oakdale Village
Scott Town
Tomah City
Tomah Town
Warrens Village
Wilton Town
Wilton Village
Wyeville Village
Amer Ind/Ho-Chunk(S)
County—Sauk
Parts:
Baraboo City
Baraboo Town
Cazenovia Village
Dellona Town
Delton Town
Excelsior Town
Fairfield Town
Freedom Town
Greenfield Town
Ironton Town
Ironton Village
La Valle Village
La Valle Town
Lake Delton Village
Lime Ridge Village
Loganville Village
Merrimac Town
Merrimac Village
North Freedom Village
Prairie Du Sac Town
Prairie Du Sac Village
Reedsburg City
Reedsburg Town
Rock Springs Village
Sauk City Village
Sumpter Town
Washington Town
West Baraboo Village
Westfield Town
Winfield Town
Wisconsin Dells City
Amer Ind/Ho-Chunk(S)
County—Shawano
Parts:
Belle Plaine Town
Bonduel Village
Cecil Village
Gresham Village
Hartland Town
Herman Town
Lessor Town
Navarino Town
Richmond Town
Seneca Town
Shawano City
Washington Town
Waukechon Town
Westcott Town
Amer Ind/Ho-Chunk(S)

PRIMARY MEDICAL CARE: Wisconsin
Population Group Listing

Population Group

County—Vernon
Parts:
Bergen Town
Clinton Town
De Soto Village
Franklin Town
Genoa Town
Genoa Village
Harmony Town
Jefferson Town
Kickapoo Town
La Farge Village
Liberty Town
Readstown Village
Stark Town
Sterling Town
Stoddard Village
Viola Village
Viroqua City
Viroqua Town
Webster Town
Wheatland Town
Amer Ind/Ho-Chunk(S)
County—Wood
Parts:
Wood County
Low Inc—Augusta/Osseo
County—Eau Claire
Parts:
Augusta City
Bridge Creek Town
Clear Creek Town
Fairchild Town
Fairchild Vil
Otter Creek Town
County—Jackson
Parts:
Cleveland Town
Garfield Town
Northfield Town
County—Trempealeau
Parts:
Hale Town
Osseo City
Strum Vil
Sumner Town
Unity Town
Low Inc—Boscobel
County—Crawford
Parts:
Haney Town
Marietta Town
Scott Town
Steuben Vil
Wauzeka Town
Wauzeka Vil
County—Grant
Parts:
Bagley Vil
Blue River Vil
Boscobel City
Boscobel Town
Castle Rock Town
Hickory Grove Town
Marion Town
Millville Town
Mount Hope Town
Mount Ida Town
Muscoda Town
Muscoda Vil
Patch Grove Vil
Patch Grove Town

PRIMARY MEDICAL CARE: Wisconsin
Population Group Listing

Population Group

Watterstown Town
Woodman Town
Woodman Vil
Wyalusing Town
Low Inc—City Of Wausau
County—Marathon
Parts:
C.T. 1–2
C.T. 4–5
C.T. 6.01–6.02
C.T. 7
Low Inc—Durand
County—Buffalo
Parts:
Maxville Twn
Nelson Twn
Nelson Vil
County—Dunn
Parts:
Dunn Twn
Eau Galle Twn
Peru Twn
Rock Creek Twn
Spring Brook Twn
Weston Twn
County—Pepin
Parts:
Durand City
Durand Twn
Frankfort Twn
Lima Twn
Pepin Twn
Pepin Vil
Stockholm Vil
Stockholm Twn
Waterville Twn
Waubeek Twn
County—Pierce
Parts:
El Paso Twn
Elmwood Vil
Gilman Twn
Maiden Rock Twn
Maiden Rock Vil
Plum City Vil
Rock Elm Twn
Salem Twn
Spring Lake Twn
Spring Valley Vil
Union Twn
Low Inc—E Marinette/S Menominee (MI/WI
County—Marinette
Parts:
Grover Town
Marinette City
Peshtigo City
Pestigo Town
Porterfield Town
Wagner Town
Low Inc—Inner City North (Milwaukee)
County—Milwaukee
Parts:
C.T. 44
C.T. 66–72
C.T. 79–86
C.T. 101–107
C.T. 114–118
C.T. 139–142
C.T. 145–147
C.T. 151
Low Inc—Ironwood/Hurley (MI/WI)
County—Iron

PRIMARY MEDICAL CARE: Wisconsin
Population Group Listing

Population Group

Parts:
Anderson Town
Carey Town
Gurney Town
Hurley City
Kimball Town
Knight Town
Mercer Town
Montreal City
Oma Town
Pence Town
Saxon Town
Low Inc—Lancaster/Fennimore
County—Grant
Parts:
Beetown Town
Bloomington Town
Bloomington Vil
Cassville Vil
Cassville Town
Fennimore Town
Fennimore City
Glen Haven Town
Lancaster City
Liberty Town
Little Grant Town
Montfort Vil
North Lancaster Town
Potosi Town
Potosi Vil
South Lancaster Town
Waterloo Town
Wingville Town
Low Inc—Menominee Co
County—Menominee
Parts:
Low Income
Low Inc—Mondovi
County—Buffalo
Parts:
Alma City
Alma Town
Belvidere Town
Buffalo City
Canton Town
Cochrane Vil
Dover Town
Gilmanton Town
Lincoln Town
Modena Town
Mondovi Town
Mondovi City
Naples Town
County—Pepin
Parts:
Albany Town
Low Inc—Platteville/Cuba City
County—Grant
Parts:
Clifton Town
Cuba City City
Dickeyville Village
Ellenboro Town
Harrison Town
Hazel Green Town
Hazel Green Village
Jamestown Town
Lima Town
Livingston Village
Paris Town
Platteville City
Platteville Town

PRIMARY MEDICAL CARE: Wisconsin
Population Group Listing

Population Group

Smelser Town
County—Iowa
Parts:
Mifflin Town
Rewey Vil
County—Lafayette
Parts:
Belmont Town
Belmont Vil
Benton Town
Benton Vil
Elk Grove Town
New Diggings Town
Low Inc—Portage/Pardeeville
County—Columbia
Parts:
Caledonia Twn
Cambria Vil
Courtland Twn
Dekorra Twn
Doylestown Vil
Fall River Vil
Fort Winnebago Twn
Fountain Prairie Twn
Friesland Vil
Lewiston Twn
Lowville Twn
Marcellon Twn
Otsego Twn
Pacific Twn
Pardeeville Vil
Portage City
Poynette Vil
Randolph Twn
Randolph Vil
Rio Vil
Scott Twn
Springvale Twn
Wyocena Vil
Wyocena Twn
Low Inc—Rusk Co
County—Rusk
Parts:
Low Income
Low Inc—Spooner/Shell Lake
County—Washburn
Parts:
Barronett Town
Bashaw Town
Beaver Brook Town
Birchwood Town
Birchwood Vil
Casey Town
Crystal Town
Evergreen Town
Long Lake Town
Madge Town
Sarona Town
Shell Lake City
Spooner City
Spooner Town
Springbrook Town
Trego Town
Low Inc—Sturgeon Bay
County—Door
Parts:
Brussels Twn
Claybanks Twn
Egg Harbor Twn
Egg Harbor Vil
Forestville Twn
Forestville Vil

PRIMARY MEDICAL CARE: Wisconsin
Population Group Listing

Population Group

Gardner Twn
Jacksonport Twn
Nasewaupee Twn
Sevastopol Twn
Sturgeon Bay City
Sturgeon Bay Twn
Union Twn
Low Inc—Tomahawk
County—Lincoln
Parts:
Bradley Town
Harrison Town
King Town
Skanawan Town
Somo Town
Tomahawk City
Tomahawk Town
Wilson Town
County—Oneida
Parts:
Little Rice Town
Lynne Town
Nokomis Town

PRIMARY MEDICAL CARE: Wisconsin
Facility Listing

Facility Name

Columbia Maximum Security Inst
County—Columbia
Dodge Corr Inst
County—Dodge
Fox Lake Medium Security Inst
County—Dodge
FCI Oxford
County—Adams
Green Bay Maximum Security Inst
County—Brown
Kettle Moraine Medium Security Inst
County—Sheboygan
Oshkosh Medium Security Inst
County—Winnebago
Racine Medium Security Inst
County—Racine
Waupun Maximum Security Inst
County—Dodge

PRIMARY MEDICAL CARE: Wyoming
County Listing

County Name

*Big Horn
*Campbell
Service Area: Wright
*Carbon (g)
Facility: Wyoming State Penitentiary
*Converse
*Crook
*Fremont
Service Area: Dubois
Service Area: Sweetwater
*Hot Springs
Laramie
Service Area: Pine Bluffs
*Lincoln
Service Area: Kemmerer/Cokeville
Natrona
Service Area: Midwest/Edgerton
Population Group: Low Income—Casper
*Niobrara
*Park
Service Area: Gardiner/Yellowstone (MT/WY)

PRIMARY MEDICAL CARE: Wyoming
County Listing

County Name

*Platte
Service Area: Chugwater
Service Area: Glendo
Service Area: Guernsey
*Sublette
*Sweetwater
*Teton
Service Area: Gardiner/Yellowstone (MT/WY)
*Uinta
*Washakie

PRIMARY MEDICAL CARE: Wyoming
Service Area Listing

Service Area Name

Chugwater
County—Platte
Parts:
Chugwater Division
Dubois
County—Fremont
Parts:
Dubois Division
Gardiner/Yellowstone (MT/WY)
County—Park
Parts:
Yellowstone National Park Divisi
County—Teton
Parts:
Yellowstone National Park Divisi
Glendo
County—Platte
Parts:
Glendo Division
Guernsey
County—Platte
Parts:
Guernsey Division
Kemmerer/Cokeville
County—Lincoln
Parts:
Kemmerer East Division
Kemmerer West Division
Midwest/Edgerton
County—Natrona
Parts:
Casper North Division
Pine Bluffs
County—Laramie
Parts:
Pine Bluffs Division
Sweetwater
County—Fremont
Parts:
Sweetwater Division
Wright
County—Campbell
Parts:
Gillette South Division

PRIMARY MEDICAL CARE: Wyoming
Population Group Listing

Population Group

Low Income—Casper
County—Natrona
Parts:
C.T. 1–2
C.T. 4
C.T. 7–8
C.T. 8
C.T. 11–12

PRIMARY MEDICAL CARE: Wyoming
Facility Listing

Facility Name
Wyoming State Penitentiary 3
County—Carbon

PRIMARY MEDICAL CARE: American Samoa
County Listing

County Name
*Eastern
Service Area: Terr. Of American Samoa
*Manua
Service Area: Terr. Of American Samoa
*Rose Island
Service Area: Terr. Of American Samoa
*Swains Island
Service Area: Terr. Of American Samoa
*Western
Service Area: Terr. Of American Samoa

PRIMARY MEDICAL CARE: American Samoa
Service Area Listing

Service Area Name
Terr. Of American Samoa
County—Eastern
County—Manua
County—Rose Island
County—Swains Island
County—Western

PRIMARY MEDICAL CARE: Fed Ste Micronesia
County Listing

County Name
*Chuuk State
*Kosrae State
*Pohnpei State
*Yap State

PRIMARY MEDICAL CARE: Guam
County Listing

County Name
*Guam

PRIMARY MEDICAL CARE: N. Mariana Islands
County Listing

County Name
*Northern Islands
Service Area: Commonwealth N. Mariana Islands
*Rota
Service Area: Commonwealth N. Mariana Islands
*Saipan
Service Area: Commonwealth N. Mariana Islands
*Tinian
Service Area: Commonwealth N. Mariana Islands

PRIMARY MEDICAL CARE: N. Mariana Islands
Service Area Listing

Service Area Name
Commonwealth N. Mariana Islands
County—Northern Islands
County—Rota

PRIMARY MEDICAL CARE: N. Mariana Islands
Service Area Listing

Service Area Name
County—Saipan
County—Tinian

PRIMARY MEDICAL CARE: Republic of Palau
County Listing

County Name
*Republic Of Palau

PRIMARY MEDICAL CARE: Puerto Rico
County Listing

County Name
*Adjuntas
Population Group: Low Inc—RSA 9
Aguada
Population Group: Low Inc—RSA 1
Aguadilla
Population Group: Low Inc—RSA 6
*Aguas Buenas
Service Area: Caguas (Sub-Region I)
*Aibonito
Population Group: Low Inc—RSA 21
Anasco
Population Group: Low Inc—RSA 1
*Arecibo
Population Group: Low Inc—RSA 9
*Arroyo
Population Group: Low Inc—RSA 19
*Barceloneta
Population Group: Low Inc—RSA 9
*Barranquitas
Population Group: RSA 8
*Cabo Rojo
Population Group: Low Inc—RSA 3
*Caguas
Service Area: Caguas (Sub-Region I)
*Camuy
Population Group: Low Inc—RSA 4
*Canovanas
Population Group: Low Inc—RSA 14
*Catano
Population Group: Low Inc—RSA 9
*Cayey
Population Group: Low Inc—RSA 21
*Ceiba
Population Group: Low Inc—RSA 14
*Ciales
Population Group: Low Inc—RSA 24
*Cidra
Service Area: Caguas (Sub-Region I)
*Coamo
Population Group: Low Inc—RSA 20
*Comerio
Population Group: RSA 8
*Corozal
Population Group: RSA 8
*Culebra
Population Group: Low Inc—RSA 14
*Dorado
Population Group: Low Inc—RSA 9
*Fajardo
Population Group: Low Inc—RSA 14
*Florida
Population Group: Low Inc—RSA 9
*Guanica
Population Group: Low Inc—RSA 2
*Guayama
Population Group: Low Inc—RSA 19
Guayanilla

PRIMARY MEDICAL CARE: Puerto Rico
County Listing

County Name
Population Group: Low Inc—RSA 2
*Gurabo
Service Area: Caguas (Sub-Region I)
*Hatillo
Population Group: Low Inc—RSA 4
Hormigueros
Population Group: Low Inc—RSA 3
*Humacao
Population Group: Low Inc—RSA 17
*Isabela
Population Group: Low Inc—RSA 6
*Jayuya
Population Group: Low Inc—RSA 9
Juana Diaz
Population Group: Low Inc—RSA 20
*Juncos
Service Area: Caguas (Sub-Region I)
*Lajas
Population Group: Low Inc—RSA 3
*Lares
Population Group: Low Inc—RSA 4
*Las Marias
Population Group: Low Inc—RSA 4
*Las Peidras
Population Group: Low Inc—RSA 17
*Loiza
Population Group: Low Inc—RSA 14
*Luquillo
Population Group: Low Inc—RSA 14
*Manati
Population Group: Low Inc—RSA 24
*Maricao
Population Group: Low Inc—RSA 4
*Maunabo
Population Group: Low Inc—RSA 19
Mayaguez
Population Group: Low Inc—RSA 1
Moca
Population Group: Low Inc—RSA 6
*Morovis
Population Group: Low Inc—RSA 24
*Naguabo
Population Group: Low Inc—RSA 17
*Naranjito
Population Group: RSA 8
*Orocovis
Population Group: RSA 8
*Patillas
Population Group: Low Inc—RSA 19
Penuelas
Population Group: Low Inc—RSA 2
Ponce
Population Group: Low Inc—SW Ponce
Facility: Las Cucharas Corr Inst
*Quebradillas
Population Group: Low Inc—RSA 6
*Rincon
Population Group: Low Inc—RSA 1
*Rio Grande
Population Group: Low Inc—RSA 14
Sabana Grande
Population Group: Low Inc—RSA 2
*Salinas
Population Group: Low Inc—RSA 20
San German
Population Group: Low Inc—RSA 3
*San Lorenzo
Population Group: Low Inc—RSA 17
*San Sebastian
Population Group: Low Inc—RSA 4
*Santa Isabel
Population Group: Low Inc—RSA 20

PRIMARY MEDICAL CARE: Puerto Rico
County Listing

County Name

*Toa Alta
Population Group: Low Inc—RSA 9
*Toa Baja
Population Group: Low Inc—RSA 9
*Utuado
Population Group: Low Inc—RSA 9
*Vega Alta
Population Group: Low Inc—RSA 23
*Vega Baja
Population Group: Low Inc—RSA 23
*Vieques
Population Group: Low Inc—RSA 14
Villalba
Population Group: Low Inc—RSA 20
*Yabucoa
Population Group: Low Inc—RSA 17
*Yauco
Population Group: Low Inc—RSA 2

PRIMARY MEDICAL CARE: Puerto Rico
Service Area Listing

Service Area Name

Caguas (Sub-Region I)
County—Aguas Buenas
County—Caguas
County—Cidra
County—Gurabo
County—Juncos

PRIMARY MEDICAL CARE: Puerto Rico
Population Group Listing

Population Group

Low Inc—RSA 1
County—Aguada
Parts:
Aguada
County—Anasco
Parts:
Anasco
County—Mayaguez
Parts:
Mayaguez
County—Rincon
Parts:
Rincon
Low Inc—RSA 14
County—Canovanas
Parts:
Canovanas
County—Ceiba
Parts:
Ceiba
County—Culebra
Parts:
Culebra
County—Fajardo
Parts:
Fajardo
County—Loiza
Parts:
Loiza
County—Luquillo
Parts:
Luquillo
County—Rio Grande
Parts:
Rio Grande
County—Vieques
Parts:
Vieques

PRIMARY MEDICAL CARE: Puerto Rico
Population Group Listing

Population Group

Low Inc—RSA 17
County—Humacao
Parts:
Humacao
County—Las Peidras
Parts:
Las Piedras
County—Naguabo
Parts:
Naguabo
County—San Lorenzo
Parts:
San Lorenzo
County—Yabucoa
Parts:
Yabucoa
Low Inc—RSA 19
County—Arroyo
Parts:
Arroyo
County—Guayama
Parts:
Guayama
County—Maunabo
Parts:
Maunabo
County—Patillas
Parts:
Patillas
Low Inc—RSA 2
County—Guanica
Parts:
Guanica
County—Guayanilla
Parts:
Guayanilla
County—Penuelas
Parts:
Penuelas
County—Sabana Grande
Parts:
Sabana Grande
County—Yauco
Parts:
Yauco
Low Inc—RSA 20
County—Coamo
Parts:
Coamo
County—Juana Diaz
Parts:
Juana Diaz
County—Salinas
Parts:
Salinas
County—Santa Isabel
Parts:
Santa Isabel
County—Villalba
Parts:
Villalba
Low Inc—RSA 21
County—Aibonito
Parts:
Aibonita
County—Cayey
Parts:
Cayey
Low Inc—RSA 23
County—Vega Alta
Parts:
Low Income

PRIMARY MEDICAL CARE: Puerto Rico
Population Group Listing

Population Group

County—Vega Baja
Parts:
Low Income
Low Inc—RSA 24
County—Ciales
Parts:
Ciales
County—Manati
Parts:
Manati
County—Morovis
Parts:
Morovis
Low Inc—RSA 3
County—Cabo Rojo
Parts:
Cabo Rojo
County—Hormigueros
Parts:
Hormiqueros
County—Lajas
Parts:
Lajas
County—San German
Parts:
San German
Low Inc—RSA 4
County—Camuy
Parts:
Camuy
County—Hatillo
Parts:
Hatillo
County—Lares
Parts:
Lares
County—Las Marias
Parts:
Las Marias
County—Maricao
Parts:
Maricao
County—San Sebastian
Parts:
San Sebastian
Low Inc—RSA 6
County—Aguadilla
Parts:
Aguadilla
County—Isabela
Parts:
Isabela
County—Moca
Parts:
Moca
County—Quebradillas
Parts:
Quebradillas
Low Inc—RSA 9
County—Catano
Parts:
Catano
County—Dorado
Parts:
Dorado
County—Toa Alta
Parts:
Toa Alta
County—Toa Baja
Parts:
Toa Baja
Low Inc—RSA 9

PRIMARY MEDICAL CARE: Puerto Rico
Population Group Listing

Population Group

County—Adjuntas
Parts:
Adjuntas
County—Arecibo
Parts:
Arecibo
County—Barceloneta
Parts:
Barceloneta
County—Florida
Parts:
Florida
County—Jayuya
Parts:
Jayuya
County—Utuado
Parts:
Utuado
Low Inc—SW Ponce
County—Ponce
Parts:
C.T. 714.01–714.02
C.T. 715
C.T. 716.01–716.02
C.T. 719
C.T. 721.01–721.02
C.T. 721.99
C.T. 730.01–730.07
RSA 8
County—Barranquitas
Parts:
Barranquitas
County—Comerio
Parts:
Comerio
County—Corozal
Parts:
Corozal
County—Naranjito
Parts:
Naranjito
County—Orocovis
Parts:
Orocovis

PRIMARY MEDICAL CARE: Puerto Rico
Facility Listing

Facility Name

Las Cucharas Corr Inst
County—Ponce

PRIMARY MEDICAL CARE: Virgin Islands
County Listing

County Name

*St. Croix
Service Area: Fredericksted
*St. John Island
Population Group: Low Inc—St. Thomas/St. John
*St. Thomas
Population Group: Low Inc—St. Thomas/St. John

PRIMARY MEDICAL CARE: Virgin Islands
Service Area Listing

Service Area Name

Fredericksted
County—St. Croix
Parts:

PRIMARY MEDICAL CARE: Virgin Islands
Service Area Listing

Service Area Name

Fredericksted
Northwest
Southwest

PRIMARY MEDICAL CARE: Virgin Islands
Population Group Listing

Population Group

Low Inc—St. Thomas/St. John
County—St. John Island
Parts:
Low Income
County—St. Thomas
Parts:
Low Income

MENTAL HEALTH: Alabama
County Listing

County Name

Autauga
Service Area: Catchment Area M–14
Baldwin
Service Area: Catchment Area M–21
*Barbour
Service Area: Catchment Area M–19
*Bibb
Service Area: Catchment Area M–8
*Bullock
Service Area: Catchment Area M–15
*Butler
Service Area: Catchment Area M–18
Calhoun
Service Area: Catchment Area M–7
*Chambers
Service Area: Catchment Area M–12
*Cherokee
Service Area: Catchment Area M–6
*Chilton
Service Area: Catchment Area M–11
*Choctaw
Service Area: Catchment Area M–10
*Clarke
Service Area: Catchment Area M–17
*Clay
Service Area: Catchment Area M–9
*Cleburne
Service Area: Catchment Area M–7
*Coffee
Service Area: Catchment Area M–18
Colbert
Service Area: Catchment Area M–1
*Conecuh
Service Area: Catchment Area M–17
*Coosa
Service Area: Catchment Area M–9
*Covington
Service Area: Catchment Area M–18
*Crenshaw
Service Area: Catchment Area M–18
*Cullman
Service Area: Catchment Area M–22
Dale
Service Area: Catchment Area M–19
*Dallas
Service Area: Catchment Area M–13
*Dekalb
Service Area: Catchment Area M–6
Elmore
Service Area: Catchment Area M–14
*Escambia
Service Area: Catchment Area M–17

MENTAL HEALTH: Alabama
County Listing

County Name

Etowah
Service Area: Catchment Area M–6
*Fayette
Service Area: Catchment Area M–4
*Franklin
Service Area: Catchment Area M–1
*Geneva
Service Area: Catchment Area M–19
*Greene
Service Area: Catchment Area M–10
*Hale
Service Area: Catchment Area M–10
*Henry
Service Area: Catchment Area M–19
*Houston
Service Area: Catchment Area M–19
*Jackson
Service Area: Catchment Area M–20
*Lamar
Service Area: Catchment Area M–4
Lauderdale
Service Area: Catchment Area M–1
Lee
Service Area: Catchment Area M–12
*Lowndes
Service Area: Catchment Area M–14
*Macon
Service Area: Catchment Area M–15
*Marengo
Service Area: Catchment Area M–10
*Marion
Service Area: Catchment Area M–4
*Marshall
Service Area: Catchment Area M–20
Mobile
Service Area: Catchment Area M–16
*Monroe
Service Area: Catchment Area M–17
Montgomery
Service Area: Catchment Area M–14
*Perry
Service Area: Catchment Area M–13
*Pickens
Service Area: Catchment Area M–8
*Pike
Service Area: Catchment Area M–15
*Randolph
Service Area: Catchment Area M–9
Russell
Service Area: Catchment Area M–12
Shelby
Service Area: Catchment Area M–11
*Sumter
Service Area: Catchment Area M–10
*Talladega
Service Area: Catchment Area M–9
*Tallapoosa
Service Area: Catchment Area M–12
Tuscaloosa
Service Area: Catchment Area M–8
Facility: M. Starke Harper Geriatric Psych Center
*Walker
Service Area: Catchment Area M–4
*Washington
Service Area: Catchment Area M–16
*Wilcox
Service Area: Catchment Area M–13
*Winston
Service Area: Catchment Area M–4

MENTAL HEALTH: Alabama
Service Area Listing

Service Area Name
Catchment Area M–1
County—Colbert
County—Franklin
County—Lauderdale
Catchment Area M–10
County—Choctaw
County—Greene
County—Hale
County—Marengo
County—Sumter
Catchment Area M–11
County—Chilton
County—Shelby
Catchment Area M–12
County—Chambers
County—Lee
County—Russell
County—Tallapoosa
Catchment Area M–13
County—Dallas
County—Perry
County—Wilcox
Catchment Area M–14
County—Autauga
County—Elmore
County—Lowndes
County—Montgomery
Catchment Area M–15
County—Bullock
County—Macon
County—Pike
Catchment Area M–16
County—Mobile
County—Washington
Catchment Area M–17
County—Clarke
County—Conecuh
County—Escambia
County—Monroe
Catchment Area M–18
County—Butler
County—Coffee
County—Covington
County—Crenshaw
Catchment Area M–19
County—Barbour
County—Dale
County—Geneva
County—Henry
County—Houston
Catchment Area M–20
County—Jackson
County—Marshall
Catchment Area M–21
County—Baldwin
Catchment Area M–22
County—Cullman
Catchment Area M–4
County—Fayette
County—Lamar
County—Marion
County—Walker
County—Winston
Catchment Area M–6
County—Cherokee
County—Dekalb
County—Etowah
Catchment Area M–7
County—Calhoun
County—Cleburne
Catchment Area M–8
County—Bibb

MENTAL HEALTH: Alabama
Service Area Listing

Service Area Name
County—Pickens
County—Tuscaloosa
Catchment Area M–9
County—Clay
County—Coosa
County—Randolph
County—Talladega

MENTAL HEALTH: Alabama
Facility Listing

Facility Name
M. Starke Harper Geriatric Psych Center
County—Tuscaloosa

MENTAL HEALTH: Alaska
Census Area Listing

Census Area Name
*Aleutians East Borough
*Aleutians West Area
*Bethel Area
*Bristol Bay Borough
*Denali Borough
*Dillingham Area
*Haines Borough
*Ketchikan Gateway Borough
*Lake And Peninsula Borough
*Matanuska-Susitna Borough
*Nome Census Area
Service Area: Nome
*North Slope Borough
*Northwest Arctic Borough
*Prince Of Wales-Outer Ket
*Skagway-Hoonah-Angoon Borough
*Southeast-Fairbanks Area
*Valdez-Cordova Area
*Wade-Hampton Area
*Wrangell-Petersburg Area
*Yakutat Borough
*Yukon-Koyukuk Area

MENTAL HEALTH: Alaska
Service Area Listing

Service Area Name
Nome
Census Area—Nome Census Area

MENTAL HEALTH: Arizona
County Listing

County Name
*Apache
Service Area: N. Arizona Mental Hlth Catch Area
Coconino
Service Area: N. Arizona Mental Hlth Catch Area
*Gila
Service Area: Pinal/Gila Catchment Area
*La Paz
Service Area: Southwest Az Catchment Area
Maricopa
Facility: Maricopa Co Jails
Mohave
Service Area: N. Arizona Mental Hlth Catch Area
*Navajo
Service Area: N. Arizona Mental Hlth Catch Area

MENTAL HEALTH: Arizona
County Listing

County Name
Pinal
Service Area: Pinal/Gila Catchment Area
*Yavapai
Service Area: N. Arizona Mental Hlth Catch Area
*Yuma
Service Area: Southwest Az Catchment Area

MENTAL HEALTH: Arizona
Service Area Listing

Service Area Name
N. Arizona Mental Hlth Catch Area
County—Apache
County—Coconino
County—Mohave
County—Navajo
County—Yavapai
Pinal/Gila Catchment Area
County—Gila
County—Pinal
Southwest Az Catchment Area
County—La Paz
County—Yuma

MENTAL HEALTH: Arizona
Facility Listing

Facility Name
Maricopa Co Jails
County—Maricopa

MENTAL HEALTH: Arkansas
County Listing

County Name
*Arkansas
Service Area: Pine Bluff C.A.
*Ashley
Service Area: Monticello C.A.
*Baxter
Service Area: Mountain Home C.A.
*Boone
Service Area: Mountain Home C.A.
*Bradley
Service Area: Monticello C.A.
*Calhoun
Service Area: El Dorado
*Carroll
*Chicot
Service Area: Monticello C.A.
*Clark
Service Area: Hot Springs C.A.
*Clay
Service Area: Jonesboro
*Cleburne
Service Area: Batesville
*Cleveland
Service Area: Pine Bluff C.A.
*Columbia
Service Area: El Dorado
*Conway
Service Area: Russellville C.A.
Craighead
Service Area: Jonesboro
Crawford
Service Area: Fort Smith C.A.
Crittenden
Service Area: Helena
*Cross
Service Area: Helena

MENTAL HEALTH: Arkansas
County Listing

County Name

*Dallas
Service Area: El Dorado
*Desha
Service Area: Monticello C.A.
*Drew
Service Area: Monticello C.A.
*Franklin
Service Area: Fort Smith C.A.
*Fulton
Service Area: Batesville
*Garland
Service Area: Hot Springs C.A.
*Grant
Service Area: Pine Bluff C.A.
*Greene
Service Area: Jonesboro
*Hempstead
Service Area: Texarkana C.A.
*Hot Spring
Service Area: Hot Springs C.A.
*Howard
Service Area: Texarkana C.A.
*Independence
Service Area: Batesville
*Izard
Service Area: Batesville
*Jackson
Service Area: Batesville
Jefferson
Service Area: Pine Bluff C.A.
*Johnson
Service Area: Russellville C.A.
*Lafayette
Service Area: Texarkana C.A.
*Lawrence
Service Area: Jonesboro
*Lee
Service Area: Helena
*Lincoln
Service Area: Pine Bluff C.A.
*Little River
Service Area: Texarkana C.A.
*Logan
Service Area: Fort Smith C.A.
*Madison
*Marion
Service Area: Mountain Home C.A.
Miller
Service Area: Texarkana C.A.
*Mississippi
Service Area: Jonesboro
*Monroe
Service Area: Helena
*Montgomery
Service Area: Hot Springs C.A.
*Nevada
Service Area: El Dorado
*Newton
Service Area: Mountain Home C.A.
*Ouachita
Service Area: El Dorado
*Perry
Service Area: Russellville C.A.
*Phillips
Service Area: Helena
*Pike
Service Area: Hot Springs C.A.
*Poinsett
Service Area: Jonesboro
*Polk
Service Area: Fort Smith C.A.
*Pope

MENTAL HEALTH: Arkansas
County Listing

County Name

Service Area: Russellville C.A.
*Randolph
Service Area: Jonesboro
*Scott
Service Area: Fort Smith C.A.
*Searcy
Service Area: Mountain Home C.A.
Sebastian
Service Area: Fort Smith C.A.
*Sevier
Service Area: Texarkana C.A.
*Sharp
Service Area: Batesville
*St. Francis
Service Area: Helena
*Stone
Service Area: Batesville
*Union
Service Area: El Dorado
*Van Buren
Service Area: Batesville
*White
Service Area: Batesville
*Woodruff
Service Area: Batesville
*Yell
Service Area: Russellville C.A.

MENTAL HEALTH: Arkansas
Service Area Listing

Service Area Name

Batesville
County—Cleburne
County—Fulton
County—Independence
County—Izard
County—Jackson
County—Sharp
County—Stone
County—Van Buren
County—White
County—Woodruff
El Dorado
County—Calhoun
County—Columbia
County—Dallas
County—Nevada
County—Ouachita
County—Union
Fort Smith C.A.
County—Crawford
County—Franklin
County—Logan
County—Polk
County—Scott
County—Sebastian
Helena
County—Crittenden
County—Cross
County—Lee
County—Monroe
County—Phillips
County—St. Francis
Hot Springs C.A.
County—Clark
County—Garland
County—Hot Spring
County—Montgomery
County—Pike
Jonesboro
County—Clay

MENTAL HEALTH: Arkansas
Service Area Listing

Service Area Name

County—Craighead
County—Greene
County—Lawrence
County—Mississippi
County—Poinsett
County—Randolph
Monticello C.A.
County—Ashley
County—Bradley
County—Chicot
County—Desha
County—Drew
Mountain Home C.A.
County—Baxter
County—Boone
County—Marion
County—Newton
County—Searcy
Pine Bluff C.A.
County—Arkansas
County—Cleveland
County—Grant
County—Jefferson
County—Lincoln
Russellville C.A.
County—Conway
County—Johnson
County—Perry
County—Pope
County—Yell
Texarkana C.A.
County—Hempstead
County—Howard
County—Lafayette
County—Little River
County—Miller
County—Sevier

MENTAL HEALTH: California
County Listing

County Name

*Calaveras
Fresno
Service Area: West Side Fresno Co
Facility: Pleasant Valley State Prison
*Glenn
*Humboldt
Service Area: Garberville/Redway (MSSA 44)
*Imperial
Facility: Centinela State Prison
Kern
Population Group: Low Inc—Arvin/Lamont (MSSA 61)
Facility: North Kern State Prison
Facility: Wasco State Prison
*Kings
Facility: Avenal State Prison
Facility: CA State Prison—Corcoran
Facility: Substance Abuse Treatment Facility
*Lake
*Lassen (g)
Facility: High Desert State Prison
Madera (g)
Facility: Central Ca Womens Facility
Facility: Valley State Prison For Women
Marin
Facility: CA State Prison—San Quentin
Merced
Monterey

MENTAL HEALTH: California
County Listing

County Name

Facility: Correctional Train Fac—Soledad
Riverside
Facility: CA Rehabilitation Ctr
Facility: Ironwood State Prison
Sacramento
Facility: Folsom State Prison—Represa
San Bernardino
Service Area: Barstow (MSSA 149)
Facility: CA Institute For Men
San Diego
Facility: Richard J Donovan Corr Fac
San Joaquin
Facility: Deuel Voc Inst—Tracy
*Shasta
Population Group: Low Inc—Shasta Co
*Siskiyou County
Solano
Facility: CA State Prison—Vacaville
*Tehama
*Trinity
Tulare
Service Area: Earlimart (MSSA 230)
Service Area: Porterville (MSSAS 231 & 232)
Service Area: Visalia (MSSA 227, 228, 233a, 233b)
Service Area: Woodlake (MSSA 229)
*Tuolumne (g)
Facility: Sierra Conservation Center

MENTAL HEALTH: California
Service Area Listing

Service Area Name

Barstow (MSSA 149)
County—San Bernardino
Parts:
C.T. 93–95
C.T. 96.03
C.T. 116–121
Earlimart (MSSA 230)
County—Tulare
Parts:
C.T. 32
C.T. 42–44
Garberville/Redway (MSSA 44)
County—Humboldt
Parts:
C.T. 113
Porterville (MSSAS 231 & 232)
County—Tulare
Parts:
C.T. 27
C.T. 33–41
C.T. 45
Visalia (MSSA 227, 228, 233a, 233b)
County—Tulare
Parts:
C.T. 2
C.T. 3.02
C.T. 3.98
C.T. 4–6
C.T. 8–9
C.T. 10.01–10.02
C.T. 11–16
C.T. 17.01–17.02
C.T. 18–19
C.T. 20.01–20.05
C.T. 21–22
C.T. 23.01–23.02
C.T. 24–26
C.T. 28

MENTAL HEALTH: California
Service Area Listing

Service Area Name

C.T. 29.01–29.02
C.T. 30–31
West Side Fresno Co
County—Fresno
Parts:
C.T. 78
C.T. 79.98
C.T. 80–83
C.T. 84.01–84.02
Woodlake (MSSA 229)
County—Tulare
Parts:
C.T. 1
C.T. 7

MENTAL HEALTH: California
Population Group Listing

Population Group

Low Inc—Arvin/Lamont (MSSA 61)
County—Kern
Parts:
C.T. 62–64
Low Inc—Shasta Co
County—Shasta

MENTAL HEALTH: California
Facility Listing

Facility Name

Avenal State Prison
County—Kings
CA Institute For Men
County—San Bernardino
CA Rehabilitation Ctr
County—Riverside
CA State Prison—Corcoran
County—Kings
CA State Prison—San Quentin
County—Marin
CA State Prison—Vacaville
County—Solano
Centinela State Prison
County—Imperial
Central Ca Womens Facility
County—Madera
Correctional Train Fac—Soledad
County—Monterey
Deuel Voc Inst—Tracy
County—San Joaquin
Folsom State Prison—Represa
County—Sacramento
High Desert State Prison
County—Lassen
Ironwood State Prison
County—Riverside
North Kern State Prison
County—Kern
Pleasant Valley State Prison
County—Fresno
Richard J Donovan Corr Fac
County—San Diego
Sierra Conservation Center
County—Tuolumne
Substance Abuse Treatment Facility
County—Kings
Valley State Prison For Women
County—Madera
Wasco State Prison
County—Kern

MENTAL HEALTH: Colorado
County Listing

County Name

*Alamosa
Service Area: San Luis Valley
Arapahoe
Facility: Marvin W. Foote Youth Detention Center
*Cheyenne
Service Area: Northeast/East Central MH Reg
*Conejos
Service Area: San Luis Valley
*Costilla
Service Area: San Luis Valley
Denver
Facility: Denver R&D Center
*Elbert
Service Area: Northeast/East Central MH Reg
*Fremont
Facility: USP Florence
*Kit Carson
Service Area: Northeast/East Central MH Reg
*Lincoln
Service Area: Northeast/East Central MH Reg
*Logan
Service Area: Northeast/East Central MH Reg
*Mineral
Service Area: San Luis Valley
*Morgan
Service Area: Northeast/East Central MH Reg
*Phillips
Service Area: Northeast/East Central MH Reg
*Rio Grande
Service Area: San Luis Valley
*Saguache
Service Area: San Luis Valley
*Sedgwick
Service Area: Northeast/East Central MH Reg
*Washington
Service Area: Northeast/East Central MH Reg
*Yuma
Service Area: Northeast/East Central MH Reg

MENTAL HEALTH: Colorado
Service Area Listing

Service Area Name

Northeast/East Central MH Reg
County—Cheyenne
County—Elbert
County—Kit Carson
County—Lincoln
County—Logan
County—Morgan
County—Phillips
County—Sedgwick
County—Washington
County—Yuma
San Luis Valley
County—Alamosa
County—Conejos
County—Costilla
County—Mineral
County—Rio Grande
County—Saguache

MENTAL HEALTH: Colorado
Facility Listing

Facility Name
Denver R&D Center
County—Denver
Marvin W. Foote Youth Detention Center
County—Arapahoe
USP Florence
County—Fremont

MENTAL HEALTH: Connecticut
County Listing

County Name
Hartford
Service Area: Charter Oak Terrace/ Rice Heights
New London
Facility: York Corr Inst

MENTAL HEALTH: Connecticut
Service Area Listing

Service Area Name
Charter Oak Terrace/ Rice Heights
County—Hartford
Parts:
C.T. 5001–5004
C.T. 5019
C.T. 5027–5030
C.T. 5043
C.T. 5045–5046
C.T. 5049

MENTAL HEALTH: Connecticut
Facility Listing

Facility Name
York Corr Inst
County—New London

MENTAL HEALTH: Florida
County Listing

County Name
Alachua
Facility: Gainesville Corr Inst
*Baker
Facility: Baker Corr. Inst.
*Bradford
Service Area: Mental Health Catchment Area 3A
Facility: Florida State Prs
Facility: Lawtey Corr Inst
Facility: New River Corr Inst
Brevard
Facility: Brevard Corr Inst
*Calhoun
Facility: Calhoun Corr Inst
*Columbia
Service Area: Mental Health Catchment Area 3A
Facility: Columbia Corr Inst
*De Soto
Facility: Desoto Corr Inst
*Dixie
Service Area: Suwannee River
Facility: Cross City Corr Inst
Escambia
Facility: Century Corr Inst
*Gilchrist
Service Area: Suwannee River
Facility: Lancaster Corr Inst
*Glades
Population Group: Low Inc—South Central Florida

MENTAL HEALTH: Florida
County Listing

County Name
Facility: Moore Haven Corr Facility
*Gulf
Facility: Gulf Corr Inst
*Hamilton
Service Area: Mental Health Catchment Area 3A
Facility: Hamilton Corr Inst
*Hardee
Facility: Hardee Corr Inst
*Hendry
Population Group: Low Inc—South Central Florida
Facility: Hendry Corr Inst
Hernando
Facility: Hernando Corr Inst
*Highlands
Facility: Avon Park Corr Inst
Hillsborough
Population Group: Low Inc/MFW—SE Hillsborough
Facility: Hillsborough Corr Inst
*Holmes
Facility: Holmes Corr Inst
*Indian River
Facility: Indian River Corr Inst
*Jackson
Facility: Apalachee Corr Inst
Facility: Jackson Corr Inst
Facility: River Junction Corr Inst
*Jefferson
Facility: Jefferson Corr Inst
*Lafayette
Service Area: Mental Health Catchment Area 3A
Facility: Mayo Corr Inst
*Lake
Population Group: Low Inc—Lake Co
*Levy
Service Area: Suwannee River
*Liberty
Facility: Liberty Corr Inst
*Madison
Facility: Madison Corr Inst
Manatee
Population Group: Low Inc/MFW—Central Manatee
Marion
Facility: Florida Corr. Inst.
Facility: Marion Corr Inst
Martin
Population Group: Low Inc—Indiantown
Facility: Martin Corr Inst
*Monroe
Service Area: Upper/Middle Keys
Okaloosa
Facility: Okaloosa Corr Inst
*Okeechobee
Population Group: Low Inc/MFW—Okeechobee
Orange
Facility: C Fl Reception Ctr
Palm Beach
Service Area: Belle Glade/Pahokee
Facility: Glades Corr Inst
Pasco
Population Group: Low Inc/MFW E Pasco
Pinellas
Facility: Pinellas Cty Correctional Institution
Polk
Facility: Polk Corr Inst
*Putnam (g)
Facility: Putnam Corr Inst

MENTAL HEALTH: Florida
County Listing

County Name
Santa Rosa
Facility: Santa Rosa Corr Inst
St. Johns
*Sumter
Population Group: Low Inc—Sumter Co
Facility: Sumter Corr Inst
*Suwannee
Service Area: Mental Health Catchment Area 3A
*Union
Service Area: Mental Health Catchment Area 3A
Facility: N Fl Reception Ctr
*Wakulla
Facility: Wakulla Corr Inst
*Walton
Facility: Walton Corr Inst
*Washington
Facility: Washington Corr Inst

MENTAL HEALTH: Florida
Service Area Listing

Service Area Name
Belle Glade/Pahokee
County—Palm Beach
Parts:
Belle Glade-Pahokee Division
Mental Health Catchment Area 3A
County—Bradford
County—Columbia
County—Hamilton
County—Lafayette
County—Suwannee
County—Union
Suwannee River
County—Dixie
County—Gilchrist
County—Levy
Upper/Middle Keys
County—Monroe
Parts:
Middle Keys Division
Upper Keys Division

MENTAL HEALTH: Florida
Population Group Listing

Population Group
Low Inc—Indiantown
County—Martin
Parts:
Indiantown Division
Low Inc—Lake Co
County—Lake
Low Inc—South Central Florida
County—Glades
County—Hendry
Low Inc—Sumter Co
County—Sumter
Low Inc/MFW E Pasco
County—Pasco
Parts:
C.T. 320.01–320.02
C.T. 321.01–321.02
C.T. 322–329
C.T. 330.01–330.04
C.T. 331
Low Inc/MFW—Central Manatee
County—Manatee
Parts:
C.T. 1.01–1.04

MENTAL HEALTH: Florida
Population Group Listing

Population Group

C.T. 2
C.T. 3.01–3.03
C.T. 6.01
C.T. 7.01–7.02
C.T. 13
C.T. 15.01–15.02
C.T. 16
C.T. 19.01
C.T. 19.03–19.04
Low Inc/MFW—Okeechobee
County—Okeechobee
Low Inc/MFW—SE Hillsborough
County—Hillsborough
Parts:
Brandon Division
Gibsonton Division
Palm River-East Tampa Division
Plant City Division
Ruskin Division
Wimauma-Lithia Division

MENTAL HEALTH: Florida
Facility Listing

Facility Name

Apalachee Corr Inst
County—Jackson
Avon Park Corr Inst
County—Highlands
Baker Corr. Inst.
County—Baker
Brevard Corr Inst
County—Brevard
C Fl Reception Ctr
County—Orange
Calhoun Corr Inst
County—Calhoun
Century Corr Inst
County—Escambia
Columbia Corr Inst
County—Columbia
Cross City Corr Inst
County—Dixie
Desoto Corr Inst
County—De Soto
Florida Corr. Inst.
County—Marion
Florida State Prs
County—Bradford
Gainesville Corr Inst
County—Alachua
Glades Corr Inst
County—Palm Beach
Gulf Corr Inst
County—Gulf
Hamilton Corr Inst
County—Hamilton
Hardee Corr Inst
County—Hardee
Hendry Corr Inst
County—Hendry
Hernando Corr Inst
County—Hernando
Hillsborough Corr Inst
County—Hillsborough
Holmes Corr Inst
County—Holmes
Indian River Corr Inst
County—Indian River
Jackson Corr Inst
County—Jackson
Jefferson Corr Inst

MENTAL HEALTH: Florida
Facility Listing

Facility Name

County—Jefferson
Lancaster Corr Inst
County—Gilchrist
Lawtey Corr Inst
County—Bradford
Liberty Corr Inst
County—Liberty
Madison Corr Inst
County—Madison
Marion Corr Inst
County—Marion
Martin Corr Inst
County—Martin
Mayo Corr Inst
County—Lafayette
Moore Haven Corr Facility
County—Glades
N Fl Reception Ctr
County—Union
New River Corr Inst
County—Bradford
Okaloosa Corr Inst
County—Okaloosa
Pinellas Cty Correctional Institution
County—Pinellas
Polk Corr Inst
County—Polk
Putnam Corr Inst
County—Putnam
River Junction Corr Inst
County—Jackson
Santa Rosa Corr Inst
County—Santa Rosa
Sumter Corr Inst
County—Sumter
Wakulla Corr Inst
County—Wakulla
Walton Corr Inst
County—Walton
Washington Corr Inst
County—Washington

MENTAL HEALTH: Georgia
County Listing

County Name

*Appling
Service Area: Pineland Catchment Area
*Atkinson
Service Area: Satilla Ca #32
*Bacon
Service Area: Satilla Ca #32
*Baker
Service Area: Albany Catchment Area
*Brantley
Service Area: Satilla Ca #32
*Bryan
Service Area: Hinesville
*Bulloch
Service Area: Pineland Catchment Area
*Burke
Service Area: Ogeechee Catchment Area
*Butts
Service Area: McIntosh Trail Catchment Area
*Calhoun
Service Area: Albany Catchment Area
*Candler
Service Area: Pineland Catchment Area
*Carroll
Service Area: Chattahoochee-Flint
*Catoosa

MENTAL HEALTH: Georgia
County Listing

County Name

Service Area: MHCA #1—Lookout Mountain
*Charlton
Service Area: Satilla Ca #32
*Chattooga
Service Area: MHCA #1—Lookout Mountain
*Clinch
Service Area: Satilla Ca #32
Cobb
Facility: Devereux Treatment Center
*Coffee
Service Area: Satilla Ca #32
*Colquitt
Service Area: Thomas Trail
*Coweta
Service Area: Chattahoochee-Flint
*Crawford
Service Area: Phoenix Catchment Area
*Crisp
Service Area: Middle Flint CA 26
*Dade
Service Area: MHCA #1—Lookout Mountain
*Decatur
Service Area: Thomas Trail
*Dooly
Service Area: Middle Flint CA 26
*Dougherty
Service Area: Albany Catchment Area
*Early
Service Area: Albany Catchment Area
*Emanuel
Service Area: Ogeechee Catchment Area
*Evans
Service Area: Pineland Catchment Area
*Fayette
Service Area: McIntosh Trail Catchment Area
Fulton
Service Area: South Central Fulton
Service Area: West Fulton Trail
*Glascock
Service Area: Ogeechee Catchment Area
*Grady
Service Area: Thomas Trail
*Heard
Service Area: Chattahoochee-Flint
*Henry
Service Area: McIntosh Trail Catchment Area
Houston
Service Area: Phoenix Catchment Area
*Irwin
Facility: Irwin Youth Development Campus
*Jeff Davis
Service Area: Pineland Catchment Area
*Jefferson
Service Area: Ogeechee Catchment Area
*Jenkins
Service Area: Ogeechee Catchment Area
*Johnson
Facility: Wrightsville Youth Develp Campus
*Lamar
Service Area: McIntosh Trail Catchment Area
Lee
Service Area: Albany Catchment Area
*Liberty
Service Area: Hinesville
*Long
Service Area: Hinesville

MENTAL HEALTH: Georgia
County Listing

County Name

*Macon
Service Area: Middle Flint CA 26
*Marion
Service Area: Middle Flint CA 26
*McIntosh
Service Area: Hinesville
*Meriwether
Service Area: Chattahoochee-Flint
*Miller
Service Area: Albany Catchment Area
*Mitchell
Service Area: Thomas Trail
Facility: Autry State Prison
Peach
Service Area: Phoenix Catchment Area
*Pierce
Service Area: Satilla Ca #32
*Pike
Service Area: McIntosh Trail Catchment Area
*Schley
Service Area: Middle Flint CA 26
*Screven
Service Area: Ogeechee Catchment Area
*Seminole
Service Area: Thomas Trail
*Spalding
Service Area: McIntosh Trail Catchment Area
*Sumter
Service Area: Middle Flint CA 26
*Tattnall
Service Area: Pineland Catchment Area
*Taylor
Service Area: Middle Flint CA 26
*Terrell
Service Area: Albany Catchment Area
*Thomas
Service Area: Thomas Trail
*Toombs
Service Area: Pineland Catchment Area
*Troup
Service Area: Chattahoochee-Flint
*Upson
Service Area: McIntosh Trail Catchment Area
*Walker
Service Area: MHCA #1—Lookout Mountain
*Ware
Service Area: Satilla Ca #32
*Wayne
Service Area: Pineland Catchment Area
*Webster
Service Area: Middle Flint CA 26
*Worth
Service Area: Albany Catchment Area

MENTAL HEALTH: Georgia
Service Area Listing

Service Area Name

Albany Catchment Area
County—Baker
County—Calhoun
County—Dougherty
County—Early
County—Lee
County—Miller
County—Terrell
County—Worth
Chattahoochee-Flint
County—Carroll
County—Coweta
County—Heard
County—Meriwether
County—Troup
Hinesville
County—Bryan
County—Liberty
County—Long
County—McIntosh
McIntosh Trail Catchment Area
County—Butts
County—Fayette
County—Henry
County—Lamar
County—Pike
County—Spalding
County—Upson
Middle Flint CA 26
County—Crisp
County—Dooly
County—Macon
County—Marion
County—Schley
County—Sumter
County—Taylor
County—Webster
MHCA #1—Lookout Mountain
County—Catoosa
County—Chattooga
County—Dade
County—Walker
Ogeechee Catchment Area
County—Burke
County—Emanuel
County—Glascock
County—Jefferson
County—Jenkins
County—Screven
Phoenix Catchment Area
County—Crawford
County—Houston
County—Peach
Pineland Catchment Area
County—Appling
County—Bulloch
County—Candler
County—Evans
County—Jeff Davis
County—Tattnall
County—Toombs
County—Wayne
Satilla Ca #32
County—Atkinson
County—Bacon
County—Brantley
County—Charlton
County—Clinch
County—Coffee
County—Pierce
County—Ware
South Central Fulton
County—Fulton
Parts:
C.T. 44
C.T. 46.95
C.T. 48
C.T. 49.95
C.T. 50
C.T. 52–53
C.T. 55.01–55.02
C.T. 56–58
C.T. 63–64
C.T. 67
C.T. 68.01–68.02
C.T. 69–73
Thomas Trail
County—Colquitt
County—Decatur
County—Grady
County—Mitchell
County—Seminole
County—Thomas
West Fulton Trail
County—Fulton
Parts:
C.T. 60–62
C.T. 77.01–77.02
C.T. 78.02–78.04
C.T. 79–80
C.T. 81.01–81.02
C.T. 82.01–82.02
C.T. 83.01–83.02
C.T. 84–85
C.T. 86.01–86.02
C.T. 87.01–87.02
C.T. 88
C.T. 103.01–103.02

MENTAL HEALTH: Georgia
Facility Listing

Facility Name

Autry State Prison 3
County—Mitchell
Devereux Treatment Center
County—Cobb
Irwin Youth Development Campus
County—Irwin
Wrightsville Youth Develp Campus
County—Johnson

MENTAL HEALTH: Hawaii
County Listing

County Name

*Hawaii
Service Area: Kau
Service Area: Puna
Population Group: Low Inc—N Hawai'i
Honolulu
Service Area: Kalihi Palama
*Maui
Service Area: Island Of Molokai

MENTAL HEALTH: Hawaii
Service Area Listing

Service Area Name

Island Of Molokai
Parts:
C.T. 319
County—Maui
Parts:
C.T. 317–318
Kalihi Palama
County—Honolulu
Parts:
C.T. 51–57
C.T. 57.99–58.00
C.T. 59–61
C.T. 62.01–62.02
C.T. 63.01–63.02
C.T. 64.01–64.02

MENTAL HEALTH: Hawaii
Service Area Listing

Service Area Name

C.T. 65–66
Kau
County—Hawaii
Parts:
C.T. 212
Puna
County—Hawaii
Parts:
C.T. 210.01–210.02
C.T. 211

MENTAL HEALTH: Hawaii
Population Group Listing

Population Group

Low Inc—N Hawaii
County—Hawaii
Parts:
C.T. 217–221

MENTAL HEALTH: Idaho
County Listing

County Name

*Adams
Population Group: Low Inc/MFW—Catchment Area III
*Bannock
Service Area: Mental Hlth Region Vi
*Bear Lake
Service Area: Mental Hlth Region Vi
*Benewah
Service Area: Mental Hlth Region I
*Bingham
Service Area: Mental Hlth Region Vi
*Blaine
Service Area: Mental Hlth Region V
*Bonner
Service Area: Mental Hlth Region I
*Bonneville
Service Area: MH Region Vii
*Boundary
Service Area: Mental Hlth Region I
*Butte
Service Area: MH Region Vii
*Camas
Service Area: Mental Hlth Region V
*Canyon
Population Group: Low Inc/MFW—Catchment Area III
*Caribou
Service Area: Mental Hlth Region Vi
*Cassia
Service Area: Mental Hlth Region V
*Clark
Service Area: MH Region Vii
*Clearwater
Service Area: Mental Hlth Region II
*Custer
Service Area: MH Region Vii
*Franklin
Service Area: Mental Hlth Region Vi
*Fremont
Service Area: MH Region Vii
*Gem
Population Group: Low Inc/MFW—Catchment Area III
*Gooding
Service Area: Mental Hlth Region V
*Idaho
Service Area: Mental Hlth Region II
*Jefferson

MENTAL HEALTH: Idaho
County Listing

County Name

Service Area: MH Region Vii
*Jerome
Service Area: Mental Hlth Region V
*Kootenai
Service Area: Mental Hlth Region I
*Latah
Service Area: Mental Hlth Region II
*Lemhi
Service Area: MH Region Vii
*Lewis
Service Area: Mental Hlth Region II
*Lincoln
Service Area: Mental Hlth Region V
*Madison
Service Area: MH Region Vii
*Minidoka
Service Area: Mental Hlth Region V
*Nez Perce
Service Area: Mental Hlth Region II
*Oneida
Service Area: Mental Hlth Region Vi
*Owyhee
Population Group: Low Inc/MFW—Catchment Area III
*Payette
Population Group: Low Inc/MFW—Catchment Area III
*Power
Service Area: Mental Hlth Region Vi
*Shoshone
Service Area: Mental Hlth Region I
*Teton
Service Area: MH Region Vii
*Twin Falls
Service Area: Mental Hlth Region V
*Washington
Population Group: Low Inc/MFW—Catchment Area III

MENTAL HEALTH: Idaho
Service Area Listing

Service Area Name

Mental Hlth Region I
County—Benewah
County—Bonner
County—Boundary
County—Kootenai
County—Shoshone
Mental Hlth Region II
County—Clearwater
County—Idaho
County—Latah
County—Lewis
County—Nez Perce
Mental Hlth Region V
County—Blaine
County—Camas
County—Cassia
County—Gooding
County—Jerome
County—Lincoln
County—Minidoka
County—Twin Falls
Mental Hlth Region Vi
County—Bannock
County—Bear Lake
County—Bingham
County—Caribou
County—Franklin
County—Oneida
County—Power

MENTAL HEALTH: Idaho
Service Area Listing

Service Area Name

MH Region Vii
County—Bonneville
County—Butte
County—Clark
County—Custer
County—Fremont
County—Jefferson
County—Lemhi
County—Madison
County—Teton

MENTAL HEALTH: Idaho
Population Group Listing

Population Group

Low Inc/MFW—Catchment Area III
County—Adams
County—Canyon
County—Gem
County—Owyhee
County—Payette
County—Washington

MENTAL HEALTH: Illinois
County Listing

County Name

*Christian
Service Area: Catchment Area 03–03–04
*Clay
Service Area: Catchment Area 4–03–33
*Coles
Service Area: Catchment Area 3
Cook
Service Area: Ashburn/Beverly/Mt Greenwood/Morgan Park
Service Area: Auburn Gresham/Washington Heights
Service Area: Roseland/Pullman/Riverdale
Service Area: South Chicago
Service Area: South Shore/Chatham/Avalon Park/Burnside
Population Group: Hmlss—Uptown/Near North Side/Loop
Facility: Cook Co Dept Of Corr
Facility: Englewood Neighborhood Hlth Ctr
Facility: Tinley Park Mhc
*Crawford
Service Area: Catchment Area 4–03–33
*Cumberland
Service Area: Catchment Area 3
*Douglas
Service Area: Catchment Area 3
*Edwards
Service Area: Catchment Area 4–03–33
*Franklin
Service Area: Catchment Area 4
*Gallatin
Service Area: Catchment Area 4
*Hamilton
Service Area: Catchment Area 4
*Henderson
Service Area: Galesburg
*Henry
Service Area: Galesburg
*Jasper
Service Area: Catchment Area 4–03–33
*Jefferson
Service Area: Catchment Area 4
*Knox
Service Area: Galesburg
*Lawrence

MENTAL HEALTH: Illinois
County Listing

County Name

Service Area: Catchment Area 4–03–33
*Macoupin
Service Area: Catchment Area 03–03–04
*Montgomery
Service Area: Catchment Area 03–03–04
*Richland
Service Area: Catchment Area 4–03–33
*Saline
Service Area: Catchment Area 4
*Shelby
Service Area: Catchment Area 3
*Wabash
Service Area: Catchment Area 4–03–33
*Warren
Service Area: Galesburg
*Wayne
Service Area: Catchment Area 4–03–33
*White
Service Area: Catchment Area 4
*Williamson
Service Area: Catchment Area 4

MENTAL HEALTH: Illinois
Service Area Listing

Service Area Name

Ashburn/Beverly/Mt Greenwood/Morgan Park
County—Cook
Parts:
C.T. 7001–7005
C.T. 7201–7207
C.T. 7401–7404
C.T. 7501–7506
Auburn Gresham/Washington Heights
County—Cook
Parts:
C.T. 7101–7115
C.T. 7301–7307
Catchment Area 03–03–04
County—Christian
County—Macoupin
County—Montgomery
Catchment Area 3
County—Coles
County—Cumberland
County—Douglas
County—Shelby
Catchment Area 4
County—Franklin
County—Gallatin
County—Hamilton
County—Jefferson
County—Saline
County—White
County—Williamson
Catchment Area 4–03–33
County—Clay
County—Crawford
County—Edwards
County—Jasper
County—Lawrence
County—Richland
County—Wabash
County—Wayne
Galesburg
County—Henderson
County—Henry
County—Knox
County—Warren
Roseland/Pullman/Riverdale
County—Cook
Parts:

MENTAL HEALTH: Illinois
Service Area Listing

Service Area Name

C.T. 4901–4914
C.T. 5001–5003
C.T. 5301–5306
C.T. 5401
South Chicago
County—Cook
Parts:
C.T. 4601–4610
C.T. 4801–4805
C.T. 5101–5105
C.T. 5201–5206
C.T. 5501–5502
South Shore/Chatham/Avalon Park/Burnside
County—Cook
Parts:
C.T. 4301–4314
C.T. 4401–4409
C.T. 4501–4503
C.T. 4701
C.T. 6901–6915

MENTAL HEALTH: Ilinois
Population Group Listing

Population Group

Hmlss—Uptown/Near North Side/Loop 3
County—Cook
Parts:
Edgewater (C.T. 301–309)
Lakeview (C.T. 601–634)
Lincoln Park(C.T.701–720
Loop (C.T. 3201–3206)
Near N Side (C.T.801–819
Uptown (C.T. 310–321)

MENTAL HEALTH: Illinois
Facility Listing

Facility Name

Cook Co Dept Of Corr
County—Cook
Englewood Neighborhood Hlth Ctr
County—Cook
Tinley Park Mhc
County—Cook

MENTAL HEALTH: Indiana
County Listing

County Name

Adams
*Crawford
Service Area: Southern Indiana Catchment Area
*Dubois
Service Area: Southern Indiana Catchment Area
*Grant
*Greene
Hendricks
Facility: Reception And Diagnostic Ctr
*Huntington
Service Area: Warsaw
*Kosciusko
Service Area: Warsaw
*La Porte
Facility: Indiana State Prison
Lake
Service Area: Gary
Madison
Facility: Pendleton Corr Fac
*Marshall

MENTAL HEALTH: Indiana
County Listing

County Name

Service Area: Warsaw
*Miami
Facility: Miami Corr Facility
*Orange
Service Area: Southern Indiana Catchment Area
*Parke
Facility: Rockville Corr Fac
*Perry
Service Area: Southern Indiana Catchment Area
Facility: Branchville Training Ctr
*Spencer
Service Area: Southern Indiana Catchment Area
*Sullivan
*Wabash
Service Area: Warsaw
*Whitley
Service Area: Warsaw

MENTAL HEALTH: Indiana
Service Area Listing

Service Area Name

Gary
County—Lake
Parts:
C.T. 101
C.T. 102.98–103.00
C.T. 104–134
C.T. 411–412
C.T. 413.01
Southern Indiana Catchment Area
County—Crawford
County—Dubois
County—Orange
County—Perry
County—Spencer
Warsaw
County—Huntington
County—Kosciusko
County—Marshall
County—Wabash
County—Whitley

MENTAL HEALTH: Indiana
Facility Listing

Facility Name

Branchville Training Ctr
County—Perry
Indiana State Prison
County—La Porte
Miami Corr Facility
County—Miami
Pendleton Corr Fac
County—Madison
Reception And Diagnostic Ctr
County—Hendricks
Rockville Corr Fac
County—Parke

MENTAL HEALTH: Iowa
County Listing

County Name

*Adair
Service Area: Catchment Area 13
*Allamakee
Service Area: Catchment Area 3
*Appanoose

MENTAL HEALTH: Iowa
County Listing

County Name

Service Area: Catchment Area 15
*Audubon
Service Area: Catchment Area 13
*Boone
Service Area: Ft Dodge/Boone
*Bremer
Service Area: Catchment Area 3
*Buchanan
Service Area: Catchment Area 3
*Buena Vista
Service Area: MHCA 1
*Butler
Service Area: Catchment Area 3
*Calhoun
Service Area: Ft Dodge/Boone
*Cass
Service Area: Catchment Area 13
*Cerro Gordo
Service Area: Mental Hlth Catch Area 2
*Cherokee
Service Area: MHCA 1
*Chickasaw
Service Area: Catchment Area 3
*Clay
Service Area: MHCA 1
*Clayton
Service Area: Catchment Area 3
*Clinton
Service Area: Clinton/Jackson
*Dallas
Service Area: Catchment Area 13
*Davis
Service Area: Catchment Area 15
*Delaware
Service Area: Catchment Area 3
*Des Moines
Service Area: Mental Hlth Catch Area 16
*Dickinson
Service Area: MHCA 1
Dubuque
Service Area: Clinton/Jackson
*Emmet
Service Area: MHCA 1
*Fayette
Service Area: Catchment Area 3
*Floyd
Service Area: Mental Hlth Catch Area 2
*Franklin
Service Area: Mental Hlth Catch Area 2
*Greene
Service Area: Ft Dodge/Boone
*Guthrie
Service Area: Catchment Area 13
*Hamilton
Service Area: Ft Dodge/Boone
*Hancock
Service Area: Mental Hlth Catch Area 2
*Hardin
Service Area: Catchment Area 8
*Harrison
Service Area: Catchment Area 12
*Henry
Service Area: Mental Hlth Catch Area 16
*Howard
Service Area: Catchment Area 3
*Humboldt
Service Area: Ft Dodge/Boone
*Ida
Service Area: MHCA 1
*Jackson
Service Area: Clinton/Jackson
*Jasper

MENTAL HEALTH: Iowa
County Listing

County Name

Service Area: Catchment Area 8
*Jefferson
Service Area: Mental Hlth Catch Area 16
*Keokuk
Service Area: Catchment Area 8
*Kossuth
Service Area: Mental Hlth Catch Area 2
*Lee
Service Area: Mental Hlth Catch Area 16
*Louisa
Service Area: Mental Hlth Catch Area 16
*Lucas
Service Area: Catchment Area 15
*Lyon
Service Area: MHCA 1
*Madison
Service Area: Catchment Area 13
*Mahaska
Service Area: Catchment Area 8
*Marion
Service Area: Catchment Area 8
*Marshall
Service Area: Catchment Area 8
*Mitchell
Service Area: Mental Hlth Catch Area 2
*Monona
Service Area: Catchment Area 12
*Monroe
Service Area: Catchment Area 15
*Montgomery
Service Area: Catchment Area 13
*O'brien
Service Area: MHCA 1
*Osceola
Service Area: MHCA 1
*Page
Service Area: Catchment Area 13
*Palo Alto
Service Area: MHCA 1
*Plymouth
Service Area: MHCA 1
*Pocahontas
Service Area: MHCA 1
*Poweshiek
Service Area: Catchment Area 8
*Shelby
Service Area: Catchment Area 13
*Sioux
Service Area: MHCA 1
*Tama
Service Area: Catchment Area 8
*Van Buren
Service Area: Mental Hlth Catch Area 16
*Wapello
Service Area: Catchment Area 15
*Washington
Service Area: Mental Hlth Catch Area 16
*Wayne
Service Area: Catchment Area 15
*Webster
Service Area: Ft Dodge/Boone
*Winnebago
Service Area: Mental Hlth Catch Area 2
*Winneshiek
Service Area: Catchment Area 3
*Woodbury
Service Area: Catchment Area 12
*Worth
Service Area: Mental Hlth Catch Area 2
*Wright
Service Area: Mental Hlth Catch Area 2

MENTAL HEALTH: Iowa
Service Area Listing

Service Area Name

Catchment Area 12
County—Harrison
County—Monona
County—Woodbury
Catchment Area 13
County—Adair
County—Audubon
County—Cass
County—Dallas
Parts:
Dallas Township
Lincoln Township
Linn Township
Spring Valley Township
Union Township
Washington Township
County—Adair
County—Audubon
County—Cass
County—Guthrie
County—Madison
County—Montgomery
County—Page
County—Shelby
Catchment Area 15
County—Appanoose
County—Davis
County—Lucas
County—Monroe
County—Wapello
County—Wayne
Catchment Area 3
County—Allamakee
County—Bremer
County—Buchanan
County—Butler
County—Chickasaw
County—Clayton
County—Delaware
County—Fayette
County—Howard
County—Winneshiek
Catchment Area 8
County—Hardin
County—Jasper
County—Keokuk
County—Mahaska
County—Marion
County—Marshall
County—Poweshiek
County—Tama
Clinton/Jackson
County—Clinton
County—Dubuque
County—Jackson
Ft Dodge/Boone
County—Boone
County—Calhoun
County—Greene
County—Hamilton
County—Humboldt
County—Webster
Mental Hlth Catch Area 16
County—Des Moines
County—Henry
County—Jefferson
County—Lee
County—Louisa
County—Van Buren
County—Washington
Mental Hlth Catch Area 2
County—Cerro Gordo

MENTAL HEALTH: Iowa
Service Area Listing

Service Area Name

County—Floyd
County—Franklin
County—Hancock
County—Kossuth
County—Mitchell
County—Winnebago
County—Worth
County—Wright
MHCA 1
County—Buena Vista
County—Cherokee
County—Clay
County—Dickinson
County—Emmet
County—Ida
County—Lyon
County—O'brien
County—Osceola
County—Palo Alto
County—Plymouth
County—Pocahontas
County—Sioux

MENTAL HEALTH: Kansas
County Listing

County Name

*Allen
Service Area: Mental Hlth Area 7
*Anderson
Service Area: Mental Hlth Area 7
*Atchison
Service Area: Mental Hlth Area 4
*Barber
Service Area: Catchment Area 21
*Barton
Service Area: Mental Hlth Area 20
*Bourbon
Service Area: Mental Hlth Area 7
*Brown
Service Area: Mental Hlth Area 3
*Chase
Service Area: Mental Hlth Area 12
*Chautauqua
Service Area: Mental Hlth Area 13
*Cherokee
*Cheyenne
Service Area: Mental Hlth Area 23
*Clark
Service Area: Mental Hlth Area 22
*Cloud
Service Area: Mental Health Area 14 (Part)
*Coffey
Service Area: Mental Hlth Area 12
*Comanche
Service Area: Mental Hlth Area 22
*Cowley
*Crawford
*Decatur
Service Area: Mental Hlth Area 23
*Dickinson
Service Area: Mental Hlth Area 15
*Doniphan
Service Area: Mental Hlth Area 3
*Edwards
Service Area: Mental Hlth Area 22
*Elk
Service Area: Mental Hlth Area 13
*Ellis
Service Area: Mental Hlth Area 23
*Ellsworth
Service Area: Mental Hlth Area 15

MENTAL HEALTH: Kansas
County Listing

County Name

*Finney
Service Area: Mental Health Area 24
*Ford
Service Area: Mental Health Area 24
*Franklin
*Gove
Service Area: Mental Hlth Area 23
*Graham
Service Area: Mental Hlth Area 23
*Grant
Service Area: Mental Health Area 24
*Gray
Service Area: Mental Health Area 24
*Greeley
Service Area: Mental Health Area 24
*Greenwood
Service Area: Mental Hlth Area 12
*Hamilton
Service Area: Mental Health Area 24
*Harper
Service Area: Catchment Area 21
*Haskell
Service Area: Mental Hlth Area 25
*Hodgeman
Service Area: Mental Health Area 24
*Jackson
Service Area: Mental Hlth Area 3
*Jefferson
Service Area: Mental Hlth Area 4
*Jewell
Service Area: Mental Health Area 14 (Part)
*Kearny
Service Area: Mental Health Area 24
*Kingman
Service Area: Catchment Area 21
*Kiowa
Service Area: Mental Hlth Area 22
*Labette
*Lane
Service Area: Mental Health Area 24
Leavenworth
Service Area: Mental Hlth Area 4
*Lincoln
Service Area: Mental Hlth Area 15
*Linn
Service Area: Mental Hlth Area 7
*Logan
Service Area: Mental Hlth Area 23
*Lyon
Service Area: Mental Hlth Area 12
*Meade
Service Area: Mental Hlth Area 25
Miami
Service Area: Mental Hlth Area 6
*Mitchell
Service Area: Mental Health Area 14 (Part)
*Montgomery
Service Area: Mental Hlth Area 13
*Morris
Service Area: Mental Hlth Area 12
*Morton
Service Area: Mental Health Area 24
*Nemaha
Service Area: Mental Hlth Area 3
*Neosho
Service Area: Mental Hlth Area 7
*Ness
Service Area: Mental Hlth Area 23
*Norton
Service Area: Mental Hlth Area 23
*Osage
Service Area: Mental Hlth Area 12

MENTAL HEALTH: Kansas
County Listing

County Name

*Osborne
Service Area: Mental Hlth Area 23
*Ottawa
Service Area: Mental Hlth Area 15
*Pawnee
Service Area: Mental Hlth Area 20
*Phillips
Service Area: Mental Hlth Area 23
*Pratt
Service Area: Catchment Area 21
*Rawlins
Service Area: Mental Hlth Area 23
*Reno
Service Area: Catchment Area 21
*Republic
Service Area: Mental Health Area 14 (Part)
*Rice
Service Area: Mental Hlth Area 20
*Rooks
Service Area: Mental Hlth Area 23
*Rush
Service Area: Mental Hlth Area 23
*Russell
Service Area: Mental Hlth Area 23
*Saline
Service Area: Mental Hlth Area 15
*Scott
Service Area: Mental Health Area 24
*Seward
Service Area: Mental Hlth Area 25
*Sheridan
Service Area: Mental Hlth Area 23
*Sherman
Service Area: Mental Hlth Area 23
*Smith
Service Area: Mental Hlth Area 23
*Stafford
Service Area: Mental Hlth Area 20
*Stanton
Service Area: Mental Health Area 24
*Stevens
Service Area: Mental Hlth Area 25
*Sumner
*Thomas
Service Area: Mental Hlth Area 23
*Trego
Service Area: Mental Hlth Area 23
*Wabaunsee
Service Area: Mental Hlth Area 12
*Wallace
Service Area: Mental Hlth Area 23
*Washington
Service Area: Mental Health Area 14 (Part)
*Wichita
Service Area: Mental Health Area 24
*Wilson
Service Area: Mental Hlth Area 13
*Woodson
Service Area: Mental Hlth Area 7

MENTAL HEALTH: Kansas
Service Area Listing

Service Area Name

Catchment Area 21
County—Barber
County—Harper
County—Kingman
County—Pratt
County—Reno
Mental Health Area 14 (Part)
County—Cloud

MENTAL HEALTH: Kansas
Service Area Listing

Service Area Name

County—Jewell
County—Mitchell
County—Republic
County—Washington
Mental Health Area 24
County—Finney
County—Ford
County—Grant
County—Gray
County—Greeley
County—Hamilton
County—Hodgeman
County—Kearny
County—Lane
County—Morton
County—Scott
County—Stanton
County—Wichita
Mental Hlth Area 12
County—Chase
County—Coffey
County—Greenwood
County—Lyon
County—Morris
County—Osage
County—Wabaunsee
Mental Hlth Area 13
County—Chautauqua
County—Elk
County—Montgomery
County—Wilson
Mental Hlth Area 15
County—Dickinson
County—Ellsworth
County—Lincoln
County—Ottawa
County—Saline
Mental Hlth Area 20
County—Barton
County—Pawnee
County—Rice
County—Stafford
Mental Hlth Area 22
County—Clark
County—Comanche
County—Edwards
County—Kiowa
Mental Hlth Area 23
County—Cheyenne
County—Decatur
County—Ellis
County—Gove
County—Graham
County—Logan
County—Ness
County—Norton
County—Osborne
County—Phillips
County—Rawlins
County—Rooks
County—Rush
County—Russell
County—Sheridan
County—Sherman
County—Smith
County—Thomas
County—Trego
County—Wallace
Mental Hlth Area 25
County—Haskell
County—Meade
County—Seward

MENTAL HEALTH: Kansas
Service Area Listing

Service Area Name

County—Stevens
Mental Hlth Area 3
County—Brown
County—Doniphan
County—Jackson
County—Nemaha
Mental Hlth Area 4
County—Atchison
County—Jefferson
County—Leavenworth
Mental Hlth Area 6
County—Miami
Mental Hlth Area 7
County—Allen
County—Anderson
County—Bourbon
County—Linn
County—Neosho
County—Woodson

MENTAL HEALTH: Kentucky
County Listing

County Name

*Adair
Service Area: Lake Cumberland Catchment Area
*Allen
Service Area: Barren River Catchment Area
*Anderson
*Ballard
Service Area: Western Kentucy
*Barren
Service Area: Barren River Catchment Area
*Bath
Service Area: Gateway
*Bell
Service Area: Cumberland River B
*Boyd
Service Area: Fivco Catchment Area
*Boyle
Service Area: Danville Catchment Area
*Bracken
Service Area: Buffalo Trace
*Breathitt
Service Area: Upper Kentucky River
*Breckinridge
Service Area: North Central
*Butler
Service Area: Barren River Catchment Area
*Caldwell
Service Area: Pennyroyal
*Calloway
Service Area: Western Kentucy
*Carlisle
Service Area: Western Kentucy
*Carroll
Service Area: Northern Kentucky
*Carter
Service Area: Fivco Catchment Area
*Casey
Service Area: Lake Cumberland Catchment Area
*Christian
Service Area: Pennyroyal
*Clay
Service Area: Cumberland River A
*Clinton

MENTAL HEALTH: Kentucky
County Listing

Service Area: Lake Cumberland Catchment Area
*Crittenden
Service Area: Pennyroyal
*Cumberland
Service Area: Lake Cumberland Catchment Area
*Daviess
Service Area: Green River Catchment Area
*Edmonson
Service Area: Barren River Catchment Area
*Elliott
Service Area: Fivco Catchment Area
*Estill
*Fleming
Service Area: Buffalo Trace
*Floyd
Service Area: Mountain
*Franklin
*Fulton
Service Area: Western Kentucy
*Gallatin
Service Area: Northern Kentucky
*Garrard
Service Area: Danville Catchment Area
*Grant
Service Area: Northern Kentucky
*Graves
Service Area: Western Kentucy
*Grayson
Service Area: North Central
*Green
Service Area: Lake Cumberland Catchment Area
*Greenup
Service Area: Fivco Catchment Area
*Hancock
Service Area: Green River Catchment Area
*Hardin
Service Area: North Central
*Harlan
Service Area: Cumberland River B
*Harrison
*Hart
Service Area: Barren River Catchment Area
*Henderson
Service Area: Green River Catchment Area
*Henry
*Hickman
Service Area: Western Kentucy
*Hopkins
Service Area: Pennyroyal
*Jackson
Service Area: Cumberland River A
*Johnson
Service Area: Mountain
*Knott
Service Area: Upper Kentucky River
*Knox
Service Area: Cumberland River B
*Larue
Service Area: North Central
*Laurel
Service Area: Cumberland River A
*Lawrence
Service Area: Fivco Catchment Area
*Lee
Service Area: Upper Kentucky River
*Leslie
Service Area: Upper Kentucky River
*Letcher

MENTAL HEALTH: Kentucky
County Listing

Service Area: Upper Kentucky River
*Lewis
Service Area: Buffalo Trace
*Lincoln
Service Area: Danville Catchment Area
*Livingston
Service Area: Pennyroyal
*Logan
Service Area: Barren River Catchment Area
*Lyon
Service Area: Pennyroyal
Madison
*Magoffin
Service Area: Mountain
*Marion
Service Area: North Central
*Marshall
Service Area: Western Kentucy
*Martin
Service Area: Mountain
*Mason
Service Area: Buffalo Trace
*McCracken
Service Area: Western Kentucy
*McCreary
Service Area: Lake Cumberland Catchment Area
*McLean
Service Area: Green River Catchment Area
*Meade
Service Area: North Central
*Menifee
Service Area: Gateway
*Mercer
Service Area: Danville Catchment Area
*Metcalfe
Service Area: Barren River Catchment Area
*Monroe
Service Area: Barren River Catchment Area
*Montgomery
Service Area: Gateway
*Morgan
Service Area: Gateway
*Muhlenberg
Service Area: Pennyroyal
*Nelson
Service Area: North Central
*Nicholas
*Ohio
Service Area: Green River Catchment Area
*Owen
Service Area: Northern Kentucky
*Owsley
Service Area: Upper Kentucky River
*Perry
Service Area: Upper Kentucky River
*Pike
Service Area: Mountain
*Powell
*Pulaski
Service Area: Lake Cumberland Catchment Area
*Robertson
Service Area: Buffalo Trace
*Rockcastle
Service Area: Cumberland River A
*Rowan
Service Area: Gateway
*Russell
Service Area: Lake Cumberland Catchment Area

MENTAL HEALTH: Kentucky
County Listing

*Simpson
Service Area: Barren River Catchment Area
*Spencer
*Taylor
Service Area: Lake Cumberland Catchment Area
*Todd
Service Area: Pennyroyal
*Trigg
Service Area: Pennyroyal
*Trimble
*Union
Service Area: Green River Catchment Area
*Warren
Service Area: Barren River Catchment Area
*Washington
Service Area: North Central
*Wayne
Service Area: Lake Cumberland Catchment Area
*Webster
Service Area: Green River Catchment Area
*Whitley
Service Area: Cumberland River A
*Wolfe
Service Area: Upper Kentucky River

MENTAL HEALTH: Kentucky
Service Area Listing

Service Area Name

Barren River Catchment Area
County—Allen
County—Barren
County—Butler
County—Edmonson
County—Hart
County—Logan
County—Metcalfe
County—Monroe
County—Simpson
County—Warren
Buffalo Trace
County—Bracken
County—Fleming
County—Lewis
County—Mason
County—Robertson
Cumberland River A
County—Clay
County—Jackson
County—Laurel
County—Rockcastle
County—Whitley
Cumberland River B
County—Bell
County—Harlan
County—Knox
Danville Catchment Area
County—Boyle
County—Garrard
County—Lincoln
County—Mercer
Fivco Catchment Area
County—Boyd
County—Carter
County—Elliott
County—Greenup
County—Lawrence
Gateway
County—Bath

MENTAL HEALTH: Kentucky
Service Area Listing

Service Area Name

County—Menifee
County—Montgomery
County—Morgan
County—Rowan
Green River Catchment Area
County—Daviess
County—Hancock
County—Henderson
County—McLean
County—Ohio
County—Union
County—Webster
Lake Cumberland Catchment Area
County—Adair
County—Casey
County—Clinton
County—Cumberland
County—Green
County—McCreary
County—Pulaski
County—Russell
County—Taylor
County—Wayne
Mountain
County—Floyd
County—Johnson
County—Magoffin
County—Martin
County—Pike
North Central
County—Breckinridge
County—Grayson
County—Hardin
County—Larue
County—Marion
County—Meade
County—Nelson
County—Washington
Northern Kentucky
County—Carroll
County—Gallatin
County—Grant
County—Owen
Pennyroyal
County—Caldwell
County—Christian
County—Crittenden
County—Hopkins
County—Livingston
County—Lyon
County—Muhlenberg
County—Todd
County—Trigg
Upper Kentucky River
County—Breathitt
County—Knott
County—Lee
County—Leslie
County—Letcher
County—Owsley
County—Perry
County—Wolfe
Western Kentucy
County—Ballard
County—Calloway
County—Carlisle
County—Fulton
County—Graves
County—Hickman
County—McCracken
County—Marshall

MENTAL HEALTH: Louisiana
Parish Listing

Parish Name
*St. Mary

MENTAL HEALTH: Maine
County Listing

County Name
*Aroostook
Population Group: Low Inc—MHCA 1
Cumberland
Population Group: Low Inc—Bridgton MHAa
*Franklin
Service Area: Rumford
*Oxford
Service Area: Rumford
Population Group: Low Inc—Bridgton MHAa
Penobscot
Population Group: Low Inc—MHCA 2
Population Group: Low Inc—MHCA 1
*Piscataquis
Population Group: Low Inc—MHCA 2
*Somerset
Population Group: Low Inc—MHCA 3
*Washington
Service Area: Greater Washington
Population Group: Low Inc—MHCA 1

MENTAL HEALTH: Maine
Service Area Listing

Service Area Name
Greater Washington
County—Washington
Parts:
Addison Town
Alexander Town
Baileyville Town
Baring Town
Beals Town
Beddington Town
Calais City
Centerville Town
Charlotte Town
Cherryfield Town
Codyville Plantation
Columbia Falls Town
Columbia Town
Cooper Town
Crawford Town
Cutler Town
Deblois Town
Dennysville Town
East Central Washington Unorg.
East Machias Town
Eastport City
Grand Lake Stream Plantation
Harrington Town
Jonesboro Town
Jonesport Town
Lubec Town
Machias Town
Machiasport Town
Marshfield Town
Meddybemps Town
Milbridge Town
North Washington Unorg.
Northfield Town
Passamaquoddy Indian Township Re
Passamaquoddy Pleasant Point Res
Pembroke Town
Perry Town

MENTAL HEALTH: Maine
Service Area Listing

Service Area Name
Princeton Town
Robbinston Town
Roque Bluffs Town
Steuben Town
Talmadge Town
Topsfield Town
Vanceboro Town
Waite Town
Wesley Town
Whiting Town
Whitneyville Town
Bridgton Town
Parts:
Casco Town
Harrison Town
Naples Town
Sebago Town
Denmark Town
Rumford
Parts:
Carthage Town
South Franklin Unorg.
Weld Town
County—Oxford
Parts:
Andover Town
Byron Town
Dixfield Town
Hanover Town
Mexico Town
Milton Unorg.
Peru Town
Roxbury Town
Rumford Town

MENTAL HEALTH: Maine
Population Group Listing

Population Group
Low Inc—Bridgton MHAa
County—Cumberland
County—Oxford
Low Inc—MHCA 1
County—Aroostook
Parts:
Aroostook Co
County—Penobscot
Parts:
Mt. Chase Town
Patten Town
Stacyvilletown
County—Washington
Parts:
Danforth Town
Low Inc—MHCA 2
County—Penobscot
Parts:
Carroll Town
Chester Town
Drew Town
East Millinocket Town
Kingman Town
Lee Town
Lincoln Town
Mattawamkeagtown
Medway Town
Millinocket Town
Prentiss Town
Springfield Town
Webster Town
Winn Town
Woodville Town

MENTAL HEALTH: Maine
Population Group Listing

Population Group
County—Piscataquis
Parts:
Piscataquis Co
Low Inc—MHCA 3
County—Somerset
Parts:
Somerset Co

MENTAL HEALTH: Maryland
County Listing

County Name
Baltimore City
Facility: Balt City Detention Ctr
Facility: Central Booking & Intake Facility
Facility: Md Recep & Diag Ctr
Facility: Metro Transition Ctr
*Caroline
Service Area: Mid-Shore
*Dorchester
Service Area: Mid-Shore
*Garrett
*Kent
Service Area: Northeastern Shore
*Queen Anne's
Service Area: Northeastern Shore
*Somerset
*Worcester

MENTAL HEALTH: Maryland
Service Area Listing

Service Area Name
Mid-Shore
County—Caroline
County—Dorchester
Northeastern Shore
County—Kent
County—Queen Anne's

MENTAL HEALTH: Maryland
Facility Listing

Facility Name
Balt City Detention Ctr
County—Baltimore City
Central Booking & Intake Facility
County—Baltimore City
Md Recep & Diag Ctr
County—Baltimore City
Metro Transition Ctr
County—Baltimore City

MENTAL HEALTH: Massachusetts
County Listing

County Name
Suffolk
Population Group: Homeless—Dorchester(S)
Population Group: Homeless—Roxbury(S)
Population Group: Homeless—South End(S)
Population Group: Homeless—Downtown(S)
Worcester
Population Group: Low Income—Worcester
Parts:

MENTAL HEALTH: Massachusetts
Service Area Listing

Service Area Name

Parts:
C.T. 901–906
C.T. 912–915
C.T. 918–919
C.T. 923–924
C.T. 1001
C.T. 1101.01–1101.02
Parts:
C.T. 203
C.T. 701–702
Parts:
C.T. 103
C.T. 104.02
C.T. 801–810
C.T. 812–821
C.T. 1203
C.T. 1205
Parts:
C.T. 704
C.T. 710–712
Worcester City

MENTAL HEALTH: Massachusetts
Population Group Listing

Population Group

Homeless—Dorchester(S)
County—Suffolk
Homeless—Downtown(S)
County—Suffolk
Homeless—Roxbury(S)
County—Suffolk
Homeless—South End(S)
County—Suffolk
Low Income—Worcester
County—Worcester

MENTAL HEALTH: Michigan
County Listing

County Name

*Alger
*Antrim
Service Area: Mancelona/Kalkaska
*Arenac
Population Group: Low Inc—Arenac Co
*Baraga
Service Area: Copper Country
*Benzie
Service Area: Manistee
*Branch
*Cass
*Charlevoix
*Cheboygan
*Clare
Service Area: Mt. Pleasant
*Crawford
Service Area: North Central
*Delta
*Dickinson
Service Area: Iron Mountain
*Emmet
Population Group: Low Inc—Emmet Co
*Gladwin
Service Area: Midland/Gladwin
*Gogebic
Service Area: Gogebic
*Gratiot
*Hillsdale
*Houghton
Service Area: Copper Country
*Huron

MENTAL HEALTH: Michigan
County Listing

County Name

*Iosco
Service Area: Au Sable Valley
*Iron
Service Area: Iron Mountain
*Isabella
Service Area: Mt. Pleasant
*Kalkaska
Service Area: Mancelona/Kalkaska
*Keweenaw
Service Area: Copper Country
*Lake
Service Area: Lake/Mason/Oceana
*Leelanau
*Lenawee
*Manistee
Service Area: Manistee
*Mason
Service Area: Lake/Mason/Oceana
*Mecosta
Service Area: Mt. Pleasant
*Menominee
*Midland
Service Area: Midland/Gladwin
*Missaukee
Service Area: North Central
*Montcalm
*Newaygo
*Oceana
Service Area: Lake/Mason/Oceana
*Ogemaw
Service Area: Au Sable Valley
*Ontonagon
Service Area: Copper Country
*Osceola
Service Area: Mt. Pleasant
*Oscoda
Service Area: Au Sable Valley
*Otsego
Ottawa
*Roscommon
Service Area: North Central
*Sanilac
*Schoolcraft
St. Clair
*St. Joseph
*Tuscola
Wayne
Service Area: East Detroit
Service Area: Northwest Detroit
Population Group: Low Inc—Southwest Detroit
*Wexford
Service Area: North Central

MENTAL HEALTH: Michigan
Service Area Listing

Service Area Name

Au Sable Valley
County—Iosco
County—Ogemaw
County—Oscoda
Copper Country
County—Baraga
County—Houghton
County—Keweenaw
County—Ontonagon
East Detroit
County—Wayne
Parts:
C.T. 5004–5005
C.T. 5013

MENTAL HEALTH: Michigan
Service Area Listing

Service Area Name

C.T. 5020
C.T. 5039–5045
C.T. 5121–5124
C.T. 5126
C.T. 5129
C.T. 5132–5136
C.T. 5139–5143
C.T. 5145–5157
C.T. 5161–5164
C.T. 5166–5169
Gogebic
County—Gogebic
Iron Mountain
County—Dickinson
County—Iron
Lake/Mason/Oceana
County—Lake
County—Mason
County—Oceana
Mancelona/Kalkaska
County—Antrim
County—Kalkaska
Manistee
County—Benzie
County—Manistee
Midland/Gladwin
County—Gladwin
County—Midland
Mt. Pleasant
County—Clare
County—Isabella
County—Mecosta
County—Osceola
North Central
County—Crawford
County—Missaukee
County—Roscommon
County—Wexford
Northwest Detroit
County—Wayne
Parts:
C.T. 5341–5347
C.T. 5350–5357
C.T. 5366–5367
C.T. 5371–5373
C.T. 5377–5378
C.T. 5423–5426
C.T. 5451–5454

MENTAL HEALTH: Michigan
Population Group Listing

Population Group

Low Inc—Arenac Co 3
County—Arenac
Low Inc—Emmet Co
County—Emmet
Parts:
Low Income
Low Inc—Southwest Detroit
County—Wayne
Parts:
C.T. 5209
C.T. 5211–5215
C.T. 5221–5222
C.T. 5231–5238
C.T. 5240–5243
C.T. 5251–5258
C.T. 5260–5265

MENTAL HEALTH: Minnesota
County Listing

County Name

*Aitkin
Service Area: Itasca/Koochiching
*Becker
Population Group: Low Inc—Fergus Falls
*Beltrami
Service Area: Bemidji
*Big Stone
Service Area: Montevideo
*Carlton
Population Group: Low Inc—Arrowhead
*Cass
Service Area: Bemidji
*Chippewa
Service Area: Montevideo
*Chisago
Service Area: Cambridge
*Clay
Population Group: Low Inc—Fergus Falls
*Clearwater
Service Area: Bemidji
*Cook
Population Group: Low Inc—Arrowhead
*Cottonwood
Service Area: Worthington
*Dodge
Service Area: Austin-Owatonna
*Douglas
Population Group: Low Inc—Fergus Falls
*Faribault
Service Area: Fairmount
*Freeborn
Service Area: Austin-Owatonna
*Grant
Population Group: Low Inc—Fergus Falls
*Hubbard
Service Area: Bemidji
*Isanti
Service Area: Cambridge
*Itasca
Service Area: Itasca/Koochiching
*Jackson
Service Area: Worthington
*Kanabec
Service Area: Cambridge
*Kittson
Service Area: E Grand Forks
*Koochiching
Service Area: Itasca/Koochiching
*Lac Qui Parle
Service Area: Montevideo
*Lake
Population Group: Low Inc—Arrowhead
*Lake Of The Woods
Service Area: Bemidji
*Le Sueur
Service Area: Austin-Owatonna
*Lincoln
Service Area: Marshall
*Lyon
Service Area: Marshall
*Mahnomen
Service Area: E Grand Forks
*Marshall
Service Area: E Grand Forks
*Martin
Service Area: Fairmount
*Mille Lacs
Service Area: Cambridge
*Mower
Service Area: Austin-Owatonna
*Murray
Service Area: Marshall

MENTAL HEALTH: Minnesota
County Listing

County Name

*Nobles
Service Area: Worthington
*Norman
Service Area: E Grand Forks
*Otter Tail
Population Group: Low Inc—Fergus Falls
*Pennington
Service Area: E Grand Forks
*Pine
Service Area: Cambridge
*Pipestone
Service Area: Worthington
*Polk
Service Area: E Grand Forks
*Pope
Population Group: Low Inc—Fergus Falls
*Red Lake
Service Area: E Grand Forks
*Redwood
Service Area: Marshall
*Renville
Service Area: Montevideo
*Rice
Service Area: Austin-Owatonna
*Rock
Service Area: Worthington
*Roseau
Service Area: Bemidji
St. Louis
Population Group: Low Inc—Arrowhead
*Steele
Service Area: Austin-Owatonna
*Stevens
Population Group: Low Inc—Fergus Falls
*Swift
Service Area: Montevideo
*Traverse
Population Group: Low Inc—Fergus Falls
*Waseca
Service Area: Austin-Owatonna
*Watonwan
Service Area: Fairmount
*Wilkin
Population Group: Low Inc—Fergus Falls
*Yellow Medicine
Service Area: Marshall

MENTAL HEALTH: Minnesota
Service Area Listing

Service Area Name

Austin-Owatonna
County—Dodge
County—Freeborn
County—Le Sueur
County—Mower
County—Rice
County—Steele
County—Waseca
Bemidji
County—Beltrami
County—Cass
County—Clearwater
County—Hubbard
County—Lake Of The Woods
County—Roseau
Cambridge
County—Chisago
County—Isanti
County—Kanabec
County—Mille Lacs
County—Pine

MENTAL HEALTH: Minnesota
Service Area Listing

Service Area Name

E Grand Forks
County—Kittson
County—Mahnomen
County—Marshall
County—Norman
County—Pennington
County—Polk
County—Red Lake
Fairmount
County—Faribault
County—Martin
County—Watonwan
Itasca/Koochiching
County—Aitkin
County—Itasca
County—Koochiching
Marshall
County—Lincoln
County—Lyon
County—Murray
County—Redwood
County—Yellow Medicine
Montevideo
County—Big Stone
County—Chippewa
County—Lac Qui Parle
County—Renville
County—Swift
Worthington
County—Cottonwood
County—Jackson
County—Nobles
County—Pipestone
County—Rock

MENTAL HEALTH: Minnesota
Population Group Listing

Population Group

Low Inc—Arrowhead
County—Carlton
County—Cook
County—Lake
County—St. Louis
Low Inc—Fergus Falls
County—Becker
County—Clay
County—Douglas
County—Grant
County—Otter Tail
County—Pope
County—Stevens
County—Traverse
County—Wilkin

MENTAL HEALTH: Mississippi
County Listing

County Name

*Adams
Service Area: Catchment Area #11
*Alcorn
Service Area: Catchment Area #4
*Amite
Service Area: Catchment Area #11
*Attala
Service Area: Catchment Area #6
*Benton
Service Area: Catchment Area #3
*Bolivar
Service Area: Catchment Area #5
*Calhoun

MENTAL HEALTH: Mississippi
County Listing

County Name

Service Area: Catchment Area #2
*Carroll
Service Area: Catchment Area #6
*Chickasaw
Service Area: Catchment Area #3
*Choctaw
Service Area: Catchment Area #7
*Claiborne
Service Area: Catchment Area #11
*Clarke
Service Area: Catchment Area #10
*Clay
Service Area: Catchment Area #7
*Coahoma
Service Area: Catchment Area #1
*Covington
Service Area: Catchment Area #12
*Desoto
Service Area: Catchment Area #2
*Forrest
Service Area: Catchment Area #12
*Franklin
Service Area: Catchment Area #11
*George
Service Area: Catchment Area #14
*Greene
Service Area: Catchment Area #12
*Grenada
Service Area: Catchment Area #6
*Hancock
Service Area: Catchment Area #13
*Harrison
Service Area: Catchment Area #13
*Holmes
Service Area: Catchment Area #6
*Humphreys
Service Area: Catchment Area #6
*Issaquena
Service Area: Catchment Area #5
*Itawamba
Service Area: Catchment Area #3
*Jackson
Service Area: Catchment Area #14
*Jasper
Service Area: Catchment Area #10
*Jefferson
*Jefferson Davis
Service Area: Catchment Area #11
Service Area: Catchment Area #12
*Jones
Service Area: Catchment Area #12
*Kemper
Service Area: Catchment Area #10
*Lafayette
Service Area: Catchment Area #2
*Lamar
Service Area: Catchment Area #12
*Lauderdale
Service Area: Catchment Area #10
Facility: East Ms State Hospital
*Lawrence
Service Area: Catchment Area #11
*Leake
Service Area: Catchment Area #10
*Lee
Service Area: Catchment Area #3
*Leflore
Service Area: Catchment Area #6
*Lincoln
Service Area: Catchment Area #11
*Lowndes
Service Area: Catchment Area #7

MENTAL HEALTH: Mississippi
County Listing

County Name

*Marion
Service Area: Catchment Area #12
*Marshall
Service Area: Catchment Area #2
*Monroe
Service Area: Catchment Area #3
*Montgomery
Service Area: Catchment Area #6
*Neshoba
Service Area: Catchment Area #10
*Newton
Service Area: Catchment Area #10
*Noxubee
Service Area: Catchment Area #7
*Oktibbeha
Service Area: Catchment Area #7
*Panola
Service Area: Catchment Area #2
*Pearl River
Service Area: Catchment Area #13
*Perry
Service Area: Catchment Area #12
*Pike
Service Area: Catchment Area #11
*Pontotoc
Service Area: Catchment Area #3
*Prentiss
Service Area: Catchment Area #4
*Quitman
Service Area: Catchment Area #1
*Scott
Service Area: Catchment Area #10
*Sharkey
Service Area: Catchment Area #5
*Smith
Service Area: Catchment Area #10
*Stone
Service Area: Catchment Area #13
*Sunflower
Service Area: Catchment Area #6
*Tallahatchie
Service Area: Catchment Area #1
*Tate
Service Area: Catchment Area #2
*Tippah
Service Area: Catchment Area #4
*Tishomingo
Service Area: Catchment Area #4
*Tunica
Service Area: Catchment Area #1
*Union
Service Area: Catchment Area #3
*Walthall
Service Area: Catchment Area #11
*Warren
Service Area: Catchment Area #15
*Washington
Service Area: Catchment Area #5
*Wayne
Service Area: Catchment Area #12
*Webster
Service Area: Catchment Area #7
*Wilkinson
Service Area: Catchment Area #11
*Winston
Service Area: Catchment Area #7
*Yalobusha
Service Area: Catchment Area #2
*Yazoo
Service Area: Catchment Area #15

MENTAL HEALTH: Mississippi
Service Area Listing

Service Area Name

Catchment Area #1
County—Coahoma
County—Quitman
County—Tallahatchie
County—Tunica
Catchment Area #10
County—Clarke
County—Jasper
County—Kemper
County—Lauderdale
County—Leake
County—Neshoba
County—Newton
County—Scott
County—Smith
Catchment Area #11
County—Adams
County—Amite
County—Claiborne
County—Franklin
County—Jefferson
County—Lawrence
County—Lincoln
County—Pike
County—Walthall
County—Wilkinson
Catchment Area #12
County—Covington
County—Forrest
County—Greene
County—Jefferson Davis
County—Jones
County—Lamar
County—Marion
County—Perry
County—Wayne
Catchment Area #13
County—Hancock
County—Harrison
County—Pearl River
County—Stone
Catchment Area #14
County—George
County—Jackson
Catchment Area #15
County—Warren
County—Yazoo
Catchment Area #2
County—Calhoun
County—Desoto
County—Lafayette
County—Marshall
County—Panola
County—Tate
County—Yalobusha
Catchment Area #3
County—Benton
County—Chickasaw
County—Itawamba
County—Lee
County—Monroe
County—Pontotoc
County—Union
Catchment Area #4
County—Alcorn
County—Prentiss
County—Tippah
County—Tishomingo
Catchment Area #5
County—Bolivar
County—Issaquena
County—Sharkey

MENTAL HEALTH: Mississippi
Service Area Listing

Service Area Name

County—Washington
Catchment Area #6
County—Attala
County—Carroll
County—Grenada
County—Holmes
County—Humphreys
County—Leflore
County—Montgomery
County—Sunflower
Catchment Area #7
County—Choctaw
County—Clay
County—Lowndes
County—Noxubee
County—Oktibbeha
County—Webster
County—Winston

MENTAL HEALTH: Mississippi
Facility Listing

Facility Name

East Ms State Hospital
County—Lauderdale

MENTAL HEALTH: Missouri
County Listing

County Name

*Adair
Service Area: Hannibal
*Andrew
Population Group: Low Inc—St. Joseph Catchment Area
*Atchison
Population Group: Low Inc—St. Joseph Catchment Area
*Audrain
Service Area: Mexico
*Barry
Service Area: Nevada
*Barton
Population Group: Low Inc—Joplin Catchment Area
*Bates
Service Area: Nevada
*Benton
Service Area: Nevada
*Bollinger
Service Area: Cape Girardeau
*Buchanan
Population Group: Low Inc—St. Joseph Catchment Area
*Butler
Service Area: Poplar Bluff
*Caldwell
Service Area: Chillicothe
*Callaway
Service Area: Mexico
*Camden
Service Area: Jefferson City
*Cape Girardeau
Service Area: Cape Girardeau
*Carter
Service Area: Poplar Bluff
*Cass
Service Area: Warrensburg
*Cedar
Service Area: Nevada
Christian
Population Group: Low Inc—Springfield

MENTAL HEALTH: Missouri
County Listing

County Name

*Clark
Service Area: Hannibal
*Clinton
Population Group: Low Inc—St. Joseph Catchment Area
*Cole
Service Area: Jefferson City
*Crawford
Service Area: Rolla
*Dade
Service Area: Nevada
*Dallas
Population Group: Low Inc—Springfield
*Daviess
Service Area: Chillicothe
*Dekalb
Population Group: Low Inc—St. Joseph Catchment Area
*Dent
Service Area: Rolla
*Douglas
Service Area: West Plains
*Dunklin
Service Area: Poplar Bluff
*Gasconade
Service Area: Rolla
*Gentry
Population Group: Low Inc—St. Joseph Catchment Area
Greene
Population Group: Low Inc—Springfield
*Grundy
Service Area: Chillicothe
*Harrison
Service Area: Chillicothe
*Henry
Service Area: Nevada
*Hickory
Service Area: Nevada
*Holt
Population Group: Low Inc—St. Joseph Catchment Area
*Howell
Service Area: West Plains
*Iron
Service Area: Rolla
*Jasper
Population Group: Low Inc—Joplin Catchment Area
*Jefferson
Service Area: Cape Girardeau
*Johnson
Service Area: Warrensburg
*Knox
Service Area: Hannibal
*Laclede
Service Area: Jefferson City
*Lafayette
Service Area: Warrensburg
*Lawrence
Service Area: Nevada
*Lewis
Service Area: Hannibal
*Linn
Service Area: Chillicothe
*Livingston
Service Area: Chillicothe
*Macon
Service Area: Hannibal
*Madison
Service Area: Cape Girardeau
*Maries

MENTAL HEALTH: Missouri
County Listing

County Name

Service Area: Rolla
*Marion
Service Area: Hannibal
*McDonald
Population Group: Low Inc—Joplin Catchment Area
*Mercer
Service Area: Chillicothe
*Miller
Service Area: Jefferson City
*Mississippi
Service Area: Sikeston
*Monroe
Service Area: Mexico
*Montgomery
Service Area: Mexico
*Morgan
Service Area: Columbia
*New Madrid
Service Area: Sikeston
*Newton
Population Group: Low Inc—Joplin Catchment Area
*Nodaway
Population Group: Low Inc—St. Joseph Catchment Area
*Oregon
Service Area: West Plains
*Osage
Service Area: Jefferson City
*Ozark
Service Area: West Plains
*Pemiscot
Service Area: Poplar Bluff
*Perry
Service Area: Cape Girardeau
*Pettis
Service Area: Columbia
*Phelps
Service Area: Rolla
*Pike
Service Area: Mexico
*Polk
Population Group: Low Inc—Springfield
*Pulaski
Service Area: Jefferson City
*Putnam
Service Area: Chillicothe
*Ralls
Service Area: Mexico
*Reynolds
Service Area: Poplar Bluff
*Ripley
Service Area: Poplar Bluff
*Saline
Service Area: Columbia
*Schuyler
Service Area: Hannibal
*Scotland
Service Area: Hannibal
*Scott
Service Area: Sikeston
*Shannon
Service Area: West Plains
*Shelby
Service Area: Hannibal
*St. Clair
Service Area: Nevada
*St. Francois
Service Area: Rolla
*Ste. Genevieve
Service Area: Cape Girardeau

MENTAL HEALTH: Missouri
County Listing

County Name

*Stoddard
Service Area: Sikeston
*Stone
Population Group: Low Inc—Springfield
*Sullivan
Service Area: Chillicothe
*Taney
Population Group: Low Inc—Springfield
*Texas
Service Area: West Plains
*Vernon
Service Area: Nevada
*Washington
Service Area: Rolla
*Wayne
Service Area: Poplar Bluff
Webster
Population Group: Low Inc—Springfield
*Worth
Population Group: Low Inc—St. Joseph Catchment Area
*Wright
Service Area: West Plains

MENTAL HEALTH: Missouri
Service Area Listing

Service Area Name

Cape Girardeau
County—Bollinger
County—Cape Girardeau
County—Jefferson
County—Madison
County—Perry
County—Ste. Genevieve
Chillicothe
County—Caldwell
County—Daviess
County—Grundy
County—Harrison
County—Linn
County—Livingston
County—Mercer
County—Putnam
County—Sullivan
Columbia
County—Morgan
County—Pettis
County—Saline
Hannibal
County—Adair
County—Clark
County—Knox
County—Lewis
County—Macon
County—Marion
County—Schuyler
County—Scotland
County—Shelby
Jefferson City
County—Camden
County—Cole
County—Laclede
County—Miller
County—Osage
County—Pulaski
Mexico
County—Audrain
County—Callaway
County—Monroe
County—Montgomery
County—Pike

MENTAL HEALTH: Missouri
Service Area Listing

Service Area Name

County—Ralls
Nevada
County—Barry
County—Bates
County—Benton
County—Cedar
County—Dade
County—Henry
County—Hickory
County—Lawrence
County—St. Clair
County—Vernon
Poplar Bluff
County—Butler
County—Carter
County—Dunklin
County—Pemiscot
County—Reynolds
County—Ripley
County—Wayne
Rolla
County—Crawford
County—Dent
County—Gasconade
County—Iron
County—Maries
County—Phelps
County—St. Francois
County—Washington
Sikeston
County—Mississippi
County—New Madrid
County—Scott
County—Stoddard
Warrensburg
County—Cass
County—Johnson
County—Lafayette
West Plains
County—Douglas
County—Howell
County—Oregon
County—Ozark
County—Shannon
County—Texas
County—Wright

MENTAL HEALTH: Missouri
Population Group Listing

Population Group

Low Inc—Joplin Catchment Area
County—Barton
County—Jasper
County—McDonald
County—Newton
Low Inc—Springfield
County—Christian
County—Dallas
County—Greene
County—Polk
County—Stone
County—Taney
County—Webster
Low Inc—St. Joseph Catchment Area
County—Andrew
County—Atchison
County—Buchanan
County—Clinton
County—Dekalb
County—Gentry
County—Holt

MENTAL HEALTH: Missouri
Population Group Listing

Population Group

County—Nodaway
County—Worth

MENTAL HEALTH: Montana
County Listing

County Name

*Beaverhead
*Big Horn
*Blaine
Service Area: North-Central Montana
*Broadwater
*Carbon
*Carter
Service Area: Eastern Montana
*Chouteau
Service Area: North-Central Montana
*Custer
Service Area: Eastern Montana
*Daniels
Service Area: Eastern Montana
*Dawson
Service Area: Eastern Montana
*Deer Lodge
Service Area: Silver Bow/Deer Lodge
Facility: Mt State Hosp.—Warm Springs
*Fallon
Service Area: Eastern Montana
*Fergus
Service Area: Lewistown
*Garfield
Service Area: Eastern Montana
*Glacier
Service Area: North-Central Montana
*Golden Valley
*Granite
*Hill
Service Area: North-Central Montana
*Jefferson
*Judith Basin
Service Area: Lewistown
*Lake
*Liberty
Service Area: North-Central Montana
*Lincoln
*Madison
*McCone
Service Area: Eastern Montana
*Meagher
*Mineral
*Musselshell
*Park
*Petroleum
Service Area: Lewistown
*Phillips
Service Area: Eastern Montana
*Pondera
Service Area: North-Central Montana
*Powder River
Service Area: Eastern Montana
*Powell (g)
Facility: Montana State Prison
*Prairie
Service Area: Eastern Montana
*Ravalli
*Richland
Service Area: Eastern Montana
*Roosevelt
Service Area: Eastern Montana
*Rosebud
Service Area: Eastern Montana
*Sanders

MENTAL HEALTH: Montana
County Listing

County Name

*Sheridan
Service Area: Eastern Montana
*Silver Bow
Service Area: Silver Bow/Deer Lodge
*Stillwater
*Sweet Grass
*Teton
Service Area: North-Central Montana
*Toole
Service Area: North-Central Montana
*Treasure
Service Area: Eastern Montana
*Valley
Service Area: Eastern Montana
*Wheatland
Service Area: Lewistown
*Wibaux
Service Area: Eastern Montana

MENTAL HEALTH: Montana
Service Area Listing

Service Area Name

Eastern Montana
County—Carter
County—Custer
County—Daniels
County—Dawson
County—Fallon
County—Garfield
County—McCone
County—Phillips
County—Powder River
County—Prairie
County—Richland
County—Roosevelt
County—Rosebud
County—Sheridan
County—Treasure
County—Valley
County—Wibaux
Lewistown
County—Fergus
County—Judith Basin
County—Petroleum
County—Wheatland
North-Central Montana
County—Blaine
County—Chouteau
County—Glacier
County—Hill
County—Liberty
County—Pondera
County—Teton
County—Toole
Silver Bow/Deer Lodge
County—Deer Lodge
County—Silver Bow

MENTAL HEALTH: Montana
Facility Listing

Facility Name

Montana State Prison
County—Powell
Mt State Hosp.—Warm Springs
County—Deer Lodge

MENTAL HEALTH: Nebraska
County Listing

County Name

*Antelope
Service Area: Catchment Area 4
*Arthur
Service Area: Catchment Area 2
*Banner
Service Area: Catchment Area 1
*Boone
Service Area: Catchment Area 4
*Box Butte
Service Area: Catchment Area 1
*Boyd
Service Area: Catchment Area 4
*Brown
Service Area: Catchment Area 4
*Burt
Service Area: Catchment Area 4
*Butler
Service Area: Catchment Area 5
*Cedar
Service Area: Catchment Area 4
*Chase
Service Area: Catchment Area 2
*Cherry
Service Area: Catchment Area 4
*Cheyenne
Service Area: Catchment Area 1
*Colfax
Service Area: Catchment Area 4
*Cuming
Service Area: Catchment Area 4
Dakota
Service Area: Catchment Area 4
*Dawes
Service Area: Catchment Area 1
*Dawson
Service Area: Catchment Area 2
*Deuel
Service Area: Catchment Area 1
*Dixon
Service Area: Catchment Area 4
*Dundy
Service Area: Catchment Area 2
*Fillmore
Service Area: Catchment Area 5
*Frontier
Service Area: Catchment Area 2
*Gage
Service Area: Catchment Area 5
*Garden
Service Area: Catchment Area 1
*Gosper
Service Area: Catchment Area 2
*Grant
Service Area: Catchment Area 2
*Hayes
Service Area: Catchment Area 2
*Hitchcock
Service Area: Catchment Area 2
*Holt
Service Area: Catchment Area 4
*Hooker
Service Area: Catchment Area 2
*Jefferson
Service Area: Catchment Area 5
*Johnson
Service Area: Catchment Area 5
*Keith
Service Area: Catchment Area 2
*Keya Paha
Service Area: Catchment Area 4
*Kimball
Service Area: Catchment Area 1
*Knox
Service Area: Catchment Area 4
Lancaster
Service Area: Catchment Area 5
*Lincoln
Service Area: Catchment Area 2
*Logan
Service Area: Catchment Area 2
*Madison
Service Area: Catchment Area 4
*Morrill
Service Area: Catchment Area 1
*MCPherson
Service Area: Catchment Area 2
*Nance
Service Area: Catchment Area 4
*Nemaha
Service Area: Catchment Area 5
*Otoe
Service Area: Catchment Area 5
*Pawnee
Service Area: Catchment Area 5
*Perkins
Service Area: Catchment Area 2
*Pierce
Service Area: Catchment Area 4
*Platte
Service Area: Catchment Area 4
*Polk
Service Area: Catchment Area 5
*Red Willow
Service Area: Catchment Area 2
*Richardson
Service Area: Catchment Area 5
*Rock
Service Area: Catchment Area 4
*Saline
Service Area: Catchment Area 5
*Saunders
Service Area: Catchment Area 5
*Scotts Bluff
Service Area: Catchment Area 1
*Seward
Service Area: Catchment Area 5
*Sheridan
Service Area: Catchment Area 1
*Sioux
Service Area: Catchment Area 1
*Stanton
Service Area: Catchment Area 4
*Thayer
Service Area: Catchment Area 5
*Thomas
Service Area: Catchment Area 2
*Thurston
Service Area: Catchment Area 4
*Wayne
Service Area: Catchment Area 4
*York
Service Area: Catchment Area 5

MENTAL HEALTH: Nebraska
Service Area Listing

Service Area Name

Catchment Area 1
County—Banner
County—Box Butte
County—Cheyenne
County—Dawes
County—Deuel
County—Garden
County—Kimball

MENTAL HEALTH: Nebraska
Service Area Listing

Service Area Name

County—Morrill
County—Scotts Bluff
County—Sheridan
County—Sioux
Catchment Area 2
County—Arthur
County—Chase
County—Dawson
County—Dundy
County—Frontier
County—Gosper
County—Grant
County—Hayes
County—Hitchcock
County—Hooker
County—Keith
County—Lincoln
County—Logan
County—MCPherson
County—Perkins
County—Red Willow
County—Thomas
Catchment Area 4
County—Antelope
County—Boone
County—Boyd
County—Brown
County—Burt
County—Cedar
County—Cherry
County—Colfax
County—Cuming
County—Dakota
County—Dixon
County—Holt
County—Keya Paha
County—Knox
County—Madison
County—Nance
County—Pierce
County—Platte
County—Rock
County—Stanton
County—Thurston
County—Wayne
Catchment Area 5
County—Butler
County—Fillmore
County—Gage
County—Jefferson
County—Johnson
County—Lancaster
County—Nemaha
County—Otoe
County—Pawnee
County—Polk
County—Richardson
County—Saline
County—Saunders
County—Seward
County—Thayer
County—York

MENTAL HEALTH: Nevada
County Listing

County Name

*Churchill
Clark
Service Area: Mesquite
Service Area: Western Clark County
*Elko

MENTAL HEALTH: Nevada
County Listing

County Name

*Esmeralda
*Eureka
*Humboldt
*Lander
*Lincoln
*Lyon
*Mineral
*Nye
*Pershing
*White Pine

MENTAL HEALTH: Nevada
Service Area Listing

Service Area Name

Mesquite
County—Clark
Parts:
C.T. 56.02–56.03
Western Clark County
County—Clark
Parts:
C.T. 57
C.T. 58.98
C.T. 59

MENTAL HEALTH: New Hampshire
County Listing

County Name

*Carroll
Service Area: Mental Hlth Region I
*Coos
Service Area: Mental Hlth Region I
*Grafton
Service Area: Eastern Grafton (Reg. III)
Service Area: Mental Hlth Region I

MENTAL HEALTH: New Hampshire
Service Area Listing

Service Area Name

Eastern Grafton (Reg. III)
County—Grafton
Parts:
Alexandria Town
Ashland Town
Bridgewater Town
Bristol Town
Campton Town
Ellsworth Town
Groton Town
Hebron Town
Holderness Town
Plymouth Town
Rumney Town
Thornton Town
Wentworth Town
Mental Hlth Region I
County—Carroll
County—Coos
County—Grafton
Parts:
Bath Town
Benton Town
Bethlehem Town
Easton Town
Franconia Town
Haverhill Town
Landaff Town
Lincoln Town
Lisbon Town

MENTAL HEALTH: New Hampshire
Service Area Listing

Service Area Name

Littleton Town
Lyman Town
Monroe Town
Piermont Town
Sugar Hill Town
Warren Town
Waterville Valley Town
Woodstock Town

MENTAL HEALTH: New Jersey
County Listing

County Name

Passaic
Service Area: City Of Passaic
*Salem
Population Group: Low Inc/MSFW Salem

MENTAL HEALTH: New Jersey
Service Area Listing

Service Area Name

City Of Passaic
County—Passaic
Parts:
Passaic City

MENTAL HEALTH: New Jersey
Population Group Listing

Population Group

Low Inc/MSFW Salem
County—Salem

MENTAL HEALTH: New Mexico
County Listing

County Name

Bernalillo
Service Area: North Valley
Service Area: Southwest Valley
*Catron
Service Area: Border MH Service Area
*Chaves
Service Area: Southeastern MH Service Area
*Cibola
*Curry
Service Area: Plains MH Service Area
*Debaca
Service Area: Plains MH Service Area
*Eddy
Service Area: Southeastern MH Service Area
*Grant
Service Area: Border MH Service Area
*Guadalupe
Service Area: Plains MH Service Area
*Harding
Service Area: Plains MH Service Area
*Hidalgo
Service Area: Border MH Service Area
*Lea
Service Area: Southeastern MH Service Area
*Lincoln
Service Area: Southeastern MH Service Area
*Luna
Service Area: Border MH Service Area
*McKinley
Service Area: Catchment Area #1

MENTAL HEALTH: New Mexico
County Listing

County Name

*Otero
Service Area: Southeastern MH Service Area
*Quay
Service Area: Plains MH Service Area
*Rio Arriba
*Roosevelt
Service Area: Plains MH Service Area
*San Juan
Service Area: Catchment Area #1
*San Miguel
Facility: Las Vegas Medical Center
Sandoval
Service Area: Northern Sandoval
*Sierra
Service Area: South Central MH Service Area
*Socorro
Service Area: South Central MH Service Area
*Taos
*Torrance
*Union
Service Area: Plains MH Service Area
Valencia

MENTAL HEALTH: New Mexico
Service Area Listing

Service Area Name

Border MH Service Area
County—Catron
County—Grant
County—Hidalgo
County—Luna
Catchment Area #1
County—McKinley
County—San Juan
North Valley
County—Bernalillo
Parts:
C.T. 29
C.T. 30.01–30.02
C.T. 31
C.T. 32.01–32.02
C.T. 35.01–35.02
C.T. 36
Northern Sandoval
County—Sandoval
Parts:
Cuba CCD
Jemez CCD
Santo Domingo CCD
Plains MH Service Area
County—Curry
County—Debaca
County—Guadalupe
County—Harding
County—Quay
County—Roosevelt
County—Union
South Central MH Service Area
County—Sierra
County—Socorro
Southeastern MH Service Area
County—Chaves
County—Eddy
County—Lea
County—Lincoln
County—Otero
Southwest Valley
County—Bernalillo

MENTAL HEALTH: New Mexico
Service Area Listing

Service Area Name

Parts:
C.T. 23
C.T. 24.01–24.02
C.T. 43
C.T. 44.01–44.02
C.T. 45.01–45.02
C.T. 46.02–46.04

MENTAL HEALTH: New Mexico
Facility Listing

Facility Name

Las Vegas Medical Center 4
County—San Miguel

MENTAL HEALTH: New York
County Listing

County Name

*Allegany
Bronx
Facility: NYC Corr. Fac./Rikers Island
*Cattaraugus
Cayuga
Chautauqua
*Chenango
*Columbia
*Delaware
Erie
Service Area: P.S. 84 Neighborhood
*Essex
*Franklin
*Fulton
*Jefferson
Kings
Facility: Woodhull Mental Health
*Lewis
Livingston
Monroe
Service Area: Jordan (Rochester)
New York
Service Area: Chinatown/Lower Manhattan
Facility: Bellevue Hosp Ctr
Facility: Callen/Lorde Mental Health Clinic
Facility: Ft. Washington—Proj Renewal
Facility: Greenberg Counseling Center
Facility: Holland House—Proj Renewal
Facility: New Providence—Proj Renewal
Facility: Psych Outreach To Homeless
Facility: Renewal On Clinton
Facility: World Trade Center
Facility: Youth Counseling League
*Otsego
Schoharie
*Schuyler
*Seneca
*St. Lawrence
Wayne

MENTAL HEALTH: New York
Service Area Listing

Service Area Name

Chinatown/Lower Manhattan
County—New York
Parts:
C.T. 2.01–2.02
C.T. 6
C.T. 8
C.T. 10.01–10.02
C.T. 12
C.T. 14.01–14.02

MENTAL HEALTH: New York
Service Area Listing

Service Area Name

C.T. 15.01
C.T. 16
C.T. 18
C.T. 22.01
C.T. 25
C.T. 27
C.T. 29
C.T. 30.01
C.T. 41
Jordan (Rochester)
County—Monroe
Parts:
C.T. 7
C.T. 13–15
C.T. 39
C.T. 43
C.T. 48–53
C.T. 55–56
C.T. 80
C.T. 90–92
C.T. 93.01–93.02
C.T. 94.01–94.03
P.S. 84 Neighborhood
County—Erie
Parts:
C.T. 27.02
C.T. 29
C.T. 32.01–32.02
C.T. 33.01–33.02
C.T. 34–36
C.T. 39.01–39.02
C.T. 40.01–40.02
C.T. 41–42
C.T. 44.02
C.T. 52.02
C.T. 64

MENTAL HEALTH: New York
Facility Listing

Facility Name

Bellevue Hosp Ctr
County—New York
Callen/Lorde Mental Health Clinic
County—New York
Ft. Washington—Proj Renewal
County—New York
Greenberg Counseling Center
County—New York
Holland House—Proj Renewal
County—New York
New Providence—Proj Renewal
County—New York
NYC Corr. Fac./Rikers Island
County—Bronx
Psych Outreach To Homeless
County—New York
Renewal On Clinton
County—New York
Woodhull Mental Health
County—Kings
World Trade Center
County—New York
Youth Counseling League
County—New York

MENTAL HEALTH: North Carolina
County Listing

County Name

*Beaufort
Service Area: Tideland

MENTAL HEALTH: North Carolina
County Listing

County Name

*Bertie
Service Area: Roanoke-Chowan
*Bladen
Service Area: Southeast Regional
*Brunswick
Burke
Facility: Broughton Hospital
Caldwell
*Camden
Service Area: Albemarle
*Cherokee
Service Area: Smokey Mountain
*Chowan
Service Area: Albemarle
*Clay
Service Area: Smokey Mountain
*Columbus
Service Area: Southeast Regional
*Currituck
Service Area: Albemarle
*Dare
Service Area: Albemarle
*Duplin
Service Area: Duplin-Sampson
*Edgecombe
Population Group: Low Inc—Edgecombe/Nash
*Gates
Service Area: Roanoke-Chowan
*Graham
Service Area: Smokey Mountain
*Halifax
Service Area: Halifax MHCA
*Haywood
Service Area: Smokey Mountain
*Hertford
Service Area: Roanoke-Chowan
*Hyde
Service Area: Tideland
*Jackson
Service Area: Smokey Mountain
*Macon
Service Area: Smokey Mountain
*Martin
Service Area: Tideland
*Nash
Population Group: Low Inc—Edgecombe/Nash
*Northampton
Service Area: Roanoke-Chowan
*Pasquotank
Service Area: Albemarle
*Pender
*Pender
Population Group: Low Inc—Pender Co
Population Group: Low Inc—Pender Co
*Perquimans
Service Area: Albemarle
*Robeson
Service Area: Southeast Regional
*Sampson
Service Area: Duplin-Sampson
*Scotland
Service Area: Southeast Regional
*Surry
Service Area: Surry-Yadkin
*Swain
Service Area: Smokey Mountain
*Tyrrell
Service Area: Tideland
*Vance
Facility: FCI—Butner

MENTAL HEALTH: North Carolina
County Listing

County Name

*Washington
Service Area: Tideland
*Yadkin
Service Area: Surry-Yadkin

MENTAL HEALTH: North Carolina
Service Area Listing

Service Area Name

Albemarle
County—Camden
County—Chowan
County—Currituck
County—Dare
County—Pasquotank
County—Perquimans
Duplin-Sampson
County—Duplin
County—Sampson
Halifax MHCA
County—Halifax
Roanoke-Chowan
County—Bertie
County—Gates
County—Hertford
County—Northampton
Smokey Mountain
County—Cherokee
County—Clay
County—Graham
County—Haywood
County—Jackson
County—Macon
County—Swain
Southeast Regional
County—Bladen
County—Columbus
County—Robeson
County—Scotland
Surry-Yadkin
County—Surry
County—Yadkin
Tideland
County—Beaufort
County—Hyde
County—Martin
County—Tyrrell
County—Washington

MENTAL HEALTH: North Carolina
Population Group Listing

Population Group

Low Inc—Edgecombe/Nash
County—Edgecombe
County—Nash
Low Inc—Pender Co
County—Pender

MENTAL HEALTH: North Carolina
Facility Listing

Facility Name

Broughton Hospital
County—Burke
FCI—Butner
County—Vance

MENTAL HEALTH: North Dakota
County Listing

County Name

*Adams

MENTAL HEALTH: North Dakota
County Listing

County Name

*Barnes
Service Area: Jamestown (Ca 38004)
*Benson
Service Area: Devils Lake Catchment Area
*Billings
*Bottineau
*Bowman
*Burke
Cass
Facility: Family Health Care Center
Facility: SE Human Service Center
*Cavalier
Service Area: Devils Lake Catchment Area
*Dickey
Service Area: Jamestown (Ca 38004)
*Divide
*Dunn
*Eddy
Service Area: Devils Lake Catchment Area
*Emmons
*Foster
Service Area: Jamestown (Ca 38004)
*Golden Valley
*Grant
*Griggs
Service Area: Jamestown (Ca 38004)
*Hettinger
*Kidder
*Lamoure
Service Area: Jamestown (Ca 38004)
*Logan
Service Area: Jamestown (Ca 38004)
*McIntosh
Service Area: Jamestown (Ca 38004)
*McKenzie
*McLean
*Mercer
*Mountrail
*Nelson
*Oliver
*Pembina
*Pierce
*Ramsey
Service Area: Devils Lake Catchment Area
*Ransom
*Renville
*Richland
*Rolette
Service Area: Devils Lake Catchment Area
*Sargent
*Sheridan
*Sioux
*Slope
*Steele
*Stutsman
Service Area: Jamestown (Ca 38004)
Facility: North Dakota State Hosp
*Towner
Service Area: Devils Lake Catchment Area
*Traill
*Walsh
*Wells
Service Area: Jamestown (Ca 38004)
*Williams
Facility: Northwest Human Service Ctr

MENTAL HEALTH: North Dakota
Service Area Listing

Service Area Name

Devils Lake Catchment Area
County—Benson

MENTAL HEALTH: North Dakota
Service Area Listing

Service Area Name

County—Cavalier
County—Eddy
County—Ramsey
County—Rolette
County—Towner
Jamestown (Ca 38004)
County—Barnes
County—Dickey
County—Foster
County—Griggs
County—Lamoure
County—Logan
County—McIntosh
County—Stutsman
County—Wells

MENTAL HEALTH: North Dakota
Facility Listing

Facility Name

Family Health Care Center
County—Cass
North Dakota State Hosp
County—Stutsman
Northwest Human Service Ctr
County—Williams
SE Human Service Center
County—Cass

MENTAL HEALTH: Ohio
County Listing

County Name

*Adams
*Ashtabula
Facility: Lake Erie Corr Inst
*Athens
Service Area: Catchment Area #33
*Belmont
Service Area: Catchment Area #8
*Brown
*Clinton
Columbiana
Crawford
Cuyahoga
Service Area: West Side Cleveland Ca
Facility: Cleveland Psych Inst
*Gallia
Service Area: Catchment Area #35
*Harrison
Service Area: Catchment Area #8
*Hocking
Service Area: Catchment Area #33
*Holmes
Service Area: Wayne/Holmes (C.A. 53)
*Jackson
Service Area: Catchment Area #35
Lawrence
Lorain
Facility: Grafton Corr Fac
*Marion
*Meigs
Service Area: Catchment Area #35
*Monroe
Service Area: Catchment Area #8
*Scioto (g)
Facility: S Ohio Corr Fac
Stark
Facility: Massillon State Hosp
*Vinton
Service Area: Catchment Area #33
*Wayne
Service Area: Wayne/Holmes (C.A. 53)

MENTAL HEALTH: Ohio
Service Area Listing

Service Area Name

Catchment Area #33
County—Athens
County—Hocking
County—Vinton
Catchment Area #35
County—Gallia
County—Jackson
County—Meigs
Catchment Area #8
County—Belmont
County—Harrison
County—Monroe
Wayne/Holmes (C.A. 53)
County—Holmes
County—Wayne
West Side Cleveland Ca
County—Cuyahoga
Parts:
C.T. 1011.01
C.T. 1012–1019
C.T. 1021.01–1021.02
C.T. 1022–1023
C.T. 1024.01–1024.02
C.T. 1025–1029
C.T. 1031–1032
C.T. 1032.99–1033.00
C.T. 1033.99–1034.00
C.T. 1035–1039
C.T. 1041–1042
C.T. 1042.99–1043.00
C.T. 1044–1046
C.T. 1047.01–1047.02
C.T. 1048–1049
C.T. 1051–1055
C.T. 1056.01–1056.02

MENTAL HEALTH: Ohio
Facility Listing

Facility Name

Cleveland Psych Inst 4
County—Cuyahoga
Grafton Corr Fac
County—Lorain
Lake Erie Corr Inst
County—Ashtabula
Massillon State Hosp
County—Stark
S Ohio Corr Fac
County—Scioto

MENTAL HEALTH: Oklahoma
County Listing

County Name

*Adair
Service Area: Catchment Area #21
*Alfalfa
Service Area: Service Area 10
*Atoka
Service Area: Catchment Area #6
*Beaver
Service Area: Service Area 10
*Beckham
Service Area: Catchment Area #9
*Blaine
Service Area: Catchment Area #9
*Bryan
Service Area: Catchment Area #7
*Carter
Service Area: Catchment Area #7
*Cherokee

MENTAL HEALTH: Oklahoma
County Listing

County Name

Service Area: Catchment Area #21
*Choctaw
Service Area: Catchment Area #6
*Cimarron
Service Area: Service Area 10
*Coal
Service Area: Catchment Area #6
*Craig
Facility: Eastern State Mental Hospital
*Creek
Service Area: Catchment Area #13
*Custer
Service Area: Catchment Area #9
*Dewey
Service Area: Catchment Area #9
*Ellis
Service Area: Service Area 10
*Garfield
Service Area: Catchment Area 12
*Garvin
Service Area: Catchment Area #7
*Grant
Service Area: Catchment Area 12
*Greer
Service Area: Catchment Area #9
*Harper
Service Area: Service Area 10
*Haskell
Service Area: Catchment Area #6
*Hughes
Service Area: Catchment Area #6
*Johnston
Service Area: Catchment Area #7
*Kay
Service Area: Catchment Area #11
*Kingfisher
Service Area: Catchment Area 12
*Kiowa
Service Area: Catchment Area #9
*Latimer
Service Area: Catchment Area #6
*Le Flore
Service Area: Catchment Area #6
*Logan
Service Area: Catchment Area 12
*Love
Service Area: Catchment Area #7
*Major
Service Area: Service Area 10
*Marshall
Service Area: Catchment Area #7
*McCurtain
Service Area: Catchment Area #6
*Murray
Service Area: Catchment Area #7
*Noble
Service Area: Catchment Area #11
*Okfuskee
Service Area: Catchment Area #13
*Okmulgee
Service Area: Catchment Area #13
*Osage
Service Area: Catchment Area #11
*Pawnee
Service Area: Catchment Area #11
*Payne
Service Area: Catchment Area #11
*Pittsburg
Service Area: Catchment Area #6
*Pontotoc
Service Area: Catchment Area #7
*Pushmataha

MENTAL HEALTH: Oklahoma
County Listing

County Name

Service Area: Catchment Area #6
*Roger Mills
Service Area: Catchment Area #9
*Seminole
Service Area: Catchment Area #7
*Sequoyah
Service Area: Catchment Area #21
*Texas
Service Area: Service Area 10
*Wagoner
Service Area: Catchment Area #21
*Washita
Service Area: Catchment Area #9
*Woods
Service Area: Service Area 10
*Woodward
Service Area: Service Area 10

MENTAL HEALTH: Oklahoma
Service Area Listing

Service Area Name

Catchment Area 12
County—Garfield
County—Grant
County—Kingfisher
County—Logan
Catchment Area #11
County—Kay
County—Noble
County—Osage
County—Pawnee
County—Payne
Catchment Area #13
County—Creek
County—Okfuskee
County—Okmulgee
Catchment Area #21
County—Adair
County—Cherokee
County—Sequoyah
County—Wagoner
Catchment Area #6
County—Atoka
County—Choctaw
County—Coal
County—Haskell
County—Hughes
County—Latimer
County—Le Flore
County—McCurtain
County—Pittsburg
County—Pushmataha
Catchment Area #7
County—Bryan
County—Carter
County—Garvin
County—Johnston
County—Love
County—Marshall
County—Murray
County—Pontotoc
County—Seminole
Catchment Area #9
County—Beckham
County—Blaine
County—Custer
County—Dewey
County—Greer
County—Kiowa
County—Roger Mills
County—Washita

MENTAL HEALTH: Oklahoma
Service Area Listing

Service Area Name

Service Area 10
County—Alfalfa
County—Beaver
County—Cimarron
County—Ellis
County—Harper
County—Major
County—Texas
County—Woods
County—Woodward

MENTAL HEALTH: Oklahoma
Facility Listing

Facility Name

Eastern State Mental Hospital
County—Craig

MENTAL HEALTH: Oregon
County Listing

County Name

*Baker
Service Area: Northeastern Oregon
*Clatsop
*Coos
Service Area: Catchment Area 14
*Crook
Service Area: Central Oregon
*Curry
Service Area: Catchment Area 14
*Douglas
*Gilliam
Service Area: East Columbia
*Grant
Service Area: East Columbia
*Harney
Service Area: Southeastern Oregon
*Hood River
Service Area: Mid Columbia Region
*Jefferson
Service Area: Central Oregon
*Josephine
*Klamath
*Klamath
Service Area: Southcentral Oregon
Service Area: Southcentral Oregon
*Lake
*Lake
Service Area: Southcentral Oregon
Service Area: Southcentral Oregon
*Lincoln
*Malheur
Service Area: Southeastern Oregon
*Marion
Population Group: Low Inc/MFW/Homeless—Marion And Polk C
*Morrow
Service Area: East Columbia
*Polk
Population Group: Low Inc/MFW/Homeless—Marion And Polk C
*Sherman
Service Area: Mid Columbia Region
*Tillamook
*Umatilla
Service Area: East Columbia
*Union
Service Area: Northeastern Oregon
*Wallowa
Service Area: Northeastern Oregon
*Wasco

MENTAL HEALTH: Oregon
County Listing

County Name

Service Area: Mid Columbia Region
*Wheeler
Service Area: East Columbia

MENTAL HEALTH: Oregon
Service Area Listing

Service Area Name

Catchment Area 14
County—Coos
County—Curry
Central Oregon
County—Crook
County—Jefferson
East Columbia
County—Gilliam
County—Grant
County—Morrow
County—Umatilla
County—Wheeler
Mid Columbia Region
County—Hood River
County—Sherman
County—Wasco
Northeastern Oregon
County—Baker
County—Union
County—Wallowa
Southcentral Oregon
County—Klamath
County—Lake
County—Lake
Southeastern Oregon
County—Harney
County—Malheur

MENTAL HEALTH: Oregon
Population Group Listing

Population Group

Low Inc/MFW/Homeless—Marion And Polk C
County—Marion
County—Polk

MENTAL HEALTH: Pennsylvania
County Listing

County Name

*Adams
Population Group: Low Inc—Gettysburg/Hanover
*Armstrong
*Beaver
Population Group: Low Income—Beaver Co
*Bradford
Carbon
*Clearfield
Population Group: Low Income—Clearfield Co
Facility: SCI Houtzdale
*Clinton
Cumberland
Facility: SCI Camp Hill
Fayette
*Forest
*Franklin
*Greene
*Huntingdon
Service Area: Huntingdon/Juniata/Mifflin
*Juniata
Service Area: Huntingdon/Juniata/Mifflin

MENTAL HEALTH: Pennsylvania
County Listing

County Name

Lackawanna
  Population Group: Low Income—Northern Lackawana
Lancaster
  Population Group: Low Inc—Welsh Mountain Ca
  Population Group: Low Inc—Lancaster City
Lycoming
  Facility: SCI Muncy
*Mifflin
  Service Area: Huntingdon/Juniata/Mifflin
Monroe
*Pike
*Potter
*Schuylkill
*Susquehanna
  Service Area: Susquehanna/Wayne
*Warren
*Wayne
  Service Area: Susquehanna/Wayne
  Facility: Forensic Treatment Ctr
Wyoming
York
  Population Group: Low Inc—Gettysburg/Hanover

MENTAL HEALTH: Pennsylvania
Service Area Listing

Service Area Name

Huntingdon/Juniata/Mifflin
  County—Huntingdon
  County—Juniata
  County—Mifflin
    Parts:
      Bart Township
    Parts:
      Brecknock Township
      Caernarvon Township
      Christiana Borough
      Colerain Township
      Earl Township
      East Earl Township
      Eden Township
      Leacock Township
      Little Britain Township
      New Holland Borough
      Paradise Township
      Quarryville Borough
      Sadsbury Township
      Salisbury Township
      Terre Hill Borough
      Archbald Borough
    Parts:
      Blakely Borough
      Carbondale City
      Carbondale Township
      Fell Township
      Greenfield Township
      Jefferson Township
      Jermyn Borough
      Jessup Borough
      Mayfield Borough
      Olyphant Borough
      Scott Township
      Vandling Borough
Punxsutawney
    Parts:
      Banks Township
      Canoe Township
      Glen Campbell Borough
      North Mahoning Township

MENTAL HEALTH: Pennsylvania
Service Area Listing

Service Area Name

    Smicksburg Borough
    West Mahoning Township
    Beaver Township
  Parts:
    Bell Township
    Big Run Borough
    Gaskill Township
    Henderson Township
    McCalmont Township
    Oliver Township
    Perry Township
    Porter Township
    Punxsutawney Borough
    Ringgold Township
    Timblin Borough
    Worthville Borough
    Young Township
Susquehanna/Wayne
  County—Susquehanna
  County—Wayne

MENTAL HEALTH: Pennsylvania
Population Group Listing

Population Group

Low Inc—Gettysburg/Hanover
  County—Adams
  County—York
    Parts:
      Hanover Borough
      Paradise Township
      Washington Township
Low Inc—Lancaster City
  County—Lancaster
    Parts:
      C.T. 1
      C.T. 4–10
      C.T. 14–16
Low Inc—Welsh Mountain Ca
  County—Lancaster
Low Income—Beaver Co
  County—Beaver
Low Income—Clearfield Co
  County—Clearfield
Low Income—Northern Lackawana
  County—Lackawanna

MENTAL HEALTH: Pennsylvania
Facility Listing

Facility Name

Forensic Treatment Ctr
  County—Wayne
SCI Camp Hill
  County—Cumberland
SCI Houtzdale
  County—Clearfield
SCI Muncy
  County—Lycoming

MENTAL HEALTH: Rhode Island
County Listing

County Name

Washington
  Population Group: Narragansett Indian Tribe
    Parts:

MENTAL HEALTH: Rhode Island
Service Area Listing

Service Area Name

Charlestown Town

MENTAL HEALTH: Rhode Island
Population Group Listing

Population Group

Narragansett Indian Tribe
  County—Washington

MENTAL HEALTH: South Carolina
County Listing

County Name

*Abbeville
  Service Area: Catchment Area 5
*Allendale
  Population Group: Low Inc—Catchment Area 11
*Anderson
  Population Group: Low Inc—Catchment Area 1
  Facility: Patrick B. Harris Psychiatric Hospital
*Bamberg
  Service Area: Catchment Area 14
*Barnwell
  Population Group: Low Inc—Catchment Area 10
*Beaufort
  Population Group: Low Inc—Catchment Area 11
*Berkeley
  Service Area: Catchment Area 8B
*Calhoun
  Service Area: Catchment Area 14
*Charleston
  Population Group: Low Inc—Catchment Area 15
*Cherokee
  Service Area: Catchment Area 3
*Chester
  Service Area: Catchment Area 4
*Chesterfield
  Service Area: Catchment Area 12
*Clarendon
  Service Area: Catchment Area 9
*Colleton
  Population Group: Low Inc—Catchment Area 11
*Darlington
  Service Area: Catchment Area 7
*Dillon
  Service Area: Catchment Area 12
*Dorchester
  Population Group: Low Inc—Catchment Area 15
*Edgefield
  Service Area: Catchment Area 5
*Fairfield
*Florence
  Service Area: Catchment Area 7
Greenville
  Population Group: Low Inc—Catchment Area 2
*Greenwood
  Service Area: Catchment Area 5
*Hampton
  Population Group: Low Inc—Catchment Area 11
*Jasper
  Population Group: Low Inc—Catchment Area 11

MENTAL HEALTH: South Carolina
County Listing

County Name

*Kershaw
Service Area: Catchment Area 9
*Lancaster
Service Area: Catchment Area 4
*Laurens
Service Area: Catchment Area 5
*Lee
Service Area: Catchment Area 9
*Marion
Service Area: Catchment Area 7
*Marlboro
Service Area: Catchment Area 12
*McCormick
Service Area: Catchment Area 5
*Newberry
Service Area: Catchment Area 5
*Oconee
Population Group: Low Inc—Catchment Area 1
*Orangeburg
Service Area: Catchment Area 14
*Pickens
Population Group: Low Inc—Catchment Area 1
Richland
Facility: G. Werber Bryan Psychiatric Hospital
Facility: William S. Hall Institute
*Saluda
Service Area: Catchment Area 5
*Spartanburg
Service Area: Catchment Area 3
*Sumter
Service Area: Catchment Area 9
*Union
Service Area: Catchment Area 3
*Williamsburg
Service Area: Catchment Area 13
*York
Service Area: Catchment Area 4

MENTAL HEALTH: South Carolina
Service Area Listing

Service Area Name

Catchment Area 12
County—Chesterfield
County—Dillon
County—Marlboro
Catchment Area 13
County—Williamsburg
Catchment Area 14
County—Bamberg
County—Calhoun
County—Orangeburg
Catchment Area 3
County—Cherokee
County—Spartanburg
County—Union
Catchment Area 4
County—Chester
County—Lancaster
County—York
Catchment Area 5
County—Abbeville
County—Edgefield
County—Greenwood
County—Laurens
County—McCormick
County—Newberry
County—Saluda
Catchment Area 7

MENTAL HEALTH: South Carolina
Service Area Listing

Service Area Name

County—Darlington
County—Florence
County—Marion
Catchment Area 8B
County—Berkeley
Catchment Area 9
County—Clarendon
County—Kershaw
County—Lee
County—Sumter

MENTAL HEALTH: South Carolina
Population Group Listing

Population Group

Low Inc—Catchment Area 10
Parts:
Aiken Co
County—Barnwell
Parts:
Low Income
Low Inc—Catchment Area 15
County—Charleston
County—Dorchester
Low Inc—Catchment Area 2
County—Greenville
Parts:
C.T. 1–10
C.T. 11.01–11.02
C.T. 12.01–12.02
C.T. 13.01–13.02
C.T. 14
C.T. 15.01–15.02
C.T. 16–17
C.T. 18.02–18.06
C.T. 19
C.T. 21.03–21.08
C.T. 22.01–22.02
C.T. 23.01–23.04
C.T. 27
C.T. 37.01–37.02
C.T. 37.04–37.05
C.T. 38.01–38.02
C.T. 39.02–39.04
C.T. 40–41
Low Inc—Catchment Area 11
County—Allendale
Parts:
Allendale Co
County—Beaufort
Parts:
Low Income
County—Colleton
Parts:
Low Income
County—Hampton
Parts:
Low Income
County—Jasper
Parts:
Low Income
Low Inc—Catchment Area 1
County—Anderson
County—Oconee
County—Pickens

MENTAL HEALTH: South Carolina
Facility Listing

Facility Name

G. Werber Bryan Psychiatric Hospital
County—Richland

MENTAL HEALTH: South Carolina
Facility Listing

Facility Name

Patrick B. Harris Psychiatric Hospital
County—Anderson
William S. Hall Institute
County—Richland

MENTAL HEALTH: South Dakota
County Listing

County Name

*Aurora
Service Area: Catchment Area 4
*Beadle
Service Area: Catchment Area 3
*Bon Homme
Service Area: Catchment Area 12
Facility: Sd State Pen.—Bon Homme
*Brookings
Service Area: Catchment Area 1
*Brown
*Brule
Service Area: Catchment Area 4
*Buffalo
Service Area: Catchment Area 2
*Campbell
*Charles Mix
Service Area: Catchment Area 12
*Clark
Service Area: Catchment Area 5
*Clay
Service Area: Catchment Area 12
*Codington
Service Area: Catchment Area 5
*Corson
Service Area: Catchment Area 8
*Davison
Service Area: Catchment Area 4
*Day
*Deuel
Service Area: Catchment Area 5
*Dewey
Service Area: Catchment Area 8
*Douglas
Service Area: Catchment Area 12
*Edmunds
*Faulk
*Grant
Service Area: Catchment Area 5
*Gregory
Service Area: Catchment Area 10
*Haakon
Service Area: Catchment Area 2
*Hamlin
Service Area: Catchment Area 5
*Hand
Service Area: Catchment Area 3
*Hanson
Service Area: Catchment Area 4
*Hughes
Service Area: Catchment Area 2
*Hutchinson
Service Area: Catchment Area 12
*Hyde
Service Area: Catchment Area 2
*Jerauld
Service Area: Catchment Area 3
*Jones
Service Area: Catchment Area 2
*Kingsbury
Service Area: Catchment Area 5
*Lake
Service Area: Catchment Area 3
*Lyman

MENTAL HEALTH: South Dakota
County Listing

County Name

Service Area: Catchment Area 2
*Marshall
*Mellette
Service Area: Catchment Area 10
*Miner
Service Area: Catchment Area 3
Minnehaha
Facility: Sd State Pen.—Minnehaha
*Moody
Service Area: Catchment Area 1
*MCPherson
*Perkins
Service Area: Catchment Area 8
*Potter
*Roberts
Service Area: Catchment Area 5
*Sanborn
Service Area: Catchment Area 4
*Spink (g)
Facility: Redfield State Hospital
*Stanley
Service Area: Catchment Area 2
*Sully
Service Area: Catchment Area 2
*Todd
Service Area: Catchment Area 10
*Tripp
Service Area: Catchment Area 10
*Union
Service Area: Catchment Area 12
*Walworth
*Yankton
Service Area: Catchment Area 12
Facility: South Dakota Human Srv Ctr
*Ziebach
Service Area: Catchment Area 8

MENTAL HEALTH: South Dakota
Service Area Listing

Service Area Name

Catchment Area 1
County—Brookings
County—Moody
Catchment Area 10
County—Gregory
County—Mellette
County—Todd
County—Tripp
Catchment Area 12
County—Bon Homme
County—Charles Mix
County—Clay
County—Douglas
County—Hutchinson
County—Union
County—Yankton
Catchment Area 2
County—Buffalo
County—Haakon
County—Hughes
County—Hyde
County—Jones
County—Lyman
County—Stanley
County—Sully
Catchment Area 3
County—Beadle
County—Hand
County—Jerauld
County—Lake
County—Miner

MENTAL HEALTH: South Dakota
Service Area Listing

Service Area Name

Catchment Area 4
County—Aurora
County—Brule
County—Davison
County—Hanson
County—Sanborn
Catchment Area 5
County—Clark
County—Codington
County—Deuel
County—Grant
County—Hamlin
County—Kingsbury
County—Roberts
Catchment Area 7
Catchment Area 8
County—Corson
County—Dewey
County—Perkins
County—Ziebach

MENTAL HEALTH: South Dakota
Facility Listing

Facility Name

Redfield State Hospital
County—Spink
Sd State Pen.—Bon Homme
County—Bon Homme
Sd State Pen.—Minnehaha
County—Minnehaha
South Dakota Human Srv Ctr
County—Yankton

MENTAL HEALTH: Tennessee
County Listing

County Name

*Bedford
Population Group: Low Inc—Catchment Area 19
*Benton
Population Group: Low Inc—Catchment Area 21
*Bledsoe
Population Group: Low Inc—Catchment Area 12
*Bradley
Population Group: Low Inc—Catchment Area 10
*Cannon
Service Area: Catchment Area 9
*Carroll
Population Group: Low Inc—Catchment Area 21
*Cheatham
Population Group: Low Inc—Catchment Area 14
*Chester
Service Area: Catchment Area 24
*Claiborne
Population Group: Low Inc—Catchment Area 5
*Clay
Service Area: Catchment Area 9
*Cocke
Population Group: Low Inc—Catchment Area 5
*Coffee
Population Group: Low Inc—Catchment Area 19
*Crockett

MENTAL HEALTH: Tennessee
County Listing

County Name

Service Area: Catchment Area 22
*Cumberland
Service Area: Catchment Area 9
*Decatur
Service Area: Catchment Area 24
*Dekalb
Service Area: Catchment Area 9
*Dickson
Population Group: Low Inc—Catchment Area 14
*Dyer
Service Area: Catchment Area 22
*Fayette
Service Area: Catchment Area 25
*Fentress
Service Area: Catchment Area 9
*Franklin
Population Group: Low Inc—Catchment Area 19
*Gibson
Population Group: Low Inc—Catchment Area 21
*Giles
Service Area: Catchment Area 20
*Grainger
Population Group: Low Inc—Catchment Area 5
*Greene
Population Group: Low Inc—Catchment Area 4
*Grundy
Population Group: Low Inc—Catchment Area 12
*Hamblen
Population Group: Low Inc—Catchment Area 5
*Hancock
Population Group: Low Inc—Catchment Area 4
*Hardeman
Service Area: Catchment Area 24
*Hardin
Service Area: Catchment Area 24
*Hawkins
Population Group: Low Inc—Catchment Area 4
*Haywood
Service Area: Catchment Area 23
*Henderson
Service Area: Catchment Area 23
*Henry
Population Group: Low Inc—Catchment Area 21
*Hickman
Service Area: Catchment Area 20
*Houston
Population Group: Low Inc—Catchment Area 14
*Humphreys
Population Group: Low Inc—Catchment Area 14
*Jackson
Service Area: Catchment Area 9
*Jefferson
Population Group: Low Inc—Catchment Area 5
*Lake
Service Area: Catchment Area 22
*Lauderdale
Service Area: Catchment Area 25
*Lawrence
Service Area: Catchment Area 20

MENTAL HEALTH: Tennessee
County Listing

County Name

*Lewis
Service Area: Catchment Area 20
*Lincoln
Population Group: Low Inc—Catchment Area 19
*Macon
Service Area: Catchment Area 9
*Madison
Service Area: Catchment Area 23
*Marion
Population Group: Low Inc—Catchment Area 12
*Marshall
Service Area: Catchment Area 20
*Maury
Service Area: Catchment Area 20
*McMinn
Population Group: Low Inc—Catchment Area 10
*McNairy
Service Area: Catchment Area 24
*Meigs
Population Group: Low Inc—Catchment Area 10
*Montgomery
Population Group: Low Inc—Catchment Area 14
*Moore
Population Group: Low Inc—Catchment Area 19
*Obion
Service Area: Catchment Area 22
*Overton
Service Area: Catchment Area 9
*Perry
Service Area: Catchment Area 20
*Pickett
Service Area: Catchment Area 9
*Polk
Population Group: Low Inc—Catchment Area 10
*Putnam
Service Area: Catchment Area 9
*Rhea
Population Group: Low Inc—Catchment Area 12
*Robertson
Population Group: Low Inc—Catchment Area 14
*Sequatchie
Population Group: Low Inc—Catchment Area 12
*Shelby
Population Group: Low Inc—Shelby
*Smith
Service Area: Catchment Area 9
*Stewart
Population Group: Low Inc—Catchment Area 14
*Sumner
Service Area: Catchment Area 31
*Tipton
Service Area: Catchment Area 25
*Trousdale
Service Area: Catchment Area 31
*Union
Population Group: Low Inc—Catchment Area 5
*Van Buren
Service Area: Catchment Area 9
*Warren
Service Area: Catchment Area 9

MENTAL HEALTH: Tennessee
County Listing

County Name

*Wayne
Service Area: Catchment Area 20
*Weakley
Service Area: Catchment Area 22
*White
Service Area: Catchment Area 9
*Wilson
Service Area: Catchment Area 31

MENTAL HEALTH: Tennessee
Service Area Listing

Service Area Name

Catchment Area 20
County—Giles
County—Hickman
County—Lawrence
County—Lewis
County—Marshall
County—Maury
County—Perry
County—Wayne
Catchment Area 22
County—Crockett
County—Dyer
County—Lake
County—Obion
County—Weakley
Catchment Area 23
County—Haywood
County—Henderson
County—Madison
Catchment Area 24
County—Chester
County—Decatur
County—Hardeman
County—Hardin
County—McNairy
Catchment Area 25
County—Fayette
County—Lauderdale
County—Tipton
Catchment Area 31
County—Sumner
County—Trousdale
County—Wilson
Catchment Area 9
County—Cannon
County—Clay
County—Cumberland
County—Dekalb
County—Fentress
County—Jackson
County—Macon
County—Overton
County—Pickett
County—Putnam
County—Smith
County—Van Buren
County—Warren
County—White

MENTAL HEALTH: Tennessee
Population Group Listing

Population Group

Low Inc—Catchment Area 4
County—Greene
County—Hancock
County—Hawkins
Low Inc—Catchment Area 21
County—Benton

MENTAL HEALTH: Tennessee
Population Group Listing

Population Group

County—Carroll
County—Gibson
County—Henry
Low Inc—Catchment Area 19
County—Bedford
County—Coffee
County—Franklin
County—Lincoln
County—Moore
Low Inc—Catchment Area 10
County—Bradley
County—McMinn
County—Meigs
County—Polk
Low Inc—Catchment Area 12
County—Bledsoe
County—Grundy
County—Marion
County—Rhea
County—Sequatchie
Low Inc—Catchment Area 14
County—Cheatham
County—Dickson
County—Houston
County—Humphreys
County—Montgomery
County—Robertson
County—Stewart
Low Inc—Catchment Area 5
County—Claiborne
County—Cocke
County—Grainger
County—Hamblen
County—Jefferson
County—Union
Low Inc—Shelby
County—Shelby

MENTAL HEALTH: Texas
County Listing

County Name

*Anderson
Facility: Beto Psn
Facility: Gurney Prison
*Andrews
Service Area: West Texas Center (LSA 46a)
*Angelina
Service Area: LSA 7 (Burke Center)
Facility: Duncan Prison
*Archer
Service Area: Rolling Plains (LSA 39b)
*Armstrong
Service Area: Texas Panhandle (LSA 45b)
*Atascosa
Service Area: LSA 8 (Camino Real)
*Austin
Service Area: LSA 11 (Central Gulf Designation)
*Bailey
Service Area: LSA 12 (Central Plains)
*Bandera
Service Area: LSA 40
*Bee
Facility: McConnel Prsn
*Bowie
Service Area: LSA 34 (North East Texas)
Brazoria
*Brazos
Service Area: LSA 32 (MHMra Of Brazos Valley)

MENTAL HEALTH: Texas
County Listing

County Name

*Brewster
Service Area: LSA 6 (Big Bend)
*Briscoe
Service Area: LSA 12 (Central Plains)
*Brooks
Service Area: Coastal Plain—LSA 14b
*Brown
Service Area: LSA 13 (Central Texas)
*Burleson
Service Area: LSA 32 (MHMra Of Brazos Valley)
*Callahan
Service Area: Abilene—LSA 1
*Cameron
Service Area: LSA 44 (Tropical Texas)
*Carson
Service Area: Texas Panhandle (LSA 45b)
*Cass
Service Area: LSA 34 (North East Texas)
*Castro
Service Area: LSA 12 (Central Plains)
*Childress
Service Area: LSA 53
*Clay
Service Area: Rolling Plains (LSA 39b)
*Cochran
Service Area: Cochran Service Area
*Coleman
Service Area: LSA 13 (Central Texas)
*Collingsworth
Service Area: Texas Panhandle (LSA 45b)
*Comanche
Service Area: LSA 13 (Central Texas)
*Cooke
Service Area: LSA 31 (Services Of Texoma)
Coryell
Facility: Mountain View Prison
*Crane
Service Area: Permian Basin (LSA 37)
*Crockett
Service Area: New Val Verde
*Crosby
Service Area: Crosby (LSA 29a)
*Culberson
Service Area: LSA 6 (Big Bend)
*Dawson
Service Area: West Texas Center (LSA 46a)
*Dickens
Service Area: Crosby (LSA 29a)
*Dimmit
Service Area: LSA 8 (Camino Real)
*Donley
Service Area: Texas Panhandle (LSA 45b)
*Duval
Service Area: Coastal Plain—LSA 14b
*Eastland
Service Area: LSA 13 (Central Texas)
*Ector
Service Area: Permian Basin (LSA 37)
*Edwards
Service Area: LSA 40
El Paso County
Service Area: Canutillo Service Area
Service Area: El Paso Service Area
Service Area: Fabens Service Area
Service Area: Hueco Mountain Service Area
*Ellis
Service Area: LSA 26 (Johnson County)
*Erath
Service Area: LSA 36 (Pecan Valley)
*Falls
Service Area: LSA 21 (Heart Of Texas MHMr-Mha)
*Fannin
Service Area: LSA 31 (Services Of Texoma)
*Fisher
Service Area: Abilene—LSA 1
*Floyd
Service Area: LSA 12 (Central Plains)
*Freestone
Service Area: LSA 21 (Heart Of Texas MHMr-Mha)
Facility: Boyd Prison
*Frio
Service Area: LSA 8 (Camino Real)
*Gaines
Service Area: West Texas Center (LSA 46a)
*Garza
Service Area: Crosby (LSA 29a)
Gillespie
Service Area: LSA 40
*Glasscock
Service Area: Permian Basin (LSA 37)
*Gonzales
Service Area: LSA 8 (Camino Real)
*Gray
Service Area: Texas Panhandle (LSA 45b)
*Grayson
Service Area: LSA 31 (Services Of Texoma)
*Gregg
Service Area: LSA 40 (Sabine Valley Center)
*Grimes
Service Area: LSA 32 (MHMra Of Brazos Valley)
*Guadalupe
Service Area: LSA 8 (Camino Real)
*Hale
Service Area: LSA 12 (Central Plains)
*Hall
Service Area: Texas Panhandle (LSA 45b)
*Hansford
Service Area: Texas Panhandle (LSA 45b)
*Hardin
Service Area: LSA 7 (Burke Center)
*Harrison
Service Area: LSA 40 (Sabine Valley Center)
*Haskell
Service Area: Abilene—LSA 1
*Hemphill
Service Area: Texas Panhandle (LSA 45b)
*Henderson
Service Area: Andrews Center (LSA 3)
*Hidalgo
Service Area: LSA 44 (Tropical Texas)
Facility: Lopez Psn
*Hill
*Hockley
Service Area: Cochran Service Area
*Hood
Service Area: LSA 36 (Pecan Valley)
*Houston
Service Area: LSA 7 (Burke Center)
*Hudspeth
Service Area: LSA 6 (Big Bend)
*Hutchinson
Service Area: Texas Panhandle (LSA 45b)
*Jack
Service Area: Rolling Plains (LSA 39b)
*Jasper
Service Area: LSA 7 (Burke Center)
*Jeff Davis
Service Area: LSA 6 (Big Bend)
*Jim Hogg
Service Area: LSA 27 (Laredo)
*Jim Wells
Service Area: Coastal Plain—LSA 14b
*Johnson
Service Area: LSA 26 (Johnson County)
*Jones
Service Area: Abilene—LSA 1
*Karnes
Service Area: LSA 8 (Camino Real)
Facility: Conanally Prison
*Kaufman
Facility: Terrell State Hospital
*Kendall
Service Area: LSA 40
*Kenedy
Service Area: Coastal Plain—LSA 14b
*Kent
Service Area: Crosby (LSA 29a)
*Kerr
Service Area: LSA 40
*Kimble
Service Area: LSA 40
*Kinney
Service Area: New Val Verde
*Kleberg
Service Area: Coastal Plain—LSA 14b
*La Salle
Service Area: LSA 8 (Camino Real)
*Lamb
Service Area: LSA 12 (Central Plains)
*Leon
Service Area: LSA 32 (MHMra Of Brazos Valley)
*Liberty
Service Area: LSA 43 (Tri-Co MHMr Center)
*Limestone
Service Area: LSA 21 (Heart Of Texas MHMr=Mha)
*Lipscomb
Service Area: Texas Panhandle (LSA 45b)
*Llano
Service Area: LSA 40
*Loving
Service Area: Permian Basin (LSA 37)
*Lynn
*Madison
Service Area: LSA 32 (MHMra Of Brazos Valley)
*Marion
Service Area: LSA 40 (Sabine Valley Center)
*Martin
Service Area: West Texas Center (LSA 46a)
*Mason
Service Area: LSA 40
*Maverick
Service Area: LSA 8 (Camino Real)
*McCulloch
Service Area: LSA 13 (Central Texas)
*McMullen
Service Area: LSA 8 (Camino Real)
*Medina
Service Area: Uvalde/Medina

MENTAL HEALTH: Texas
County Listing

County Name

*Menard
Service Area: LSA 40
*Midland
Service Area: Permian Basin (LSA 37)
*Mills
Service Area: LSA 13 (Central Texas)
*Montague
Service Area: Rolling Plains (LSA 39b)
*Montgomery
Service Area: LSA 43 (Tri-Co MHMr Center)
*Motley
Service Area: LSA 12 (Central Plains)
*Nacogdoches
Service Area: LSA 7 (Burke Center)
*Navarro
Service Area: LSA 26 (Johnson County)
*Newton
Service Area: LSA 7 (Burke Center)
*Nolan
Service Area: Abilene—LSA 1
*Ochiltree
Service Area: Texas Panhandle (LSA 45b)
*Palo Pinto
Service Area: LSA 36 (Pecan Valley)
*Panola
Service Area: LSA 40 (Sabine Valley Center)
*Parker
Service Area: LSA 36 (Pecan Valley)
*Parmer
Service Area: LSA 12 (Central Plains)
*Pecos
Service Area: Permian Basin (LSA 37)
*Polk
Service Area: LSA 7 (Burke Center)
Facility: Terrell Prison
*Presidio
Service Area: LSA 6 (Big Bend)
*Rains
Service Area: Andrews Center (LSA 3)
*Real
Service Area: LSA 40
*Red River
Service Area: LSA 34 (North East Texas)
*Roberts
Service Area: Texas Panhandle (LSA 45b)
*Robertson
Service Area: LSA 32 (MHMra Of Brazos Valley)
*Runnels
Service Area: LSA 37b
*Rusk
Service Area: LSA 40 (Sabine Valley Center)
*Sabine
Service Area: LSA 7 (Burke Center)
*San Augustine
Service Area: LSA 7 (Burke Center)
*San Jacinto
Service Area: LSA 7 (Burke Center)
*San Saba
Service Area: LSA 13 (Central Texas)
*Schleicher
*Shackelford
Service Area: Abilene—LSA 1
*Shelby
Service Area: LSA 7 (Burke Center)
*Smith
Service Area: Andrews Center (LSA 3)
*Somervell
Service Area: LSA 36 (Pecan Valley)

MENTAL HEALTH: Texas
County Listing

County Name

*Starr
Service Area: LSA 27 (Laredo)
*Stephens
Service Area: Abilene—LSA 1
*Stonewall
Service Area: Abilene—LSA 1
*Sutton
Service Area: New Val Verde
*Swisher
Service Area: LSA 12 (Central Plains)
Taylor
Service Area: Abilene—LSA 1
*Terrell
Service Area: New Val Verde
*Terry
Service Area: West Texas Center (LSA 46a)
*Throckmorton
Service Area: Abilene—LSA 1
*Trinity
Service Area: LSA 7 (Burke Center)
*Tyler
Service Area: LSA 7 (Burke Center)
*Upshur
Service Area: LSA 40 (Sabine Valley Center)
*Upton
Service Area: Permian Basin (LSA 37)
*Uvalde
Service Area: Uvalde/Medina
*Val Verde
Service Area: New Val Verde
*Van Zandt
Service Area: Andrews Center (LSA 3)
*Walker
Service Area: LSA 43 (Tri-Co MHMr Center)
*Waller
Service Area: LSA 11 (Central Gulf Designation)
*Ward
Service Area: Permian Basin (LSA 37)
*Washington
Service Area: LSA 32 (MHMra Of Brazos Valley)
*Webb
Service Area: LSA 27 (Laredo)
*Wheeler
Service Area: Texas Panhandle (LSA 45b)
*Willacy
Service Area: LSA 44 (Tropical Texas)
*Wilson
Service Area: LSA 8 (Camino Real)
*Winkler
Service Area: Permian Basin (LSA 37)
*Wise
Service Area: Rolling Plains (LSA 39b)
*Wood
Service Area: Andrews Center (LSA 3)
*Yoakum
Service Area: West Texas Center (LSA 46a)
*Young
Service Area: Rolling Plains (LSA 39b)
*Zapata
Service Area: LSA 27 (Laredo)
*Zavala
Service Area: LSA 8 (Camino Real)

MENTAL HEALTH: Texas
Service Area Listing

Service Area Name

Abilene—LSA 1
County—Callahan
County—Fisher
County—Haskell
County—Jones
County—Nolan
County—Shackelford
County—Stephens
County—Stonewall
County—Taylor
County—Throckmorton
Andrews Center (LSA 3)
County—Henderson
County—Rains
County—Smith
County—Van Zandt
County—Wood
Canutillo Service Area
County—El Paso County
Parts:
El Paso Northwest Division
Coastal Plain—LSA 14b
County—Brooks
County—Duval
County—Jim Wells
County—Kenedy
County—Kleberg
Cochran Service Area
County—Cochran
County—Hockley
Crosby (LSA 29a)
County—Crosby
County—Dickens
County—Garza
County—Kent
El Paso Service Area
County—El Paso County
Parts:
El Paso Division
Fabens Service Area
County—El Paso County
Parts:
El Paso East Division
Hueco Mountain Service Area
County—El Paso County
Parts:
El Paso North Central Division
LSA 11 (Central Gulf Designation)
County—Austin
County—Waller
LSA 12 (Central Plains)
County—Bailey
County—Briscoe
County—Castro
County—Floyd
County—Hale
County—Lamb
County—Motley
County—Parmer
County—Swisher
LSA 13 (Central Texas)
County—Brown
County—Coleman
County—Comanche
County—Eastland
County—McCulloch
County—Mills
County—San Saba
LSA 21 (Heart Of Texas MHMr=Mha)
County—Falls
County—Freestone
County—Limestone

MENTAL HEALTH: Texas
Service Area Listing

Service Area Name

LSA 26 (Johnson County)
County—Ellis
County—Johnson
County—Navarro
LSA 27 (Laredo)
County—Jim Hogg
County—Starr
County—Webb
County—Zapata
LSA 31 (Services Of Texoma)
County—Cooke
County—Fannin
County—Grayson
LSA 32 (MHMra Of Brazos Valley)
County—Brazos
County—Burleson
County—Grimes
County—Leon
County—Madison
County—Robertson
County—Washington
LSA 34 (North East Texas)
County—Bowie
County—Cass
County—Red River
LSA 36 (Pecan Valley)
County—Erath
County—Hood
County—Palo Pinto
County—Parker
County—Somervell
LSA 37b
County—Runnels
LSA 40
County—Bandera
County—Edwards
County—Gillespie
County—Kendall
County—Kerr
County—Kimble
County—Llano
County—Mason
County—Menard
County—Real
LSA 40 (Sabine Valley Center)
County—Gregg
County—Harrison
County—Marion
County—Panola
County—Rusk
County—Upshur
LSA 43 (Tri-Co MHMr Center)
County—Liberty
County—Montgomery
County—Walker
LSA 44 (Tropical Texas)
County—Cameron
County—Hidalgo
County—Willacy
LSA 53
County—Childress
LSA 6 (Big Bend)
County—Brewster
County—Culberson
County—Hudspeth
County—Jeff Davis
County—Presidio
LSA 7 (Burke Center)
County—Angelina
County—Hardin
County—Houston
County—Jasper

MENTAL HEALTH: Texas
Service Area Listing

Service Area Name

County—Nacogdoches
County—Newton
County—Polk
County—Sabine
County—San Augustine
County—San Jacinto
County—Shelby
County—Trinity
County—Tyler
LSA 8 (Camino Real)
County—Atascosa
County—Dimmit
County—Frio
County—Gonzales
County—Guadalupe
County—Karnes
County—La Salle
County—McMullen
County—Maverick
County—Wilson
County—Zavala
New Val Verde
County—Crockett
County—Kinney
County—Sutton
County—Terrell
County—Val Verde
Permian Basin (LSA 37)
County—Crane
County—Ector
County—Glasscock
County—Loving
County—Midland
County—Pecos
County—Upton
County—Ward
County—Winkler
Rolling Plains (LSA 39b)
County—Archer
County—Clay
County—Jack
County—Montague
County—Wise
County—Young
Texas Panhandle (LSA 45b)
County—Armstrong
County—Carson
County—Collingsworth
County—Donley
County—Gray
County—Hall
County—Hansford
County—Hemphill
County—Hutchinson
County—Lipscomb
County—Ochiltree
County—Roberts
County—Wheeler
Uvalde/Medina
County—Medina
County—Uvalde
West Texas Center (LSA 46a)
County—Andrews
County—Dawson
County—Gaines
County—Martin
County—Terry
County—Yoakum

MENTAL HEALTH: Texas
Facility Listing

Facility Name

Beto Psn
County—Anderson
Boyd Prison
County—Freestone
Conanally Prison
County—Karnes
Duncan Prison
County—Angelina
Gurney Prison
County—Anderson
Lopez Psn
County—Hidalgo
McConnel Prsn
County—Bee
Mountain View Prison
County—Coryell
Terrell Prison
County—Polk
Terrell State Hospital
County—Kaufman

MENTAL HEALTH: Utah
County Listing

County Name

*Beaver
Service Area: Five County MHCA (SW District)
*Box Elder
Population Group: Low Inc—Bridgerland Area
*Cache
Population Group: Low Inc—Bridgerland Area
*Carbon
Population Group: Low Inc—Four County MHCA (SE District)
*Daggett
Service Area: Uintah Basin
*Duchesne
Service Area: Uintah Basin
*Emery
Population Group: Low Inc—Four County MHCA (SE District)
*Garfield
Service Area: Five County MHCA (SW District)
*Grand
Population Group: Low Inc—Four County MHCA (SE District)
*Iron
Service Area: Five County MHCA (SW District)
*Juab
Service Area: Six County MHCA
Kane
Service Area: Five County MHCA (SW District)
*Millard
Service Area: Six County MHCA
*Morgan
Population Group: Low Inc—Weber/Morgan
*Piute
Service Area: Six County MHCA
*Rich
Population Group: Low Inc—Bridgerland Area
Salt Lake
Facility: Draper State Prison
*San Juan
Population Group: Low Inc—Four County MHCA (SE District)

MENTAL HEALTH: Utah
County Listing

County Name

*Sanpete
Service Area: Six County MHCA
Facility: Central Utah Corr Fac
*Sevier
Service Area: Six County MHCA
*Summit
*Tooele
*Uintah
Service Area: Uintah Basin
Utah
*Wasatch
*Washington
Service Area: Five County MHCA (SW District)
*Wayne
Service Area: Six County MHCA
Weber
Population Group: Low Inc—Weber/Morgan

MENTAL HEALTH: Utah
Service Area Listing

Service Area Name

Five County MHCA (SW District)
County—Beaver
County—Garfield
County—Iron
County—Kane
County—Washington
Six County MHCA
County—Juab
County—Millard
County—Piute
County—Sanpete
County—Sevier
County—Wayne
Uintah Basin
County—Daggett
County—Duchesne
County—Uintah

MENTAL HEALTH: Utah
Population Group Listing

Population Group

Low Inc—Bridgerland Area
County—Box Elder
County—Cache
County—Rich
Low Inc—Four County MHCA (SE District)
County—Carbon
County—Emery
County—Grand
County—San Juan
Low Inc—Weber/Morgan
County—Morgan
County—Weber

MENTAL HEALTH: Utah
Facility Listing

Facility Name

Central Utah Corr Fac
County—Sanpete
Draper State Prison
County—Salt Lake

MENTAL HEALTH: Vermont
County Listing

County Name

*Caledonia
Service Area: Northeast Kingdom
*Essex
Service Area: Northeast Kingdom
*Franklin
Service Area: Franklin/Grand Isle
*Grand Isle
Service Area: Franklin/Grand Isle
*Orleans
Service Area: Northeast Kingdom

MENTAL HEALTH: Vermont
Service Area Listing

Service Area Name

Franklin/Grand Isle
County—Franklin
County—Grand Isle
Northeast Kingdom
County—Caledonia
County—Essex
County—Orleans

MENTAL HEALTH: Virginia
County Listing

County Name

*Accomack
Service Area: Eastern Shore Of Virginia
*Amelia
Service Area: Planning Dist XIV
*Bland
Service Area: Mount Rogers
*Brunswick
Service Area: Southside Planning Ditrict
*Buchanan
Service Area: Planning Dist II
*Buckingham
Service Area: Planning Dist XIV
*Carroll
Service Area: Mount Rogers
*Charlotte
Service Area: Planning Dist XIV
Chesapeake
Population Group: Low Inc—S. Norfolk (Pl. District 20)
*Cumberland
Service Area: Planning Dist XIV
*Danville City
Service Area: Planning Dist XII
*Dickenson
Service Area: Planning Dist II
*Dinwiddie/Petersburg
Service Area: Planning Dist Xix
*Essex
Service Area: Middle Peninsula/Northern Neck
*Floyd
Service Area: New River Valley—Planning District Iv
*Franklin
Service Area: Planning Dist XII
*Galax City
Service Area: Mount Rogers
*Giles
Service Area: New River Valley—Planning District Iv
*Gloucester
Service Area: Middle Peninsula/Northern Neck
*Grayson
Service Area: Mount Rogers
*Halifax
Service Area: Southside Planning Ditrict
*Henry
Service Area: Planning Dist XII
*King And Queen
Service Area: Middle Peninsula/Northern Neck
*King William
Service Area: Middle Peninsula/Northern Neck
*Lancaster
Service Area: Middle Peninsula/Northern Neck
*Lee
Service Area: Lenowisco
*Lunenburg
Service Area: Planning Dist XIV
*Martinsville City
Service Area: Planning Dist XII
*Mathews
Service Area: Middle Peninsula/Northern Neck
*Mecklenburg
Service Area: Southside Planning Ditrict
*Middlesex
Service Area: Middle Peninsula/Northern Neck
*Northampton
Service Area: Eastern Shore Of Virginia
*Northumberland
Service Area: Middle Peninsula/Northern Neck
*Norton City
Service Area: Lenowisco
*Nottoway
Service Area: Planning Dist XIV
*Patrick
Service Area: Planning Dist XII
*Pittsylvania
Service Area: Planning Dist XII
*Prince Edward
Service Area: Planning Dist XIV
*Pulaski
Service Area: New River Valley—Planning District Iv
*Richmond
Service Area: Middle Peninsula/Northern Neck
*Russell
Service Area: Planning Dist II
*Scott
Service Area: Lenowisco
*Smyth
Service Area: Mount Rogers
Facility: Southwestern MH Inst
*Surry
Service Area: Planning Dist Xix
*Sussex
Service Area: Planning Dist Xix
*Tazewell
Service Area: Planning Dist II
*Westmoreland
Service Area: Middle Peninsula/Northern Neck
*Wise
Service Area: Lenowisco
*Wythe
Service Area: Mount Rogers

MENTAL HEALTH: Virginia
Service Area Listing

Service Area Name
Eastern Shore Of Virginia
County—Accomack
County—Northampton
Lenowisco
County—Lee
County—Scott
County—Wise
County—Norton City
Middle Peninsula/Northern Neck
County—Essex
County—Gloucester
County—King And Queen
County—King William
County—Lancaster
County—Mathews
County—Middlesex
County—Northumberland
County—Richmond
County—Westmoreland
Mount Rogers
County—Bland
County—Carroll
County—Grayson
County—Smyth
County—Wythe
County—Galax City
New River Valley—Planning District Iv
County—Floyd
County—Giles
County—Pulaski
Planning Dist II
County—Buchanan
County—Dickenson
County—Russell
County—Tazewell
Planning Dist Xix
County—Dinwiddie/Petersburg
County—Surry
County—Sussex
Planning Dist XII
County—Franklin
County—Henry
County—Patrick
County—Pittsylvania
County—Danville City
County—Martinsville City
Planning Dist XIV
County—Amelia
County—Buckingham
County—Charlotte
County—Cumberland
County—Lunenburg
County—Nottoway
County—Prince Edward
Southside Planning Ditrict
County—Brunswick
County—Halifax
County—Mecklenburg

MENTAL HEALTH: Virginia
Population Group Listing

Population Group
Low Inc—S. Norfolk (Pl. District 20)
County—Chesapeake
Parts:
C.T. 201–204
C.T. 205.01–205.02
C.T. 206–207
C.T. 209.03

MENTAL HEALTH: Virginia
Facility Listing

Facility Name
Southwestern MH Inst
County—Smyth

MENTAL HEALTH: Washington
County Listing

County Name
*Adams
*Benton
Service Area: Tri-Cities
*Chelan
Service Area: Chelan/Douglas
*Clallam (g)
Facility: Clallam Bay Corr Ctr
*Cowlitz
Population Group: Low Inc—Cowlitz Co
*Douglas
Service Area: Chelan/Douglas
*Ferry
*Franklin
Service Area: Tri-Cities
Facility: Coyote Ridge Corr Ctr
*Grant
*Jefferson
*Kittitas
*Lewis
Population Group: Low Inc—Lewis Co
*Lincoln
*Mason
Population Group: Low Inc—Mason Cty
Facility: Wash/Corr/Reception Ctr
*Okanogan
*Pend Oreille
Snohomish
Facility: Twin Rivers Corr Ctr
*Stevens
*Wahkiakum
*Walla Walla
Service Area: Tri-Cities
Facility: Wa State Pen
Yakima
Population Group: MSFW—Yakima Cty

MENTAL HEALTH: Washington
Service Area Listing

Service Area Name
Chelan/Douglas
County—Chelan
County—Douglas
Parts:
Low Inc
Tri-Cities
County—Benton
County—Franklin
County—Walla Walla
Parts:
Burbank Division

MENTAL HEALTH: Washington
Population Group Listing

Population Group
Low Inc—Cowlitz Co
County—Cowlitz
Low Inc—Lewis Co
County—Lewis
Low Inc—Mason Cty
County—Mason
MSFW—Yakima Cty
County—Yakima

MENTAL HEALTH: Washington
Facility Listing

Facility Name
Clallam Bay Corr Ctr
County—Clallam
Coyote Ridge Corr Ctr
County—Franklin
Twin Rivers Corr Ctr
County—Snohomish
Wa State Pen
County—Walla Walla
Wash/Corr/Reception Ctr
County—Mason

MENTAL HEALTH: West Virginia
County Listing

County Name
Berkeley
Service Area: Eastern Panhandle Ca
*Braxton
Service Area: Central (VI–2)
*Doddridge
Service Area: Central (VI–2)
*Gilmer
Service Area: Central (VI–2)
*Grant
Service Area: Petersburg (VIII)
*Greenbrier
Service Area: Seneca (IV)
*Hampshire
Service Area: Petersburg (VIII)
*Hardy
Service Area: Petersburg (VIII)
*Harrison
Service Area: Central (VI–2)
Jefferson
Service Area: Eastern Panhandle Ca
*Lewis
Service Area: Central (VI–2)
Facility: William R. Sharpe Hospital
*Logan
Service Area: Logan/Mingo (II–1)
*Marion
Facility: Fairmont General Hosp
*McDowell
Service Area: Mercer/Mcdowell/Wyoming (I–1)
*Mercer
Service Area: Mercer/Mcdowell/Wyoming (I–1)
*Mineral
Service Area: Petersburg (VIII)
*Mingo
Service Area: Logan/Mingo (II–1)
*Morgan
Service Area: Eastern Panhandle Ca
*Nicholas
Service Area: Seneca (IV)
*Pendleton
Service Area: Petersburg (VIII)
*Pocahontas
Service Area: Seneca (IV)
*Preston
Service Area: Valley (VI–1, Part)
*Taylor
Service Area: Valley (VI–1, Part)
*Webster
Service Area: Seneca (IV)
*Wyoming
Service Area: Mercer/Mcdowell/Wyoming (I–1)

MENTAL HEALTH: West Virginia
Service Area Listing

Service Area Name

Central (VI–2)
County—Braxton
County—Doddridge
County—Gilmer
County—Harrison
County—Lewis
Eastern Panhandle Ca
County—Berkeley
County—Jefferson
County—Morgan
Logan/Mingo (II–1)
County—Logan
County—Mingo
Mercer/Mcdowell/Wyoming (I–1)
County—McDowell
County—Mercer
County—Wyoming
Petersburg (VIII)
County—Grant
County—Hampshire
County—Hardy
County—Mineral
County—Pendleton
Seneca (IV)
County—Greenbrier
County—Nicholas
County—Pocahontas
County—Webster
Valley (VI–1, Part)
County—Preston
County—Taylor

MENTAL HEALTH: West Virginia
Facility Listing

Facility Name

Fairmont General Hosp
County—Marion
William R. Sharpe Hospital
County—Lewis

MENTAL HEALTH: Wisconsin
County Listing

County Name

*Adams
Service Area: Catchment Area 16
*Ashland
Service Area: Catchment Area 3
*Barron
Service Area: Catchment Area 2
*Bayfield
Service Area: Catchment Area 3
Brown
Facility: Green Bay Corr. I.
*Buffalo
Service Area: Catchment Area 9
*Burnett
Service Area: Catchment Area 2
*Clark
*Columbia
Service Area: Catchment Area 16
*Crawford
Service Area: Catchment Area 21
Facility: Prairie Du Chien Corr Inst
*Dodge
Facility: Dodge Corr Inst
Facility: Fox Lake Corr. I.
Facility: Waupun Corr Inst
*Door
Service Area: Catchment Area #6
*Douglas

MENTAL HEALTH: Wisconsin
County Listing

County Name

Service Area: Catchment Area 1
*Dunn
Service Area: Catchment Area 7
*Florence
Service Area: Catchment Area #6
*Fond Du Lac
Facility: Taycheedah Corr Inst
*Forest
Service Area: Catchment Area 4
*Grant
Service Area: Catchment Area 21
*Green
Service Area: Catchment Area 21
*Iowa
Service Area: Catchment Area 21
*Iron
Service Area: Catchment Area 3
*Jackson
Service Area: Catchment Area 9
Facility: Jackson Corr Inst
*Jefferson
*Juneau
Service Area: Catchment Area 15
*Lafayette
Service Area: Catchment Area 21
*Langlade
*Lincoln
*Marinette
Service Area: Catchment Area #6
*Marquette
Service Area: Catchment Area 16
*Menominee
Service Area: Catchment Area 11
Milwaukee
Service Area: Near North Side—Milwaukee
Facility: Milwaukee MH Complex
*Monroe
*Oconto
*Oneida
Service Area: Catchment Area 4
*Pepin
Service Area: Catchment Area 7
*Pierce
Service Area: Catchment Area 7
*Polk
Service Area: Catchment Area 2
*Price
Service Area: Catchment Area 3
Racine
Facility: Racine Corr I
Facility: Racine Youth Corr Ctr
*Richland
Service Area: Catchment Area 15
*Rusk
Service Area: Catchment Area 2
*Sauk
Service Area: Catchment Area 15
*Sawyer
Service Area: Catchment Area 3
*Shawano
Service Area: Catchment Area 11
Sheboygan
Facility: Kettle Moraine Corr I
*St. Croix
Service Area: Catchment Area 7
*Taylor
*Trempealeau
Service Area: Catchment Area 9
*Vernon
*Vilas
Service Area: Catchment Area 4
*Washburn

MENTAL HEALTH: Wisconsin
County Listing

County Name

Service Area: Catchment Area 2
Waukesha
Facility: Ethan Allen School
*Waupaca
Service Area: Catchment Area 11
*Waushara
Winnebage
Facility: Oshkosh Corr I
Facility: Wisconsin Resource Center

MENTAL HEALTH: Wisconsin
Service Area Listing

Service Area Name

Catchment Area 1
County—Douglas
Catchment Area #6
County—Door
County—Florence
County—Marinette
Catchment Area 11
County—Menominee
County—Shawano
County—Waupaca
Catchment Area 15
County—Juneau
County—Richland
County—Sauk
Catchment Area 16
County—Adams
County—Columbia
County—Marquette
Catchment Area 2
County—Barron
County—Burnett
County—Polk
County—Rusk
County—Washburn
Catchment Area 21
County—Crawford
County—Grant
County—Green
County—Iowa
County—Lafayette
Catchment Area 3
County—Ashland
County—Bayfield
County—Iron
County—Price
County—Sawyer
Catchment Area 4
County—Forest
County—Oneida
County—Vilas
Catchment Area 7
County—Dunn
County—Pepin
County—Pierce
County—St. Croix
Catchment Area 9
County—Buffalo
County—Jackson
County—Trempealeau
Near North Side—Milwaukee
County—Milwaukee
Parts:
C.T. 18–28
C.T. 38–49
C.T. 60–72
C.T. 79–92
C.T. 98–107
C.T. 114–116

MENTAL HEALTH: Wisconsin
Service Area Listing

Service Area Name
C.T. 141–142
C.T. 145

MENTAL HEALTH: Wisconsin
Facility Listing

Facility Name
Dodge Corr Inst
County—Dodge
Ethan Allen School
County—Waukesha
Fox Lake Corr. I.
County—Dodge
Green Bay Corr. I.
County—Brown
Jackson Corr Inst
County—Jackson
Kettle Moraine Corr I
County—Sheboygan
Milwaukee MH Complex
County—Milwaukee
Oshkosh Corr I
County—Winnebage
Prairie Du Chien Corr Inst
County—Crawford
Racine Corr I
County—Racine
Racine Youth Corr Ctr
County—Racine
Taycheedah Corr Inst
County—Fond Du Lac
Waupun Corr Inst
County—Dodge
Wisconsin Resource Center
County—Winnebage

MENTAL HEALTH: Wyoming
County Listing

County Name
*Campbell
Service Area: Northeast Wyoming MHCA
*Crook
Service Area: Northeast Wyoming MHCA
*Johnson
Service Area: Northeast Wyoming MHCA
*Sheridan
Service Area: Northeast Wyoming MHCA
*Uinta
Facility: Wyoming State Hosp
*Weston
Service Area: Northeast Wyoming MHCA

MENTAL HEALTH: Wyoming
Service Area Listing

Service Area Name
Northeast Wyoming MHCA
County—Campbell
County—Crook
County—Johnson
County—Sheridan
County—Weston

MENTAL HEALTH: Wyoming
Facility Listing

Facility Name
Wyoming State Hosp
County—Uinta

MENTAL HEALTH: American Samoa
County Listing

County Name
*Eastern
Service Area: Terr. Of American Samoa
*Manua
Service Area: Terr. Of American Samoa
*Rose Island
Service Area: Terr. Of American Samoa
*Swains Island
Service Area: Terr. Of American Samoa
*Western
Service Area: Terr. Of American Samoa

MENTAL HEALTH: American Samoa
Service Area Listing

Service Area Name
Terr. Of American Samoa
County—Eastern
County—Manua
County—Rose Island
County—Swains Island
County—Western

MENTAL HEALTH: Fed Ste Micronesia
County Listing

County Name
*Chuuk State
*Kosrae State
*Pohnpei State
*Yap State

MENTAL HEALTH: Guam
County Listing

County Name
*Guam
Service Area: Terr. Of Guam

MENTAL HEALTH: Guam
Service Area Listing

Service Area Name
Terr. Of Guam
County—Guam

MENTAL HEALTH: N. Mariana Islands
County Listing

County Name
*Northern Islands
Service Area: Commonwealth N. Marianas Islands
*Rota
Service Area: Commonwealth N. Marianas Islands
*Saipan
Service Area: Commonwealth N. Marianas Islands
*Tinian
Service Area: Commonwealth N. Marianas Islands

MENTAL HEALTH: N. Mariana Islands
Service Area Listing

Service Area Name
Commonwealth N. Marianas Islands
County—Northern Islands
County—Rota
County—Saipan
County—Tinian

MENTAL HEALTH: Republic of Palau
County Listing

County Name
*Republic Of Palau

MENTAL HEALTH: Puerto Rico
County Listing

County Name
*Adjuntas
Service Area: RSA 7
*Aguada
Service Area: RSA 1
*Aguadilla
Service Area: RSA 6
*Aguas Buenas
Service Area: Caguas (Sub-Region I)
*Aibonito
Service Area: RSA 21
*Anasco
Service Area: RSA 1
*Arecibo
Service Area: RSA 7
Facility: Sabana Hoyos Corr Detention Ctr
Facility: Sabana Hoyos Correctional Center
*Arroyo
Service Area: RSA 19
*Barceloneta
Service Area: RSA 7
*Barranquitas
Service Area: RSA 8
*Cabo Rojo
Service Area: RSA 3
*Caguas
Service Area: Caguas (Sub-Region I)
*Camuy
Service Area: RSA 4
*Canovanas
Service Area: RSA 14
*Carolina
Service Area: RSA 13
*Catano
Service Area: RSA 9
*Cayey
Service Area: RSA 21
*Ceiba
Service Area: RSA 14
*Ciales
Service Area: RSA 24
*Cidra
Service Area: Caguas (Sub-Region I)
*Coamo
Service Area: RSA 20
*Comerio
Service Area: RSA 8
*Corozal
Service Area: RSA 8
*Culebra
Service Area: RSA 14
*Dorado
Service Area: RSA 9
*Fajardo
Service Area: RSA 14
*Florida
Service Area: RSA 7
*Guanica
Service Area: RSA 2
*Guayama
Service Area: RSA 19
*Guayanilla
Service Area: RSA 2
*Guaynabo
*Gurabo
Service Area: Caguas (Sub-Region I)
*Hatillo

MENTAL HEALTH: Puerto Rico
County Listing

County Name

Service Area: RSA 4
*Hormiqueros
Service Area: RSA 3
*Humacao
Service Area: RSA 17
*Isabela
Service Area: RSA 6
*Jayuya
Service Area: RSA 7
*Juana Diaz
Service Area: RSA 20
*Juncos
Service Area: Caguas (Sub-Region I)
*Lajas
Service Area: RSA 3
*Lares
Service Area: RSA 4
*Las Marias
Service Area: RSA 4
*Las Piedras
Service Area: RSA 17
*Loiza
Service Area: RSA 14
*Luquillo
Service Area: RSA 14
*Manati
Service Area: RSA 24
*Maricao
Service Area: RSA 4
*Maunabo
Service Area: RSA 19
*Mayaguez
Service Area: RSA 1
*Moca
Service Area: RSA 6
*Morovis
Service Area: RSA 24
*Naguabo
Service Area: RSA 17
*Naranjito
Service Area: RSA 8
*Orocovis
Service Area: RSA 8
*Patillas
Service Area: RSA 19
*Penuelas
Service Area: RSA 2
*Quebradillas
Service Area: RSA 6
*Rincon
Service Area: RSA 1
*Rio Grande
Service Area: RSA 14
*Sabana Grande
Service Area: RSA 2
*Salinas
Service Area: RSA 20
*San German
Service Area: RSA 3
*San Lorenzo
Service Area: RSA 17
*San Sebastian
Service Area: RSA 4
*Santa Isabel
Service Area: RSA 20
*Toa Alta
Service Area: RSA 9
*Toa Baja
Service Area: RSA 9
*Trujillo Alto
Service Area: RSA 13
*Utuado

MENTAL HEALTH: Puerto Rico
County Listing

County Name

Service Area: RSA 7
*Vega Alta
Service Area: RSA 23
*Vega Baja
Service Area: RSA 23
*Vieques
Service Area: RSA 14
*Villalba
Service Area: RSA 20
*Yabucoa
Service Area: RSA 17
*Yauco
Service Area: RSA 2

MENTAL HEALTH: Puerto Rico
Service Area Listing

Service Area Name

Caguas (Sub-Region I)
County—Aguas Buenas
County—Caguas
County—Cidra
County—Gurabo
County—Juncos
RSA 1
County—Aguada
County—Anasco
County—Mayaguez
County—Rincon
RSA 13
County—Carolina
County—Trujillo Alto
RSA 14
County—Canovanas
County—Ceiba
County—Culebra
County—Fajardo
County—Loiza
County—Luquillo
County—Rio Grande
County—Vieques
RSA 17
County—Humacao
County—Las Piedras
County—Naguabo
County—San Lorenzo
County—Yabucoa
RSA 19
County—Arroyo
County—Guayama
County—Maunabo
County—Patillas
RSA 2
County—Guanica
County—Guayanilla
County—Penuelas
County—Sabana Grande
County—Yauco
RSA 20
County—Coamo
County—Juana Diaz
County—Salinas
County—Santa Isabel
County—Villalba
RSA 21
County—Aibonito
County—Cayey
RSA 23
County—Vega Alta
County—Vega Baja
RSA 24
County—Ciales

MENTAL HEALTH: Puerto Rico
Service Area Listing

Service Area Name

County—Manati
County—Morovis
RSA 3
County—Cabo Rojo
County—Hormiqueros
County—Lajas
County—San German
RSA 4
County—Camuy
County—Hatillo
County—Lares
County—Las Marias
County—Maricao
County—San Sebastian
RSA 6
County—Aguadilla
County—Isabela
County—Moca
County—Quebradillas
RSA 7
County—Adjuntas
County—Arecibo
County—Barceloneta
County—Florida
County—Jayuya
County—Utuado
RSA 8
County—Barranquitas
County—Comerio
County—Corozal
County—Naranjito
County—Orocovis
RSA 9
County—Catano
County—Dorado
County—Toa Alta
County—Toa Baja

MENTAL HEALTH: Puerto Rico
Facility Listing

Facility Name

Sabana Hoyos Corr Detention Ctr
County—Arecibo
Sabana Hoyos Correctional Center
County—Arecibo

MENTAL HEALTH: Virgin Islands
County Listing

County Name

*St. Croix
Service Area: Virgin Islands C.A.
*St. John
Service Area: Virgin Islands C.A.
*St. Thomas
Service Area: Virgin Islands C.A.

MENTAL HEALTH: Virgin Islands
Service Area Listing

Service Area Name

Virgin Islands C.A.
County—St. Croix
County—St. John
County—St. Thomas

DENTAL: Alabama
County Listing

County Name

Autauga

DENTAL: Alabama
County Listing

County Name

Population Group: Low Inc—Autauga Co
Baldwin
Population Group: Low Inc—DCA 27
*Barbour
Population Group: Low Inc—Barbour Co
Blount
Population Group: Low Inc—Blount
Calhoun
Population Group: Low Inc—Calhoun
*Chambers
Population Group: Low Inc—Chambers Co
*Cherokee
Population Group: Low Inc—Cherokee
*Choctaw
Population Group: Low Inc—Choctaw
*Clay
Population Group: Low Inc—Clay
*Cleburne
Population Group: Low Inc—Cleburn
*Conecuh
*Cullman
Population Group: Low Inc—Cullman
*Dallas
Population Group: Low Inc—DCA 16
*De Kalb
Population Group: Low Inc—Dekalb
Elmore
Population Group: Low Inc—Elmore Co
*Escambia
Population Group: Low Inc—Escambia County
Etowah
Population Group: Low Inc—Etowah Co
*Fayette
Population Group: Low Inc—DCA 8
*Greene
Population Group: Low Inc—DCA 17
*Hale
Population Group: Low Inc—DCA 17
*Jackson
Population Group: Low Inc—Jackson
*Lamar
Population Group: Low Inc—DCA 8
Lawrence
Population Group: Low Inc—Morgan/Lawrence
Limestone
Population Group: Low Inc—Limestone
Madison
Population Group: Low Inc—Central Madison Co
*Marion
Population Group: Low Inc—Marion
*Marshall
Population Group: Low Inc—Marshall
Mobile
Population Group: Low Inc—DCA 27
*Monroe
Montgomery
Population Group: Low Inc—W Montgomery
Morgan
Population Group: Low Inc—Morgan/Lawrence
*Perry
Population Group: Low Inc—DCA 16
*Pickens
Population Group: Low Inc—Pickens Co.
St Clair
Population Group: Low Inc—St. Clair
*Sumter
Population Group: Low Inc—Franklin Co.

DENTAL: Alabama
County Listing

County Name

*Talladega
Facility: FCI—Talladega
Tuscaloosa
Population Group: Low Inc—Tuscaloosa Co
*Walker
Population Group: Low Inc—Walker
*Winston
Population Group: Low Inc—Winston Co.

DENTAL: Alabama
Population Group Listing

Population Group

Low Inc—Autauga Co
County—Autauga
Parts:
Low Income
Low Inc—Barbour Co
County—Barbour
Parts:
Low Income
Low Inc—Blount
County—Blount
Parts:
Low Income
Low Inc—Calhoun
County—Calhoun
Parts:
Low Income
Low Inc—Central Madison Co
County—Madison
Parts:
Gurley CCD
Hazel Green CCD
Huntsville CCD
Madison Crossroads CCD
New Hope CCD
New Market CCD
Low Inc—Chambers Co
County—Chambers
Parts:
Low Inc
Low Inc—Cherokee
County—Cherokee
Parts:
Low Income
Low Inc—Choctaw
County—Choctaw
Parts:
Low Income
Low Inc—Clay
County—Clay
Parts:
Low Income
Low Inc—Cleburn
County—Cleburne
Parts:
Low Income
Low Inc—Cullman
County—Cullman
Parts:
Low Income
Low Inc—Dekalb
County—De Kalb
Parts:
Low Income
Low Inc—DCA 16
County—Dallas
Parts:
Low Income
County—Perry

DENTAL: Alabama
Population Group Listing

Population Group

Parts:
Low Income
Low Inc—DCA 17
County—Greene
Parts:
Greene
County—Hale
Parts:
Hale
Low Inc—DCA 27
County—Baldwin
Parts:
Baldwin
County—Mobile
Parts:
Mobile
Low Inc—DCA 8
County—Fayette
Parts:
Low Income
County—Lamar
Parts:
Low Income
Low Inc—Elmore Co
County—Elmore
Parts:
Low Income
Low Inc—Escambia County
County—Escambia
Parts:
Low-Income
Low Inc—Etowah Co
County—Etowah
Parts:
Low Income
Low Inc—Franklin Co.
County—Sumter
Parts:
Low Income
Low Inc—Jackson
County—Jackson
Parts:
Low Income
Low Inc—Limestone
County—Limestone
Parts:
Low Income
Low Inc—Marion
County—Marion
Parts:
Low Income
Low Inc—Marshall
County—Marshall
Parts:
Low Income
Low Inc—Morgan/Lawrence
County—Lawrence
Parts:
Low Income
County—Morgan
Parts:
Low Income
Low Inc—Pickens Co.
County—Pickens
Parts:
Low Income
Low Inc—St. Clair
County—St Clair
Parts:
Low Income
Low Inc—Tuscaloosa Co
County—Tuscaloosa

DENTAL: Alabama
Population Group Listing

Population Group

Parts:
Low Income
Low Inc—W Montgomery
County—Montgomery
Parts:
C.T. 1–2
C.T. 3.85
C.T. 4–7
C.T. 10–11
C.T. 13
C.T. 15–16
C.T. 22–24
C.T. 51.02
C.T. 59.02
Low Inc—Walker
County—Walker
Parts:
Low Income
Low Inc—Winston Co.
County—Winston
Parts:
Low Income

DENTAL: Alabama
Facility Listing

Facility Name

FCI—Talladega
County—Talladega

DENTAL: Alaska
Census Area Listing

Census Area Name

*Aleutians East Area
*Aleutians West Area
Anchorage Borough
Population Group: Low Inc—North Anchorage
*Bethel Area
*Bristol Bay Borough
*Denali Borough
*Dillingham Area
*Lake And Peninsula Borough
*North Slope Borough
*Northwest Arctic Borough
*Skagway-Hoonah-Angoon Borough
*Southeast-Fairbanks Area
*Wade Hampton
*Yakutat Borough
*Yukon-Koyukuk

DENTAL: Alaska
Population Group Listing

Population Group

Low Inc—North Anchorage
Census Area—Anchorage Borough
Parts:
C.T. 6
C.T. 7.01–7.03
C.T. 8.01

DENTAL: Arizona
County Listing

County Name

*Apache
Service Area: Fort Defiance
*Cochise
Service Area: Elfrida
*Coconino
Service Area: Williams
Population Group: Low Inc—Flagstaff
*Greenlee
*La Paz
Maricopa
Population Group: Low Inc—Buckeye
Population Group: Low Inc—Wickenburg
Population Group: Low Inc—S Mountain
Facility: FCI Phoenix
Facility: FCI Tucson
Facility: Maricopa Co Jails
Pima
Service Area: South Tucson
Facility: FCI Tucson
Pinal
Service Area: Florence
Service Area: San Manuel
Population Group: Low Inc—Coolidge/Eloy/Casa Grande
*Santa Cruz
Yuma
Service Area: Wellton
Population Group: Low Inc—Somerton
Population Group: Low Income—Yuma

DENTAL: Arizona
Service Area Listing

Service Area Name

Elfrida
County—Cochise
Parts:
C.T. 5
Florence
County—Pinal
Parts:
C.T. 8–9
Fort Defiance
County—Apache
Parts:
Fort Apache Division
San Manuel
County—Pinal
Parts:
C.T. 6–7
South Tucson
County—Pima
Parts:
C.T. 1–12
C.T. 13.01–13.02
C.T. 14
C.T. 20–24
C.T. 25.01–25.02
C.T. 37.01–37.03
C.T. 38–39
C.T. 41.02–41.04
C.T. 43.01
C.T. 43.09
Wellton
County—Yuma
Parts:
C.T. 105–107
C.T. 112–113
Williams
County—Coconino
Parts:
C.T. 17–19

DENTAL: Arizona
Population Group Listing

Population Group

Low Inc—Buckeye 1
County—Maricopa
Parts:
C.T. 506–507
Low Inc—Flagstaff
County—Coconino
Parts:
C.T. 1–15
Low Inc—S Mountain
County—Maricopa
Parts:
C.T. 1152–1161
C.T. 1162.02–1162.04
C.T. 1163–1165
C.T. 1166.01–1166.02
C.T. 1167.02–1167.04
Low Inc—Somerton
County—Yuma
Parts:
Somerton CCD
Low Inc—Wickenburg
County—Maricopa
Parts:
C.T. 405.02
C.T. 405.09
Low Inc—Coolidge/Eloy/Casa Grande
County—Pinal
Parts:
Casa Grande CCD
Coolidge CCD
Eloy CCD
Manicopa-Stanfield
Low Income—Yuma
County—Yuma
Parts:
Yuma CCD

DENTAL: Arizona
Facility Listing

Facility Name

FCI Phoenix
County—Maricopa
FCI Tucson
County—Pima
FCI Tucson
County—Maricopa
Maricopa Co Jails
County—Maricopa

DENTAL: Arkansas
County Listing

County Name

*Ashley
Service Area: Parkdale
*Calhoun
*Cleveland
*Fulton
*Grant
Jefferson
Service Area: Altheimer
*Lafayette
*Lee
*Lincoln
*Monroe
*Montgomery
*Newton
*Perry
*Phillips
*Poinsett
Service Area: Marked Tree
*Prairie

DENTAL: Arkansas
County Listing

County Name

Pulaski
  Service Area: College Station
*Searcy
*Sharp
*Woodruff

DENTAL: Arkansas
Service Area Listing

Service Area Name

Altheimer
  County—Jefferson
    Parts:
      C.T. 1.85
      C.T. 7
College Station
  County—Pulaski
    Parts:
      C.T. 2
      C.T. 4–5
      C.T. 40.01
      C.T. 40.03
      C.T. 40.05
Marked Tree
  County—Poinsett
    Parts:
      Greenwood Township
      Little River Township
      Tyronza Township
Parkdale
  County—Ashley
    Parts:
      Beech Creek Township
      De Bastrop Township
      Portland Township
      Wilmot Township

DENTAL: California
County Listing

County Name

Alameda
  Population Group: Low Inc—Fruitvale (MSSA 2d)
Butte
  Population Group: Low Inc—Oroville/Palermo(MSSA 10)
*Colusa
  Population Group: Low Inc/MFW—Colusa Co
Contra Costa
  Population Group: Low Inc—Antioch/Pittsburg North (MSSA
*Del Norte
  Population Group: Low Inc—Del Norte Co (MSSA 19)
Fresno
  Population Group: Low Inc—San Joaquin/Tranquility
  Population Group: Low Inc—Reedley (MSSA 34)
*Glenn
  Population Group: Low Inc—Willows
*Humboldt
  Service Area: Garberville/Redway (MSSA 44)
  Population Group: Low Inc—Trinity/Klamath
  Population Group: Low Inc—Rio Dell (MSSA 43)
  Population Group: Low Inc—Fortuna (MSSA 42)

DENTAL: California
County Listing

County Name

  Population Group: Low Inc—Ferndale (MSSA 41)
  Population Group: Low Inc—Arcata/North Coastal (MSSA 39)
*Imperial
  Service Area: Calexico—MSSA 49
  Service Area: East Imperial—MSSA 47
Kern
  Service Area: Arvin-Lamont (MSSA 61)
  Service Area: Buttonwillow
  Population Group: Low Inc—Mcfarland/Delano (MSSA 60)
  Population Group: Low Inc—Shafter/Wasco (MSSA 58)
  Population Group: Low Inc—N Westside/Taft (MSSA 57.2)
*Lake
  Population Group: Low Inc—Lakeport (MSSA 70)
*Lassen
  Population Group: Low Inc—Susanville
Los Angeles
  Population Group: Low Inc—Watts/Willowbrook
  Facility: FCI Terminal Island
*Mendocino
  Service Area: Covelo
  Population Group: Low Income—Laytonville (MSSA 90)
Monterey
  Service Area: Greenfield/Soledad/Gonzales
  Service Area: King City
  Population Group: Low-Income—N. Salinas (MSSA 109.2a)
San Diego
  Population Group: Low Inc—Fallbrook (MSSA 160)
San Francisco
  Population Group: Low Inc—South Of Market (MSSA 162c)
Santa Barbara
  Facility: USP Lompoc
Shasta
  Service Area: Castella (MSSA 187)
  Service Area: French Gulch (MSSA 186)
  Population Group: Low Inc—Redding (MSSAS 189.1 & 189.2)
*Sierra
  Service Area: West Sierra (MSSA 192)
*Siskiyou
  Service Area: Tulake (MSSA 101.2)
Sonoma
  Service Area: Guerneville (MSSA 207)
*Tehama
  Population Group: Low Inc—Red Bluff (MSSAS 221 & 222)
*Trinity
  Service Area: Hayfork/Forest Glen/Peanut (MSSA 225)
  Service Area: L. Trinity/Helena/Salyer (MSSA 223)
  Service Area: Weaverville, Trinity Ctr (MSSA 224)
Tulare
  Population Group: Low Inc—Porterville (MSSA 231/232)
  Population Group: Low Inc—Visalia (MSSA 233a)

DENTAL: California
Service Area Listing

Service Area Name

Arvin-Lamont(MSSA 61)
  County—Kern
    Parts:
      C.T. 62–64
Buttonwillow
  County—Kern
    Parts:
      C.T. 37
Calexico—MSSA 49
  County—Imperial
    Parts:
      C.T. 119–122
Castella (MSSA 187)
  County—Shasta
    Parts:
      C.T. 125
Covelo
  County—Mendocino
    Parts:
      C.T. 101
East Imperial—MSSA 47
  County—Imperial
    Parts:
      C.T. 124
French Gulch (MSSA 186)
  County—Shasta
    Parts:
      C.T. 124
Garberville/Redway (MSSA 44)
  County—Humboldt
    Parts:
      C.T. 113
Greenfield/Soledad/Gonzales
  County—Monterey
    Parts:
      C.T. 108.98
      C.T. 109
      C.T. 111–112
Guerneville (MSSA 207)
  County—Sonoma
    Parts:
      C.T. 1537.01–1537.02
      C.T. 1543
      C.T. 1543.99
Hayfork/Forest Glen/Peanut (MSSA 225)
  County—Trinity
    Parts:
      C.T. 3.98
King City
  County—Monterey
    Parts:
      C.T. 113
      C.T. 114.02
L. Trinity/Helena/Salyer (MSSA 223)
  County—Trinity
    Parts:
      C.T. 2
Tulake (MSSA 101.2)
  County—Siskiyou
    Parts:
      C.T. 1
Weaverville, Trinity Ctr (MSSA 224)
  County—Trinity
    Parts:
      C.T. 1
West Sierra (MSSA 192)
  County—Sierra
    Parts:
      West Sierra Division

DENTAL: California
Population Group Listing

Population Group

Low Inc—Antioch/Pittsburg North (MSSA
County—Contra Costa
Parts:
C.T. 3050
C.T. 3071.02
C.T. 3072.01–3072.02
C.T. 3072.04–3072.05
C.T. 3090
C.T. 3100
C.T. 3110
C.T. 3120
C.T. 3132.01–3132.02
C.T. 3141.01–3141.02
C.T. 3142
C.T. 3142.98
C.T. 3552
Low Inc—Arcata/North Coastal (MSSA 39)
County—Humboldt
Parts:
C.T. 10–11
C.T. 102–105
Low Inc—Del Norte Co (MSSA 19)
County—Del Norte
Parts:
C.T. 1
C.T. 1.99–2.00
Low Inc—Fallbrook (MSSA 160)
County—San Diego
Parts:
C.T. 187
C.T. 188.01–188.03
C.T. 189.01–189.02
C.T. 190
Low Inc—Ferndale (MSSA 41)
County—Humboldt
Parts:
C.T. 112
Low Inc—Fortuna (MSSA 42)
County—Humboldt
Parts:
C.T. 108–110
Low Inc—Fruitvale (MSSA 2d)
County—Alameda
Parts:
C.T. 4061–4062
C.T. 4065–4066
C.T. 4070–4075
Low Inc—Lakeport (MSSA 70)
County—Lake
Parts:
C.T. 1–5
C.T. 10
Low Inc—Mcfarland/Delano (MSSA 60)
County—Kern
Parts:
C.T. 46–48
C.T. 49.01–49.02
C.T. 50
Low Inc—N Westside/Taft (MSSA 57.2)
County—Kern
Parts:
C.T. 33.03–33.04
C.T. 34–36
Low Inc—Porterville (MSSA 231/232)
County—Tulare
Parts:
C.T. 27
C.T. 33–41
C.T. 45
Low Inc—Red Bluff (MSSAS 221 & 222)
County—Tehama
Parts:

DENTAL: California
Population Group Listing

Population Group

C.T. 2
C.T. 4–11
C.T. 12.98
Low Inc—Redding (MSSAS 189.1 & 189.2)
County—Shasta
Parts:
C.T. 101–123
Low Inc—Reedley (MSSA 34)
County—Fresno
Parts:
C.T. 63
C.T. 65
C.T. 66.01–66.02
C.T. 67
C.T. 68.01–68.02
C.T. 69
Low Inc—Rio Dell (MSSA 43)
County—Humboldt
Parts:
C.T. 111
Low Inc—San Joaquin/Tranquility
County—Fresno
Parts:
C.T. 82
Low Inc—Shafter/Wasco (MSSA 58)
County—Kern
Parts:
C.T. 39–45
Low Inc—South Of Market (MSSA 162c)
County—San Francisco
Parts:
C.T. 122–125
C.T. 176.02
C.T. 176.98
C.T. 177–178
C.T. 179.01–179.02
C.T. 179.99–180.00
C.T. 201.98
C.T. 226–229
C.T. 607
Low Inc—Susanville
County—Lassen
Parts:
Honey Lake Div
Madeline Plains Div
Susanville Div
Westwood Div
Low Inc—Trinity/Klamath
County—Humboldt
Parts:
C.T. 101
Low Inc—Visalia (MSSA 233a)
County—Tulare
Parts:
C.T. 9
C.T. 10.01–10.02
C.T. 11–13
C.T. 17.01–17.02
C.T. 18–19
C.T. 20.01–20.05
Low Inc—Watts/Willowbrook
County—Los Angeles
Parts:
C.T. 2408–2410
C.T. 2420–2423
C.T. 2426–2427
C.T. 2430–2431
C.T. 5352
C.T. 5404
C.T. 5406–5408
C.T. 5412–5414
Low Inc—Willows

DENTAL: California
Population Group Listing

Population Group

County—Glenn
Parts:
C.T. 103–105
Low Inc–Oroville/Palermo (MSSA 10)
County—Butte
Parts:
C.T. 25–33
Low Inc/MFW—Colusa Co
County—Colusa
Parts:
Low Income/MFW
Low Income—Laytonville (MSSA 90)
County—Mendocino
Parts:
C.T. 102
Low–Income—N. Salinas (MSSA 109.2a)
County—Monterey
Parts:
C.T. 1–9
C.T. 13
C.T. 17–18
C.T. 105.01–105.02
C.T. 106.01–106.02

DENTAL: California
Facility Listing

Facility Name

FCI Terminal Island 1
County—Los Angeles
USP Lompoc
County—Santa Barbara

DENTAL: Colorado
County Listing

County Name

Adams
Service Area: Commerce City
Population Group: Low Income—Northwest Adams
*Alamosa
Population Group: Low Inc—Alamosa Co
*Conejos
*Costilla
Denver
Facility: Denver Reception & Diagnostic Center
Facility: Denver Women's C.F.
Douglas
Facility: FCI Englewood
*Fremont
Facility: Centennial C.F.
Facility: Colorado State Penn
Facility: Colorado Territorial C.F.
Facility: Florence Admax USP
Facility: Freemont C.F.
Facility: FCI Florence
Facility: USP Florence
*Kiowa
*Morgan
Population Group: Low Income/MSFW—Morgan Co
*Prowers
Population Group: Low Inc—Prowers Co
Pueblo
Population Group: Low Inc/MFW—Pueblo Co
*Saguache

DENTAL: Colorado
Service Area Listing

Service Area Name
Commerce City
County—Adams
Parts:
C.T. 87.03
C.T. 87.05–87.06
C.T. 88.01–88.02
C.T. 89.01
C.T. 89.52

DENTAL: Colorado
Population Group Listing

Population Group
Low Inc—Alamosa Co
County—Alamosa
Parts:
Low Income
Migrant Farmworker
Low Inc—Prowers Co
County—Prowers
Parts:
Prowers
Low Inc/MFW—Pueblo Co
County—Pueblo
Parts:
Low Income/MFW
Low Income—Northwest Adams
County—Adams
Parts:
C.T. 90.01–90.03
C.T. 93.06–93.10
C.T. 93.15–93.18
C.T. 94.01
C.T. 94.07
C.T. 95.01–95.02
C.T. 95.53
C.T. 96.03–96.06
C.T. 97.50
Low Income/MSFW—Morgan Co
County—Morgan
Parts:
Low-Income/MSFW

DENTAL: Colorado
Facility Listing

Facility Name
Centennial C.F.
County—Fremont
Colorado State Penn
County—Fremont
Colorado Territorial C.F.
County—Fremont
Denver Reception & Diagnostic Center
County—Denver
Denver Women's C.F.
County—Denver
Florence Admax USP
County—Fremont
Freemont C.F.
County—Fremont
FCI Englewood
County—Douglas
FCI Florence
County—Fremont
USP Florence
County—Fremont

DENTAL: Connecticut
County Listing

County Name
Fairfield
Service Area: Central/East Bridgeport
Service Area: Southwest Bridgeport
Population Group: Low Inc—Southend Stamford
Population Group: Low Inc—Danbury
Hartford
Service Area: Charter Oak/Frog Hollow/Parkville
Service Area: North/Northcentral Hartford
Population Group: Low Inc—East Hartford
Population Group: Low Inc—Central New Britain
Middlesex
Population Group: Low Inc/Homeless—Cent Middletown
New Haven
Service Area: S. Cent Waterbury
Population Group: Low Inc—Meriden
New London
Population Group: Low Inc—Norwich
Population Group: Low Inc—New London (Inner City)
Windham
Population Group: Low Inc—Town Of Windham

DENTAL: Connecticut
Service Area Listing

Service Area Name
Central/East Bridgeport
County—Fairfield
Parts:
C.T. 713–717
C.T. 735–736
C.T. 738–744
Charter Oak/Frog Hollow/Parkville
County—Hartford
Parts:
C.T. 5001–5004
C.T. 5019
C.T. 5027–5030
C.T. 5043
C.T. 5045–5046
C.T. 5049
North/Northcentral Hartford
County—Hartford
Parts:
C.T. 5008–5015
C.T. 5017–5018
C.T. 5035
C.T. 5037
S. Cent Waterbury
County—New Haven
Parts:
C.T. 3501–3506
C.T. 3508
C.T. 3512
C.T. 3514
C.T. 3517
Southwest Bridgeport
County—Fairfield
Parts:
C.T. 702–712

DENTAL: Connecticut
Population Group Listing

Population Group
Low Inc—Central New Britain 2
County—Hartford
Parts:
C.T. 4159
C.T. 4161–4162
C.T. 4171
Low Inc—Danbury
County—Fairfield
Parts:
C.T. 2012
C.T. 2101
Low Inc—East Hartford
County—Hartford
Parts:
C.T. 5102–5104
C.T. 5106
Low Inc—Meriden
County—New Haven
Parts:
C.T. 1701.01
C.T. 1702.01–1702.02
C.T. 1702.02
C.T. 1703
C.T. 1710
C.T. 1713–1715
Low Inc—New London (Inner City)
County—New London
Parts:
C.T. 6901
C.T. 6901.99–6902.00
C.T. 6902.99–6903.00
C.T. 6904–6906
C.T. 6906.99–6907.00
C.T. 6907.99–6908.00
C.T. 6909
Low Inc—Norwich
County—New London
Parts:
C.T. 6961
C.T. 6964–6970
Low Inc—Southend Stamford
County—Fairfield
Parts:
C.T. 201
C.T. 214–215
C.T. 222–223
Low Inc—Town Of Windham
County—Windham
Parts:
Windham Town
Low Inc/Homeless—Cent Middletown
County—Middlesex
Parts:
C.T. 5415–5418

DENTAL: Delaware
County Listing

County Name
New Castle
Service Area: Southbridge
Service Area: Wilmington
*Sussex

DENTAL: Delaware
Service Area Listing

Service Area Name
Southbridge
County—New Castle
Parts:
C.T. 19
C.T. 153–155
Wilmington
County—New Castle

DENTAL: Delaware
Service Area Listing

Service Area Name

Parts:
C.T. 1
C.T. 6.01–6.02
C.T. 7–9
C.T. 15–17
C.T. 20–23

DENTAL: District Of Columbia
County Listing

County Name

Dist Of Columbia
Population Group: Homeless—Downtown D.C.

DENTAL: District Of Columbia
Population Group Listing

Population Group

Homeless—Downtown D.C.
County—Dist Of Columbia
Parts:
C.T. 40.01–40.02
C.T. 41
C.T. 42.02
C.T. 46–47
C.T. 48.01–48.02
C.T. 49.01–49.02
C.T. 50–51
C.T. 52.10
C.T. 52.20
C.T. 53.01–53.02
C.T. 54.01–54.02
C.T. 55.01–55.02
C.T. 56
C.T. 57.01–57.02
C.T. 58–59

DENTAL: Florida
County Listing

County Name

Alachua
Facility: Gainesville Corr Inst
*Baker
Facility: Baker Corr Inst
Bradford
Facility: Fl State Prison
Facility: Lawtey Corr Inst
Brevard
Facility: Brevard Corr Inst
Broward
Facility: Broward Corr Inst
*Calhoun
Facility: Calhoun Corr Inst
Charlotte
Population Group: Low Inc—Charlotte
Facility: Charlotte Corr Inst
*Citrus
Population Group: Low Inc—Citrus
Collier
Service Area: Everglades
Service Area: Immokalee
*Columbia
Facility: Columbia Corr Inst
Dade
Service Area: Homestead
Service Area: Model Cities
Population Group: Low Inc—South Beach
Population Group: Low Inc—North Beach
Facility: Dade Corr Inst
Facility: FCI Miami

DENTAL: Florida
County Listing

County Name

Facility: S Fl Reception Ctr
*De Soto
Population Group: Low Inc/MFW—Desoto
Facility: Desoto Corr Inst
*Dixie
Population Group: Low Inc—Dixie
Facility: Cross City Corr Inst
Duval
Population Group: Low Inc—NW Jacksonville
Escambia
Population Group: Low Inc—NW Escambia
Facility: Century Corr Inst
*Franklin
Population Group: Low Inc—Franklin
Gadsden
Population Group: Low Inc/MFW—Gadsden Co
*Gilchrist
Population Group: Low Inc—Gilchrist
Facility: Lancaster Corr Inst
*Glades
*Gulf
Population Group: Low Inc—Gulf Co
Facility: Gulf Corr Inst
*Hamilton
Population Group: Low Inc—Hamilton Co
Facility: Hamilton Corr Inst
*Hardee
Population Group: Low Inc/MFW—Hardee Co
Facility: Hardee Corr Inst
*Hendry
Hernando
Population Group: Low Inc—Hernando Co
*Highlands
Population Group: Low Inc/MFW—Highlands Co
Facility: Avon Park Corr Inst
Hillsborough
Population Group: Low Inc—Suitcase City
Population Group: Low Inc/MFW—Ruskin/Apollo Beach
Population Group: Low Inc/MFW—Plant City/Dover
*Holmes (g)
Facility: Holmes Corr Inst
*Indian River
Population Group: Low Inc/MFW Fellsmere
Facility: Hendry Corr Inst
Facility: Indian River Corr Inst
*Jackson
Facility: Apalachee Corr Inst
Facility: FCI—Marianna
Facility: Jackson Corr Inst
Facility: River Junction Corr Inst
*Jefferson
Population Group: Low Inc—Jefferson
Facility: Jefferson Corr Inst
*Lafayette
Population Group: Low Inc—Lafayette
Facility: Mayo Corr Inst
Lake
Population Group: MFW—Lake Co
Facility: Lake Corr Inst
Leon
Population Group: Low Inc—Bond Community
*Levy
Population Group: Low Inc—Levy
*Liberty
Facility: Liberty Corr Inst

DENTAL: Florida
County Listing

County Name

*Madison
Population Group: Low Inc—Madison
Facility: Madison Corr Inst
Manatee
Population Group: MFW—Manatee
Marion
Facility: Florida Corr Inst
Martin
Service Area: Indiantown
Facility: Martin Corr Inst
Nassau
Population Group: Low Inc/MFW—Nassau
Okaloosa
Facility: Okaloosa Corr Inst
*Okeechobee
Population Group: Low Inc—Okeechobee
Orange
Facility: C Fl Reception Ctr
Palm Beach
Population Group: Low Inc—West Palm Beach
Population Group: Low Inc/MFW—Belle Glade/Pahokee
Pasco
Service Area: Eastern Pasco
Facility: Zephyrhills Corr Inst
Pinellas
Facility: Pinellas Cty Correctional Institution
Polk
Service Area: Frostproof
Facility: Polk Corr Inst
*Putnam
Population Group: Low Inc—Putnam
Santa Rosa
Facility: Santa Rosa Corr Inst
St Lucie
Population Group: Low Inc—Central Ft. Pierce
*Sumter
Population Group: Low Inc—Sumter
Facility: FCC Coleman
Facility: Sumter Corr Inst
*Suwannee
Population Group: Low Inc—Suwannee Co
*Taylor
Population Group: Low Inc—Taylor
*Union
Facility: N Fl Reception Ctr
Facility: Union Corr Inst
Volusia
Facility: Tomoka Corr Inst
*Wakulla
Population Group: Low Inc—Wakulla Co
*Walton (g)
Facility: Walton Corr Inst
*Washington
Population Group: Low Inc—Washington Co

DENTAL: Florida
Service Area Listing

Service Area Name

Eastern Pasco
County—Pasco
Parts:
C.T. 320.01–320.02
C.T. 321.01–321.02
C.T. 322–329
C.T. 330.01–330.04
C.T. 331
Everglades

DENTAL: Florida
Service Area Listing

Service Area Name

County—Collier
Parts:
C.T. 111.01–111.02
Frostproof
County—Polk
Parts:
Frostproof Division
Homestead
County—Dade
Parts:
C.T. 104–105
C.T. 106.02
C.T. 107.01
C.T. 108–109
C.T. 110.01–110.02
C.T. 111
C.T. 112.01–112.02
C.T. 113
C.T. 114.98
Immokalee
County—Collier
Parts:
C.T. 112.02–112.03
C.T. 113–114
Indiantown
County—Martin
Parts:
C.T. 18
Model Cities
County—Dade
Parts:
C.T. 4.08
C.T. 8.01–8.02
C.T. 9.01–9.03
C.T. 10.01–10.04
C.T. 11.03
C.T. 15.01–15.02
C.T. 16.01–16.02
C.T. 17.01–17.02
C.T. 18.01–18.03
C.T. 19.01
C.T. 19.03–19.04
C.T. 23

DENTAL: Florida
Population Group Listing

Population Group

Low Inc—Washington Co
County—Washington
Parts:
Low Income
Low Inc—Bond Community
County—Leon
Parts:
C.T. 1
C.T. 4–6
C.T. 10.01
C.T. 11.01–11.02
C.T. 12–14
Low Inc—Central Ft. Pierce
County—St Lucie
Parts:
C.T. 1
C.T. 1.99–2.00
C.T. 3–5
C.T. 9.02
Low Inc—Charlotte
County—Charlotte
Parts:
Low Income
Low Inc—Citrus

DENTAL: Florida
Population Group Listing

Population Group

County—Citrus
Parts:
Low Income
Low Inc—Dixie
County—Dixie
Parts:
Low Income
Low Inc—Franklin
County—Franklin
Parts:
Low Income
Low Inc—Gilchrist
County—Gilchrist
Parts:
Low Income
Low Inc—Gulf Co
County—Gulf
Parts:
Low Income
Low Inc—Hamilton Co
County—Hamilton
Parts:
Low Income
Low Inc—Hernando Co
County—Hernando
Parts:
Low Income
Low Inc—Jefferson
County—Jefferson
Parts:
Low Inc
Low Inc—Lafayette
County—Lafayette
Parts:
Low Income
Low Inc—Levy
County—Levy
Parts:
Low Income
Low Inc—Madison
County—Madison
Parts:
Low Income
Low Inc—North Beach
County—Dade
Parts:
C.T. 39.01–39.02
C.T. 39.04–39.06
Low Inc—NW Escambia
County—Escambia
Parts:
C.T. 38–40
Low Inc—NW Jacksonville
County—Duval
Parts:
C.T. 1
C.T. 1.99–2.00
C.T. 2.99–3.00
C.T. 3.99–4.00
C.T. 5
C.T. 9–19
C.T. 26–29
C.T. 107–109
C.T. 112–116
C.T. 118
C.T. 121
Low Inc—Okeechobee
County—Okeechobee
Parts:
Low Income
Low Inc—Putnam
County—Putnam

DENTAL: Florida
Population Group Listing

Population Group

Parts:
Low Income
Low Inc—South Beach
County—Dade
Parts:
C.T. 42–45
C.T. 45.99
Low Inc—Suitcase City
County—Hillsborough
Parts:
C.T 3
C.T. 2
C.T. 4
C.T. 6–9
C.T. 105
C.T. 108.05–108.07
C.T. 112.06
Low Inc—Sumter
County—Sumter
Parts:
Low Income
Low Inc—Suwannee Co
County—Suwannee
Parts:
Low Income
Low Inc—Taylor
County—Taylor
Parts:
Low Income
Low Inc—Wakulla Co
County—Wakulla
Parts:
Low Income
Low Inc—West Palm Beach
County—Palm Beach
Parts:
C.T. 20–24
C.T. 26
Low Inc/MFW—Belle Glade/Pahokee
County—Palm Beach
Parts:
C.T. 80.01–80.02
C.T. 81.01–81.02
C.T. 82.01–82.03
C.T. 83.01–83.02
Low Inc/MFW—Desoto
County—De Soto
Parts:
Low Income/MFW
Low Inc/MFW—Gadsden Co
County—Gadsden
Parts:
Low Income/Migrant Farmw
Low Inc/MFW—Hardee Co
County—Hardee
Parts:
Low Income/Migrant Farmw
Low Inc/MFW—Highlands Co
County—Highlands
Parts:
Low Income/MFW
Low Inc/MFW—Nassau
County—Nassau
Parts:
Low Income/MFW
Low Inc/MFW—Plant City/Dover
County—Hillsborough
Parts:
C.T. 101.02–101.04
C.T. 124–131
Low Inc/MFW—Ruskin/Apollo Beach
County—Hillsborough

DENTAL: Florida
Population Group Listing

Population Group

Parts:
C.T. 140.02
C.T. 141.01
C.T. 141.03–141.04
Low Inc/MFW Fellsmere
County—Indian River
Parts:
Fellsmere Division
MFW—Lake Co
County—Lake
Parts:
MFW
MFW—Manatee
County—Manatee
Parts:
C.T. 13
C.T. 14.01–14.02
C.T. 15.01
C.T. 16
C.T. 19.01
C.T. 19.03–19.04

DENTAL: Florida
Facility Listing

Facility Name

Apalachee Corr Inst 3
County—Jackson
Avon Park Corr Inst
County—Highlands
Baker Corr Inst
County—Baker
Brevard Corr Inst
County—Brevard
Broward Corr Inst
County—Broward
C Fl Reception Ctr
County—Orange
Calhoun Corr Inst
County—Calhoun
Century Corr Inst
County—Escambia
Charlotte Corr Inst
County—Charlotte
Columbia Corr Inst
County—Columbia
Cross City Corr Inst
County—Dixie
Dade Corr Inst
County—Dade
Desoto Corr Inst
County—De Soto
Fl State Prison
County—Bradford
Florida Corr Inst
County—Marion
FCC Coleman
County—Sumter
FCI—Marianna
County—Jackson
FCI Miami
County—Dade
Gainesville Corr Inst
County—Alachua
Gulf Corr Inst
County—Gulf
Hamilton Corr Inst
County—Hamilton
Hardee Corr Inst
County—Hardee
Hendry Corr Inst
County—Indian River

DENTAL: Florida
Facility Listing

Facility Name

Holmes Corr Inst
County—Holmes
Indian River Corr Inst
County—Indian River
Jackson Corr Inst
County—Jackson
Jefferson Corr Inst
County—Jefferson
Lake Corr Inst
County—Lake
Lancaster Corr Inst
County—Gilchrist
Lawtey Corr Inst
County—Bradford
Liberty Corr Inst
County—Liberty
Madison Corr Inst
County—Madison
Martin Corr Inst
County—Martin
Mayo Corr Inst
County—Lafayette
N Fl Reception Ctr
County—Union
Okaloosa Corr Inst
County—Okaloosa
Pinellas Cty Correctional Institution
County—Pinellas
Polk Corr Inst
County—Polk
River Junction Corr Inst
County—Jackson
S Fl Reception Ctr
County—Dade
Santa Rosa Corr Inst
County—Santa Rosa
Sumter Corr Inst
County—Sumter
Tomoka Corr Inst
County—Volusia
Union Corr Inst
County—Union
Walton Corr Inst
County—Walton
Zephyrhills Corr Inst
County—Pasco

DENTAL: Georgia
County Listing

County Name

*Atkinson
*Banks
*Ben Hill
Bibb
Facility: Middle Ga Corr Complex
*Brantley
*Brooks
Bryan
*Burke
*Butts (g)
Facility: Ga Diagnostic Prison
*Calhoun
Facility: Calhoun State Prison
*Camden
*Candler
*Charlton
Chatham
Service Area: NW Savannah
Facility: Costal State Prison
*Colquitt
Population Group: Low Inc—Colquitt

DENTAL: Georgia
County Listing

County Name

*Crawford
Dade
Population Group: Low Inc—Dade
*Dawson
Population Group: Low Inc—Dawson Co
De Kalb
Facility: Marietta Health Center
Facility: Metro State Prison
*Dodge
Facility: Dodge State Prison
Dougherty
Population Group: Low Inc—Dougherty
Forsyth
Facility: Phillips State Prison
Fulton
Service Area: Atlanta Southside
Service Area: West Atlanta
Facility: Douglas Health Center
Facility: Good Samaritan Hlth Ctr
Facility: Metro Corr Inst
Facility: Procare At Midtown, Inc.
Facility: Smyrna Health Center
Facility: USP Atlanta
*Greene
Population Group: Low Inc—Greene
*Hancock
Population Group: Low Inc—Hancock
Facility: Hancock State Prison
*Haralson
Population Group: Low Inc—Haralson
Harris
Henry
*Jenkins
*Lamar
Population Group: Low Inc—Lamar
*Liberty
*Lincoln
Population Group: Low Inc—Lincoln
*Long
*Macon
*Marion
*Murray
Population Group: Low Inc—Murray Co
Paulding
*Pike
Population Group: Low Inc—Pike
*Pulaski
*Putnam
*Randolph
*Stewart
Service Area: Stewart/Webster
*Sumter
Population Group: Low Inc—Sumter
*Talbot
*Tattnall
*Taylor
Twiggs
*Union
Population Group: Low Inc—Union Co
*Ware
Population Group: Low Inc—Ware Co
*Warren
*Washington
*Wayne
Facility: FCI—Jesup
*Webster
Service Area: Stewart/Webster
*Whitfield
Population Group: Low Inc—Whitfield
*Wilcox (g)
Facility: Wilcox State Prison
*Wilkinson

DENTAL: Georgia
County Listing

County Name

Population Group: Low Inc—Wilkinson Co
*Worth
Population Group: Low Inc—Worth

DENTAL: Georgia
Service Area Listing

Service Area Name

Atlanta Southside
County—Fulton
Parts:
C.T. 44
C.T. 46.95
C.T. 48
C.T. 49.95
C.T. 50
C.T. 52–53
C.T. 55.01–55.02
C.T. 56–58
C.T. 63–64
C.T. 67
C.T. 68.01–68.02
C.T. 69–73
NW Savannah
County—Chatham
Parts:
C.T. 1
C.T. 3
C.T. 6.01
C.T. 8–13
C.T. 15
C.T. 17–28
C.T. 32
C.T. 33.01–33.02
C.T. 36.01–36.02
C.T. 37
C.T. 44–45
C.T. 101.01
C.T. 105.01–105.02
C.T. 106.01
C.T. 106.03–106.04
Stewart/Webster
County—Stewart
County—Webster
West Atlanta
County—Fulton
Parts:
C.T. 8
C.T. 22–26
C.T. 36–41
C.T. 42.95
C.T. 43
C.T. 60–62
C.T. 66.02
C.T. 78.04
C.T. 80
C.T. 81.01–81.02
C.T. 82.01–82.02
C.T. 83.01–83.02
C.T. 84–85
C.T. 86.01–86.02
C.T. 87.01–87.02
C.T. 88

DENTAL: Georgia
Population Group Listing

Population Group

Low Inc—Colquitt
County—Colquitt
Parts:
Low Income
Low Inc—Dade
County—Dade
Parts:
Low Income
Low Inc—Dawson Co
County—Dawson
Parts:
Low Income
Low Inc—Dougherty
County—Dougherty
Parts:
Low Income
Low Inc—Greene
County—Greene
Parts:
Low Income
Low Inc—Hancock
County—Hancock
Parts:
Low Income
Low Inc—Haralson
County—Haralson
Parts:
Low Income
Low Inc—Lamar
County—Lamar
Parts:
Low Income
Low Inc—Lincoln
County—Lincoln
Parts:
Low Income
Low Inc—Murray Co
County—Murray
Parts:
Low Income
Low Inc—Pike
County—Pike
Parts:
Low Income
Low Inc—Sumter
County—Sumter
Parts:
Low Income
Low Inc—Union Co
County—Union
Parts:
Low Income
Low Inc—Ware Co
County—Ware
Parts:
Low Income
Low Inc—Whitfield
County—Whitfield
Parts:
Low Income
Low Inc—Wilkinson Co
County—Wilkinson
Parts:
Low Income
Low Inc—Worth
County—Worth
Parts:
Low Income

DENTAL: Georgia
Facility Listing

Facility Name

Calhoun State Prison
County—Calhoun
Costal State Prison
County—Chatham
Dodge State Prison
County—Dodge
Douglas Health Center
County—Fulton
FCI—Jesup
County—Wayne
Ga Diagnostic Prison
County—Butts
Good Samaritan Hlth Ctr
County—Fulton
Hancock State Prison
County—Hancock
Marietta Health Center
County—De Kalb
Metro Corr Inst
County—Fulton
Metro State Prison
County—De Kalb
Middle Ga Corr Complex
County—Bibb
Phillips State Prison
County—Forsyth
Procare At Midtown, Inc.
County—Fulton
Smyrna Health Center
County—Fulton
USP Atlanta
County—Fulton
Wilcox State Prison
County—Wilcox

DENTAL: Hawaii
County Listing

County Name

*Hawaii
Population Group: Low Inc—Hawaii
Honolulu
Population Group: Low Inc—Kalihi–Polama
*Maui
Service Area: Hana/Haiku

DENTAL: Hawaii
Service Area Listing

Service Area Name

Hana/Haiku
County—Maui
Parts:
C.T. 301–302

DENTAL: Hawaii
Population Group Listing

Population Group

Low Inc—Hawaii 1
County—Hawaii
Parts:
Low Income
Low Inc—Kalihi-Polama
County—Honolulu
Parts:
C.T. 51–57
C.T. 57.99–58.00
C.T. 59–61
C.T. 62.01–62.02
C.T. 63.01–63.02
C.T. 64.01–64.02
C.T. 65–66

DENTAL: Idaho
County Listing

County Name

Ada
Population Group: Low Inc—Urban Boise City
*Adams
*Bannock
Population Group: Low Inc/MFW—Bannock C0
*Benewah
Population Group: Low Inc—Benewah Co
*Bingham
Population Group: Low Inc/MFW—Bingham Co
*Boise
Population Group: Low Inc—Boise Co
*Bonner
Population Group: Low Inc/MFW—Bonner Co
*Boundary
Population Group: Low Inc—Boundary Co
*Butte
Population Group: Low Inc/MFW—Butte Co
*Camas
Canyon
Population Group: Low Inc/MFW—S Treasure Valley
*Caribou
Population Group: Low Inc/MFW—Caribou Co
*Clark
*Elmore
Population Group: Low Inc/MFW—Elmore Co
*Fremont
Population Group: Low-Inc/MFW—Fremont Co
*Gem
Population Group: Low Inc/MFW—N Treasure Valley
*Gooding
Population Group: Low -Inc/MFW—Gooding Co
*Idaho
*Jerome
Population Group: Low Inc/MFW—Jerome Co
*Kootenai
Population Group: Low Inc—Kootenai
*Lemhi
Population Group: Low Inc—Lemhi Co
*Lincoln
*Nez Perce
Population Group: Nez Perce Co—Low Inc/MFW
*Oneida
Population Group: Low Inc—Oneida Co
*Owyhee
Service Area: Bruneau
Population Group: Low Inc/MFW—S Treasure Valley
*Payette
Population Group: Low Inc/MFW—N Treasure Valley
*Power
Population Group: Low Inc/MFW—Power Co
*Shoshone
Population Group: Low Inc—Shoshone Co
*Teton
Population Group: Low Inc/MFW—Teton Co
*Twin Falls

DENTAL: Idaho
County Listing

County Name

Population Group: Low Inc/MFW—Twin Falls Co
*Valley
Population Group: Low Inc—Valley Co
*Washington
Population Group: Low Inc/MFW—N Treasure Valley

DENTAL: Idaho
Service Area Listing

Service Area Name

Bruneau
County—Owyhee
Parts:
Bruneau Division
Grand View Division
Murphy Division
Western Shoshone Division

DENTAL: Idaho
Population Group Listing

Population Group

Low -Inc/MFW—Gooding Co
County—Gooding
Parts:
Low—Inc/MFW—Gooding
Low Inc—Benewah Co
County—Benewah
Parts:
Low Income
Low Inc—Boise Co
County—Boise
Low Inc—Boundary Co
County—Boundary
Parts:
Low Inc
Low Inc—Kootenai
County—Kootenai
Parts:
Kootenai Co
Low Inc—Lemhi Co
County—Lemhi
Parts:
Lemhi Co
Low Inc—Oneida Co
County—Oneida
Parts:
Oneida Co
Low Inc—Shoshone Co
County—Shoshone
Parts:
Shoshone
Low Inc—Urban Boise City
County—Ada
Parts:
C.T. 1
C.T. 4–6
C.T. 9–11
C.T. 12.01–12.02
C.T. 14–21
C.T. 23.02
C.T. 23.10–23.11
Low Inc—Valley Co
County—Valley
Low Inc/MFW—Bannock C0
County—Bannock
Parts:
Low Income
Low Inc/MFW—Bingham Co
County—Bingham

DENTAL: Idaho
Population Group Listing

Population Group

Parts:
Low Income
Low Inc/MFW—Bonner Co
County—Bonner
Parts:
Low Inc/MFW
Low Inc/MFW—Butte Co
County—Butte
Parts:
Low Inc/MFW
Low Inc/MFW—Caribou Co
County—Caribou
Parts:
Low Inc/MFW
Low Inc/MFW—Elmore Co
County—Elmore
Low Inc/MFW—Jerome Co
County—Jerome
Parts:
Jerome Co
Low Inc/MFW—N Treasure Valley
County—Gem
Parts:
Low Income/MFW-Gem Co
County—Payette
Parts:
Low Income/MFW-Payette
County—Washington
Parts:
Low Income/MFW-Washingto
Low Inc/MFW—Power Co
County—Power
Parts:
Power Co
Low Inc/MFW—S Treasure Valley
County—Canyon
Parts:
Low Income
MFW
County—Owyhee
Parts:
Homedale CCD
Marsing CCD
Low Inc/MFW—Teton Co
County—Teton
Parts:
Teton Co
Low Inc/MFW—Twin Falls Co
County—Twin Falls
Parts:
Low Inc/MFW
Low-Inc/MFW—Fremont Co
County—Fremont
Parts:
Low Inc/MFW—Fremont
Nez Perce Co—Low Inc/MFW
County—Nez Perce
Parts:
Low Inc/MFW

DENTAL: Illinois
County Listing

County Name

*Adams
Population Group: Low Inc—Adams Co
*Alexander
Population Group: Medicaid Elig—Alexander Co
*Bond
Population Group: Medicaid Elig—Bond Co
Facility: FCI Greenville

DENTAL: Illinois
County Listing

County Name

*Bureau
Population Group: Low Inc—Bureau Co
*Carroll
Population Group: Medicaid Elig—Carroll Co
*Cass
Population Group: Medicaid Elig—Cass Co
Champaign
Population Group: Low Inc—Campaign Co
*Christian
Population Group: Medicaid Elig—Christian Co
Cook
Service Area: Riverdale (Chicago)
Population Group: Homeless—Chicago
Population Group: Low Inc—Chicago Heights
Population Group: Medicaid Elig—Near North (Chicago)
Population Group: Medicaid Elig—Northern Chicago
Population Group: Medicaid Elig—Midsouth Area (Chicago)
Population Group: Medicaid Elig—Near South (Chicago)
Population Group: Medicaid Elig—West Side (Chicago)
Population Group: Medicaid Elig—Midway Central (Chicago)
Population Group: Medicaid Elig—Midway East (Chicago)
Population Group: Medicaid Elig—Southeast South (Chicago
Population Group: Medicaid Elig—Southeast North (Chicago
Population Group: Medicaid Elig—Southwest East (Chicago)
Facility: Cook Co Dept Of Corr Comp
*Crawford
Population Group: Medicaid Elig—Crawford Co
*Cumberland
Population Group: Medicaid Elig—Cumberland Co
*De Witt
Population Group: Mediciad Elig—Dewitt Co
*Douglas
Population Group: Low Inc—Douglas Co
*Edgar
Population Group: Medicaid—Edgar
*Edwards
Population Group: Medicaid Elig—Edwards Co
*Fayette
Population Group: Medicaid—Fayette Co
*Ford
Population Group: Medicaid Elig—Ford Co
*Franklin
Population Group: Medicaid Elig—Franklin Co
*Gallatin
*Hamilton
Population Group: Medicaid Elig—Hamilton Co
*Hardin Co
*Henderson
Population Group: Low Inc—Henderson Co
*Jackson
Population Group: Medicaid Eligible—Jackson Co
*Jefferson
Population Group: Medicaid Elig—Jefferson Co
*Johnson
Population Group: Medicaid Elig—Johnson Co
Kankakee
Population Group: Medicaid Elig—Kankakee Co
*La Salle
Population Group: Medicaid Elig—LA Salle Co
*Lawrence
Population Group: Medicaid Elig—Lawrence Co
*Lee
Population Group: Medicaid Elig—Lee Co
*Livingston
Population Group: Medicaid Elig—Livingston Co
*Logan
Population Group: Medicaid Elig—Logan Co
Macon
Population Group: Medicaid Elig—Macon Co
*Macoupin
Population Group: Low Inc—Macoupin Co
Madison
Population Group: Medicaid Elig—Madison Co
*Marion
Population Group: Medicaid Elig—Marion Co
*Mason
Population Group: Medicaid Elig—Mason Co
*Massac
Population Group: Medicaid Elig—Massac Co
Menard
Population Group: Medicaid Elig—Menard Co
*Mercer
Population Group: Medicaid Elig—Mercer Co
*Montgomery
Population Group: Low Inc—Montgomery Co
*Moultrie
Population Group: Medicaid Elig—Moultrie Co
*Perry
Population Group: Medicaid Elig—Perry Co
*Pope
Population Group: Medicaid Eligible—Pope Co
*Pulaski
Population Group: Medicaid Elig—Pulaski Co
*Randolph
Population Group: Medicaid Elig—Randolph Co
*Saline
Population Group: Low Inc—Saline Co
Sangamon
Population Group: Low Inc—East Side Springfield
*Shelby
Population Group: Medicaid Elig—Shelby Co
St Clair
Population Group: Medicaid Eligible—St Clair Co
Tazewell
Facility: Pekin Corr Inst
*Union
Population Group: Medicaid Elig—Union Co
*Wabash
Population Group: Medicaid Elig—Wabash Co
*Washington
Population Group: Medicaid Elig—Washington Co
*Wayne
Population Group: Medicaid Elig—Wayne Co
*White
Population Group: Low Inc—White Co
*Whiteside
Population Group: Low Inc—Whiteside Co
*Williamson
Population Group: Medicaid Elig—Williamson Co
Facility: USP Marion
Winnebago
Population Group: Low Inc—SW Rockford
Facility: Milestone Dental Clinic

DENTAL: Illinois
Service Area Listing

Service Area Name

Riverdale (Chicago)
County—Cook
Parts:
C.T. 5401

DENTAL: Illinois
Population Group Listing

Population Group

Homeless—Chicago
County—Cook
Parts:
Comm. Area 77 (Edgewater
Comm. Area 32 (Loop)
Comm. Area 28 (Near West
Comm. Area 24 (West Town
Comm. Area 22 (Logan Squ
Comm. Area 8 (Near Nort
Comm. Area 7 (Lincoln P
Comm. Area 6 (Lakeview)
Comm. Area 5 (North Cen
Comm. Area 4 (Lincoln S
Comm. Area 3 (Uptown)
Low Inc—Adams Co
County—Adams
Parts:
Low Income
Low Inc—Bureau Co
County—Bureau
Parts:
Low Income
Low Inc—Campaign Co
County—Champaign
Parts:
Low Income
Low Inc—Chicago Heights
County—Cook
Parts:
C.T. 82.89–82.94
C.T. 82.97

DENTAL: Illinois
Population Group Listing

Population Group

Low Inc—Douglas Co
County—Douglas
Parts:
Low Income
Low Inc—East Side Springfield
County—Sangamon
Parts:
C.T. 8
C.T. 15–17
C.T. 23–24
Low Inc—Henderson Co
County—Henderson
Parts:
Low Income
Low Inc—Macoupin Co
County—Macoupin
Parts:
Low Income
Low Inc—Montgomery Co
County—Montgomery
Parts:
Low Income
Low Inc—Saline Co
County—Saline
Parts:
Low Income
Low Inc—SW Rockford
County—Winnebago
Parts:
C.T. 8
C.T. 10–13
C.T. 18–22
C.T. 23.01–23.02
C.T. 24–29
C.T. 31–32
Low Inc—White Co
County—White
Parts:
Low Income
Low Inc—Whiteside Co
County—Whiteside
Parts:
Low Income
Medicaid—Edgar
County—Edgar
Parts:
Medicaid Eligible
Medicaid—Fayette Co
County—Fayette
Parts:
Medicaid Eligible
Medicaid Elig—Alexander Co
County—Alexander
Parts:
Medicaid Eligible
Medicaid Elig—Bond Co
County—Bond
Parts:
Medicaid Eligible
Medicaid Elig—Carroll Co
County—Carroll
Parts:
Medicaid Eligible
Medicaid Elig—Cass Co
County—Cass
Parts:
Medicaid Eligible
Medicaid Elig—Christian Co
County—Christian
Parts:
Medicaid Eligible
Medicaid Elig—Crawford Co

DENTAL: Illinois
Population Group Listing

Population Group

County—Crawford
Parts:
Medicaid Eligible
Medicaid Elig—Cumberland Co
County—Cumberland
Parts:
Medicaid Eligible
Medicaid Elig—Edwards Co
County—Edwards
Parts:
Medicaid Eligible
Medicaid Elig—Ford Co
County—Ford
Parts:
Medicaid Eligible
Medicaid Elig—Franklin Co
County—Franklin
Parts:
Medicaid Eligible
Medicaid Elig—Hamilton Co
County—Hamilton
Parts:
Medicaid Elig Pop
Medicaid Elig—Jefferson Co
County—Jefferson
Parts:
Medicaid Eligible
Medicaid Elig—Johnson Co
County—Johnson
Parts:
Medicaid Eligible
Medicaid Elig—Kankakee Co
County—Kankakee
Parts:
Medicaid Eligible
Medicaid Elig—Lawrence Co
County—Lawrence
Parts:
Medicaid Eligible
Medicaid Elig—Lee Co
County—Lee
Parts:
Medicaid Eligible
Medicaid Elig—Livingston Co
County—Livingston
Parts:
Medicaid Eligible
Medicaid Elig—Logan Co
County—Logan
Parts:
Medicaid Eligible
Medicaid Elig—LA Salle Co
County—La Salle
Parts:
Medicaid Eligible
Medicaid Elig—Macon Co
County—Macon
Parts:
Medicaid Eligible
Medicaid Elig—Madison Co
County—Madison
Parts:
Medicaid Eligible
Medicaid Elig—Marion Co
County—Marion
Parts:
Medicaid Eligible
Medicaid Elig—Mason Co
County—Mason
Parts:
Medicaid Eligible
Medicaid Elig—Massac Co

DENTAL: Illinois
Population Group Listing

Population Group

County—Massac
Parts:
Medicaid Eligible
Medicaid Elig—Menard Co
County—Menard
Parts:
Medicaid Eligible
Medicaid Elig—Mercer Co
County—Mercer
Parts:
Medicaid Eligible
Medicaid Elig—Midsouth Area (Chicago)
County—Cook
Parts:
C.T. 3001–3020
C.T. 3101–3115
C.T. 5701–5705
C.T. 5801–5811
C.T. 5901–5907
C.T. 6001–6016
C.T. 6101–6122
Medicaid Elig—Midway Central (Chicago)
County—Cook
Parts:
C.T. 6301–6309
C.T. 6601–6611
Medicaid Elig—Midway East (Chicago)
County—Cook
Parts:
C.T. 6701–6720
C.T. 6801–6814
C.T. 7101–7115
Medicaid Elig—Moultrie Co
County—Moultrie
Parts:
Medicaid Elig
Medicaid Elig—Near North (Chicago)
County—Cook
Parts:
C.T. 701–720
C.T. 801–807
C.T. 809–819
C.T. 2001–2006
C.T. 2101–2109
C.T. 2201–2229
C.T. 2301–2318
C.T. 2401–2436
Medicaid Elig—Near South (Chicago)
County—Cook
Parts:
C.T. 3201–3206
C.T. 3301–3305
C.T. 3401–3406
C.T. 3501–3515
C.T. 3601–3605
C.T. 3701–3704
C.T. 3801–3806
C.T. 3806–3820
C.T. 3901–3907
C.T. 4001–4008
Medicaid Elig—Northern Chicago
County—Cook
Parts:
C.T. 101–109
C.T. 201–209
C.T. 301–321
C.T. 401–410
C.T. 501–515
C.T. 601–634
C.T. 1101–1105
C.T. 1301–1305
C.T. 1401–1408

DENTAL: Illinois
Population Group Listing

Population Group

C.T. 1501–1512
C.T. 1601–1607
C.T. 1607–1613
C.T. 1701–1711
C.T. 1801–1803
C.T. 1901–1914
Medicaid Elig—Perry Co
County—Perry
Parts:
Medicaid Elig
Medicaid Elig—Pulaski Co
County—Pulaski
Parts:
Medicaid Eligible
Medicaid Elig—Randolph Co
County—Randolph
Parts:
Medicaid Eligible
Medicaid Elig—Shelby Co
County—Shelby
Parts:
Medicaid Eligible
Medicaid Elig—Southeast South (Chicago
County—Cook
Parts:
C.T. 4401–4409
C.T. 4501–4503
C.T. 4701
C.T. 4801–4805
C.T. 5101–5105
C.T. 5201–5206
C.T. 5501–5502
Medicaid Elig—Southeast North (Chicago
County—Cook
Parts:
C.T. 4101–4114
C.T. 4201–4212
C.T. 4301–4314
C.T. 4601–4610
C.T. 6901–6915
Medicaid Elig—Southwest East (Chicago)
County—Cook
Parts:
C.T. 4901–4914
C.T. 5001–5003
C.T. 5301–5306
C.T. 5401
Medicaid Elig—Union Co
County—Union
Parts:
Medicaid Eligible
Medicaid Elig—Wabash Co
County—Wabash
Parts:
Medicaid Eligible
Medicaid Elig—Washington Co
County—Washington
Parts:
Medicaid Elig Pop
Medicaid Elig—Wayne Co
County—Wayne
Parts:
Medicaid Elig. Pop
Medicaid Elig—West Side (Chicago)
County—Cook
Parts:
C.T. 2501–2524
C.T. 2601–2610
C.T. 2701–2719
C.T. 2801–2843
C.T. 2901–2927
Medicaid Elig—Williamson Co

DENTAL: Illinois
Population Group Listing

Population Group

County—Williamson
Parts:
Medicaid Elig Pop
Medicaid Eligible—Jackson Co
County—Jackson
Parts:
Medicaid Eligible
Medicaid Eligible—Pope Co
County—Pope
Parts:
Medicaid Eligible
Medicaid Eligible—St Clair Co
County—St Clair
Parts:
Medicaid Eligible
Mediciad Elig—Dewitt Co
County—De Witt
Parts:
Medicaid Eligible

DENTAL: Illinois
Facility Listing

Facility Name

Cook Co Dept Of Corr Comp
County—Cook
FCI Greenville
County—Bond
Milestone Dental Clinic
County—Winnebago
Pekin Corr Inst
County—Tazewell
USP Marion
County—Williamson

DENTAL: Indiana
County Listing

County Name

Allen
Population Group: Low Inc—Central Ft Wayne City
Elkhart
Population Group: Low Inc—NW Elkhart Co
*La Porte
Population Group: Low Inc—LA Porte Co
Marion
Service Area: Highland-Brookside (Indianapolis)
Service Area: Near North Side (Indianapolis)
Service Area: South Central Indianapolis
St Joseph
Population Group: Low Inc—South Bend
Tippecanoe
Population Group: Low Inc—Lafayette City
Vigo
Facility: Terre Haute Corr Inst

DENTAL: Indiana
Service Area Listing

Service Area Name

Highland-Brookside (Indianapolis)
County—Marion
Parts:
C.T. 3526–3527
C.T. 3544–3545
C.T. 3547–3551
Near North Side (Indianapolis)
County—Marion

DENTAL: Indiana
Service Area Listing

Service Area Name

Parts:
C.T. 3517
C.T. 3519
C.T. 3521
C.T. 3528
C.T. 3531–3532
South Central Indianapolis
County—Marion
Parts:
C.T. 3556–3557
C.T. 3559
C.T. 3562
C.T. 3569–3572
C.T. 3578–3580

DENTAL: Indiana
Population Group Listing

Population Group

Low Inc—Central Ft Wayne City 1
County—Allen
Parts:
C.T. 6
C.T. 9–27
C.T. 28.97–28.98
C.T. 29–30
Low Inc—Lafayette City
County—Tippecanoe
Parts:
C.T. 4
C.T. 6
C.T. 53–55
C.T. 103–105
Low Inc—LA Porte Co
County—La Porte
Parts:
Low Income
Low Inc—NW Elkhart Co
County—Elkhart
Parts:
C.T. 16–17
C.T. 18.97
C.T. 21
C.T. 22.97–22.98
C.T. 23–28
Low Inc—South Bend
County—St Joseph
Parts:
C.T. 1–2
C.T. 4–7
C.T. 9–10
C.T. 17–24
C.T. 27–30
C.T. 33–35

DENTAL: Indiana
Facility Listing

Facility Name

Terre Haute Corr Inst 1
County—Vigo

DENTAL: Iowa
County Listing

County Name

*Adair
Population Group: Low Inc—Adair Co
*Adams
Population Group: Low Inc—Adams Co
*Allamakee
Population Group: Low Inc—Allamakee Co

DENTAL: Iowa
County Listing

County Name

*Appanoose
Population Group: Low Inc—Appanoose Co
*Benton
Population Group: Low Inc—Benton Co
*Boone
Population Group: Low Income—Boone County
*Buchanan
Population Group: Low Income—Buchanan Co
*Buena Vista
Population Group: Low Income—Buena Vista Co
*Butler
Population Group: Low Inc—Butler Co
*Calhoun
Population Group: Low Inc—Calhoun Co
*Cass
Population Group: Low Income—Cass Co
*Cedar
Population Group: Low Inc—Cedar Co
*Cherokee
Population Group: Low Income—Cherokee Co
*Clarke
Population Group: Low Inc—Clarke Co
*Clay
Population Group: Low Inc—Clay Co
*Clayton
Population Group: Low Income—Clayton Co
*Clinton
Population Group: Low Income—Clinton Co
*Crawford
Population Group: Low Inc—Crawford Co
*Davis
Population Group: Low Income—Davis Co
*Decatur
Population Group: Low Inc—Decatur Co
*Delaware
Population Group: Low Income—Delaware Co
*Des Moines
Population Group: Low Income—Des Moines Co
*Emmet
Population Group: Low Income—Emmett Co
*Fayette
Population Group: Low Income—Fayette Co
*Franklin
Population Group: Low Inc—Franklin Co
*Greene
Population Group: Low Inc—Greene Co
*Guthrie
*Hamilton
Population Group: Low Income—Hamilton Co
*Hardin
Population Group: Low Income—Hardin Co
*Harrison
Population Group: Low Income—Harrison Co
*Henry
Population Group: Low Income—Henry Co
*Howard
Population Group: Low Inc—Howard Co
*Humboldt

DENTAL: Iowa
County Listing

County Name

Population Group: Low Income—Humboldt Co
*Ida
Population Group: Low Income—Ida Co
*Jackson
Population Group: Low Income—Jackson Co
*Jefferson
Population Group: Low Income—Jefferson Co
*Jones
Population Group: Low Income—Jones Co
*Keokuk
Population Group: Low Income—Keokuk Co
*Kossuth
Population Group: Low Income—Kossuth Co
*Lee
Population Group: Low Income—Lee Co
*Louisa
Population Group: Low Inc—Louisa Co
*Lyon
Population Group: Low Income—Lyon Co
*Madison
Population Group: Low Income—Madison Co
*Mahaska
Population Group: Low Income—Mahaska Co
*Mills
Population Group: Low Income—Mills Co
*Monona
Population Group: Low Income—Monona Co
*Montgomery
Population Group: Low Income—Montgomery Co
*O Brien
Population Group: Low Income—O Brien Co
*Osceola
Population Group: Low Income—Osceola Co
*Page
Population Group: Low Income—Page Co
*Palo Alto
Population Group: Low Income—Palo Alto Co
*Plymouth
Population Group: Low Income—Plymouth Co
*Pocahontas
Population Group: Low Income—Pocahontas Co
Polk
Population Group: Low Inc—City Of Des Moines
Pottawattamie
Population Group: Low Inc—Pottawattamie Co
*Poweshiek
Population Group: Low Income—Poweshiek Co
*Ringgold
Population Group: Low Income—Ringgold Co
*Sac
Population Group: Low Inc—Sac Co
Scott
Population Group: Low Income—Scott Co
*Shelby

DENTAL: Iowa
County Listing

County Name

Population Group: Low Inc—Shelby Co
*Sioux
Population Group: Low Income—Sioux Co
*Tama
Population Group: Low Income—Tama Co
*Taylor
Population Group: Low Income—Taylor Co
*Union
Population Group: Low Income—Union Co
*Van Buren
Population Group: Low Income—Van Buren Co
*Wapello
Population Group: Low Income—Wapello Co
*Washington
Population Group: Low Inc—Washington Co
*Webster
Population Group: Low Income—Webster Co
*Winnebago
Population Group: Low Income—Winnebago Co
*Winneshiek
Population Group: Low Income—Winneshiek Co
Woodbury
Population Group: Low Income—Woodbury Co
*Worth
Population Group: Low Income—Worth Co
*Wright
Population Group: Low Income—Wright Co

DENTAL: Iowa
Population Group Listing

Population Group

Low Inc—Adair Co
County—Adair
Parts:
Low Income
Low Inc—Adams Co
County—Adams
Parts:
Low Income
Low Inc—Allamakee Co
County—Allamakee
Parts:
Low Income
Low Inc—Appanoose Co
County—Appanoose
Parts:
Low Income
Low Inc—Benton Co
County—Benton
Parts:
Low Income
Low Inc—Butler Co
County—Butler
Parts:
Low Income
Low Inc—Calhoun Co
County—Calhoun
Parts:
Low Income
Low Inc—Cedar Co
County—Cedar
Parts:
Low Income
Low Inc—City Of Des Moines

DENTAL: Iowa
Population Group Listing

Population Group

County—Polk
Parts:
C.T. 11–12
C.T. 17–18
C.T. 21
C.T. 26–27
C.T. 42
C.T. 44
C.T. 48–53
Low Inc—Clarke Co
County—Clarke
Parts:
Low Income
Low Inc—Clay Co
County—Clay
Parts:
Low Income
Low Inc—Crawford Co
County—Crawford
Parts:
Low Income
Low Inc—Decatur Co
County—Decatur
Parts:
Low Income
Low Inc—Franklin Co
County—Franklin
Parts:
Low Income
Low Inc—Greene Co
County—Greene
Parts:
Low Income
Low Inc—Howard Co
County—Howard
Parts:
Low Income
Low Inc—Louisa Co
County—Louisa
Parts:
Low Income
Low Inc—Pottawattamie Co
County—Pottawattamie
Parts:
Low Income
Low Inc—Sac Co
County—Sac
Parts:
Low Income
Low Inc—Shelby Co
County—Shelby
Parts:
Low Income
Low Inc—Washington Co
County—Washington
Parts:
Low Income
Low Income —Winneshiek Co
County—Winneshiek
Parts:
Low Income
Low Income—Poweshiek Co
County—Poweshiek
Parts:
Low Income
Low Income—Boone County
County—Boone
Parts:
Low Income
Low Income—Buchanan Co
County—Buchanan
Parts:

DENTAL: Iowa
Population Group Listing

Population Group

Low Income
Low Income—Buena Vista Co
County—Buena Vista
Parts:
Low Income
Low Income—Cass Co
County—Cass
Parts:
Low Income
Low Income—Cherokee Co
County—Cherokee
Parts:
Low Income
Low Income—Clayton Co
County—Clayton
Parts:
Low Income
Low Income—Clinton Co
County—Clinton
Parts:
Low Income
Low Income—Davis Co
County—Davis
Parts:
Low Income
Low Income—Delaware Co
County—Delaware
Parts:
Low Income
Low Income—Des Moines Co
County—Des Moines
Parts:
Low Income
Low Income—Emmett Co
County—Emmet
Parts:
Low Income
Low Income—Fayette Co
County—Fayette
Parts:
Low Income
Low Income—Hamilton Co
County—Hamilton
Parts:
Low Income
Low Income—Hardin Co
County—Hardin
Parts:
Low Income
Low Income—Harrison Co
County—Harrison
Parts:
Low Income
Low Income—Henry Co
County—Henry
Parts:
Low Income
Low Income—Humboldt Co
County—Humboldt
Parts:
Low Income
Low Income—Ida Co
County—Ida
Parts:
Low Income
Low Income—Jackson Co
County—Jackson
Parts:
Low Income
Low Income—Jefferson Co
County—Jefferson
Parts:

DENTAL: Iowa
Population Group Listing

Population Group

Low Income
Low Income—Jones Co
County—Jones
Parts:
Low Income
Low Income—Keokuk Co
County—Keokuk
Parts:
Low Income
Low Income—Kossuth Co
County—Kossuth
Parts:
Low Income
Low Income—Lee Co
County—Lee
Parts:
Low Income
Low Income—Lyon Co
County—Lyon
Parts:
Low Income
Low Income—Madison Co
County—Madison
Parts:
Low Income
Low Income—Mahaska Co
County—Mahaska
Parts:
Low Income
Low Income—Mills Co
County—Mills
Parts:
Low Income
Low Income—Monona Co
County—Monona
Parts:
Low Income
Low Income—Montgomery Co
County—Montgomery
Parts:
Low Income
Low Income—O Brien Co
County—O Brien
Parts:
Low Income
Low Income—Osceola Co
County—Osceola
Parts:
Low Income
Low Income—Page Co
County—Page
Parts:
Low Income
Low Income—Palo Alto Co
County—Palo Alto
Parts:
Low Income
Low Income—Plymouth Co
County—Plymouth
Parts:
Low Income
Low Income—Pocahontas Co
County—Pocahontas
Parts:
Low Income
Low Income—Ringgold Co
County—Ringgold
Parts:
Low Income
Low Income—Scott Co
County—Scott
Parts:

DENTAL: Iowa
Population Group Listing

Population Group

Low Income
Low Income—Sioux Co
County—Sioux
Parts:
Low Income
Low Income—Tama Co
County—Tama
Parts:
Low Income
Low Income—Taylor Co
County—Taylor
Parts:
Low Income
Low Income—Union Co
County—Union
Parts:
Low Income
Low Income—Van Buren Co
County—Van Buren
Parts:
Low Income
Low Income—Wapello Co
County—Wapello
Parts:
Low Income
Low Income—Webster Co
County—Webster
Parts:
Low Income
Low Income—Winnebago Co
County—Winnebago
Parts:
Low Income
Low Income—Woodbury Co
County—Woodbury
Parts:
Low Income
Low Income—Worth Co
County—Worth
Parts:
Low Income
Low Income—Wright Co
County—Wright
Parts:
Low Income

DENTAL: Kansas
County Listing

County Name

*Comanche
*Crawford
Population Group: Low Income—Crawford Co
Douglas
Population Group: Low Inc—Douglas Co
*Elk
*Ellis
Population Group: Low Inc—Ellis Co
*Finney
Population Group: Low Inc—Finney Co
*Gove
*Haskell
*Hodgeman
*Kiowa
*Lane
Leavenworth
Facility: USP Leavenworth
*Lyon
Population Group: Low Inc—Emporia City
*Ness
*Rawlins

DENTAL: Kansas
County Listing

County Name

*Saline
Population Group: Low Inc—Saline Co
*Scott
Shawnee
Population Group: Low Inc—City Of Topeka
*Trego
*Wabaunsee
*Wallace
*Wichita
*Wilson

DENTAL: Kansas
Population Group Listing

Population Group

Low Inc—City Of Topeka
County—Shawnee
Parts:
Topeka City
Low Inc—Douglas Co
County—Douglas
Parts:
Low Income
Low Inc—Ellis Co
County—Ellis
Parts:
Low Income
Low Inc—Emporia City
County—Lyon
Parts:
Low-Income
Low Inc—Finney Co
County—Finney
Parts:
Low Income
Low Inc—Saline Co
County—Saline
Parts:
Low Income
Low Income—Crawford Co
County—Crawford
Parts:
Low Income

DENTAL: Kansas
Facility Listing

Facility Name

USP Leavenworth
County—Leavenworth

DENTAL: Kentucky
County Listing

County Name

*Clay
Facility: FCI Manchester
*Edmonson
*Harlan
Population Group: Low Inc—Harlan
*Hart
*Jackson
Jefferson
Population Group: Low Inc—Jefferson
*Larue
*Laurel
*Lee
Population Group: Low Income—Lee Co
*McCreary
*Meade
*Owsley

DENTAL: Kentucky
County Listing

County Name

*Todd
*Wolfe

DENTAL: Kentucky
Population Group Listing

Population Group

Low Inc—Harlan
County—Harlan
Parts:
Low Income
Low Inc—Jefferson
County—Jefferson
Parts:
Low Income
Low Income—Lee Co
County—Lee
Parts:
Low Income

DENTAL: Kentucky
Facility Listing

Facility Name

FCI Manchester
County—Clay

DENTAL: Louisiana
Parish Listing

Parish Name

*Allen
Facility: FCI Oakdale
Caddo
Service Area: Martin Luther King Drive
Service Area: Vivian/Gilliam
*Caldwell
*Catahoula
*De Soto
East Baton Rouge
Service Area: Eden Park/South Baton Rouge
*Natchitoches
Orleans
Population Group: Downtown New Orleans Homless Pop
*Red River
St Landry
*St Mary
*Tangipahoa
*Tensas
*Union
*Vernon
*West Carroll
*Winn

DENTAL: Louisiana
Service Area Listing

Service Area Name

Eden Park/South Baton Rouge
Parish—East Baton Rouge
Parts:
C.T. 8–10
C.T. 12–16
C.T. 21–22
C.T. 24–25
Martin Luther King Drive
Parish—Caddo
Parts:
C.T. 246
Vivian/Gilliam

DENTAL: Louisiana
Service Area Listing

Service Area Name

Parish—Caddo
Parts:
C.T. 248–250
C.T. 251.98

DENTAL: Louisiana
Population Group Listing

Population Group

Downtown New Orleans Homless Pop
Parish—Orleans
Parts:
C.T. 57–59
C.T. 67–68

DENTAL: Louisiana
Facility Listing

Facility Name

FCI Oakdale 1
Parish—Allen

DENTAL: Maine
County Listing

County Name

Androscoggin
Service Area: Jay-Livermore
*Aroostook
Service Area: Allagash
Service Area: Danforth
Service Area: Fort Kent
Population Group: Low Income—Presque Isle
Cumberland
Population Group: Low Inc—Portland
*Franklin
Service Area: Jay-Livermore
Service Area: Rangeley/Kingsfield
Population Group: Low Inc—Farmington Dcaa
*Hancock
Population Group: Low Inc—Bucksport
Population Group: Low Inc—Gouldsboro
Population Group: Low Inc—Ellsworth
*Kennebec
Service Area: Jay-Livermore
Population Group: Low Inc—Waterville Dcaa
Population Group: Low Inc—Farmington Dcaa
Facility: Augusta Mental Health Institute
*Knox
Service Area: Penobscot Bay
*Oxford
Service Area: Jay-Livermore
Service Area: Rangeley/Kingsfield
Penobscot
Service Area: Danforth
Population Group: Penobscot Ind Reserv (S)
Facility: Bangor Mental Health Institute
*Piscataquis
Service Area: Bingham Dcaa
Population Group: Low Inc—Skowhegan Dcaa
*Somerset
Service Area: Bingham Dcaa
Service Area: Jackman Dcaa
Service Area: Rangeley/Kingsfield
Population Group: Low Inc—Skowhegan Dcaa

DENTAL: Maine
County Listing

County Name

Population Group: Low Inc—Waterville Dcaa
Waldo
Population Group: Low Inc—Waterville Dcaa
Population Group: Low Inc—Bucksport
Population Group: Low Inc—Belfast Dcaa
*Washington
Service Area: Danforth
Service Area: Eastport/Lubec
Population Group: Low Inc—Calais Dcaa
Population Group: Low Inc—Gouldsboro
Population Group: Low-Income Machias/Jonesport (Dcaa #37)

DENTAL: Maine
Service Area Listing

Service Area Name

Allagash
County—Aroostook
Parts:
Allagash Town
Northwest Aroostook Unorg.
St. Francis Town
St. John Plantation
Bingham Dcaa
County—Piscataquis
Parts:
Kingsbury Plantation
County—Somerset
Parts:
Bingham Town
Caratunk Town
Moscow Town
NW Somerset (S. 1/3)
Pleasant Ridge Plantation
The Forks Plantation
West Forks Plantation
Danforth
County—Aroostook
Parts:
Bancroft Town
Orient Town
Weston Town
County—Penobscot
Parts:
Drew Plantation
Kingman Unorg.
Prentiss Plantation
County—Washington
Parts:
Codyville Plantation
Danforth Town
Grand Lake Stream Plantation
North Washington Unorg.
Passamaquoddy Indian Township Re
Talmadge Town
Topsfield Town
Vanceboro Town
Waite Town
Eastport/Lubec
County—Washington
Parts:
Dennysville Town
East Central Washington Unorg.
Eastport City
Lubec Town
Pembroke Town
Perry Town
Whiting Town
Fort Kent

DENTAL: Maine
Service Area Listing

Service Area Name

County—Aroostook
Parts:
Eagle Lake Town
Fort Kent Town
Frenchville Town
Grand Isle Town
Hamlin Town
Madawaska Town
New Canada Town
Square Lake Unorg.
St. Agatha Town
Van Buren Town
Wallagrass Plantation
Winterville Plantation
Jackman Dcaa
County—Somerset
Parts:
Dennistown Plantation
Jackman Town
Moose River Town
Jay-Livermore
County—Androscoggin
Parts:
Livermore Falls Town
Livermore Town
County—Franklin
Parts:
Jay Town
County—Kennebec
Parts:
Fayette Town
County—Oxford
Parts:
Canton Town
Hartford Town
Sumner Town
Penobscot Bay
County—Knox
Parts:
Matinicus Isle Plantation
North Haven Town
Vinalhaven Town
Rangeley/Kingsfield
County—Franklin
Parts:
Carrabassett Valley Town
Coplin Plantation
Dallas Plantation
Eustis Town
Kingsfield Twn
Madrid Town
North Franklin Unorg.
Phillips Town
Rangeley Town
Rangeley Plantation
Sandy River Plantation
Unorg. Terr.—E.C.Franklin
Wyman Unorg.
County—Oxford
Parts:
Lincoln Plantation
Magalloway Plantation
Unorg. Terr.-N.Oxford
County—Somerset
Parts:
Northwest Somerset Unorg.

DENTAL: Maine
Population Group Listing

Population Group

Low Inc—Belfast Dcaa

DENTAL: Maine
Population Group Listing

Population Group

County—Waldo
Parts:
Belfast City
Belmont Town
Brooks Town
Jackson Town
Knox Town
Liberty Town
Monroe Town
Montville Town
Morrill Town
Northport Town
Searsmont Town
Searsport Town
Stockton Springs Town
Swanville Town
Waldo Town
Low Inc—Bucksport
County—Hancock
Parts:
Bucksport Town
Orland Town
Verona Town
County—Waldo
Parts:
Frankfort Town
Prospect Town
Low Inc—Calais Dcaa
County—Washington
Parts:
Alexander Town
Baileyville Town
Baring Town
Calais City
Charlotte Town
Cooper Town
Crawford Town
Meddybemps Town
Princeton Town
Robbinston Town
Low Inc—Ellsworth
County—Hancock
Parts:
Eastbrook Town
Ellsworth City
Franklin Town
Hancock Town
Lamoine Town
Mariaville Town
Osborn Town
Otis Town
Trenton Town
Waltham Town
Low Inc—Farmington Dcaa
County—Franklin
Parts:
Avon Town
Chesterville Town
Farmington Town
Industry Town
New Sharon Town
New Vineyard Town
So.Franklin Unorganized
Strong Town
Temple Town
Wilton Town
County—Kennebec
Parts:
Vienna Town
Low Inc—Gouldsboro
County—Hancock
Parts:

DENTAL: Maine
Population Group Listing

Population Group

East Hancock Unorg.
Gouldsboro Town
Sorrento Town
Sullivan Town
Winter Harbor Town
County—Washington
Parts:
Beddington Town
Cherryfield Town
Columbia Town
Deblois Town
Harrington Town
Milbridge Town
Steuben Town
Low Inc—Portland
County—Cumberland
Parts:
Low Income
Low Inc—Skowhegan Dcaa
County—Piscataquis
Parts:
Wellington Town
County—Somerset
Parts:
Anson Town
Athens Town
Brighton Plantation Town
Canaan Town
Central Somerset Unorg.
Cornville Town
Embden Town
Harmony Town
Highland Plantation Town
Madison Town
Mercer Town
New Portland Town
Norridgewock Town
Skowhegan Town
Smithfield Town
Solon Town
Starks Town
Low Inc—Waterville Dcaa
County—Kennebec
Parts:
Albion Town
Belgrade Town
Benton Town
China Town
Clinton Town
Oakland Town
Rome Town
Sidney Town
Unity Township
Vassalboro Town
Waterville Town
Winslow Town
County—Somerset
Parts:
Fairfield Town
County—Waldo
Parts:
Burnham Town
Freedom Town
Palermo Town
Thorndike Town
Troy Town
Unity Town
Low Income—Presque Isle
County—Aroostook
Parts:
Ashland Town
Blaine Town

DENTAL: Maine
Population Group Listing

Population Group

Bridgewater Town
Caribou City
Castle Hill Town
Caswell Town
Central Aroostook Unorg.
Chapman Town
Connor Unorg.
Cyr Plantation
East Plantation
Easton Town
Fort Fairfield Town
Garfield Plantation
Limestone Town
Mapleton Town
Mars Hill Town
Masardis Town
Nashville Plantation
New Sweeden Town
Oxbow Plantation
Perham Town
Portage Lake Town
Presque Isle City
Stockholm Town
Wade Town
Washburn Town
Westfield Town
Westmanland Town
Woodland Town
Low-Income Machias/Jonesport (Dcaa #37)
County—Washington
Parts:
Addison Twn
Beals Twn
Centerville Twn
Columbia Falls Twn
Cutler Twn
East Machias Twn
Jonesboro Twn
Jonesport Twn
Machias Twn
Machiasport Twn
Marshfield Twn
Northfield Twn
Roque Bluffs Twn
Wesley Twn
Whitneyville Twn
1/3 Ec Washington Unorg.
Penobscot Ind Reserv (S)
County—Penobscot
Parts:
Old Town City

DENTAL: Maine
Facility Listing

Facility Name

Augusta Mental Health Institute
County—Kennebec
Bangor Mental Health Institute
County—Penobscot

DENTAL: Maryland
County Listing

County Name

Allegany
Population Group: Low Inc—Allegany Co
Facility: FCI Cumberland
Baltimore City
Population Group: Low Inc—South Baltimore
Population Group: Low Inc—N Central Baltimore

DENTAL: Maryland
County Listing

County Name

Population Group: Low Inc—East Baltimore
Population Group: Low Inc—Sandtown Winchester
Facility: Health Care For The Homeless Facility
*Caroline
Population Group: Low Inc—Caroline
Charles
Population Group: Low Inc—Nanjemoy-Marbury
*Garrett
Population Group: Low Inc—Garrett Co
*Somerset
Population Group: Low Inc—Lower Eastern Shore
*Wicomico
Population Group: Low Inc—Lower Eastern Shore
*Worcester
Population Group: Low Inc—Lower Eastern Shore

DENTAL: Maryland
Population Group Listing

Population Group

Low Inc—Allegany Co
County—Allegany
Parts:
Low Income
Low Inc—Caroline
County—Caroline
Parts:
Low Inc Pop Caroline
Low Inc—East Baltimore
County—Baltimore City
Parts:
C.T. 301–302
C.T. 501
C.T. 603–605
C.T. 703–704
C.T. 802
C.T. 803.01–803.02
C.T. 804
C.T. 806–808
C.T. 909
C.T. 1001–1002
C.T. 1004
C.T. 1205
Low Inc—Garrett Co
County—Garrett
Parts:
Low Income
Low Inc—Lower Eastern Shore
County—Somerset
Parts:
Low Income
County—Wicomico
Parts:
Low Income
County—Worcester
Parts:
Low Income
Low Inc—N Central Baltimore
County—Baltimore City
Parts:
C.T. 901–908
C.T. 1201–1204
C.T. 2709.03
C.T. 2710.01–2710.02
C.T. 2711.01–2711.02

DENTAL: Maryland
Population Group Listing

Population Group

Low Inc—Nanjemoy–Marbury
County—Charles
Parts:
District 3, Nanjemoy
District 10, Marbury
Low Inc—Sandtown Winchester
County—Baltimore City
Parts:
C.T. 1401–1403
C.T. 1501–1502
C.T. 1601–1604
C.T. 1607
C.T. 1702–1703
Low Inc—South Baltimore
County—Baltimore City
Parts:
C.T. 2101.01
C.T. 2102.01
C.T. 2301–2303
C.T. 2401
C.T. 2404
C.T. 2502.03–2502.05
C.T. 2502.07
C.T. 2503.02–2503.03
C.T. 2504.01–2504.02
C.T. 2505–2506

DENTAL: Maryland
Facility Listing

Facility Name

FCI Cumberland 1
County—Allegany
Health Care For The Homeless Facility
County—Baltimore City

DENTAL: Massachusetts
County Listing

County Name

Barnstable
Population Group: Low Inc—Mid-Cape
Bristol
Population Group: Low Inc—Fall River
Population Group: Low Inc—New Bedford
Hampden
Service Area: Worthington
Population Group: Low Inc—C Springfield
Hampshire
Service Area: Worthington
Suffolk
Service Area: North Dorchester
Population Group: Low Inc—Mattapan
Population Group: Low Inc—Roxbury
Population Group: Low Inc—South End
Population Group: Low Inc—Allston-Brighton
Worcester
Population Group: Low Inc—Worcester

DENTAL: Massachusetts
Service Area Listing

Service Area Name

North Dorchester
County—Suffolk
Parts:
C.T. 901–924
Worthington
County—Hampden
Parts:
Chester Town

DENTAL: Massachusetts
Service Area Listing

Service Area Name

County—Hampshire
Parts:
Chesterfield Town
Cummington Town
Goshen Town
Middlefield Town
Plainfield Town
Worthington Town

DENTAL: Massachusetts
Population Group Listing

Population Group

Low Inc—Allston-Brighton
County—Suffolk
Parts:
C.T. 1
C.T. 4.01
C.T. 5.01–5.02
C.T. 6.02
C.T. 7.01–7.02
C.T. 8.01–8.02
Low Inc—C Springfield
County—Hampden
Parts:
C.T. 8005–8010
C.T. 8011.01–8011.02
C.T. 8012–8013
C.T. 8014.01–8014.02
C.T. 8015.01–8015.02
C.T. 8017–8020
Low Inc—Fall River
County—Bristol
Parts:
Fall River City
Low Inc—Mattapan
County—Suffolk
Parts:
C.T. 1010.01–1010.02
C.T. 1011.01–1011.02
Low Inc—Mid-Cape
County—Barnstable
Parts:
Barnstable Township
Dennis Township
Harwich Township
Yarmouth Township
Low Inc—New Bedford
County—Bristol
Parts:
New Bedford Twp
Low Inc—Roxbury
County—Suffolk
Parts:
C.T. 801–809
C.T. 811–821
Low Inc—South End
County—Suffolk
Parts:
C.T. 704–712
Low Inc—Worcester
County—Worcester
Parts:
C.T. 7302–7303
C.T. 7304.01–7304.02
C.T. 7305–7307
C.T. 7308.01–7308.02
C.T. 7309.01–7309.02
C.T. 7310
C.T. 7311.01–7311.02
C.T. 7312.01–7312.02
C.T. 7313–7319

DENTAL: Massachusetts
Population Group Listing

Population Group

C.T. 7320.01–7320.02
C.T. 7321
C.T. 7322.01–7322.03
C.T. 7323–7328
C.T. 7329.01–7329.02
C.T. 7330
C.T. 7331.01
C.T. 7331.01–7331.02

DENTAL: Michigan
County Listing

County Name

*Alcona
Population Group: Low Inc—Alcona Co
*Alger
Population Group: Low Inc—Alger Co
*Alpena
Population Group: Low Inc—Alpena Co
*Antrim
Population Group: Low Inc—Antrim Co
*Arenac
Population Group: Low Inc—Arenac Co
*Baraga
Population Group: Low Inc—Baraga Co
*Benzie
Population Group: Low Inc—Benzie Co
Berrien
Population Group: Low Inc—Berrien Co
*Branch
Population Group: Low Inc—Branch Co
Calhoun
Population Group: Low Inc—Calhoun Co
*Cass
Population Group: Low Inc—Cass Co
*Cheboygan
Population Group: Low Inc—Cheboygan Co
*Chippewa
Population Group: Low Inc—Chippewa Co
*Clare
Population Group: Low Inc—Clare Co
*Crawford
Population Group: Low Inc—Crawford Co
*Delta
Population Group: Low Inc—Delta Co
*Dickinson
Population Group: Low Inc—Dickenson Co
*Emmet
Population Group: Low Inc—Emmet Co
Genesee
Population Group: Low Inc—South Flint
Population Group: Low Inc—North Flint
*Gladwin
Population Group: Low Inc—Gladwin Co
*Gogebic
Population Group: Low Inc—Gogebic Co
*Gratiot
Population Group: Low Inc/MFW—Gratiot Co
*Houghton
Population Group: Low Inc—Houghton Co
*Huron
Population Group: Low Inc—Huron Co
*Ionia
Population Group: Low Inc—Ionia Co
*Iosco
Population Group: Low Inc—Iosco Co
*Iron
Population Group: Low Inc—Iron Co
*Isabella
Population Group: Low Inc—Isabella Co

DENTAL: Michigan
County Listing

County Name

Jackson
Population Group: Low Inc—Jackson Co
Kalamazoo
Population Group: Low Inc—Northern Kalamazoo City
Facility: Kalamazoo Co Dental Office
*Kalkaska
Population Group: Low Inc—Kalkaska Co
Kent
Population Group: Low Inc—Grand Rapids
*Keweenaw
Population Group: Low Inc—Keweenaw Co
*Lake
Population Group: Low Inc—Lake Co
*Lenawee
Population Group: Low Inc—W Lenawee
*Luce
Population Group: Low Inc—Luce Co
*Mackinac
Population Group: Low Inc—Mackinac Co
*Manistee
Population Group: Low Inc—Manistee Co
*Marquette
Population Group: Low Inc—Marquette Co
*Mason
Population Group: Low Inc—Mason Co
*Mecosta
Population Group: Low Inc—Mecosta Co
*Menominee
Population Group: Low Inc—Menominee Co
*Missaukee
Population Group: Low Inc—Missaukee Co
Monroe
Population Group: Low Inc—East Central Monroe
*Montcalm
Population Group: Low Inc/MFW—Montcalm Co
*Montmorency
Population Group: Low Inc—Montmorency Co
Muskegon
Population Group: Low Inc—Muskegon Co
*Newaygo
Population Group: Low Inc—Newaygo Co
*Oceana
Population Group: Low Inc—Oceana Co
*Ogemaw
Population Group: Low Inc—Ogemaw Co
*Ontonagon
Population Group: Low Inc—Ontonagon Co
*Osceola
Population Group: Low Inc—Osceola Co
*Oscoda
Population Group: Low Inc—Oscoda Co
*Otsego
Population Group: Low Inc—Otsego Co
*Presque Isle
Population Group: Low Inc—Presque Isle Co
*Roscommon
Population Group: Low Inc—Roscommon Co
Saginaw
Population Group: Low Inc—Eastside Saginaw
*Sanilac
Population Group: Low Inc—Sanilac Co
*Schoolcraft

DENTAL: Michigan
County Listing

County Name

Population Group: Low Inc—Schoolcraft Co
*Tuscola
Population Group: Low Inc—Tuscola Co
Van Buren
Population Group: Low Inc—Van Buren Co
Wayne
Population Group: Low Inc—Tireman/Chadsey
Population Group: Low Inc—Highland Park City
Population Group: Low Inc—Southwest Detroit
Population Group: Low Inc—Romulus City
Population Group: Low Inc—River Rouge City
Population Group: Low Inc—Melvindale City
Population Group: Low Inc—Inkster City
Population Group: Low Inc—Ecorse City
Population Group: Low Inc—Eastside Detroit
Population Group: Low Inc—Mackenzie/Brooks
Population Group: Low Inc—Chene
Population Group: Low Inc—Airport/Conner
Population Group: Low Inc—Nolan/State Fair/Davison/Persh
Population Group: Low Inc—Outer Drive/Van Dyke
*Wexford
Population Group: Low Inc—Wexford Co

DENTAL: Michigan
Population Group Listing

Population Group

Low Inc—Airport/Conner
County—Wayne
Parts:
C.T. 5037
C.T. 5039–5048
C.T. 5052–5053
C.T. 5107–5109
Low Inc—Alcona Co
County—Alcona
Parts:
Low Income
Low Inc—Alger Co
County—Alger
Parts:
Low Income
Low Inc—Alpena Co
County—Alpena
Parts:
Low Income
Low Inc—Antrim Co
County—Antrim
Parts:
Low Income
Low Inc—Arenac Co
County—Arenac
Parts:
Low Income
Low Inc—Baraga Co
County—Baraga
Parts:
Low Income
Low Inc—Benzie Co
County—Benzie
Parts:
Low Income

DENTAL: Michigan
Population Group Listing

Population Group

Low Inc—Berrien Co
County—Berrien
Parts:
Low Income
Low Inc—Branch Co
County—Branch
Parts:
Low Income
Low Inc—Calhoun Co
County—Calhoun
Parts:
Low Income
Low Inc—Cass Co
County—Cass
Parts:
Low Income
Low Inc—Cheboygan Co
County—Cheboygan
Parts:
Low Income
Low Inc—Chene
County—Wayne
Parts:
C.T. 5111
C.T. 5161
C.T. 5177–5178
C.T. 5183–5188
Low Inc—Chippewa Co
County—Chippewa
Parts:
Low Income
Low Inc—Clare Co
County—Clare
Parts:
Low Income
Low Inc—Crawford Co
County—Crawford
Parts:
Low Income
Low Inc—Delta Co
County—Delta
Parts:
Low Income
Low Inc—Dickenson Co
County—Dickinson
Parts:
Low Income
Low Inc—Eastside Detroit
County—Wayne
Parts:
C.T. 5121–5124
C.T. 5126
C.T. 5129
C.T. 5132–5136
C.T. 5139–5143
C.T. 5145–5156
Low Inc—Eastside Saginaw
County—Saginaw
Parts:
C.T. 1–11
C.T. 110
Low Inc—Ecorse City
County—Wayne
Parts:
C.T. 5795
C.T. 5795.99–5796.00
C.T. 5797–5798
Low Inc—Emmet Co
County—Emmet
Parts:
Low Income
Low Inc—Gladwin Co

DENTAL: Michigan
Population Group Listing

Population Group

County—Gladwin
Parts:
Low Income
Low Inc—Gogebic Co
County—Gogebic
Parts:
Low Income
Low Inc—Grand Rapids
County—Kent
Parts:
C.T. 2–5
C.T. 8–10
C.T. 11.01–11.02
C.T. 12–15
C.T. 19–32
C.T. 36–40
Low Inc—Highland Park City
County—Wayne
Parts:
C.T. 5530–5537
Low Inc—Houghton Co
County—Houghton
Parts:
Low Income
Low Inc—Huron Co
County—Huron
Parts:
Low Income
Low Inc—Inkster City
County—Wayne
Parts:
C.T. 5701–5710
Low Inc—Ionia Co
County—Ionia
Parts:
Low Income
Low Inc—Iosco Co
County—Iosco
Parts:
Low Income
Low Inc—Iron Co
County—Iron
Parts:
Low Income
Low Inc—Isabella Co
County—Isabella
Parts:
Low Income
Low Inc—Jackson Co
County—Jackson
Parts:
Low Income
Low Inc—Kalkaska Co
County—Kalkaska
Parts:
Low Income
Low Inc—Keweenaw Co
County—Keweenaw
Parts:
Low Income
Low Inc—Lake Co
County—Lake
Parts:
Low Income
Low Inc—Luce Co
County—Luce
Parts:
Low Income
Low Inc—Mackenzie/Brooks
County—Wayne
Parts:
C.T. 5341–5344

DENTAL: Michigan
Population Group Listing

Population Group

C.T. 5347
C.T. 5350–5357
C.T. 5364–5367
C.T. 5370–5373
C.T. 5377–5378
C.T. 5451–5454
Low Inc—Mackinac Co
County—Mackinac
Parts:
Low Income
Low Inc—Manistee Co
County—Manistee
Parts:
Low Income
Low Inc—Marquette Co
County—Marquette
Parts:
Low Income
Low Inc—Mason Co
County—Mason
Parts:
Low Income
Low Inc—Mecosta Co
County—Mecosta
Parts:
Low Income
Low Inc—Melvindale City
County—Wayne
Parts:
C.T. 5230
C.T. 5986
Low Inc—Menominee Co
County—Menominee
Parts:
Low Income
Low Inc—Missaukee Co
County—Missaukee
Parts:
Low Income
Low Inc—Montmorency Co
County—Montmorency
Parts:
Low Income
Low Inc—Muskegon Co
County—Muskegon
Parts:
Low Income
Low Inc—Newaygo Co
County—Newaygo
Parts:
Low Income
Low Inc—Nolan/State Fair/Davison/Persh
County—Wayne
Parts:
C.T. 5064–5080
C.T. 5102–5106
Low Inc—North Flint
County—Genesee
Parts:
C.T. 1–11
C.T. 14
C.T. 17–27
C.T. 103.02
C.T. 103.04
Low Inc—Northern Kalamazoo City
County—Kalamazoo
Parts:
C.T. 1
C.T. 2.01–2.02
C.T. 3
C.T. 4.02
C.T. 5–6

DENTAL: Michigan
Population Group Listing

Population Group

C.T. 8.01–8.02
C.T. 9–10
Low Inc—Oceana Co
County—Oceana
Parts:
Low Income
Low Inc—Ogemaw Co
County—Ogemaw
Parts:
Low Income
Low Inc—Ontonagon Co
County—Ontonagon
Parts:
Low Income
Low Inc—Osceola Co
County—Osceola
Parts:
Low Income
Low Inc—Oscoda Co
County—Oscoda
Parts:
Low Income
Low Inc—Otsego Co
County—Otsego
Parts:
Low Income
Low Inc—Outer Drive/Van Dyke
County—Wayne
Parts:
C.T. 5035–5036
C.T. 5049–5051
C.T. 5061–5063
Low Inc—Presque Isle Co
County—Presque Isle
Parts:
Low Income
Low Inc—River Rouge City
County—Wayne
Parts:
C.T. 5790–5793
Low Inc—Romulus City
County—Wayne
Parts:
C.T. 5855–5863
Low Inc—Roscommon Co
County—Roscommon
Parts:
Low Income
Low Inc—Sanilac Co
County—Sanilac
Parts:
Low Income
Low Inc—Schoolcraft Co
County—Schoolcraft
Parts:
Low Income
Low Inc—South Flint
County—Genesee
Parts:
C.T. 12–13
C.T. 15
C.T. 28–29
C.T. 32
C.T. 36–40
C.T. 113.01–113.02
Low Inc—Southwest Detroit
County—Wayne
Parts:
C.T. 5208–5209
C.T. 5211–5214
C.T. 5231–5238
C.T. 5240–5243

DENTAL: Michigan
Population Group Listing

Population Group

C.T. 5245
C.T. 5247–5248
Low Inc—Tireman/Chadsey
County—Wayne
Parts:
C.T. 5221–5222
C.T. 5251–5258
C.T. 5260–5265
C.T. 5335–5337
C.T. 5345–5346
Low Inc—Tuscola Co
County—Tuscola
Parts:
Low Income
Low Inc—Van Buren Co
County—Van Buren
Parts:
Low Income
Low Inc—W Lenawee
County—Lenawee
Parts:
Adrian City
Dover Twp
Fairfield Twp
Hudson Twp
Hudson City
Madison Charter Twp
Medina Twp
Morenci City
Rollin Twp
Rome Twp
Seneca Twp
Low Inc—Wexford Co
County—Wexford
Parts:
Low Income
Low Inc–East Central Monroe
County—Monroe
Parts:
Monroe Twp
Monroe City
Low Inc/MFW—Gratiot Co
County—Gratiot
Parts:
Low Income
MFW
Low Inc/MFW—Montcalm Co
County—Montcalm
Parts:
Low Income
MFW

DENTAL: Michigan
Facility Listing

Facility Name

Kalamazoo Co Dental Office
County—Kalamazoo

DENTAL: Minnesota
County Listing

County Name

Anoka
Population Group: Low Inc—Columbia Heights & Hilltop
*Big Stone
Population Group: Low Inc—Big Stone Co
*Chippewa
Population Group: Low Inc—Chippewa Co
Clay
Population Group: Low Inc—Clay Co

DENTAL: Minnesota
County Listing

County Name

*Clearwater
Population Group: Low Inc—Clearwater Co
*Cook
Hennepin
Population Group: Low Inc—NE Minneapolis
Population Group: Low Inc—North Minneapolis
*Kittson
Population Group: Low Inc—Kittson Co
*Koochiching
Service Area: Littlefork/Big Falls
*Lake Of The Woods
Population Group: Low Inc—Lake Of The Woods Co
*Lincoln
Population Group: Low Inc—Lincoln Co
*Mahnomen
Population Group: Low Inc—Mahnomen Co
Olmsted
Facility: Federal Medical Ctr—Rochester
*Pennington
Population Group: Low Inc—Pennington Co
Polk
Population Group: Low Inc—Polk/Red Lake
*Red Lake
Population Group: Low Inc—Polk/Red Lake
*Renville
Population Group: Low Inc—Renville Co
*Roseau
Population Group: Low Inc—Roseau Co
St Louis
Service Area: Cook/Orr
Service Area: Littlefork/Big Falls
*Swift
Population Group: Low Inc—Swift Co
*Traverse
Population Group: Low Inc—Traverse Co
*Yellow Medicine
Population Group: Low Inc—Yellow Medicine Co

DENTAL: Minnesota
Service Area Listing

Service Area Name

Cook/Orr
County—St Louis
Parts:
C.T. 151–152
C.T. 155
Littlefork/Big Falls
County—Koochiching
Parts:
Big Falls City
East Koochiching Unorg.
Littlefork City
Mizpah City
Nett Lake Unorg.
Northome City
Northome Unorg.
Northwest Koochiching Unorg.
South Koochiching Unorg.
County—St Louis
Parts:
Nett Lake Unorg.

DENTAL: Minnesota
Population Group Listing

Population Group
Low Inc—Big Stone Co
County—Big Stone
Parts:
Low Income
Low Inc—Chippewa Co
County—Chippewa
Parts:
Low Income
Low Inc—Clay Co
County—Clay
Parts:
Low Income
Low Inc—Clearwater Co
County—Clearwater
Parts:
Low Income
Low Inc—Columbia Heights & Hilltop
County—Anoka
Parts:
Columbia Heights City
Hilltop City
Low Inc—Kittson Co
County—Kittson
Parts:
Low Income
Low Inc—Lake Of The Woods Co
County—Lake Of The Woods
Parts:
Low Income
Low Inc—Lincoln Co
County—Lincoln
Parts:
Low Income
Low Inc—Mahnomen Co
County—Mahnomen
Parts:
Low Income
Low Inc—North Minneapolis
County—Hennepin
Parts:
C.T. 7–10
C.T. 13–16
C.T. 20–21
C.T. 23
C.T. 27–29
C.T. 32–35
C.T. 41–42
Low Inc—NE Minneapolis
County—Hennepin
Parts:
C.T. 5
C.T. 6.01–6.02
C.T. 11–12
C.T. 17–19
C.T. 24–26
C.T. 30–31
C.T. 36–40
C.T. 49–50
Low Inc—Pennington Co
County—Pennington
Parts:
Low Income
Low Inc—Polk/Red Lake
County—Polk
Parts:
Polk Co
County—Red Lake
Parts:
Red Lake Co
Low Inc—Renville Co
County—Renville
Parts:

DENTAL: Minnesota
Population Group Listing

Population Group
Low Income
Low Inc—Roseau Co
County—Roseau
Parts:
Low Income
Low Inc—Swift Co
County—Swift
Parts:
Low Income
Low Inc—Traverse Co
County—Traverse
Parts:
Low Income
Low Inc—Yellow Medicine Co
County—Yellow Medicine
Parts:
Low Income

DENTAL: Minnesota
Facility Listing

Facility Name
Federal Medical Ctr—Rochester
County—Olmsted

DENTAL: Mississippi
County Listing

County Name
*Amite
*Benton
*Bolivar
*Carroll
*Chickasaw
*Clarke
*Franklin
*Greene
Facility: South Ms Correctional Institution
Hancock
Harrison
Population Group: Low Inc—Harrison Co
Hinds
Population Group: Low Inc—Western Hinds
*Humphreys
*Jefferson
*Kemper
*Lawrence
Madison
Population Group: Low Inc—Madison
*Monroe
Population Group: Low Inc—Monroe Co
*Montgomery
*Noxubee
*Perry
Rankin
Facility: Central Ms Correctional Facility
*Scott
*Sunflower
Facility: Mississippi State Pen.
*Yazoo

DENTAL: Mississippi
Population Group Listing

Population Group
Low Inc—Harrison Co
County—Harrison
Parts:
Low Income
Low Inc—Madison
County—Madison

DENTAL: Mississippi
Population Group Listing

Population Group
Low Inc—Monroe Co
County—Monroe
Parts:
Low Income
Low Inc—Western Hinds
County—Hinds
Parts:
C.T. 106–107
C.T. 112–113

DENTAL: Mississippi
Facility Listing

Facility Name
Central Ms Correctional Facility 2
County—Rankin
Mississippi State Pen.
County—Sunflower
South Ms Correctional Institution
County—Greene

DENTAL: Missouri
County Listing

County Name
*Adair
Population Group: Low Inc—Adair Co
Andrew
Population Group: Low Inc—Andrew Co
*Atchison
Population Group: Low Inc—Atchison Co
*Audrain
Population Group: Low Inc—Audrain Co
*Barry
Population Group: Low Inc—Barry Co
*Barton
Population Group: Low Inc—Barton Co
*Bates
*Benton
Population Group: Low Inc—Benton Co
*Bollinger
Boone
Population Group: Low Inc—Boone Co
Population Group: Low Inc—Boone Co
Buchanan
Population Group: Low Inc—Buchanan Co
*Butler
Population Group: Low Inc—Butler Co
*Caldwell
Population Group: Low Inc—Caldwell Co
*Callaway
Population Group: Low Inc—Callaway Co
*Camden
Population Group: Low Inc—Camden Co
*Cape Girardeau
Population Group: Low Inc—Cape Girardeau Co
*Carter
*Cedar
Population Group: Low Inc—Cedar Co
*Chariton
Christian
Population Group: Low Inc—Christian Co
*Clark
Clinton
Population Group: Low Inc—Clinton Co
*Cooper
Population Group: Low Inc—Cooper Co
*Crawford
Population Group: Low Inc—Crawford Co
*Dade
*Dallas

DENTAL: Missouri
County Listing

County Name

*Daviess
Population Group: Low Inc—Daviess Co
*De Kalb
Population Group: Low Inc—Dekalb Co
*Dent
Population Group: Low Inc—Dent Co
*Douglas
Population Group: Low Inc—Douglas Co
*Dunklin
Population Group: Low Inc—Dunklin Co
Franklin
Population Group: Low Inc—Franklin Co
*Gasconade
Population Group: Low Inc—Gasconade
*Gentry
Population Group: Low Inc—Gentry Co
Greene
Population Group: Low Inc—Greene Co
*Grundy
Population Group: Low Inc—Grundy Co
*Harrison
Population Group: Low Inc—Harrison Co
*Henry
Population Group: Low Inc—Henry Co
*Hickory
*Holt
*Howard
Population Group: Low Inc—Howard Co
*Howell
Population Group: Low Inc—Howell Co
*Iron
Jackson
Population Group: Low Inc—Central Kansas City
Population Group: Low Inc—North Kansas City
Jasper
Population Group: Low Inc—Jasper Co
Jefferson
Population Group: Low Inc—Jefferson Co
*Johnson
Population Group: Low Inc—Johnson Co
*Knox
Population Group: Low Inc—Knox Co
*Laclede
Population Group: Low Inc—Laclede Co
Lafayette
Population Group: Low Inc—Lafayette Co
*Lawrence
Population Group: Low Inc—Lawrence Co
*Lewis
Population Group: Low Inc—Lewis Co
Lincoln
Population Group: Low Inc—Lincoln Co
*Linn
Population Group: Low Inc—Linn Co
*Livingston
Population Group: Low Inc—Livingston Co
*Macon
Population Group: Low Inc—Macon Co
*Madison
Population Group: Low Inc—Madison Co
*Marion
Population Group: Low Inc—Marion Co
*McDonald
Population Group: Low Inc—Mcdonald Co
*Mercer
*Mississippi
Population Group: Low Inc—Mississippi Co
*Montgomery
*New Madrid

DENTAL: Missouri
County Listing

County Name

Population Group: Low Inc—New Madrid Co
Newton
Population Group: Low Inc—Newton Co
*Nodaway
Population Group: Low Inc—Nodaway Co
*Oregon
*Osage
Population Group: Low Inc—Osage Co
*Ozark
*Pemiscot
*Perry
Population Group: Low Inc—Perry Co
*Pettis
Population Group: Low Inc—Pettis Co
*Phelps
Population Group: Low Inc—Phelps Co
*Pike
Population Group: Low Inc—Pike Co
*Polk
Population Group: Low Inc—Polk Co
*Pulaski
Population Group: Low Inc—Pulaski Co
*Putnam
Population Group: Low Inc—Putnam Co
Ray
Population Group: Low Income—Ray Co
*Reynolds
Population Group: Low Inc—Reynolds Co
*Ripley
*Saline
Population Group: Low Inc—Saline Co
*Schuyler
Population Group: Low Inc—Schuyler Co
*Scotland
Population Group: Low Inc—Scotland Co
*Scott
Population Group: Low Inc—Scott Co
*Shelby
Population Group: Low Inc—Shelby Co
*St Clair
Population Group: Low Inc—St Clair Co
*St Francois
Population Group: Low Inc—St Francois Co
St Louis City
Population Group: Low Inc—N. St. Louis
Population Group: Low Inc—W. Central St. Louis
Population Group: Low Inc—Southeast St. Louis
Population Group: Low Inc—E. Central St. Louis
*Ste Genevieve
Population Group: Low Inc—Ste Genevieve
*Stoddard
Population Group: Low Inc—Stoddard Co
*Stone
Population Group: Low Inc—Stone Co
*Sullivan
Population Group: Low Inc—Sullivan Co
*Texas
Population Group: Low Inc—Texas Co
*Vernon
Population Group: Low Inc—Vernon Co
*Washington
*Wayne
Webster
Population Group: Low Inc—Webster Co
*Worth
Population Group: Low Inc—Worth Co

DENTAL: Missouri
County Listing

County Name

*Wright
Population Group: Low Inc—Wright Co

DENTAL: Missouri
Population Group Listing

Population Group

Low Inc—Adair Co
County—Adair
Parts:
Low Income
Low Inc—Andrew Co
County—Andrew
Parts:
Low Income
Low Inc—Atchison Co
County—Atchison
Parts:
Low Income
Low Inc—Audrain Co
County—Audrain
Parts:
Low Income
Low Inc—Barry Co
County—Barry
Parts:
Low Income
Low Inc—Barton Co
County—Barton
Parts:
Low Income
Low Inc—Benton Co
County—Benton
Parts:
Low Income
Low Inc—Boone Co
County—Boone
Parts:
Low Income
Low Inc—Boone Co
County—Boone
Parts:
Low Income
Low Inc—Buchanan Co
County—Buchanan
Parts:
Low Income
Low Inc—Butler Co
County—Butler
Parts:
Low Income
Low Inc—Caldwell Co
County—Caldwell
Parts:
Low Income
Low Inc—Callaway Co
County—Callaway
Parts:
Low Income
Low Inc—Camden Co
County—Camden
Parts:
Low Income
Low Inc—Cape Girardeau Co
County—Cape Girardeau
Parts:
Low Income
Low Inc—Cedar Co
County—Cedar
Parts:
Low Income
Low Inc—Central Kansas City

DENTAL: Missouri
Population Group Listing

Population Group

County—Jackson
Parts:
C.T. 45–57
C.T. 58.01–58.02
C.T. 59.01–59.02
C.T. 60–99
C.T. 100.01–100.02
C.T. 101.03
C.T. 102.01
C.T. 103.01
C.T. 104.01
C.T. 130.01
Low Inc—Christian Co
County—Christian
Parts:
Low Income
Low Inc—Clinton Co
County—Clinton
Parts:
Low Income
Low Inc—Cooper Co
County—Cooper
Parts:
Low Income
Low Inc—Crawford Co
County—Crawford
Parts:
Low Income
Low Inc—Daviess Co
County—Daviess
Parts:
Low Income
Low Inc—Dekalb Co
County—De Kalb
Parts:
Low Income
Low Inc—Dent Co
County—Dent
Parts:
Low Income
Low Inc—Douglas Co
County—Douglas
Parts:
Low Income
Low Inc—Dunklin Co
County—Dunklin
Parts:
Low Income
Low Inc—E. Central St. Louis
County—St Louis City
Parts:
C.T. 1171–1172
C.T. 1181
C.T. 1184
C.T. 1186
C.T. 1211
C.T. 1214
C.T. 1222
C.T. 1255–1256
Low Inc—Franklin Co
County—Franklin
Parts:
Low Income
Low Inc—Gasconade
County—Gasconade
Parts:
Low Income
Low Inc—Gentry Co
County—Gentry
Parts:
Low Income
Low Inc—Greene Co

DENTAL: Missouri
Population Group Listing

Population Group

County—Greene
Parts:
Low Income
Low Inc—Grundy Co
County—Grundy
Parts:
Low Income
Low Inc—Harrison Co
County—Harrison
Parts:
Low Income
Low Inc—Henry Co
County—Henry
Parts:
Low Income
Low Inc—Howard Co
County—Howard
Parts:
Low Income
Low Inc—Howell Co
County—Howell
Parts:
Low Income
Low Inc—Jasper Co
County—Jasper
Parts:
Low Income
Low Inc—Jefferson Co
County—Jefferson
Parts:
Low Income
Low Inc—Johnson Co
County—Johnson
Parts:
Low Income
Low Inc—Knox Co
County—Knox
Parts:
Low Income
Low Inc—Laclede Co
County—Laclede
Parts:
Low Income
Low Inc—Lafayette Co
County—Lafayette
Parts:
Low Income
Low Inc—Lawrence Co
County—Lawrence
Parts:
Low Income
Low Inc—Lewis Co
County—Lewis
Parts:
Low Income
Low Inc—Lincoln Co
County—Lincoln
Parts:
Low Income
Low Inc—Linn Co
County—Linn
Parts:
Low Income
Low Inc—Livingston Co
County—Livingston
Parts:
Low Income
Low Inc—Macon Co
County—Macon
Parts:
Low Income
Low Inc—Madison Co

DENTAL: Missouri
Population Group Listing

Population Group

County—Madison
Parts:
Low Income
Low Inc—Marion Co
County—Marion
Parts:
Low Income
Low Inc—Mcdonald Co
County—McDonald
Parts:
Low–Income
Low Inc—Mississippi Co
County—Mississippi
Parts:
Low Income
Low Inc—N. St. Louis
County—St Louis City
Parts:
C.T. 1053–1055
C.T. 1061–1067
C.T. 1071–1077
C.T. 1081–1082
C.T. 1085
C.T. 1096–1097
C.T. 1101–1105
C.T. 1111–1115
C.T. 1122–1123
C.T. 1201–1203
C.T. 1212–1213
C.T. 1257
C.T. 1266–1267
Low Inc—New Madrid Co
County—New Madrid
Parts:
Low Income
Low Inc—Newton Co
County—Newton
Parts:
Low Income
Low Inc—Nodaway Co
County—Nodaway
Parts:
Low Income
Low Inc—North Kansas City
County—Jackson
Parts:
C.T. 1–4
C.T. 5.01
C.T. 6–27
C.T. 28.01–28.02
C.T. 29–34
C.T. 35.01–35.02
C.T. 36.01–36.02
C.T. 37–45
C.T. 59.01
Low Inc—Osage Co
County—Osage
Parts:
Low Income
Low Inc—Perry Co
County—Perry
Parts:
Low Income
Low Inc—Pettis Co
County—Pettis
Parts:
Low Income
Low Inc—Phelps Co
County—Phelps
Parts:
Low Income
Low Inc—Pike Co

DENTAL: Missouri
Population Group Listing

Population Group

County—Pike
Parts:
Low Income
Low Inc—Polk Co
County—Polk
Parts:
Low–Income
Low Inc—Pulaski Co
County—Pulaski
Parts:
Low Income
Low Inc—Putnam Co
County—Putnam
Parts:
Low Income
Low Inc—Reynolds Co
County—Reynolds
Parts:
Low Income
Low Inc—Saline Co
County—Saline
Parts:
Low Income
Low Inc—Schuyler Co
County—Schuyler
Parts:
Low Income
Low Inc—Scotland Co
County—Scotland
Parts:
Low Income
Low Inc—Scott Co
County—Scott
Parts:
Low Income
Low Inc—Shelby Co
County—Shelby
Parts:
Low Income
Low Inc—Southeast St. Louis
County—St Louis City
Parts:
C.T. 1014–1015
C.T. 1018
C.T. 1018.99
C.T. 1155–1157
C.T. 1164–1165
C.T. 1173–1174
C.T. 1185
C.T. 1221
C.T. 1224
C.T. 1231–1235
C.T. 1241–1243
C.T. 1246
Low Inc—St Clair Co
County—St Clair
Parts:
Low Income
Low Inc—St Francois Co
County—St Francois
Parts:
Low Income
Low Inc—Ste Genevieve
County—Ste Genevieve
Parts:
Low Income
Low Inc—Stoddard Co
County—Stoddard
Parts:
Low Income
Low Inc—Stone Co
County—Stone

DENTAL: Missouri
Population Group Listing

Population Group

Parts:
Low Income
Low Inc—Sullivan Co
County—Sullivan
Parts:
Low Income
Low Inc—Texas Co
County—Texas
Parts:
Low Income
Low Inc—Vernon Co
County—Vernon
Parts:
Low Income
Low Inc—W. Central St. Louis
County—St Louis City
Parts:
C.T. 1051.98
C.T. 1052
C.T. 1121
C.T. 1124
C.T. 1191–1193
Low Inc—Webster Co
County—Webster
Parts:
Low–Income
Low Inc—Worth Co
County—Worth
Parts:
Low Income
Low Inc—Wright Co
County—Wright
Parts:
Low Income
Low Income—Ray Co
County—Ray
Parts:
Low Income

DENTAL: Montana
County Listing

County Name

*Blaine
Service Area: Havre
*Carter
Service Area: Baker/Ekalaka
Service Area: Miles City
Cascade
Population Group: Medicaid—Cascade Co
*Custer
Service Area: Miles City
*Dawson
Service Area: Glendive
*Fallon
Service Area: Baker/Ekalaka
*Garfield
Service Area: Miles City
*Glacier
*Golden Valley
*Hill
Service Area: Havre
*Madison
Population Group: Low Inc—Madison County
*McCone
Service Area: Glendive
*Missoula
Population Group: Low Income—Missoula
*Park
Population Group: Low Inc—Park Co
*Powder River

DENTAL: Montana
County Listing

County Name

Service Area: Miles City
*Prairie
Service Area: Glendive
Service Area: Miles City
*Roosevelt
Service Area: Poplar/Wolf Point
*Sanders
*Silver Bow
Population Group: Low Inc—Silver Bow Co
*Stillwater
*Treasure
*Wheatland
*Wibaux
Service Area: Glendive
Yellowstone
Population Group: Low Inc—Yellowstone Co

DENTAL: Montana
Service Area Listing

Service Area Name

Baker/Ekalaka
County—Carter
Parts:
Ekalaka Division
County—Fallon
Glendive
County—Dawson
County—McCone
County—Prairie
Parts:
Terry South Division
County—Dawson
County—McCone
County—Wibaux
Havre
County—Blaine
County—Hill
Miles City
County—Carter
Parts:
Little Missouri Division
County—Custer
County—Garfield
County—Powder River
County—Prairie
Parts:
Terry North Division
Poplar/Wolf Point
County—Roosevelt
Parts:
Fort Peck Reservation Division

DENTAL: Montana
Population Group Listing

Population Group

Low Inc—Madison County
County—Madison
Parts:
Low Income
Low Inc—Park Co
County—Park
Parts:
Low Income
Low Inc—Silver Bow Co
County—Silver Bow
Parts:
Low Income
Low Inc—Yellowstone Co
County—Yellowstone

DENTAL: Montana
Population Group Listing

Population Group

Parts:
Yellowstone
Low Income—Missoula
County—Missoula
Parts:
Low–Income
Medicaid—Cascade Co
County—Cascade
Parts:
Medicaid Eligible

DENTAL: Nebraska
County Listing

County Name

*Arthur
Service Area: Arthur/Grant
*Blaine
*Cuming
Population Group: Am In—Winnebago/Omaha
*Frontier
*Furnas
*Grant
Service Area: Arthur/Grant
*Greeley
Service Area: Greeley/Wheeler
*Hayes
Service Area: Hayes/Hitchcock
*Hitchcock
Service Area: Hayes/Hitchcock
*Logan
Service Area: Logan/MCPherson
*Morrill
*MCPherson
Service Area: Logan/MCPherson
*Scotts Bluff
Population Group: Medicaid—Scotts Bluff Co
*Thurston
Population Group: Am In—Winnebago/Omaha
*Wheeler
Service Area: Greeley/Wheeler

DENTAL: Nebraska
Service Area Listing

Service Area Name

Arthur/Grant
County—Arthur
County—Grant
Greeley/Wheeler
County—Greeley
County—Wheeler
Hayes/Hitchcock
County—Hayes
County—Hitchcock
Logan/MCPherson
County—Logan
County—MCPherson

DENTAL: Nebraska
Population Group Listing

Population Group

Am In—Winnebago/Omaha
County—Cuming
Parts:
Om In—Bancroft Twp
Om In—Cleveland Twp
County—Thurston

DENTAL: Nebraska
Population Group Listing

Population Group

Parts:
Winnebago Indians
Medicaid—Scotts Bluff Co
County—Scotts Bluff
Parts:
Medicaid Eligible

DENTAL: Nevada
County Listing

County Name

*Churchill
Service Area: Dixie Valley
Clark
Service Area: Northeast Clark
Population Group: Low Inc—North Central Las Vegas
Population Group: Low Inc—NE Central Las Vegas
Population Group: Low Inc—SW Central Las Vegas
*Elko
Service Area: Jackpot
Service Area: Montello/West Wendover
Service Area: Mountain City/Jarbidge
Service Area: Wells
*Esmeralda
*Eureka
*Humboldt
Service Area: McDermitt
Service Area: Summit Lake
*Nye
*Pershing
Washoe
Population Group: Low Inc—Reno/Sparks

DENTAL: Nevada
Service Area Listing

Service Area Name

Dixie Valley
County—Churchill
Parts:
Dixie Valley Division
Jackpot
County—Elko
Parts:
Jackpot Division
McDermitt
County—Humboldt
Parts:
McDermitt Division
Montello/West Wendover
County—Elko
Parts:
Montello Division
West Wendover Division
Mountain City/Jarbidge
County—Elko
Parts:
Jarbidge Division
Mountain City Division
Northeast Clark
County—Clark
Parts:
C.T. 56.02–56.03
C.T. 59
Summit Lake
County—Humboldt
Parts:
Summit Lake Division
Wells

DENTAL: Nevada
Service Area Listing

Service Area Name

County—Elko
Parts:
Wells Division

DENTAL: Nevada
Population Group Listing

Population Group

Low Inc—North Central Las Vegas
County—Clark
Parts:
C.T. 1.01–1.02
C.T. 1.04–1.05
C.T. 2.01–2.02
C.T. 3.01–3.02
C.T. 4
C.T. 5.03–5.04
C.T. 5.06–5.09
C.T. 6–9
C.T. 10.98
C.T. 11–15
C.T. 16.02
C.T. 34.01
C.T. 35
C.T. 36.02
C.T. 37–38
C.T. 39.97
C.T. 40–45
C.T. 47.02
Low Inc—NE Central Las Vegas
County—Clark
Parts:
C.T. 46
C.T. 47.03–47.06
C.T. 48.97–48.98
Low Inc—SW Central Las Vegas
County—Clark
Parts:
C.T 24.02
C.T 25.01
C.T. 18.02
C.T. 19–20
C.T. 22.01–22.02
C.T. 23
C.T. 24.01
C.T. 25.02
C.T. 26
C.T. 27.01–27.02
C.T. 29.13
Low Inc—Reno/Sparks
County—Washoe
Parts:
C.T. 1–3
C.T. 7
C.T. 9
C.T. 10.04
C.T. 14–15
C.T. 17–19
C.T. 21.01
C.T. 22.03–22.04
C.T. 28
C.T. 33.01

DENTAL: New Hampshire
County Listing

County Name

*Belknap
Population Group: Low Inc—Laconia
Facility: SCI—Laconia
*Coos
Service Area: Upper Connecticut Valley

DENTAL: New Hampshire
County Listing

County Name

Population Group: Low Inc—Berlin
*Grafton
Population Group: Low Inc—Laconia
Population Group: Low Inc—Northern Grafton
Hillsboro
Population Group: Low Inc—Manchester
Merrimack
Population Group: Low Inc—Laconia
Facility: SCI—Concord

DENTAL: New Hampshire
Service Area Listing

Service Area Name

Upper Connecticut Valley
County—Coos
Parts:
Clarksville Town
Colebrook Town
Columbia Town
Dixville Township
Errol Town
Millsfield Township
Pittsburg Town
Stewartstown Town
Wentworth Location

DENTAL: New Hampshire
Population Group Listing

Population Group

Low Inc—Berlin
County—Coos
Parts:
Berlin City
Cambridge Township
Dummer Town
Gorham Town
Milan Town
Randolph Town
Shelburne Town
Stark Town
Success Township
Low Inc—Laconia
County—Belknap
Parts:
Alton Town
Barnstead Town
Belmont Town
Center Harbor Town
Gilford Town
Gilmanton Town
Laconia City
Meredith Town
New Hampton Town
Sanbornton Town
Tilton Town
County—Grafton
Parts:
Ashland Town
Bridgewater Town
Bristol Town
Campton Town
Holderness Town
Plymouth Town
County—Merrimack
Parts:
Boscawen Town
Canterbury Town
Franklin City
Loudon Town

DENTAL: New Hampshire
Population Group Listing

Population Group

Northfield Town
Pittsfield Town
Low Inc—Manchester
County—Hillsboro
Parts:
C.T. 1
C.T. 2.01–2.02
C.T. 3–8
C.T. 9.01
C.T. 11–25
Low Inc—Northern Grafton
County—Grafton
Parts:
Bath Town
Benton Town
Bethlehem Town
Easton Town
Ellsworth Town
Franconia Town
Haverhill Town
Landaff Town
Lincoln Town
Lisbon Town
Littleton Town
Livermore Town
Lyman Town
Monroe Town
Orford Town
Piermont Town
Rumney Town
Sugar Hill Town
Thornton Town
Warren Town
Waterville Valley Town
Wentworth Town
Woodstock Town

DENTAL: New Hampshire
Facility Listing

Facility Name

SCI—Concord
County—Merrimack
SCI—Laconia
County—Belknap

DENTAL: New Jersey
County Listing

County Name

Atlantic
Population Group: Low Inc—Hammonton
Camden
Population Group: Low Inc—Camden City
Cumberland
Population Group: Low Inc/MFW—Cumberland Co
Facility: FCI Fairton
Mercer
Population Group: Medicaid—Trenton
Salem
Population Group: Low Inc/MFW—West Salem

DENTAL: New Jersey
Population Group Listing

Population Group

Low Inc—Camden City
County—Camden
Parts:
Camden City (6001–6020)

DENTAL: New Jersey
Population Group Listing

Population Group

Low Inc—Hammonton
County—Atlantic
Parts:
Buena Borough
Buena Vista
Egg Harbor City
Folsom Borough
Hammonton
Mullica
Low Inc/MFW—Cumberland Co
County—Cumberland
Parts:
Low Income
MFW
Low Inc/MFW—West Salem
County—Salem
Parts:
Carney's Point Township
Mannington Township
Oldman's Township
Penns Grove Borough
Pennsville Township
Salem City
Medicaid—Trenton
County—Mercer
Parts:
C.T. 1–24

DENTAL: New Jersey
Facility Listing

Facility Name

FCI Fairton 1
County—Cumberland

DENTAL: New Mexico
County Listing

County Name

Bernalillo
Service Area: North Valley
Service Area: Southwest Valley
*Catron
*Cibola
*Curry
Population Group: Low Inc—Curry Co
Dona Ana
Service Area: Hatch
Service Area: Southern Dona Ana
Population Group: Low Inc—Las Cruces
Population Group: Low Income—Dona Ana Hill
*Eddy
Population Group: Low Inc—Eddy Co
*Grant
Population Group: Low Inc—Grant Co
*Guadalupe
*Harding
*Hidalgo
*Luna
*McKinley
*Mora
*Otero
*Rio Arriba
Service Area: North/Western Rio Arriba
Service Area: Penasco/Truchas/Embudo
*Roosevelt
Population Group: Low Income—Roosevelt Co
*San Miguel
Sandoval
Service Area: Cuba (N. Sandoval)

DENTAL: New Mexico
County Listing

County Name

Santa Fe
  Population Group: Low-Inc—Santa Fe Co
*Sierra
*Taos
  Service Area: North/Western Rio Arriba
  Service Area: Penasco/Truchas/Embudo
  Service Area: Questa
*Torrance
Valencia
  Population Group: Low Inc—Valencia

DENTAL: New Mexico
Service Area Listing

Service Area Name

Cuba (N. Sandoval)
  County—Sandoval
    Parts:
      Cuba Division
      Jemez Division
      Santo Domingo Division
Hatch
  County—Dona Ana
    Parts:
      Hatch Division
North Valley
  County—Bernalillo
    Parts:
      C.T. 29
      C.T. 30.01–30.02
      C.T. 31
      C.T. 32.01–32.02
      C.T. 35.01–35.02
      C.T. 36
North/Western Rio Arriba
  County—Rio Arriba
    Parts:
      Coyote Division
      Jicarilla Division
      Rio Chama Division
      Tierra Amarilla Division
      Vallecitas Division
      Western Rio Arriba Division
  County—Taos
    Parts:
      Tres Piedras Division
Penasco/Truchas/Embudo
  County—Rio Arriba
    Parts:
      Chimayo Division
      Dixon Division
  County—Taos
    Parts:
      Penasco Division
      Picuris Division
Questa
  County—Taos
    Parts:
      Arroyo Hondo Division
      Questa Division
Southern Dona Ana
  County—Dona Ana
    Parts:
      Anthony Division
      South Dona Ana Division
Southwest Valley
  County—Bernalillo
    Parts:
      C.T. 23
      C.T. 24.01–24.02
      C.T. 40.01
      C.T. 43

DENTAL: New Mexico
Service Area Listing

Service Area Name

C.T. 44.01–44.02
C.T. 45.01–45.02
C.T. 46.02–46.04

DENTAL: New Mexico
Population Group Listing

Population Group

Low Inc—Curry Co 2
  County—Curry
    Parts:
      Low Income
Low Inc—Eddy Co
  County—Eddy
    Parts:
      Low Income
Low Inc—Grant Co
  County—Grant
    Parts:
      Low Income
Low Inc—Las Cruces
  County—Dona Ana
    Parts:
      Las Cruces Division
Low Inc—Valencia
  County—Valencia
    Parts:
      Low Income
Low Income—Dona Ana Hill
  County—Dona Ana
    Parts:
      Low Income
Low Income—Roosevelt Co
  County—Roosevelt
    Parts:
      Low Income
Low-Inc—Santa Fe Co
  County—Santa Fe
    Parts:
      Low Inc

DENTAL: New York
County Listing

County Name

*Allegany
  Service Area: Arcade
  Service Area: Letchworth
  Population Group: Low Inc—Wellsville
Bronx
  Service Area: Morris Heights
*Cattaraugus
  Service Area: Arcade
  Service Area: Randolph-Ellicottville
  Population Group: Low Inc—Olean
Cayuga
  Population Group: Low-Income Groton-Moravia
Chautauqua
  Population Group: Low Inc—Dunkirk/Fredonia
  Population Group: Low Inc—Jamestown
  Population Group: Low Inc—Westfield
*Clinton
  Population Group: Low Income—Dannemora
*Cortland
  Population Group: Low Income—Cortland Co
Dutchess
  Population Group: Low Inc—Beacon City
*Essex
  Population Group: Low Inc—Upper Hudson
*Franklin
  Facility: FCI Raybrook
*Hamilton
  Population Group: Low Inc—Upper Hudson
*Jefferson
  Population Group: Low-Income Jefferson County
Kings
  Service Area: Bedford-Stuyvesant
  Service Area: Coney Island
  Service Area: Sunset Park
*Lewis
  Population Group: Low Inc—Lewis Co
Monroe
  Population Group: Low Inc—Westside Rochester
New York
  Service Area: Central/West Harlem
  Service Area: East Harlem
  Service Area: Lower East Side
  Service Area: Washington Hgts/Inwood
  Population Group: Low Inc—Chinatown/Lwr Manhattan
Onondaga
  Population Group: Low Inc—Syracuse
Orange
  Service Area: City Of Newburgh
  Population Group: MFW—Goshen/Warwick
  Population Group: MFW—Walden
Oswego
  Population Group: Low Inc—Oswego Co
Saratoga
  Population Group: Low Inc—Upper Hudson
Schenectady
  Population Group: Low Inc—Central Schenectady City
*St Lawrence
  Population Group: Low Income—Ogdensburg
Tioga
  Population Group: Low Income—Tioga County
*Tompkins
  Population Group: Low-Income Groton-Moravia
*Ulster
  Population Group: MFW—New Paltz
Warren
  Population Group: Low Inc—Upper Hudson
Washington
  Population Group: Low Inc—Upper Hudson
*Wyoming
  Service Area: Arcade
  Service Area: Letchworth

DENTAL: New York
Service Area Listing

Service Area Name

Arcade
  County—Allegany
    Parts:
      Centerville Town
      Rushford Town
  County—Cattaraugus
    Parts:
      Farmersville Town
      Freedom Town
      Machias Town
      Yorkshire Town
  County—Wyoming

DENTAL: New York
Service Area Listing

Service Area Name

Parts:
Arcade Town
Eagle Town
Java Town
Orangeville Town
Sheldon Town
Wethersfield Town
Bedford-Stuyvesant
County—Kings
Parts:
C.T. 213
C.T. 217
C.T. 219
C.T. 221
C.T. 223
C.T. 225
C.T. 227
C.T. 229
C.T. 231
C.T. 233
C.T. 235
C.T. 237
C.T. 239
C.T. 241
C.T. 243
C.T. 245
C.T. 247
C.T. 249
C.T. 251
C.T. 253
C.T. 255
C.T. 257
C.T. 259.01–259.02
C.T. 261
C.T. 263
C.T. 265
C.T. 267
C.T. 269
C.T. 271.01–271.02
C.T. 273
C.T. 275
C.T. 277
C.T. 279
C.T. 281
C.T. 283
C.T. 285.01–285.02
C.T. 287
C.T. 289
C.T. 291
C.T. 293
C.T. 295
C.T. 297
C.T. 299
C.T. 301
C.T. 303
C.T. 307
C.T. 309
C.T. 311
C.T. 313
C.T. 315
C.T. 317.01–317.02
C.T. 319
C.T. 321
C.T. 323
C.T. 325
C.T. 327
C.T. 329
C.T. 331
C.T. 333
C.T. 335
C.T. 337
C.T. 339

DENTAL: New York
Service Area Listing

Service Area Name

C.T. 341
C.T. 343
C.T. 345
C.T. 347
C.T. 349
C.T. 351
C.T. 353
C.T. 355
C.T. 357
C.T. 359
C.T. 361
C.T. 363
C.T. 365.01–365.02
C.T. 367
C.T. 369
C.T. 371
C.T. 373
C.T. 375
C.T. 377
C.T. 379
C.T. 381
C.T. 383
C.T. 385
C.T. 387
Central/West Harlem
County—New York
Parts:
C.T. 186
C.T. 190
C.T. 197.02
C.T. 200
C.T. 201.02
C.T. 207.02
C.T. 208
C.T. 209.01–209.02
C.T. 211–212
C.T. 213.01–213.02
C.T. 214
C.T. 216
C.T. 217.01–217.02
C.T. 218
C.T. 219.97
C.T. 220
C.T. 221.01–221.02
C.T. 222
C.T. 223.97–223.98
C.T. 224–226
C.T. 227.01–227.02
C.T. 228–230
C.T. 231.01–231.02
C.T. 232–234
C.T. 235.01–235.02
C.T. 236–237
C.T. 239
C.T. 241
C.T. 243.02
City Of Newburgh
County—Orange
Parts:
C.T. 1–6
Coney Island
County—Kings
Parts:
C.T. 326
C.T. 328
C.T. 330
C.T. 340
C.T. 342
C.T. 348.01
C.T. 352
East Harlem
County—New York

DENTAL: New York
Service Area Listing

Service Area Name

Parts:
C.T. 156.02
C.T. 158.02
C.T. 160.02
C.T. 162
C.T. 164
C.T. 166
C.T. 168
C.T. 170
C.T. 172.01–172.02
C.T. 174.01–174.02
C.T. 178
C.T. 180
C.T. 182
C.T. 184
C.T. 188
C.T. 192
C.T. 194
C.T. 196
C.T. 198
C.T. 202
C.T. 204
C.T. 206
C.T. 210
Letchworth
County—Allegany
Parts:
Allen Town
Caneadea Town
Granger Town
Hume Town
County—Wyoming
Parts:
Castile Town
Gainesville Town
Genesee Falls Town
Pike Town
Lower East Side
County—New York
Parts:
C.T. 10.02
C.T. 20
C.T. 22.01–22.02
C.T. 24
C.T. 26.01–26.02
C.T. 28
Morris Heights
County—Bronx
Parts:
C.T. 205
C.T. 213.01–213.02
C.T. 215.01–215.02
C.T. 217.01
C.T. 239
C.T. 243
C.T. 245
C.T. 247
C.T. 249
C.T. 251
C.T. 253
C.T. 255
C.T. 257
Randolph-Ellicottville
County—Cattaraugus
Parts:
Carrollton Town
Coldspring Town
Conewango Town
Ellicottville Town
Franklinville Town
Great Valley Town
Humphrey Town

DENTAL: New York
Service Area Listing

Service Area Name

Little Valley Town
Mansfield Town
Napoli Town
New Albion Town
Randolph Town
Red House Town
Salamanca City
Salamanca Town
South Valley Town
Sunset Park
County—Kings
Parts:
C.T. 2
C.T. 18
C.T. 20
C.T. 22
C.T. 72
C.T. 74
C.T. 76
C.T. 78
C.T. 80
C.T. 82
C.T. 84
C.T. 86
C.T. 88
C.T. 90
C.T. 92
C.T. 94
C.T. 96
C.T. 98
C.T. 100–102
C.T. 108
C.T. 110
C.T. 112
C.T. 117
C.T. 121–122
C.T. 141
C.T. 143
C.T. 145
C.T. 147
Washington Hgts/Inwood
County—New York
Parts:
C.T. 243.01
C.T. 245
C.T. 247
C.T. 249
C.T. 251
C.T. 253
C.T. 255
C.T. 261
C.T. 263
C.T. 265
C.T. 267
C.T. 269
C.T. 271
C.T. 273
C.T. 275
C.T. 277
C.T. 279
C.T. 281
C.T. 283
C.T. 285
C.T. 287
C.T. 289
C.T. 291
C.T. 293
C.T. 295
C.T. 297
C.T. 301
C.T. 303
C.T. 307

DENTAL: New York
Service Area Listing

Service Area Name

C.T. 309
C.T. 311

DENTAL: New York
Population Group Listing

Population Group

Low Inc—Beacon City
County—Dutchess
Parts:
C.T. 2101–2103
Low Inc—Central Schenectady City
County—Schenectady
Parts:
C.T. 201–204
C.T. 207–209
C.T. 210.01–210.02
C.T. 211.02–211.03
C.T. 214–215
C.T. 217
Low Inc—Chinatown/Lwr Manhattan
County—New York
Parts:
C.T. 2.01–2.02
C.T. 6
C.T. 8
C.T. 10.01
C.T. 14.01–14.02
C.T. 15.01
C.T. 16
C.T. 18
C.T. 25
C.T. 27
C.T. 29
C.T. 30.01–30.02
C.T. 32
C.T. 34
C.T. 36.01–36.02
C.T. 38
C.T. 40–41
C.T. 43
C.T. 45
C.T. 55.02
Low Inc—Dunkirk/Fredonia
County—Chautauqua
Parts:
Arkwright Town
Charlotte Town
Dunkirk City
Dunkirk Town
Pomfret Town
Portland Town
Sheridan Town
Stockton Town
Low Inc—Jamestown
County—Chautauqua
Parts:
Busti Town
Carroll Town
Ellery Town
Ellicott Town
Ellington Town
Gerry Town
Harmony Town
Jamestown City
Kiantone Town
North Harmony Town
Poland Town
Low Inc—Lewis Co
County—Lewis
Parts:
Low Income

DENTAL: New York
Population Group Listing

Population Group

Low Inc—Olean
County—Cattaraugus
Parts:
Allegany Town
Hinsdale Town
Ischua Town
Lyndon Town
Olean City
Olean Town
Portville Town
Low Inc—Oswego Co
County—Oswego
Parts:
Low Income
Low Inc—Syracuse
County—Onondaga
Parts:
C.T. 5–7
C.T. 13–16
C.T. 21–24
C.T. 29–35
C.T. 36.01
C.T. 38–45
C.T. 51–55
C.T. 57–59
C.T. 61.01–61.02
Low Inc—Upper Hudson
County—Essex
Parts:
Crown Point Town
Minerva Town
Schroon Town
Ticonderoga
County—Hamilton
Parts:
Indian Lake Town
County—Saratoga
Parts:
Corinth Town
Day Town
Edinburg Town
Hadley Town
Moreau Town
County—Warren
Parts:
Warren
County—Washington
Parts:
Argyle Town
Fort Ann Town
Fort Edward Town
Kingsbury Town
Putnam Town
Low Inc—Wellsville
County—Allegany
Parts:
Alfred Town
Alma Town
Almond Town
Amity Town
Andover Town
Angelica Town
Belfast Town
Birdsall Town
Bolivar Town
Burns Town
Clarksville Town
Cuba Town
Friendship Town
Genesee Town
Grove Town
Independence Town

DENTAL: New York
Population Group Listing

Population Group

New Hudson Town
Scio Town
Ward Town
Wellsville Town
West Almond Town
Willing Town
Wirt Town
Low Inc—Westfield
County—Chautauqua
Parts:
Chautauqua Town
Clymer Town
French Creek Town
Mina Town
Ripley Town
Sherman Town
Westfield Town
Low Inc—Westside Rochester
County—Monroe
Parts:
C.T. 2
C.T. 16–17
C.T. 23–24
C.T. 27
C.T. 40–41
C.T. 62–71
C.T. 75
C.T. 87.01–87.02
C.T. 88
C.T. 94.03
C.T. 95
C.T. 96.01–96.04
Low Income—Cortland Co
County—Cortland
Parts:
Low-Income
Low Income—Dannemora
County—Clinton
Parts:
Dannemora Town
Ellenburg Town
Saranacv Town
Low Income—Ogdensburg
County—St Lawrence
Parts:
De Peyster Town
Lisbon Town
Morristown Town
Ogdensburg City
Oswegatchie Town
Waddington Town
Low Income—Tioga County
County—Tioga
Parts:
Low Income
Low-Income Groton-Moravia
County—Cayuga
Parts:
Locke Town
Moravia Town
Sempronius Town
Summerhill Town
County—Tompkins
Parts:
Groton Town
Low-Income Jefferson County
County—Jefferson
Parts:
Low-Income
MFW—Goshen/Warwick
County—Orange
Parts:

DENTAL: New York
Population Group Listing

Population Group

Goshen Town
Warwick Town
MFW—New Paltz
County—Ulster
Parts:
New Paltz
MFW—Walden
County—Orange
Parts:
Montgomery Town

DENTAL: New York
Facility Listing

Facility Name

FCI Raybrook
County—Franklin

DENTAL: North Carolina
County Listing

County Name

*Alleghany
Population Group: Low Inc—Alleghany
*Anson
*Avery
Population Group: Low Inc—Avery
*Bertie
Population Group: Low Inc—Bertie
*Bladen
Population Group: Low Inc—Bladen
Burke
Population Group: Low Inc—Burke Co
Cabarrus
Population Group: Low Inc—Cabarrus
*Caswell
Population Group: Low Inc—Caswell
Chatham
Population Group: Low Inc—Chatham
*Cherokee
Population Group: Low Inc—Cherokee
*Clay
Population Group: Low Inc—Clay
*Cleveland
Population Group: Low Income—Cleveland
*Columbus
Population Group: Low Inc—Columbus
*Craven
Population Group: Low Inc—Craven
Cumberland
Population Group: Low Inc—Cumberland Co
*Duplin
Population Group: Low Inc—Duplin
Durham
Population Group: Low Inc—Central Durham
Edgecombe
Population Group: Low Inc—Edgecombe
Franklin
Population Group: Low Inc—Franklin
Gaston
Population Group: Medicaid—Gaston Co
Guilford
Population Group: Low Inc—High Point
Population Group: Low Inc—Inner Greensboro
*Halifax
*Harnett
Population Group: Low Inc—Harnett Co
*Haywood
Population Group: Low Inc—Haywood

DENTAL: North Carolina
County Listing

County Name

*Henderson
Population Group: Low Inc/MFW—Henderson
*Hoke
Population Group: Low Inc—Hoke
*Jones
Population Group: Low Inc—Jones
*Lee
Population Group: Low Inc—Lee Co
*Lenoir
Population Group: Low Inc—Lenoir
*Macon
Population Group: Low Inc—Macon
Madison
Population Group: Low Inc—Madison
*Mitchell
Population Group: Low Inc—Mitchell
*Montgomery
Population Group: Low Inc—Montgomery
New Hanover
Population Group: Low Inc—New Hanover
*Northampton
*Pamlico
Population Group: Low Inc—Pamlico
*Person
Population Group: Low Inc—Person
Pitt
Population Group: Low Inc—Pitt
*Richmond
Population Group: Low Inc—Richmond
*Robeson
Population Group: Low Inc—Robeson
Rowan
Population Group: Low Inc—Rowan
*Sampson
Population Group: Low Inc—Sampson
*Surry
Population Group: Low Income—Surry
*Swain
Population Group: Low Inc—Swain
*Vance
Facility: FCI—Butner
*Warren
Wayne
Population Group: Low Inc—Wayne
*Wilkes
Yadkin
Population Group: Low Inc—Yadkin
*Yancey
Population Group: Low-Income —Yancey County

DENTAL: North Carolina
Population Group Listing

Population Group

Low Inc—Alleghany
County—Alleghany
Parts:
Low Income
Low Inc—Avery
County—Avery
Parts:
Low Income
Low Inc—Bertie
County—Bertie
Parts:
Low Income
Low Inc—Bladen
County—Bladen
Parts:
Low Income

DENTAL: North Carolina
Population Group Listing

Population Group

Low Inc—Burke Co
County—Burke
Parts:
Low Income
Low Inc—Cabarrus
County—Cabarrus
Parts:
C.T. 407–411
C.T. 418–421
C.T. 423–424
Low Inc—Caswell
County—Caswell
Parts:
Low Income
Low Inc—Central Durham
County—Durham
Parts:
C.T. 1.01
C.T. 2
C.T. 3.01–3.02
C.T. 4.02
C.T. 5
C.T. 8.01–8.02
C.T. 9
C.T. 10.01–10.02
C.T. 11
C.T. 12.01–12.02
C.T. 13.01
C.T. 13.03–13.04
C.T. 14
C.T. 15.01–15.02
C.T. 17.09
C.T. 18.02
Low Inc—Chatham
County—Chatham
Parts:
Low Income
Low Inc—Cherokee
County—Cherokee
Parts:
Low Income
Low Inc—Clay
County—Clay
Parts:
Low Income
Low Inc—Columbus
County—Columbus
Parts:
Low Income
Low Inc—Craven
County—Craven
Parts:
Low Income
Low Inc—Cumberland Co
County—Cumberland
Parts:
Low Inc
Low Inc—Duplin
County—Duplin
Parts:
Low Income
Low Inc—Edgecombe
County—Edgecombe
Parts:
Low Income
Low Inc—Franklin
County—Franklin
Parts:
Low Income
Low Inc—Harnett Co
County—Harnett
Parts:

DENTAL: North Carolina
Population Group Listing

Population Group

Low Income
Low Inc—Haywood
County—Haywood
Parts:
Low Income
Low Inc—High Point
County—Guilford
Parts:
C.T. 138–139
C.T. 142–143
C.T. 144.06
C.T. 145.02–145.03
C.T. 146
Low Inc—Hoke
County—Hoke
Parts:
Low Income
Low Inc—Inner Greensboro
County—Guilford
Parts:
C.T. 101
C.T. 103
C.T. 107.02
C.T. 108.01
C.T. 109–110
C.T. 111.01–111.02
C.T. 112–115
C.T. 127.05–127.07
Low Inc—Jones
County—Jones
Parts:
Low Income
Low Inc—Lee Co
County—Lee
Parts:
Low Income
Low Inc—Lenoir
County—Lenoir
Parts:
Low Income
Low Inc—Macon
County—Macon
Parts:
Low Income
Low Inc—Madison
County—Madison
Parts:
Low Income
Low Inc—Mitchell
County—Mitchell
Parts:
Low Income
Low Inc—Montgomery
County—Montgomery
Parts:
Low Income
Low Inc—New Hanover
County—New Hanover
Parts:
Low Income
Low Inc—Pamlico
County—Pamlico
Parts:
Low Income
Low Inc—Person
County—Person
Parts:
Low Income
Low Inc—Pitt
County—Pitt
Parts:
Low Income

DENTAL: North Carolina
Population Group Listing

Population Group

Low Inc—Richmond
County—Richmond
Parts:
Low Income
Low Inc—Robeson
County—Robeson
Parts:
Low Income
Low Inc—Rowan
County—Rowan
Parts:
Low Income
Low Inc—Sampson
County—Sampson
Parts:
Low Income
Low Inc—Swain
County—Swain
Parts:
Low Income
Low Inc—Wayne
County—Wayne
Parts:
Low Income
Low Inc—Yadkin
County—Yadkin
Parts:
Low Income
Low Inc/MFW—Henderson
County—Henderson
Parts:
Low Inc/MFW
Low Income—Cleveland
County—Cleveland
Parts:
Low-Income
Low Income—Surry
County—Surry
Parts:
Low-Income
Low-Income —Yancey County
County—Yancey
Parts:
Low-Income
Medicaid—Gaston Co
County—Gaston
Parts:
Medicaid

DENTAL: North Carolina
Facility Listing

Facility Name

FCI—Butner
County—Vance

DENTAL: North Dakota
County Listing

County Name

*Benson
*Billings
Burleigh
Facility: Nd State Penitentiary
Cass
Facility: Family Health Care Center
*Dunn
*Golden Valley
*Griggs
Service Area: Griggs/Steele
*Kidder
*McIntosh

DENTAL: North Dakota
County Listing

County Name

*McKenzie
*Nelson
*Rolette
*Sioux
*Slope
*Steele
Service Area: Griggs/Steele
*Towner

DENTAL: North Dakota
Service Area Listing

Service Area Name

Griggs/Steele
County—Griggs
County—Steele

DENTAL: North Dakota
Facility Listing

Facility Name

Family Health Care Center
County—Cass
Nd State Penitentiary
County—Burleigh

DENTAL: Ohio
County Listing

County Name

*Adams
Population Group: Low Inc—Adams Co
*Ashland
Population Group: Low Inc—Ashland Co
*Athens
*Brown
Population Group: Low Inc—Brown Co
Clark
Population Group: Low Inc—SW Springfield City
Columbiana
Population Group: Low Inc—Columbiana Co
Cuyahoga
Service Area: Corlett/Mt. Pleas/Wdland
Service Area: Glenville (Area I—Cleveland)
Service Area: Western Collinwood
Population Group: Low Inc—Hough/Norwood
Population Group: Low Inc—Central/Fairfax/Kinsman
Franklin
Population Group: Low Inc—Near Eastside (Columbus)
Hamilton
Population Group: Hmlss Pop—Cincinnati (S)
*Jackson
*Meigs
Montgomery
Population Group: Hmlss—Central Dayton (S)
Population Group: Low Inc—West Dayton
*Muskingum
Population Group: Low Inc—Muskingum/Perry
*Perry
Population Group: Low Inc—Muskingum/Perry
*Pike
Population Group: Low Inc—Pike Co
Richland
Population Group: Low Inc—Richland Co
*Ross
Population Group: Low Income—Ross County
*Sandusky
Population Group: Low Inc/MFW—Sandusky Co
*Scioto
Population Group: Low Inc—Scioto Co
*Seneca
Population Group: Low Inc—Seneca Co
*Vinton
Washington
Population Group: Low Inc—Washington Co

DENTAL: Ohio
Service Area Listing

Service Area Name

Corlett/Mt. Pleas/Wdland
County—Cuyahoga
Parts:
C.T. 1155
C.T. 1198–1199
C.T. 1204–1206
C.T. 1207.01–1207.02
C.T. 1208.01–1208.02
C.T. 1211–1213
C.T. 1214.01–1214.02
C.T. 1215–1216
C.T. 1275
Glenville (Area I—Cleveland)
County—Cuyahoga
Parts:
C.T. 1114.01–1114.02
C.T. 1161–1168
C.T. 1181–1185
Western Collinwood
County—Cuyahoga
Parts:
C.T. 1169
C.T. 1171.01–1171.02
C.T. 1172.01–1172.02
C.T. 1173–1175
C.T. 1179
C.T. 1261

DENTAL: Ohio
Population Group Listing

Population Group

Hmlss—Central Dayton (S)
County—Montgomery
Parts:
C.T. 15
C.T. 17
C.T. 21
Hmlss Pop—Cincinnati (S)
County—Hamilton
Parts:
C.T. 1–2
C.T. 3.01–3.02
C.T. 4
C.T. 6–23
C.T. 25–39
C.T. 41–43
C.T. 61
C.T. 64–75
C.T. 77–78
C.T. 81
C.T. 86.01
C.T. 87
C.T. 89
C.T. 91–96
C.T. 103
Low Inc—Adams Co
County—Adams
Parts:
Low Income
Low Inc—Ashland Co
County—Ashland
Parts:
Low Income
Low Inc—Brown Co
County—Brown
Parts:
Low Income
Low Inc—Central/Fairfax/Kinsman
County—Cuyahoga
Parts:
C.T. 1079
C.T. 1087–1089
C.T. 1093
C.T. 1096–1099
C.T. 1103
C.T. 1129
C.T. 1131–1139
C.T. 1141–1145
C.T. 1147–1148
Low Inc—Columbiana Co
County—Columbiana
Parts:
Low Income
Low Inc—Hough/Norwood
County—Cuyahoga
Parts:
C.T. 1112–1113
C.T. 1115–1118
C.T. 1119.01–1119.02
C.T. 1121–1128
C.T. 1186.01–1186.02
C.T. 1189
Low Inc—Muskingum/Perry
County—Muskingum
Parts:
Low Income
County—Perry
Parts:
Low Income
Low Inc—Near Eastside (Columbus)
County—Franklin
Parts:
C.T. 25.20
C.T. 28–29
C.T. 36–38
C.T. 53
C.T. 54.10
Low Inc—Pike Co
County—Pike
Parts:
Low Income
Low Inc—Richland Co
County—Richland
Parts:
Low Income
Low Inc—Scioto Co
County—Scioto
Parts:
Low Income
Low Inc—Seneca Co
County—Seneca
Parts:
Low Income

DENTAL: Ohio
Population Group Listing

Population Group

Low Inc—SW Springfield City
County—Clark
Parts:
C.T. 1–3
C.T. 9.02
C.T. 10
C.T. 11.01–11.02
C.T. 12
Low Inc—Washington Co
County—Washington
Parts:
Low Income
Low Inc—West Dayton
County—Montgomery
Parts:
C.T. 2–4
C.T. 7
C.T. 10
C.T. 35–45
Low Inc/MFW—Sandusky Co
County—Sandusky
Parts:
Low Income
MFW
Low Income—Ross County
County—Ross
Parts:
Low Income

DENTAL: Oklahoma
County Listing

County Name

*Caddo
Canadian
Facility: FCI El Reno
*Coal
Creek
*Haskell
*Le Flore
Service Area: Talihina
*McCurtain
Oklahoma
Service Area: Northeast Oklahoma City
Population Group: Low Inc—SE Oklahoma City
Osage
Pottawatomie
Service Area: Konawa
*Pushmataha
Service Area: Talihina
*Seminole
Service Area: Konawa
*Tillman
Tulsa
Service Area: North Tulsa

DENTAL: Oklahoma
Service Area Listing

Service Area Name

Konawa
County—Pottawatomie
Parts:
Maud Division
Wanette-Asher Division
County—Seminole
Parts:
Konawa Division
Seminole South Division
North Tulsa
County—Tulsa

DENTAL: Oklahoma
Service Area Listing

Service Area Name

Parts:
C.T. 2–10
C.T. 12–14
C.T. 22–23
C.T. 25–26
C.T. 57
C.T. 62
C.T. 79
C.T. 80.01–80.02
C.T. 91.01–91.02
Northeast Oklahoma City
County—Oklahoma
Parts:
C.T. 1080.03
C.T. 1080.05
C.T. 1080.10–1080.11
C.T. 1081.01
C.T. 1088.01–1088.04
C.T. 1089–1090
Talihina
County—Le Flore
Parts:
South Le Flore Division
Talihina Division
County—Pushmataha
Parts:
North Pushmataha Division

DENTAL: Oklahoma
Population Group Listing

Population Group

Low Inc—SE Oklahoma City
County—Oklahoma
Parts:
Low-Income

DENTAL: Oklahoma
Facility Listing

Facility Name

FCI El Reno
County—Canadian

DENTAL: Oregon
County Listing

County Name

Clackamas
Population Group: Low Inc/MFW/Homeless—Clackamas Co
*Gilliam
*Harney
Population Group: Low Inc—Harney Co
*Hood River
Population Group: Low Inc/MFW—Hood River Co
Jackson
Population Group: Low-Inc/MFW—Jackson Co
*Josephine
Population Group: Low Income—Josephine County
*Klamath
Population Group: Low Inc/MFW/Homeless—Klamath Co
Lane
Population Group: Low Inc—Lane Co
*Malheur
Population Group: Low Inc/MFW—Malheur Co
Facility: Snake River Correct Inst

DENTAL: Oregon
County Listing

County Name

Marion
Population Group: Low Inc/MFW/Homeless—Polk And Marion C
*Morrow
Multnomah
Population Group: Low Inc—Inner NE Multnomah Co
Population Group: Low Inc—Southeast Multnoma County
Population Group: Low Inc—Mid-County Multnomah
Polk
Population Group: Low Inc/MFW/Homeless—Polk And Marion C
*Sherman
*Tillamook
*Umatilla
Population Group: Low Inc/MFW—Umatilla Co
*Wasco
Population Group: Low Inc/MFW—Wasco Co
Washington
Population Group: Low Inc/MFW—Western Washington Co
*Wheeler
Yamhill
Population Group: Low Inc—Yamhill
Facility: FCI Sheridan

DENTAL: Oregon
Population Group Listing

Population Group

Low Inc—Harney Co
County—Harney
Low Inc—Inner NE Multnomah Co
County—Multnomah
Parts:
C.T 27.02
C.T. 22.01–22.02
C.T. 23.01–23.02
C.T. 24.01–4.02
C.T. 25.01–25.02
C.T. 26
C.T. 27.01–27.02
C.T. 28.01–28.02
C.T. 29.01–29.02
C.T. 30–32
C.T. 33.01–33.02
C.T. 34.01–34.02
C.T. 35.01–35.02
C.T. 36.01–36.03
C.T. 37.01–37.02
C.T. 38.01–38.03
C.T. 39.01–39.02
C.T. 40.01–40.02
C.T. 41.01–41.02
C.T. 72.01–72.02
C.T. 73–76
Low Inc—Lane Co
County—Lane
Parts:
Low Income
Low Inc—Mid-County Multnomah
County—Multnomah
Parts:
C.T. 6.01–6.02
C.T. 16.02
C.T. 17.02
C.T. 29.03
C.T. 77–79

DENTAL: Oregon
Population Group Listing

Population Group

C.T. 80.01–80.02
C.T. 92.01–92.02
C.T. 93–95
C.T. 97.01
81
82.01
82.02
83.01
83.02
84
85
89
90
91
Low Inc—Southeast Multnoma County
County—Multnomah
Parts:
C.T. 1–2
C.T. 3.01–3.02
C.T. 4.01–4.02
C.T. 5.01–5.02
C.T. 7.01–7.02
C.T. 8.01–8.02
C.T. 9.01–9.02
C.T. 10
C.T. 11.01–11.02
C.T. 12.01–12.02
C.T. 13.01–13.02
C.T. 14–15
C.T. 16.01
C.T. 17.01
C.T. 18.01–18.02
C.T. 19–21
C.T. 86–88
Low Inc—Yamhill
County—Yamhill
Parts:
Low Income/MFW
Low Inc/MFW—Hood River Co
County—Hood River
Parts:
Low Income
MFW
Low Inc/MFW—Malheur Co
County—Malheur
Parts:
Low Inc/MFW
Low Inc/MFW—Umatilla Co
County—Umatilla
Parts:
Low Income
Migrant Farmworker
Low Inc/MFW—Wasco Co
County—Wasco
Parts:
Low Income
MFW
Low Inc/MFW—Western Washington Co
County—Washington
Parts:
Chehalem Mountain Div
Coast Range Div
Forest Grove-Cornelius
North Plains Div
Low Inc/MFW/Homeless —Clackamas Co
County—Clackamas
Parts:
Low Inc/Homeless
MFW
Low Inc/MFW/Homeless—Klamath Co
County—Klamath
Parts:

DENTAL: Oregon
Population Group Listing

Population Group

Low Income/MFW/Homeless
Low Inc/MFW/Homeless—Polk And Marion C
County—Marion
Parts:
Low Inc/MFW/Homeless
County—Polk
Parts:
Low Inc/MFW/Homeless
Low Income—Josephine County
County—Josephine
Parts:
Low-Income
Low-Inc/MFW—Jackson Co
County—Jackson
Parts:
Low Inc/MFW—Jackson Co

DENTAL: Oregon
Facility Listing

Facility Name

FCI Sheridan
County—Yamhill
Snake River Correct Inst
County—Malheur

DENTAL: Pennsylvania
County Listing

County Name

Allegheny
Service Area: Homewood-Brushton
Service Area: North Braddock
Service Area: South Braddock
Service Area: Wilkinsburg
Population Group: Low Inc—East End Pittsburgh
*Armstrong
Population Group: Low Inc—Kittanning
Population Group: Low Inc—Armstrong/Clarion
Beaver
Population Group: Low Inc—Beaver Co
*Bedford
Population Group: Low Inc—Bedford Co
Butler
Population Group: Low-Inc Pop Of Butler Co
Cambria
Service Area: Coalport
Population Group: Low Inc—Greater Johnstown
*Cameron
*Clarion
Population Group: Low Inc—Armstrong/Clarion
*Clearfield
Service Area: Coalport
Columbia
Population Group: Low Income—Bloomsburg
*Crawford
Population Group: Low Inc—Titusville
Population Group: Low Inc—Meadville/Conneautville
Population Group: Low Inc—Greenville
Dauphin
Population Group: Low Inc—Harrisburg
*Elk
Service Area: Marienville Service Area
Population Group: Low Inc—St Mary's
Erie

DENTAL: Pennsylvania
County Listing

County Name

Population Group: Low Inc—Erie City
Fayette
Population Group: Low Inc—Greensboro
Population Group: Low Inc—Uniontown
*Forest
Service Area: Marienville Service Area
Population Group: Low Inc—Titusville
*Franklin
Population Group: Low Inc/MFW—Chambersburg
*Fulton
Population Group: Low Inc.—Fulton County
*Greene
Population Group: Low Inc—Greensboro
*Huntingdon
Population Group: Low Inc—Huntingdon Co
*Jefferson
Population Group: Low Inc—Jefferson County
*Juniata
Population Group: Low Inc—Juniata
Lackawanna
Population Group: Low Income—City Of Scranton
Lancaster
Service Area: SE Lancaster City
Population Group: Low Inc—Welsh Mountain
Lycoming
Population Group: Low Inc—Williamsport
*McKean
Service Area: Coudersport
Population Group: Low Income—Western Mckean Co
Facility: FCI Mckean
Mercer
Population Group: Low Inc—Sharon/Farrell
Population Group: Low Inc—Greenville
*Mifflin
Population Group: Low Inc—Mifflin Co
*Montour
Population Group: Low Income—Bloomsburg
Northampton
Population Group: Low Inc—South Side Bethlehem
*Northumberland
Population Group: Low Inc Northumberland
Philadelphia
Population Group: Low Inc—NE Philadelphia
Population Group: Low Inc—Lower North Philadelphia
*Pike
Population Group: Low Inc—Pike County
*Potter
*Potter
Service Area: Coudersport
Service Area: Coudersport
*Schuylkill
Population Group: Low Inc—Schuylkill
Facility: FCI—Schuylkill
*Tioga
Population Group: Low-Income Tioga County
*Union
Facility: FCI Allenwood
Facility: USP—Lewisburg
Facility: USP Allenwood
*Venango

DENTAL: Pennsylvania
County Listing

County Name

Population Group: Low Inc—Titusville
*Warren
Service Area: Marienville Service Area
Population Group: Low Inc—Titusville
*Wayne
Population Group: Low Inc—Wayne Co.
York
Population Group: Low Inc—York City

DENTAL: Pennsylvania
Service Area Listing

Service Area Name

Coalport
County—Cambria
Parts:
Reade Township
White Township
County—Clearfield
Parts:
Beccaria Township
Bigler Township
Coalport Borough
Glen Hope Borough
Gulich Township
Irvona Borough
Jordan Township
Ramey Borough
Coudersport
County—McKean
Parts:
Annin Township
Ceres Township
Keating Township
Liberty Township
Norwich Township
Port Allegany Borough
Sergeant Township
Smethport Borough
County—Potter
County—Potter
Homewood-Brushton
County—Allegheny
Parts:
C.T. 1204
C.T. 1207
C.T. 1301–1305
C.T. 1305
Marienville Service Area
County—Elk
Parts:
Highland Township
Millstone Township
Spring Creek Township
County—Forest
Parts:
Barnett Township
Green Township
Hickory Township
Howe Township
Jenks Township
Kingsley Township
County—Warren
Parts:
Cherry Grove Township
Limestone Township
Sheffield Township
Watson Township
North Braddock
County—Allegheny
Parts:
C.T. 5041

DENTAL: Pennsylvania
Service Area Listing

Service Area Name

C.T. 5100
C.T. 5120
C.T. 5128–5129
C.T. 5138
C.T. 5140
South Braddock
County—Allegheny
Parts:
C.T. 4824
C.T. 4838
C.T. 4843
C.T. 4850
C.T. 4867–4869
C.T. 4882
SE Lancaster City
County—Lancaster
Parts:
C.T. 1
C.T. 7–9
C.T. 14–16
Wilkinsburg
County—Allegheny
Parts:
Wilkinsburg Borough

DENTAL: Pennsylvania
Population Group Listing

Population Group

Low Inc—Armstrong/Clarion
County—Armstrong
Parts:
Brady's Bend Twp
Hovey Twp
Madison Twp
Mahoning Twp
Parker City
Perry Twp
Pine Twp
Redbank Twp
S.Bethlehem Boro
Sugarcreek Twp
Washington Twp
County—Clarion
Parts:
Brady Twp
Callensburg Boro
East Brady Boro
Hawthorn Boro
Licking Twp
Limestone Twp
Madison Twp
Monroe Twp
New Bethlehem Boro
Perry Twp
Piney Twp
Porter Twp
Redbank Twp
Rimersburg Boro
Sligo Boro
Toby Twp
Low Inc—Beaver Co
County—Beaver
Parts:
Low Income
Low Inc—Bedford Co
County—Bedford
Parts:
Low Income
Low Inc—East End Pittsburgh
County—Allegheny
Parts:

DENTAL: Pennsylvania
Population Group Listing

Population Group

C.T. 818
C.T. 1016–1017
C.T. 1113–1115
C.T. 1201–1204
C.T. 1208
Low Inc—Erie City
County—Erie
Parts:
C.T. 1–8
C.T. 10–16
C.T. 16–30
Low Inc—Greater Johnstown
County—Cambria
Parts:
C.T. 1–14
C.T. 101–114
Low Inc—Greensboro
County—Fayette
Parts:
German Twp
Masontown Boro
Nicholson Twp
Point Marion Boro
Springhill Twp
County—Greene
Parts:
Low Income
Low Inc—Greenville
County—Crawford
Parts:
East Fallowfield Twp
Greenwood Twp
N.Shenango Twp
S.Shenango Twp
W.Fallowfield Twp
W.Shenango Twp
County—Mercer
Parts:
Deer Creek Twp
Delaware Twp
Fredonia Boro
French Creek Twp
Greene Twp
Greenville Boro
Hempfield Twp
Jamestown Boro
Mill Creek Twp
New Lebanon Boroa
New Vernon Twp
Otter Creek Twp
Perry Twp
Pymatuning Twp
S.Pymatuning Twp
Salem Twp
Sandy Creek Twp
Sandy Lake Boro
Sandy Lake Twp
Sheakleyville Boro
Stoneboro Boro
Sugar Grove Twp
W.Salem Twp
Low Inc—Harrisburg
County—Dauphin
Parts:
C.T. 201–217
Low Inc—Huntingdon Co
County—Huntingdon
Parts:
Low Income
Low Inc—Jefferson County
County—Jefferson
Parts:

DENTAL: Pennsylvania
Population Group Listing

Population Group

Low Income
Low Inc—Juniata
County—Juniata
Parts:
Low Income
Low Inc—Kittanning
County—Armstrong
Parts:
Apollo Boro
Applewood Boro
Atwood Boro
Bethel Twp
Boggs Twp
Burrell Twp
Cadogan Twp
Cowanshannock Twp
Dayton Boro
E.Franklin Twp
Elderton Boro
Ford City Boro
Ford Cliff Boro
Freeport Boro
Gilpin Twp
Kiskiminetas Twp
Kittanning Boro
Kittanning Twp
Leechburg Boro
Manor Twp
Manorville Boro
N.Apollo Boro
N.Buffalo Twp
Parks Twp
Plumcreek Twp
Rayburn Twp
Rural Valley Boro
S.Bend Twp
S.Bethlehem Boro
S.Buffalo Twp
Valley Twp
W. Franklin Twp
W.Kittanning Boro
Wayne Twp
Worthington Boro
Low Inc—Lower North Philadelphia
County—Philadelphia
Parts:
C.T. 125–181
C.T. 192
C.T. 194–205
C.T. 280
C.T. 283–287
Low Inc—Meadville/Conneautville
County—Crawford
Parts:
Beaver Twp
Conneaut Twp
Conneaut Lake Boro
Conneautville Boro
Cussewago Twp
Hayfield Twp
Meadville City
Pine Twp
Sadsbury Twp
Saegertown Boro
Spring Twp
Springboro Boro
Summerhill Twp
Summit Twp
Union Twp
Vernon Twp
West Mead Twp
Low Inc—Mifflin Co

DENTAL: Pennsylvania
Population Group Listing

Population Group

County—Mifflin
Parts:
Low Income
Low Inc—NE Philadelphia
County—Philadelphia
Parts:
C.T. 182–185
C.T. 189–191
C.T. 193
C.T. 288–328
Low Inc—Pike County
County—Pike
Parts:
Pike County
Low Inc—Schuylkill
County—Schuylkill
Parts:
Low Income
Low Inc—Sharon/Farrell
County—Mercer
Parts:
C.T. 301–309
Low Inc—South Side Bethlehem
County—Northampton
Parts:
C.T. 105–106
C.T. 109–113
Low Inc—St Mary's
County—Elk
Parts:
Benezette Twp
Benzinger Twp
Fox Twp
Horton Twp
Jay Twp
Johnsonburg Boro
Jones Twp
Ridgway Boro
Ridgway Twp
St. Marys Boro
Low Inc—Titusville
County—Crawford
Parts:
Centerville Borough
Hydetown Borough
Oil Creek Borough
Rome Township
Sparta Township
Spartansburg Borough
Steuben Township
Titusville City
Townville Borough
Troy Township
County—Forest
Parts:
Harmony Township
Tionesta Borough
Tionesta Township
County—Venango
Parts:
Allegheny Township
Cherrytree Township
Cooperstown Borough
Cornplanter Township
Jackson Township
Oakland Township
Oilcreek Township
Pleasantville Borough
Plum Township
Rouseville Borough
County—Warren
Parts:

DENTAL: Pennsylvania
Population Group Listing

Population Group

Deerfield Township
Eldred Township
Southwest Township
Tidioute Borough
Triumph Township
Low Inc—Uniontown
County—Fayette
Parts:
Belle Vernon Borough
Brownsville Borough
Brownsville Township
Bullskin Township
Connellsville City
Connellsville Township
Dawson Borough
Dunbar Borough
Everson Borough
Fairchance Borough
Fayette City Borough
Franklin Township
Georges Township
Henry Clay Township
Jefferson Township
Lower Tyrone Township
Luzern Township
Markleysburg Borough
Menallen Township
Newell Borough
North Union Township
Perry Township
Perryopolis Borough
Redstone Township
Saltlick Township
Smithfield Borough
South Connellsville Boro
South Union Township
Springfield Township
Stewart Township
Uniontown City
Upper Tyrone Township
Vanderbilt Borough
Washington Township
Wharton Township
Low Inc—Wayne Co.
County—Wayne
Parts:
Low Income
Low Inc—Welsh Mountain
County—Lancaster
Parts:
Bart Township
Brecknock Township
Caernarvon Township
Christiana Borough
Colerain Township
Earl Township
East Earl Township
Eden Township
Leacock Township
Little Britain Township
New Holland Borough
Paradise Township
Quarryville Borough
Sadsbury Township
Salisbury Township
Terre Hill Borough
Low Inc—Williamsport
County—Lycoming
Parts:
Armstrong Twp
Brady Twp
Clinton Twp

DENTAL: Pennsylvania
Population Group Listing

Population Group

Duboistown Boro
Elred Twp
Fairfield Twp
Franklin Twp
Hepburn Twp
Hughesville Boro
Jordan Twp
Loyalsock Twp
Montgomery Boro
Montoursville Boro
Moreland Twp
Muncy Boro
Muncy Creek Twp
Muncy Twp
Penn Twp
Picture Rocks Boro
S. Williamsport Boro
Shrewsbury Twp
Upper Fairfield Twp
Williamsport City
Wolf Twp
Low Inc—York City
County—York
Parts:
C.T. 1–3
C.T. 5–7
C.T. 9–12
C.T. 15–16
Low Inc Northumberland
County—Northumberland
Parts:
Low Income
Low Inc.—Fulton County
County—Fulton
Parts:
Low Income
Low Inc/MFW—Chambersburg
County—Franklin
Parts:
Chambersburg Boro
Hamilton Twp
Letterkenny Twp
St. Thomas Twp
Low Income—Bloomsburg
County—Columbia
Parts:
Low Income
County—Montour
Parts:
Low Income
Low Income—City Of Scranton
County—Lackawanna
Parts:
Low Income
Low Income—Western Mckean Co
County—McKean
Parts:
Bradford City
Bradford Twp
Corydon Twp
Eldred Boro
Eldred Twp
Foster Twp
Hamilton Twp
Hamlin Twp
Kane Boro
Lafayette Twp
Lewis Run Boro
Mt Jewett Boro
Otto Twp
Wetmore Twp
Low-Inc Pop Of Butler Co

DENTAL: Pennsylvania
Population Group Listing

Population Group

County—Butler
Parts:
Allegheny Twp
Brady Twp
Bruin Boro
Butler City
Butler Twp
Center Twp
Cherry Twp
Cherry Valley Boro
Chicora Boro
Clay Twp
Clearfield Twp
Concord Twp
Connequenessing Boro
Connoquenessing Twp
Donegal Twp
East Butler Boro
Eau Claire Boro
Fairview Boro
Fairview Twp
Franklin Twp
Harrisville Boro
Karns City Boro
Lancaster Twp
Marion Twp
Mercer Twp
Muddy Creek Twp
Oakland Twp
Parker Twp
Petrolia Boro
Portersville Boro
Prospect Boro
Slippery Rock Boro
Slippery Rock Twp
Summit Twp
Venango Twp
Washington Twp
West Liberty Boro
West Sunbury Boro
Worth Twp
Low-Income Tioga County
County—Tioga
Parts:
Low-Income

DENTAL: Pennsylvania
Facility Listing

Facility Name

FCI—Schuylkill
County—Schuylkill
FCI Allenwood
County—Union
FCI Mckean
County—McKean
USP—Lewisburg
County—Union
USP Allenwood
County—Union

DENTAL: Rhode Island
County Listing

County Name

Newport
Population Group: Newport/Middletown Low Income
Providence
Population Group: Low Inc—NW Woonsocket
Population Group: Low Inc—Providence City

DENTAL: Rhode Island
County Listing

County Name

Population Group: Low Inc—C Falls/N Pawtucket
Washington
Population Group: Narranganset Indian Tribe
Facility: Health Center Of South County
Facility: Wood River Health Services

DENTAL: Rhode Island
Population Group Listing

Population Group

Low Inc—C Falls/N Pawtucket
County—Providence
Parts:
C.T. 109–111
C.T. 149–161
C.T. 163–166
C.T. 167.97–167.98
C.T. 168–170
C.T. 170–171
Low Inc—NW Woonsocket
County—Providence
Parts:
Burrillville Town
Foster Town
Glocester Town
North Smithfield Town
Woonsocket City
Low Inc—Providence City
County—Providence
Parts:
C.T. 1–9
C.T. 9–34
C.T. 36–37
Narranganset Indian Tribe
County—Washington
Parts:
Charlestown Town
Newport/Middletown Low Income
County—Newport
Parts:
C.T. 402
C.T. 403.03
C.T. 405–408
C.T. 410
C.T. 412

DENTAL: Rhode Island
Facility Listing

Facility Name

Health Center Of South County
County—Washington
Wood River Health Services
County—Washington

DENTAL: South Carolina
County Listing

County Name

*Abbeville
Population Group: Low Inc—Abbeville/Greenwood/Mccormick
Aiken
Population Group: Low Inc—Aiken
*Allendale
Population Group: Low Inc—Allendale/Hampton
Anderson
Population Group: Low Inc—Anderson
*Bamberg

DENTAL: South Carolina
County Listing

County Name

Population Group: Low Inc—Bamberg/Calhoun/Orangeburg
*Barnwell
Population Group: Low Inc—Barwell
*Beaufort
Population Group: Low Inc—Beaufort
Berkeley
Population Group: Low Inc—Berkeley
*Calhoun
Population Group: Low Inc—Bamberg/Calhoun/Orangeburg
Charleston
Population Group: Low Inc—Charleston/Dorchester
Cherokee
*Chester
Population Group: Low Inc—Chester/York
*Chesterfield
Population Group: Low Inc—Chesterfield
*Clarendon
*Colleton
*Darlington
Population Group: Low Inc—Darlington
*Dillon
Service Area: Dillon/Marion
Dorchester
Population Group: Low Inc—Charleston/Dorchester
Edgefield
Population Group: Low Inc—Edgefield
*Fairfield
Population Group: Low Inc—Fairfield
Florence
Population Group: Low Inc—Florence
*Georgetown
Population Group: Low Inc—Georgetown
*Greenwood
Population Group: Low Inc—Abbeville/Greenwood/Mccormick
*Hampton
Population Group: Low Inc—Allendale/Hampton
Facility: FCI Estill
Horry
Population Group: Low Inc—Horry
*Jasper
Population Group: Low Inc—Jasper
Facility: Ridgeland Ci
*Kershaw
Population Group: Low Inc—Kershaw
*Lancaster
Population Group: Low Inc—Lancaster
*Laurens
*Lee
*Marion
Service Area: Dillon/Marion
*Marlboro
Population Group: Low Inc—Marlboro
*McCormick
Population Group: Low Inc—Abbeville/Greenwood/Mccormick
*Oconee
Population Group: Low Inc—Oconee
*Orangeburg
Population Group: Low Inc—Bamberg/Calhoun/Orangeburg
Pickens
Population Group: Low Inc—Pickens
Spartanburg
Population Group: Low Inc—Spartanburg
Sumter
*Union

DENTAL: South Carolina
County Listing

County Name

Population Group: Low Inc—Union
*Williamsburg
York
Population Group: Low Inc—Chester/York

DENTAL: South Carolina
Service Area Listing

Service Area Name

Dillon/Marion
County—Dillon
County—Marion

DENTAL: South Carolina
Population Group Listing

Population Group

Low Inc—Abbeville/Greenwood/Mccormick
County—Abbeville
Parts:
Low Income
County—Greenwood
Parts:
Low Income
County—McCormick
Parts:
Low Income
Low Inc—Aiken
County—Aiken
Parts:
Low Income
Low Inc—Allendale/Hampton
County—Allendale
Parts:
Low Income
County—Hampton
Parts:
Low Income
Low Inc—Anderson
County—Anderson
Parts:
Low Income
Low Inc—Bamberg/Calhoun/Orangeburg
County—Bamberg
Parts:
Low Income
County—Calhoun
Parts:
Low Income
County—Orangeburg
Parts:
Low Income
Low Inc—Barwell
County—Barnwell
Parts:
Low Income
Low Inc—Beaufort
County—Beaufort
Parts:
Low Income
Low Inc—Berkeley
County—Berkeley
Parts:
Low Income
Low Inc—Charleston/Dorchester
County—Charleston
Parts:
Low Income
County—Dorchester
Parts:
Low Income
Low Inc—Chester/York

DENTAL: South Carolina
Population Group Listing

Population Group

County—Chester
Parts:
Low Income
County—York
Parts:
Low Income
Low Inc—Chesterfield
County—Chesterfield
Parts:
Low Income
Low Inc—Darlington
County—Darlington
Parts:
Low Income
Low Inc—Edgefield
County—Edgefield
Parts:
Low Income
Low Inc—Fairfield
County—Fairfield
Parts:
Low Income
Low Inc—Florence
County—Florence
Parts:
Low Income
Low Inc—Georgetown
County—Georgetown
Parts:
Low Income
Low Inc—Horry
County—Horry
Parts:
Low Income
Low Inc—Jasper
County—Jasper
Parts:
Low Income
Low Inc—Kershaw
County—Kershaw
Parts:
Low Income
Low Inc—Lancaster
County—Lancaster
Parts:
Low Income
Low Inc—Marlboro
County—Marlboro
Parts:
Low Income
Low Inc—Oconee
County—Oconee
Parts:
Low Income
Low Inc—Pickens
County—Pickens
Parts:
Low Income
Low Inc—Spartanburg
County—Spartanburg
Parts:
Low Income
Low Inc—Union
County—Union
Parts:
Low Income

DENTAL: South Carolina
Facility Listing

Facility Name

FCI Estill

DENTAL: South Carolina
Facility Listing

Facility Name

County—Hampton
Ridgeland Ci
County—Jasper

DENTAL: South Dakota
County Listing

County Name

*Bennett
*Corson
*Dewey
*Gregory
*Harding
*Lyman
*McCook
*Meade
Service Area: Faith
Minnehaha
Population Group: Low Inc—Central Sioux Falls
*Perkins
*Roberts
*Shannon
Population Group: Low Income—Shannon
*Todd
*Turner
*Ziebach

DENTAL: South Dakota
Service Area Listing

Service Area Name

Faith
County—Meade
Parts:
Eagle Township
Faith City
Howard Township
North Meade Unorg.
Union Township
Upper Red Owl Township

DENTAL: South Dakota
Population Group Listing

Population Group

Low Inc—Central Sioux Falls
County—Minnehaha
Parts:
C.T. 1–2
C.T. 7–9
Low Income—Shannon
County—Shannon
Parts:
Low Income

DENTAL: Tennessee
County Listing

County Name

Anderson
Population Group: Low Inc—Anderson Co
*Bedford
Population Group: Low Inc—Bedford
*Benton
Population Group: Low Inc—Benton Co
*Bledsoe
Blount
Population Group: Low Inc—Blount Co
*Bradley
Population Group: Low Inc—Bradley Co
*Campbell

DENTAL: Tennessee
County Listing

County Name

*Carroll
Population Group: Low Inc—Carroll Co
Carter
Population Group: Low Inc—Carter Co
Cheatham
Population Group: Low Inc—Cheatham
*Chester
Population Group: Low Inc—Chester Co
*Claiborne
*Clay
Population Group: Low Inc—Clay
*Cocke
Population Group: Low Inc—Cocke
*Coffee
Population Group: Low Inc—Coffee Co
*Crockett
Population Group: Low Inc—Crockett Co
*Cumberland
Population Group: Low Inc—Cumberland
Davidson
Population Group: Low Inc—E Nashville
Population Group: Low Inc Pop—Waverly-Belmont
Population Group: Low Inc/Homeless—N Nashville
*De Kalb
Population Group: Low Inc—Dekalb
*Decatur
Population Group: Low Inc—Decatur Co
Dickson
Population Group: Low Inc—Dickson
*Dyer
Population Group: Low Inc—Dyer Co
Fayette
Population Group: Low Income—Fayette County
*Fentress
Population Group: Low Inc—Fentress
*Franklin
Population Group: Low Inc—Franklin Co
*Gibson
Population Group: Low Inc—Gibson Co
*Giles
Population Group: Low Inc—Giles Co
Grainger
*Greene
Population Group: Low Inc—Greene Co
*Grundy
*Hamblen
Population Group: Low Inc—Hamblen Co
Hamilton
Population Group: Low Inc—Central Chattanooga
Facility: Woods Clinic
*Hancock
*Hardeman
Population Group: Low Inc—Hardeman Co
*Hardin
Population Group: Low Inc—Hardin Co
Hawkins
Population Group: Low Inc—Hawkins Co
*Haywood
Population Group: Low Inc—Haywood
*Henderson
Population Group: Low Inc—Henderson Co
*Henry
Population Group: Low Inc—Henry Co
*Hickman
Population Group: Low Inc—Hickman Co
*Houston
Population Group: Low Inc—Houston
*Humphreys

DENTAL: Tennessee
County Listing

County Name

Population Group: Low Inc—Humphreys
*Jackson
Population Group: Low Inc—Jackson Co
Jefferson
Population Group: Low Inc—Jefferson Co
*Johnson
Knox
Population Group: Low Inc—Knoxville
*Lake
*Lauderdale
Population Group: Low Inc—Lauderdale Co
*Lawrence
Population Group: Low Inc—Lawrence Co
*Lewis
Population Group: Low Inc—Lewis Co
*Lincoln
Population Group: Low Inc—Lincoln Co
Loudon
Population Group: Low Inc—Loudon Co
*Macon
Madison
Population Group: Low Inc—Madison Co
Marion
Population Group: Low Inc—Marion Co
*Marshall
Population Group: Low Inc—Marshall Co
*Maury
Population Group: Low Inc—Maury Co
*McMinn
Population Group: Low Inc—Mcminn Co
*McNairy
Population Group: Low Inc—Mcnairy Co
*Meigs
*Monroe
Population Group: Low Inc—Monroe Co
Montgomery
Population Group: Low Inc—Montgomery
*Moore
Population Group: Low Inc—Moore Co
*Morgan
*Obion
Population Group: Low Inc—Obion Co
*Overton
Population Group: Low Inc—Overton
*Perry
Population Group: Low Inc—Perry Co
*Pickett
*Polk
Population Group: Low Inc—Polk Co
*Putnam
Population Group: Low Inc—Putnam
*Rhea
Population Group: Low Inc—Rhea Co
*Roane
Population Group: Low Inc—Roane Co
Robertson
Population Group: Low Inc—Robertson
*Scott
Population Group: Low Income—Scott Co
*Sequatchie
Population Group: Low Inc—Sequatchie Co
Sevier
Population Group: Low Inc—Sevier Co
Shelby
Population Group: Low Inc—Shelby
Facility: FCI Memphis
*Smith
Population Group: Low Inc—Smith
*Stewart
Population Group: Low Inc—Stewart

DENTAL: Tennessee
County Listing

County Name

Sumner
Population Group: Low Inc—Highland Ridge
Tipton
Population Group: Low Inc—Tipton Co
*Trousdale
Population Group: Low Inc—Trousdale
Unicoi
Population Group: Low Inc—Unicoi Co
Union
*Van Buren
Population Group: Low Inc—Van Buren
*Warren
Population Group: Low Inc—Warren
Washington
Population Group: Low Inc—Washington Co
*Weakley
Population Group: Low Inc—Weakley Co
*White
Population Group: Low Inc—White

DENTAL: Tennessee
Population Group Listing

Population Group

Low Inc—Anderson Co
County—Anderson
Parts:
Low Income
Low Inc—Bedford
County—Bedford
Parts:
Low Income
Low Inc—Benton Co
County—Benton
Parts:
Low Income
Low Inc—Blount Co
County—Blount
Parts:
Low Income
Low Inc—Bradley Co
County—Bradley
Parts:
Low Inc Pop
Low Inc—Carroll Co
County—Carroll
Parts:
Low Income
Low Inc—Carter Co
County—Carter
Parts:
Low Income
Low Inc—Central Chattanooga
County—Hamilton
Parts:
C.T. 1–8
C.T. 10–16
C.T. 18–21
C.T. 23–27
C.T. 31
C.T. 115
Low Inc—Cheatham
County—Cheatham
Parts:
Low Income
Low Inc—Chester Co
County—Chester
Parts:
Low Income
Low Inc—Clay

DENTAL: Tennessee
Population Group Listing

Population Group

County—Clay
Parts:
Low Income
Low Inc—Cocke
County—Cocke
Parts:
Low Income
Low Inc—Coffee Co
County—Coffee
Parts:
Low Income
Low Inc—Crockett Co
County—Crockett
Parts:
Low Income
Low Inc—Cumberland
County—Cumberland
Parts:
Low Income
Low Inc—Decatur Co
County—Decatur
Parts:
Low Income
Low Inc—Dekalb
County—De Kalb
Parts:
Low Income
Low Inc—Dickson
County—Dickson
Parts:
Low Income
Low Inc—Dyer Co
County—Dyer
Parts:
Low Income
Low Inc—E Nashville
County—Davidson
Parts:
C.T. 112–129
Low Inc—Fentress
County—Fentress
Low Inc—Franklin Co
County—Franklin
Parts:
Low Income
Low Inc—Gibson Co
County—Gibson
Parts:
Low Income
Low Inc—Giles Co
County—Giles
Parts:
Low Income
Low Inc—Greene Co
County—Greene
Parts:
Low Income
Low Inc—Hamblen Co
County—Hamblen
Parts:
Low Income
Low Inc—Hardeman Co
County—Hardeman
Parts:
Low Income
Low Inc—Hardin Co
County—Hardin
Parts:
Hardin
Low Inc—Hawkins Co
County—Hawkins
Parts:

DENTAL: Tennessee
Population Group Listing

Population Group

Low Income
Low Inc—Haywood
County—Haywood
Low Inc—Henderson Co
County—Henderson
Parts:
Low Income
Low Inc—Henry Co
County—Henry
Parts:
Low Income
Low Inc—Hickman Co
County—Hickman
Parts:
Low Income
Low Inc—Highland Ridge
County—Sumner
Parts:
Portland CCD
Westmoreland CCD
Whitehouse CCD
Low Inc—Houston
County—Houston
Parts:
Low Income
Low Inc—Humphreys
County—Humphreys
Parts:
Low Income
Low Inc—Jackson Co
County—Jackson
Parts:
Low Income
Low Inc—Jefferson Co
County—Jefferson
Parts:
Low Income
Low Inc—Knoxville
County—Knox
Parts:
C.T. 1–17
C.T. 19–20
C.T. 24
C.T. 26–28
Low Inc—Lauderdale Co
County—Lauderdale
Parts:
Low Income
Low Inc—Lawrence Co
County—Lawrence
Parts:
Low Income
Low Inc—Lewis Co
County—Lewis
Parts:
Low Income
Low Inc—Lincoln Co
County—Lincoln
Parts:
Low Income
Low Inc—Loudon Co
County—Loudon
Parts:
Low Income
Low Inc—Madison Co
County—Madison
Parts:
Low Income
Low Inc—Marion Co
County—Marion
Parts:
Low Income

DENTAL: Tennessee
Population Group Listing

Population Group

Low Inc—Marshall Co
County—Marshall
Parts:
Low Income
Low Inc—Maury Co
County—Maury
Parts:
Low Income
Low Inc—Mcminn Co
County—McMinn
Parts:
Low Income
Low Inc—Mcnairy Co
County—McNairy
Parts:
Low Income
Low Inc—Monroe Co
County—Monroe
Parts:
Low Income
Low Inc—Montgomery
County—Montgomery
Parts:
Low Income
Low Inc—Moore Co
County—Moore
Parts:
Low Income
Low Inc—Obion Co
County—Obion
Parts:
Low Income
Low Inc—Overton
County—Overton
Parts:
Low Income
Low Inc—Perry Co
County—Perry
Parts:
Low Income
Low Inc—Polk Co
County—Polk
Parts:
Low Income
Low Inc—Putnam
County—Putnam
Parts:
Low Income
Low Inc—Rhea Co
County—Rhea
Parts:
Low Income
Low Inc—Roane Co
County—Roane
Parts:
Low Income
Low Inc—Robertson
County—Robertson
Parts:
Low Income
Low Inc—Sequatchie Co
County—Sequatchie
Parts:
Low Income
Low Inc—Sevier Co
County—Sevier
Parts:
Low Income
Low Inc—Shelby
County—Shelby
Parts:
Low Income

DENTAL: Tennessee
Population Group Listing

Population Group

Low Inc—Smith
County—Smith
Parts:
Low Income
Low Inc—Stewart
County—Stewart
Parts:
Low Income
Low Inc—Tipton Co
County—Tipton
Parts:
Low Income
Low Inc—Trousdale
County—Trousdale
Parts:
Low Income
Low Inc—Unicoi Co
County—Unicoi
Parts:
Low Income
Low Inc—Van Buren
County—Van Buren
Parts:
Low Income
Low Inc—Warren
County—Warren
Low Inc—Washington Co
County—Washington
Parts:
Low Income
Low Inc—Weakley Co
County—Weakley
Parts:
Low Income
Low Inc—White
County—White
Parts:
Low Income
Low Inc Pop—Waverly-Belmont
County—Davidson
Parts:
C.T. 161–163
C.T. 170–171
Low Inc/Homeless—N Nashville
County—Davidson
Parts:
C.T. 133
C.T. 135–144
C.T. 146–148
Low Income—Fayette County
County—Fayette
Parts:
Low Income
Low Income—Scott Co
County—Scott
Parts:
Low Income

DENTAL: Tennessee
Facility Listing

Facility Name

FCI Memphis
County—Shelby
Woods Clinic
County—Hamilton

DENTAL: Texas
County Listing

County Name

*Anderson

DENTAL: Texas
County Listing

County Name

Facility: Beto Psn
Facility: Gurney Prison
*Aransas
Archer
*Armstrong
*Atascosa
Bastrop
*Bee (g)
Facility: McConnell Prsn
Bexar
Service Area: East Side (San Antonio)
Service Area: West Side (San Antonio)
Population Group: Low Inc—South Side (San Antonio)
*Borden
Bowie
Population Group: Low Inc—Comanche Co
*Briscoe
*Brooks
*Burleson
Caldwell
Cameron
*Carson
*Castro
*Cochran
*Coke
Coryell (g)
Facility: Mountain View Prison
*Crosby
*Culberson
Dallas
Service Area: Lisbon
Service Area: South Dallas
Facility: FCI Seagoville
*Dawson
*De Witt
*Dickens
*Dimmit
*Donley
*Duval
*Eastland
*Edwards
El Paso
Service Area: Southeast El Paso
*Frio
*Gaines
Galveston
Population Group: Low Inc—Galveston
*Glasscock
*Gonzales
Population Group: Low Inc—Gonzales Co
*Hale
*Hall
*Hansford
Hidalgo
*Hockley
Population Group: Low Inc—Hockley Co
*Hudspeth
Jefferson
Population Group: Low Inc—Jefferson Co
*Jim Hogg
*Jim Wells
*Kent
*King
*Kinney
*La Salle
Liberty
*Live Oak
Facility: FCI Three Rivers
*Loving
Lubbock
Service Area: East Lubbock

DENTAL: Texas
County Listing

County Name

*Maverick
*Medina
*Mitchell
*Motley
*Nacogdoches
  Population Group: Low Inc—Nacogdoches Co
*Newton
*Oldham
Orange
  Population Group: Low Inc—Orange Co
*Pecos
Potter
  Population Group: Low Inc—Potter/Randall
*Presidio
Randall
  Population Group: Low Inc—Potter/Randall
*Reeves
*Roberts
*Robertson
*San Jacinto
*Schleicher
*Shackelford
*Sherman
*Starr
*Sterling
*Stonewall
*Terrell
*Terry
*Throckmorton
Tom Green
  Population Group: Low Inc—Tom Green
Travis
  Service Area: Dove Springs
  Service Area: East Austin
  Service Area: South Austin
*Trinity
Upshur
*Uvalde
*Val Verde
*Ward
Webb
*Wharton
  Population Group: Low Inc—Wharton Co
Wichita
  Population Group: Low Income—Wichita Co
*Willacy
*Wise
*Yoakum
*Zapata
*Zavala

DENTAL: Texas
Service Area Listing

Service Area Name

Dove Springs
  County—Travis
    Parts:
      C.T. 24.11–24.13
East Austin
  County—Travis
    Parts:
      C.T. 4.02
      C.T. 8.01–8.04
      C.T. 9.01–9.02
      C.T. 10
      C.T. 18.11–18.12
      C.T. 21.04–21.13
      C.T. 22.01–22.02
      C.T. 22.05

DENTAL: Texas
Service Area Listing

Service Area Name

East Lubbock
  County—Lubbock
    Parts:
      C.T. 1
      C.T. 2.01–2.02
      C.T. 3.01–3.02
      C.T. 6.03–6.06
      C.T. 7–13
      C.T. 24–25
East Side (San Antonio)
  County—Bexar
    Parts:
      C.T. 1101–1104
      C.T. 1109–1110
      C.T. 1301–1306
      C.T. 1307.85
      C.T. 1308–1313
      C.T. 1401
Lisbon
  County—Dallas
    Parts:
      C.T. 56–57
      C.T. 59.01–59.02
      C.T. 87.01
      C.T. 87.03–87.05
      C.T. 88.01–88.02
South Austin
  County—Travis
    Parts:
      C.T. 23.04
      C.T. 23.10–23.12
      C.T. 24.16
South Dallas
  County—Dallas
    Parts:
      C.T. 25
      C.T. 27.01–27.02
      C.T. 28–29
      C.T. 33–38
      C.T. 39.01–39.02
      C.T. 40
      C.T. 93.03–93.04
      C.T. 115
      C.T. 116.01
Southeast El Paso
  County—El Paso
    Parts:
      C.T. 17–21
      C.T. 28–32
      C.T. 35–36
      C.T. 37.01–37.02
      C.T. 38.01–38.02
      C.T. 39.01–39.03
      C.T. 40.01–40.02
      C.T. 41.03–41.07
      C.T. 42.01–42.02
      C.T. 103.10
      C.T. 104.01–104.04
      C.T. 105
West Side (San Antonio)
  County—Bexar
    Parts:
      C.T. 1105–1108
      C.T. 1601–1606
      C.T. 1607.85
      C.T. 1616
      C.T. 1701–1716
      C.T. 1901–1902

DENTAL: Texas
Population Group Listing

Population Group

Low Inc—Jefferson Co 1
  County—Jefferson
    Parts:
      Low Income
Low Inc—Comanche Co
  County—Bowie
    Parts:
      Low Income
Low Inc—Galveston
  County—Galveston
    Parts:
      Low Income
Low Inc—Gonzales Co
  County—Gonzales
    Parts:
      Low Income
Low Inc—Hockley Co
  County—Hockley
    Parts:
      Low Income
Low Inc—Nacogdoches Co
  County—Nacogdoches
    Parts:
      Low Income
Low Inc—Orange Co
  County—Orange
    Parts:
      Low Income
Low Inc—Potter/Randall
  County—Potter
    Parts:
      Low Income
  County—Randall
    Parts:
      Low Income
Low Inc—South Side (San Antonio)
  County—Bexar
    Parts:
      C.T 1407.00
      C.T 1501.00
      C.T. 1402–1406
      C.T. 1408–1412
      C.T. 1416–1418
      C.T. 1502–1522
      C.T. 1609
      C.T. 1610.85
      C.T. 1611–1613
      C.T. 1615.01–1615.02
      C.T. 1618–1620
Low Inc—Tom Green
  County—Tom Green
    Parts:
      Tom Green
Low Inc—Wharton Co
  County—Wharton
    Parts:
      Low Income
Low Income—Wichita Co
  County—Wichita
    Parts:
      Low Income

DENTAL: Texas
Facility Listing

Facility Name

Beto Psn
  County—Anderson
FCI Seagoville
  County—Dallas
FCI Three Rivers
  County—Live Oak

DENTAL: Texas
Facility Listing

Facility Name

Gurney Prison
County—Anderson
McConnell Prsn
County—Bee
Mountain View Prison
County—Coryell

DENTAL: Utah
County Listing

County Name

*Beaver
Population Group: Low Inc—Beaver
*Box Elder
Population Group: Low Inc—Box Elder
*Cache
Population Group: Low Inc—Cache
*Carbon
Population Group: Low Income—Carbon County
*Daggett
Davis
Population Group: Low Inc—South Davis
Population Group: Low Inc—North Davis
*Duchesne
Population Group: Low Income—Duchesne Co
*Emery
Population Group: Low Income—Emery
*Garfield
*Grand
Population Group: Low Income—Grand County
*Iron
Population Group: Low Inc—Iron
*Juab
Population Group: Low Inc—Juab
*Kane
Population Group: Low Inc—Kane
*Millard
Population Group: Low Inc—Millard
*Morgan
Population Group: Low Income—Morgan County
*Piute
*Rich
Population Group: Low Income—Rich Co
Salt Lake
Population Group: Low Income—West Salt Lake
Facility: Utah St. Prison (Draper)
*San Juan
Population Group: Low Inc—San Juan Co
*Sanpete
Population Group: Low Inc—Sanpete
Facility: Central Utah Correctional Facility
*Sevier
Population Group: Low Inc—Sevier
*Summit
Service Area: Coalville/Kamas
*Tooele
Population Group: Low Inc—Tooele
*Uintah
Population Group: Low Income—Uintah Co
Utah
Population Group: Low Income—Utah Co
*Wasatch
Population Group: Low Inc—Wasatch
*Washington
Population Group: Low Inc—Washington
*Wayne
Population Group: Low Income—Wayne Co
Weber
Population Group: Low Inc—Weber

DENTAL: Utah
Service Area Listing

Service Area Name

Coalville/Kamas
County—Summit
Parts:
Coalville Division
Kamas Division

DENTAL: Utah
Population Group Listing

Population Group

Low Inc—Beaver
County—Beaver
Parts:
Low Income
Low Inc—Box Elder
County—Box Elder
Parts:
Low Income
Low Inc—Cache
County—Cache
Parts:
Low Income
Low Inc—Iron
County—Iron
Parts:
Low Income
Low Inc—Juab
County—Juab
Parts:
Low Income
Low Inc—Kane
County—Kane
Parts:
Low Income
Low Inc—Millard
County—Millard
Parts:
Low Income
Low Inc—North Davis
County—Davis
Parts:
C.T. 1252
C.T. 1253.01–1253.02
C.T. 1254.01–1254.02
C.T. 1255–1257
C.T. 1258.01–1258.02
C.T. 1259.03
C.T. 1260
C.T. 1261.04
Low Inc—San Juan Co
County—San Juan
Parts:
Low Income
Low Inc—Sanpete
County—Sanpete
Parts:
Low Income
Low Inc—Sevier
County—Sevier
Parts:
Low Income
Low Inc—South Davis
County—Davis
Parts:
C.T. 1266–1267
C.T. 1270.01–1270.02
Low Inc—Tooele
County—Tooele
Parts:
Low Income
Low Inc—Wasatch
County—Wasatch
Parts:
Low Income
Low Inc—Washington
County—Washington
Parts:
Low Income
Low Inc—Weber
County—Weber
Parts:
Low Income
Low Income—Carbon County
County—Carbon
Parts:
Low Income
Low Income—Duchesne Co
County—Duchesne
Parts:
Low Income
Low Income—Emery
County—Emery
Parts:
Low Income
Low Income—Grand County
County—Grand
Parts:
Low Income
Low Income—Rich Co
County—Rich
Parts:
Low Income
Low Income—Uintah Co
County—Uintah
Parts:
Low Income
Low Income—Utah Co
County—Utah
Parts:
Low Income
Low Income—Wayne Co
County—Wayne
Parts:
Low Income
Low Income—West Salt Lake
County—Salt Lake
Parts:
C.T. 1001
C.T. 1003.02–1003.04
C.T. 1004–1008
C.T. 1011–1012
C.T. 1014–1041
C.T. 1043
C.T. 1045–1049
C.T. 1103–1104
C.T. 1114–1118
C.T. 1121
C.T. 1122.01–1122.02
C.T. 1123.01–1123.02
C.T. 1124.01–1124.02
C.T. 1125.03
C.T. 1126.04–1126.05
C.T. 1126.10
C.T. 1127
C.T. 1128.01–1128.02
C.T. 1128.04–1128.05

DENTAL: Utah
Population Group Listing

Population Group

C.T. 1129.04–1129.11
C.T. 1130.03–1130.06
C.T. 1131
C.T. 1133.04–1133.08
C.T. 1134.02–1134.03
C.T. 1134.05–1134.09
C.T. 1135.05
C.T. 1135.09–1135.24
C.T. 1136–1137
Low Income—Morgan County
County—Morgan
Parts:
Low Income

DENTAL: Utah
Facility Listing

Facility Name

Central Utah Correctional Facility
County—Sanpete
Utah St. Prison (Draper)
County—Salt Lake

DENTAL: Vermont
County Listing

County Name

*Essex

DENTAL: Virginia
County Listing

County Name

*Accomack
Service Area: Accomack/Northampton
*Amelia
*Appomattox
*Bedford
Service Area: Bedford
*Bedford City
Service Area: Bedford
*Brunswick
*Buchanan
*Buckingham
Population Group: Low Income—Buckingham Co
*Charlotte
*Craig
*Dickenson
*Floyd
Greene
*Halifax/S. Boston
*King And Queen
Population Group: Low Income—King And Queen Co
King George
*Lee
*Louisa
*Lunenburg
*Nelson
Service Area: Lovingston
Newport News
Population Group: Low Inc—Newport News
*Northampton
Service Area: Accomack/Northampton
*Nottoway
*Patrick
Portsmouth City
Service Area: Low Inc—Downtown Portsmouth
*Prince Edward

DENTAL: Virginia
County Listing

County Name

Population Group: Low Inc—Prince Edward Co
*Rappahannock
Richmond City
Population Group: Homeless—Richmond City
Population Group: Low Inc East End Richmond
*Russell
Scott
Suffolk
Service Area: City Of Suffolk
*Surry
*Sussex
*Westmoreland
Population Group: Low Inc—Westmoreland Co

DENTAL: Virginia
Service Area Listing

Service Area Name

Accomack/Northampton
County—Accomack
County—Northampton
Bedford
County—Bedford
County—Bedford City
City Of Suffolk
County—Suffolk
Parts:
C.T. 651
C.T. 653–655
C.T. 756
Lovingston
County—Nelson
Parts:
Lovingston District
Massies Mill District
Schuyler District
Low Inc—Downtown Portsmouth
County—Portsmouth City

DENTAL: Virginia
Population Group Listing

Population Group

Homeless—Richmond City
County—Richmond City
Parts:
C.T. 301–306
C.T. 412–415
Low Inc—Newport News
County—Newport News
Parts:
C.T. 301–302
C.T. 302.99
C.T. 303.98
C.T. 304–306
C.T. 308–310
C.T. 313
Low Inc—Prince Edward Co
County—Prince Edward
Parts:
Low Income
Low Inc—Westmoreland Co
County—Westmoreland
Parts:
Low Income
Low Inc East End Richmond
County—Richmond City
Parts:

DENTAL: Virginia
Population Group Listing

Population Group

C.T. 106–111
C.T. 201–212
C.T. 402
Low Income—Buckingham Co
County—Buckingham
Parts:
Low Income
Low Income—King And Queen Co
County—King And Queen
Parts:
Low Income

DENTAL: Washington
County Listing

County Name

*Adams
Population Group: Low Inc/MFW—Othello/Royal City
Benton
Population Group: Low Inc/MFW—Benton/Franklin
*Chelan
Population Group: MSFW—Chelan & Douglas Co
*Clallam
Service Area: W Side Olympic Peninsula
*Columbia
Population Group: Low Inc/MFW—Columbia & Walla Walla
*Cowlitz
Population Group: Low Income—Cowlitz Co
*Douglas
Population Group: MSFW—Chelan & Douglas Co
*Ferry
Franklin
Population Group: Low Inc/MFW—Benton/Franklin
Facility: Coyote Ridge Corr Inst
*Grant
Population Group: Low Inc/MFW—Central Grant Co
*Grays Harbor
Population Group: Low Inc—Grays Harbor
*Island
Population Group: Low Inc—Whidbey Island
*Jefferson
Service Area: W Side Olympic Peninsula
Population Group: Low Inc—Port Townsend
King
Population Group: Low Inc/Homeless—S. King Co
Kitsap
Population Group: Low Inc—Central Bremerton
*Klickitat
Population Group: Low Inc—E Klickitat Co
Population Group: Low Inc/MFW—W Klickitat Co
*Lewis
Population Group: Low Income—Lewis Co
*Lincoln
Service Area: Odessa
*Mason (g)
Facility: Wa Corr/Reception Ctr
*Okanogan
Population Group: Medicaid Eligible—Okanogan Co

DENTAL: Washington
County Listing

County Name

*Pacific
*Pend Oreille
  Service Area: Ione/Metaline
Pierce
  Population Group: Medicaid—S. Pierce Co
*Skagit
  Population Group: Low Inc/MFW—Skagit/Whatcom
Snohomish
  Population Group: Low Inc/Homeless—Everett/Lynnwood
  Facility: Twin Rivers Corr Ctr
Spokane
  Population Group: Low Inc—Central Spokane
*Stevens
Thurston
  Population Group: Low Inc—Yelm
*Wahkiakum
  Population Group: Low Income—Wahkiakum Co
*Walla Walla
  Population Group: Low Inc/MFW—Columbia & Walla Walla
  Facility: Wa State Pen
Whatcom
  Population Group: Low Inc/MFW—Skagit/Whatcom
Yakima
  Population Group: MSFW—Toppenish/Grandview

DENTAL: Washington
Service Area Listing

Service Area Name

Ione/Metaline
  County—Pend Oreille
    Parts:
      Ione-Metaline Falls Division
Odessa
  County—Lincoln
    Parts:
      Odessa Division
W Side Olympic Peninsula
  County—Clallam
    Parts:
      C.T. 9802–9805
  County—Jefferson
    Parts:
      C.T. 9501

DENTAL: Washington
Population Group Listing

Population Group

Low Inc—Central Bremerton
  County—Kitsap
    Parts:
      C.T. 805–806
      C.T. 810–813
Low Inc—Central Spokane
  County—Spokane
    Parts:
      Spokane CCD
Low Inc—E Klickitat Co
  County—Klickitat
    Parts:
      Goldendale CCD
      Horse Heaven CCD
Low Inc—Grays Harbor
  County—Grays Harbor

DENTAL: Washington
Population Group Listing

Population Group

    Parts:
      Low Income
Low Inc—Port Townsend
  County—Jefferson
    Parts:
      Discovery Bay CCD
      Oak Bay CCD
      Quilcene Bay CCD
Low Inc—Whidbey Island
  County—Island
    Parts:
      Central Whidbey CCD
      North Whidbey CCD
      South Whidbey CCD
Low Inc—Yelm
  County—Thurston
    Parts:
      Olympia East Div
      Olympia West Div
      Thurston South Div
Low Inc/Homeless—Everett/Lynnwood
  County—Snohomish
    Parts:
      C.T. 401.98
      C.T. 402–408
      C.T. 410–412
      C.T. 414–415
      C.T. 418.01
      C.T. 418.03–418.04
      C.T. 419.01–419.02
      C.T. 510–512
      C.T. 514–515
      C.T. 517
      C.T. 518.01–518.02
Low Inc/Homeless—S. King Co
  County—King
    Parts:
      C.T. 259
      C.T. 292.01–292.02
      C.T. 297
      C.T. 298.01–298.02
      C.T. 299
      C.T. 300.02
      C.T. 302.02
      C.T. 303.03
      C.T. 305–308
Low Inc/MFW—Benton/Franklin
  County—Benton
    Parts:
      Low Inc/MFW
  County—Franklin
    Parts:
      Low Inc/MFW
Low Inc/MFW—Central Grant Co
  County—Grant
    Parts:
      Ephrata-Soap Lake CCD
      George CCD
      Gloyd CCD
      Moses Lake CCD
      Quincy CCD
      Warden CCD
      Wilson Creek CCD
Low Inc/MFW—Columbia & Walla Walla
  County—Columbia
    Parts:
      Columbia
  County—Walla Walla
    Parts:
      Walla Walla
Low Inc/MFW—Othello/Royal City
  County—Adams

DENTAL: Washington
Population Group Listing

Population Group

    Parts:
      Lind-Washtucna Div
      Ritzville Div
Low Inc/MFW—Skagit/Whatcom
  County—Skagit
    Parts:
      Low Income
      MFW
  County—Whatcom
    Parts:
      Low Income
      MFW
Low Inc/MFW—W Klickitat Co
  County—Klickitat
    Parts:
      Wahkiakus CCD
      White Salmon CCD
      Yakima Res CCD
Low Income—Cowlitz Co
  County—Cowlitz
    Parts:
      Low Income
Low Income—Lewis Co
  County—Lewis
    Parts:
      Low Income
Low Income—Wahkiakum Co
  County—Wahkiakum
    Parts:
      Low Income
Medicaid—S. Pierce Co
  County—Pierce
    Parts:
      Buckley CCD
      Eatonville CCD
      Fort Lewis—Du Pont CCD
      Graham-Thrift CCD
      Mount Rainier CCD
      Puyallup CCD
      Roy CCD
      Tacoma CCD
Medicaid Eligible—Okanogan Co
  County—Okanogan
    Parts:
      Medicaid Eligible
MSFW—Chelan & Douglas Co
  County—Chelan
    Parts:
      MSFW
  County—Douglas
    Parts:
      MSFW
MSFW—Toppenish/Grandview
  County—Yakima
    Parts:
      Mabton CCD
      S Yakima CCD
      Sunnyside CCD
      Toppenish/Wapato CCD

DENTAL: Washington
Facility Listing

Facility Name

Coyote Ridge Corr Inst
  County—Franklin
Twin Rivers Corr Ctr
  County—Snohomish
Wa Corr/Reception Ctr
  County—Mason
Wa State Pen
  County—Walla Walla

DENTAL: West Virginia
County Listing

County Name

*Calhoun
*Hampshire
Service Area: Baker
*Hardy
Service Area: Baker
Kanawha
Service Area: Cedar Grove
*Lincoln
*Logan
*McDowell
*Monongalia
Service Area: Clay/Battelle (WV/PA)
*Raleigh
Facility: FCI Beckley
*Roane
Population Group: Low Inc—Roane Co
*Summers
Wayne
Population Group: Low-Inc Wayne/Ft. Gay
*Wetzel
Service Area: Clay/Battelle (WV/PA)
*Wirt
Population Group: Low Inc—Wirt Co

DENTAL: West Virginia
Service Area Listing

Service Area Name

Baker
County—Hampshire
Parts:
Capon District
County—Hardy
Parts:
Capon District
Lost River District
Cedar Grove
County—Kanawha
Parts:
C.T. 118
Clay/Battelle (WV/PA)
County—Monongalia
Parts:
Western District
County—Wetzel
Parts:
District 1

DENTAL: West Virginia
Population Group Listing

Population Group

Low Inc—Roane Co
County—Roane
Parts:
Low Income
Low Inc—Wirt Co
County—Wirt
Parts:
Low Income
Low-Inc Wayne/Ft. Gay
County—Wayne
Parts:
Butler Dist
Stonewall Dist
Union Dist

DENTAL: West Virginia
Facility Listing

Facility Name

FCI Beckley
County—Raleigh

DENTAL: Wisconsin
County Listing

County Name

*Adams
Population Group: Low Inc—Adams Co
Facility: FCI Oxford
*Barron
Population Group: Low Inc—Barron Co
*Bayfield
Population Group: Low Inc—Bayfield Co
*Burnett
Population Group: Low Inc—Burnett Co
Chippewa
Population Group: Low Inc—Chippewa Co
Dane
Population Group: Low Inc—Central Madison
Douglas
Population Group: Low Inc—Douglas Co
*Dunn
Population Group: Low Inc—Dunn Co
*Forest
Service Area: Mountain
Population Group: Low Inc—Crandon
Kenosha
Population Group: Low Inc—Kenosha City
La Crosse
Population Group: Low Inc—LA Crosse Co
*Langlade
Service Area: Mountain
Population Group: Low Inc—Langlade/Antigo
*Lincoln
Population Group: Low Inc—Lincoln Co
Marathon
Population Group: Low Inc—Wausau City
*Marinette
Population Group: Low Inc—Marinette Co
Milwaukee
Service Area: Inner City West
Service Area: Inner City North (Milwaukee)
Population Group: Low Inc—Inner City Southeast
Population Group: Low Inc—Inner City South
*Monroe
Population Group: Low Inc—Monroe Co
*Oconto
Service Area: Mountain
*Oneida
Population Group: Low Inc—Oneida Co
Population Group: Low Inc—Langlade/Antigo
*Pepin
Population Group: Low Inc—Pepin Co
*Polk
Population Group: Low Inc—Polk Co
*Price
Population Group: Low Inc—Price Co
Rock
Population Group: Low Inc—Central Beloit City
*Rusk
Population Group: Low Inc—Rusk Co
*Sawyer
Population Group: Low Inc—Sawyer Co
*Taylor
Population Group: Low Inc—Taylor Co
*Vernon
Population Group: Low Inc—Vernon Co
*Vilas
Population Group: Low Inc—Vilas Co
*Washburn
Population Group: Low Inc—Washburn Co
*Waushara
Population Group: Low Inc—Waushara Co

DENTAL: Wisconsin
Service Area Listing

Service Area Name

Inner City North (Milwaukee)
County—Milwaukee
Parts:
C.T. 66–72
C.T. 79–86
C.T. 101–107
C.T. 114–118
C.T. 139–142
C.T. 145–147
C.T. 151
Inner City West
County—Milwaukee
Parts:
C.T. 62
C.T. 87–90
C.T. 96–100
C.T. 119–123
C.T. 133–138
C.T. 148–149
Mountain
County—Forest
Parts:
Blackwell Town
Freedom Town
Wabeno Town
County—Langlade
Parts:
Evergreen Town
Langlade Town
White Lake Village
Wolf River Town
County—Oconto
Parts:
Armstrong Town
Bagley Town
Brazeau Town
Breed Town
Doty Town
Lakewood Town
Riverview Town
Townsend Town

DENTAL: Wisconsin
Population Group Listing

Population Group

Low Inc—Adams Co
County—Adams
Parts:
Low Income
Low Inc—Barron Co
County—Barron
Parts:
Low Income
Low Inc—Burnett Co
County—Burnett
Parts:
Low Income
Low Inc—Central Beloit City
County—Rock
Parts:
C.T. 15–19
Low Inc—Central Madison
County—Dane
Parts:
C.T. 11
C.T. 12.98
C.T. 13.98
C.T. 14.01
C.T. 16.01–16.02
C.T. 17
Low Inc—Chippewa Co

DENTAL: Wisconsin
Population Group Listing

Population Group

County—Chippewa
Parts:
Low Income
Low Inc—Crandon
County—Forest
Parts:
Alvin Town
Argonnetown
Armstrong Creek Town
Caswell Town
Crandon City
Crandon Town
Hiles Town
Laona Town
Lincoln Town
Nashville Town
Popple River Town
Ross Town
Low Inc—Douglas Co
County—Douglas
Parts:
Low Income
Low Inc—Dunn Co
County—Dunn
Parts:
Low Income
Low Inc—Inner City Southeast
County—Milwaukee
Parts:
C.T. 178.98
C.T. 179
C.T. 180.97–180.98
Low Inc—Inner City South
County—Milwaukee
Parts:
C.T. 155–159
C.T. 162–169
C.T. 174–177
C.T. 186
Low Inc—Kenosha City
County—Kenosha
Parts:
C.T. 3–4
C.T. 7–12
C.T. 16–18
Low Inc—Lincoln Co
County—Lincoln
Parts:
Low Income
Low Inc—LA Crosse Co
County—La Crosse
Parts:
Low Income
Low Inc—Marinette Co
County—Marinette
Parts:
Low Income
Low Inc—Monroe Co
County—Monroe
Parts:
Low Income
Low Inc—Oneida Co
County—Oneida
Parts:
Low Income
Low Inc—Pepin Co
County—Pepin
Parts:
Low Income
Low Inc—Polk Co
County—Polk
Parts:

DENTAL: Wisconsin
Population Group Listing

Population Group

Low Income
Low Inc—Price Co
County—Price
Parts:
Low Income
Low Inc—Rusk Co
County—Rusk
Parts:
Low Income
Low Inc—Sawyer Co
County—Sawyer
Parts:
Low Income
Low Inc—Vilas Co
County—Vilas
Parts:
Low Income
Low Inc—Washburn Co
County—Washburn
Parts:
Low Income
Low Inc—Wausau City
County—Marathon
Parts:
C.T. 1–2
C.T. 4–5
C.T. 6.01–6.02
C.T. 7
Low Inc—Waushara Co
County—Waushara
Parts:
Low Income
Low Inc—Bayfield Co
County—Bayfield
Parts:
Low Income
Low Inc—Langlade/Antigo
County—Langlade
Parts:
Ackley Town
Ainsworth Town
Antigo City
Antigo Town
Elcho Town
Neva Town
Norwood Town
Parrish Town
Peck Town
Polar Town
Price Town
Rolling Town
Summit Town
Upham Town
County—Oneida
Parts:
Vilas Town
Low Inc—Taylor Co
County—Taylor
Parts:
Low Income
Low Inc—Vernon Co
County—Vernon
Parts:
Low Income

DENTAL: Wisconsin
Facility Listing

Facility Name

FCI Oxford
County—Adams

DENTAL: Wyoming
County Listing

County Name

*Niobrara

DENTAL: American Samoa
County Listing

County Name

*Eastern
Service Area: Terr. Of American Samoa
*Manua
Service Area: Terr. Of American Samoa
*Rose Island
Service Area: Terr. Of American Samoa
*Swains Island
Service Area: Terr. Of American Samoa
*Western
Service Area: Terr. Of American Samoa

DENTAL: American Samoa
Service Area Listing

Service Area Name

Terr. Of American Samoa
County—Eastern
County—Manua
County—Rose Island
County—Swains Island
County—Western

DENTAL: Fed Ste Micronesia
County Listing

County Name

*Chuuk State
*Kosrae State
*Pohnpei State
*Yap State

DENTAL: Guam
County Listing

County Name

*Guam

DENTAL: N. Mariana Islands
County Listing

County Name

*Northern Islands
Service Area: Commonwealth N. Marianas Islands
*Rota
Service Area: Commonwealth N. Marianas Islands
*Saipan
Service Area: Commonwealth N. Marianas Islands
*Tinian
Service Area: Commonwealth N. Marianas Islands

DENTAL: N. Mariana Islands
Service Area Listing

Service Area Name

Commonwealth N. Marianas Islands
County—Northern Islands
County—Rota
County—Saipan
County—Tinian

DENTAL: Republic of Palau
County Listing

County Name
*Republic Of Palau

DENTAL: Puerto Rico
County Listing

County Name
*Adjuntas
Population Group: Low Inc—RSA 7
Aguada
Population Group: Low Inc—RSA 1
Aguadilla
Population Group: Low Inc—RSA 6
*Aguas Buenas
Service Area: Caguas (Sub-Region I)
*Aibonito
Population Group: Low Inc—RSA 21
Anasco
Population Group: Low Inc—RSA 1
*Arecibo
Population Group: Low Inc—RSA 7
*Arroyo
Population Group: Low Inc—RSA 19
*Barceloneta
Population Group: Low Inc—RSA 7
*Barranquitas
Population Group: Low Inc—RSA 8
Cabo Rojo
Population Group: Low Inc—RSA 3
*Caguas
Service Area: Caguas (Sub-Region I)
*Camuy
Population Group: Low Inc—RSA 4
*Canovanas
Population Group: Low Inc—RSA 14
*Carolina
Service Area: Low Inc—RSA 13
*Catano
Population Group: Low Inc—RSA 9
*Cayey
Population Group: Low Inc—RSA 21
*Ceiba
Population Group: Low Inc—RSA 14
*Ciales
Population Group: Low Inc—RSA 24
*Cidra
Service Area: Caguas (Sub-Region I)
*Coamo
Population Group: Low Inc—RSA 20
*Comerio
Population Group: Low Inc—RSA 8
*Corozal
Population Group: Low Inc—RSA 8
*Culebra
Population Group: Low Inc—RSA 14
*Dorado
Population Group: Low Inc—RSA 9
*Fajardo
Population Group: Low Inc—RSA 14
*Florida
Population Group: Low Inc—RSA 7
*Guanica
Population Group: Low Inc—RSA 2
*Guayama
Population Group: Low Inc—RSA 19
Guayanilla
Population Group: Low Inc—RSA 2
*Gurabo
Service Area: Caguas (Sub-Region I)
*Hatillo
Population Group: Low Inc—RSA 4
Hormigueros
Population Group: Low Inc—RSA 3

DENTAL: Puerto Rico
County Listing

County Name
*Humacao
Population Group: Low Inc—RSA 17
*Isabela
Population Group: Low Inc—RSA 6
*Jayuya
Population Group: Low Inc—RSA 7
Juana Diaz
Population Group: Low Inc—RSA 20
*Juncos
Service Area: Caguas (Sub-Region I)
*Lajas
Population Group: Low Inc—RSA 3
*Lares
Population Group: Low Inc—RSA 4
*Las Marias
Population Group: Low Inc—RSA 4
*Las Peidras
Population Group: Low Inc—RSA 17
*Loiza
Population Group: Low Inc—RSA 14
*Luquillo
Population Group: Low Inc—RSA 14
*Manati
Population Group: Low Inc—RSA 24
*Maricao
Population Group: Low Inc—RSA 4
*Maunabo
Population Group: Low Inc—RSA 19
Mayaguez
Population Group: Low Inc—RSA 1
Moca
Population Group: Low Inc—RSA 6
*Morovis
Population Group: Low Inc—RSA 24
*Naguabo
Population Group: Low Inc—RSA 17
*Naranjito
Population Group: Low Inc—RSA 8
*Orocovis
Population Group: Low Inc—RSA 8
*Patillas
Population Group: Low Inc—RSA 19
Penuelas
Population Group: Low Inc—RSA 2
*Quebradillas
Population Group: Low Inc—RSA 6
*Rincon
Population Group: Low Inc—RSA 1
*Rio Grande
Population Group: Low Inc—RSA 14
Sabana Grande
Population Group: Low Inc—RSA 2
*Salinas
Population Group: Low Inc—RSA 20
San German
Population Group: Low Inc—RSA 3
*San Lorenzo
Population Group: Low Inc—RSA 17
*San Sebastian
Population Group: Low Inc—RSA 4
*Santa Isabel
Population Group: Low Inc—RSA 20
*Toa Alta
Population Group: Low Inc—RSA 9
*Toa Baja
Population Group: Low Inc—RSA 9
*Trujillo Alto
Service Area: Low Inc—RSA 13
*Utuado
Population Group: Low Inc—RSA 7
*Vega Alta
Population Group: Low Inc—RSA 23

DENTAL: Puerto Rico
County Listing

County Name
*Vega Baja
Population Group: Low Inc—RSA 23
*Vieques
Population Group: Low Inc—RSA 14
Villalba
Population Group: Low Inc—RSA 20
*Yabucoa
Population Group: Low Inc—RSA 17
*Yauco
Population Group: Low Inc—RSA 2

DENTAL: Puerto Rico
Service Area Listing

Service Area Name
Caguas (Sub-Region I)
County—Aguas Buenas
County—Caguas
County—Cidra
County—Gurabo
County—Juncos
Low Inc—RSA 13
County—Carolina
County—Trujillo Alto

DENTAL: Puerto Rico
Population Group Listing

Population Group
Low Inc—RSA 1
County—Aguada
Parts:
Aguada
County—Anasco
Parts:
Anasco
County—Mayaguez
Parts:
Mayaguez
County—Rincon
Parts:
Rincon
Low Inc—RSA 14
County—Canovanas
Parts:
Canovanas
County—Ceiba
Parts:
Ceiba
County—Culebra
Parts:
Culebra
County—Fajardo
Parts:
Fajardo
County—Loiza
Parts:
Loiza
County—Luquillo
Parts:
Luquillo
County—Rio Grande
Parts:
Rio Grande
County—Vieques
Parts:
Vieques
Low Inc—RSA 17
County—Humacao
Parts:
Humacao
County—Las Peidras

DENTAL: Puerto Rico
Population Group Listing

Population Group

Parts:
Las Piedras
County—Naguabo
Parts:
Naguabo
County—San Lorenzo
Parts:
San Lorenzo
County—Yabucoa
Parts:
Yabucoa
Low Inc—RSA 19
County—Arroyo
Parts:
Arroyo
County—Guayama
Parts:
Guayama
County—Maunabo
Parts:
Maunabo
County—Patillas
Parts:
Patillas
Low Inc—RSA 2
County—Guanica
Parts:
Guanica
County—Guayanilla
Parts:
Guayanilla
County—Penuelas
Parts:
Penuelas
County—Sabana Grande
Parts:
Sabana Grande
County—Yauco
Parts:
Yauco
Low Inc—RSA 20
County—Coamo
Parts:
Coamo
County—Juana Diaz
Parts:
Juana Diaz
County—Salinas
Parts:
Salinas
County—Santa Isabel
Parts:
Santa Isabel
County—Villalba
Parts:
Villalba
Low Inc—RSA 21
County—Aibonito
Parts:
Aibonita
County—Cayey

DENTAL: Puerto Rico
Population Group Listing

Population Group

Parts:
Cayey
Low Inc—RSA 23
County—Vega Alta
Parts:
Low Income
County—Vega Baja
Parts:
Low Income
Low Inc—RSA 24
County—Ciales
Parts:
Ciales
County—Manati
Parts:
Manati
County—Morovis
Parts:
Morovis
Low Inc—RSA 3
County—Cabo Rojo
Parts:
Cabo Rojo
County—Hormigueros
Parts:
Hormiqueros
County—Lajas
Parts:
Lajas
County—San German
Parts:
San German
Low Inc—RSA 4
County—Camuy
Parts:
Camuy
County—Hatillo
Parts:
Hatillo
County—Lares
Parts:
Lares
County—Las Marias
Parts:
Las Marias
County—Maricao
Parts:
Maricao
County—San Sebastian
Parts:
San Sebastian
Low Inc—RSA 6
County—Aguadilla
Parts:
Aguadilla
County—Isabela
Parts:
Isabela
County—Moca
Parts:
Moca

DENTAL: Puerto Rico
Population Group Listing

Population Group

County—Quebradillas
Parts:
Quebradillas
Low Inc—RSA 7
County—Adjuntas
Parts:
Adjuntas
County—Arecibo
Parts:
Arecibo
County—Barceloneta
Parts:
Barceloneta
County—Florida
Parts:
Florida
County—Jayuya
Parts:
Jayuya
County—Utuado
Parts:
Utuado
Low Inc—RSA 8
County—Barranquitas
Parts:
Barranquitas
County—Comerio
Parts:
Comerio
County—Corozal
Parts:
Corozal
County—Naranjito
Parts:
Naranjito
County—Orocovis
Parts:
Orocovis
Low Inc—RSA 9
County—Catano
Parts:
Catano
County—Dorado
Parts:
Dorado
County—Toa Alta
Parts:
Toa Alta
County—Toa Baja
Parts:
Toa Baja

DENTAL: Virgin Islands
County Listing

County Name

*St. Croix

[FR Doc. 02–2967 Filed 2–19–02; 8:45 am]
BILLING CODE 4165–15–P

Federal Register

Wednesday,
February 20, 2002

Part III

Department of Housing and Urban Development

Funding for Fiscal Year 2001: Capacity Building for Community Development and Affordable Housing; Notice

DEPARTMENT OF HOUSING AND URBAN DEVELOPMENT

[Docket No. FR–4704–N–01]

Funding for Fiscal Year 2001: Capacity Building for Community Development and Affordable Housing

AGENCY: Office of the Assistant Secretary for Community Planning and Development, HUD.

ACTION: Notice of funding for fiscal year 2001.

SUMMARY: The fiscal year 2001 HUD Appropriations Act provided $32,450,000 in Fiscal Year 2001 funds for activities authorized in section 4 of the HUD Demonstration Act of 1993. Twenty-five million dollars of these funds is appropriated to the Enterprise Foundation (Enterprise) and the Local Initiatives Support Corporation (LISC) for activities authorized by section 4, as in effect immediately before June 12, 1997. The funds are to be used for capacity building for community development and affordable housing—provided that at least $5,000,000 of the funding is used in rural areas, including tribal areas. These funds are affected by the Consolidated Appropriations Act, 2001 (Pub. L. 106–554, 114 Stat. 2763A–214, approved December 21, 2000), which rescinds an amount equal to 0.22 percent of the Department's discretionary budget authority provided for FY 2001. Therefore, the total amount available for section 4 activities is $32,378,610 with $24,945,000 authorized for Enterprise and LISC of which $4,989,000 will be used in rural areas.

Section 4 authorizes the Secretary to establish by notice such requirements as may be necessary to carry out its provisions. This notice, which takes effect upon issuance, indicates that HUD will equally divide $24,945,000 appropriated for this capacity building initiative between Enterprise and LISC. In addition, $3,450,000 ($3,442,410 after rescission) is appropriated to Habitat for Humanity and $4,000,000 ($3,991,200 after rescission) to Youthbuild USA for section 4 activities. Each organization will match the HUD assistance provided with resources from private sources in an amount equal to three times its share, as required by section 4. Enterprise and LISC will each use at least $2,494,500 of their $12,472,500 share for activities in rural areas, including tribal areas. This notice also provides details regarding administrative and other requirements which shall apply to this program.

FOR FURTHER INFORMATION CONTACT: Karen Daly, Office of Community Planning and Development, Department of Housing and Urban Development, 451 Seventh Street, SW, Room 7216, Washington DC 20410. Telephone Number (202) 708–3176 Ext. 5552. Persons with hearing or speech impediments may access this number via TTY by calling the Federal Information Relay Service at 1–800–877–8339, or they may call: (202) 708–2565. Except for the ''800'' number, these are not toll-free telephone numbers.

SUPPLEMENTARY INFORMATION:

1. Authority

The Departments of Veterans Affairs and Housing and Urban Development, Independent Agencies Appropriations Act (Pub. L. 106–377, 114 Stat. 1441, approved October 27, 2000) (VA/HUD FY 2001 Appropriations Act) makes $32,450,000 available from the Community Development Grants program for capacity building for community development and affordable housing as authorized by section 4 of the HUD Demonstration Act of 1993 (Pub. L. 103–120, 107 Stat. 1148, approved October 27, 1993) (42 U.S.C. 9816 note.) This amount was reduced to $32,378,610 by the Consolidated Appropriations Act, 2001 (Pub. L. 106–554, 114 Stat. 2763A–214, approved December 21, 2000), which rescinds an amount equal to 0.22 percent of the Department's discretionary budget authority provided for FY 2001. HUD will provide this assistance through Enterprise, LISC, Habitat for Humanity and Youthbuild USA ''to develop the capacity and ability of community development corporations and community housing development organizations to undertake community development and affordable housing projects and programs.''

2. Background

In Fiscal Year 1994, HUD provided $20 million to Enterprise and LISC through the National Community Development Initiative (NCDI), as authorized by section 4 of the HUD Demonstration Act of 1993. In FY 1996, $10 million for NCDI was authorized by section 12(b)(3) of the Housing Opportunity Program Extension Act of 1996 (Pub. L. 104–120, 110 Stat. 845, approved March 28, 1996). In accordance with these statutes, HUD divided both appropriations equally between Enterprise and LISC. HUD published a notice in the **Federal Register** of March 30, 1994 (59 FR 14988), which set forth the requirements for receipt of these funds.

In FY 1997, $30.2 million was authorized by the FY 1997 Emergency Supplemental Appropriations Act (Pub. L. 105–18, 111 Stat. 198 and 201, approved June 12, 1997). HUD published a notice in the **Federal Register** of January 30, 1998 (63 FR 5220), which contained requirements for the funds that were made available to Enterprise, LISC, Habitat for Humanity and Youthbuild USA. In the **Federal Register** of May 29, 1998 (63 FR 29418), HUD published a revision to the January 30, 1998 notice. Under these notices, Enterprise and LISC were allocated funding to be used either for new activities or to continue NCDI activities that received funding under the notice dated March 30, 1994 and grant agreements pursuant to it. Funding used to continue NCDI activities was governed by the requirements of the notice dated March 30, 1994 (*see* 59 FR 14988).

The FY 1998 VA/HUD Appropriations Act (Pub. L. 105–65, 111 Stat. 1334, approved October 27, 1997) and the FY 1999 VA/HUD Appropriations Act (Pub. L. 105–276, 112 Stat. 246, approved October 21, 1998) each provided $15 million for activities authorized by section 4. On September 11, 1998 (63 FR 48984) and November 8, 1999 (64 FR 60824), HUD published notices which contained requirements for the funds that were made available to LISC and Enterprise.

In FY 2000, $26,250,000 was authorized by the FY 2000 HUD Appropriations Act (Pub. L. 106–74, 113 Stat. 1047, approved October 20, 1999). HUD published a notice in the **Federal Register** of October 24, 2000 (65 FR 63746) which contained requirements for the funds that were made available to LISC, Enterprise, Habitat for Humanity and Youthbuild, USA.

Today's notice contains requirements for the newly appropriated $32,378,610. These funds may be used for new activities or, in the case of Enterprise and LISC, to continue NCDI activities that received funding under the notice dated March 30, 1994 (59 FR 14988). New grant agreements will be executed to govern these NCDI activities.

3. Allocation and Form of Awards

After rescission, the VA/HUD FY 2001 Appropriations Act provides $32,378,610 for activities authorized by section 4. In accordance with congressional intent, Enterprise and LISC each will be awarded $12,472,500. Each of the two organizations will use $2,494,500 of its share for activities in rural areas, including tribal areas. Habitat for Humanity will be awarded

$3,442,410. Youthbuild USA will be awarded $3,991,200.

4. Eligible Activities

Eligible activities under this award include:

(a) Training, education, support, and advice to enhance the technical and administrative capabilities of community development corporations (CDCs) and community housing development organizations (CHDOs), including the capacity to participate in consolidated planning as well as in fair housing planning and continuum of care homeless assistance efforts that help ensure community-wide participation in assessing area needs; consulting broadly within the community; cooperatively planning for the use of available resources in a comprehensive and holistic manner; and assisting in evaluating performance under these community efforts and in linking plans with neighboring communities in order to foster regional planning;

(b) Loans, grants, development assistance, predevelopment assistance, or other financial assistance to CDCs/CHDOs to carry out community development and affordable housing activities that benefit low-income families and persons, including the acquisition, construction, or rehabilitation of housing for low-income families and persons, and community and economic development activities which create jobs for low-income persons; and

(c) Such other activities as may be determined by Enterprise, LISC, Habitat for Humanity or Youthbuild USA in consultation with the Secretary or his designee.

5. Matching Requirements

As required by section 4 of the 1993 Act, the $32,378,610 appropriation is subject to each award dollar being matched by three dollars in cash or in-kind contributions to be obtained from private sources. Each of the organizations receiving these funds will document its proportionate share of matching resources, including resources committed directly or by a third party to a grantee or subgrantee after October 27, 2000 to conduct activities.

In-kind contributions shall conform to the requirements of 24 CFR 84.23.

6. Administrative and Other Requirements

The award will be governed by 24 CFR part 84 (Uniform Administrative Requirements), OMB Circular A–122 (Cost Principles for Nonprofit Organizations), and OMB Circular A–133 (Audits of States, Local Governments, and Non-Profit Organizations).

Other requirements will be detailed in the terms and conditions of the grant agreement provided to grantees, including the following:

(a) Each grantee will submit to HUD a specific work and funding plan for each community showing when and how the federal funds will be used. The work plan must be sufficiently detailed for monitoring purposes and must identify the performance goals and objectives to be achieved. Within 30 days after submission of a specific work plan, HUD will approve the work plan or notify the grantee of matters that need to be addressed prior to approval, or the work plan shall be construed to be approved. Work plans may be developed for less than the full dollar amount and term of the award, but no HUD-funded costs may be incurred for any activity until the work plan is approved by HUD. All activities are also subject to the environmental requirements in paragraph 6(f) of this notice.

(b) Each grantee shall submit to HUD an annual performance report due 90 days after the end of each calendar year, with the first report due on March 31, 2003. Performance reports shall include reports on both performance and financial progress under work plans and shall include reports on the commitment and expenditure of private matching resources utilized through the end of the reporting period. Reports shall conform to the reporting requirements of 24 CFR part 84. Additional information or increased frequency of reporting, not to exceed twice a year, may be required by HUD any time during the grant agreement if HUD finds such reporting to be necessary for monitoring purposes.

To further the consultation process and share the results of progress to date, the Secretary may require grantees to present and discuss their performance reports at annual meetings in Washington, DC during the life of the award.

(c) The performance reports must contain the information required under 24 CFR part 84, including a comparison of actual accomplishments with the objectives and performance goals of the work plans. In the work plans each grantee will identify performance goals and objectives established for each community in which it proposes to work and appropriate measurements under the work plan such as: The number of housing units and facilities each CDC/CHDO produces annually during the grant period and the average cost of these units. Provided, however, that when the activity described in a work plan is not to be undertaken in a single community that a report indicating the areas in which the activity will be undertaken, along with appropriate goals and objectives, will be provided when that information is available. The performance reports will also include a discussion of the reasonableness of the unit costs; the reasons for slippage if established objectives and goals are not met; and additional pertinent information.

(d) A final performance report, in the form described in paragraph (c) above, shall be provided to HUD by each grantee within 90 days after the completion date of the award.

(e) Financial status reports (SF–269A) shall be submitted semiannually.

(f) Environmental review. Individual projects to be funded by these grants may not be known at the time the overall grants are awarded and also may not be known when some of the individual subgrants are made. Therefore, in accordance with 24 CFR 50.3(h), the application and the grant agreement must provide that no commitment or expenditure of HUD or local funds to a HUD-assisted project may be made until HUD has completed an environmental review to the extent required under applicable regulations and has given notification of its approval in accordance with 24 CFR 50.3(h).

7. Application Content

Grantees will be required to file an application containing the following:

(a) Application for Federal Assistance (OMB Standard Form 424), Non-construction Assurances (SF–424B), Certification Regarding Drug-Free Workplace Requirements, Certification Regarding Lobbying, and the Fair Housing and Equal Opportunity certification described in section 8(f) of this notice;

(b) A Summary Budget for the amount of funds being requested as described in section VI(H) of the Notice with respect to ''Funding Availability for Community Development Technical Assistance (CD–TA) Programs—CHDO, HOME, McKinney Act Homeless Assistance and HOPWA'' published in the **Federal Register** of February 24, 2001 (66 FR 11705) and a similar summary budget for any amounts to be committed to NCDI activities.

8. Findings and Certifications

(a) *Environmental Impact.* A Finding of No Significant Impact with respect to the environment has been made in accordance with the Department's

regulations at 24 CFR part 50, which implement section 102(2)(C) of the National Environmental Policy Act of 1969 (42 U.S.C. 4332). The Finding of No Significant Impact is available for public inspection between 7:30 a.m. and 5:30 p.m. weekdays at the Office of the Rules Docket Clerk, Room 10276, Department of Housing and Urban Development, 451 7th Street, SW, Washington, DC 20410.

(b) *Wage Rates.* Unless triggered by other Federal funds for a project under this grant, the requirements of the Davis-Bacon Act do not apply.

(c) *Relocation.* The Uniform Relocation Act applies to anyone who is displaced as a result of acquisition, rehabilitation, or demolition, for a HUD-assisted activity.

(d) *Federalism.* Executive Order 13132 (entitled ''Federalism'') prohibits, to the extent practicable by law, an agency from promulgating policies that have federalism implications and either impose substantial direct compliance costs on State and local governments and are not required by statute, or that preempt State law, unless the agency meets the relevant requirements of section 6 of the Executive Order. This notice does not have federalism implications and does not impose substantial direct compliance costs on State and local governments or preempt State law within the meaning of the Executive Order.

(e) *Prohibition Against Lobbying Activities.* Applicants for funding under this notice are subject to the provisions of section 319 of the Department of Interior and Related Agencies Appropriation Act for Fiscal Year 1991, 31 U.S.C. 1352 (the Byrd Amendment) and to the provisions of the Lobbying Disclosure Act of 1995 (Pub.L. 104–65, approved December 19, 1995).

The Byrd Amendment, which is implemented in regulations at 24 CFR part 87, prohibits applicants for Federal contracts and grants from using appropriated funds to attempt to influence Federal executive or legislative officers or employees in connection with obtaining such assistance, or with its extension, continuation, renewal, amendment or modification. The Byrd Amendment applies to the funds that are the subject of this notice. Therefore, applicants must file with their application a certification stating that they have not made and will not make any prohibited payments and, if any payments or agreement to make payments of nonappropriated funds for these purposes has been made, a form SF-LLL disclosing such payments must be submitted.

The Lobbying Disclosure Act of 1995 (Pub.L. 104–65, approved December 19, 1995), which repealed section 112 of the HUD Reform Act and resulted in the elimination of the regulations at 24 CFR part 86, requires all persons and entities who lobby covered Executive or Legislative Branch officials to register with the Secretary of the Senate and the Clerk of the House of Representatives and file reports concerning their lobbying activities.

(f) *Fair Housing and Equal Opportunity*— (1) *Threshold Requirements*— (i) *Compliance with Fair Housing and Civil Rights Laws.* Each organization receiving a grant under this notice and its subgrantees must comply with all Fair Housing and civil rights laws, statutes, regulations and executive orders as enumerated in 24 CFR 5.105(a). Federally recognized Indian tribes must comply with the nondiscrimination provisions enumerated at 24 CFR 1000.12.

If an entity that receives funding under this notice :

(a) Has been charged with a systemic violation of the Fair Housing Act by the Secretary alleging ongoing discrimination;

(b) Is a defendant in a Fair Housing Act lawsuit filed by the Department of Justice alleging an ongoing pattern or practice of discrimination; or

(c) Has received a letter of noncompliance findings under Title VI, Section 504, or Section 109,—

HUD will determine whether the charge, lawsuit, or letter of findings has been resolved to the satisfaction of the Department and, if not, take appropriate action. HUD's decision regarding whether a charge, lawsuit, or a letter of findings has been satisfactorily resolved will be based upon whether appropriate actions have been taken to address allegations of ongoing discrimination in the policies or practices involved in the charge, lawsuit, or letter of findings.

(ii) *Nondiscrimination Requirements.* Each organization receiving a grant under this notice and its subgrantees must comply with the Americans with Disabilities Act of 1990 (42 U.S.C. 1201 *et seq.*), and Title IX of the Education Amendments Act of 1972 (20 U.S.C. 1681 *et seq.*).

(iii) *Affirmatively Furthering Fair Housing.* Each organization receiving a grant under this notice and its subgrantees have a duty to affirmatively further fair housing. Each organization and subgrantee should include in their application or work plan the specific steps that they will take to remedy discrimination in housing and to promote fair housing rights and fair housing choice.

(g) *Lead-based Paint Provisions.* Each organization receiving a grant under this notice and its subgrantees must comply with the applicable lead-based paint provisions of 24 CFR part 35, including subparts J and K.

(h) *Certification.* Applications must contain a certification that the organization receiving a grant under this notice and all subgrantees will comply with (1) all the requirements and authorities identified in section (f) of this notice; (2) section 3 of the Housing and Urban Development Act of 1968, as amended (12 U.S.C. 1701u); and (3) HUD's implementing regulations at 24 CFR part 135, which require that, to the greatest extent feasible, opportunities for training and employment be given to low-income persons residing within the unit of local government for the metropolitan area (or nonmetropolitan county) in which the project is located.

Authority: Section 4 of the HUD Demonstration Act of 1993 (Pub. L. 103–120, 42 U.S.C. 9816 note), as amended, Pub. L. 106–377, 114 Stat. 1441 and Pub. L. 106–554, 114 Stat. 2763A–213.

Dated: January 14, 2002.

Roy A. Bernardi,

Assistant Secretary for Community Planning and Development.

[FR Doc. 02–4015 Filed 2–19–02; 8:45 am]

BILLING CODE 4210–29–P

Federal Register

Wednesday,
February 20, 2002

Part III

Department of Housing and Urban Development

Funding for Fiscal Year 2001: Capacity Building for Community Development and Affordable Housing; Notice

DEPARTMENT OF HOUSING AND URBAN DEVELOPMENT

[Docket No. FR–4704–N–01]

Funding for Fiscal Year 2001: Capacity Building for Community Development and Affordable Housing

AGENCY: Office of the Assistant Secretary for Community Planning and Development, HUD.

ACTION: Notice of funding for fiscal year 2001.

SUMMARY: The fiscal year 2001 HUD Appropriations Act provided $32,450,000 in Fiscal Year 2001 funds for activities authorized in section 4 of the HUD Demonstration Act of 1993. Twenty-five million dollars of these funds is appropriated to the Enterprise Foundation (Enterprise) and the Local Initiatives Support Corporation (LISC) for activities authorized by section 4, as in effect immediately before June 12, 1997. The funds are to be used for capacity building for community development and affordable housing—provided that at least $5,000,000 of the funding is used in rural areas, including tribal areas. These funds are affected by the Consolidated Appropriations Act, 2001 (Pub. L. 106–554, 114 Stat. 2763A–214, approved December 21, 2000), which rescinds an amount equal to 0.22 percent of the Department's discretionary budget authority provided for FY 2001. Therefore, the total amount available for section 4 activities is $32,378,610 with $24,945,000 authorized for Enterprise and LISC of which $4,989,000 will be used in rural areas.

Section 4 authorizes the Secretary to establish by notice such requirements as may be necessary to carry out its provisions. This notice, which takes effect upon issuance, indicates that HUD will equally divide $24,945,000 appropriated for this capacity building initiative between Enterprise and LISC. In addition, $3,450,000 ($3,442,410 after rescission) is appropriated to Habitat for Humanity and $4,000,000 ($3,991,200 after rescission) to Youthbuild USA for section 4 activities. Each organization will match the HUD assistance provided with resources from private sources in an amount equal to three times its share, as required by section 4. Enterprise and LISC will each use at least $2,494,500 of their $12,472,500 share for activities in rural areas, including tribal areas. This notice also provides details regarding administrative and other requirements which shall apply to this program.

FOR FURTHER INFORMATION CONTACT: Karen Daly, Office of Community Planning and Development, Department of Housing and Urban Development, 451 Seventh Street, SW, Room 7216, Washington DC 20410. Telephone Number (202) 708–3176 Ext. 5552. Persons with hearing or speech impediments may access this number via TTY by calling the Federal Information Relay Service at 1–800–877–8339, or they may call: (202) 708–2565. Except for the ''800'' number, these are not toll-free telephone numbers.

SUPPLEMENTARY INFORMATION:

1. Authority

The Departments of Veterans Affairs and Housing and Urban Development, Independent Agencies Appropriations Act (Pub. L. 106–377, 114 Stat. 1441, approved October 27, 2000) (VA/HUD FY 2001 Appropriations Act) makes $32,450,000 available from the Community Development Grants program for capacity building for community development and affordable housing as authorized by section 4 of the HUD Demonstration Act of 1993 (Pub. L. 103–120, 107 Stat. 1148, approved October 27, 1993) (42 U.S.C. 9816 note.) This amount was reduced to $32,378,610 by the Consolidated Appropriations Act, 2001 (Pub. L. 106–554, 114 Stat. 2763A–214, approved December 21, 2000), which rescinds an amount equal to 0.22 percent of the Department's discretionary budget authority provided for FY 2001. HUD will provide this assistance through Enterprise, LISC, Habitat for Humanity and Youthbuild USA ''to develop the capacity and ability of community development corporations and community housing development organizations to undertake community development and affordable housing projects and programs.''

2. Background

In Fiscal Year 1994, HUD provided $20 million to Enterprise and LISC through the National Community Development Initiative (NCDI), as authorized by section 4 of the HUD Demonstration Act of 1993. In FY 1996, $10 million for NCDI was authorized by section 12(b)(3) of the Housing Opportunity Program Extension Act of 1996 (Pub. L. 104–120, 110 Stat. 845, approved March 28, 1996). In accordance with these statutes, HUD divided both appropriations equally between Enterprise and LISC. HUD published a notice in the **Federal Register** of March 30, 1994 (59 FR 14988), which set forth the requirements for receipt of these funds.

In FY 1997, $30.2 million was authorized by the FY 1997 Emergency Supplemental Appropriations Act (Pub. L. 105–18, 111 Stat. 198 and 201, approved June 12, 1997). HUD published a notice in the **Federal Register** of January 30, 1998 (63 FR 5220), which contained requirements for the funds that were made available to Enterprise, LISC, Habitat for Humanity and Youthbuild USA. In the **Federal Register** of May 29, 1998 (63 FR 29418), HUD published a revision to the January 30, 1998 notice. Under these notices, Enterprise and LISC were allocated funding to be used either for new activities or to continue NCDI activities that received funding under the notice dated March 30, 1994 and grant agreements pursuant to it. Funding used to continue NCDI activities was governed by the requirements of the notice dated March 30, 1994 (*see* 59 FR 14988).

The FY 1998 VA/HUD Appropriations Act (Pub. L. 105–65, 111 Stat. 1334, approved October 27, 1997) and the FY 1999 VA/HUD Appropriations Act (Pub. L. 105–276, 112 Stat. 246, approved October 21, 1998) each provided $15 million for activities authorized by section 4. On September 11, 1998 (63 FR 48984) and November 8, 1999 (64 FR 60824), HUD published notices which contained requirements for the funds that were made available to LISC and Enterprise.

In FY 2000, $26,250,000 was authorized by the FY 2000 HUD Appropriations Act (Pub. L. 106–74, 113 Stat. 1047, approved October 20, 1999). HUD published a notice in the **Federal Register** of October 24, 2000 (65 FR 63746) which contained requirements for the funds that were made available to LISC, Enterprise, Habitat for Humanity and Youthbuild, USA.

Today's notice contains requirements for the newly appropriated $32,378,610. These funds may be used for new activities or, in the case of Enterprise and LISC, to continue NCDI activities that received funding under the notice dated March 30, 1994 (59 FR 14988). New grant agreements will be executed to govern these NCDI activities.

3. Allocation and Form of Awards

After rescission, the VA/HUD FY 2001 Appropriations Act provides $32,378,610 for activities authorized by section 4. In accordance with congressional intent, Enterprise and LISC each will be awarded $12,472,500. Each of the two organizations will use $2,494,500 of its share for activities in rural areas, including tribal areas. Habitat for Humanity will be awarded

$3,442,410. Youthbuild USA will be awarded $3,991,200.

4. Eligible Activities

Eligible activities under this award include:

(a) Training, education, support, and advice to enhance the technical and administrative capabilities of community development corporations (CDCs) and community housing development organizations (CHDOs), including the capacity to participate in consolidated planning as well as in fair housing planning and continuum of care homeless assistance efforts that help ensure community-wide participation in assessing area needs; consulting broadly within the community; cooperatively planning for the use of available resources in a comprehensive and holistic manner; and assisting in evaluating performance under these community efforts and in linking plans with neighboring communities in order to foster regional planning;

(b) Loans, grants, development assistance, predevelopment assistance, or other financial assistance to CDCs/CHDOs to carry out community development and affordable housing activities that benefit low-income families and persons, including the acquisition, construction, or rehabilitation of housing for low-income families and persons, and community and economic development activities which create jobs for low-income persons; and

(c) Such other activities as may be determined by Enterprise, LISC, Habitat for Humanity or Youthbuild USA in consultation with the Secretary or his designee.

5. Matching Requirements

As required by section 4 of the 1993 Act, the $32,378,610 appropriation is subject to each award dollar being matched by three dollars in cash or in-kind contributions to be obtained from private sources. Each of the organizations receiving these funds will document its proportionate share of matching resources, including resources committed directly or by a third party to a grantee or subgrantee after October 27, 2000 to conduct activities.

In-kind contributions shall conform to the requirements of 24 CFR 84.23.

6. Administrative and Other Requirements

The award will be governed by 24 CFR part 84 (Uniform Administrative Requirements), OMB Circular A–122 (Cost Principles for Nonprofit Organizations), and OMB Circular A–133 (Audits of States, Local Governments, and Non-Profit Organizations).

Other requirements will be detailed in the terms and conditions of the grant agreement provided to grantees, including the following:

(a) Each grantee will submit to HUD a specific work and funding plan for each community showing when and how the federal funds will be used. The work plan must be sufficiently detailed for monitoring purposes and must identify the performance goals and objectives to be achieved. Within 30 days after submission of a specific work plan, HUD will approve the work plan or notify the grantee of matters that need to be addressed prior to approval, or the work plan shall be construed to be approved. Work plans may be developed for less than the full dollar amount and term of the award, but no HUD-funded costs may be incurred for any activity until the work plan is approved by HUD. All activities are also subject to the environmental requirements in paragraph 6(f) of this notice.

(b) Each grantee shall submit to HUD an annual performance report due 90 days after the end of each calendar year, with the first report due on March 31, 2003. Performance reports shall include reports on both performance and financial progress under work plans and shall include reports on the commitment and expenditure of private matching resources utilized through the end of the reporting period. Reports shall conform to the reporting requirements of 24 CFR part 84. Additional information or increased frequency of reporting, not to exceed twice a year, may be required by HUD any time during the grant agreement if HUD finds such reporting to be necessary for monitoring purposes.

To further the consultation process and share the results of progress to date, the Secretary may require grantees to present and discuss their performance reports at annual meetings in Washington, DC during the life of the award.

(c) The performance reports must contain the information required under 24 CFR part 84, including a comparison of actual accomplishments with the objectives and performance goals of the work plans. In the work plans each grantee will identify performance goals and objectives established for each community in which it proposes to work and appropriate measurements under the work plan such as: The number of housing units and facilities each CDC/CHDO produces annually during the grant period and the average cost of these units. Provided, however, that when the activity described in a work plan is not to be undertaken in a single community that a report indicating the areas in which the activity will be undertaken, along with appropriate goals and objectives, will be provided when that information is available. The performance reports will also include a discussion of the reasonableness of the unit costs; the reasons for slippage if established objectives and goals are not met; and additional pertinent information.

(d) A final performance report, in the form described in paragraph (c) above, shall be provided to HUD by each grantee within 90 days after the completion date of the award.

(e) Financial status reports (SF–269A) shall be submitted semiannually.

(f) Environmental review. Individual projects to be funded by these grants may not be known at the time the overall grants are awarded and also may not be known when some of the individual subgrants are made. Therefore, in accordance with 24 CFR 50.3(h), the application and the grant agreement must provide that no commitment or expenditure of HUD or local funds to a HUD-assisted project may be made until HUD has completed an environmental review to the extent required under applicable regulations and has given notification of its approval in accordance with 24 CFR 50.3(h).

7. Application Content

Grantees will be required to file an application containing the following:

(a) Application for Federal Assistance (OMB Standard Form 424), Non-construction Assurances (SF–424B), Certification Regarding Drug-Free Workplace Requirements, Certification Regarding Lobbying, and the Fair Housing and Equal Opportunity certification described in section 8(f) of this notice;

(b) A Summary Budget for the amount of funds being requested as described in section VI(H) of the Notice with respect to ''Funding Availability for Community Development Technical Assistance (CD–TA) Programs—CHDO, HOME, McKinney Act Homeless Assistance and HOPWA'' published in the **Federal Register** of February 24, 2001 (66 FR 11705) and a similar summary budget for any amounts to be committed to NCDI activities.

8. Findings and Certifications

(a) *Environmental Impact.* A Finding of No Significant Impact with respect to the environment has been made in accordance with the Department's

regulations at 24 CFR part 50, which implement section 102(2)(C) of the National Environmental Policy Act of 1969 (42 U.S.C. 4332). The Finding of No Significant Impact is available for public inspection between 7:30 a.m. and 5:30 p.m. weekdays at the Office of the Rules Docket Clerk, Room 10276, Department of Housing and Urban Development, 451 7th Street, SW, Washington, DC 20410.

(b) *Wage Rates.* Unless triggered by other Federal funds for a project under this grant, the requirements of the Davis-Bacon Act do not apply.

(c) *Relocation.* The Uniform Relocation Act applies to anyone who is displaced as a result of acquisition, rehabilitation, or demolition, for a HUD-assisted activity.

(d) *Federalism.* Executive Order 13132 (entitled ''Federalism'') prohibits, to the extent practicable by law, an agency from promulgating policies that have federalism implications and either impose substantial direct compliance costs on State and local governments and are not required by statute, or that preempt State law, unless the agency meets the relevant requirements of section 6 of the Executive Order. This notice does not have federalism implications and does not impose substantial direct compliance costs on State and local governments or preempt State law within the meaning of the Executive Order.

(e) *Prohibition Against Lobbying Activities.* Applicants for funding under this notice are subject to the provisions of section 319 of the Department of Interior and Related Agencies Appropriation Act for Fiscal Year 1991, 31 U.S.C. 1352 (the Byrd Amendment) and to the provisions of the Lobbying Disclosure Act of 1995 (Pub.L. 104–65, approved December 19, 1995).

The Byrd Amendment, which is implemented in regulations at 24 CFR part 87, prohibits applicants for Federal contracts and grants from using appropriated funds to attempt to influence Federal executive or legislative officers or employees in connection with obtaining such assistance, or with its extension, continuation, renewal, amendment or modification. The Byrd Amendment applies to the funds that are the subject of this notice. Therefore, applicants must file with their application a certification stating that they have not made and will not make any prohibited payments and, if any payments or agreement to make payments of nonappropriated funds for these purposes has been made, a form SF-LLL disclosing such payments must be submitted.

The Lobbying Disclosure Act of 1995 (Pub.L. 104–65, approved December 19, 1995), which repealed section 112 of the HUD Reform Act and resulted in the elimination of the regulations at 24 CFR part 86, requires all persons and entities who lobby covered Executive or Legislative Branch officials to register with the Secretary of the Senate and the Clerk of the House of Representatives and file reports concerning their lobbying activities.

(f) *Fair Housing and Equal Opportunity*— (1) *Threshold Requirements*— (i) *Compliance with Fair Housing and Civil Rights Laws.* Each organization receiving a grant under this notice and its subgrantees must comply with all Fair Housing and civil rights laws, statutes, regulations and executive orders as enumerated in 24 CFR 5.105(a). Federally recognized Indian tribes must comply with the nondiscrimination provisions enumerated at 24 CFR 1000.12.

If an entity that receives funding under this notice :

(a) Has been charged with a systemic violation of the Fair Housing Act by the Secretary alleging ongoing discrimination;

(b) Is a defendant in a Fair Housing Act lawsuit filed by the Department of Justice alleging an ongoing pattern or practice of discrimination; or

(c) Has received a letter of noncompliance findings under Title VI, Section 504, or Section 109,—

HUD will determine whether the charge, lawsuit, or letter of findings has been resolved to the satisfaction of the Department and, if not, take appropriate action. HUD's decision regarding whether a charge, lawsuit, or a letter of findings has been satisfactorily resolved will be based upon whether appropriate actions have been taken to address allegations of ongoing discrimination in the policies or practices involved in the charge, lawsuit, or letter of findings.

(ii) *Nondiscrimination Requirements.* Each organization receiving a grant under this notice and its subgrantees must comply with the Americans with Disabilities Act of 1990 (42 U.S.C. 1201 *et seq.*), and Title IX of the Education Amendments Act of 1972 (20 U.S.C. 1681 *et seq.*).

(iii) *Affirmatively Furthering Fair Housing.* Each organization receiving a grant under this notice and its subgrantees have a duty to affirmatively further fair housing. Each organization and subgrantee should include in their application or work plan the specific steps that they will take to remedy discrimination in housing and to promote fair housing rights and fair housing choice.

(g) *Lead-based Paint Provisions.* Each organization receiving a grant under this notice and its subgrantees must comply with the applicable lead-based paint provisions of 24 CFR part 35, including subparts J and K.

(h) *Certification.* Applications must contain a certification that the organization receiving a grant under this notice and all subgrantees will comply with (1) all the requirements and authorities identified in section (f) of this notice; (2) section 3 of the Housing and Urban Development Act of 1968, as amended (12 U.S.C. 1701u); and (3) HUD's implementing regulations at 24 CFR part 135, which require that, to the greatest extent feasible, opportunities for training and employment be given to low-income persons residing within the unit of local government for the metropolitan area (or nonmetropolitan county) in which the project is located.

Authority: Section 4 of the HUD Demonstration Act of 1993 (Pub. L. 103–120, 42 U.S.C. 9816 note), as amended, Pub. L. 106–377, 114 Stat. 1441 and Pub. L. 106–554, 114 Stat. 2763A–213.

Dated: January 14, 2002.

Roy A. Bernardi,

Assistant Secretary for Community Planning and Development.

[FR Doc. 02–4015 Filed 2–19–02; 8:45 am]

BILLING CODE 4210–29–P

Federal Register

Wednesday,
February 20, 2002

Part IV

Department of Transportation

Transportation Security Administration

49 CFR Part 1511

Aviation Security Infrastructure Fees and Assumption of Civil Aviation Security Functions and Responsibilities; Interim Final Rule and Notice

DEPARTMENT OF TRANSPORTATION

Transportation Security Administration

49 CFR Part 1511

[Docket No. TSA–2002–11334]

RIN 2110–AA02

Aviation Security Infrastructure Fees

AGENCY: Transportation Security Administration, DOT.

ACTION: Interim final rule.

SUMMARY: The Transportation Security Administration (TSA) announces a fee that will be imposed on air carriers and foreign air carriers engaged in air transportation, foreign air transportation, and intrastate air transportation effective February 18, 2002. For purposes of this rule, the fee is described as the Aviation Security Infrastructure Fee. The Aviation Security Infrastructure Fee is imposed pursuant to the provisions of the Aviation and Transportation Security Act and is in addition to the September 11th Security Fee imposed on passengers pursuant to an interim final rule published in the **Federal Register** on December 31, 2001. The Aviation Security Infrastructure Fee is necessary to help defray TSA's costs of providing U.S. civil aviation security services. In order to assist TSA in determining the statutory cap for these fees, each air carrier and foreign air carrier who paid for passenger and property screening in calendar year 2000 must complete Appendix A to this part and submit it to TSA by May 18, 2002. The Aviation Security Infrastructure Fee imposed on each air carrier and foreign air carrier will be based on the information the carrier provides in Appendix A. The fee imposed on each air carrier and foreign air carrier for the period running from February 18 through April 30, 2002, must be remitted to TSA by May 31, 2002. Thereafter, payment must be remitted to TSA by the last calendar day of each month.

DATES: This interim final rule is effective on February 18, 2002. Although the imposition of the Aviation Security Infrastructure Fee is statutorily exempted from the rulemaking notice and comment procedures set forth in the Administrative Procedure Act, 5 U.S.C. 553, comments received on or before March 18, 2002 will be reviewed and considered.

ADDRESSES: Submit written, signed comments to TSA Docket No. 2002–11334 , the Docket Clerk, U.S. DOT Dockets, Room PL–401, 400 Seventh Street, SW., Washington, DC 20590–0001. All comments received will be available for examination at the above address between 9 a.m. and 5 p.m., e.t., Monday through Friday, except Federal holidays. Those desiring notification of receipt of comments must include a self-addressed, stamped envelope or postcard on which the following statement is made: ''Comments to Docket No. TSA–2002–11334.'' The post card will be date stamped and mailed to the sender. Comments also may be sent electronically to the Dockets Management System (DMS) at: *http://dms.dot.gov* at any time. Those who wish to file comments electronically should follow the instructions on the DMS web site.

Public Meeting: TSA is considering the possibility of holding a public meeting on this matter and, if so, will issue a separate document in the **Federal Register** to inform the public as to the exact date and location of such a meeting.

FOR FURTHER INFORMATION CONTACT: For guidance involving technical matters: Randall Fiertz, Deputy Director, Cost and Performance Management, Federal Aviation Administration, c/o Department of Transportation (DOT), Office of the Secretary, Office of the Assistant Secretary for Budget and Programs, 400 Seventh St., SW., Room 10101, Washington, DC 20590; telephone (202) 366–9192. For other matters: Rita M. Maristch, Department of Transportation, Office of the General Counsel, Office of Environmental, Civil Rights and General Law, 400 Seventh St., SW., Room 10102, Washington, DC 20590; telephone (202) 366–9161. Office hours are from 9:00 a.m. to 5:30 p.m., e.t. Monday through Friday, except Federal holidays.

SUPPLEMENTARY INFORMATION:

Availability of the Interim Final Rule and Comments Received

An electronic copy of this document may be downloaded using a modem and suitable communications software from the Government Printing Office's Electronic Bulletin Boards Service at (202) 512–1661. Internet users may reach the **Federal Register**'s home page at: *http://www.nara.gov/fedreg* and the Government Printing Office's database at: *http://www.access.gpo.gov.*

Internet users can access this document and all comments received by TSA through DOT's docket management system web site, *http://dms.dot.gov.* It is available 24 hours each day, 365 days each year. Please follow the instructions online for more information and help.

Small Entity Inquiries

The Small Business Regulatory Enforcement Fairness Act (SBREFA) of 1996 requires TSA to comply with small entity requests for information and advice about compliance with statutes and regulations within TSA's jurisdiction. However, because TSA was just established on November 19, 2001, pursuant to Aviation and Transportation Security Act, Pub. L. 107–71, it does not yet have the infrastructure or personnel to provide such information and guidance. Until such time that it does, the Office of the Secretary of Transportation will handle all SBREFA inquiries. Accordingly, any small entity that has a question regarding this document may contact the individuals listed under the caption **FOR FURTHER INFORMATION CONTACT.**

Background

The September 11 Terrorist Attacks and the Aviation and Transportation Security Act

The September 11, 2001 terrorist attacks and the potential for future attacks led Congress to enact the Aviation and Transportation Security Act, Pub. L. 107–71 (ATSA), November 19, 2001, which established TSA as an administration within DOT. TSA is headed by the Under Secretary of Transportation for Security (Under Secretary).

Section 118 of ATSA added § 44940 to Title 49, U.S.C. Section 44940 requires that within 60 days of ATSA's enactment, or as soon as possible thereafter, (1) TSA impose security service fees on passengers of air carriers and foreign air carriers in air transportation, foreign air transportation, and intrastate air transportation (air transportation) who are enplaning aircraft on flights originating at airports in the United States; and (2) to the extent the passenger fees are insufficient to cover TSA's costs of providing civil aviation security services, TSA may impose additional fees on air carriers and foreign air carriers in air transportation. The fees are to help pay the costs of providing U.S. civil aviation security services, which are described in § 44940(a)(1) as:

(1) The salary, benefits, overtime, retirement and other costs of screening personnel, their supervisors and managers, and Federal law enforcement personnel deployed at airport security screening locations;

(2) The costs of training such personnel and the acquisition, operation, and maintenance of equipment used by these personnel;

(3) The costs of performing background investigations of personnel;

(4) The costs of the Federal air marshals program;

(5) The costs of performing civil aviation security research and development under Title 49, U.S.C.;

(6) The costs of Federal Security Directors; and

(7) The costs of deploying Federal law enforcement personnel.

According to § 44940(a)(1), the Under Secretary must determine the amount of the costs of providing these civil aviation security services. His determination is conclusive and not subject to judicial review.

Section 44940(c) provides that the security service fee imposed on passengers may not exceed $2.50 per enplanement or $5.00 per one-way trip. On December 31, 2001, TSA published an interim final rule ''Imposition and Collection of Passenger Civil Aviation Security Service Fees'' (September 11th Security Fees) in the **Federal Register**. 66 FR 67698. This IFR imposed a September 11th Security Fee in the amount of $2.50 on certain passengers enplaning aircraft in air transportation. Passengers may not be charged for more than two enplanements per one-way trip or more than four enplanements per round trip. Pursuant to 49 CFR 1510, direct air carriers and foreign air carriers were required to begin collecting the September 11th Security Fee on February 1, 2002.

The September 11th Security Fee is set at the maximum amount permitted by ATSA because the costs of providing civil aviation security services, as determined by the Under Secretary, are greater than the amount that would be recovered by the collection of fees at that level. Based on collections beginning on February 1, 2002, the September 11th Security Fees collected at the statutory maximum would yield less than $1 billion in fiscal year 2002. The yield would be slightly more in future fiscal years, but will still be insufficient to cover TSA's costs in providing security services identified in 49 U.S.C. 44940.

Section 44940(a)(2)(A) expressly states that if revenues from the September 11th Security Fee are expected to fall short of the amount required to cover civil aviation security service costs, TSA may impose a fee on air carriers and foreign air carriers in air transportation to cover that shortfall. Pursuant to the terms of ATSA, the amount of that fee collected each fiscal year by TSA may not exceed the aggregate amount air carriers and foreign air carriers paid for screening passengers and property in calendar year 2000, as determined by the Under Secretary. For fiscal years 2002 through 2004, the fee imposed on each air carrier and foreign air carrier is limited to the amount that carrier paid for screening passengers and property in calendar year 2000, as determined by the Under Secretary. In addition, the fee collected in fiscal year 2002 may not exceed the amount each carrier paid for screening passengers and property for the period of time in calendar year 2000 proportionate to the period of time in fiscal year 2002 during which the fees are collected. Beginning in fiscal year 2005, the Under Secretary may determine the per-carrier limitation on the basis of market share or any other appropriate measurement, rather than on the carrier's actual screening costs in calendar year 2000.

ATSA requires that the air carrier fee is to be imposed through publication of a notice in the **Federal Register**. However, the statute exempts the imposition of these fees from the procedural rulemaking requirements of 5 U.S.C. 553 and the user fee requirements of 31 U.S.C. 9701.

Section 44940(e)(4) permits the Under Secretary to require an air carrier or foreign air carrier to provide any information necessary to verify that the amount of the fee imposed on the carrier is correct and that the fees are remitted in accordance with law and regulation. According to § 44940(e)(5), the air carrier fee is not considered to be part of the amount paid for taxable transportation under 26 U.S.C. 4261. In addition, § 44940(e)(6) prohibits an air carrier and foreign air carrier from retaining any portion of the fee to cover the carrier's costs of remitting the fee.

The Interim Final Rule

Effective February 18, 2001, the Under Secretary is imposing a fee on air carriers and foreign air carriers engaged in air transportation to pay for the costs of providing U.S. civil aviation security service. For purposes of this rule, the fee will be described as the Aviation Security Infrastructure Fee. The applicability of this part is currently limited to air carriers and foreign air carriers operating passenger aircraft in air transportation. In accordance with 49 U.S.C. 44901(f), TSA is currently considering the screening system necessary to ensure the security of cargo that is transported by all-cargo aircraft in air transportation.

Section 1511.3 provides definitions for various terms used in this part. If a term is not specifically defined in this section, the definitions provided in 49 U.S.C. 40102 apply. TSA anticipates issuing additional general definitions, which will provide further guidance.

According to § 1511.5 of this part, TSA may not collect Aviation Security Infrastructure Fees in an amount that would exceed the aggregate amount air carriers and foreign air carriers paid for screening passengers and property in calendar year 2000, as determined by the Under Secretary. For fiscal years 2002 through 2004, this limitation is constrained by a ''per-carrier'' limitation. More specifically, TSA may not collect Aviation Security Infrastructure Fees from an air carrier or foreign air carrier in an amount that exceeds the amount that carrier paid for screening passengers and property in calendar year 2000, as determined by the Under Secretary. For fiscal years 2005 and beyond, the Under Secretary will redetermine the ''per-carrier'' limitation and such redeterminations may be based on the carrier's respective market share or any other appropriate measure in lieu of its actual screening costs in calendar year 2000. Because the ''per-carrier'' limit through fiscal year 2004 must be based on each carrier's screening costs in 2000, air carriers and foreign air carriers that were not engaged in air transportation as defined in this part in calendar year 2000 will not be subject to the imposition of the Aviation Security Infrastructure Fee until 2005.

Accordingly, TSA must determine the aggregate amount carriers paid for passenger and property screening in calendar year 2000 and the amount each individual carrier paid for screening during that same year. Therefore, all air carriers and foreign air carriers engaged in air transportation in 2000 must fully complete the form set forth in Appendix A to this part, ''Calendar Year 2000 Costs for Passenger and Property Screening'' and submit the form to TSA pursuant to the instructions provided therein by May 18, 2002. In the case of a merger, acquisition, corporate restructuring, reorganization, or name change involving an air carrier or foreign air carrier that paid for the screening of passengers and property transported by passenger aircraft in the United States during calendar year 2000, the successor entity must include those costs on Appendix A of this part and submit those costs together with its own costs to TSA on one form by May 18, 2002. Any other air carrier or foreign air carrier that is no longer providing air transportation, but was doing so in calendar year 2000, must also complete the form set forth in Appendix A and submit the form to TSA by May 18, 2002. Broad applicability of this requirement is necessary because the

aggregate amount paid by air carriers and foreign air carriers for screening passengers and property in calendar year 2000 will serve as the ''overall limit'' on the collection of Aviation Security Infrastructure Fees. This is particularly relevant to fiscal years 2005 and beyond since the ''per-carrier'' limitation will no longer be tied to an individual carrier's screening costs in 2000, and the costs of providing civil aviation security services will greatly exceed the revenues from fees collected pursuant to this part and part 1510. Information submitted in Appendix A will be used to assist the Under Secretary in determining the amount of Aviation Security Infrastructure Fee to be imposed on each carrier.

We specifically invite comments with respect to Appendix A. Other than comments placed in the public docket, information submitted pursuant to 49 U.S.C. 44940(a)(2)(B) or this part, including that contained in Appendix A, will be deemed Sensitive Security Information and subject to the non-disclosure requirements of 49 U.S.C. 40119(b). In addition, confidential business information provided in Appendix A will be protected from public disclosure, as appropriate, under 5 U.S.C. 552, 18 U.S.C. 1905, and 14 CFR 302.12. Requests for confidentiality for purposes of confidential business information must be filed with the Office of the General Counsel (C–10), Department of Transportation, at the address indicated in Appendix A.

Section 1511.7 of the interim final rule mandates that by May 31, 2002, each air carrier and foreign air carrier engaged in air transportation remit to TSA 3.273 percent of the total amount the carrier has indicated in Appendix A of this part, or an amount as otherwise determined by the Under Secretary. Payment in this amount will represent the Aviation Security Infrastructure Fee due for the period running from February 18 through February 28, 2002. Also by May 31, 2002, these air carriers and foreign air carriers must remit 16.666 percent of the total amount the carrier has indicated in Appendix A, or an amount as otherwise determined by the Under Secretary. Payment in this amount will represent the Aviation Security Infrastructure Fee due for the period running March 1 through April 30, 2002. By the last calendar day of each month following May 2002 through September 2004, each air carrier and foreign air carrier must remit to TSA 8.333 percent of the total amount the carrier has indicated in Appendix A, or an amount as otherwise determined by the Under Secretary. By the last calendar day of each month following September 2004, each air carrier and foreign air carrier must remit to TSA 8.333 percent of the total amount as determined by the Under Secretary.

Aviation Security Infrastructure Fees are payable to the ''Transportation Security Administration'' in U.S. currency and must be drawn on a U.S. bank. A monthly payment totaling $1,000 or more must be remitted by electronic funds transfer. Although TSA strongly encourages that payment less than $1,000 also be remitted by electronic funds transfer, such payment may be remitted by check, money order, wire transfer or draft. Carriers will be responsible for paying any bank processing charges on fees remitted pursuant to this part when such charges are assessed on the U.S. government. Specific instructions concerning remittance will be provided directly to air carriers and foreign air carriers and will be posted on the DOT web site at *www.dot.gov* in the near future.

Section 1511.9 of this interim final rule requires an air carrier or foreign air carrier to retain any and all documents, records, or information related to the amount of the Aviation Security Infrastructure Fees imposed on that carrier, including all information applicable to the costs submitted in Appendix A, and information that is reasonably necessary to complete an audit. No later than July 1, 2002, each air carrier and foreign air carrier must submit to TSA an audit performed by an independent certified public accountant of the information the carrier provided pursuant to this part. The accountant must express an opinion as to the fairness and reasonableness of the air carrier's or foreign air carrier's procedures for accounting for and remitting the fees. The accountant's working papers with respect to the audit must be included with this submission. Specific instructions concerning the submission of the audit and working papers will be provided directly to the air carriers and foreign air carriers and will be posted on the DOT web site at *www.dot.gov* in the near future.

This rule requires air carriers and foreign air carriers to allow certain authorized Federal representatives to review and audit any of the carrier's books and records and to provide other information necessary to verify that submissions pursuant to 49 U.S.C. 44940(a)(2)(B) and this part, including that contained in Appendix A, are true and correct and that the aviation security infrastructure fees were remitted consistent with law and regulation.

The rule's enforcement provision states that in addition to any other remedies allowed by law, falsification by any party, directly or indirectly, of information provided by an air carrier or foreign air carrier pursuant to this part, including information submitted in Appendix A, may be prosecuted criminally resulting in a fine and/or imprisonment under 18 U.S.C 1001. An air carrier's or foreign air carrier's failure to comply with the requirements 49 U.S.C. 44940 or the provisions of this part may result in a claim due the United States by the carrier, which shall be collectable pursuant to Federal Claims Collection Act and implementing DOT regulations at 49 CFR part 89.

Good Cause for Immediate Adoption

Section 44940(d)(1) of title 49, U.S.C., explicitly exempts the imposition of the civil aviation security service fees authorized in § 44940 from the procedural rulemaking notice and comment procedures set forth in 5 U.S.C. 553. In addition, it would be impractical and contrary to the public interest to provide for notice and an opportunity for comment before issuing this rule. Immediate action is expressly contemplated by ATSA and necessary to begin collecting the security service fees provided for by the statute. However, TSA will consider all comments received on or before the closing date for comment, including comments received before the issuance of this rule. We will also consider comments filed late to the extent practicable. We may amend this rule in light of the comments we receive.

Paperwork Reduction Act

TSA has determined that this interim final rule will impose new collection of information burdens within the meaning of the Paperwork Reduction Act of 1995 (Pub. L. 104–13, 44 U.S.C. chapter 35) (PRA). TSA is required to submit this proposed collection of information to the Office of Management and Budget (OMB) for review and approval and, accordingly, seeks public comments. Pursuant to 5 CFR 1320.13, *Emergency processing,* TSA has asked OMB for temporary emergency approval for this collection. Interested parties are invited to send comments regarding any aspect of the information collection requirements, including: (1) Whether the collection of information is necessary for TSA's performance of its statutory duties, including whether the information has practical utility; (2) the accuracy of the estimated burden provided to OMB; (3) ways to enhance the quality, utility, and

clarity of the collection of information, and (4) ways to minimize the collection burden without reducing the quality of the information collected. For further information or to comment you may contact: The Office of Information and Regulatory Affairs, Office of Management and Budget, 725–17th Street, NW., Washington, DC 20503, Attention Desk Officer for the Transportation Security Administration. You may also contact Rita Maristch at the address listed under **FOR FURTHER INFORMATION CONTACT** or Steven Cohen, Office of the General Counsel (C–10), at (202) 366–4684.

Summary: The TSA has submitted a request for emergency processing of a public information collection to OMB for review and clearance of the reporting and recordkeeping requirements associated with this interim final rule in accordance with PRA. The Information Collection Request (ICR) abstracted below has been forwarded to OMB for review and comment. The ICR describes the nature of the information collections and their expected burden.

Type of Request: New.

Abstract: For purposes of collecting information necessary to establish the Aviation Security Infrastructure Fee, which will help pay for the costs of providing civil aviation security services as described in 49 U.S.C. 44940 that are not otherwise covered by the collection of the September 11th Security Fee (66 FR 67698, December 31, 2001), air carriers and foreign air carriers will be required to provide information regarding their costs for screening passengers and property in calendar year 2000 and provide for an independent audit of this information to establish and administer this fee.

Form Number: An application for a control number for the form has been submitted to OMB.

Affected Public: The information collection requirement applies to air carriers or foreign air carriers providing air transportation, foreign air transportation, and intrastate air transportation.

Number of Respondents: This information request will apply to approximately 195 air carriers and foreign air carriers.

Frequency: This is a one-time collection.

Estimated Annual Burden: Using the above estimate of 195 carriers who will have to respond, with an estimate of 40 hours of preparation to collect and provide information regarding security costs for screening passengers and property in calendar year 2000, at an assumed rate of $50 an hour, the estimated cost of collecting and preparing the information necessary for 195 respondents is $390,000. In addition, the cost of preparing and submitting 195 independent audits of this information, with an estimate of 120 hours of time to conduct each audit, at an assumed rate of $150 per hour, is $3,510,000. Adding in a postage cost of $218.40 (195 responses at a cost of $1.12 to mail each one), we estimate that it will cost $3,900,218.40 for the affected air carriers and foreign air carriers to prepare, audit, and submit the information necessary to satisfy the information collection requirement.

Economic Analyses

This rulemaking has been reviewed under the provisions of § 6(a)(3)(D) of Executive Order 12866, Regulatory Planning and Review, as well as under DOT's regulatory policies and procedures because it may impose significant costs on air carriers and foreign air carriers. An assessment in accordance with the Executive Order will be conducted in the future. No additional regulatory analysis or evaluation accompanies this rule. TSA has not assessed whether this rule will have a significant economic impact on a substantial number of small entities as defined in the Regulatory Flexibility Act of 1980. When no notice of proposed rulemaking has first been published, the Regulatory Flexibility Act does not apply.

Executive Order 13132, Federalism

The TSA has analyzed this rule under the principles and criteria of Executive Order 13132, Federalism. We determined that this action will not have a substantial direct effect on the States, or the relationship between the national Government and the States, or on the distribution of power and responsibilities among the various levels of government. Therefore, we have determined that this final rule does not have federalism implications.

Unfunded Mandates Reform Act

The Unfunded Mandates Reform Act of 1995 (the Act), enacted as Pub. L. 104–4 on March 22, 1995, is intended, among other things, to curb the practice of imposing unfunded Federal mandates on State, local, and tribal governments. Title II of the Act requires each Federal agency to prepare a written statement assessing the effects of any Federal mandate in a proposed or final agency rule that may result in a $100 million or more expenditure (adjusted annually for inflation) in any one year by State, local, and tribal governments, in the aggregate, or by the private sector.

The requirements of Title II of the Unfunded Mandates Reform Act of 1995 do not apply when rulemaking actions are taken without the issuance of a notice of proposed rulemaking. Accordingly, the TSA has not prepared a statement under the Act.

Environmental Review

TSA has reviewed this action for purposes of the National Environmental Policy Act of 1969 (42 U.S.C. 4321–4347) and has determined that this action will not have a significant effect on the human environment.

Energy Impact

The energy impact of this rule has been assessed in accordance with the Energy Policy and Conservation Act (EPCA) Pub. L. 94–163, as amended. (42 U.S.C. 6362). It has been determined that this rule is not a major regulatory action under the provisions of the EPCA.

List of Subjects in 49 CFR Part 1511

Accounting, Auditing, Air carriers, Air transportation, Enforcement, Federal oversight, Fees, Foreign air carriers, Recordkeeping and reporting requirements, Security measures.

Issued in Washington, DC, on February 14, 2002.

John W. Magaw,

Under Secretary of Transportation for Security.

For the reasons set forth in the preamble, the Transportation Security Administration adds a new part 1511 in Title 49 in Chapter XII, Subchapter A, of the Code of Federal Regulations to read as follows:

PART 1511—AVIATION SECURITY INFRASTRUCTURE FEE

Sec.

1511.1 Applicability and purpose.
1511.3 Definitions.
1511.5 Imposition of Aviation Security Infrastructure Fees.
1511.7 Remittance of Aviation Security Infrastructure Fees.
1511.9 Accounting and auditing requirements.
1511.11 Federal oversight.
1511.13 Enforcement.

Appendix A to Part 1511—Aviation Security Infrastructure Fee.

Authority: 49 U.S.C. 44901 and 44940.

§ 1511.1 Applicability and purpose.

(a) This part prescribes the imposition of a fee on air carriers and foreign air carriers in air transportation to pay for the costs of providing U.S. civil aviation security services as described in 49 U.S.C. 44940.

(b) For purposes of this part, the fee will be described as the ''Aviation Security Infrastructure Fee.''

§ 1511.3 Definitions.

The following definitions apply for purposes of this part. For other definitions that may be applicable to this part refer to 49 U.S.C. 40102.

Air transportation means the carriage by passenger aircraft of persons or property for compensation or hire in intrastate air transportation, interstate air transportation, or foreign air transportation.

Aircraft means a device that is used or intended to be used for flight in the air.

Fiscal year means the fiscal year for the Federal government, which begins each year October 1 and ends on September 30. The fiscal year is designated by the calendar year in which it ends, *e.g.,* fiscal year 2002 is the year beginning October 1, 2001, and ending September 30, 2002.

Foreign air transportation means air transportation between a place in the United States and any place outside of the United States.

Interstate air transportation means air transportation within the United States.

Intrastate air transportation means air transportation wholly within the same State of the United States.

Passenger aircraft means an aircraft that is used to transport passengers in air transportation.

Property means mail, cargo, carry-on and checked baggage, and any other articles transported by passenger aircraft operated by an air carrier or foreign air carrier in air transportation, but excluding property transported under the ''Known Shipper Program.''

Under Secretary means the Under Secretary of Transportation for Security or the Under Secretary's designee.

§ 1511.5 Imposition of Aviation Security Infrastructure Fees.

(a) Effective February 18, 2002, an Aviation Security Infrastructure Fee will be imposed on air carriers and foreign air carriers engaged in air transportation.

(b) The amount of the Aviation Security Infrastructure Fee for each fiscal year will not exceed, in the aggregate, the amounts paid in calendar year 2000 by air carriers and foreign air carriers for the screening of passengers and property transported by passenger aircraft in the United States, as determined by the Under Secretary.

(c) For fiscal years 2002, 2003 and 2004, the amount of the Aviation Security Infrastructure Fee imposed on each air carrier and foreign air carrier will not exceed the amount each such carrier paid for the screening of passengers and property transported by passenger aircraft in the United States during calendar year 2000, as determined by the Under Secretary.

(d) Each air carrier and foreign air carrier that paid for the screening of passengers and property in calendar year 2000 must fully complete the form set forth in Appendix A to this part titled, ''Calendar Year 2000 Costs Paid for Passenger and Property Screening,'' and submit the completed form to the Transportation Security Administration by May 18, 2002.

(e) In the case of a merger, acquisition, corporate restructuring, reorganization, or name change involving an air carrier or foreign air carrier that paid for the screening of passengers and property transported by passenger aircraft in the United States during calendar year 2000, the successor entity must include those screening costs in Appendix A of this part and submit those costs together with its own costs on one form in accordance with paragraph (d) of this section. Any other air carrier or foreign air carrier that paid for the screening of passengers and property transported by passenger aircraft in the United States during calendar year 2000 but is no longer providing air transportation must also complete the form set forth in Appendix A and submit the form in accordance with paragraph (d) of this section.

(f) The Under Secretary has determined that the information submitted pursuant to this part and 49 U.S.C. 44940(a)(2)(B) is Sensitive Security Information and is subject to the non-disclosure requirements of 49 U.S.C. 40119(b).

(g) The amount of the Aviation Security Infrastructure Fee imposed on each air carrier and foreign air carrier will be redetermined for fiscal years 2005 and beyond, and such redeterminations may be based on the carrier's respective market share or any other appropriate measure in lieu of the measure provided in paragraph (c) of this section.

§ 1511.7 Remittance of Aviation Security Infrastructure Fees.

(a) No later than May 31, 2002, each air carrier and foreign air carrier engaged in air transportation must remit to TSA.

(1) 3.273 percent of the total amount the carrier has indicated in Appendix A of this part, or an amount as otherwise determined by the Under Secretary, which will represent the Aviation Security Infrastructure Fee due for the period running from February 18 through February 28, 2002; and,

(2) 16.666 percent of the total amount the carrier has indicated in Appendix A of this part, or an amount as otherwise determined by the Under Secretary, which will represent the Aviation Security Infrastructure Fee due for period running from March 1 through April 30, 2002.

(b) Each air carrier and foreign air carrier engaged in air transportation must remit to TSA 8.333 percent of the total amount the carrier has indicated in Appendix A of this part, or an amount as otherwise determined by the Under Secretary, by the last calendar day of each month following May 2002 up to and including September 2004.

(a) Each air carrier and foreign air carrier engaged in air transportation must remit to TSA 8.333 percent of the total amount as determined by the Under Secretary pursuant to section 1511.5(g) of this part by the last calendar day of each month following September 2004.

(b) Aviation Security Infrastructure Fees must be payable to the ''Transportation Security Administration'' in U.S. currency and drawn on a U.S. bank.

(1) Aviation Security Infrastructure Fees of $1,000 or more must be remitted by electronic funds transfer.

(2) Aviation Security Infrastructure Fees under $1,000 may be remitted by electronic funds transfer, check, money order, wire transfer, or draft.

(a) Air carriers and foreign air carriers are responsible for paying any bank processing charges on Aviation Security Infrastructure Fees remitted under this part when such charges are assessed on the U.S. government.

§ 1511.9 Accounting and auditing requirements.

(a) Each air carrier and foreign air carrier must submit an audit performed by an independent certified public accountant of the information provided pursuant to this part to the Transportation Security Administration by July 1, 2002. The cost of the audit will be borne by the carrier. The accountant must express an opinion as to the fairness and reasonableness of the air carrier's and foreign air carrier's procedures used for accounting and remitting the fees. The accountant's working papers with respect to the audit must accompany this submission.

(b) Each air carrier and foreign air carrier must maintain and retain any and all documents, records, or information related to the amount of the Aviation Security Infrastructure Fees imposed on the carrier pursuant to this

part, including all information applicable to the costs submitted in Appendix A, and information that is reasonably necessary to complete an audit.

§ 1511.11 Federal oversight.

(a) Upon request, air carriers and foreign air carriers must allow any authorized representative of the Secretary of Transportation, the Under Secretary of Transportation for Security, the Inspector General of the Department of Transportation, or the Comptroller General of the United States to audit or review any of the books and records and provide any other information necessary to verify that:

(1) The information submitted pursuant to 49 U.S.C. 44940(a)(2)(B) and this part, including that provided in Appendix A, is true and correct; or

(2) The Aviation Security Infrastructure Fees were remitted consistent with this part.

§ 1511.13 Enforcement.

(a) In addition to any other remedies allowed by law, willful falsification by any party, directly or indirectly, of information provided by an air carrier or foreign air carrier pursuant to this part, including information submitted in Appendix A as required by section 1511.5 of this part, may be prosecuted criminally resulting in a fine and/or imprisonment under 18 U.S.C 1001.

(b) An air carrier's or foreign air carrier's failure to comply with the requirements of 49 U.S.C. 44940 or the provisions of this part may result in a claim due the United States by the carrier, which claim shall be collectable pursuant to 31 U.S.C. Chapter 37 and the Department of Transportation's implementing regulations at 49 CFR part 89.

Appendix A to Part 1511—Aviation Security Infrastructure Fee

Instructions

General guidance

When filling out this form, the responding air carrier or foreign air carrier shall include all costs incurred in calendar year 2000 by that air carrier for the screening of passengers and property. Costs are those attributed to the screening of passengers and property in the United States for both flights within the United States and flights from the United States to foreign destinations. Reported costs must be consistent with the air carrier's financial accounting information reported in accordance with generally accepted accounting principles.

Where actual costs of screening passengers and property cannot be directly identified through an air carrier's accounting system, the air carrier shall use an appropriate alternate cost assignment methodology. Documentation that explains and supports the assignment methodology used, the applicable pool and the allocation basis must be made available upon request. For costs related to capitalized property, please report the associated depreciation expense incurred during calendar year 2000. Capitalization policy must also be made available upon request.

To the extent necessary, the reporting air carrier may aggregate those specific costs that have been incurred but cannot be stated in the detailed cost categories requested by this form. However, all of the costs identified by this form must be included in the total calculations. In addition, explanations regarding costs that have been aggregated need to be provided. Costs reported in Appendix A do not need to include costs that may have been incurred for a position higher than those of the air carrier's director of security (or equivalent). Costs incurred for higher positions, such as those of the air carrier's chief executive officer, do not need to be included.

When including cost information on acquired and/or merged air carriers, the successor air carrier must specify the names of all of such entities whose calendar year 2000 passenger and property screening costs are included in that air carrier's submission as Appendix A.

The costs listed below are to be in US dollars, rounded to the nearest dollar. Place a zero in the appropriate box to indicate cost categories in which the air carrier did not incur costs for passenger and property screening in calendar year 2000.

Supporting Notes

Examples of cost types that appear in the supporting notes below are for illustrative purposes only and are not intended to set forth all relevant costs that must be reported by air carriers and foreign air carriers. In submitting information to TSA, air carriers and foreign air carriers must submit all of their relevant costs, regardless of whether those costs have been specifically illustrated in the notes.

Submission of Data

This form will be available electronically from the Department of Transportation's website at *www.dot.gov.* Air carriers are asked to return the completed form by certified mail to: Chief Financial Officer, Transportation Security Administration, Department of Transportation, 400 Seventh Street SW, Washington, DC 20590. Please also submit the same information in Microsoft Word either on a computer disk or by e-mail to TSA-Fees@ost.dot.gov.

Confidentiality of Data

Consistent with 49 CFR § 1511.5(f), information submitted in Appendix A is deemed to be Sensitive Security Information and will be so protected from public disclosure under 49 U.S.C. 40119(b). In addition, confidential business information and economic information provided in Appendix A will be protected from public disclosure, as appropriate, under 5 U.S.C. § 552 (the Freedom of Information Act), 14 CFR § 302.12, and 18 U.S.C. § 1905. Requests for confidentiality must be filed with the Office of the General Counsel, Department of Transportation (C–10), 400 Seventh Street, SW, Room 10102, Washington, DC 20590

BILLING CODE 4910–62–P

Calendar Year 2000 Costs for Passenger and Property Screening

Air Carrier name(s): _____ Date Form Completed: _____

		Cost Categories	Costs Incurred Directly by Air Carriers[a]	Costs Incurred Through Security Firm Contracts[b]	Costs Incurred Through Other Means[c]	Total Costs Incurred
A) Screening Personnel and Supervisors:	1	Checkpoint Screening Personnel				
	2	Exit Lane Monitors				
	3	Cargo Screeners				
	4	Checked Baggage Screeners				
	5	Baggage Runners				
	6	Supervisory Personnel				
	7	Non-Labor Costs				
	8	Background Checks				
	9	Training and Testing				
	10	Training Records				
	11	Evaluations				
	12	Drug and Alcohol Testing and Treatment				

		Cost Categories	Costs Incurred Directly by Air Carriers	Costs Incurred Through Security Firm Contracts[b]	Costs Incurred Through Other Means[c]	Total Costs Incurred
	13	Uniforms				
	14	Canines				
	15	Cost of Obtaining Security Clearances				
		Total for Section A				
B) Equipment and Procedures:	16	Screening Equipment Installation				
	17	Operating, Operational Maintenance and Testing of Installed Screening Equipment				
	18	Maintenance of Sterile Areas				
	19	Checkpoint Signs and Related Equipment				
	20	Exceptional Screening for Persons and Property				
	21	Security Company Contracts				
		Total for Section B				
C) Property and Plant:	22	Real Estate				
	23	Utilities				
		Total for Section C				

		Cost Categories	Costs Incurred Directly by Air Carriers	Costs Incurred Through Security Firm Contracts[b]	Costs Incurred Through Other Means[c]	Total Costs Incurred
D) Program Management and Contract Oversight:	24	Ground Security Coordinators				
	25	Security Program Management				
	26	Security Contract Administration and Oversight				
	27	Screener/Supervisor Background Check Audits				
	28	Legal Support				
	29	Accounting Support				
	30	Other Administrative Support				
	31	Insurance				
	32	Law Enforcement Costs				
	33	Recruitment Expenses				
		Total for Section D				
E) Security Consortium Costs:	34	Management Fees for Oversight of Consortium Contracts				
		Total for Section E				

		Cost Categories	Costs Incurred Directly by Air Carriers	Costs Incurred Through Security Firm Contracts[b]	Costs Incurred Through Other Means[c]	Total Costs Incurred
F) Other:	35	Other				
		Total for Section F				
Total for all Sections:						

BILLING CODE 4910–62–C

Supporting Notes

a. These are costs that the air carrier incurred directly. Includes costs incurred for air carrier personnel salaries and benefits, equipment owned, leased or rented directly by that air carrier and any other costs directly incurred.

b. These are costs that the air carrier incurred through contracts with security firms. Includes personnel, equipment and other costs incurred through contracts with third party security companies.

c. These are costs that the air carrier incurred through other means. Includes costs incurred through air carrier security consortiums.

1. Salary, benefits, overtime, retirement and other costs of checkpoint screening personnel.

2. Salary, benefits, overtime, retirement and other costs of exit lane monitors.

3. Salary, benefits, overtime, retirement and other costs of cargo screeners.

4. Salary, benefits, overtime, retirement and other costs of checked baggage screeners.

5. Salary, benefits, overtime, retirement and other costs of all baggage runners who move property such as baggage to and from screening areas.

6. Salary, benefits, overtime, retirement and other costs of all supervisory personnel, including Checkpoint Screening Supervisors.

7. All associated expensed non-labor costs including computers, communications equipment, time management systems, supplies, parking, identification badging, furniture, fixtures, and travel.

8. All costs of performing required background investigations on all screening personnel and supervisors. Screening personnel and supervisors includes checkpoint screening personnel, exit lane monitors, cargo screeners, checked baggage screeners, baggage runners, and their supervisors.

9. All costs incurred for the training and testing of all screening personnel and supervisors, including initial, recurrent and remedial training. Includes any computer-based training and the development of training programs for the screening of persons and property as well as any travel, room and board, and all other such expenses related to training.

10. The costs of implementing and maintaining training records for all screening personnel and supervisors.

11. The costs of completing evaluations for all screening personnel and supervisors.

12. All costs for drug and alcohol testing as well as any associated counseling and/or treatment for all screening personnel and supervisors.

13. All costs of renting, purchasing, maintaining, and/or cleaning of uniforms and any related equipment such as flashlights and batons for all screening personnel and supervisors.

14. All costs incurred by air carriers for the use of canines and their handlers used for the screening of persons and property.

15. All costs associated with obtaining security clearances for personnel relating to the screening of persons and property.

16. All costs associated with the purchase, installation, and testing of all screening equipment. In instances where the equipment is capitalized, provide the depreciation expense in lieu of costs associated with purchase, installation, and final acceptance testing. This includes such equipment as Metal Detection Devices, Hand Wands, X-ray screening machines, Explosives Trace Detection Devices, Explosives Detection Systems, or any other such similar technologies. Includes any costs incurred or depreciation costs recognized in calendar year 2000 for the modification and/or construction of any facility needed to accommodate screening, including architecture and engineering. Also includes the costs of any refurbishment and/or modernization of the equipment.

17. Costs of operating, maintaining, and calibrating installed screening equipment. This includes such equipment as Metal Detection Devices, Hand Wands, X-ray screening machines, Explosives Trace Detection Devices, Explosives Detection Systems, or any other such similar technologies. Includes such costs as test objects and X-ray radiation surveys, electricity costs and maintenance contract costs incurred for the operations of such equipment.

18. Costs of maintaining integrity of sterile areas. Includes costs of opening sterile areas, emergency evacuations of sterile areas, and re-screenings not included elsewhere.

19. The cost of purchase or rent, installation, testing, and maintenance of checkpoint signs, barriers, lane markers, and exit lane doors.

20. Any additional costs for special screening such as for disabled passengers, VIP passengers, classified and/or high value items.

21. All security company contract costs for the screening of persons and property that cannot be detailed into any other cost category.

22. All direct costs for the real estate utilized for the screening of persons and property. Includes space at airports for the performance of these functions, as well as such space used for break rooms, private screening rooms, storages space, training rooms, and office space. Also includes appropriate space for the oversight of the screening functions outside of airports such as in headquarters or regional offices.

23. All costs for utilities used for screening. Includes electricity, heating/ventilation/cooling, and telecommunications costs not elsewhere specified.

24. All costs incurred for the Ground Security Coordinator's oversight of the screening functions. Includes personnel salaries, benefits, retirement, training, and non-labor costs.

25. All air carrier head office, regional, or airport specific costs associated with the administration and oversight of screening not elsewhere specified. Includes personnel salaries, benefits, retirement, training, and non-labor costs.

26. All costs associated with the administration and oversight of screening contracts. Includes personnel, benefits, retirement, training, and non-labor costs.

27. All costs not elsewhere specified for background audit checks for all screeners and supervisors.

28. All legal support costs incurred during calendar year 2000 relating to aviation security screening. Includes legal assistance for the implementation and execution of security screening contracts.

29. All costs for accounting and financial services incurred for the support of the screening functions.

30. Includes all labor and non-labor costs for such items as human resource administration, clerical assistance, information technology, and other support functions related to screening.

31. All insurance costs relating to screening. Includes worker's compensation and general liability insurance.

32. All costs incurred by the air carriers for law enforcement personnel costs that were reimbursed by the air carriers for services performed in connection with the screening of persons and property.

33. All costs associated with the recruitment of screening personnel and supervisors. Includes signing bonuses, travel, and other recruitment expenses.

34. Any costs incurred for fees charged by other organizations for the management of contracts for the screening of persons and property.

35. Any costs incurred not elsewhere specified during calendar year 2000 for the screening of passengers and property. These costs should be itemized on a separate sheet. Includes any fines or monetary penalties incurred for screening as well as any profit/bonuses paid to contractors for screening services not included elsewhere on the form.

BILLING CODE 4910–62–P

Certification:

I certify that the information contained in this form (Appendix A-Part 1511) is true and accurate under penalty of law. Willful falsification of any information contained in this form under Part 1511 in Title 49, Chapter XII may be prosecuted criminally and result in a fine and/or imprisonment. (18 U.S.C. 1001)

_____ _____
Certifying Officer (signature) Date

_____ _____
Print Name and Title (CEO, CFO or COO) Telephone Number

Contact Information:

Listed below are the contact name, title, address and telephone number of the person responsible for the payment of the Aviation Security Infrastructure Fees to the Transportation Security Administration:

Name: _____

Title: _____

Address: _____

_____

_____

Telephone: _____

Person Who Prepared Document:

Listed below are the contact name, title, address and telephone number of the person who prepared this document:

Name: _____

Title: _____

Address: _____

_____

_____

Telephone: _____

33

[FR Doc. 02–4148 Filed 2–15–02; 2:25 pm]
BILLING CODE 4910–62–C

Federal Register

Wednesday,
February 20, 2002

Part IV

Department of Transportation

Transportation Security Administration

49 CFR Part 1511

Aviation Security Infrastructure Fees and Assumption of Civil Aviation Security Functions and Responsibilities; Interim Final Rule and Notice

DEPARTMENT OF TRANSPORTATION

Transportation Security Administration

49 CFR Part 1511

[Docket No. TSA–2002–11334]

RIN 2110–AA02

Aviation Security Infrastructure Fees

AGENCY: Transportation Security Administration, DOT.

ACTION: Interim final rule.

SUMMARY: The Transportation Security Administration (TSA) announces a fee that will be imposed on air carriers and foreign air carriers engaged in air transportation, foreign air transportation, and intrastate air transportation effective February 18, 2002. For purposes of this rule, the fee is described as the Aviation Security Infrastructure Fee. The Aviation Security Infrastructure Fee is imposed pursuant to the provisions of the Aviation and Transportation Security Act and is in addition to the September 11th Security Fee imposed on passengers pursuant to an interim final rule published in the **Federal Register** on December 31, 2001. The Aviation Security Infrastructure Fee is necessary to help defray TSA's costs of providing U.S. civil aviation security services. In order to assist TSA in determining the statutory cap for these fees, each air carrier and foreign air carrier who paid for passenger and property screening in calendar year 2000 must complete Appendix A to this part and submit it to TSA by May 18, 2002. The Aviation Security Infrastructure Fee imposed on each air carrier and foreign air carrier will be based on the information the carrier provides in Appendix A. The fee imposed on each air carrier and foreign air carrier for the period running from February 18 through April 30, 2002, must be remitted to TSA by May 31, 2002. Thereafter, payment must be remitted to TSA by the last calendar day of each month.

DATES: This interim final rule is effective on February 18, 2002. Although the imposition of the Aviation Security Infrastructure Fee is statutorily exempted from the rulemaking notice and comment procedures set forth in the Administrative Procedure Act, 5 U.S.C. 553, comments received on or before March 18, 2002 will be reviewed and considered.

ADDRESSES: Submit written, signed comments to TSA Docket No. 2002–11334 , the Docket Clerk, U.S. DOT Dockets, Room PL–401, 400 Seventh Street, SW., Washington, DC 20590–0001. All comments received will be available for examination at the above address between 9 a.m. and 5 p.m., e.t., Monday through Friday, except Federal holidays. Those desiring notification of receipt of comments must include a self-addressed, stamped envelope or postcard on which the following statement is made: ''Comments to Docket No. TSA–2002–11334.'' The post card will be date stamped and mailed to the sender. Comments also may be sent electronically to the Dockets Management System (DMS) at: *http://dms.dot.gov* at any time. Those who wish to file comments electronically should follow the instructions on the DMS web site.

Public Meeting: TSA is considering the possibility of holding a public meeting on this matter and, if so, will issue a separate document in the **Federal Register** to inform the public as to the exact date and location of such a meeting.

FOR FURTHER INFORMATION CONTACT: For guidance involving technical matters: Randall Fiertz, Deputy Director, Cost and Performance Management, Federal Aviation Administration, c/o Department of Transportation (DOT), Office of the Secretary, Office of the Assistant Secretary for Budget and Programs, 400 Seventh St., SW., Room 10101, Washington, DC 20590; telephone (202) 366–9192. For other matters: Rita M. Maristch, Department of Transportation, Office of the General Counsel, Office of Environmental, Civil Rights and General Law, 400 Seventh St., SW., Room 10102, Washington, DC 20590; telephone (202) 366–9161. Office hours are from 9:00 a.m. to 5:30 p.m., e.t. Monday through Friday, except Federal holidays.

SUPPLEMENTARY INFORMATION:

Availability of the Interim Final Rule and Comments Received

An electronic copy of this document may be downloaded using a modem and suitable communications software from the Government Printing Office's Electronic Bulletin Boards Service at (202) 512–1661. Internet users may reach the **Federal Register**'s home page at: *http://www.nara.gov/fedreg* and the Government Printing Office's database at: *http://www.access.gpo.gov.*

Internet users can access this document and all comments received by TSA through DOT's docket management system web site, *http://dms.dot.gov.* It is available 24 hours each day, 365 days each year. Please follow the instructions online for more information and help.

Small Entity Inquiries

The Small Business Regulatory Enforcement Fairness Act (SBREFA) of 1996 requires TSA to comply with small entity requests for information and advice about compliance with statutes and regulations within TSA's jurisdiction. However, because TSA was just established on November 19, 2001, pursuant to Aviation and Transportation Security Act, Pub. L. 107–71, it does not yet have the infrastructure or personnel to provide such information and guidance. Until such time that it does, the Office of the Secretary of Transportation will handle all SBREFA inquiries. Accordingly, any small entity that has a question regarding this document may contact the individuals listed under the caption **FOR FURTHER INFORMATION CONTACT.**

Background

The September 11 Terrorist Attacks and the Aviation and Transportation Security Act

The September 11, 2001 terrorist attacks and the potential for future attacks led Congress to enact the Aviation and Transportation Security Act, Pub. L. 107–71 (ATSA), November 19, 2001, which established TSA as an administration within DOT. TSA is headed by the Under Secretary of Transportation for Security (Under Secretary).

Section 118 of ATSA added § 44940 to Title 49, U.S.C. Section 44940 requires that within 60 days of ATSA's enactment, or as soon as possible thereafter, (1) TSA impose security service fees on passengers of air carriers and foreign air carriers in air transportation, foreign air transportation, and intrastate air transportation (air transportation) who are enplaning aircraft on flights originating at airports in the United States; and (2) to the extent the passenger fees are insufficient to cover TSA's costs of providing civil aviation security services, TSA may impose additional fees on air carriers and foreign air carriers in air transportation. The fees are to help pay the costs of providing U.S. civil aviation security services, which are described in § 44940(a)(1) as:

(1) The salary, benefits, overtime, retirement and other costs of screening personnel, their supervisors and managers, and Federal law enforcement personnel deployed at airport security screening locations;

(2) The costs of training such personnel and the acquisition, operation, and maintenance of equipment used by these personnel;

(3) The costs of performing background investigations of personnel;

(4) The costs of the Federal air marshals program;

(5) The costs of performing civil aviation security research and development under Title 49, U.S.C.;

(6) The costs of Federal Security Directors; and

(7) The costs of deploying Federal law enforcement personnel.

According to § 44940(a)(1), the Under Secretary must determine the amount of the costs of providing these civil aviation security services. His determination is conclusive and not subject to judicial review.

Section 44940(c) provides that the security service fee imposed on passengers may not exceed $2.50 per enplanement or $5.00 per one-way trip. On December 31, 2001, TSA published an interim final rule ''Imposition and Collection of Passenger Civil Aviation Security Service Fees'' (September 11th Security Fees) in the **Federal Register**. 66 FR 67698. This IFR imposed a September 11th Security Fee in the amount of $2.50 on certain passengers enplaning aircraft in air transportation. Passengers may not be charged for more than two enplanements per one-way trip or more than four enplanements per round trip. Pursuant to 49 CFR 1510, direct air carriers and foreign air carriers were required to begin collecting the September 11th Security Fee on February 1, 2002.

The September 11th Security Fee is set at the maximum amount permitted by ATSA because the costs of providing civil aviation security services, as determined by the Under Secretary, are greater than the amount that would be recovered by the collection of fees at that level. Based on collections beginning on February 1, 2002, the September 11th Security Fees collected at the statutory maximum would yield less than $1 billion in fiscal year 2002. The yield would be slightly more in future fiscal years, but will still be insufficient to cover TSA's costs in providing security services identified in 49 U.S.C. 44940.

Section 44940(a)(2)(A) expressly states that if revenues from the September 11th Security Fee are expected to fall short of the amount required to cover civil aviation security service costs, TSA may impose a fee on air carriers and foreign air carriers in air transportation to cover that shortfall. Pursuant to the terms of ATSA, the amount of that fee collected each fiscal year by TSA may not exceed the aggregate amount air carriers and foreign air carriers paid for screening passengers and property in calendar year 2000, as determined by the Under Secretary. For fiscal years 2002 through 2004, the fee imposed on each air carrier and foreign air carrier is limited to the amount that carrier paid for screening passengers and property in calendar year 2000, as determined by the Under Secretary. In addition, the fee collected in fiscal year 2002 may not exceed the amount each carrier paid for screening passengers and property for the period of time in calendar year 2000 proportionate to the period of time in fiscal year 2002 during which the fees are collected. Beginning in fiscal year 2005, the Under Secretary may determine the per-carrier limitation on the basis of market share or any other appropriate measurement, rather than on the carrier's actual screening costs in calendar year 2000.

ATSA requires that the air carrier fee is to be imposed through publication of a notice in the **Federal Register**. However, the statute exempts the imposition of these fees from the procedural rulemaking requirements of 5 U.S.C. 553 and the user fee requirements of 31 U.S.C. 9701.

Section 44940(e)(4) permits the Under Secretary to require an air carrier or foreign air carrier to provide any information necessary to verify that the amount of the fee imposed on the carrier is correct and that the fees are remitted in accordance with law and regulation. According to § 44940(e)(5), the air carrier fee is not considered to be part of the amount paid for taxable transportation under 26 U.S.C. 4261. In addition, § 44940(e)(6) prohibits an air carrier and foreign air carrier from retaining any portion of the fee to cover the carrier's costs of remitting the fee.

The Interim Final Rule

Effective February 18, 2001, the Under Secretary is imposing a fee on air carriers and foreign air carriers engaged in air transportation to pay for the costs of providing U.S. civil aviation security service. For purposes of this rule, the fee will be described as the Aviation Security Infrastructure Fee. The applicability of this part is currently limited to air carriers and foreign air carriers operating passenger aircraft in air transportation. In accordance with 49 U.S.C. 44901(f), TSA is currently considering the screening system necessary to ensure the security of cargo that is transported by all-cargo aircraft in air transportation.

Section 1511.3 provides definitions for various terms used in this part. If a term is not specifically defined in this section, the definitions provided in 49 U.S.C. 40102 apply. TSA anticipates issuing additional general definitions, which will provide further guidance.

According to § 1511.5 of this part, TSA may not collect Aviation Security Infrastructure Fees in an amount that would exceed the aggregate amount air carriers and foreign air carriers paid for screening passengers and property in calendar year 2000, as determined by the Under Secretary. For fiscal years 2002 through 2004, this limitation is constrained by a ''per-carrier'' limitation. More specifically, TSA may not collect Aviation Security Infrastructure Fees from an air carrier or foreign air carrier in an amount that exceeds the amount that carrier paid for screening passengers and property in calendar year 2000, as determined by the Under Secretary. For fiscal years 2005 and beyond, the Under Secretary will redetermine the ''per-carrier'' limitation and such redeterminations may be based on the carrier's respective market share or any other appropriate measure in lieu of its actual screening costs in calendar year 2000. Because the ''per-carrier'' limit through fiscal year 2004 must be based on each carrier's screening costs in 2000, air carriers and foreign air carriers that were not engaged in air transportation as defined in this part in calendar year 2000 will not be subject to the imposition of the Aviation Security Infrastructure Fee until 2005.

Accordingly, TSA must determine the aggregate amount carriers paid for passenger and property screening in calendar year 2000 and the amount each individual carrier paid for screening during that same year. Therefore, all air carriers and foreign air carriers engaged in air transportation in 2000 must fully complete the form set forth in Appendix A to this part, ''Calendar Year 2000 Costs for Passenger and Property Screening'' and submit the form to TSA pursuant to the instructions provided therein by May 18, 2002. In the case of a merger, acquisition, corporate restructuring, reorganization, or name change involving an air carrier or foreign air carrier that paid for the screening of passengers and property transported by passenger aircraft in the United States during calendar year 2000, the successor entity must include those costs on Appendix A of this part and submit those costs together with its own costs to TSA on one form by May 18, 2002. Any other air carrier or foreign air carrier that is no longer providing air transportation, but was doing so in calendar year 2000, must also complete the form set forth in Appendix A and submit the form to TSA by May 18, 2002. Broad applicability of this requirement is necessary because the

aggregate amount paid by air carriers and foreign air carriers for screening passengers and property in calendar year 2000 will serve as the ''overall limit'' on the collection of Aviation Security Infrastructure Fees. This is particularly relevant to fiscal years 2005 and beyond since the ''per-carrier'' limitation will no longer be tied to an individual carrier's screening costs in 2000, and the costs of providing civil aviation security services will greatly exceed the revenues from fees collected pursuant to this part and part 1510. Information submitted in Appendix A will be used to assist the Under Secretary in determining the amount of Aviation Security Infrastructure Fee to be imposed on each carrier.

We specifically invite comments with respect to Appendix A. Other than comments placed in the public docket, information submitted pursuant to 49 U.S.C. 44940(a)(2)(B) or this part, including that contained in Appendix A, will be deemed Sensitive Security Information and subject to the non-disclosure requirements of 49 U.S.C. 40119(b). In addition, confidential business information provided in Appendix A will be protected from public disclosure, as appropriate, under 5 U.S.C. 552, 18 U.S.C. 1905, and 14 CFR 302.12. Requests for confidentiality for purposes of confidential business information must be filed with the Office of the General Counsel (C–10), Department of Transportation, at the address indicated in Appendix A.

Section 1511.7 of the interim final rule mandates that by May 31, 2002, each air carrier and foreign air carrier engaged in air transportation remit to TSA 3.273 percent of the total amount the carrier has indicated in Appendix A of this part, or an amount as otherwise determined by the Under Secretary. Payment in this amount will represent the Aviation Security Infrastructure Fee due for the period running from February 18 through February 28, 2002. Also by May 31, 2002, these air carriers and foreign air carriers must remit 16.666 percent of the total amount the carrier has indicated in Appendix A, or an amount as otherwise determined by the Under Secretary. Payment in this amount will represent the Aviation Security Infrastructure Fee due for the period running March 1 through April 30, 2002. By the last calendar day of each month following May 2002 through September 2004, each air carrier and foreign air carrier must remit to TSA 8.333 percent of the total amount the carrier has indicated in Appendix A, or an amount as otherwise determined by the Under Secretary. By the last calendar day of each month following September 2004, each air carrier and foreign air carrier must remit to TSA 8.333 percent of the total amount as determined by the Under Secretary.

Aviation Security Infrastructure Fees are payable to the ''Transportation Security Administration'' in U.S. currency and must be drawn on a U.S. bank. A monthly payment totaling $1,000 or more must be remitted by electronic funds transfer. Although TSA strongly encourages that payment less than $1,000 also be remitted by electronic funds transfer, such payment may be remitted by check, money order, wire transfer or draft. Carriers will be responsible for paying any bank processing charges on fees remitted pursuant to this part when such charges are assessed on the U.S. government. Specific instructions concerning remittance will be provided directly to air carriers and foreign air carriers and will be posted on the DOT web site at *www.dot.gov* in the near future.

Section 1511.9 of this interim final rule requires an air carrier or foreign air carrier to retain any and all documents, records, or information related to the amount of the Aviation Security Infrastructure Fees imposed on that carrier, including all information applicable to the costs submitted in Appendix A, and information that is reasonably necessary to complete an audit. No later than July 1, 2002, each air carrier and foreign air carrier must submit to TSA an audit performed by an independent certified public accountant of the information the carrier provided pursuant to this part. The accountant must express an opinion as to the fairness and reasonableness of the air carrier's or foreign air carrier's procedures for accounting for and remitting the fees. The accountant's working papers with respect to the audit must be included with this submission. Specific instructions concerning the submission of the audit and working papers will be provided directly to the air carriers and foreign air carriers and will be posted on the DOT web site at *www.dot.gov* in the near future.

This rule requires air carriers and foreign air carriers to allow certain authorized Federal representatives to review and audit any of the carrier's books and records and to provide other information necessary to verify that submissions pursuant to 49 U.S.C. 44940(a)(2)(B) and this part, including that contained in Appendix A, are true and correct and that the aviation security infrastructure fees were remitted consistent with law and regulation.

The rule's enforcement provision states that in addition to any other remedies allowed by law, falsification by any party, directly or indirectly, of information provided by an air carrier or foreign air carrier pursuant to this part, including information submitted in Appendix A, may be prosecuted criminally resulting in a fine and/or imprisonment under 18 U.S.C 1001. An air carrier's or foreign air carrier's failure to comply with the requirements 49 U.S.C. 44940 or the provisions of this part may result in a claim due the United States by the carrier, which shall be collectable pursuant to Federal Claims Collection Act and implementing DOT regulations at 49 CFR part 89.

Good Cause for Immediate Adoption

Section 44940(d)(1) of title 49, U.S.C., explicitly exempts the imposition of the civil aviation security service fees authorized in § 44940 from the procedural rulemaking notice and comment procedures set forth in 5 U.S.C. 553. In addition, it would be impractical and contrary to the public interest to provide for notice and an opportunity for comment before issuing this rule. Immediate action is expressly contemplated by ATSA and necessary to begin collecting the security service fees provided for by the statute. However, TSA will consider all comments received on or before the closing date for comment, including comments received before the issuance of this rule. We will also consider comments filed late to the extent practicable. We may amend this rule in light of the comments we receive.

Paperwork Reduction Act

TSA has determined that this interim final rule will impose new collection of information burdens within the meaning of the Paperwork Reduction Act of 1995 (Pub. L. 104–13, 44 U.S.C. chapter 35) (PRA). TSA is required to submit this proposed collection of information to the Office of Management and Budget (OMB) for review and approval and, accordingly, seeks public comments. Pursuant to 5 CFR 1320.13, *Emergency processing,* TSA has asked OMB for temporary emergency approval for this collection. Interested parties are invited to send comments regarding any aspect of the information collection requirements, including: (1) Whether the collection of information is necessary for TSA's performance of its statutory duties, including whether the information has practical utility; (2) the accuracy of the estimated burden provided to OMB; (3) ways to enhance the quality, utility, and

clarity of the collection of information, and (4) ways to minimize the collection burden without reducing the quality of the information collected. For further information or to comment you may contact: The Office of Information and Regulatory Affairs, Office of Management and Budget, 725–17th Street, NW., Washington, DC 20503, Attention Desk Officer for the Transportation Security Administration. You may also contact Rita Maristch at the address listed under **FOR FURTHER INFORMATION CONTACT** or Steven Cohen, Office of the General Counsel (C–10), at (202) 366–4684.

Summary: The TSA has submitted a request for emergency processing of a public information collection to OMB for review and clearance of the reporting and recordkeeping requirements associated with this interim final rule in accordance with PRA. The Information Collection Request (ICR) abstracted below has been forwarded to OMB for review and comment. The ICR describes the nature of the information collections and their expected burden.

Type of Request: New.

Abstract: For purposes of collecting information necessary to establish the Aviation Security Infrastructure Fee, which will help pay for the costs of providing civil aviation security services as described in 49 U.S.C. 44940 that are not otherwise covered by the collection of the September 11th Security Fee (66 FR 67698, December 31, 2001), air carriers and foreign air carriers will be required to provide information regarding their costs for screening passengers and property in calendar year 2000 and provide for an independent audit of this information to establish and administer this fee.

Form Number: An application for a control number for the form has been submitted to OMB.

Affected Public: The information collection requirement applies to air carriers or foreign air carriers providing air transportation, foreign air transportation, and intrastate air transportation.

Number of Respondents: This information request will apply to approximately 195 air carriers and foreign air carriers.

Frequency: This is a one-time collection.

Estimated Annual Burden: Using the above estimate of 195 carriers who will have to respond, with an estimate of 40 hours of preparation to collect and provide information regarding security costs for screening passengers and property in calendar year 2000, at an assumed rate of $50 an hour, the estimated cost of collecting and preparing the information necessary for 195 respondents is $390,000. In addition, the cost of preparing and submitting 195 independent audits of this information, with an estimate of 120 hours of time to conduct each audit, at an assumed rate of $150 per hour, is $3,510,000. Adding in a postage cost of $218.40 (195 responses at a cost of $1.12 to mail each one), we estimate that it will cost $3,900,218.40 for the affected air carriers and foreign air carriers to prepare, audit, and submit the information necessary to satisfy the information collection requirement.

Economic Analyses

This rulemaking has been reviewed under the provisions of § 6(a)(3)(D) of Executive Order 12866, Regulatory Planning and Review, as well as under DOT's regulatory policies and procedures because it may impose significant costs on air carriers and foreign air carriers. An assessment in accordance with the Executive Order will be conducted in the future. No additional regulatory analysis or evaluation accompanies this rule. TSA has not assessed whether this rule will have a significant economic impact on a substantial number of small entities as defined in the Regulatory Flexibility Act of 1980. When no notice of proposed rulemaking has first been published, the Regulatory Flexibility Act does not apply.

Executive Order 13132, Federalism

The TSA has analyzed this rule under the principles and criteria of Executive Order 13132, Federalism. We determined that this action will not have a substantial direct effect on the States, or the relationship between the national Government and the States, or on the distribution of power and responsibilities among the various levels of government. Therefore, we have determined that this final rule does not have federalism implications.

Unfunded Mandates Reform Act

The Unfunded Mandates Reform Act of 1995 (the Act), enacted as Pub. L. 104–4 on March 22, 1995, is intended, among other things, to curb the practice of imposing unfunded Federal mandates on State, local, and tribal governments. Title II of the Act requires each Federal agency to prepare a written statement assessing the effects of any Federal mandate in a proposed or final agency rule that may result in a $100 million or more expenditure (adjusted annually for inflation) in any one year by State, local, and tribal governments, in the aggregate, or by the private sector.

The requirements of Title II of the Unfunded Mandates Reform Act of 1995 do not apply when rulemaking actions are taken without the issuance of a notice of proposed rulemaking. Accordingly, the TSA has not prepared a statement under the Act.

Environmental Review

TSA has reviewed this action for purposes of the National Environmental Policy Act of 1969 (42 U.S.C. 4321–4347) and has determined that this action will not have a significant effect on the human environment.

Energy Impact

The energy impact of this rule has been assessed in accordance with the Energy Policy and Conservation Act (EPCA) Pub. L. 94–163, as amended. (42 U.S.C. 6362). It has been determined that this rule is not a major regulatory action under the provisions of the EPCA.

List of Subjects in 49 CFR Part 1511

Accounting, Auditing, Air carriers, Air transportation, Enforcement, Federal oversight, Fees, Foreign air carriers, Recordkeeping and reporting requirements, Security measures.

Issued in Washington, DC, on February 14, 2002.

John W. Magaw,

Under Secretary of Transportation for Security.

For the reasons set forth in the preamble, the Transportation Security Administration adds a new part 1511 in Title 49 in Chapter XII, Subchapter A, of the Code of Federal Regulations to read as follows:

PART 1511—AVIATION SECURITY INFRASTRUCTURE FEE

Sec.

1511.1 Applicability and purpose.
1511.3 Definitions.
1511.5 Imposition of Aviation Security Infrastructure Fees.
1511.7 Remittance of Aviation Security Infrastructure Fees.
1511.9 Accounting and auditing requirements.
1511.11 Federal oversight.
1511.13 Enforcement.

Appendix A to Part 1511—Aviation Security Infrastructure Fee.

Authority: 49 U.S.C. 44901 and 44940.

§ 1511.1 Applicability and purpose.

(a) This part prescribes the imposition of a fee on air carriers and foreign air carriers in air transportation to pay for the costs of providing U.S. civil aviation security services as described in 49 U.S.C. 44940.

(b) For purposes of this part, the fee will be described as the ''Aviation Security Infrastructure Fee.''

§ 1511.3 Definitions.

The following definitions apply for purposes of this part. For other definitions that may be applicable to this part refer to 49 U.S.C. 40102.

Air transportation means the carriage by passenger aircraft of persons or property for compensation or hire in intrastate air transportation, interstate air transportation, or foreign air transportation.

Aircraft means a device that is used or intended to be used for flight in the air.

Fiscal year means the fiscal year for the Federal government, which begins each year October 1 and ends on September 30. The fiscal year is designated by the calendar year in which it ends, *e.g.,* fiscal year 2002 is the year beginning October 1, 2001, and ending September 30, 2002.

Foreign air transportation means air transportation between a place in the United States and any place outside of the United States.

Interstate air transportation means air transportation within the United States.

Intrastate air transportation means air transportation wholly within the same State of the United States.

Passenger aircraft means an aircraft that is used to transport passengers in air transportation.

Property means mail, cargo, carry-on and checked baggage, and any other articles transported by passenger aircraft operated by an air carrier or foreign air carrier in air transportation, but excluding property transported under the ''Known Shipper Program.''

Under Secretary means the Under Secretary of Transportation for Security or the Under Secretary's designee.

§ 1511.5 Imposition of Aviation Security Infrastructure Fees.

(a) Effective February 18, 2002, an Aviation Security Infrastructure Fee will be imposed on air carriers and foreign air carriers engaged in air transportation.

(b) The amount of the Aviation Security Infrastructure Fee for each fiscal year will not exceed, in the aggregate, the amounts paid in calendar year 2000 by air carriers and foreign air carriers for the screening of passengers and property transported by passenger aircraft in the United States, as determined by the Under Secretary.

(c) For fiscal years 2002, 2003 and 2004, the amount of the Aviation Security Infrastructure Fee imposed on each air carrier and foreign air carrier will not exceed the amount each such carrier paid for the screening of passengers and property transported by passenger aircraft in the United States during calendar year 2000, as determined by the Under Secretary.

(d) Each air carrier and foreign air carrier that paid for the screening of passengers and property in calendar year 2000 must fully complete the form set forth in Appendix A to this part titled, ''Calendar Year 2000 Costs Paid for Passenger and Property Screening,'' and submit the completed form to the Transportation Security Administration by May 18, 2002.

(e) In the case of a merger, acquisition, corporate restructuring, reorganization, or name change involving an air carrier or foreign air carrier that paid for the screening of passengers and property transported by passenger aircraft in the United States during calendar year 2000, the successor entity must include those screening costs in Appendix A of this part and submit those costs together with its own costs on one form in accordance with paragraph (d) of this section. Any other air carrier or foreign air carrier that paid for the screening of passengers and property transported by passenger aircraft in the United States during calendar year 2000 but is no longer providing air transportation must also complete the form set forth in Appendix A and submit the form in accordance with paragraph (d) of this section.

(f) The Under Secretary has determined that the information submitted pursuant to this part and 49 U.S.C. 44940(a)(2)(B) is Sensitive Security Information and is subject to the non-disclosure requirements of 49 U.S.C. 40119(b).

(g) The amount of the Aviation Security Infrastructure Fee imposed on each air carrier and foreign air carrier will be redetermined for fiscal years 2005 and beyond, and such redeterminations may be based on the carrier's respective market share or any other appropriate measure in lieu of the measure provided in paragraph (c) of this section.

§ 1511.7 Remittance of Aviation Security Infrastructure Fees.

(a) No later than May 31, 2002, each air carrier and foreign air carrier engaged in air transportation must remit to TSA.

(1) 3.273 percent of the total amount the carrier has indicated in Appendix A of this part, or an amount as otherwise determined by the Under Secretary, which will represent the Aviation Security Infrastructure Fee due for the period running from February 18 through February 28, 2002; and,

(2) 16.666 percent of the total amount the carrier has indicated in Appendix A of this part, or an amount as otherwise determined by the Under Secretary, which will represent the Aviation Security Infrastructure Fee due for period running from March 1 through April 30, 2002.

(b) Each air carrier and foreign air carrier engaged in air transportation must remit to TSA 8.333 percent of the total amount the carrier has indicated in Appendix A of this part, or an amount as otherwise determined by the Under Secretary, by the last calendar day of each month following May 2002 up to and including September 2004.

(a) Each air carrier and foreign air carrier engaged in air transportation must remit to TSA 8.333 percent of the total amount as determined by the Under Secretary pursuant to section 1511.5(g) of this part by the last calendar day of each month following September 2004.

(b) Aviation Security Infrastructure Fees must be payable to the ''Transportation Security Administration'' in U.S. currency and drawn on a U.S. bank.

(1) Aviation Security Infrastructure Fees of $1,000 or more must be remitted by electronic funds transfer.

(2) Aviation Security Infrastructure Fees under $1,000 may be remitted by electronic funds transfer, check, money order, wire transfer, or draft.

(a) Air carriers and foreign air carriers are responsible for paying any bank processing charges on Aviation Security Infrastructure Fees remitted under this part when such charges are assessed on the U.S. government.

§ 1511.9 Accounting and auditing requirements.

(a) Each air carrier and foreign air carrier must submit an audit performed by an independent certified public accountant of the information provided pursuant to this part to the Transportation Security Administration by July 1, 2002. The cost of the audit will be borne by the carrier. The accountant must express an opinion as to the fairness and reasonableness of the air carrier's and foreign air carrier's procedures used for accounting and remitting the fees. The accountant's working papers with respect to the audit must accompany this submission.

(b) Each air carrier and foreign air carrier must maintain and retain any and all documents, records, or information related to the amount of the Aviation Security Infrastructure Fees imposed on the carrier pursuant to this

part, including all information applicable to the costs submitted in Appendix A, and information that is reasonably necessary to complete an audit.

§ 1511.11 Federal oversight.

(a) Upon request, air carriers and foreign air carriers must allow any authorized representative of the Secretary of Transportation, the Under Secretary of Transportation for Security, the Inspector General of the Department of Transportation, or the Comptroller General of the United States to audit or review any of the books and records and provide any other information necessary to verify that:

(1) The information submitted pursuant to 49 U.S.C. 44940(a)(2)(B) and this part, including that provided in Appendix A, is true and correct; or

(2) The Aviation Security Infrastructure Fees were remitted consistent with this part.

§ 1511.13 Enforcement.

(a) In addition to any other remedies allowed by law, willful falsification by any party, directly or indirectly, of information provided by an air carrier or foreign air carrier pursuant to this part, including information submitted in Appendix A as required by section 1511.5 of this part, may be prosecuted criminally resulting in a fine and/or imprisonment under 18 U.S.C 1001.

(b) An air carrier's or foreign air carrier's failure to comply with the requirements of 49 U.S.C. 44940 or the provisions of this part may result in a claim due the United States by the carrier, which claim shall be collectable pursuant to 31 U.S.C. Chapter 37 and the Department of Transportation's implementing regulations at 49 CFR part 89.

Appendix A to Part 1511—Aviation Security Infrastructure Fee

Instructions

General guidance

When filling out this form, the responding air carrier or foreign air carrier shall include all costs incurred in calendar year 2000 by that air carrier for the screening of passengers and property. Costs are those attributed to the screening of passengers and property in the United States for both flights within the United States and flights from the United States to foreign destinations. Reported costs must be consistent with the air carrier's financial accounting information reported in accordance with generally accepted accounting principles.

Where actual costs of screening passengers and property cannot be directly identified through an air carrier's accounting system, the air carrier shall use an appropriate alternate cost assignment methodology. Documentation that explains and supports the assignment methodology used, the applicable pool and the allocation basis must be made available upon request. For costs related to capitalized property, please report the associated depreciation expense incurred during calendar year 2000. Capitalization policy must also be made available upon request.

To the extent necessary, the reporting air carrier may aggregate those specific costs that have been incurred but cannot be stated in the detailed cost categories requested by this form. However, all of the costs identified by this form must be included in the total calculations. In addition, explanations regarding costs that have been aggregated need to be provided. Costs reported in Appendix A do not need to include costs that may have been incurred for a position higher than those of the air carrier's director of security (or equivalent). Costs incurred for higher positions, such as those of the air carrier's chief executive officer, do not need to be included.

When including cost information on acquired and/or merged air carriers, the successor air carrier must specify the names of all of such entities whose calendar year 2000 passenger and property screening costs are included in that air carrier's submission as Appendix A.

The costs listed below are to be in US dollars, rounded to the nearest dollar. Place a zero in the appropriate box to indicate cost categories in which the air carrier did not incur costs for passenger and property screening in calendar year 2000.

Supporting Notes

Examples of cost types that appear in the supporting notes below are for illustrative purposes only and are not intended to set forth all relevant costs that must be reported by air carriers and foreign air carriers. In submitting information to TSA, air carriers and foreign air carriers must submit all of their relevant costs, regardless of whether those costs have been specifically illustrated in the notes.

Submission of Data

This form will be available electronically from the Department of Transportation's website at *www.dot.gov.* Air carriers are asked to return the completed form by certified mail to: Chief Financial Officer, Transportation Security Administration, Department of Transportation, 400 Seventh Street SW, Washington, DC 20590. Please also submit the same information in Microsoft Word either on a computer disk or by e-mail to TSA-Fees@ost.dot.gov.

Confidentiality of Data

Consistent with 49 CFR § 1511.5(f), information submitted in Appendix A is deemed to be Sensitive Security Information and will be so protected from public disclosure under 49 U.S.C. 40119(b). In addition, confidential business information and economic information provided in Appendix A will be protected from public disclosure, as appropriate, under 5 U.S.C. § 552 (the Freedom of Information Act), 14 CFR § 302.12, and 18 U.S.C. § 1905. Requests for confidentiality must be filed with the Office of the General Counsel, Department of Transportation (C–10), 400 Seventh Street, SW, Room 10102, Washington, DC 20590

BILLING CODE 4910–62–P

Calendar Year 2000 Costs for Passenger and Property Screening

Air Carrier name(s): _____ Date Form Completed: _____

		Cost Categories	Costs Incurred Directly by Air Carriers[a]	Costs Incurred Through Security Firm Contracts[b]	Costs Incurred Through Other Means[c]	Total Costs Incurred
A) Screening Personnel and Supervisors:	1	Checkpoint Screening Personnel				
	2	Exit Lane Monitors				
	3	Cargo Screeners				
	4	Checked Baggage Screeners				
	5	Baggage Runners				
	6	Supervisory Personnel				
	7	Non-Labor Costs				
	8	Background Checks				
	9	Training and Testing				
	10	Training Records				
	11	Evaluations				
	12	Drug and Alcohol Testing and Treatment				

		Cost Categories	Costs Incurred Directly by Air Carriers	Costs Incurred Through Security Firm Contracts[b]	Costs Incurred Through Other Means[c]	Total Costs Incurred
	13	Uniforms				
	14	Canines				
	15	Cost of Obtaining Security Clearances				
		Total for Section A				
B) Equipment and Procedures:	16	Screening Equipment Installation				
	17	Operating, Operational Maintenance and Testing of Installed Screening Equipment				
	18	Maintenance of Sterile Areas				
	19	Checkpoint Signs and Related Equipment				
	20	Exceptional Screening for Persons and Property				
	21	Security Company Contracts				
		Total for Section B				
C) Property and Plant:	22	Real Estate				
	23	Utilities				
		Total for Section C				

		Cost Categories	Costs Incurred Directly by Air Carriers	Costs Incurred Through Security Firm Contracts[b]	Costs Incurred Through Other Means[c]	Total Costs Incurred
D) Program Management and Contract Oversight:	24	Ground Security Coordinators				
	25	Security Program Management				
	26	Security Contract Administration and Oversight				
	27	Screener/Supervisor Background Check Audits				
	28	Legal Support				
	29	Accounting Support				
	30	Other Administrative Support				
	31	Insurance				
	32	Law Enforcement Costs				
	33	Recruitment Expenses				
		Total for Section D				
E) Security Consortium Costs:	34	Management Fees for Oversight of Consortium Contracts				
		Total for Section E				

		Cost Categories	Costs Incurred Directly by Air Carriers	Costs Incurred Through Security Firm Contracts[b]	Costs Incurred Through Other Means[c]	Total Costs Incurred
F) Other:	35	Other				
		Total for Section F				
Total for all Sections:						

BILLING CODE 4910–62–C

Supporting Notes

a. These are costs that the air carrier incurred directly. Includes costs incurred for air carrier personnel salaries and benefits, equipment owned, leased or rented directly by that air carrier and any other costs directly incurred.

b. These are costs that the air carrier incurred through contracts with security firms. Includes personnel, equipment and other costs incurred through contracts with third party security companies.

c. These are costs that the air carrier incurred through other means. Includes costs incurred through air carrier security consortiums.

1. Salary, benefits, overtime, retirement and other costs of checkpoint screening personnel.

2. Salary, benefits, overtime, retirement and other costs of exit lane monitors.

3. Salary, benefits, overtime, retirement and other costs of cargo screeners.

4. Salary, benefits, overtime, retirement and other costs of checked baggage screeners.

5. Salary, benefits, overtime, retirement and other costs of all baggage runners who move property such as baggage to and from screening areas.

6. Salary, benefits, overtime, retirement and other costs of all supervisory personnel, including Checkpoint Screening Supervisors.

7. All associated expensed non-labor costs including computers, communications equipment, time management systems, supplies, parking, identification badging, furniture, fixtures, and travel.

8. All costs of performing required background investigations on all screening personnel and supervisors. Screening personnel and supervisors includes checkpoint screening personnel, exit lane monitors, cargo screeners, checked baggage screeners, baggage runners, and their supervisors.

9. All costs incurred for the training and testing of all screening personnel and supervisors, including initial, recurrent and remedial training. Includes any computer-based training and the development of training programs for the screening of persons and property as well as any travel, room and board, and all other such expenses related to training.

10. The costs of implementing and maintaining training records for all screening personnel and supervisors.

11. The costs of completing evaluations for all screening personnel and supervisors.

12. All costs for drug and alcohol testing as well as any associated counseling and/or treatment for all screening personnel and supervisors.

13. All costs of renting, purchasing, maintaining, and/or cleaning of uniforms and any related equipment such as flashlights and batons for all screening personnel and supervisors.

14. All costs incurred by air carriers for the use of canines and their handlers used for the screening of persons and property.

15. All costs associated with obtaining security clearances for personnel relating to the screening of persons and property.

16. All costs associated with the purchase, installation, and testing of all screening equipment. In instances where the equipment is capitalized, provide the depreciation expense in lieu of costs associated with purchase, installation, and final acceptance testing. This includes such equipment as Metal Detection Devices, Hand Wands, X-ray screening machines, Explosives Trace Detection Devices, Explosives Detection Systems, or any other such similar technologies. Includes any costs incurred or depreciation costs recognized in calendar year 2000 for the modification and/or construction of any facility needed to accommodate screening, including architecture and engineering. Also includes the costs of any refurbishment and/or modernization of the equipment.

17. Costs of operating, maintaining, and calibrating installed screening equipment. This includes such equipment as Metal Detection Devices, Hand Wands, X-ray screening machines, Explosives Trace Detection Devices, Explosives Detection Systems, or any other such similar technologies. Includes such costs as test objects and X-ray radiation surveys, electricity costs and maintenance contract costs incurred for the operations of such equipment.

18. Costs of maintaining integrity of sterile areas. Includes costs of opening sterile areas, emergency evacuations of sterile areas, and re-screenings not included elsewhere.

19. The cost of purchase or rent, installation, testing, and maintenance of checkpoint signs, barriers, lane markers, and exit lane doors.

20. Any additional costs for special screening such as for disabled passengers, VIP passengers, classified and/or high value items.

21. All security company contract costs for the screening of persons and property that cannot be detailed into any other cost category.

22. All direct costs for the real estate utilized for the screening of persons and property. Includes space at airports for the performance of these functions, as well as such space used for break rooms, private screening rooms, storages space, training rooms, and office space. Also includes appropriate space for the oversight of the screening functions outside of airports such as in headquarters or regional offices.

23. All costs for utilities used for screening. Includes electricity, heating/ventilation/cooling, and telecommunications costs not elsewhere specified.

24. All costs incurred for the Ground Security Coordinator's oversight of the screening functions. Includes personnel salaries, benefits, retirement, training, and non-labor costs.

25. All air carrier head office, regional, or airport specific costs associated with the administration and oversight of screening not elsewhere specified. Includes personnel salaries, benefits, retirement, training, and non-labor costs.

26. All costs associated with the administration and oversight of screening contracts. Includes personnel, benefits, retirement, training, and non-labor costs.

27. All costs not elsewhere specified for background audit checks for all screeners and supervisors.

28. All legal support costs incurred during calendar year 2000 relating to aviation security screening. Includes legal assistance for the implementation and execution of security screening contracts.

29. All costs for accounting and financial services incurred for the support of the screening functions.

30. Includes all labor and non-labor costs for such items as human resource administration, clerical assistance, information technology, and other support functions related to screening.

31. All insurance costs relating to screening. Includes worker's compensation and general liability insurance.

32. All costs incurred by the air carriers for law enforcement personnel costs that were reimbursed by the air carriers for services performed in connection with the screening of persons and property.

33. All costs associated with the recruitment of screening personnel and supervisors. Includes signing bonuses, travel, and other recruitment expenses.

34. Any costs incurred for fees charged by other organizations for the management of contracts for the screening of persons and property.

35. Any costs incurred not elsewhere specified during calendar year 2000 for the screening of passengers and property. These costs should be itemized on a separate sheet. Includes any fines or monetary penalties incurred for screening as well as any profit/bonuses paid to contractors for screening services not included elsewhere on the form.

BILLING CODE 4910–62–P

Certification:

I certify that the information contained in this form (Appendix A-Part 1511) is true and accurate under penalty of law. Willful falsification of any information contained in this form under Part 1511 in Title 49, Chapter XII may be prosecuted criminally and result in a fine and/or imprisonment. (18 U.S.C. 1001)

_____ _____
Certifying Officer (signature) Date

_____ _____
Print Name and Title (CEO, CFO or COO) Telephone Number

Contact Information:

Listed below are the contact name, title, address and telephone number of the person responsible for the payment of the Aviation Security Infrastructure Fees to the Transportation Security Administration:

Name: _____

Title: _____

Address: _____

_____

_____

Telephone: _____

Person Who Prepared Document:

Listed below are the contact name, title, address and telephone number of the person who prepared this document:

Name: _____

Title: _____

Address: _____

_____

_____

Telephone: _____

33

[FR Doc. 02–4148 Filed 2–15–02; 2:25 pm]
BILLING CODE 4910–62–C

DEPARTMENT OF TRANSPORTATION

Transportation Security Administration

Assumption of Civil Aviation Security Functions and Responsibilities Under Chapter 449, Title 49, U.S.C.

AGENCY: Transportation Security Administration, DOT.

ACTION: Notice.

SUMMARY: The Transportation Security Administration (TSA) announces its assumption of civil aviation security functions and responsibilities, as provided by the Aviation and Transportation Security Act. Effective February 17, 2002, civil aviation security functions and responsibilities currently performed by the Federal Aviation Administration are transferred to the TSA. As required by the Aviation and Transportation Security Act, TSA will federalize all airport security screeners, under a schedule described in this notice.

FOR FURTHER INFORMATION CONTACT: Robert Klothe or Steven Cohen, Office of the General Counsel, Department of Transportation, 400 Seventh Street, SW., Washington, DC 20590, (202) 366–9307 (voice), (202) 366–9318 (fax).

SUPPLEMENTARY INFORMATION:

Electronic Access

An electronic copy of this document may be downloaded using a modem and suitable communications software from the Government Printing Office Electronic Bulletin Board Service at (202) 512–1661. Internet users may reach the Office of the Federal Register's home page at *http://www.nara.gov/fedreg* and the Government Printing Office's web page at *http://www.access.gpo.gov/nara.*

Internet users can access this document through the docket management system web site, *http://dms.dot.gov.* It is available 24 hours each day, 365 days each year. Please follow the instructions online for more information and help.

Background

In light of the September 11, 2001, terrorist attacks in the United States and the potential for future attacks in this country, Congress enacted the Aviation and Transportation Security Act (ATSA), Public Law 107–71, 115 Stat. 597 (November 19, 2001), which establishes the Transportation Security Administration (TSA) as an operating administration within the Department of Transportation (DOT), headed by the Under Secretary of Transportation for Security (Under Secretary). The Under Secretary took office on January 7, 2002.

Pursuant to ATSA, the TSA is responsible for security in all modes of transportation, including civil aviation under Chapter 449 of title 49, United States Code, related research and development activities, and other transportation security functions exercised by DOT. The TSA is specifically responsible for the day-to-day security screening operations for passenger air transportation and intrastate air transportation under 49 U.S.C. 44901 and 44935. This responsibility includes hiring, training, testing, and deploying or arranging for Federal security screeners, Federal security personnel, Federal law enforcement officers, and Federal Security Managers at U.S. airports. The TSA must also research, develop and deploy security equipment and programs at U.S. airports, coordinate transportation security intelligence information, coordinate transportation security efforts with Federal and State agencies, and deal with threats to transportation.

Section 101(g) of ATSA, which added section 114 to chapter 1 of title 49, United States Code, requires the Under Secretary to assume civil aviation security functions and responsibilities under chapter 449 of title 49, United States Code, by February 17, 2002, in accordance with a schedule developed by the Secretary, upon consulting with air carriers, foreign air carriers, and the Administrator of the Federal Aviation Administration (FAA). The ATSA also requires the Under Secretary to publish notice of the transfer of such security functions and responsibilities before assuming them from the FAA. This notice announces that the required consultations have taken place and that the transfer of civil aviation security functions is effective February 17, 2002. The following table contains a summary of major completed and planned activities. Additional information is provided in the text following the table.

Activity	Date accomplished or expected	Statutory reference within ATSA
Establish qualification standards for security screeners to be hired by TSA	12/19/01	Sec. 111(a)
Require screening of all checked baggage	01/18/02	Sec. 110(b)
Develop a training plan for security screeners	01/18/02	Sec. 111(a)
Issue notice for collection of passenger fees for aviation security services	01/18/02 (66 FR 67698)	Sec. 118(a)
Assume civil aviation security functions and responsibilities	02/17/02	Sec. 101(g)(1)
Implement Aviation Security Program for Charter Aircraft of 12,500 pounds or larger	02/17/02	Sec. 132(a)
Report to Congress on measures adopted and measures rejected under Section 109(a) of	05/18/02	Sec. 109(b)
Submit to Congress a plan to screen all checked bags at U.S. airports with automated equipment, including installation and operational dates and schedules.	05/18/02	Sec. 110(d)(1)
Recommend to airport operators commercially available means to prevent unauthorized access	05/18/02	Sec. 136
Establish pilot program for screening by private entities	11/19/02	Sec. 108(a)
Deploy Federal screeners and related personnel at U.S. airports to conduct passenger and property screening.	11/19/02	Sec. 110(c)
Report to Congress on screening requirements for passengers and property being carried aboard scheduled aircraft with 60 seats or fewer, with recommendations for any necessary changes in those requirements.	11/19/02	Sec. 110(d)(2)
Ensure sufficient EDS to screen all checked baggage at U.S. airports	12/31/01	Sec. 110(b)

The agency's assumption of civil aviation security functions includes the following elements:

- TSA will enter into contracts with private security screening companies for U.S. airports and directly supervise the companies' performance of screening services. Currently, air carriers and foreign air carriers contract with private security screening companies to perform these services. TSA will also enter into agreements with air carriers to pay the costs deemed necessary by the TSA of screening services where they currently perform their own security screening of passengers and property. These agreements with air carriers will also reimburse them for their costs in

providing ground security coordinators to assist TSA in overseeing the work performed by private security screening companies at U.S. airports.

• As noted above, functions related to aviation security will be transferred from FAA to TSA. Personnel, property, records, unexpended fund balances, and related authority will also be transferred to TSA. Existing FAA orders, rules, regulations, grants, and proceedings remain in effect until modified, terminated, superseded, set aside, or revoked.

In consultation with airport and law enforcement authorities, TSA will deploy security personnel at airport secure areas, and shall consider the physical security needs of air traffic control facilities, parked aircraft, servicing equipment, fuel and supplies, adjacent automobile parking and other ground or water transportation mode access areas.

• TSA will provide to Congress its plan to screen all checked bags at U.S. airports, including installation and operational dates and schedules, by May 18, 2002.

• TSA will report to Congress, by May 18, 2002, on ATSA's optional enhanced security measures, which include providing for 911 emergency call capability on passenger aircraft and trains; providing for a uniform ID system for State and local law enforcement officers carrying weapons on aircraft or in secure areas; issuing requirements for a trusted passenger program; establishing alternative security procedures for medical products with the Food and Drug Administration; using technology for secure plane to ground threat communication; including photo and biometric imprint on all pilot licenses; using voice stress biometric technology for screening potential threats; and using instant air-ground communications. As required by statute, the performance plan, with measurable goals and objectives, will be updated annually thereafter.

• TSA may, in consultation with Congress, establish acceptable performance levels for aviation security, including screening and access control, and provide Congress with an action plan containing measurable goals and milestones by May 18, 2002.

• TSA will assess and recommend to airport operators commercially available means to prevent unauthorized access to secure areas, reviewing effectiveness of biometrics, increased access point surveillance, card/key based access systems, emergency exit monitoring, and elimination of ''piggybacking'' into secure areas by unauthorized persons by May 18, 2002.

• This six-month assessment will include a 12-month deployment strategy for available technology at Category X airports.

TSA will replace contract security screeners with its own Federally hired, trained, and tested employees on a graduated basis until TSA has deployed sufficient Federal security screeners, as well as Federal Security Managers and Federal law enforcement officers, to screen all passengers and property at required U.S. airports by November 19, 2002. TSA will provide for alcohol and controlled substance testing, as well as background and criminal history checks, for contract security screeners and TSA employees.

• TSA will assess the existence of dual use items that seem harmless, but may be used as a weapon, maintain a list of such items, and include it in screener training.

• TSA will establish a pilot program for private airport security screening companies by November 19, 2002.

• TSA will deploy sufficient Explosive Detection Systems to screen all checked baggage at U.S. airports, or will screen all checked baggage by alternative means, by December 31, 2002.

• TSA will work with airport operators to strengthen area access control points and consider biometrics/technology deployment to identify individuals.

To offset the costs of providing civil aviation security services TSA has imposed a uniform fee, the September 11th Security Fee, on certain passenger enplanements, beginning February 1, 2002. ATSA authorizes a corresponding fee on air carriers and foreign air carriers based on their calendar year 2000 costs for screening passengers and property.

Authority: Pub. L. 107–71, 115 Stat. 597 (2001); and 49 CFR 1.4.

Issued: February 15, 2002.

John Magaw,

Under Secretary of Transportation for Security.

[FR Doc. 02–4149 Filed 2–15–02; 2:25 pm]

BILLING CODE 4910–62–P

DEPARTMENT OF TRANSPORTATION

Transportation Security Administration

Assumption of Civil Aviation Security Functions and Responsibilities Under Chapter 449, Title 49, U.S.C.

AGENCY: Transportation Security Administration, DOT.

ACTION: Notice.

SUMMARY: The Transportation Security Administration (TSA) announces its assumption of civil aviation security functions and responsibilities, as provided by the Aviation and Transportation Security Act. Effective February 17, 2002, civil aviation security functions and responsibilities currently performed by the Federal Aviation Administration are transferred to the TSA. As required by the Aviation and Transportation Security Act, TSA will federalize all airport security screeners, under a schedule described in this notice.

FOR FURTHER INFORMATION CONTACT: Robert Klothe or Steven Cohen, Office of the General Counsel, Department of Transportation, 400 Seventh Street, SW., Washington, DC 20590, (202) 366–9307 (voice), (202) 366–9318 (fax).

SUPPLEMENTARY INFORMATION:

Electronic Access

An electronic copy of this document may be downloaded using a modem and suitable communications software from the Government Printing Office Electronic Bulletin Board Service at (202) 512–1661. Internet users may reach the Office of the Federal Register's home page at *http://www.nara.gov/fedreg* and the Government Printing Office's web page at *http://www.access.gpo.gov/nara.*

Internet users can access this document through the docket management system web site, *http://dms.dot.gov.* It is available 24 hours each day, 365 days each year. Please follow the instructions online for more information and help.

Background

In light of the September 11, 2001, terrorist attacks in the United States and the potential for future attacks in this country, Congress enacted the Aviation and Transportation Security Act (ATSA), Public Law 107–71, 115 Stat. 597 (November 19, 2001), which establishes the Transportation Security Administration (TSA) as an operating administration within the Department of Transportation (DOT), headed by the Under Secretary of Transportation for Security (Under Secretary). The Under Secretary took office on January 7, 2002.

Pursuant to ATSA, the TSA is responsible for security in all modes of transportation, including civil aviation under Chapter 449 of title 49, United States Code, related research and development activities, and other transportation security functions exercised by DOT. The TSA is specifically responsible for the day-to-day security screening operations for passenger air transportation and intrastate air transportation under 49 U.S.C. 44901 and 44935. This responsibility includes hiring, training, testing, and deploying or arranging for Federal security screeners, Federal security personnel, Federal law enforcement officers, and Federal Security Managers at U.S. airports. The TSA must also research, develop and deploy security equipment and programs at U.S. airports, coordinate transportation security intelligence information, coordinate transportation security efforts with Federal and State agencies, and deal with threats to transportation.

Section 101(g) of ATSA, which added section 114 to chapter 1 of title 49, United States Code, requires the Under Secretary to assume civil aviation security functions and responsibilities under chapter 449 of title 49, United States Code, by February 17, 2002, in accordance with a schedule developed by the Secretary, upon consulting with air carriers, foreign air carriers, and the Administrator of the Federal Aviation Administration (FAA). The ATSA also requires the Under Secretary to publish notice of the transfer of such security functions and responsibilities before assuming them from the FAA. This notice announces that the required consultations have taken place and that the transfer of civil aviation security functions is effective February 17, 2002. The following table contains a summary of major completed and planned activities. Additional information is provided in the text following the table.

Activity	Date accomplished or expected	Statutory reference within ATSA
Establish qualification standards for security screeners to be hired by TSA	12/19/01	Sec. 111(a)
Require screening of all checked baggage	01/18/02	Sec. 110(b)
Develop a training plan for security screeners	01/18/02	Sec. 111(a)
Issue notice for collection of passenger fees for aviation security services	01/18/02 (66 FR 67698)	Sec. 118(a)
Assume civil aviation security functions and responsibilities	02/17/02	Sec. 101(g)(1)
Implement Aviation Security Program for Charter Aircraft of 12,500 pounds or larger	02/17/02	Sec. 132(a)
Report to Congress on measures adopted and measures rejected under Section 109(a) of	05/18/02	Sec. 109(b)
Submit to Congress a plan to screen all checked bags at U.S. airports with automated equipment, including installation and operational dates and schedules.	05/18/02	Sec. 110(d)(1)
Recommend to airport operators commercially available means to prevent unauthorized access	05/18/02	Sec. 136
Establish pilot program for screening by private entities	11/19/02	Sec. 108(a)
Deploy Federal screeners and related personnel at U.S. airports to conduct passenger and property screening.	11/19/02	Sec. 110(c)
Report to Congress on screening requirements for passengers and property being carried aboard scheduled aircraft with 60 seats or fewer, with recommendations for any necessary changes in those requirements.	11/19/02	Sec. 110(d)(2)
Ensure sufficient EDS to screen all checked baggage at U.S. airports	12/31/01	Sec. 110(b)

The agency's assumption of civil aviation security functions includes the following elements:

- TSA will enter into contracts with private security screening companies for U.S. airports and directly supervise the companies' performance of screening services. Currently, air carriers and foreign air carriers contract with private security screening companies to perform these services. TSA will also enter into agreements with air carriers to pay the costs deemed necessary by the TSA of screening services where they currently perform their own security screening of passengers and property. These agreements with air carriers will also reimburse them for their costs in

providing ground security coordinators to assist TSA in overseeing the work performed by private security screening companies at U.S. airports.

• As noted above, functions related to aviation security will be transferred from FAA to TSA. Personnel, property, records, unexpended fund balances, and related authority will also be transferred to TSA. Existing FAA orders, rules, regulations, grants, and proceedings remain in effect until modified, terminated, superseded, set aside, or revoked.

In consultation with airport and law enforcement authorities, TSA will deploy security personnel at airport secure areas, and shall consider the physical security needs of air traffic control facilities, parked aircraft, servicing equipment, fuel and supplies, adjacent automobile parking and other ground or water transportation mode access areas.

• TSA will provide to Congress its plan to screen all checked bags at U.S. airports, including installation and operational dates and schedules, by May 18, 2002.

• TSA will report to Congress, by May 18, 2002, on ATSA's optional enhanced security measures, which include providing for 911 emergency call capability on passenger aircraft and trains; providing for a uniform ID system for State and local law enforcement officers carrying weapons on aircraft or in secure areas; issuing requirements for a trusted passenger program; establishing alternative security procedures for medical products with the Food and Drug Administration; using technology for secure plane to ground threat communication; including photo and biometric imprint on all pilot licenses; using voice stress biometric technology for screening potential threats; and using instant air-ground communications. As required by statute, the performance plan, with measurable goals and objectives, will be updated annually thereafter.

• TSA may, in consultation with Congress, establish acceptable performance levels for aviation security, including screening and access control, and provide Congress with an action plan containing measurable goals and milestones by May 18, 2002.

• TSA will assess and recommend to airport operators commercially available means to prevent unauthorized access to secure areas, reviewing effectiveness of biometrics, increased access point surveillance, card/key based access systems, emergency exit monitoring, and elimination of ''piggybacking'' into secure areas by unauthorized persons by May 18, 2002.

• This six-month assessment will include a 12-month deployment strategy for available technology at Category X airports.

TSA will replace contract security screeners with its own Federally hired, trained, and tested employees on a graduated basis until TSA has deployed sufficient Federal security screeners, as well as Federal Security Managers and Federal law enforcement officers, to screen all passengers and property at required U.S. airports by November 19, 2002. TSA will provide for alcohol and controlled substance testing, as well as background and criminal history checks, for contract security screeners and TSA employees.

• TSA will assess the existence of dual use items that seem harmless, but may be used as a weapon, maintain a list of such items, and include it in screener training.

• TSA will establish a pilot program for private airport security screening companies by November 19, 2002.

• TSA will deploy sufficient Explosive Detection Systems to screen all checked baggage at U.S. airports, or will screen all checked baggage by alternative means, by December 31, 2002.

• TSA will work with airport operators to strengthen area access control points and consider biometrics/technology deployment to identify individuals.

To offset the costs of providing civil aviation security services TSA has imposed a uniform fee, the September 11th Security Fee, on certain passenger enplanements, beginning February 1, 2002. ATSA authorizes a corresponding fee on air carriers and foreign air carriers based on their calendar year 2000 costs for screening passengers and property.

Authority: Pub. L. 107–71, 115 Stat. 597 (2001); and 49 CFR 1.4.

Issued: February 15, 2002.

John Magaw,

Under Secretary of Transportation for Security.

[FR Doc. 02–4149 Filed 2–15–02; 2:25 pm]

BILLING CODE 4910–62–P

Reader Aids

Federal Register

Vol. 67, No. 34

Wednesday, February 20, 2002

CUSTOMER SERVICE AND INFORMATION

Federal Register/Code of Federal Regulations	
General Information, indexes and other finding aids	**202–523–5227**
Laws	**523–5227**
Presidential Documents	
Executive orders and proclamations	**523–5227**
The United States Government Manual	**523–5227**
Other Services	
Electronic and on-line services (voice)	**523–3447**
Privacy Act Compilation	**523–3187**
Public Laws Update Service (numbers, dates, etc.)	**523–6641**
TTY for the deaf-and-hard-of-hearing	**523–5229**

ELECTRONIC RESEARCH

World Wide Web

Full text of the daily Federal Register, CFR and other publications is located at: **http://www.access.gpo.gov/nara**

Federal Register information and research tools, including Public Inspection List, indexes, and links to GPO Access are located at: **http://www.nara.gov/fedreg**

E-mail

FEDREGTOC-L (Federal Register Table of Contents LISTSERV) is an open e-mail service that provides subscribers with a digital form of the Federal Register Table of Contents. The digital form of the Federal Register Table of Contents includes HTML and PDF links to the full text of each document.

To join or leave, go to **http://listserv.access.gpo.gov** and select *Online mailing list archives, FEDREGTOC-L, Join or leave the list (or change settings);* then follow the instructions.

PENS (Public Law Electronic Notification Service) is an e-mail service that notifies subscribers of recently enacted laws.

To subscribe, go to **http://hydra.gsa.gov/archives/publaws-l.html** and select *Join or leave the list* (or change settings); then follow the instructions.

FEDREGTOC-L and **PENS** are mailing lists only. We cannot respond to specific inquiries.

Reference questions. Send questions and comments about the Federal Register system to: **info@fedreg.nara.gov**

The Federal Register staff cannot interpret specific documents or regulations.

FEDERAL REGISTER PAGES AND DATE, FEBRUARY

4869–5040 1
5041–5194 4
5195–5430 5
5431–5720 6
5721–5920 7
5921–6158 8
6159–6368 11
6369–6638 12
6639–6822 13
6823–7054 14
7055–7258 15
7259–7582 19
7583–7940 20

CFR PARTS AFFECTED DURING FEBRUARY

At the end of each month, the Office of the Federal Register publishes separately a List of CFR Sections Affected (LSA), which lists parts and sections affected by documents published since the revision date of each title.

3 CFR

Proclamations:
7521 5431
7522 5433
7523 5919
Executive Orders:
12876 6823
13227 (Amended by EO 13255) 6157
13228 (See EO 13257) 7259
13255 6157
13254 4869
13256 6823
13257 7259
Administrative Orders:
Presidential Determinations:
No. 2002–06 of January 25, 2002 5921
Memorandums:
Memorandum of February 1, 2002 5923

5 CFR

330 .....5195, 6639
332 .....5195, 7055
351 .....5195, 5196
353 5195
550 6640

7 CFR

301 .....5041, 6827
319 4873
457 5925
911 6837
927 5435
929 6843
932 5438
944 6837
948 5440
982 5442
1219 7261
1430 7056
1439 7265
1710 6369
Proposed Rules:
29 4926
928 5526
1030 7040
1219 7290

8 CFR

Proposed Rules:
3 7309
280 7309

9 CFR

50 7583
55 5925
77 7583
93 6369
94 4877
Proposed Rules:
94 4927

10 CFR

72 5934
Proposed Rules:
26 7093
50 6663
72 6203

11 CFR

106 5445
Proposed Rules:
100 6883
114 6883
117 6883

12 CFR

203 7222
701 7057
Proposed Rules:
203 7252

13 CFR

Proposed Rules:
121 6437

14 CFR

13 6364
23 5196
25 5934
39 .....4878, 4895, 4896, 5042, 5043, 5148, 5721, 5937, 6159, 6370, 6372, 6374, 6376, 6379, 6381, 6385, 6388, 6390, 6846, 6850, 6852, 6854, 6855, 6857, 6859, 6861, 6864, 7059, 7061, 7593, 7594, 7604, 7605, 7607, 7609
71 .....4898, 5044, 5198, 6161, 6641, 6642, 6643, 6644, 7065, 7066, 7067, 7068, 7069, 7070
73 6644
91 .....5888, 7538
97 .....6163, 6166
330 4899
Proposed Rules:
1 5368
21 5368
39 .....5526, 5958, 6205, 6207, 6210, 6212, 6883, 6885, 6886, 6888, 6890, 7093, 7097, 7318
43 5368
45 5368
61 5368
65 5368
71 .....5528, 5529, 5530
91 5368
255 7100

382 6892

15 CFR

909 7611

16 CFR

303 4901
Proposed Rules:
303 7104
1700 7319

17 CFR

140 5938
160 6790
240 5199

18 CFR

157 6168
Proposed Rules:
Ch. 1 6665

19 CFR

141 7070
Proposed Rules:
24 4930
123 4930
132 4930
142 4930

20 CFR

200 5723

21 CFR

10 4904
16 5446
201 4904
203 6645
205 6645
211 5046
226 5046
250 4904
290 4904
310 4904
329 4904
333 5942
341 4904
361 4904
369 4904
510 5046
514 5046
520 ....5469, 6865
522 ....5724, 6866
529 7072
530 5470
556 6866
558 ....6867, 7268
606 4904
610 4904
821 5943
900 5446
1308 7073
Proposed Rules:
868 6444
872 7620
880 5750
888 5753

22 CFR

Proposed Rules:
89 6447

23 CFR

625 6393
655 7073
Proposed Rules:
630 5532

24 CFR

5 6820
982 6820

26 CFR

1 ....4907, 5061, 5148, 5203
40 5471
602 ....5061, 5203
Proposed Rules:
1 ....5074, 5076, 5148, 7630, 7656
31 5076
301 4938

27 CFR

178 5422
Proposed Rules:
9 5756
178 5428

28 CFR

65 7269

29 CFR

4022 7076
4044 7076
Proposed Rules:
2510 5245

30 CFR

724 5203
846 5203
901 5204
917 5207
926 6395
Proposed Rules:
250 6453
260 6454

31 CFR

357 7078
591 5472

32 CFR

199 ....5477, 6408

33 CFR

117 ....4909, 5062, 5063, 5064, 6168, 6647, 7082
140 5912
151 6171
165 ....4909, 4911, 5480, 5482, 6648, 6650, 6652, 7270, 7611
334 6653
402 6869
Proposed Rules:
117 ....5076, 7110
161 5538
165 ....6666, 7321
167 5538
334 6901

36 CFR

242 5890
Proposed Rules:
242 6334
1206 5542

37 CFR

1 6075
259 5213
Proposed Rules:
201 5761

38 CFR

3 ....6870, 6872
4 6872
17 6874
21 6654
Proposed Rules:
20 4939

39 CFR

551 5215
Proposed Rules:
111 5960

40 CFR

9 6138
52 ....5064, 5152, 5170, 5485, 5725, 5727, 5729, 5952, 5953, 6130, 6148, 6410, 6655, 6658, 7272
55 5490
63 ....6792, 6968
70 5216
71 5490
81 ....6411, 7082, 7272
82 6352
105 6138
180 ....4913, 5735, 5740, 6414, 6418, 6422, 7085
194 6661
264 6792
265 6792
266 ....6792, 6968
270 ....6792, 6968
271 6792
300 ....5218, 5955, 7279, 7576, 7614
Proposed Rules:
50 7112
52 ....5078, 5552, 6153, 6456, 7323
81 ....6459, 7323
105 6145
180 ....5548, 5553
300 ....5246, 7324, 7326, 7580, 7657

41 CFR

Ch. 301 7283
300–2 7219
302–3 7219
Ch. 302 7219
302–11 ....4923, 6790

42 CFR

82 6874
Proposed Rules:
36 6998
36a 6998
136 6998
136a 6998
137 6998

43 CFR

Proposed Rules:
3809 4940

44 CFR

64 5221
65 ....5222, 5224, 5227, 5230
67 ....5232, 5234
Proposed Rules:
67 ....5246, 5249, 5251, 5254

45 CFR

2553 6875
Proposed Rules:
1611 6214
1626 6667

47 CFR

Ch. 1 5955
1 ....6172, 7287
2 ....5491, 6172
25 7287
27 5491
32 5670
43 5670
51 5670
52 6431
54 ....5670, 6435, 7287
64 5670
65 5670
69 5670
73 ....5069, 5070, 5241, 5691, 5956, 6875, 6876, 6877, 7288, 7289
90 6172
95 6172
101 7287
Proposed Rules:
1 7113
2 7113
27 7113
32 5704
36 5704
51 6902
54 7327
64 5704
73 ....4941, 5080, 5961, 6905, 7341
80 5080
90 7113
95 7113

48 CFR

Ch. 1 ....6112, 6121
2 6113
3 6120
4 6113
5 7256
9 6120
12 6120
13 ....6114, 6120
14 ....6113, 6120
15 ....6115, 6120
22 6116
25 6116
31 6120
32 6113
36 6120
42 ....6118, 6120
46 6120
51 6120
52 ....6116, 6118, 6120
1501 5070
1502 5070
1515 5070
1517 5070
1536 5070
1552 5070
1816 7617
1832 7618
1852 7617
Proposed Rules:
1509 7657
1552 7657

49 CFR

195 6436
1104 5513
1511 7926

Proposed Rules:
107.....4941, 6667
171.....4941, 6667
172.....4941, 6667
173.....4941, 6667
175.....6669
177.....4941, 6667
178.....4941, 6667
180.....4941, 6667
533.....5767
567.....5084
571.....5084
574.....5084
575.....5084

50 CFR

17.....5515
100.....5890
600.....6194, 7289
635.....6194
648 .....5241, 6194, 6877
660.....6194, 7289
679 .....5148, 5749, 6202, 6662, 6882

Proposed Rules:
Ch. I.....4940
17 .....5780, 6214, 6459, 6578, 7122
22.....7122
622.....7123
100.....6334
223.....6215
224.....6215
226.....6215, 7660
300.....6220
600 .....5558, 7341, 7342
622.....5780, 7344
635.....5780
640.....5780
648.....6479
654.....5780
660.....5962

REMINDERS

The items in this list were editorially compiled as an aid to Federal Register users. Inclusion or exclusion from this list has no legal significance.

RULES GOING INTO EFFECT FEBRUARY 20, 2002

AGRICULTURE DEPARTMENT

Agricultural Marketing Service

Hass avocado promotion, research, and information order; published 2-19-02

COMMERCE DEPARTMENT

National Oceanic and Atmospheric Administration

Practice and procedure:

Information disclosure and employee testimony in litigation not involving U.S.; CFR part removed; published 2-20-02

DEFENSE DEPARTMENT

Federal Acquisition Regulation (FAR):

Caribbean basin country end products; published 2-8-02

Commercial items in excess of simplified acquisition threshold; published 2-8-02

Contract vouchers; final submission; published 2-8-02

Contractor personnel; nondisplacement of qualified workers; Executive Order compliance; published 2-8-02

Cost accounting standards; noncompliance notification; published 2-8-02

Definitions; published 2-8-02

GENERAL SERVICES ADMINISTRATION

Federal Acquisition Regulation (FAR):

Caribbean basin country end products; published 2-8-02

Commercial items in excess of simplified acquisition threshold; published 2-8-02

Contract vouchers; final submission; published 2-8-02

Contractor personnel; nondisplacement of qualified workers; Executive Order compliance; published 2-8-02

Cost accounting standards; noncompliance notification; published 2-8-02

Definitions; published 2-8-02

NATIONAL AERONAUTICS AND SPACE ADMINISTRATION

Acquisition regulations:

Contractors; major breach of safety or security; published 2-20-02

Incremental funding and deobligations under contracts; limitation; published 2-20-02

Federal Acquisition Regulation (FAR):

Caribbean basin country end products; published 2-8-02

Commercial items in excess of simplified acquisition threshold; published 2-8-02

Contract vouchers; final submission; published 2-8-02

Contractor personnel; nondisplacement of qualified workers; Executive Order compliance; published 2-8-02

Cost accounting standards; noncompliance notification; published 2-8-02

Definitions; published 2-8-02

COMMENTS DUE NEXT WEEK

AGRICULTURE DEPARTMENT

Animal and Plant Health Inspection Service

Plant-related quarantine, foreign:

Nursery stock regulations; update; comments due by 2-26-02; published 12-28-01 [FR 01-31602]

COMMERCE DEPARTMENT

Census Bureau

Census 2000:

Cutoff dates for boundary changes recognition; comments due by 2-25-02; published 1-25-02 [FR 02-01815]

COMMERCE DEPARTMENT

National Oceanic and Atmospheric Administration

Fishery conservation and management:

Atlantic coastal fisheries cooperative management—

American lobster; comments due by 2-28-02; published 1-31-02 [FR 02-02404]

International fisheries regulations:

Pacific halibut—

Guided recreational fishery; guideline harvest levels; comments due by 2-27-02; published 1-28-02 [FR 02-02005]

ENERGY DEPARTMENT

Energy Efficiency and Renewable Energy Office

Consumer products; energy conservation program:

Test procedures—

Water heaters; comments due by 2-25-02; published 1-24-02 [FR 02-01747]

ENVIRONMENTAL PROTECTION AGENCY

Air programs:

Fuels and fuel additives—

Denver/Boulder, CO; Federal summer gasoline Reid Vapor Pressure volatility standard; relaxation; comments due by 2-25-02; published 1-24-02 [FR 02-01493]

ENVIRONMENTAL PROTECTION AGENCY

Air programs:

Fuels and fuel additives—

Denver/Boulder, CO; Federal summer gasoline Reid Vapor Pressure volatility standard; relaxation; comments due by 2-25-02; published 1-24-02 [FR 02-01494]

ENVIRONMENTAL PROTECTION AGENCY

Air programs:

Stratospheric ozone protection—

Fire suppression substitutes for ozone-depleting substances; restrictions removal; list of substitutes; comments due by 2-28-02; published 1-29-02 [FR 02-01495]

ENVIRONMENTAL PROTECTION AGENCY

Air programs:

Stratospheric ozone protection—

Fire suppression substitutes for ozone-depleting substances; restrictions removal; list of substitutes; comments due by 2-28-02; published 1-29-02 [FR 02-01496]

ENVIRONMENTAL PROTECTION AGENCY

Air programs; approval and promulgation; State plans for designated facilities and pollutants:

Various States; comments due by 2-28-02; published 1-29-02 [FR 02-02119]

ENVIRONMENTAL PROTECTION AGENCY

Air programs; approval and promulgation; State plans for designated facilities and pollutants:

Various States; comments due by 2-28-02; published 1-29-02 [FR 02-02120]

ENVIRONMENTAL PROTECTION AGENCY

Air programs; State authority delegations:

Maryland; comments due by 3-1-02; published 1-30-02 [FR 02-02230]

ENVIRONMENTAL PROTECTION AGENCY

Air programs; State authority delegations:

Maryland; comments due by 3-1-02; published 1-30-02 [FR 02-02231]

ENVIRONMENTAL PROTECTION AGENCY

Air programs; State authority delegations:

Pennsylvania; comments due by 2-28-02; published 1-29-02 [FR 02-02121]

ENVIRONMENTAL PROTECTION AGENCY

Air programs; State authority delegations:

Pennsylvania; comments due by 2-28-02; published 1-29-02 [FR 02-02122]

ENVIRONMENTAL PROTECTION AGENCY

Air programs; State authority delegations:

Pennsylvania; comments due by 3-1-02; published 1-30-02 [FR 02-02228]

ENVIRONMENTAL PROTECTION AGENCY

Air programs; State authority delegations:

Pennsylvania; comments due by 3-1-02; published 1-30-02 [FR 02-02229]

ENVIRONMENTAL PROTECTION AGENCY

Air quality implementation plans; approval and promulgation; various States:

California; comments due by 2-27-02; published 1-28-02 [FR 02-02006]

ENVIRONMENTAL PROTECTION AGENCY

Air quality implementation plans; approval and

promulgation; various States:
California; comments due by 2-27-02; published 1-28-02 [FR 02-02007]

ENVIRONMENTAL PROTECTION AGENCY

Air quality implementation plans; approval and promulgation; various States:
California; comments due by 2-27-02; published 1-28-02 [FR 02-02008]

Electronic reporting establishment; electronic records
Comment period extension and public meetings; comments due by 2-27-02; published 1-3-02 [FR 02-00109]

Hazardous waste:
State underground storage tank program approvals—
South Carolina; comments due by 2-28-02; published 1-29-02 [FR 02-02123]

FEDERAL COMMUNICATIONS COMMISSION

Common carrier services:
Individuals with hearing and speech disabilities; telecommunications relay services
Cost recovery guidelines; clarification and temporary waiver requests; comments due by 2-28-02; published 1-29-02 [FR 02-01981]
Interconnection—
Incumbent local exchange carriers broadband telecommunications services; regulatory requirements; comment request; comments due by 3-1-02; published 1-15-02 [FR 02-00903]

FEDERAL HOUSING FINANCE BOARD

Affordable Housing Program; amendments; comments due by 2-25-02; published 12-27-01 [FR 01-31569]

HEALTH AND HUMAN SERVICES DEPARTMENT

Centers for Medicare & Medicaid Services

Standards and certification:
Medicare and Medicaid programs; emergency recertification for Organ Procurement Organizations (OPOs) coverage; comments due by 2-26-02; published 12-28-01 [FR 01-31724]

HEALTH AND HUMAN SERVICES DEPARTMENT

Energy Employees Occupational Illness Compensation Program Act; implementation:
Radiation dose reconstruction methods; comments due by 3-1-02; published 2-14-02 [FR 02-03809]

INTERIOR DEPARTMENT

Indian Affairs Bureau

Economic enterprises:
Gaming on trust lands acquired after Octover 17, 1988; determination procedures; comments due by 2-25-02; published 12-27-01 [FR 01-31664]

INTERIOR DEPARTMENT

Fish and Wildlife Service

Endangered and threatened species:
Columbia basin pygmy rabbit; comments due by 2-28-02; published 2-7-02 [FR 02-02924]
Tumbling Creek cavesnail; comments due by 2-25-02; published 12-27-01 [FR 01-31306]

INTERIOR DEPARTMENT

Minerals Management Service

Outer Continental Shelf; oil, gas, and sulphur operations:
Fixed and floating platforms; documents incorporated by reference; comments due by 2-25-02; published 12-27-01 [FR 01-31723]
Pressure Vessel Inspection Code; incorporation by reference; comments due by 2-25-02; published 12-27-01 [FR 01-31710]

INTERIOR DEPARTMENT

Surface Mining Reclamation and Enforcement Office

Permanent program and abandoned mine land reclamation plan submissions:
Pennsylvania; comments due by 2-25-02; published 1-25-02 [FR 02-01945]

INTERIOR DEPARTMENT

National Indian Gaming Commission

Management contract provisions:
Minimum internal control standards; comments due by 2-25-02; published 12-26-01 [FR 01-30788]
Minimum internal control standards; correction; comments due by 2-25-02; published 1-24-02 [FR C1-30788]

POSTAL SERVICE

Domestic Mail Manual
Rate, fee, and classification changes; correction; comments due by 3-1-02; published 2-8-02 [FR 02-03135]

Domestic Mail Manual;
Rate, fee, and classification changes; comments due by 3-1-02; published 1-30-02 [FR 02-02177]

SECURITIES AND EXCHANGE COMMISSION

Securities:
Qualified purchaser; definition; comments due by 2-25-02; published 12-27-01 [FR 01-31742]

SMALL BUSINESS ADMINISTRATION

HUBZone program:
Miscellaneous amendments; comments due by 2-27-02; published 1-28-02 [FR 02-01834]

TRANSPORTATION DEPARTMENT

Coast Guard

Drawbridge operations:
Illinois; comments due by 2-25-02; published 12-27-01 [FR 01-31842]

Ports and waterways safety:
Boston Harbor et al., MA; safety and security zones; comments due by 2-28-02; published 1-18-02 [FR 02-01358]
Kennebec River, Bath, Maine; Bath Iron Works; safety zone; comments due by 2-25-02; published 12-26-01 [FR 01-31658]

TRANSPORTATION DEPARTMENT

Airline service quality performance reports:
Causes of airline delays and cancellations; reporting requirements modification; comments due by 2-25-02; published 12-27-01 [FR 01-31725]

TRANSPORTATION DEPARTMENT

Federal Aviation Administration

Airworthiness directives:
Boeing; comments due by 2-25-02; published 1-9-02 [FR 02-00457]

TRANSPORTATION DEPARTMENT

Federal Aviation Administration

Airworthiness directives:
Dornier; comments due by 3-1-02; published 1-30-02 [FR 02-01821]

TRANSPORTATION DEPARTMENT

Federal Aviation Administration

Airworthiness directives:
Hamilton Sundstrand; comments due by 2-26-02; published 12-28-01 [FR 01-31328]

TRANSPORTATION DEPARTMENT

Federal Aviation Administration

Airworthiness directives:
McDonnell Douglas; comments due by 2-25-02; published 1-9-02 [FR 02-00458]
MD Helicopters, Inc.; comments due by 2-25-02; published 12-27-01 [FR 01-31556]

TRANSPORTATION DEPARTMENT

Federal Aviation Administration

Airworthiness directives:
Rolls-Royce plc.; comments due by 3-1-02; published 12-31-01 [FR 01-31699]

TRANSPORTATION DEPARTMENT

Federal Aviation Administration

Airworthiness standards:
Special conditions—
Eclipse Aviation Corp. Model 500 airplane; comments due by 2-28-02; published 1-29-02 [FR 02-02143]

Class B airspace; comments due by 3-1-02; published 12-31-01 [FR 01-32007]

TRANSPORTATION DEPARTMENT

Federal Railroad Administration

Railroad workplace safety:
Body belts use as components of personal fall arrest systems prohibited; and railroad bridge workers; comments due by 3-1-02; published 1-15-02 [FR 02-00723]

TRANSPORTATION DEPARTMENT

National Highway Traffic Safety Administration

Fuel economy standards:
Light trucks; 2004 model year; comments due by 2-25-02; published 1-24-02 [FR 02-01675]

TRANSPORTATION DEPARTMENT

Saint Lawrence Seaway Development Corporation

Seaway regulations and rules:

Ballast water; Great Lakes shipping industry codes compliance; comments due by 2-25-02; published 1-24-02 [FR 02-01752]

TRANSPORTATION DEPARTMENT

Transportation Security Administration

Passenger civil aviation security service fees; imposition and collection; comments due by 3-1-02; published 12-31-01 [FR 01-32254]

TREASURY DEPARTMENT

Customs Service

Air commerce:

Passenger flights in foreign air transportation to the United States; passenger and crew manifests requirements; comments due by 3-1-02; published 12-31-01 [FR 01-32034]

TREASURY DEPARTMENT

Internal Revenue Service

Excise taxes:

Liability for insurance premium; comments due by 2-26-02; published 1-7-02 [FR 02-00325]

Income Taxes:

Consolidated return regulations—

Non-applicability of section 357(c) in consolidated group; comments due by 2-28-02; published 11-14-01 [FR 01-28409]

Income taxes:

New markets tax credit; cross-reference; comments due by 2-25-02; published 12-26-01 [FR 01-31529]

TREASURY DEPARTMENT

Currency and foreign transactions; financial reporting and recordkeeping requirements:

Bank Secrecy Act; implementation—

Nonfinancial trades or businesses; reporting requirements; comments due by 3-1-02; published 12-31-01 [FR 01-31847]

Bank Secrecy Act; regulations—

Suspicious transactions; reporting by brokers and dealers; comments due by 3-1-02; published 12-31-01 [FR 01-31850]

VETERANS AFFAIRS DEPARTMENT

Adjudication; pensions, compensation, dependency, etc.:

Filipino veterans' benefits improvements; comments due by 2-25-02; published 12-27-01 [FR 01-31828]

LIST OF PUBLIC LAWS

This is a continuing list of public bills from the current session of Congress which have become Federal laws. It may be used in conjunction with ''P L U S'' (Public Laws Update Service) on 202–523–6641. This list is also available online at *http://www.nara.gov/fedreg/plawcurr.html*.

The text of laws is not published in the **Federal Register** but may be ordered in ''slip law'' (individual pamphlet) form from the Superintendent of Documents, U.S. Government Printing Office, Washington, DC 20402 (phone, 202–512–1808). The text will also be made available on the Internet from GPO Access at *http://www.access.gpo.gov/nara/nara005.html*. Some laws may not yet be available.

H.J. Res. 82/P.L. 107–143

Recognizing the 91st birthday of Ronald Reagan. (Feb. 14, 2002; 116 Stat. 17)

S. 737/P.L. 107–144

To designate the facility of the United States Postal Service located at 811 South Main Street in Yerington, Nevada, as the ''Joseph E. Dini, Jr. Post Office''. (Feb. 14, 2002; 116 Stat. 18)

S. 970/P.L. 107–145

To designate the facility of the United States Postal Service located at 39 Tremont Street, Paris Hill, Maine, as the ''Horatio King Post Office Building''. (Feb. 14, 2002; 116 Stat. 19)

S. 1026/P.L. 107–146

To designate the United States Post Office located at 60 Third Avenue in Long Branch, New Jersey, as the ''Pat King Post Office Building''. (Feb. 14, 2002; 116 Stat. 20)

Last List Feburary 14, 2002

Public Laws Electronic Notification Service (PENS)

PENS is a free electronic mail notification service of newly enacted public laws. To subscribe, go to *http://hydra.gsa.gov/archives/publaws-l.html* or send E-mail to **listserv@listserv.gsa.gov** with the following text message:

SUBSCRIBE PUBLAWS-L Your Name.

Note: This service is strictly for E-mail notification of new laws. The text of laws is not available through this service. **PENS** cannot respond to specific inquiries sent to this address.