Hampton Drive, Capitol Heights, MD 20743. U.S. Postal Service first-class mail, Express Mail, and Priority Mail should be addressed to 445 12th Street, SW, Washington, DC 20554. All filings must be addressed to the Commission's Secretary, Office of the Secretary, Federal Communications Commission, Washington, DC 20554. In addition to filing comments with the FCC, interested parties should serve the petitioner, or its counsel or consultant, as follows: George R. Borsari, Jr., Borsari & Paxson, 4000 Albemarle Street, NW, Suite 100, Washington, DC (Counsel for High Mountain Broadcasting Corporation).

**FOR FURTHER INFORMATION CONTACT:** Pam Blumenthal, Media Bureau, (202) 418–1600.

**SUPPLEMENTARY INFORMATION:** This is a synopsis of the Commission's Notice of Proposed Rule Making, MB Docket No. 02–178, adopted June 28, 2002, and released July 5, 2002. The full text of this document is available for public inspection and copying during regular business hours in the FCC Reference Information Center, Portals II, 445 12th Street, SW, Room CY–A257, Washington, DC, 20554. This document may also be purchased from the Commission's duplicating contractor, Qualex International, Portals II, 445 12th Street, SW, Room CY–B402, Washington, DC, 20554, telephone 202–863–2893, facsimile 202–863–2898, or via-e-mail *qualexint@aol.com.*

Provisions of the Regulatory Flexibility Act of 1980 do not apply to this proceeding.

Members of the public should note that from the time a Notice of Proposed Rule Making is issued until the matter is no longer subject to Commission consideration or court review, all *ex parte* contacts are prohibited in Commission proceedings, such as this one, which involve channel allotments. *See* 47 CFR 1.1204(b) for rules governing permissible *ex parte* contacts.

For information regarding proper filing procedures for comments, see 47 CFR 1.415 and 1.420.

### List of Subjects in 47 CFR Part 73

Digital television broadcasting, Television.

For the reasons discussed in the preamble, the Federal Communications Commission proposes to amend 47 CFR part 73 as follows:

## PART 73—RADIO BROADCAST SERVICES

1. The authority citation for part 73 continues to read as follows:

**Authority:** 47 U.S.C. 154, 303, 334 and 336.

**§73.622 [Amended]**

2. Section 73.622(b), the Table of Digital Television Allotments under West Virginia is amended by removing DTV channel 48 and adding DTV channel 8 at Lewisburg.

Federal Communications Commission.

**Barbara A. Kreisman,**

*Chief, Video Division, Media Bureau.*

[FR Doc. 02–17486 Filed 7–11–02; 8:45 am]

**BILLING CODE 6712–01–P**

---

## DEPARTMENT OF TRANSPORTATION

## National Highway Traffic Safety Administration

## 49 CFR Part 571

**[Docket No. NHTSA–2002–12538]**

**RIN 2127–AI84**

## Federal Motor Vehicle Safety Standards; Low Speed Vehicles; Notice of Proposed Rulemaking

**AGENCY:** National Highway Traffic Safety Administration (NHTSA), Department of Transportation (DOT).

**ACTION:** Notice of proposed rulemaking.

**SUMMARY:** This document responds to a petition for rulemaking from General Motors Corporation concerning low-speed vehicles. A low-speed vehicle is defined as a four-wheeled vehicle, other than a truck, whose maximum speed is between 20 and 25 miles per hour. The petitioner requested that the agency initiate rulemaking to amend the Federal motor vehicle safety standard for low-speed vehicles to require those vehicles to bear a label identifying safety hazards associated with the operation of low-speed vehicles in mixed traffic, *i.e.,* on roads used by regular vehicles, and to be equipped with additional conspicuity features to make low-speed vehicles more visible to other vehicles.

The agency is granting both requests. In this document, the agency is proposing to amend the standard to require low-speed vehicles to bear a warning label to ensure that drivers of those vehicles are alerted to the hazards associated with the operation of low-speed vehicles in mixed traffic. The agency is also proposing that low-speed vehicles be equipped with reflex reflectors or retroreflective conspicuity sheeting, a slow-moving vehicle emblem, and headlamps, taillamps, and side marker lamps that are illuminated while the low-speed vehicle is being operated to enhance their conspicuity.

**DATES:** You should submit your comments early enough to ensure that Docket Management receives them not later than September 10, 2002.

**ADDRESSES:** You may submit your comments in writing to: Docket Management, Room PL–401, 400 Seventh Street, SW., Washington, DC 20590. Alternatively, you may submit your comments electronically by logging onto the Docket Management System (DMS) Web site at *http://dms.dot.gov.* Click on ''Help & Information'' or ''Help/Info'' to view instructions for filing your comments electronically. Regardless of how you submit your comments, you should mention the docket number of this document.

**FOR FURTHER INFORMATION CONTACT:** For technical and policy issues, you may call Richard Van Iderstine, Office of Crash Avoidance Standards, Visibility and Injury Prevention Division (Telephone: 202–366–2720, Fax: 202–493–2739).

For legal issues, you may call Dion Casey, Office of Chief Counsel (Telephone: 202–366–2992, Fax: 202–366–3820).

You may send mail to either of these officials at National Highway Traffic Safety Administration, 400 Seventh Street, SW., Washington, DC 20590.

**SUPPLEMENTARY INFORMATION:**

### Table of Contents

I. Background
II. Petition
III. Discussion and Analysis
  A. Authority to Regulate Anticipated Safety Problems
  B. Safety Problem
IV. Agency Proposal
  A. Summary of the Proposal
  B. Warning Label
  C. Reflex Reflectors or Retroreflective Sheeting
  D. Slow Moving Vehicle Emblem
  E. Side Marker Lamps
  F. Headlamps, Taillamps, and Side Marker Lamps Illuminated While LSV is Being Operated
  G. Notifying State Agencies and Monitoring LSV Usage
  H. Questions on this Proposal
  I. Lead Time
V. Costs
VI. Benefits
VII. Regulatory Analyses

### I. Background

In the late 1990s, there was a growing public interest in using golf cars [1] to

[1] These vehicles, referred to variously as ''golf cars,'' ''golf carts,'' or ''neighborhood electric vehicles'' (NEVs), offer a variety of advantages. They are low-cost and energy efficient. Also, since many of these vehicles are electric-powered, they provide quieter transportation that does not pollute the air of the communities in which they are operated.

make short trips for shopping, social, and recreational purposes, primarily within retirement or other planned communities with golf courses. At the time, 12 states had passed legislation authorizing local jurisdictions to permit general on-road use of these vehicles, subject to speed and/or operational limits.[2] A majority of these states conditioned the on-road use of golf cars upon their being equipped with specified safety equipment.

However, the increased use of golf cars on public roads had resulted in several deaths and numerous serious injuries. By 1998, NHTSA estimated that there were an average of 3 deaths and 222 injuries per year as a result of on-road crashes involving golf cars.[3]

In response, NHTSA published a final rule establishing Federal Motor Vehicle Safety Standard No. 500, ''Low-Speed Vehicles.'' (63 FR 33193, June 17, 1998). A ''low-speed vehicle'' is defined as a four-wheeled motor vehicle, other than a truck, whose maximum speed is between 20 and 25 miles per hour. (49 CFR 571.3).[4] Standard No. 500 requires an LSV to be equipped with headlamps, front and rear turn signal lamps, tail lamps, stop lamps, reflex reflectors, exterior and/or interior mirrors, a parking brake, a windshield, a Vehicle Identification Number (VIN), and a seat belt assembly at each designated seating position. (49 CFR 571.500). LSVs do not have to comply with any other Federal motor vehicle safety standards (FMVSSs).

At the time of the final rule, NHTSA anticipated that sales of LSVs would grow, and, as a result, deaths and serious injuries resulting from crashes involving LSVs would occur.[5] The agency also committed to monitor the safety record of LSVs as their use increased, and to consider whether the requirements of Standard No. 500 meet the anticipated safety needs of LSV users.

NHTSA notes that in a September 1, 2000 **Federal Register** notice[6] responding to petitions for reconsideration of the final rule establishing Standard No. 500, the agency decided to treat several of the petitions as petitions for rulemaking. The agency stated: ''We will begin to develop appropriate performance specifications for LSVs, with the intent of proposing and adopting them.''[7]

The agency is not proposing any performance specifications in this document because of time considerations. As noted in the GM petition, some State ZEV mandates, including California's, will take effect this year, potentially causing a rapid increase in the number of LSVs operated on public roadways. In order to address this situation, the agency needed to propose a rule with requirements that could be implemented quickly and easily. The agency believes that the best way to do that is by requiring LSVs to be equipped with additional conspicuity features since such features can be added relatively quickly and easily. However, the agency is continuing to develop performance specifications for LSVs and remains committed to proposing such specifications in the future.

## II. Petition

On January 9, 2002, the agency received a petition from General Motors Corporation (GM). GM requested that the agency amend Standard No. 500 to require all low-speed vehicles to be equipped with a label identifying safety hazards associated with the operation of low-speed vehicles in mixed traffic, and additional conspicuity features, such as paint color/markings or roof flags, to make low-speed vehicles more visible to other vehicles. GM also requested that the agency take the following steps related to the safety of LSVs:

(1) Notify state governmental agencies with responsibility for traffic safety of the potential risks associated with increased operation of LSVs on public roadways where they will potentially interact with conventional vehicles at substantial speeds and encourage those state agencies to consider appropriate measures to reduce the potential for harm.

(2) Monitor closely any increased usage of LSVs on public roads for the incidence of collisions and resulting injuries to determine if stronger measures should be incorporated in FMVSS 500 in the future to avoid any unreasonable risk to safety.

In support of its petition, GM noted that LSVs, with a top speed of 25 mph, move much more slowly than conventional motor vehicles.[8] In addition, because they have a much less substantial structure than conventional motor vehicles and thus less crashworthy, safety concerns necessarily arise when LSVs are operated in mixed traffic, *i.e.,* with larger and faster motor vehicles.

GM also noted that in the 1998 final rule establishing Standard No. 500, NHTSA concluded that data available at that time did not support a requirement that LSVs meet the same safety requirements as conventional motor vehicles. The agency reasoned that the volume of LSVs was very small and that the natural market for LSVs seemed to be in places with controlled operating environments, such as gated or planned communities, typically built near golf courses. In addition, at that time the State of California, the largest likely market for LSVs, generally permitted LSVs on public roads only in localities that had adopted golf cart transportation plans, including separate golf cart lanes. At that time, only a few localities had done so.

In its petition, GM stated that circumstances have changed in two relevant ways since the final rule was issued:

> First, the volume of NEVs [neighborhood electric vehicles] is growing substantially as a result of new regulations promulgated in several states. Specifically, NEVs qualify as zero emission vehicles [ZEVs] under state regulations that, if implemented, would mandate that vehicles with no tailpipe emissions be produced and sold as a condition to selling regular cars and trucks in the states that adopt the mandate. Known as the ZEV mandate, this requirement originated in California and is also under consideration in Massachusetts, New York, and Vermont. GM believes that the volume of NEVs in California alone will increase many fold from the current low levels—perhaps to as many as 50,000 units—by the end of 2002 and grown even higher beyond that. To the extent the Northeast states adopt and implement this mandate, the numbers will increase proportionately, even though these states have many fewer operating environments well suited to NEVs. In all four states, the growth in NEV volume will be far greater under the ZEV mandate than natural market forces would foster in the absence of these mandates.

[2] These states were Arizona, California, Colorado, Florida, Georgia, Illinois, Iowa, Minnesota, Nevada, New Mexico, Texas, and Wyoming.

[3] (63 FR 33206, June 17, 1998). The deaths and injuries were estimated for the years 1993 through 1998. Most golf cars are not low speed vehicles as defined in 49 CFR 571.3 because their maximum speed typically is less than 20 mph. However, NHTSA used crash data for golf cars in the final rule because the agency did not have any crash data on low speed vehicles, and because, with the exception of their speed capability, golf cars and LSVs are similar in design.

[4] As noted above, most golf cars are not LSVs because their maximum speed typically is less than 20 mph.

[5] NHTSA does not have any evidence of the number of deaths and injuries that have resulted from crashes between LSVs and conventional motor vehicles since 1998. This is primarily because many States do not require LSVs to be registered as motor vehicles. Thus, NHTSA had no way to track LSVs. The agency has requested that the American Association of Motor Vehicle Administrators (AAMVA), which represents State motor vehicle and law enforcement officials, encourage States to require LSVs to be registered as motor vehicles.

[6] 65 FR 53219.

[7] 65 FR 53221.

[8] GM uses the phrases ''standard vehicles,'' ''regular vehicles,'' and ''conventional vehicles'' to refer to motor vehicles other than LSVs, i.e., motor vehicles that are subject to the relevant Federal motor vehicle safety standards. In this document, the agency will refer to these motor vehicles as ''conventional vehicles.''

Second, states that are likely to experience this proliferation of NEVs have not adopted the prudent restrictions that formerly limited LSVs to separated lanes on roads specifically designated for LSV use as part of specific, locally adopted golf cart transportation plans. In California, a state law enacted in 1999 (the year after NHTSA adopted the current rule) provides that LSVs may be operated on any roads with speed limits up to 35 mph, unless state or local regulators decide to impose tighter restrictions on specific roads.[9] A similar law was passed last year in New York. We are aware of no restrictions that bar LSVs from any roads in Massachusetts or Vermont. Traffic safety statistics show that 48% of vehicle accidents (other than those involving pedestrians and cyclists) occur on roads with posted speeds of 35 mph or less. The risk of injury to LSV occupants is, of course, substantially affected by the differences in speed and mass between the LSV and the other crash vehicle. In a crash between an LSV (with a top speed of 25 mph) and a conventional vehicle traveling at least 10 mph faster, for example, the energy contributed to the crash by the conventional vehicle, ignoring mass difference, will be at minimum nearly 100% greater than the energy contributed by the LSV. When we then take account of the very large mass differences between LSVs and standard vehicles, together with the fact that the actual speed of conventional vehicles on these roads will very often exceed 35 mph, the risks of severe injury or death to LSV occupants grow even larger.

GM claimed that these two new circumstances combine to create a sharply increased risk of injury for LSV occupants unless NHTSA adopts measures to mitigate the risk. GM admitted that it cannot precisely estimate the magnitude of the increased risk for two reasons: (1) because the LSV population is currently small, real world crash statistics involving LSVs are sparse; and (2) it is still too early to know the effect of the state law mandates on the number of LSVs sold. However, GM stated that ''it is clear that a real basis for concern now exists and that the increased risk will be discernible unless effective measures are promptly taken.''

To mitigate the increased risk described above, GM requested that the agency amend Standard No. 500 to require all LSVs to be equipped with a label reading as follows:

**WHEN OPERATING VEHICLE ON PUBLIC ROADS**

THIS VEHICLE OFFERS MUCH LESS CRASH PROTECTION THAN A REGULAR CAR, VAN, OR TRUCK. THIS MEANS A HIGHER RISK OF INJURY OR DEATH IN COLLISIONS, EVEN AT LOW SPEEDS. The higher the speed of the traffic around you, the higher the risk of injury.

**To reduce these risks**:

1. Avoid roads with regular traffic, even if the speed limit is low.
2. Whenever possible, stay on roads and lanes limited to low speed vehicles.
3. Wear your safety belt at all times.
4. Avoid operating at night, because your vehicle may be hard for others to see.
5. Never drink and drive.

And, to help avoid rollovers, SLOW DOWN BEFORE MAKING SHARP TURNS.

GM also requested that the agency amend Standard No. 500 to require LSVs to be equipped with additional conspicuity features.[10] GM suggested that the agency require the canopy of LSVs to be painted a certain color, such as bright yellow or chartreuse/neon green, require LSVs to display a colorful flag or banner elevated above the roofline, and/or require LSVs to be equipped with additional plastic reflectors or reflecting tape.

Finally, GM urged the agency to issue these amendments as soon as possible because thousands of additional LSVs could be purchased in the next year or two in at least four states. GM also requested that the agency implement a short phase-in period for these new requirements.

## III. Discussion and Analysis

### *A. Authority To Regulate Anticipated Safety Problems*

In the final rule establishing Standard No. 500, NHTSA made it clear that it has the authority to regulate anticipated as well as current safety problems. The agency stated:

NHTSA observes that its authority is preventive in nature. Congress has charged it with issuing standards to protect the public

[9] GM claimed: ''The effect of the California law change is to allow LSVs to use the vast majority of (and in many cases virtually all) non-freeway roads in major California cities such as Los Angeles. This includes major urban and suburban thoroughfares on which vehicles routinely travel 40–50–60 mph notwithstanding posted speed limits of 30–35 mph. The California Highway Patrol foresaw the concern we are raising in its 1999 study on golf cart transportation plans. On page 13, that study states, 'Part of the success of the Palm Desert and Sun City Roseville programs is the constant attention to ensuring safety by separating golf carts from other traffic and pedestrians via lane striping and other measures. Safety may be compromised should programs deviate from this practice and * * * allow golf carts to mix with vehicular traffic on roadways with a speed limit of more than 25 mph. * * *' California Highway Patrol Report to the Legislature, Golf Cart Transportation Plans in California, at 13 (August 1999).''

[10] Currently, Standard No. 500 requires LSVs to be equipped with reflex reflectors: one red on each side of the LSV as far to the rear as practicable, and one red on the rear of the LSV.

against ''unreasonable risk'' of crashes and of deaths and injuries resulting from crashes. 49 U.S.C. 30102(8) and 30111(a). This means that the existence of a risk is sufficient to justify the issuance of standards. If the occurrence of deaths and injuries is reasonably anticipated, NHTSA need not wait until they actually begin to occur in large numbers before taking action to prevent them.

(63 FR 33206, June 17, 1998).

The agency also made it clear that it intended to track any safety problems resulting from the use of LSVs and, if warranted, adjust the standard:

NHTSA will monitor the safety record of LSVs as the use of those vehicles increases. The agency will also consider whether Standard No. 500 meets the anticipated safety needs of LSV users.

(63 FR 33212).

NHTSA believes that it is reasonable to anticipate deaths and injuries resulting from crashes involving LSVs for the following reasons. First, as noted in the GM petition, more States are permitting the operation of LSVs. Second, as explained below, most of these States are not limiting LSV operation to controlled environments or to separate, marked traffic lanes. Instead, they are permitting the operation of LSVs on public roads with speed limits up to 35 mph. Thus, LSVs will be operated in a mixed traffic environment, with much heavier, faster, and aggressive conventional motor vehicles. Third, LSVs offer less crash protection than conventional motor vehicles.

NHTSA does not have any current national sales figures for LSVs. However, Global Electric Motorcars (GEM), the largest U.S. LSV manufacturer, produced more than 5,000 LSVs in 2000.[11] Moreover, NHTSA expects LSVs to be used to meet State Zero Emission Vehicle (ZEV) mandates that, if implemented, would require vehicles with no tailpipe emissions to be produced and sold as a condition of selling conventional motor vehicles in the States that adopt these regulations. Many LSVs would qualify as ZEVs because they are fully electric vehicles powered by batteries. Currently, ZEV mandates are being considered in California, Massachusetts, and New York. In its petition GM stated that if these regulations are implemented, ''GM believes that the volume of [LSVs] in California alone will increase many fold from the current low levels '' to perhaps as many as 50,000 units ''by the end of 2002 and grow even higher beyond that.''

*B. Safety Problem*

In the 1998 final rule, the agency estimated that there were an average of 3 deaths and 222 injuries per year as a result of on-road crashes involving golf cars.[12] As noted above, golf cars are not LSVs, as defined in 49 CFR 571.3, because their maximum speed typically is less than 20 mph. However, NHTSA used crash data for golf cars in the final rule because the agency did not have any crash data on low speed vehicles, and because, with the exception of their speed capability, golf cars and LSVs are similar in design.

At the time of the final rule, NHTSA anticipated that sales of LSVs would grow, and, as a result, deaths and serious injuries resulting from crashes involving LSVs would occur. As noted above, the agency does not have any information on the number of deaths and fatalities from crashes involving LSVs since 1998. The agency requests comment on this issue.

NHTSA observed in the final rule that it does not have the authority to prescribe the conditions under which LSVs are operated on the public roads; this is the prerogative of State and local jurisdictions. As noted in the GM petition, the State ZEV mandates that have been enacted since the final rule was published probably will substantially increase the sales of LSVs. The agency's review of State laws also indicates that, since the final rule was published, fifteen additional States have enacted laws allowing operation of LSVs on public roads.[13] Those States, the roads on which operation of LSVs is permitted, and the required safety equipment, are listed in the table below. Thirteen of the States specifically allow operation of LSVs on public roads with a posted speed limit of 35 mph or less. One State permits operation of LSVs on public roads with a posted speed limit of 40 mph or less.

| State | Roads on which operation is permitted | Required safety equipment |
|---|---|---|
| Arizona | Roadways with posted speed limit of 35 mph or less | Headlamps, tail lamps, reflectors, stop lamps, mirror, brakes, and a notice of operational restrictions permanently attached to or painted on the vehicle in a location in clear view of the driver. |
| Arkansas | Private and public roadways designated by local government to travel to and from a residence to a golf course. | None. |
| California | Roadways with posted speed limit of 35 mph or less, unless State or local authorities impose restrictions. | Must conform to FMVSS No. 500. Local government may require additional safety devices. |
| Colorado | Private and public roadways designated by local government. | Headlamps, tail lamps, reflectors, stop lamps, mirror, brakes, and triangular slow-moving vehicle emblem. |
| Connecticut | Private and public roadways (not highways) designated by local government. | Local government may require safety devices. |
| Florida | Roadways with posted speed limit of 35 mph or less | Headlamps, stop lamps, turn signal lamps, tail lamps, reflex reflectors, parking brakes, rearview mirrors, windshields, seat belts, and VIN. |
| Georgia | Private and public roadways designated by local government. | Must comply with motor vehicle equipment requirements. |
| Hawaii | Roadways with posted speed limit of 35 mph or less | Must display triangular slow moving vehicle emblem and a notice of the vehicle's operational restrictions, and conform to FMVSS No. 500. |

[11] ''DaimlerChrysler Corporation to Sell Zero-Emission Neighborhood Electric Vehicles,'' October 23, 2000, available at *http://www.gemcar.com/*.

[12] 63 FR 33206. The deaths and injuries were estimated for the years 1993 through 1998.

[13] As noted above, the twelve states that permitted operation of LSVs on public roads at the time the final rule was published were Arizona, California, Colorado, Florida, Georgia, Illinois, Iowa, Minnesota, Nevada, New Mexico, Texas, and Wyoming. The fifteen states that have enacted laws permitting operation of LSVs on public roads since the final rule was published are Arkansas, Connecticut, Hawaii, Kansas, Maine, Maryland, Michigan, New York, North Carolina, North Dakota, Oklahoma, Oregon, South Carolina, Virginia, and Wisconsin.

| State | Roads on which operation is permitted | Required safety equipment |
|---|---|---|
| Illinois | Roadways designated by local government | Steering apparatus, rearview mirror, front and rear red reflectorized warning devices, slow moving vehicle emblem, headlight, brake lights, and turn signals. |
| Iowa | Roadways with posted speed limit of 35 mph or less | Must conform to FMVSS No. 500. |
| Kansas | Roadways with posted speed limit of 40 mph or less | Must conform to FMVSS No. 500. |
| Maine | Roadways with posted speed limit of 35 mph or less | Must conform to FMVSS No. 500. |
| Maryland | In Allegany County only, to cross highways for continued access to any portion of a golf course. | None. |
| Michigan | Roadways with posted speed limit of 35 mph or less | Headlamps, front and rear turn signal lamps, tail lamps, stop lamps, reflex reflectors, exterior mirror mounted on the driver's side of the vehicle and either an exterior mirror mounted on the passenger's side of the vehicle or an interior mirror, parking brake, windshield, VIN, and seat belt assemblies at each designated seating position. |
| Minnesota | Roads designated by local government | Slow moving vehicle emblem and a rear view mirror. |
| Nevada | Roadways with posted speed limit of 35 mph or less | Headlamps, tail lamps, reflectors, stop lamps, mirror, and brakes. |
| New Mexico | Private and public roadways designated by local government. Carts may not be operated on state highways. | A slow moving vehicle emblem or flashing yellow light. |
| New York | Public highways with posted speed limit of 35 mph or less | Must conform to FMVSS No. 500. |
| North Carolina | Roadways with posted speed limit of 35 mph or less | Headlamps, stop lamps, turn signal lamps, tail lamps, reflex reflectors, parking brakes, rearview mirrors, windshields, windshield wipers, speedometer, seat belts, and VIN. |
| North Dakota | Roadways with posted speed limit of 35 mph or less | Headlamps, front and rear turn signal lamps, tail lamps, stop lamps, reflex reflectors, one red reflector on the rear, brakes, parking brake, windshield, VIN, safety belt installed at each designated seating position, exterior mirror mounted on the operator's side of the vehicle, and either an exterior mirror mounted on the passenger's side of the vehicle or an interior rearview mirror. |
| Oklahoma | Roadways with posted speed limit of 35 mph or less | Must conform to FMVSS No. 500. |
| Oregon | Roadways with posted speed limit of 35 mph or less, but local governments may allow operation on city streets or county roads with posted speed limit of more than 35 mph. | None. |
| South Carolina | Secondary highways and streets within 2 miles of residence during daylight hours. | None. |
| Texas | Private and public roadways designated by local government. | Slow-moving vehicle emblem. |
| Virginia | Roadway between residence and golf course if the trip would not be longer than one-half mile in either direction, and the speed limit on the road is no more than 35 mph. | Slow-moving vehicle emblem. |
| Wisconsin | On public roadways designated by local government to and from a golf course if the distance is one mile or less. | Local government may require reflective devices. |
| Wyoming | Public streets and roadways designated by local government. | Local government may require safety devices. |

In promulgating the final rule establishing Standard No. 500, NHTSA encouraged the States to limit the operation of LSVs to controlled environments, such as gated communities, or, if the States permitted the operation of LSVs on public roads with conventional vehicles, would require LSVs to be operated only in separate, designated lanes. The agency stated:

> The driving environment should be appropriate to the vehicle and its characteristics. Limitation of LSV use to low-speed city and suburban streets is necessary, but [does] not eliminate the safety risks.

(63 FR 33208). The agency then described the operating environment in the City of Palm Desert (California) and urged state and local officials to adopt similar requirements:

> The City of Palm Desert permits on-road use of golf cars in the same lanes as passenger cars and other larger motor vehicles in speed zones posted for speeds up to 25 miles per hour. In speed zones posted for speeds over 25 miles per hour, golf cars may be operated on-road only if there is a lane designated for their use and if the golf car is, in fact, operated within that lane.
>
> * * * * *
>
> NHTSA recognizes that not all operating environments may be as controlled as that of the City of Palm Desert. The agency encourages other states and municipalities to study the features of the City of Palm Desert's plan, and to adopt those features to the extent practicable.

(63 FR 33208).

Based on the above table, the agency notes that the States have not adopted requirements limiting the operation of LSVs to controlled environments. On the contrary, the States seem to be expanding the environment in which they are permitting the operation of LSVs. For example, at the time of the 1998 final rule, California, Iowa, and Nevada permitted LSVs to be operated only on public and private roadways designated by local government. However, in 1999, California enacted a law permitting LSVs to be operated on

any road with a posted speed limit of 35 mph or less, unless State or local authorities impose restrictions; and in 1999 and 2000, Nevada and Iowa, respectively, enacted laws permitting LSVs to be operated on any road with a posted speed limit of 35 mph or less. In 1998, Florida permitted LSVs to be operated only on private and public roadways designated by local governments and in self-contained retirement communities. Currently, however, Florida permits LSVs to be operated on streets where the posted speed limit is 35 mph or less.

Moreover, many States permit LSVs to cross roadways with a posted speed limit greater than 35 mph. For example, Arizona, California, Florida, Hawaii, Iowa, Michigan, Nevada, New York, North Carolina, North Dakota, and Oklahoma permit LSVs to cross roadways with a posted speed limit in excess of 35 mph. Kansas permits LSVs to cross roadways with a posted speed limit in excess of 40 mph.

As noted in the 1998 final rule, the operation of LSVs in an environment with heavier, faster moving vehicles raises obvious safety concerns. Because LSVs are much lighter than conventional vehicles and are not subject to the same Federal motor vehicle safety standards, they are less crashworthy than conventional vehicles. Thus, LSV drivers, especially those unused to the limited acceleration capabilities of LSVs, and passengers will be exposed to a greater risk of injury or death when operating an LSV on roadways with a posted speed limit of 35 mph, or when attempting to cross a roadway with a posted speed limit greater than 35 mph.

Accordingly, the agency anticipates that the increase in the number of States that permit LSVs to operate in mixed vehicular traffic on roadways with a posted speed limit of 35–40 mph or less, and that permit LSVs to cross roadways with a posted speed limit greater than 35–40 mph, may result in more crashes involving LSVs and conventional vehicles.

As noted above, the agency does not have any data on the number of crashes involving LSVs and conventional vehicles. However, the agency notes that LSVs typically weigh from 1,100 to 1,400 pounds, while conventional light vehicles can weigh anywhere from 2,000 to 10,000 pounds. Thus, in a crash between an LSV and a conventional vehicle, the driver of the LSV would be exposed to a greater risk of injury or death.

## IV. Agency Proposal

### *A. Summary of the Proposal*

In the final rule establishing Standard No. 500, the agency noted that LSVs must be able to avoid crashes. The agency stated:

> In the mixed motoring environment that will result when LSVs are introduced, crash avoidance will become all the more important. The small LSV must be easily detectable by drivers of larger vehicles.

(63 FR 33208).

Thus, NHTSA determined that the key to minimizing crashes between LSVs and conventional vehicles was enhanced conspicuity of LSVs. The agency described several suggestions to enhance the conspicuity of LSVs made by commenters on the NPRM. One commenter suggested that the agency require LSVs to be equipped with a high-intensity flashing yellow lamp on the rear or top of the LSV. Another recommended that a retroreflective orange triangle be applied to the front and rear of LSVs. However, because the agency hoped that the States would permit the operation of LSVs only in controlled environments,[14] it limited the conspicuity requirements in Standard No. 500 to tail lamps and red reflex reflectors (one on each side and one on the rear of the vehicle).

The agency also believed that drivers of LSVs should be aware of the risks associated with operating an LSV in mixed traffic. The agency stated:

> With respect to the operator, the safety goal is that the driver be familiar with the operating characteristics of the LSV so that he or she may drive appropriately to minimize the possibility of rollover, or hitting a pedestrian or other vehicle.

(63 FR 33208). However, NHTSA did not require LSVs to be equipped with a warning label because the agency hoped that the States would limit the operation of LSVs to controlled environments.

Since the States are permitting more widespread operation of LSVs than NHTSA originally hoped, the agency now believes that a warning label and additional conspicuity requirements may be necessary. Accordingly, the agency is proposing to amend Standard No. 500 to require LSVs to be equipped with a warning label and the following additional conspicuity features: either additional reflex reflectors on the sides and rear of the vehicle, as required for passenger cars by Standard No. 108, ''Lamps, Reflective Devices, and Associated Equipment,'' or retroreflective conspicuity sheeting on the sides and rear of the vehicle, as required by S5.7.1.4.1(a) and S5.7.1.4.2 of Standard No. 108; a slow moving vehicle emblem; and headlamps, taillamps, and side marker lamps that are illuminated while the LSV is being operated.

### *B. Warning Label*

LSVs would have to be equipped with a warning label that reads as follows:

[14] In the final rule, NHTSA stated, ''The driving environment should be appropriate to the vehicle and its characteristics.'' 63 FR 33208 (June 17, 1998). The agency also urged States to adopt features limiting the use of LSVs to controlled environments or to separate, marked traffic lanes. *Id.*

The warning label would have to be permanently affixed in a location that is inside the vehicle and is clearly visible from the driver's seating position. The text area of the label would be no less than 175 $cm^2$ (27 $in^2$). The header and footer areas would be yellow with black text, and the message area would be white with black text. The font of the text in the header and footer areas would be not less than 6.25 mm (¼ inch) high, the font of the text in the center of the message area not less than 5 mm (3/16 inch) high, and the font of the text at the sides of the message area not less than 3 mm (⅛ inch) high.

The agency notes that the use of yellow with the word ''warning'' would disagree with American National Standards Institute (ANSI) standards. ANSI standards specify that when the word ''warning'' is used in the heading, the background color should be orange. However, in issuing a 1996 final rule requiring new warning labels for vehicles with air bags,[15] the agency conducted several focus groups to evaluate different warning labels. The agency stated:

Yellow was the overwhelming color preference of the participants in the focus groups. Only two of the 53 participants preferred orange. Participants generally stated that yellow was more eye-catching than orange. Participants also noted that red (stop) and yellow (caution) had meaning to them, but not orange.[16]

The agency also notes that several States require LSVs to be equipped with a notice conveying the operational restrictions of LSVs or the potential risks of driving LSVs to the driver. For example, Arizona and Hawaii require LSVs to have a notice of the operational restrictions applying to the vehicle permanently attached to or painted on the vehicle in a location that is in clear view of the driver.

NHTSA realizes that in these States, the warning label proposed in this document might partially duplicate the State-required notices. However, the agency believes that the proposed warning label would complement the State-required notices to inform LSV drivers both of the operational limitations of LSVs and the risks associated with driving LSVs in mixed traffic. To facilitate compliance with both the Federal and State warning label requirements, NHTSA is proposing to allow the proposed warning label to be combined with similar State-required labels. The agency requests comments from State agencies on these issues.

*C. Reflex Reflectors or Retroreflective Sheeting*

LSVs would have to be equipped with either reflex reflectors or retroreflective sheeting. If the LSV is equipped with reflex reflectors, the reflex reflectors would have to comply with Table III and Table IV of Standard No. 108 for passenger cars, multipurpose passenger vehicles, trucks, and buses. This would require LSVs to be equipped with four red and two amber reflex reflectors. The reflex reflectors would have to be mounted at a height above the road surface of not less than 15 inches, nor more than 60 inches, and be located as follows: two red reflectors on the rear of the LSV, one on each side of the vertical centerline, at the same height, and as far apart as practicable; one red reflector on each side of the LSV, as far to the rear as practicable; and one amber on each side of the LSV, as far to the front as practicable.

If the LSV is equipped with retroreflective sheeting, the retroreflective sheeting would have to comply with the requirements of

[15] 61 FR 60206 (November 27, 1996), Docket No. 74–14, Notice 103.

[16] 61 FR 60211 (November 27, 1996).

S5.7.1.1 through S5.7.1.3 of Standard No. 108. This would require the retroreflective sheeting to consist of a smooth, flat, transparent exterior film with retroreflective elements embedded or suspended beneath the film so as to form a non-exposed retroreflective optical system. This also would require the retroreflective sheeting to have a width of at least 50 mm and be applied in a pattern of alternating white and red color segments.

The retroreflective sheeting would have to be applied to the sides of LSVs as specified in S5.7.1.4.2 of Standard No. 108 for the side of trailers. This would require a strip of retroreflective sheeting, as horizontal as practicable, to be applied to each side of the LSV. The strip would have to originate and terminate as close as possible to the front and rear of the LSV as practicable. The strip would not have to be continuous as long as not less than half the length of the LSV was covered, and the spaces were distributed as evenly as possible.

The retroreflective sheeting also would have to be applied to the rear of LSVs as specified in S5.7.1.4.1(a) of Standard No. 108 for the rear of trailers. This would require a strip of retroreflective sheeting, as horizontal as practicable, to be applied across the full width of the rear of the LSV. The strip would have to originate and terminate as close to the extreme edges of the LSV as practicable. The strip would have to be located as close as practicable to not less than 375 mm and not more than 1565 mm above the road surface.

Following are drawings of an LSV with reflex reflectors and of an LSV with retroreflective sheeting.

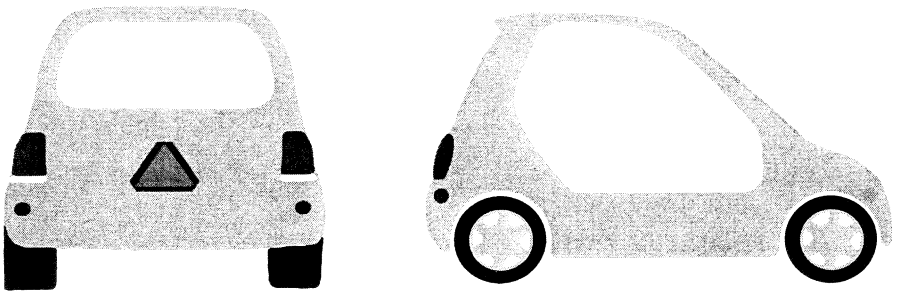

**A. LSV with Reflex Reflectors**

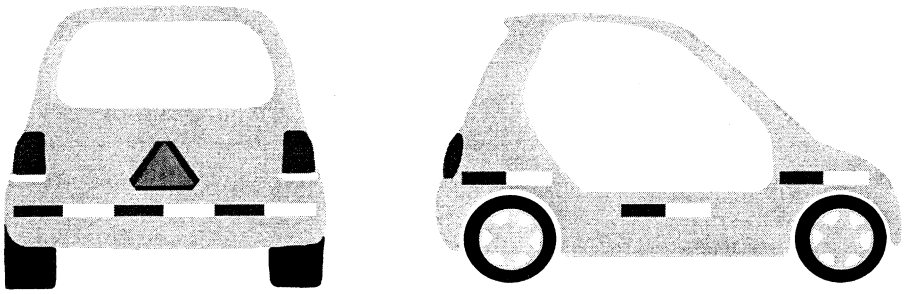

**B. LSV with Retroreflective Sheeting**

NHTSA believes that the proposed requirements, if adopted, would significantly enhance the visibility of LSVs, from both the side and rear views, at night.[17]

The agency notes that consumers may have an adverse reaction to retroreflective sheeting on the side of LSVs. However, the strip of retroreflective sheeting would have to cover only the rear of the vehicle and half the length of the vehicle. In addition, the agency is proposing to allow LSV manufacturers to use reflex reflectors instead of retroreflective sheeting. These reflectors might be more aesthetically pleasing than sheeting to drivers. Comments are invited on this issue.

[17] The agency is proposing to adopt both requirements, but manufacturers would only have to comply with one or the other.

*D. Slow Moving Vehicle Emblem*

LSVs also would have to be equipped with a slow moving vehicle emblem on the rear of the LSV. The slow moving vehicle emblem would have to comply with the emblem maintained by the American Society of Agricultural Engineers (ANSI/ASAE S276.5 MAY98, Slow-Moving Vehicle Identification Emblem), and would have to be mounted in accordance with ASAE requirements.

Following is a picture of the slow moving vehicle emblem with its dimensions.

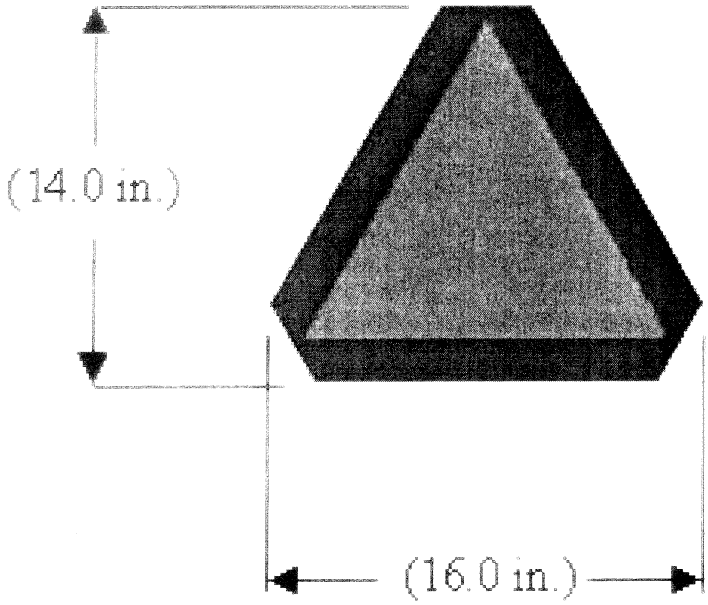


**A. LSV Emblem with Dimensions**

The ASAE slow moving vehicle emblem is a fluorescent orange, equilateral triangle with a red retroreflective border. The ASAE standard specifies that the emblem is mounted with the point of the triangle upward in a plane perpendicular to the direction of travel and ± 20 degrees from the vertical. The emblem is displayed as near to the rear and centered, or as near to the left of center of the vehicle or equipment, as practical. It is located 0.6 to 3 meters (2 to 10 feet) above the ground measured from the lower edge of the emblem. The emblem is ''securely and rigidly affixed to the equipment.''

NHTSA notes that several States, including Colorado, Hawaii, Illinois, Minnesota, New Mexico, Texas, and Virginia, currently require LSVs to be equipped with a slow moving vehicle emblem. However, most of these States require the emblem to conform to the ASAE standard as to specifications and mounting. The slow moving vehicle emblem proposed in this document would be consistent with those States' requirements.

Some States require that the emblem conform to different specifications. For example, Hawaii requires the emblem to be mounted at a height of 3 to 5 feet above the ground, and New Mexico requires the emblem to be mounted at a height of 2 to 5 feet above the ground. NHTSA notes that the ASAE height specification (2 to 10 feet above the ground) the agency is proposing to require would mesh with these State requirements. However, the agency invites comment on this issue.

*E. Side Marker Lamps*

LSVs also would have to be equipped with side marker lamps as specified in Table III and Table IV of Standard No. 108 for passenger cars, multipurpose passenger vehicles, trucks, and buses. This would require LSVs to be equipped with 2 red and 2 amber side marker lamps. The side marker lamps would have to be mounted at a height above the road surface of not less than 15 inches, and be located as follows: one red on each side of the LSV, as far to the rear as practicable; and one amber on each side of the LSV, as far to the front as practicable.

The agency believes that the addition of side marker lamps would significantly enhance the visibility of LSVs, from the side view, at night.

*F. Headlamps, Taillamps, and Side Marker Lamps Illuminated While LSV Is Being Operated*

An LSV's headlamps, taillamps, and side marker lamps also would have to be illuminated at all times while the LSV is being operated. Thus, when an LSV's ignition is activated, or the switch or device that provides power from the propulsion batteries to the propulsion motor(s) is in the activated or the ready-to-drive position, its headlamps, taillamps, and side marker lamps would have to illuminate automatically and remain illuminated.

The agency believes that requiring LSV headlamps, taillamps, and side marker lamps to be illuminated while the LSV is being operated would significantly enhance the conspicuity of LSVs from the front and rear during the daytime and twilight hours. While the agency has no data on the effectiveness of requiring headlamps, taillamps, and side marker lamps to be illuminated during vehicle operation, a June 2000 NHTSA report on the effectiveness of daytime running lamps (DRLs) indicated that passenger cars with DRLs were involved in 7 percent fewer non-fatal, two-vehicle crashes, and 28 percent fewer pedestrian fatalities.[18]

The agency also notes that many LSVs operate on battery power, and that the

[18] ''A Preliminary Assessment of the Crash-Reduciing Effectiveness of Passenger Car Daytime Runninig Lamps (DRLs),'' NHTSA, June 2000, DOT HS 808 645. A copy of this report has been placed in the docket.

maximum range of current battery-powered LSVs is limited to about 30 miles on a full battery charge. Requiring LSVs to have their headlamps, taillamps, and side marker lamps illuminated at all times while the LSV is being operated would have some impact on the battery power. However, the agency is uncertain of the extent of that impact. The agency also notes that reducing the maximum range of battery-powered LSVs could be considered a safety issue if an LSV runs out of power while being operated on a public roadway.

NHTSA requests comment on the impact of this proposed requirement on the conspicuity of LSVs, the maximum range of battery-powered LSVs, and the safety consequences of reduced battery power.

*G. Notifying State Agencies and Monitoring LSV Usage*

Finally, GM requested that the agency: (1) notify State agencies of the potential risks associated with the increased operation of LSVs on public roads and encourage those State agencies to consider appropriate measures to reduce the potential for harm; and (2) monitor any increased usage of LSVs on public roads for the incidence of collisions and resulting injuries to determine if stronger measures should be incorporated in Standard No. 500.

NHTSA believes these recommendations have merit. With so many States permitting LSVs to be operated on public roads, we agree that it would be worthwhile for the agency to emphasize its concerns to those State agencies about the risks associated with the operation of LSVs on public roads. As to monitoring LSV usage on public roads and fatalities and injuries as a result of crashes involving LSVs, we will consult with the state agencies on this matter.

As such, the agency believes that States should consider monitoring LSV usage on public roads and fatalities and injuries that result from crashes involving LSVs. The agency invites comment on how that monitoring should be done, both on a State and a national level, consistently and effectively. The agency also invites comment on the best way to consult with the States on this issue.

*H. Questions on This Proposal*

The agency requests answers to the following questions on the additional conspicuity requirements and warning label proposed in this document. Specifically:

1. Would these conspicuity features be appropriate and effective during the day? At night?
2. Should the agency require conspicuity features in addition to those being proposed?
3. What would the cost be of the proposed features? Of any additional features?
4. How can the agency increase conspicuity while maintaining consumer acceptance?
5. Should additional language or issues (*e.g.*, state of battery charge, rollover propensity, etc.) be included in the warning label?
6. Where should the label be located on the LSV? Should the agency specify that the label must be visible to a normally seated driver using the occupant restraints? Should it specify that the location of the label in relation to the H-point of the driver's seat, as the agency has done with respect to the location of the telltale for the air bag on-off switch?
7. What color(s) should the label be?
8. What size should the label be? What size should the font be?
9. Should the label be required to be permanent?
10. What would the cost be of adding this warning label?
11. What steps can the agency take to mesh its proposed warning label and slow moving vehicle emblem with existing State requirements for warning labels and slow moving vehicle emblems?
12. What steps should the agency and States take to address the risks associated with the operation of LSVs in mixed traffic and to monitor crashes involving LSVs?
13. How would the proposed requirement that LSVs have their headlamps, taillamps, and side marker lamps illuminated at all times while the LSV is being operated impact LSVs that operate on battery power?

Please be as specific as possible in your answers to these questions and provide supporting data.

*I. Lead Time*

NHTSA is proposing to require these additional features, except for the side marker lamps, for LSVs manufactured on or after September 1, 2002 for the following reasons.

The ZEV mandate discussed above will take effect in California September 1, 2002. Thus, the agency anticipates that a high volume of LSVs could be sold and operating on the public roads later this year. The agency believes the safety of the drivers of these LSVs would be enhanced by requiring these LSVs to be equipped with the conspicuity features proposed in this document.

The agency also believes that LSV manufacturers and/or dealers would need little time to procure and install most of the items the agency is proposing to require because they are readily available and easily installed.[19] Retroreflective sheeting may be installed with adhesive backings. Reflex reflectors also may be installed with adhesive backings or with self-drilling-tapping screws or by pop-rivets. The slow-moving vehicle emblem is almost always installed on a completed vehicle using brackets provided by the vehicle manufacturer or by the emblem manufacturer.

The agency notes that while the warning label is not readily available, it should not be difficult for LSV manufacturers and dealers to procure such a label when the content of the warning is already known. Warning labels also are easily installed. They typically have an adhesive backing and can be added as the LSV is assembled or some time after.

NHTSA also notes that the lights-on requirement would necessitate an additional relay that can be added after the LSV is assembled, by either the manufacturer or dealer. Instructions from the LSV manufacturer would simplify this process, especially if the manufacturer were to make available to LSV dealers a kit that would suffice until all LSVs were manufacturer with a standard lights-on feature.

The agency is proposing to require side marker lamps be installed on LSVs manufactured on or after September 1, 2003. The agency is proposing an additional year of lead time for this feature because the installation of side marker lamps requires a wiring harness change and possibly a higher current capable lighting switch/relay. Thus, the agency believes an extra year of lead time is appropriate for this feature.

**V. Costs**

NHTSA estimates that the cost of equipping an LSV with the proposed warning label would be from $0.08 to $0.13 per vehicle.[20] The agency notes that a small number of manufacturers already equip some LSVs with a label warning of the vehicle's operational restrictions. These labels may need to be redesigned, which would cost less than providing a new label. However, given the small number of LSVs that are currently equipped with such a label,

[19] The agency notes that some vehicles may be at dealerships, but believes that these additional items would easily be installable by dealers because they are simple add-on devices.

[20] All cost estimates are in 2001 dollars.

the agency believes that this difference in cost will not affect the $0.08 to $0.13 per vehicle estimate.

NHTSA estimates that the cost of equipping an LSV with the proposed slow moving vehicle emblem, including installation and overhead costs, would be $7.00 per vehicle.

NHTSA is proposing to require LSV manufacturers to equip LSVs with either three additional reflex reflectors (an additional one on each side and the rear of the vehicle) or retroreflective sheeting on the sides and rear of the vehicle. The retail cost of reflex reflectors is about $1.00. Thus, if LSV manufacturers choose to comply by equipping LSVs with additional reflex reflectors, the agency estimates that the cost, including installation and overhead costs, would be $3.00 per vehicle.

The average current price of 50 mm-wide retroreflective sheeting is $2.54 per meter. The average LSV is about 3 meters long and 1.42 meters wide. However, the agency is proposing to require that the retroreflective sheeting cover only half of the length of the sides of LSVs. Thus, the average LSV would require 4.42 meters of 50 mm-wide retroreflective sheeting, at a cost of $11.23. The agency estimates that the labor cost would be $3.30 per vehicle.

The agency notes that in a 1992 NHTSA rulemaking to require that trailers with a gross vehicle weight rating of more than 10,000 pounds be equipped with either retroreflective sheeting or reflectors,[21] trailer manufacturers commented that their cost estimate was 54 percent higher than NHTSA's cost estimate. To account for the possibility that trailer manufacturers might experience costs higher than the agency's estimate, NHTSA increased its cost estimate by half the difference between the agency's estimate and the trailer manufacturer's estimate, or 27 percent. To be consistent, the agency is increasing its cost estimate for the current rulemaking by 27 percent as well. Thus, if LSV manufacturers choose to comply by equipping LSVs with retroreflective sheeting, the agency estimates that the cost would be $18.46 per vehicle [($11.23 + $3.30) * 1.27].

The agency estimates that the cost of equipping an LSV with side marker lamps would be $28.30 per vehicle.

The agency has been unable to estimate the cost of requiring LSVs to have their headlamps, taillamps, and side marker lamps illuminated while the LSV is being operated. The agency notes that many LSVs operate on batteries, and requiring LSVs to have their headlamps, taillamps, and side marker lamps illuminated at all times while the LSV is being operated would have some impact on the battery power. However, the agency has not been able to quantify that impact or the cost of that impact. The agency invites comment on this issue.

Based on the cost estimates above, the total cost of this proposal would be from $38.38 to $53.89 per vehicle, depending on whether LSV manufacturers choose to comply with reflex reflectors or retroreflective sheeting.

## VI. Benefits

NHTSA has not attempted to quantify the safety benefits of these proposals. The agency invites comment on this issue.

## VII. Rulemaking Analyses and Notices:

### *A. Executive Order 12866 and DOT Regulatory Policies and Procedures*

Executive Order 12866, ''Regulatory Planning and Review'' (58 FR 51735, October 4, 1993), provides for making determinations whether a regulatory action is ''significant'' and therefore subject to Office of Management and Budget (OMB) review and to the requirements of the Executive Order. The Order defines a ''significant regulatory action'' as one that is likely to result in a rule that may:

(1) Have an annual effect on the economy of $100 million or more or adversely affect in a material way the economy, a sector of the economy, productivity, competition, jobs, the environment, public health or safety, or State, local, or Tribal governments or communities;

(2) Create a serious inconsistency or otherwise interfere with an action taken or planned by another agency;

(3) Materially alter the budgetary impact of entitlements, grants, user fees, or loan programs or the rights and obligations of recipients thereof; or

(4) Raise novel legal or policy issues arising out of legal mandates, the President's priorities, or the principles set forth in the Executive Order.

This rulemaking document was not reviewed under Executive Order 12866. It is not significant within the meaning of the DOT's Regulatory Policies and Procedures. This regulatory action would require additional conspicuity features and a warning label on LSVs. If this proposal is adopted, the agency estimates that the cost of these additions would be from $38.38 to $53.89 per vehicle, depending on whether LSV manufacturers choose to comply with reflex reflectors or retroreflective sheeting. The agency does not know how many LSVs are manufactured each year. However, according to its petition, GM believes that the volume of LSVs could grow to 50,000 units per year by the end of 2002. Using the 50,000 figure, the total cost of this rulemaking would be from $1.9 million to $2.7 million.

### *B. Regulatory Flexibility Act*

Pursuant to the Regulatory Flexibility Act (5 U.S.C. 601 *et seq.*, as amended by the Small Business Regulatory Enforcement Fairness Act (SBREFA) of 1996), whenever an agency is required to publish a notice of rulemaking for any proposed or final rule, it must prepare and make available for public comment a regulatory flexibility analysis that describes the effect of the rule on small entities (*i.e.,* small businesses, small organizations, and small governmental jurisdictions). The Small Business Administration's (SBA) regulations at 13 CFR part 121 define a small business, in part, as a business entity ''which operates primarily within the United States.'' (13 CFR 121.105(a)). No regulatory flexibility analysis is required if the head of an agency certifies the rule will not have a significant economic impact on a substantial number of small entities. SBREFA amended the Regulatory Flexibility Act to require Federal agencies to provide a statement of the factual basis for certifying that a rule will not have a significant economic impact on a substantial number of small entities.

NHTSA has considered the effect of this proposed rule under the Regulatory Flexibility Act. As noted above, this proposed rule would require additional conspicuity features and a warning label on LSVs. The agency does not believe that there are a significant number of small businesses that manufacture LSVs in the U.S. market. The agency knows of six LSV manufacturers. Three of them are aligned with large companies, and one is a foreign manufacturer, leaving only 2 small LSV manufacturers in the U.S.

Based on this analysis, I certify that this proposed rule would not have a significant economic impact on a substantial number of small entities.

### *C. National Environmental Policy Act*

NHTSA has analyzed this rulemaking action for the purposes of the National Environmental Policy Act. The agency has determined that implementation of this proposed rule would not have any significant impact on the quality of the human environment.

[21] NHTSA issued the final rule on December 10, 1992 (57 FR 58406, Docket No. 80–9, Notice 6).

*D. Executive Order 13132 (Federalism)*

Executive Order 13132 requires NHTSA to develop an accountable process to ensure ''meaningful and timely input by State and local officials in the development of regulatory policies that have federalism implications.'' ''Policies that have federalism implications'' is defined in the Executive Order to include regulations that have ''substantial direct effects on the States, on the relationship between the national government and the States, or on the distribution of power and responsibilities among the various levels of government.'' Under Executive Order 13132, the agency may not issue a regulation with Federalism implications, that imposes substantial direct compliance costs, and that is not required by statute, unless the Federal government provides funds necessary to pay the direct compliance costs incurred by State and local governments, the agency consults with State and local governments, or the agency consults with State and local officials early in the process of developing the proposed regulation. NHTSA also may not issue a regulation with Federalism implications and that preempts State law unless the agency consults with State and local officials early in the process of developing the proposed regulation.

The agency has analyzed this proposed rule in accordance with the principles and criteria set forth in Executive Order 13132 and has determined that it would have sufficient federalism implications to warrant consultation with State and local officials or the preparation of a federalism summary impact statement. If adopted, the proposal would preempt State laws requiring slow moving vehicle emblems, other than the emblem specified by the ASAE, to be mounted on LSVs in accordance with requirements different from those specified by the ASAE. The proposal would also impact state requirements for warning labels on LSVs. Accordingly, the agency contacted the AAMVA, and officials from Connecticut, Florida, Hawaii, Missouri, New Jersey, New York, Ohio, Oregon, Texas, and Virginia prior to issuing this proposed rule.

*E. Civil Justice Reform*

This proposed amendment would not have any retroactive effect. Under 49 U.S.C. 33118, whenever a Federal motor vehicle theft prevention standard is in effect, a State or political subdivision of a State may not adopt or maintain a different theft prevention standard for a motor vehicle or replacement part. 49 U.S.C. 32909 sets forth a procedure for judicial review of final rules establishing, amending, or revoking Federal motor vehicle theft prevention standards. That section does not require submission of a petition for reconsideration or other administrative proceedings before parties may file suit in court.

*F. Paperwork Reduction Act*

Under the Paperwork Reduction Act of 1995, a person is not required to respond to a collection of information by a Federal agency unless the collection displays a valid OMB control number. This proposed rule does not have any requirements that would be considered information collection requirements as defined by OMB in 5 CFR part 1320.

*G. National Technology Transfer and Advancement Act*

Section 12(d) of the National Technology Transfer and Advancement Act of 1995 (15 U.S.C. 272) directs NHTSA to use voluntary consensus standards in regulatory activities unless doing so would be inconsistent with applicable law or otherwise impractical. Voluntary consensus standards are technical standards (*e.g.,* materials specifications, test methods, sampling procedures, and business practices) that are developed or adopted by voluntary consensus standards bodies, such as the Society of Automotive Engineers (SAE). The NTTAA directs NHTSA to provide Congress, through OMB, explanations when the agency decides not to use available and applicable voluntary consensus standards.

The agency is proposing to use the following standard from the American Society of Agricultural Engineers: ANSI/ASAE S276.5 MAY98, Slow-Moving Vehicle Identification Emblem.

The agency also notes that, in March 2002, the Society of Automotive Engineers (SAE) adopted a standard on LSVs.[22] The SAE standard specifies that reflex reflectors are to be mounted at a height above the road surface of not less than 15 inches nor more than 60 inches, and be located as follows: Two yellow, mounted (one on each side) as far forward as practicable; two red, mounted (one on each side) as far rearward as practicable; and two red, mounted on the rear, as far from the vehicle centerline as practicable.

NHTSA is proposing to require that the reflex reflectors be mounted at a height above the road surface of not less than 15 inches and not more than 60 inches, and be located as follows: Two amber, mounted (one on each side) as far forward as practicable; two red, mounted (one on each side) as far rearward as practicable; and two red mounted on the rear, one on each side of the vertical centerline, at the same height, and as far apart as practicable.

Thus, NHTSA's proposal differs from the SAE standard in one minor way: The SAE standard specifies a different color (yellow) than the agency's proposal (amber) for the two reflectors mounted on the side of the LSV as far forward as practicable. NHTSA is not proposing to adopt yellow as the color for these reflectors for the following reasons. First, the agency wants these LSV requirements to be consistent with the requirements for other light vehicles. Standard No. 108 requires reflex reflectors for other light vehicles to be amber (or red), not yellow. Second, Standard No. 108 refers to SAE standard J594f (January 1977) for the color of reflex reflectors. That SAE standard refers to SAE standard J578, ''Color Specifications for Electric Signal Lighting Devices,'' which uses ''amber'' and ''yellow'' interchangeably. Finally, the SAE standard for LSVs does not define ''yellow.''

The SAE standard also contains optional specifications for side marker lamps. If side marker lamps are provided, the SAE standard specifies that they are to be mounted at a height above the road surface of not less than 15 inches and not more than 60 inches, and be located as follows: One yellow on each side of the LSV, as far forward as practicable; and one red on each side of the LSV, as far rearward as practicable.

NHTSA is proposing to require that side marker lamps be mounted at a height above the road surface of not less than 15 inches, and be located as follows: One amber on each side of the LSV, as far forward as practicable; and one red on each side of the LSV, as far rearward as practicable.

Thus, the agency's proposal differs from the SAE standard in two minor ways: The SAE standard contains a maximum height specification (60 inches above the road surface), and the agency's proposal does not; and the SAE standard specifies a different color (yellow) for the side marker lamps located as far forward as practicable than the agency's proposal (amber). NHTSA is not proposing a maximum height specification for side marker lamps because it is unnecessary. Reflex reflectors are required to be mounted between 15 and 60 inches above the road surface because they reflect light

[22] ''Low Speed Vehicles,'' Document No. J2358, March 2002.

from other vehicles' headlamps. If they were more than 60 inches above the road, they would not reflect light effectively, and thus would not be easily seen. However, side marker lamps emit light. Thus, they do not have to be below a certain height in order to be seen. NHTSA is not proposing to adopt yellow as the color for these side marker lamps for the same reasons the agency is not proposing to adopt yellow as the color for reflex reflectors.

Finally, the SAE standard specifies that LSVs be equipped with several safety warnings/signs. The SAE standard specifies that safety signs be permanently affixed to the vehicle, be visible to the operator, and convey the following information:

To avoid the risk of severe personal injury or death:

a. Only operate at maximum speed when on smooth, flat, non-congested roadways or paved pathways.

b. Do not operate the vehicle until all occupants are seated and seat belts are fastened (if so equipped).

c. Drive slowly in turns and when descending grades.

d. Set parking brake before leaving vehicle.

e. Place vehicle control in ''Neutral/Park'', if so equipped, and remove the ignition key when not in use.

f. Do not operate under the influence of alcohol or other drugs.

NHTSA is proposing to require that the warning label be permanently affixed in a location that is inside the vehicle and is clearly visible from the driver's seating position. The warning label would have to convey the following information:

a. An LSV has less safety equipment than conventional motor vehicles;.

b. The operator and passengers have a higher risk of crash, serious injury, or death when the LSV is operated on roads with conventional motor vehicles or on roads where the posted speed limit exceeds 25 mph;

c. LSV operators and passengers should always wear safety belts.

The agency believes that the warning label proposed in this document addresses the safety problem discussed in this document, *i.e.,* the operation of LSVs on roads with conventional motor vehicles and on roads where the posted speed limit exceeds the top speed of LSVs. In addition, NHTSA is proposing specifications for the size of the font, the background colors, and the size of the label itself. The SAE standard does not contain such specifications. The agency believes such specifications are necessary to ensure that the warning is uniform, eye-catching, and is easy to read and understand. Accordingly, the agency is not proposing the safety warning specified in the SAE standard. However, the agency solicits comments on this and all other aspects of the SAE standard. The agency will consider those comments in making decisions about a final rule.

The agency will consider any other relevant voluntary standards should they become available.

*H. Unfunded Mandates Reform Act*

Section 202 of the Unfunded Mandates Reform Act of 1995 (UMRA) requires Federal agencies to prepare a written assessment of the costs, benefits, and other effects of proposed or final rules that include a Federal mandate likely to result in the expenditure by State, local, or tribal governments, in the aggregate, or by the private sector, of more than $100 million in any one year (adjusted for inflation with base year of 1995). Before promulgating a rule for which a written statement is needed, section 205 of the UMRA generally requires NHTSA to identify and consider a reasonable number of regulatory alternatives and adopt the least costly, most cost-effective, or least burdensome alternative that achieves the objective of the rule. The provisions of section 205 do not apply when they are inconsistent with applicable law. Moreover, section 205 allows NHTSA to adopt an alternative other than the least costly, most cost-effective, or least burdensome alternative if the agency publishes with the final rule an explanation why that alternative was not adopted.

If adopted, this proposed rule would not result in the expenditure by State, local, or tribal governments, in the aggregate, or by the private sector, of more than $100 million annually.

*I. Plain Language*

Executive Order 12866 requires each agency to write all rules in plain language. Application of the principles of plain language includes consideration of the following questions:

—Has the agency organized the material to suit the public's needs?

—Are the requirements in the rule clearly stated?

—Does the rule contain technical language or jargon that is not clear?

—Would a different format (grouping and order of sections, use of headings, paragraphing) make the rule easier to understand?

—Would more (but shorter) sections be better?

—Could the agency improve clarity by adding tables, lists, or diagrams?

—What else could the agency do to make this rulemaking easier to understand?

If you have any responses to these questions, please include them in your comments on this NPRM.

*J. Regulation Identifier Number (RIN)*

The Department of Transportation assigns a regulation identifier number (RIN) to each regulatory action listed in the Unified Agenda of Federal Regulations. The Regulatory Information Service Center publishes the Unified Agenda in April and October of each year. You may use the RIN contained in the heading at the beginning of this document to find this action in the Unified Agenda.

**Comments**

*How Do I Prepare and Submit Comments?*

Your comments must be written and in English. To ensure that your comments are correctly filed in the Docket, please include the docket number of this document in your comments.

Your comments must not be more than 15 pages long. (49 CFR 553.21). NHTSA established this limit to encourage you to write your primary comments in a concise fashion. However, you may attach necessary additional documents to your comments. There is no limit on the length of the attachments.

Please submit two copies of your comments, including the attachments, to Docket Management at the address given above under **ADDRESSES.**

You may also submit your comments to the docket electronically by logging onto the Dockets Management System Web site at *http://dms.dot.gov.* Click on ''Help & Information'' or ''Help/Info'' to obtain instructions for filing the document electronically.

*How Can I Be Sure That My Comments Were Received?*

If you wish Docket Management to notify you upon its receipt of your comments, enclose a self-addressed, stamped postcard in the envelope containing your comments. Upon receiving your comments, Docket Management will return the postcard by mail.

*How Do I Submit Confidential Business Information?*

If you wish to submit any information under a claim of confidentiality, you should submit three copies of your complete submission, including the information you claim to be confidential

business information, to the Chief Counsel, NHTSA, at the address given above under **FOR FURTHER INFORMATION CONTACT.** In addition, you should submit two copies, from which you have deleted the claimed confidential business information, to Docket Management at the address given above under **ADDRESSES.** When you send a comment containing information claimed to be confidential business information, you should include a cover letter setting forth the information specified in our confidential business information regulation. (49 CFR part 512.)

*Will the Agency Consider Late Comments?*

NHTSA will consider all comments that Docket Management receives before the close of business on the comment closing date indicated above under **DATES.** To the extent possible, the agency will also consider comments that Docket Management receives after that date. If Docket Management receives a comment too late for the agency to consider it in developing a final rule (assuming that one is issued), the agency will consider that comment as an informal suggestion for future rulemaking action.

*How Can I Read the Comments Submitted by Other People?*

You may read the comments received by Docket Management at the address given above under **ADDRESSES.** The hours of the Docket are indicated above in the same location.

You may also see the comments on the Internet. To read the comments on the Internet, take the following steps:

1. Go to the Docket Management System (DMS) Web page of the Department of Transportation (*http://dms.dot.gov/*).
2. On that page, click on ''search.''
3. On the next page (*http://dms.dot.gov/search/*), type in the four-digit docket number shown at the beginning of this document. Example: If the docket number were ''NHTSA–1998–1234,'' you would type ''1234.'' After typing the docket number, click on ''search.''
4. On the next page, which contains docket summary information for the docket you selected, click on the desired comments. You may download the comments. Although the comments are imaged documents, instead of word processing documents, the ''pdf'' versions of the documents are word searchable.

Please note that even after the comment closing date, NHTSA will continue to file relevant information in the Docket as it becomes available. Further, some people may submit late comments. Accordingly, the agency recommends that you periodically check the Docket for new material.

**List of Subjects in 49 CFR Part 571**

Imports, Motor vehicle safety, Motor vehicles, Rubber products, Tires.

In consideration of the foregoing, NHTSA is proposing to amend part 571 as follows:

## PART 571—FEDERAL MOTOR VEHICLE SAFETY STANDARDS

1. The authority citation for part 571 would continue to read as follows:

**Authority:** 39 U.S.C. 322, 30111, 30115, 30117, 30166; delegation of authority at 49 CFR 1.50.

2. Section 571.500 would be amended by revising paragraph S5(b) introductory text, (b)(1), (b)(3), and (b)(5), and adding paragraphs S5(b)(11), (b)(12), and (b)(13) to read as follows:

### § 571.500 Standard No. 500; Low-speed vehicles.

* * * * *

S5. Requirements.

* * * * *

(b) Each low-speed vehicle must be equipped with:

(1) Headlamps that are illuminated when the ignition is activated, or the switch or device that provides power from the propulsion batteries to the propulsion motor(s) is in the activated or the ready-to-drive position,

* * * * *

(3) Taillamps that are illuminated when the ignition is activated, or the switch or device that provides power from the propulsion batteries to the propulsion motor(s) is in the activated or the ready-to-drive position,

* * * * *

(5)(i) Reflex reflectors as specified in Table III of Standard No. 108 (49 CFR 571.108) for passenger cars, multipurpose passenger vehicles, trucks, and buses, and mounted as specified in Table IV of Standard No. 108 (49 CFR 571.108), or

(ii) Retroreflective sheeting as specified in S5.7.1.1 through S5.7.1.3 of Standard No. 108 (49 CFR 571.108), located as specified in S5.7.1.4.1(a) of Standard No. 108 for the rear of trailers, and S5.7.1.4.2 of Standard No. 108 for the side of trailers,

* * * * *

(11) An emblem that complies with ANSI/ASAE S276.5 MAY98, Slow-Moving Vehicle Identification Emblem (American Society of Agricultural Engineers, 2950 Niles Rd., St. Joseph, MI 49085–9659, USA ph. 616–429–0300, fax 616–429–3852, *hq@asae.org*.) This emblem must be mounted in accordance with the requirements therein.

(12) For LSVs manufactured on or after September 1, 2003, side marker lamps as specified in Table III of Standard No. 108 (49 CFR 571.108) for passenger cars, multipurpose passenger vehicles, trucks, and buses, that are:

(i) Mounted as specified in Table IV of Standard No. 108 (49 CFR 571.108), and

(ii) Illuminated when the ignition is activated, or the switch or device that provides power from the propulsion batteries to the propulsion motor(s) is in the activated or the ready-to-drive position, and

(13) A warning label that meets the following requirements—

(i) The label must be permanently affixed to a location that is inside the vehicle and is clearly visible from the driver's seating position.

(ii) The text area of the label must be not less than 175 $cm^2$ (27 $in^2$).

(iii) The header and footer areas must be yellow with black text, and the message area must be white with black text.

(iv) The font of the text in the header and footer areas must be not less than 6.25 mm (¼ inch) high; the font of the text in the center of the message area must be not less than 5 mm (3⁄16 inch) high; and the font of the text at the sides of the message area must be not less than 3 mm (⅛ inch) high.

(v) The label may be combined with a similar State-required warning label. On combined labels, the text specified in this section must be separated from the State-required text by a line.

(vi) The warning label must read as shown in Figure 1:

Figure 1

* * * * *

Issued: July 5, 2002.

**Stephen R. Kratzke,**

*Associate Administrator for Safety Performance Standards.*

[FR Doc. 02–17422 Filed 7–11–02; 8:45 am]

BILLING CODE 4910–59–P