Federal Register

Tuesday,
September 3, 2002

# Part II

# Architectural and Transportation Barriers Compliance Board

**36 CFR Parts 1190 and 1191**

**Americans With Disabilities Act (ADA) Accessibility Guidelines for Buildings and Facilities; Final Rule**

**Americans With Disabilities Act (ADA) Accessibility Guidelines for Buildings and Facilities; Architectural Barriers Act (ABA) Accessibility Guidelines; Recreation Facilities; Supplemental Notice of Proposed Rulemaking**

**ARCHITECTURAL AND TRANSPORTATION BARRIERS COMPLIANCE BOARD**

**36 CFR Part 1191**

**[Docket No. 98–5]**

**RIN 3014–AA16**

## Americans With Disabilities Act (ADA) Accessibility Guidelines for Buildings and Facilities; Recreation Facilities

**AGENCY:** Architectural and Transportation Barriers Compliance Board.

**ACTION:** Final rule.

**SUMMARY:** The Architectural and Transportation Barriers Compliance Board (Access Board) is issuing final accessibility guidelines to serve as the basis for standards to be adopted by the Department of Justice for new construction and alterations of recreation facilities covered by the Americans with Disabilities Act (ADA). The guidelines include scoping and technical provisions for amusement rides, boating facilities, fishing piers and platforms, golf courses, miniature golf, sports facilities, and swimming pools and spas. The guidelines will ensure that newly constructed and altered recreation facilities meet the requirements of the ADA and are readily accessible to and usable by individuals with disabilities.

**DATES:** The guidelines are effective October 3, 2002. The incorporation by reference of certain publications listed in the guidelines is approved by the Director of the Federal Register as of October 3, 2002.

**FOR FURTHER INFORMATION CONTACT:** Peggy Greenwell, Office of Technical and Information Services, Architectural and Transportation Barriers Compliance Board, 1331 F Street, NW., suite 1000, Washington, DC 20004–1111. Telephone number (202) 272–0017 (Voice); (202) 272–0082 (TTY). E-mail address: *greenwell@access-board.gov.*

**SUPPLEMENTARY INFORMATION:**

### Availability of Copies and Electronic Access

Single copies of this publication may be obtained at no cost by calling the Access Board's automated publications order line (202) 272–0080, by pressing 2 on the telephone keypad, then 1, and requesting publication S–43 (Recreation Facilities Final Rule). Persons using a TTY should call (202) 272–0082. Please record a name, address, telephone number and request publication S–43. This document is available in alternate formats upon request. Persons who want a copy in an alternate format should specify the type of format (cassette tape, Braille, large print, or ASCII disk). This document is also available on the Board's Internet site *(http://www.access-board.gov/recreation/final.htm).*

### Background

The Americans with Disabilities Act recognizes and protects the civil rights of people with disabilities.[1] Titles II and III of the ADA require, among other things, that newly constructed and altered State and local government facilities, places of public accommodation, and commercial facilities be readily accessible to and usable by individuals with disabilities. Recreation facilities are among the types of facilities covered by titles II and III of the ADA.

The ADA designates the Access Board as the agency responsible for developing minimum accessibility guidelines to ensure that new construction and alterations of facilities covered by titles II and III of the ADA are readily accessible to and usable by individuals with disabilities.[2] The Access Board initially issued the Americans with Disabilities Act Accessibility Guidelines (ADAAG) in 1991.[3] Current ADAAG contains general scoping and technical provisions (ADAAG 1 to 4) that apply to all types of facilities, and special application sections (ADAAG 5 to 12) that include additional scoping and technical provisions for certain types of facilities.[4] As discussed in more detail below, this final rule will amend section 4, and create a new section 15 (Recreation Facilities).

The Department of Justice is responsible for issuing regulations to implement titles II and III of the ADA. The regulations issued by the Department of Justice must include accessibility standards for newly constructed and altered facilities covered by titles II and III of the ADA. The standards must be consistent with the minimum accessibility guidelines issued by the Access Board. The Department of Justice has adopted ADAAG as the Standard for Accessible Design for title III of the ADA.[5]

This final rule amends ADAAG by adding a new special application section for amusement rides, boating facilities, fishing piers and platforms, golf courses, miniature golf, sports facilities, and swimming pools and spas. This rulemaking has had a long history. In 1993, the Access Board established an advisory committee of 27 members to make recommendations on guidelines for recreation facilities. The Recreation Access Advisory Committee met from July 1993 to May 1994 and submitted a report to the Board, ''Recommendations for Accessibility Guidelines: Recreational Facilities and Outdoor Developed Areas''. After receiving the committee's report, the Board published it as an advance notice of proposed rulemaking (59 FR 48542, September 21, 1994). Over 600 comments were received on the report and questions asked in the advance notice. To obtain additional information for this rulemaking, the Board also sponsored research on access to swimming pools in 1995; held informational meetings and conducted site visits on access to miniature golf facilities in September 1996; and held informational meetings and conducted site visits on accessible amusement rides in December 1999 and March and April 2000.

A notice of proposed rulemaking (NPRM) was published in the **Federal Register** on July 9, 1999. (64 FR 37326, July 9, 1999). The comment period was originally scheduled to close on November 8, 1999, but was extended until December 8, 1999 to allow more time for the public to submit comments. These comments were submitted electronically, in writing, and as oral testimony received during two public hearings held in Dallas, TX (August 26,

[1] *See* 42 U.S.C. 12101 *et seq.* (*http://www.usdoj.gov/crt/ada/pubs/ada.txt*).

[2] The Access Board is an independent Federal agency established by section 502 of the Rehabilitation Act whose primary mission is to promote accessibility for individuals with disabilities. The Access Board consists of 25 members. Thirteen are appointed by the President from among the public, a majority of whom are required to be individuals with disabilities. The other twelve are heads of the following Federal agencies or their designees whose positions are Executive Level IV or above: The Departments of Health and Human Services, Education, Transportation, Housing and Urban Development, Labor, Interior, Defense, Justice, Veterans Affairs, and Commerce; General Services Administration; and United States Postal Service.

[3] *See* 36 CFR part 1191, Appendix A (*http://www.access-board.gov/adaag/html/adaag.htm*).

[4] The special application sections cover the following facilities: restaurants and cafeterias (ADAAG 5); medical care facilities (ADAAG 6); business, mercantile and civic (ADAAG 7); libraries (ADAAG 8); transient lodging (ADAAG 9); transportation facilities (ADAAG 10); judicial, legislative, and regulatory facilities (ADAAG 11); and detention and correctional facilities (ADAAG 12). ADAAG 13 is reserved for housing and ADAAG 14 is reserved for public rights-of-way.

[5] *See* 28 CFR part 36, Appendix A (*http://www.usdoj.gov/crt/ada/reg3a.html*). The Department of Justice standards currently include ADAAG 1 to 10. State and local governments currently have the option of using ADAAG or an earlier standard, the Uniform Federal Accessibility Standards (UFAS), when constructing or altering facilities under the Department of Justice regulations for title II of the ADA. *See* 28 CFR 35.151(c) (*http://www.usdoj.gov/crt/ada/reg2/html*). The Department of Justice has issued a notice of proposed rulemaking to eliminate this option. 59 FR 31808 (June 20, 1994).

1999) and Boston, MA (November 17, 1999). Over 200 people attended these hearings and approximately 54 people provided testimony. The Board received approximately 300 comments during the public comment period.

The Access Board created an ad hoc committee of Board members to review the comments received on the proposed rule. The ad hoc committee discussed significant issues associated with the comments and made recommendations to the full Board for the final rule. In an effort to provide the public with more opportunities for input into the provisions for the final rule, on July 21, 2000 the Board published a summary of the ad hoc committee's recommendations and put the summary in the rulemaking docket for public review (65 FR 4533, July 21, 2000). The comment period on the summary closed on September 19, 2000. Approximately 70 comments were received during the public comment period. Afterwards, the Board held informational meetings on the summary in Washington, DC (August 21–22, 2000) and San Francisco, CA (September 6–7, 2000).

**General Issues**

*Incorporating the Final Rule on Recreation Facilities Into Future Revisions to ADAAG*

A complete review of ADAAG has been underway for several years. ADAAG was first published on July 26, 1991. The Board is committed to ensuring that ADAAG continues to reflect technological developments and is improved in terms of usability. Efforts also include coordination with changes in national standards and model code organizations and reconciling differences between ADAAG and national consensus standards, where possible. The Board published a notice of proposed rulemaking on November 16, 1999 with proposed revisions to ADAAG. The Board plans to issue final changes to ADAAG in the near future.

The Board is issuing the final guidelines for recreation facilities prior to the publication of the final ADAAG revision. The Board then plans to incorporate these final guidelines into the final revisions to ADAAG. To effectively incorporate these guidelines into the new format, some minor formatting changes will be made. For instance, the revised ADAAG will include a new format and numbering system. This rule will need to be formatted to fit that system. Some of the provisions will also be modified slightly to avoid redundancy. No substantive changes to the text are planned. Once incorporated, the Board will develop a guide to assist users with the new ADAAG.

The incorporation of the final recreation guidelines into the revised ADAAG will enhance the usability of the accessibility guidelines for architects, designers, manufacturers, operators and others using ADAAG. For example, accessibility guidelines for accessible parking spaces, toilet rooms, amusement rides, swimming pools, and exercise facilities will be combined into one document. Other improvements in the format of ADAAG will reduce redundancy through the use of basic technical provisions known as ''building blocks,'' which will provide consistent dimensions for clear spaces, turning spaces, and knee and toe clearances for elements. These basic technical provisions will apply unless otherwise modified in the section containing accessibility guidelines for recreation facilities. For example, handrail requirements for sloped entries into swimming pools modify the requirements otherwise required in the ramp provisions (ADAAG 4.8.5).

*Multiple Chemical Sensitivities and Electromagnetic Sensitivities*

Individuals with multiple chemical sensitivities and electromagnetic sensitivities submitted a substantial number of written comments and attended the public information meetings on the draft final rule. They reported that chemicals used in recreation facilities, such as chlorine used in swimming pools and spas, and pesticides and synthetic fertilizers used on golf courses, are barriers that deny them access to those facilities. They requested the Board to include provisions in the final rule to make recreation facilities accessible for them.

The Board recognizes that multiple chemical sensitivities and electromagnetic sensitivities may be considered disabilities under the ADA if they so severely impair the neurological, respiratory or other functions of an individual that it substantially limits one or more of the individual's major life activities. The Board plans to closely examine the needs of this population, and undertake activities that address accessibility issues for these individuals.

The Board plans to develop technical assistance materials on best practices for accommodating individuals with multiple chemical sensitivities and electromagnetic sensitivities. The Board also plans to sponsor a project on indoor environmental quality. In this project, the Board will bring together building owners, architects, building product manufacturers, model code and standard-setting organizations, individuals with multiple chemical sensitivities and electromagnetic sensitivities, and other individuals. This group will examine building design and construction issues that affect the indoor environment, and develop an action plan that can be used to reduce the level of chemicals and electromagnetic fields in the built environment.

Neither the proposed rule nor the draft final rule included provisions for multiple chemical sensitivities or electromagnetic sensitivities. The Board believes these issues require a thorough examination and public review before they are addressed through rulemaking. The Board does not address these issues in the final rule.

*Existing Recreation Facilities*

The Board received a significant number of comments related to the impact of these accessibility guidelines on existing facilities. Some commenters interpreted the proposed rule and the draft final rule to require all existing recreation facilities or elements of these facilities to be modified to meet the new accessibility guidelines. They expressed concern that the guidelines would have a significant economic impact on existing recreation facilities.

To clarify, ADAAG and the final accessibility guidelines for recreation facilities apply to newly designed or newly constructed buildings and facilities and to existing facilities when they are altered. ADAAG and the Department of Justice regulations address whether a change to a building or facility is considered an alteration. The publication of this final rule does not require that all existing facilities be modified to meet these guidelines. State and local governments who provide recreation facilities have a separate obligation under title II of the ADA to provide program accessibility which may require the removal of architectural barriers in existing facilities. *See* 28 CFR 35.150 (*http://www.usdoj.gov/crt/ada/reg2.html*). Private entities who own, lease (or lease to), or operate recreation facilities have a separate obligation under title III of the ADA to remove architectural barriers in existing facilities where it is readily achievable (*i.e.*, easily accomplishable and able to be carried out without much difficulty or expense). *See* 28 CFR 36.304 (*http://www.usdoj.gov/crt/ada/reg3a.html*).

Federal tax credits and deductions are available to private entities for architectural barrier removal in existing facilities. Federal funds also are available through the Community Development Block Grant Program to

remove architectural barriers in existing facilities. State and local governments may use Community Development Block Grant funds to remove architectural barriers in publicly and privately operated facilities. Entities requesting guidance on their obligations for existing facilities should contact the Department of Justice.

*Equivalent Facilitation*

Commenters addressing various sections of the recreation rule indicated the need for flexibility in designing and constructing accessible recreation facilities and elements. Commenters wanted to ensure that alternative designs would be permitted for providing accessibility with some of the unique elements and facilities addressed in this rule. Specific concerns were raised in comments related to accessible amusement rides and miniature golf courses.

The Board recognizes that many of the facilities and elements addressed in this rule are unique and supports the need for flexibility in making them accessible. Section 2.2 of ADAAG currently permits ''departures from particular technical and scoping requirements of this guideline by the use of other designs and technologies * * * where the alternative designs and technologies used will provide substantially equivalent or greater access to and usability of the facility.'' This provision applies to all facilities and elements addressed by ADAAG, including recreation facilities.

*Section-by-Section Analysis*

This section of the preamble contains a concise summary of the final rule and an analysis of the comments the Board received on each section. The final rule amends several existing sections of ADAAG and adds a new special application section. Section 4 of ADAAG has been amended to include provisions addressing miscellaneous sports facilities and elements as explained below.

*Miscellaneous Sports Facilities and Elements*

The accessibility guidelines for recreation facilities are primarily set forth in Section 15. Several changes, however, were also required within ADAAG section 4 to adequately address some of the unique sports facilities and elements.

*Section 3.5 Definitions ''Area of Sport Activity''*

An area of sport activity is defined as ''that portion of a room or space where the play or practice of a sport occurs.'' The term is defined in order to clarify the requirements for connecting an accessible route with this type of space. The term is used broadly to define spaces where the play or practice of a sport occurs. It includes, but is not limited to, field sports such as softball, football, lacrosse, baseball, and soccer; court sports such as tennis, racquetball, and volleyball; and other sports such as gymnastics.

*Comment.* A few commenters suggested that further clarification would be helpful in the use of the term ''sport'' and ''practice'' of a sport.

*Response.* Providing an exhaustive list of sports is not practical, since it may inadvertently omit a sport, or fail to recognize an emerging sport of the future. The ''area of sport activity'' will vary from sport to sport. Exceptions to technical provisions in ADAAG 4.1.2 (3) and (4) and 4.1.3 (2) and (3) clarify that accessibility is not required in the ''area of sport activity.'' This is consistent with the recommendations of the Recreation Access Advisory Committee and supports access to each ''area of sport activity,'' while not affecting the nature of the sport.

*Section 4.1.1(5)(b) General Exceptions*

The following recreation facilities or portions of recreation facilities are exempt from accessibility requirements: Raised structures used for refereeing, judging, or scoring a sport; water slides; animal containment areas not for public use; and raised boxing rings and wrestling rings.

*Comment.* The proposed rule exempted structures used solely for refereeing a sport. A commenter questioned whether structures used for ''judging'' or ''scoring'' a sport would also be considered exempt.

*Response.* The exception has been modified in the final rule to include the term ''judging'' and ''scoring.'' The Board considers the structures used for these activities to be consistent with the intent of this exception.

*Comment.* The proposed rule did not include any specific requirements for access to water slides. Question 4 in the proposed rule requested comments on this issue. Most of the commenters did not support providing access to the top of water slides. A few commenters suggested that access be required to the top of smaller water slides with an exemption for larger slides.

*Response.* An exception has been added in the final rule exempting water slides, including the structure supporting the water slide, from the guidelines. Providing access to water slides would require extensive ramping or elevators which would make the slides cost prohibitive. Designers and operators are encouraged to provide access to smaller water slides, where possible. Recent designs for ''leisure pools'' have incorporated an accessible route to the top of water slides using the different elevations on a site. These designs provide increased access for individuals with disabilities.

*Comment.* The proposed rule did not specifically address access to ''life guard stands.'' A few commenters recommended that structures such as life guard stands be addressed.

*Response.* ADAAG 4.1.1(5)(b) specifically exempts life guard stands and was added during a rulemaking for State and local government facilities (63 FR 2000, January 13, 1998).

*Comment.* The proposed rule included exceptions to technical provisions for accessible routes in animal containment areas. The International Association of Amusement Parks and Attractions expressed concern about general requirements for accessibility in animal containment areas that are not open to the public and are specifically limited to animal handlers.

*Response.* An exception has been added in the final rule to clarify that accessibility is not required to animal containment areas that are not for ''public use.'' Where animal containment areas are open to public use such as petting farms, the provisions of ADAAG 4.3 apply. Several exceptions to the provisions of ADAAG 4.3 in animal containment areas are also included in the final rule.

*Comment.* The proposed rule exempted raised boxing rings from accessibility. A few commenters suggested that raised wrestling rings be added to this exception.

*Response.* The exception has been modified in the final rule to add wrestling rings to the exemption.

*Section 4.1.2(2)(b) and 4.1.3(1)(b) Accessible Routes for Court Sports*

These sections are amended to require an accessible route complying with ADAAG 4.3 to directly connect both sides of the court in court sports.

*Comment.* The proposed rule required an accessible route to connect both sides of the court in court sports. The American Institute of Architects (AIA) was concerned that an accessible route connecting the two sides of a court may not be a direct route and could require one to go around a multitude of courts to get to the other side of the court where a sport requires changing sides. This is especially critical in sports such as tennis, where changing sides of the court is part of the game.

*Response.* The accessible route must be a direct route from one side of the court to the other side. Requiring players on one side of the court to traverse through or around another court to get to the other side is not permitted.

*Section 4.1.2(3) and 4.1.3(2) Protruding Objects in Areas of Sport Activity*

Areas of sport activity are exempt from the requirements of ADAAG 4.4 (Protruding Objects).

No substantive comments were received and no changes have been made for the final rule.

*Section 4.1.2 (4) and 4.1.3(3) Ground Surfaces in Areas of Sport Activity and Animal Containment Areas*

Two exceptions are added to these sections which require ground surfaces along accessible routes and in accessible spaces to comply with ADAAG 4.5. ADAAG 4.5 requires ground and floor surfaces along accessible routes to be stable, firm, and slip resistant. ADAAG 4.5 also addresses changes in level (ADAAG 4.5.2), carpet (ADAAG 4.5.3), and gratings ADAAG (4.5.4). Exception 1 exempts areas of sport activity from all requirements of ADAAG 4.5. Exception 2 exempts animal containment areas designed and constructed for public use from the requirements of ADAAG 4.5.2 and from providing a stable, firm, and slip resistant ground or floor surface.

*Comment.* The proposed rule required an accessible route to connect to each area of sport activity. A commenter questioned the feasibility of this requirement when connecting multiple sand volleyball courts on a beach.

*Response.* The final rule requires an accessible route to each area of sport activity in newly constructed facilities. For example, where a new sports field is planned with multiple fields, an accessible route is require to each field.

With respect to sand volleyball courts located at beaches, the Board plans to more specifically address the accessible route requirement in a future rulemaking on outdoor facilities, including trails, picnic and camping facilities, and beaches. It is expected that this future rule will address accessible routes on beaches, including their location to various elements on a beach.

*Comment.* The proposed rule exempted animal containment areas for hoofed animals from the requirements of a stable, firm, and slip resistant surface. Commenters questioned why the exception was limited to ''hoofed'' animal containment areas. Others suggested that other provisions such as ADAAG 4.5.2 (Changes in Level) not apply within these areas.

*Response.* This exception has been amended in the final rule to include all animal containment areas and is not limited to those for ''hoofed'' animals. The Board agrees that there often are areas where many different types of animals are contained and are not limited solely to hoofed animals. Exemption from the requirements to ADAAG 4.5.2 (Changes in Level) has also been included since absorbent surfaces used to ensure the care and health of animals may conflict with this provision. As previously discussed, an exception has been added to ADAAG 4.1.1(5)(b) to clarify that accessibility is not required in animal containment areas that are not for public use.

*Section 4.1.3(5) Exception 4(f) Platform Lifts for Team or Player Seating Areas*

An exception is added to this section permitting the use of a platform lift in new construction as a means of providing access to team or player seating areas serving areas of sport activity.

*Comment.* The proposed rule did not include an option to use a platform lift in new construction to provide access to team or player seating areas. The AIA and several architects representing a firm that specializes in sports facilities commented that platform lifts should be an option. They were particularly concerned about providing access to dugouts and other recessed team player seating areas in major league stadiums. They believed that providing a ramp parallel to the playing field presents a dangerous tripping and falling hazard for players attempting to field foul balls. Other groups representing persons with disabilities commended the Board for not allowing platform lifts in this environment in new construction. Among other issues, they cited the problems associated with relying on a mechanical device to provide access in newly constructed buildings and facilities.

*Response.* The final rule includes an option to use a platform lift as part of an accessible route connecting team or player seating areas. While the Board includes this as an option in new construction, it is recommended that where possible, ramps be utilized. This will reduce reliance for persons with disabilities on a mechanical device when providing access. Several minor league stadiums have incorporated a ramp into their design in recent years. It is the Board's understanding that there have been no reported incidents of accidents related to the ramps. Information on major league stadiums is not available since ramps have not been incorporated into their designs.

*Section 4.1.3(12)(c) Lockers*

This section is amended to require that where lockers are provided, at least 5 percent, but not less than one, of each type of locker, must comply with ADAAG 4.25.

No substantive comments were received and no changes have been made for the final rule.

*Section 4.1.3(13) Controls and Operating Mechanisms for Exercise Equipment and Machines*

An exception is added to this section to exempt exercise machines from the requirements of ADAAG 4.27 (Controls and Operating Mechanisms).

No substantive comments were received and no changes have been made for the final rule.

*Section 4.1.3(19)(c) Team or Player Seating Areas*

This section is amended to require that where team or player seating areas contain fixed seats and serve an accessible area of sport activity, the seating area must contain the number of wheelchair spaces required by ADAAG 4.1.3(19)(a), but not less than one space. Wheelchair spaces must comply with ADAAG 4.33.2, 4.33.3, 4.33.4, and 4.33.5.

An accessible route is required to connect to the team player seating areas. An accessible route is also required to connect to the area of sport activity which is defined as ''that portion of a room or space where the practice or play of a sport occurs.'' For the most part, the requirement is intended to provide access to the boundary of where the sport is played. In some cases, this will provide for a ''level'' entry to the area of sport activity such as a softball field or football field. In other cases, there may be changes in level and non-accessible surfaces. The Board recognizes that the accessible route requirement may, in some cases, not ensure access directly onto the area of sport activity. Where possible, designers are encouraged to provide for a smooth transition to the area of sport activity. This requirement is not intended to change the nature of the sport to provide access.

*Comment.* The AIA questioned how wheelchair spaces in team or player seating areas could meet the requirements of ADAAG 4.33.3. ADAAG 4.33.3 requires, among other things, that the wheelchair spaces provide a choice of admission prices or lines of sight

comparable to those afforded members of the general public.

*Response.* An exception has been added in the final rule exempting the wheelchair spaces in team or player seating areas from requirements related to choice of admission price or lines of sight comparable to those for members of the general public. Section 4.1.3(19)(c) is intended to ensure that at least one wheelchair space is provided in team or player seating areas. This can easily be accomplished through clear space adjacent to a fixed bench, for example. Bench seating will also serve as companion seating. Where designers and operators are planning facilities to serve a variety of wheelchair sports, it is recommended that the minimum be exceeded to more adequately accommodate wheelchair sports team.

Exception 2 is added to clarify that the requirements for accessible team or player seating does not apply to bowling lanes that are not required to be on an accessible route. Section 15.7.3 requires 5 percent, but not less than one, of each type of bowling lane to be served by an accessible route. Only those team or player seating areas that serve the bowling lanes required to be on an accessible route must have accessible team or player seating.

*Comment.* The proposed rule included an exception to ADAAG 4.1.3(19) for assembly seating in amusement facilities. The exception permitted use of a transfer seat complying with 15.1.4 where the motion of the seats is an integral part of the amusement experience. A few commenters questioned why this was permitted and recommended that wheelchair spaces be designed so as to provide the same general experience or effects as other seats.

*Response.* This exception has been deleted in the final rule. The Board is aware of amusement facilities where the various effects provided within the show are also provided at the wheelchair space. Many of the effects, such as misting or smoke, may be easy to incorporate into the wheelchair space. Others effects, such as aggressive seat motion, may be extremely difficult to incorporate and may possibly be unsafe. The Board expects that designers will provide the same effects for the wheelchair space as other seats, to the extent possible. An appendix note also recommends that providing companion seats with removable armrests will provide an option for persons using wheelchairs to transfer into the seat in these venues, if desired.

*Section 4.1.3(21) Dressing, Fitting, or Locker Rooms*

This section requires that where dressing, fitting, or locker rooms are provided, the rooms must comply with ADAAG 4.35. An exception permits 5 percent, but not less than one, of the rooms to be accessible when they are provided in a cluster.

No substantive comments were received and no changes have been made for the final rule.

*Section 4.1.3(22) Saunas and Steam Rooms*

This section requires where saunas and steam rooms are provided, the rooms must comply with ADAAG 4.36. An exception permits 5 percent, but not less than one, of the rooms to be accessible when they are provided in a cluster.

No substantive comments were received and no changes have been made for the final rule.

*Section 4.35 Dressing, Fitting, and Locker Rooms*

*Section 4.35.1 General*

This section requires dressing, fitting, and locker rooms required to be accessible by ADAAG 4.1 to comply with ADAAG 4.35 and to be on an accessible route.

No substantive comments were received and no changes have been made for the final rule.

*Section 4.35.4 Benches in Accessible Dressing Rooms, Fitting Rooms, and Locker Rooms*

This section requires benches complying with ADAAG 4.37 in accessible dressing, fitting, and locker rooms.

No substantive comments were received and no changes have been made for the final rule.

*Section 4.36 Saunas and Steam Rooms*

*Section 4.36.1 General*

This section requires saunas and steam rooms required to be accessible by ADAAG 4.1 to comply with ADAAG 4.36.

*Comment.* Several commenters questioned whether an operator would be required to provide a heat resistant wheelchair in accessible saunas and steam rooms.

*Response.* The provision of heat resistant chairs is an operational issue and outside the jurisdiction of the Board. Questions regarding the operational issues related to the use of accessible facilities and elements will be addressed by the Department of Justice when it adopts accessibility standards for recreation facilities.

*Section 4.36.2 Wheelchair Turning Space*

This section requires wheelchair turning space complying with ADAAG 4.2.3 to be provided within a sauna or steam room. An exception permits the wheelchair turning space to be obstructed by readily removable seats.

*Comment.* The proposed rule permitted the maneuvering space to be ''temporarily'' obstructed by readily removable seats. Commenters questioned what would be considered ''temporary''.

*Response.* The term ''temporarily'' has been deleted in the final rule. The intent of the provision is to permit a seat or bench to be located within the required maneuvering space within a room, provided that it can be readily removed. The focus of the exception is on the seat being ''readily removable'' to enable persons using wheelchairs to avail themselves of smaller saunas and steam rooms.

*Section 4.36.3 Sauna and Steam Room Bench*

This section requires that where seating is provided in a sauna or steam room, at least one bench complying with ADAAG 4.37 must be provided. An exception permits the clear floor space required by ADAAG 4.37.1 to be obstructed by readily removable seats.

*Comment.* The proposed rule permitted readily removable seats to ''temporarily'' obstruct the clear floor space and commenters questioned what would be considered ''temporary''.

*Response.* As discussed above, the term ''temporarily'' has been deleted in the final rule.

*Section 4.36.4 Door Swing*

This section requires that doors shall not swing into any part of the clear floor space required at an accessible bench.

No substantive comments were received and no changes have been made for the final rule.

*Section 4.37 Benches*

*Section 4.37.1 General*

Benches required to be accessible by 4.1 must comply with 4.37. No substantive comments were received and no changes have been made for the final rule.

*Section 4.37.2 Clear Floor or Ground Space*

This section requires clear floor or ground space complying with ADAAG 4.2.4 to be provided and be positioned for a parallel approach to a short end of

a bench seat. An exception permits the clear floor or ground space required by 4.37.2 to be obstructed by readily removable seats in saunas and steam rooms.

No substantive comments were received and no changes have been made to this provision in the final rule.

*Section 4.37.3 Size*

The final rule requires benches to be fixed and have seats that are 20 inches minimum to 24 inches maximum in depth and 42 inches minimum in length.

*Comment.* A few comments questioned whether a portable bench would meet the requirements for accessible benches.

*Response.* This provision has been modified in the final rule to include the term ''fixed''.

*Section 4.37.4 Back Support*

This section requires benches to have back support that is 42 inches minimum in length and that extends from a point 2 inches maximum above the seat to a point 18 inches minimum above the bench.

*Comment.* The proposed rule included the requirement for back support under ADAAG 4.37.2 (Size). Commenters expressed confusion over the requirements for back support for benches and some questioned whether back support was required.

*Response.* Back support is required for an accessible bench in a sauna or steam room, or a dressing room. To clarify this requirement, the technical provisions that were part of ADAAG 4.37.2 in the proposed rule have been included in a separate provision, ADAAG 4.37.3, in the final rule.

*Section 4.37.5 Seat Height*

This section requires benches to be 17 inches minimum to 19 inches maximum above the floor or ground.

No substantive comments were received and no changes have been made for the final rule.

*Section 4.37.6 Structural Strength*

This section requires that benches be strong enough to withstand a vertical or horizontal force of 250 pounds applied at any point on the seat, fastener, mounting device, or supporting structure.

No substantive comments were received and no changes have been made for the final rule.

*Section 4.37.7 Wet Locations*

This section requires that where installed in wet locations, the surface of benches must be slip-resistant and shall not accumulate water.

No substantive comments were received and no changes have been made for the final rule.

*Section 10.5 Boat and Ferry Docks*

This section is deleted in the final rule.

*Comment.* The proposed rule applied the accessibility guidelines for recreational boating facilities to boat and ferry docks located at transportation facilities, covered by ADAAG Section 10. This section of the proposed rule received little comment.

*Response.* The Board is concerned that those involved in the design and construction of boat and ferry docks may not have been fully aware of the proposed rule and therefore may not have evaluated its impact on such facilities. In addition, through the proposed rule, the Board sought information to establish access provisions for gangways based on the size of vessels using floating piers. Few commenters responded to the question, and none provided the type of information the Board was seeking.

The Board is not addressing commercial boat and ferry docks at transportation facilities at this time. In the future, the Board will consider whether such transportation facilities should be treated differently than recreational boating facilities covered by 15.2. As a result, ADAAG 10.5 has been deleted.

*Section 15 Recreation Facilities*

Section 15 has been added to ADAAG and contains accessibility guidelines for amusement rides, boating facilities, fishing piers and platforms, golf courses, miniature golf courses, exercise equipment and machines, bowling lanes, shooting facilities, and swimming pools and spas. Unless otherwise modified in section 4 or specifically addressed in 15, all other ADAAG provisions apply. For example, special technical provisions have not been included in section 15 for toilet rooms or for accessible parking. In this case, other appropriate provisions in ADAAG 4.22 and ADAAG 4.6 apply. The accessibility guidelines for play areas, which were issued on October 18, 2000 (65 FR 62498) are reprinted in Section 15.

*Comment.* A few commenters suggested that the term ''recreation facilities'' be defined. They suggested that the lack of definition leaves some doubt about how to apply the provisions in this section. They questioned whether locker rooms for a professional sports team, for example, would be considered a ''recreation facility''.

*Response.* Recreation facilities is not defined in the final rule. The term is used generally to address the types of elements and facilities covered by this section. The term is inclusive and applies to buildings and facilities designed and constructed for recreation, as well as elements and spaces located in a facility. For example, section 15.7.1 would apply to exercise equipment and machines located in an office building as a part of employee health club. Also, these provisions would apply to locker rooms for professional and other sports teams.

*Section 15.1 Amusement Rides*

Significant comment on amusement ride accessibility was received on the proposed rule. The proposed rule would have required that one wheelchair space and one transfer seat be provided for each 100 seats on new amusement rides and proposed technical provisions for the wheelchair spaces and transfer seats. The majority of comments were from amusement park operators, and amusement ride manufacturers and designers. The Board also received comments from groups representing persons with disabilities.

Overall, commenters did not support the provisions in the proposed rule for access to amusement rides. The commenters stated that the proposed rule lacked flexibility, making it impossible for most rides to comply with the guidelines given the uniqueness of this industry. They also raised concern about the lack of available manufactured rides that would meet the proposed provisions. Most rides are manufactured outside the United States where there is an absence of accessibility requirements. The ride manufacturers in the United States indicated significant hardship on their businesses to retool to meet some of the proposed technical provisions. Amusement park operators interpreted the proposed rule to require operators to modify manufactured rides. Most indicated that they were either unwilling or unable to modify a ride in a way that would differ from the manufacturer's specifications because they were not willing to accept the liability associated with modifying the ride or did not have sufficient engineering expertise to do so.

Additionally, several groups representing persons with disabilities expressed concern that some rides, such as walk through attractions and fun houses, would be exempt along with rides in traveling carnivals. They wanted the accessibility guidelines to encourage ride manufacturers to make all rides accessible. The Eastern

Paralyzed Veterans Association (EPVA) wanted the number of accessible amusement rides to be doubled from the proposed rule.

Because of these comments, the Board held several information meetings with representatives from the amusement industry and others to gather additional information. Site visits were also made to several amusement parks to better understand the issues raised. The information gained from these meetings and site visits have shaped the amusement ride section of the final rule.

Based on this information, the final rule differs significantly from the proposed rule. The final rule makes major changes in the number of accessible spaces per ride and in the options for providing access. It also includes different requirements for wheelchair spaces and for ride seats designed for individuals to transfer from their wheelchair or other mobility device. The final rule provides the flexibility requested by commenters in this unique environment, while still providing a high level of accessibility to persons with disabilities.

Since this is the first time national accessibility guidelines have been established for amusement rides, the Board intends to monitor the implementation of these guidelines. As with other accessibility guidelines developed by the Board, future updates and revisions are planned to ensure that the guidelines reflect new designs and technology.

*Section 3.5 Definitions*

Three terms are defined for amusement rides.

An ''amusement ride'' is a system that moves persons through a fixed course within a defined area for the purpose of amusement. Editorial changes are made in the final rule to be consistent with terms used within the amusement industry.

*Comment.* A few commenters questioned whether this section would apply to a ski lift, tram, or a gondola. Trams and gondolas are provided at some amusement parks.

*Response.* Section 15.1 is not intended to apply to ski lifts, trams, or gondolas. These devices are designed primarily for the purpose of transporting people from one point to another. While a ride on a ski lift or tram may be enjoyable, it is not designed primarily for the ''purpose of amusement''. Trams and similar vehicles are already addressed in the ADA Accessibility Guidelines for Transportation Vehicles (Vehicle Guidelines). *See* 36 CFR 1192.179.

An ''amusement ride seat'' is defined as a seat that is built-in or mechanically fastened to an amusement ride intended to be occupied by one or more passengers. This is a new term which has been added to the final rule. ''Amusement ride seats'' are referenced in several of the technical provisions.

*Comment.* The proposed rule did not include the term ''amusement ride seat.'' Several commenters including those representing the International Association of Amusement Parks and Attractions (IAAPA) questioned the differences between the transfer seat and the amusement ride seat in the proposed rule. Questions were also raised about the application of the guidelines to rides without seats or those designed with a variety of riding postures, such as toboggan style.

*Response.* A definition for amusement ride seats is added to the final rule. The Board intends the guidelines to apply to amusement rides with seats. Specific technical provisions included in this section address clear floor or ground space and maneuvering space requirements for amusement ride seats where transfer access is provided. Technical provisions focus on ensuring that people can transfer from their wheelchairs or mobility aids to the ride seats. With respect to the various riding postures, the Board intends these guidelines to apply to those amusement rides with ride seats, including toboggan style, but not to those amusement rides where the rider is expected to be in the prone position or standing. In these cases, however, an accessible route complying with ADAAG 4.3 is required to the load and unload area.

A ''transfer device'' is defined as equipment designed to facilitate the transfer of a person from a wheelchair or other mobility device to and from an amusement ride seat. Several new scoping and technical provisions included in the final rule specify a ''transfer device.'' An appendix note provides additional information on available transfer devices, including ways to provide equipment that will provide for a safe and independent transfer from a wheelchair or other mobility device.

*Section 15.1.1 General*

Newly designed or newly constructed and altered amusement rides are required to comply with 15.1.1. Four exceptions are included in the final rule. Under Exception 1, portable or mobile amusement rides are not covered by the guidelines. Exceptions 2, 3, and 4 clarify that amusement rides that are controlled or operated by the rider; amusement rides designed primarily for children, where children are assisted on and off the ride by an adult; and amusement rides without amusement ride seats are only required to comply with 15.1.4 and 15.1.5, which requires an accessible route to and maneuvering space in the load and unload areas.

*Comment.* Amusement park operators requested clarification regarding how the guidelines apply to existing rides.

*Response.* As previously mentioned, the final rule is significantly different from the proposed rule. The term ''new'' is included in 15.1.1 to clarify that this section applies to ''new'' rides and not to existing rides. The Department of Justice has the rulemaking authority to address existing rides.

A custom manufactured ride is new upon its ''first use'', which is the first time amusement park patrons take the ride. With respect to amusement rides purchased from other entities, ''new'' refers to the first permanent installation of a ride, whether the ride is used ''off the shelf'' or is modified before it is installed. The application of these guidelines to existing amusement rides that are altered is discussed elsewhere in this preamble. The final rule provides operators with the requested flexibility. Providing opportunities for access for persons with disabilities may be accomplished under the final rule without modifying the ride itself.

*Comment.* The preamble of the proposed rule explained that the guidelines applied to permanent amusement rides with fixed seats that are set up for a long duration and are not regularly assembled and disassembled. Amusement rides set up for short periods of time such as rides that are part of traveling carnivals, State and county fairs, festivals, and other special events are not addressed by these guidelines. The majority of amusement ride manufacturers supported this approach and considered it appropriate given the uniqueness of these rides. However, the commenters were concerned that the proposed rule did not specifically exempt temporary rides. Others suggested that a time frame be attached to this concept of ''temporary'' to clarify specifically what is meant. They suggested a 90 day or less time frame be used to define how long such rides can operate at the same location. Several groups representing persons with disabilities believed that temporary rides should also be accessible. They believed that manufacturers should be encouraged to make temporary rides as accessible as permanent rides.

*Response.* Exception 1 is added to specify that mobile or portable amusement rides are not covered by

15.1. The Department of Justice is authorized to determine the applicable requirement for these rides.

While mobile rides are not specifically addressed by these guidelines, other ADA requirements including general nondiscrimination obligations, program accessibility, and barrier removal provisions of the ADA apply to covered entities operating mobile or portable amusement rides. Mobile amusement rides are subject to a variety of site conditions that affect the load and unload areas. Because the rides are transported over the road, their size and weight is also restricted. This can limit the size available for the load and unload areas along with the accessible route to the ride.

Ride operators and manufacturers are encouraged to apply the provisions of this section to mobile amusement rides, where possible. Mobile rides are available that provide roll-on access and others may be close to providing transfer access with some minor adaptations in the load and unload areas. The Board will, upon request, work with interested manufacturers to provide guidance on providing either roll-on access or transfer access for someone using a wheelchair or mobility device.

*Exception 2*

*Comment.* The proposed rule excluded from the definition of amusement rides, those rides which are controlled or operated by the rider such as bumper cars and go-carts. A few commenters suggested that these types of rides also be addressed by this section. Several commenters requested guidance on whether making a ride turn faster or shake faster would be considered ''control''.

*Response.* An exception has been added to the final rule for rides that are controlled by the rider requiring such rides to only provide an accessible route to the ride and maneuvering space in the load and unload areas. The Board plans to gather additional information for making these rides accessible for potential rulemaking in the future. In the interim, designers and operators may use the applicable provisions in ADAAG and this final rule as a guide in providing access.

With respect to the issue of control, the exception is not intended to apply to those rides where patrons may affect some incidental movements of the ride, but otherwise have no control.

*Exception 3*

*Comment.* The proposed rule did not distinguish between those rides designed for adults and those designed for young children, also known as ''kiddie rides.'' Many amusement park operators and ride manufacturers commented that ''kiddie rides'' should be exempt from compliance with the provisions of 15.1.1. Most indicated that size restrictions will prohibit compliance with several of the provisions.

*Response.* Because of their size restrictions, an exception has been added to the final rule for ''kiddie'' rides requiring such rides to only provide an accessible route to and maneuvering space in the load and unload area. The requirement for an accessible route will provide access for adults and family members assisting children on and off these rides. An amusement industry definition for ''kiddie rides'' includes rides designed for children up to the age of 12. The Board does not support an exemption for rides designed for children up to age 12. Rather, the exception is limited to those rides designed ''primarily'' for children, where children are assisted on and off the ride by an adult. The Board intends that this exception be limited to those rides designed for children and not for the occasional adult user.

*Exception 4*

*Comment.* Some commenters interpreted the proposed rule to apply to amusement rides without seats.

*Response.* Section 15.1 of the proposed rule limited the application of this section to rides ''containing fixed seats''. Exception 4 is added in the final rule to further clarify that 15.1 does not apply to amusement rides without ride seats. Amusement rides without seats are required to be served by an accessible route and connect to accessible load and unload areas.

*Section 15.1.2 Alterations to Amusement Rides*

Section 15.1 applies to amusement rides that are altered. This section clarifies that a modification to an existing amusement ride is an alteration if one or more of the following conditions apply: (1) The amusement ride's structural or operation characteristics are changed to the extent that the ride's performance differs from that specified by the manufacturer or the original design criteria; or (2) the load and unload area of the amusement ride is newly designed and constructed.

*Comment.* The majority of commenters questioned how the proposed rule applied to existing amusement rides. Many commenters believed that the guidelines require that all existing amusement rides be accessible. Others inquired about the requirements for existing rides that are modified and the type of modification that would trigger the alteration provisions.

*Response.* The final rule addresses alterations to existing amusement rides. *See* the discussion at the beginning of this preamble for further information on ADA obligations for existing amusement rides.

Where an existing amusement ride is modified in a way that does not change the ride's structural or operational characteristics to the extent that the ride's performance differs from that specified by the manufacturer's or original design criteria, the amusement ride is not required to comply with 15.1.1. Routine maintenance, painting, and changing of story boards are examples of activities that do not constitute an alteration.

As with other elements or facilities subject to the alterations provisions in ADAAG, ''technical infeasibility'' applies to alterations of amusement rides. In this case, compliance with the technical provisions is required except where the nature of the existing ride makes it virtually impossible to comply fully. In these circumstances, the alteration should provide the maximum accessibility feasible.

*Comment.* Commenters requested clarification regarding how the guidelines apply where amusement rides are moved.

*Response.* In response to this question, a provision has been added that requires a ride to be accessible when a new load and unload area is designed and constructed for the ride. This provision applies where a ride is moved either within a park or to another park and a new load and unload area is designed and constructed. The ride must comply with 15.1.1. Operators have a choice of providing either a wheelchair space, ride a seat designed for transfer, or a transfer device. In most cases with an existing amusement ride, providing a transfer device may be the most appropriate. This option does not require modification to the ride. Where an amusement ride is moved and the load and unload area is not modified, the provisions of 15.1.1 do not apply. In this case, the on-going obligations of ''readily achievable barrier removal'' or ''program accessibility'' will apply.

*Section 15.1.3 Number Required*

This section requires each amusement ride to provide at least one wheelchair space complying with 15.1.7, or at least one amusement ride seat designed for transfer complying with 15.1.8, or at least one transfer device complying with 15.1.9.

*Comment.* The proposed rule required one wheelchair space per 100 fixed seats and one transfer seat per 100 fixed seats to be provided on each amusement ride. An exception permitted two transfer seats in lieu of a wheelchair space where a wheelchair space is not operationally or structurally feasible. Significant comment was received on this provision during the comment period. Amusement park operators stated that the number of accessible spaces (both wheelchair and transfer seats) was too high. Several amusement park operators cited safety concerns with respect to evacuation where more than one wheelchair user may be on a ride at one time. Others expressed concern about lengthening the load and unload time. Groups representing persons with disabilities were concerned that the number of wheelchair spaces and transfer seats in the proposed rule was too low. The Eastern Paralyzed Veterans Association (EPVA) wanted the number doubled from the proposed rule, potentially requiring two wheelchair spaces and two transfer seats per ride.

*Response.* The final rule requires that each ride provide: (1) A wheelchair space, or (2) a ride seat designed for transfer, or (3) a device to facilitate the transfer of a person in a wheelchair from the load or unload area to a ride seat. This represents a decrease in the number of accessible spaces from the proposed rule and is no longer dependent on the number of seats per ride. Designers and operators have the choice of deciding which of the three types of access is appropriate for a given ride. Where a manufactured ride does not permit space for a wheelchair, for example, a ride seat designed for transfer or a transfer device may be provided to help an individual transfer into the ride seat.

The Board is aware of amusement rides in certain parks that currently exceed this minimum and provide more than one wheelchair space on a given ride. In these cases, more persons with disabilities and their families are able to ride at the same time. Amusement park operators are encouraged to exceed the minimum with their new rides.

*Section 15.1.4 Accessible Route*

This section requires that, when in the load and unload position, amusement rides with wheelchair spaces, or ride seats designed for transfer, or transfer devices, must be served by an accessible route complying with ADAAG 4.3. Any part of an accessible route serving amusement rides with a slope greater than 1:20 is considered a ramp and must comply with ADAAG 4.8. The accessible route is required only to the wheelchair space or transfer loading station, and not to all stations. This route can deviate from the main route in order to access the particular station designated.

Three new exceptions to 15.1.4 are provided in the final rule. Exception 1 exempts ramps from the maximum slope specified in ADAAG 4.8.2, where compliance with 4.8.2 is structurally or operationally infeasible, provided that the slope of the ramp may not exceed 1:8. Exception 2 exempts the requirements for handrails on the accessible route where compliance is structurally or operationally infeasible. Exception 3 permits that use of limited-use/limited-application elevators and platform lifts complying with ADAAG 4.11 to be part of an accessible route serving the load and unload area.

*Comment.* The proposed rule required an accessible route to connect the portion of the load and unload area serving each accessible amusement ride and to provide a maneuvering space with a slope not greater than 1:48. Commenters questioned whether the 1:48 slope applied to the accessible route on the ride and the appropriateness of this requirement for those rides where a transfer seat was provided.

*Response.* The requirements for an accessible route are maintained in the final rule, but are modified to clarify that at least one accessible route requirement applies when the ride is in the load and unload position. The requirement for a maneuvering space is moved to 15.1.4, which addresses the load and unload areas. The provision also clarifies that where the running slope serving the amusement ride or transfer devices is greater than 1:20, the provisions of ADAAG 4.8 apply.

*Comment.* Operators expressed concerns with the requirements of ADAAG 4.8 with respect to the maximum slope (1:12) and the maximum rise (30 inches) for the accessible route. They described rides where space limitations will prohibit long ramps and where fundamental changes to amusement rides would be necessary to comply with ADAAG 4.8.2.

*Response.* An exception is added in the final rule that exempts the accessible route serving accessible rides from the maximum slope specified in ADAAG 4.8.2, provided that the slope may not exceed 1:8. The exemption only applies where compliance with ADAAG 4.8.2 is ''structurally or operationally'' infeasible. The exception for structural or operational limitations is limited to that portion of the accessible route connecting the load and unload areas with the amusement ride. There is no exception for other portions of the accessible route, such as the queue line leading to the load and unload areas.

*Comment.* Ride operators and designers also stated that the requirement for handrails was not practical on the portion of the accessible route connecting the load and unload areas and the ride. They again cited space limitations especially where ramps are integrated into the ride and folded out of the way when the ride is in use.

*Response.* An exception from the requirement for handrails is added in the final rule. Similar to exception 2, this exception is limited to circumstances where compliance with the handrail requirement is structurally or operationally infeasible.

*Comment.* The proposed rule did not include a provision permitting the use of a limited-use/limited-application elevator or a platform lift as a part of the accessible route in providing access to load and unload areas. The American Institute of Architects (AIA) and others in the amusement industry recommended their use in connecting these areas, especially in connecting elevated load and unload areas and those that cross tracks.

*Response.* An exception is provided in the final rule permitting the use of limited-use/limited-application elevators and platform lifts complying with ADAAG 4.11. The Board has included this option in the final rule to address some of the unique designs and elevated loading areas used within an amusement park. Where platform lifts are used, they must comply with ADAAG 4.11. Future revisions to ADAAG will include technical provisions for limited-use/limited-application elevators. At that time, appropriate provisions will be referenced for these elevators. Currently available design and safety standards should be applied in the interim.

*Comment.* Some commenters questioned whether moving turnstiles and walkways can serve as part of an accessible route connecting amusement rides.

*Response.* The Board has not specifically addressed moving turnstiles and walkways, since they are always capable of stopping or slowing to accommodate guests needing additional time. At this time there is not sufficient information to suggest a consistent safe speed for use for all persons with disabilities. Some individuals will be able to maneuver within the speed and time provided on the moving walkway or turnstile, while others will need additional time. Operators may need to

adjust the speed accordingly to reasonably accommodate guests with disabilities.

*Section 15.1.5 Load and Unload Areas*

This section requires load and unload areas serving amusement rides required to comply with 15.1 to provide a maneuvering space complying with ADAAG 4.2.3. The maneuvering space must have a slope not steeper than 1:48. The maneuvering space is permitted to overlap the accessible route and the required clear floor spaces.

No substantive comment was received and no changes have been made for the final rule.

*Section 15.1.6 Signage*

This section requires signage to be provided at the entrance of the queue or waiting line for each amusement ride to identify the type of access provided (*e.g.*, wheelchair access or transfer access). Where an accessible unload area also serves as the accessible load area, signage must be provided at the entrance to the queue or waiting line indicating the location of the accessible load and unload area. This is important to avoid unnecessary backtracking when patrons begin the process of waiting in line for a particular ride. No substantiative comments were received and no changes have been made to this provision in the final rule.

*Section 15.1.7 Amusement Rides With Wheelchair Spaces*

This section contains technical provisions for amusement rides with wheelchair spaces.

*Comment.* Several amusement ride designers and manufacturers raised concerns about technical provisions for wheelchair spaces on amusement rides. Most commenters believed that the space required was too large and boxy, and would significantly limit the number of amusement rides that could incorporate such a space. Some recommended that knee and toe clearances be incorporated into the space. In general, designers and operators requested more flexibility with wheelchair spaces on amusement rides.

*Response.* The Board has significantly modified the requirements for wheelchair spaces on amusement rides. The final rule includes changes which address the commenters concerns, while still requiring a minimum space that would serve most mobility devices on an amusement ride. The Board recommends that where possible, designers and manufacturers exceed the minimum space. Providing additional space will greatly enhance the ease in loading and unloading and accommodate a greater variety of mobility devices.

*Section 15.1.7.1 Floor and Ground Surface*

This section contains technical provisions for floor or ground surface of wheelchair spaces.

*Comment.* The proposed rule required wheelchair spaces to comply with several provisions of ADAAG 4.5 (4.5.1, 4.5.3, 4.5.4). Commenters expressed some confusion over these references and sought clarification.

*Response.* Rather than referencing ADAAG 4.5, the final rule incorporates these provisions into 15.1.7.1 for clarity. Other editorial changes are also made within this section.

*Section 15.1.7.1.1 Slope*

This section requires the floor or ground surface of wheelchair spaces to have a maximum slope of 1:48 when in the load and unload position and to be firm and stable.

*Comment.* Commenters questioned the appropriateness of requiring the clear space to be level when the amusement ride is in motion.

*Response.* The section is modified to clarify that the maximum 1:48 slope is only required when the amusement ride is in the load and unload position.

*Section 15.1.7.1.2 Gaps*

This section requires floors of amusement rides with wheelchair spaces and floors of load and unload areas to be coordinated so that when the amusement rides are at rest in the load and unload position, the vertical difference between the floors must be within plus or minus 5/8 inches and the horizontal gap should be no greater than 3 inches under normal passenger load conditions. An exception permits that where it is not operationally or structurally feasible to meet the horizontal or vertical difference requirements, ramps, bridge plates, or similar devices complying with the applicable requirements of 36 CFR 1192.83(c) (the Board's vehicle accessibility guidelines) must be provided.

*Comment.* No substantive comment was received on this section. Several representatives from the amusement industry, however, recommended that the Board reference an ASTM Standard Practice for the Design and Manufacture of Amusement Rides and Devices where ramps, bridge plates, lifts, or similar devices are used.

*Response.* The Board carefully examined the suggested ASTM Standard Practice and determined that it was designed as a safety standard rather than a standard that provides guidance on the minimum access requirements for ramps, bridge plates, lifts, and similar devices. Operators and manufacturers are not precluded from also following the standards in the ASTM Standard Practice for the operation of these elements. The applicable requirements of 36 CFR 1192.83(c) (ADA Accessibility Guidelines for Transportation Vehicles—Light Rail Vehicles and Systems—Mobility Aid Accessibility) are available on the Board's Web site at *www.access-board.gov/transit/html/vguide.htm#LRVM.*

*Section 15.1.7.2 Clearances*

This section requires clearances for wheelchair spaces to comply with 15.1.7.2. Three new exceptions are added. Exception 1 permits securement devices, where provided, to overlap the required clearances of the wheelchair space. Exception 2 permits the wheelchair space to be mechanically or manually repositioned. Exception 3 permits departure from the requirements of ADAAG 4.4.2 (Head Room) for the wheelchair space.

*Comment.* The proposed rule did not specifically address securement devices in wheelchair spaces. Commenters questioned whether securement devices could be located within the minimum clear space requirements for wheelchair spaces on amusement rides. They noted that while the proposed rule did not specifically address or require these devices, many operators have provided them where wheelchair spaces are provided on amusement rides.

*Response.* The final rule adds an exception to 15.1.7.2 to permit securement devices to overlap required clearances for wheelchair spaces on amusement rides. However, the final rule does not require securement devices. The decision about whether securement devices are needed is left up to the designer or manufacturer. Where provided, these devices may overlap the required clearances for wheelchair spaces.

*Comment.* As previously discussed, the Board received a significant number of comments from representatives in the amusement industry on the need for more flexibility. Several operators of large parks demonstrated ways that wheelchair spaces were provided on rides through the use of a turntable. This permits the space to be orientated for a forward approach and later turned to be in line with the direction of the motion of the amusement ride. Commenters did not consider repositioning to be an option under the proposed rule.

*Response.* Exception 2 has been added to the final rule and permits the wheelchair space on an amusement ride to be either manually or mechanically repositioned.

*Comment.* A few amusement park designers raised concern about the head clearance requirements of ADAAG 4.4 (Protruding Objects) for the wheelchair space located on an amusement ride. Amusement rides are often designed to move through confined spaces in order to enhance the amusement experience. Since most of these rides are designed for seated patrons, designers requested exemption from this requirement.

*Response.* Exception 3 is added in the final rule and exempts wheelchair spaces on rides from ADAAG 4.4.2 (Head Room). This exception applies to circulation space and clear space requirements on the ride. It does not apply to circulation areas and accessible routes in the queue line or the load and unload areas.

*Section 15.1.7.2.1 Width and Length*

This section requires wheelchair spaces to have a width of 30 inches minimum and a length of 48 inches minimum measured 9 inches minimum above the ground or floor surface.

*Comment.* The proposed rule required the wheelchair space to be a minimum of 36 inches in width. This width was based on the minimum 30 inch width needed for a stationary wheelchair with the additional 6 inches necessary for repositioning in confined spaces which allows space for the front casters of a wheelchair to turn and move when backing up. Designers expressed significant concern over the 36 minimum width and questioned why it was necessary where the space is reached in a forward direction. They further cited designs where the space is manually or mechanically repositioned and therefore should not require further maneuvering. Some commenters also suggested that the depth of the clear space could be 48 inches in all cases.

*Response.* The minimum width of the wheelchair space is reduced to 30 inches in the final rule. While the Board has decreased the minimum width, it recommends that designers and manufacturers exceed the minimum where possible to allow for increased maneuvering space.

*Section 15.1.7.2.2 Wheelchair Spaces—Side Entry*

This section requires that where the wheelchair space can be entered only from the side, the ride must be designed to permit sufficient maneuvering space for individuals using a wheelchair or mobility device to enter and exit the ride.

*Comment.* A few commenters questioned what the minimum space requirements would be for a ride entered from the side. They questioned whether a 32 inch side opening leading to a 30 inch wide by 48 inch long space would be sufficient.

*Response.* Section 15.1.7.2.2 is added to address rides with side entries. A center opening of 32 inches combined with a minimum space of 30 inches wide and 48 inches long is not adequate space for maneuvering. Designers must consider the position of the opening in relation to the minimum space. In some cases, additional clear space and larger openings will be necessary to allow for maneuvering a wheelchair on the ride. An appendix note is included to provide further guidance.

*Section 15.1.7.2.3 Protrusions in Wheelchair Space*

This section permits protrusions in the wheelchair spaces on amusement rides. Objects are permitted to protrude a distance of 6 inches maximum along the front of the wheelchair space where located 9 inches minimum and 27 inches maximum above the wheelchair space. Objects are also permitted to protrude a distance of 25 inches maximum along the front of the wheelchair space where located more than 27 inches above the wheelchair space.

*Comment.* As previously noted, amusement ride designers and operators commented that the wheelchair space clearances in the proposed rule were too restrictive and did not permit knee and toe clearances. They suggested that the clearances could be reduced without compromising the minimum space requirements.

*Response.* The final rule permits protrusions in the wheelchair space on amusement rides.

*Section 15.1.7.3 Openings*

This section requires that where openings are provided to access wheelchair spaces on amusement rides, the entry must provide a 32 inch minimum clear opening.

*Comment.* The proposed rule did not specify a minimum opening space where wheelchair spaces are provided on amusement rides. Commenters requested guidance on this dimension.

*Response.* A provision is added in the final rule to address the minimum width of openings where wheelchair spaces are provided on an amusement ride. This is consistent with minimum width requirements for doors and other passageways that are part of an accessible route.

*Section 15.1.7.4 Approach*

This section requires one side of the wheelchair space to adjoin an accessible route.

No substantive comment was received on this provision.

*Section 15.1.7.5 Companion Seats*

This section requires that where the interior of an amusement ride is greater than 53 inches in width, seating is provided for more than one rider, and the wheelchair is not required to be centered within the amusement ride, a companion seat must be provided for each wheelchair space.

*Comment.* The proposed rule required companion seating where seating for more than one rider is provided. Ride manufacturers commented that providing companion seating may not be possible on rides where the center of gravity is critical to its operation. They noted that providing space for an individual seated in a wheelchair and a seated companion may increase and change the weight distribution on a ride. They supported a provision with limits that are linked to the minimum width of the ride, whether or not seating is provided for more than one rider, and whether the wheelchair space is centered on the ride.

*Response.* This section is modified in the final rule to address the concerns raised. Consistent with the proposed rule, companion seating is required only where seating is provided for more than one rider. Additionally, companion seating is required only where the interior of an amusement ride is greater than 53 inches in width and the wheelchair is not required to be centered within the amusement ride.

*Section 15.1.7.5.1 Shoulder-to-Shoulder Seating*

This section requires that where an amusement ride provides shoulder-to-shoulder seating, companion seats must be shoulder-to-shoulder with the adjacent wheelchair space.

*Comment.* Commenters suggested that in some circumstances, shoulder-to-shoulder seating may not be possible. They cited examples of water rides where the rider's center of gravity is critical. Adding two riders side by side can alter the balance of the ride.

*Response.* An exception is added in the final rule that shoulder-to-shoulder companion seating is required only to the maximum extent feasible, where compliance is not operationally or structurally feasible.

*Section 15.1.8 Amusement Ride Seats Designed for Transfer*

This section requires that amusement rides with ride seats designed for transfer must comply with 15.1.8 when positioned for loading and unloading.

*Comment.* Significant comment was received on the technical provisions addressing transfer seats. Some interpreted the proposed rule to require a ''special seat'' in addition to other ride seats. Others believed that the technical provisions did not provide sufficient flexibility, especially given the diversity of rides and ride seats.

*Response.* The final rule requires that each ride provide: (1) A wheelchair space, or (2) an amusement ride seat designed for transfer, or (3) a system to facilitate the transfer of a person in a wheelchair from the load or unload area to a ride seat. Where ride seats are designed for transfer, this section applies. For the most part, the technical provisions for space and other features are applied to both the ride seat and the transfer device since both elements are designed for an individual to transfer from their wheelchair or mobility device to an element. A ride seat designed for transfer is usually a seat that is a permanent part of the ride itself.

*Section 15.1.8.1 Clear Floor Space*

This section requires clear floor space complying with ADAAG 4.2.4 to be provided in the load and unload area adjacent to amusement ride seats designed for transfer.

*Comment.* The proposed rule required the clear floor space to comply with ADAAG 4.2.4 and be positioned with the longer dimension parallel to the unobstructed side of the transfer seat. The space was also required to be located within 3 inches maximum of the transfer seat. Commenters supported the basic clear floor space requirement of 30 inches by 48 inches. Several commenters however, believed that the requirements for the orientation of the clear space were too stringent for two reasons. First, the orientation required in the proposed rule was potentially limited to a side transfer. Many individuals choose to transfer using a diagonal or front approach. Second, they were concerned about the variety of amusement rides and load and unload areas. They recommended that the orientation of the clear space with respect to its location to the ride seat be left up to the designer.

*Response.* The final rule requires a 30 inch wide by 48 inch deep clear space to be adjacent to the ride seat designed for transfer. The position of the clear space is not specified in the final rule. Designers will decide its location based on what is best suited for transfer on a particular ride.

*Section 15.1.8.2 Transfer Height*

This section requires the height of ride transfer seats to be located 14 inches minimum to 24 inches maximum measured above the load and unload surface.

*Comment.* The proposed rule required the transfer seat to be between 17 and 19 inches based on other elements within ADAAG where individuals using wheelchairs and other mobility devices are expected to transfer. Commenters requested the range to be greater.

*Response.* The final rule provides a greater range in the height of the ride seat designed for transfer. Providing a greater range in this height should reduce reliance on transfer devices and have the effect of decreasing the number of transfers to get from one's wheelchair or mobility device to a ride seat. The Board recognizes that amusement rides have unique designs. The increase in the transfer height range is limited to amusement rides because of their unique designs. The goal is to provide designs that afford the least amount of transfers for the least amount of distance. The Board recognizes that providing a greater range in the transfer height may make transfers more difficult for some people with disabilities. Based on this concern, and the fact that the transfer height for amusement rides is new, the Board will closely monitor how well the range provides access to amusement rides. Where possible, designers are encouraged to locate the transfer seat between 17 inches and 19 inches above the load and unload surface.

*Section 15.1.8.3 Transfer Entry*

This section requires that where openings are provided to transfer to amusement ride seats, the space must be designed to provide clearance for transfer from a wheelchair or other mobility device to the amusement ride seat.

*Comment.* The proposed rule required the transfer entry on the amusement ride to be a minimum of 36 inches wide. The entry was also required to be positioned parallel and adjacent to the longer dimension of the clear floor space. Amusement ride designers and manufacturers commented that the 36 inch width was excessive and believed that few rides, if any, could comply with this dimension. They further explained that openings are generally kept to a minimum since the sides of the ride often serve as a part of the restraint or securement system for the ride.

*Response.* Due to the large variance of amusement rides and the potential interference with the securement system, the final rule requires a space to be designed to provide clearance for transfer from a wheelchair or mobility device to the amusement ride seat. Specific dimensions for the opening are not provided in the final rule.

*Section 15.1.8.4 Wheelchair Storage Space*

This section requires wheelchair storage spaces complying with ADAAG 4.2.4 to be provided in or adjacent to unload areas for each required amusement ride seat designed for transfer. The space must not overlap any required means of egress or accessible route.

*Comment.* Some commenters interpreted the provision to require some type of constructed storage space.

*Response.* Clear space is needed in the load and unload areas for individuals to leave their wheelchairs when they transfer onto amusement rides. ADAAG 4.2.4 specifies a minimum 30 inch by 48 inch space for a stationary wheelchair. For safety reasons, the space must not overlap any required means of egress or accessible route. This provision does not require a constructed element for storage, only a space. Most current designs used for load and unload areas will include sufficient space to comply with this provision.

*Section 15.1.9 Transfer Devices for Use With Amusement Rides*

This section requires that transfer devices for use with amusement rides must comply with 15.1.9 when positioned for loading and unloading.

*Comment.* As previously discussed, significant comment was received on the technical provisions addressing transfer seats. Some interpreted the proposed rule to require a ''special seat'' in addition to other ride seats. Others believed that the technical provisions did not provide sufficient flexibility, especially given the diversity of rides and ride seats.

*Response.* The final rule requires that each ride provide: (1) A wheelchair space, or (2) an amusement ride seat designed for transfer, or (3) a system to facilitate transfer of a person in a wheelchair from the load or unload area to a ride seat. This section applies where transfer devices are used to provide access to an amusement ride seat. A transfer device can be provided as an integral part of the ride, or as a permanent or temporary part of the facility. Significant flexibility is provided for ride designers or park

operators to develop these transfer devices. Transfer devices may include lifts, ramps, transfer platforms and steps, or other similar systems and do not require modification to manufactured rides. Information is provided in the appendix to assist operators in selecting from different types of transfer devices.

*Section 15.1.9.1 Clear Floor Space*

This section requires clear floor space complying with ADAAG 4.2.4 to be provided in the load and unload area adjacent to transfer devices.

Consistent with the clear space requirement for ride seats designed for transfer, the position of the clear space adjacent to the transfer devices is not specified in the final rule. Designers will decide its location based on what is best suited for transfer on a particular transfer device.

*Section 15.1.9.2 Transfer Height*

This section requires the height of transfer device seats to be located 14 inches minimum to 24 inches maximum measured above the load and unload surface.

The Board has applied the same range established for amusement ride seats designed for transfer to transfer devices. As previously stated, the goal is to provide designs that afford the least amount of transfers for the least amount of distance.

Where possible, designers are encouraged to locate the transfer device between 17 inches and 19 inches above the load and unload surface. Further guidance related to maximum heights for vertical movements when transferring within a transfer device is provided in the appendix.

*Section 15.1.9.3 Wheelchair Storage Space*

This section requires wheelchair storage spaces complying with ADAAG 4.2.4 to be provided in or adjacent to unload areas for each required transfer device and must not overlap any required means of egress or accessible route.

*Comment.* Some commenters interpreted the provision to require some type of constructed storage space.

*Response.* Clear space is needed in the load and unload areas for individuals to leave their wheelchairs when they transfer onto transfer devices. ADAAG 4.2.4 specifies a minimum 30 inch by 48 inch space for a stationary wheelchair. For safety reasons, the space must not overlap any required means of egress or accessible route. This provision does not require a constructed element for storage, only a space. Most current designs used for load and unload areas will include sufficient space to comply with this provision.

*Other Issues*

*Accessible Routes in Temporary Places of Amusement*

*Comment.* The proposed rule requested comment on providing accessible routes on sites used for fairs, carnivals, and other temporary places of amusement. Usually a site such as a field or parking lot may be used for a short period of time for temporary places of amusement.

*Response.* The Board received few comments on this issue. The final rule does not include any provisions for accessible routes in temporary places of amusement. The Department of Justice has the authority to address this issue. Given the diversity of sites and complexity of agreements involved when using sites on a temporary basis, one set of guidelines is not practical. State and local government entities covered by title II may not, in determining the site or location of a facility, make selections that have the effect of excluding individuals with disabilities (28 CFR 35.130(b)(4)). Where a site is altered by installing some type of surface, that surface must be stable, firm, and slip resistant and meet other requirements in ADAAG 4.3 for the accessible route. Temporary structures are covered by ADAAG 4.1.1(4) and are required to comply with ADAAG. As with other alterations, ''technical infeasibility'' permits departure from technical provisions where existing physical or site constraints prohibit modification or addition of elements, spaces, or features.

*Section 15.2 Boating Facilities*

*Section 3.5 Definitions*

This section defines five terms for boating facilities.

A ''boat launch ramp'' is a sloped surface designed for launching and retrieving trailered boats and other water craft to and from a body of water.

A ''boat slip'' is that portion of a pier, main pier, finger pier, or float where a boat is moored for the purpose of berthing, embarking, or disembarking.

A ''boarding pier'' is a portion of a pier where a boat is temporarily secured for purposes of embarking and disembarking.

A ''gangway'' is a variable-sloped pedestrian walkway linking a fixed structure or land with a floating structure. This definition does not apply to gangways which connect to vessels.

A ''transition plate'' is a sloping pedestrian walking surface located at the end(s) of a gangway.

*Comment.* The proposed rule included definitions for boat launch ramp, boat slip, design high point, and gangway. Commenters recommended rewording these definitions. Commenters also recommended that additional definitions be added, such as handrail, landings, pier, main pier, finger pier, boarding pier, fixed and floating piers, mooring space, transient slips, and transition plate.

*Response.* The final rule provides five definitions. Definitions for boat launch ramp, boat slip, and gangway, have been retained but have been changed to improve clarity. Definitions for boarding pier and transition plate have been added, and the definition for design high point has been removed. Additional terms suggested by commenters were not added since they were not used in the technical or scoping provisions of the boating section.

*Section 15.2.1 General*

This section requires newly designed or newly constructed and altered boating facilities to comply with 15.2.

*Comment.* Some commenters did not want the rule to apply to each boating facility. They noted that designers and facility managers needed flexibility to provide reasonable accommodations in an environment which may contain extreme physical conditions. Several commenters requested that where two of more boating facilities are located within 10 miles of each other, only one facility should be accessible. Other commenters assumed that all existing facilities would have to immediately conform to the final rule.

*Response.* These guidelines apply to each newly designed or newly constructed boating facilities. Altered facilities must conform to the guidelines to the degree required by ADAAG 4.1.6. Where an existing facility is not being altered, the guidelines do not require that alterations be performed.

*Comment.* Commenters requested clarification on the term ''recreational boating facility.''

*Response.* This section primarily applies to piers and docks typically found at marinas where recreational boats are moored for embarking and disembarking occupants, but will apply in other non-marina settings. Where a vessel is primarily used for recreation, generally piers and docks designed and constructed to provide mooring and other services for such vessels would be covered by this section. Recreational boats range in size from small canoes to

large sailboats and power boats. The final rule is not intended to cover piers used solely by ferries or other commercial vessels, such as freighters, ocean supply vessels, and commercial fishing vessels.

Boating facilities covered by this final rule vary in size. Some contain as few as one boat slip (for example, a small campground with a short non-demarcated pier) and others are large enough to contain several thousand boat slips (for example, a large marina with many boat basins). Some have piers and boat launch ramps, while others only have piers. A boating facility may only contain a single launch ramp with no boarding pier or may contain multiple launch ramps with multiple boarding piers. In some cases, a site (such as a State park with a large lake) may contain more than one boating facility. In other cases, several boating facilities may be located in the same waterfront area, each operated by different operators.

*Section 15.2.2 Accessible Route*

This section requires that accessible routes, including gangways that are part of an accessible route, comply with ADAAG 4.3. ADAAG 4.1.2(2) requires that at least one accessible route connect accessible buildings, facilities, elements, and spaces on the same site. Therefore, an accessible route must connect accessible boat slips with other accessible elements on the same site. Eight exceptions, discussed below, have been added which modify the accessible route requirements as they relate to connecting floating piers.

No exceptions have been provided for accessing fixed piers. Therefore, accessible routes serving fixed piers must meet all the requirements of ADAAG 4.3.

*Exception 1 Alterations to Existing Gangways*

Exception 1 permits the replacement and alteration of existing gangways or series of gangways without triggering an increase in the length of the gangways, unless required by ADAAG 4.1.6(2).

*Comment.* Commenters noted that for maintenance or safety reasons, gangways are sometimes replaced or altered without any other changes being made to the floating piers and land based features located at the ends of the gangways. Under ADAAG's requirements for alterations, a replaced gangway would have to meet the requirements of section 15.2.2. The primary difficulty typically involves meeting slope requirements, rather then meeting handrail and transition plate requirements. In many cases, compliance with section 15.2.2 would require longer gangways to be installed. To install a longer gangway, changes to adjacent structures may be needed and such changes could also lead to reductions in the number of boat slips available. Available water sheet may also prevent lengthening of the gangways in an existing boating facility.

*Response.* The final rule includes an exception that does not require an increase in the length of the gangway, where gangways are replaced or altered. However, under ADAAG 4.1.6(2), alterations to areas containing primary functions may require existing gangways and adjacent structures to be brought into conformance with section 15.2.2. ADAAG 4.1.6(2) provides that, when an area containing a primary function is altered, an accessible path of travel must be provided to the altered area unless the cost and scope of the alterations to provide an accessible path of travel is disproportionate to the overall alterations as determined under criteria established by the Department of Justice. The Department of Justice regulations for title III of the ADA deem alterations to provide an accessible path of travel to be disproportionate when the cost exceeds 20 percent of the cost of the overall alterations.[6]

*Exceptions 2 and 3 Maximum Gangway Rise and Slope*

Exception 2 permits gangways or series of gangways to exceed the maximum rise specified in ADAAG 4.8.2. Exception 3 permits gangways to exceed the maximum slope specified in ADAAG 4.8.2, where the total length of the gangways serving as part of a required accessible route is at least 80 feet.

*Comment.* One of the most difficult issues relating to accessibility in floating boating facilities is gangway slopes. The proposed rule permitted gangway slopes to exceed a maximum slope of 1:12 at such times as when the distance between the design high point and water level exceeded a specific value depending on the size of the pier. In addition, the proposed rule exempted gangways from the maximum rise in ADAAG 4.8.2.

Over 60 organizations and individuals responded to the above proposals. Most indicated that they did not support the provisions. The comments raised concerns about how to calculate the pier square footage and what was considered a ''pier.'' Some asked whether levees, boardwalks, or retaining walls are fixed piers and how to measure the square footage. Others asked about private operators using floating piers and leasing space at a city pier. They questioned whether the square footage of the city pier is included in the calculations for determining access to the privately owned floating pier. One commenter noted that facility size determinations based on square footage may tend to drive entities to reduce pier widths which could compromise safety and stability.

A few commenters questioned how the design high point was selected. They questioned whether this point was the 100 year flood line, mean high tide, extreme high tide, ordinary high water, or high pool water line. One commenter noted that what is a safe and practical upper limit is not constant and easily determined.

Some commenters were concerned that facilities located where water level fluctuations are over 40 feet, would end up with no access or only limited access. A number of commenters suggested that a maximum gangway slope be established for most conditions, if not all conditions. Recommended slope maximums ranged from 5 percent to 15 percent.

At least 10 commenters noted that the requirements should ideally be site specific because of the varying logistical problems and differing geographic conditions at locations where water level fluctuations range from a few inches to over 100 feet. These commenters said that the table in the proposed rule would create hardships for existing facilities where space limitations are present, by requiring reductions in boat slip counts and by discouraging operators from upgrading their facilities. A number of commenters recommended that accessible gangways only be required where they serve 100 or more boat slips.

Using recommendations made by a number of commenters and combined with an effort to reduce the complexity of the final rule, the Board published a summary of a draft final rule for comment. In this draft, the Board indicated that the slope of a gangway would be permitted to exceed the maximum slope of 1:12 where the linear feet of mooring space along the perimeter of the piers at a facility was less than 1,000 feet (approximately 20–30 slips) and the water fluctuation was more than one foot. The provision, which was a general exception from the maximum slope requirement, was intended to provide regulatory relief for smaller boating facilities where an extensive gangway system may be cost prohibitive. Linear feet of mooring space was used instead of the square footage

[6] *See* 28 CFR 36.403(f)(1) (*http://www.usdoj.gov/crt/ada/reg3a.html*).

of a facility to more effectively measure the size of usable space where boats can dock rather than other spaces at a boating facility.

The draft final rule also required that where the linear feet of mooring spaces along the perimeter of the piers at a facility was less than 3,000 feet (approximately 50–70 slips) and the water fluctuation was more than 5 feet, the maximum gangway slope would be permitted to be 1:8 maximum. This exception allowed for a steeper slope than generally provided in ADAAG.

Lastly, the draft final rule stated that where the water fluctuation was more than 10 feet, gangways would be permitted to exceed the maximum slope of 1:12. Providing complying gangway slopes where the water fluctuation exceeds 10 feet requires extensive gangway systems and supporting facilities. It was noted in the draft final rule that although the gangway slope was permitted to be any slope, the gangway was not allowed to consist of stairs, since stairs are not permitted to be part of an accessible route.

During two public information meetings and from written comment received on the summary of the draft final rule, commenters generally supported simplifying the rule. Some expressed concerns about allowing a 1:8 slope on gangways, and others objected to using linear feet to determine the size of smaller facilities. A few commenters noted that the maximum feasible length of a gangway is between 60 and 70 feet. These commenters indicated that providing longer gangways, or providing two or more shorter gangways as part of a gangway and ramp system, dramatically increased the costs, complexity, and maintenance of the structure. Some commenters pointed out that because gangways often depart from a landside connection which is positioned at least 3 to 4 feet above high water, a 120-foot gangway provided to handle a 10-foot water level change actually needs to be at least 156 to 168 feet long (or a series of gangways and ramps with the same aggregate length).

*Response.* It is recognized that many factors which vary throughout the country add to the complications of providing larger gangway and ramp systems to handle greater changes in water fluctuation and elevation. Factors include water level changes, distance of gangway departure points above high water marks, available water sheet to construct within, location of shipping channels into which piers and gangways cannot project, wind load on floating structures as they get bigger, types of mooring systems, dead and live loads of gangways and the size of floating facilities to support them, currents, boat wakes, and the ability to remove floating structures when bodies of water freeze over. In the proposed rule, the Board attempted to define the level of access based on the size of a facility (*i.e.*, pier square footage). Comments noted that many other factors besides facility size, play a role in determining what is feasible. Because factors vary throughout the country and could vary between adjacent sites and adjacent facilities, selecting one factor or a list of factors to measure for determining appropriate gangway slope is not feasible.

In an effort to provide a simplified rule and establish a starting point for determining gangway access, the final rule focuses on a maximum feasible gangway length. In response to the draft final rule, a recommendation was developed by the California Department of Boating and Waterways, Oregon State Marine Board, Clean Harbor Action, and Revitalize Our Waterways (and supported by over 20 other commenters). This recommendation showed that it would be feasible in new construction to provide up to 80-foot gangways. From this comment (which also contained recommendations for different gangway slopes for varying changes in elevation), the Board developed the final rule which is based only on gangway length. Exception 3 requires that an entity either (1) provide a gangway (or series of gangways) at least 80 feet in total length, or (2) provide a gangway (or series of gangways) which does not exceed a maximum slope of 1:12. The final rule also retains the exception permitting gangways to be any length without a landing. As these exceptions only apply to gangways, ramps constructed on floating piers and ramps providing access to landside connections of gangways are not permitted to use these exceptions. Since the final rule does not use water level change as a mechanism for determining gangway accessibility, the definition for design high point was removed. The appendix includes the following two examples.

*Example 1.* Boat slips which are required to be accessible are provided at a floating pier. The vertical distance an accessible route must travel to the pier when the water is at its lowest level is 6 feet, although the water level only fluctuates 3 feet. To comply with exceptions 2 and 3, at least one design solution would provide a gangway at least 72.25 feet long which ensures the slope does not exceed 1:12.

*Example 2.* A gangway is provided to a floating pier which is required to be on an accessible route. The vertical distance is 10 feet between the elevation where the gangway departs the landside connection and the elevation of the pier surface at the lowest water level. Exceptions 2 and 3, which modify 4.8.2, permit the gangway to be at least 80 feet long. Another design solution would be to have two 40-foot continuous gangways joined together at a float, where the float (as the water level falls) will stop dropping at an elevation five feet below the landside connection.

*Comment.* A number of commenters expressed concern that steeper gangway slopes and the absence of level landings every 30 feet created barriers for persons with disabilities. Some commenters also noted that State and local governments should be held to a higher standard than private entities.

*Response.* As water levels rise and fall, gangway slopes also rise and fall. In some areas, there will be times that a gangway slope is less than 1:20 and at other times it will be greater than 1:12. The Board has attempted to balance the needs of persons with disabilities with the cost of providing access in an environment that can vary dramatically throughout the country. The Board also decided against providing different requirements for boating facilities operated by State and local government or private entities. As this is the first time Federal accessibility guidelines have been developed to address these types of facilities, the Board plans to closely monitor how well the guidelines provide access and what new technologies are developed to provide equivalent or better access.

*Comment.* A few commenters representing passenger vessel owners were concerned that the gangway provisions would also apply to gangways serving passenger vessels.

*Response.* The gangway provisions of this rulemaking only apply to gangways which access floating piers from the land or fixed structures. The Board is working on a separate rulemaking which will address passenger vessel access. A statement has been added to the gangway definition indicating that the definition does not apply to gangways which connect to vessels.

*Exception 4 Small Boating Facilities With Less Than 25 Boat Slips*

Exception 4 permits gangways to exceed the maximum slope specified in ADAAG 4.8.2, where a facility contains less than 25 boat slips and where the total length of the gangway, or series of gangways, serving as part of a required accessible route is at least 30 feet.

*Comment.* Commenters were concerned about how the gangway requirements would impact smaller facilities.

*Response.* The proposed rule and the draft final rule lessened the impact on

smaller boating facilities based on pier square footage or linear feet. Most commenters recommended using number of boat slips. Since the final rule does not address piers used by transportation vessels covered by ADAAG 10.5, which are more likely to contain a limited number of very large slips, basing the exception on boat slip numbers is appropriate.

*Exception 5 Transition Plates*

Exception 5 permits transition plates to be located at the ends of gangways instead of the landings specified by ADAAG 4.8.4.

*Comment.* The proposed rule permitted gangways to have transition plates at the top and bottom. Comments ranged from noting the need for a definition, setting out maximum lengths and slopes, and having them meet gangway requirements.

*Response.* In the final rule, a definition for transition plate has been added to ADAAG 3.5. Where transition plates are part of an accessible route, the transition plates must comply with ADAAG 4.3, unless one of the exceptions in 15.2.2 applies. For example, ADAAG 4.3.7 and 4.8.2 would prohibit transition plates from having a slope greater than 1:12. Where the requirements of ADAAG 4.8 apply (because the slope is greater than 1:20), the transition plates must have landings complying with ADAAG 4.8.4 at the non-gangway end.

*Exception 6 Handrail Extensions*

Exception 6 does not require handrail extensions, where gangways and transition plates connect and both are required to have handrails. In addition, the exception provides that where handrail extensions are provided on gangways or transition plates, the extensions are not required to be parallel with the ground or floor surface.

*Comment.* The proposed rule did not require handrail extensions on gangways or landings where they connect to transition plates and did not require handrail extensions at transitions plates. Although some commenters supported the exception, others noted that handrail extensions were needed, particularly on gangways when the transition plate had no handrail. Commenters also noted the difficulty in complying with ADAAG 4.8.5, which requires handrail extensions to be parallel with the ground or floor surface. As gangway slopes change, handrails extensions at the end of gangways and transition plates are no longer parallel. Other commenters requested that transition plates always have handrails and questioned whether gangway handrails had to be connected or continuous with landing handrails.

*Response.* The exception has been rewritten to address most of the concerns raised. The determination of whether a transition plate is required to have a handrail will be triggered by the requirements of ADAAG 4.3.7 and 4.8.5. Regarding connections to landing handrails, gangways required to comply with ADAAG 4.8.5 are required to have continuous handrails on both sides. When gangway handrail extensions are required, subject to exception 5 exclusions, the extensions would overhang landings and transition plates 12 inches minimum. ADAAG contains no requirement that these extensions connect handrails which might be provided on landings or guardrails which also may be provided.

*Exception 7 Cross Slope*

Exception 7 permits the cross slope of gangways, transition plates, and floating piers that are part of an accessible route to be 2 percent maximum measured in the static position.

*Comment.* Commenters representing State recreational boating agencies expressed concern about constructing floating piers and gangways which must conform to a 2 percent maximum cross slope 100 percent of the time in all weather and water conditions.

*Response.* Exception 7 was added to address this concern by specifying that the maximum cross slope is measured in the static condition. Gangways and piers which are part of an accessible route are expected to be designed and constructed to meet the 2 percent maximum cross slope. Once they are placed in the water, measurements absent live loads are to be made from a static condition without motion or wave action. Where floating piers are grounded out due to low water conditions, the slope requirements would not apply to such floating piers and associated gangways and transition plates.

*Exception 8 Limited-Use/Limited-Application Elevators and Platform Lifts*

Exception 8 permits limited-use/limited-application elevators or platform lifts complying with ADAAG 4.11 to be used in lieu of gangways complying with ADAAG 4.3.

*Comment.* One commenter pointed out that other methods, such as platform lifts and elevators should be used to provide access to a floating pier. Another commenter noted that a product, similar to a platform lift, had been developed for accessing floating piers. They believed that the final rule should encourage technological developments in this area.

*Response.* ADAAG 4.3 and 15.2 allow accessible routes to consist of elevators, ramps, and (when accessing floating piers) gangways. However, under ADAAG 4.1.3(5), Exception 4, the use of a platform lift to access a pier (floating or fixed) would be prohibited in new construction. In alterations to existing facilities, this restriction does not apply. (*See* ADAAG 4.1.6(3)(g) regarding platform lift usage in alterations.) Exception 8 was added to allow more flexibility in providing access to floating piers and to encourage the development of other methods of access using mechanical means. This exception modifies the requirements of ADAAG 4.1.3(5) and allows the use of platform lifts and limited-use/limited-application elevators in new construction as part of an accessible route connecting floating piers.

*Section 15.2.3 Boat Slips: Minimum Number*

This section requires that where boat slips are provided, accessible boat slips complying with section 15.2.5 must be provided in accordance with Table 15.2.3. Boarding piers at boat launch ramps are not counted for this purpose. Where the number of boat slips is not identified, each 40 feet of boat slip edge provided along the perimeter of the pier shall be counted as one boat slip for purposes of this section.

*Comment.* The proposed rule required that where boat slips are provided, at least 3 percent of all boat slips, but not less than one boat slip, be accessible. Comments varied between supporting a range from 1 percent to 4 percent. Some comments recommended that the number of accessible boat slips be the same as the number of required accessible vehicle parking spaces. One commenter recommended that one of each type of slip be accessible. A facility operator noted that at large facilities, a 3 percent scoping provision would require more accessible boat slips than a similar number of vehicle parking spaces. Several commenters questioned whether the need for accessible slips was as high as the need for accessible parking.

*Response.* The Board is not convinced that the scoping for accessible boat slips needs to be the same as the scoping for accessible vehicle parking spaces and is concerned that the proposed 3 percent would require more accessible slips in larger facilities than a similar number of parking spaces. The final rule modifies the scoping by reducing the percentage of accessible boat slips in larger facilities. A table is added to the final

rule to show the required number of accessible boat slips. The table starts with 3 percent and reduces down to 1 percent as the number of boat slips increase. For example, a 100-slip marina would need 3 accessible slips, and a 1,450-slip marina would need 17 accessible slips. Since this is the first time Federal guidelines have addressed the minimum number of accessible boat slips, the Board plans to closely monitor how the numbers meet the needs of individuals with disabilities.

*Comment.* The proposed rule also required that where the number of slips cannot be identified, each 40 feet of mooring space provided along the perimeter of a pier be counted as one boat slip for the purpose of applying this section. Most commenters supported the requirement. A few commenters noted that most recreational boats are less than 40 feet in length and recommended a number less than 40 feet.

*Response.* Although most recreational boats are less than 40 feet, the final rule seeks to increase the likelihood that accessible slips at non-demarcated piers are long enough to accommodate most types of common recreational boats. For this reason, the final rule has retained using 40 feet as the distance for determining the number of slips at piers where slips are not demarcated. (*See* section 15.2.4.1 regarding lengths of boarding piers at launch ramps.) The following two examples are included in the appendix.

*Example 1.* A site contains a new boating facility which consists of a single 60-foot pier. Boats are only moored parallel with the pier on both sides to allow occupants to embark or disembark. Since the number of slips cannot be identified, section 15.2.3 requires each 40 feet of boat slip edge to be counted as one slip for purposes of determining the number of slips available and determines the number required to be accessible. The 120 feet of boat slip edge at the pier would equate with 3 boat slips.

Table 15.2.3 would require 1 slip to be accessible and comply with 15.2.5. Section 15.2.5 (excluding the exceptions within the section) requires a clear pier space 60 inches wide minimum extending the length of the slip. In this example, because the pier is at least 40 feet long, the accessible slip must contain a clear pier space at least 40 feet long which has a minimum width of 60 inches.

*Example 2.* A new boating facility consisting of a single pier 25 feet long and 3 feet wide is being planned for a site. The design intends to allow boats to moor and occupants to embark and disembark on both sides, and at one end. As the number of boat slips cannot be identified, applying section 15.2.3 would translate to 53 feet of boat slip edge at the pier. This equates with two slips. Table 15.2.5 would require 1 slip to be accessible. To comply with 15.2.5 (excluding the exceptions within the section), the width of the pier must be increased to 60 inches. Neither (15.2.3 nor 15.2.5) requires the pier length to be increased to 40 feet.

*Comment.* The proposed rule counted boat launch ramp boarding piers as boat slips for determining the number of accessible slips required at a facility. The proposed rule also required at least one additional accessible boat slip to be provided adjacent to accessible launch ramps, where boarding piers were provided. Some commenters thought that this requirement would cause confusion. A few commenters questioned whether boat slips should be provided on boarding piers because boat slips are rented, leased or purchased, but boarding piers are used in a short-term manner. A number of commenters believed the provision required that launch ramps must have boarding piers.

*Response.* To avoid confusion, the final rule addresses scoping requirements for launch ramp boarding piers separately from boat slips. A definition has been added to ADAAG 3.5 for boarding piers.

*Comment.* Many commenters expressed concern that accessible slips had to be reserved only for persons with disabilities similar to how vehicle parking spaces are reserved.

*Response.* Accessible boat slips are not ''reserved'' for persons with disabilities in the same manner as accessible vehicle parking spaces. Rather, accessible boat slip use is comparable to accessible hotel rooms. The Department of Justice is responsible for addressing operational issues relating to the use of accessible facilities and elements. The Department of Justice currently advises that hotels should hold accessible rooms for persons with disabilities until all other rooms are filled. At that point, accessible rooms can be open for general use on a first come, first serve basis. This information has also been included in the appendix.

*Section 15.2.3.1 Dispersion*

This section requires that accessible boat slips be dispersed throughout the various types provided. It does not require an increase in the minimum number of boat slips required to be accessible.

*Comment.* Commenters expressed concern about how many accessible gangways would be required due to this dispersion requirement. Commenters noted that some facilities have several floating piers, each connected by an individual gangway. If accessible slips must be placed on more than one pier (due to the dispersion requirement), more than one accessible gangway system would be required.

*Response.* This provision does not prohibit accessible boat slips from being grouped at one or more piers, where such grouping does not reduce the number of type of slips that are required to be accessible. In cases where relocation of types of accessible boat slips to one pier is not possible, this dispersion provision will require more than one conforming gangway system.

*Comment.* Commenters requested more information on the different ''types'' of boat slips.

*Response.* Features to be considered in determining types of boat slips include the size of the boat slips, whether there are single berths or double berths, shallow water or deep water, transient, longer-term lease, covered or uncovered, and whether slips are equipped with features such as telephone, water, electricity, and cable connections. Because the term ''boat slip'' is intended to cover any pier area where passengers or occupants embark or disembark, unless classified as a launch ramp boarding pier, other piers not typically thought of as containing ''boat slips'' are covered by this dispersion requirement. Therefore, for example, a fuel pier used on a short term basis may contain boat slips, and this type of slip would be included in determining compliance with section 15.2.3.1. This information has also been included in the appendix.

*Comment.* The proposed rule required that accessible boat slips be located nearest to the amenities provided in the boating facility. Some commenters noted that adding this requirement to the dispersion provision increased the difficultly in providing accessible slips in existing facilities. It also tended to require more accessible gangways even in new construction. Commenters also questioned how to identify an amenity and if it is desirable to be located nearest an amenity. For example, being located near the toilet room might be desirable for one person but not for someone sensitive to noise and odors. Likewise, having an accessible slip located nearest the fuel pier may be beneficial for one person and not desired by others. One commenter noted that at existing facilities, corner slips are already accessible, but may not be closest to amenities.

*Response.* The ''amenities'' section has been removed from the final rule, because the rule intends to allow accessible boat slips to be grouped on one or more piers. In addition, the provision was removed due to comments which questioned whether being closest to an amenity is desirable.

*Section 15.2.4 Boarding Piers at Boat Launch Ramps*

This section requires where boarding piers are provided at boat launch ramps, at least 5 percent, but not less than one, of the boarding piers must comply with 15.2.4 and be served by an accessible route complying with ADAAG 4.3.

Exception 1 permits accessible routes serving floating boarding piers to use the exceptions in section 15.2.2. Exception 2 permits gangways to exceed the maximum slope and rise specified by ADAAG 4.8.2, where the total length of the gangways serving as part of a required accessible route is greater than 30 feet. Lastly, exception 3 indicates that where the accessible route serving a floating boarding pier or skid pier is located within a boat launch ramp, ADAAG 4.8 does not apply to the portion located within the boat launch ramp.

*Comment.* As noted above, some commenters thought that the proposed rule required that an accessible slip or boarding pier had to be provided at boat launch ramps.

*Response.* The proposed rule did not require that accessible boarding piers be provided at every facility with a launch ramp. Where boarding piers are provided, the proposed rule required that at least one accessible boat slip be provided adjacent to the launch ramp to ensure that at least one boarding pier complied with the pier clearance requirements. By using the term ''boat slip'', the Board did not intend to ensure that a rented, leased, or purchased mooring space would be available at the launch ramp, as some commenters concluded.

*Comment.* The proposed rule required that where boat launch ramps are provided with boarding piers, at least one accessible slip be provided adjacent to a boat launch ramp. A few commenters suggested that 50 percent, but not less than one boarding pier, be accessible.

*Response.* The final rule requires 5 percent, but not less than one, of boarding piers to be accessible. Most facilities with launch ramps only have one or two launch ramps. Compliance with this provision would translate to 100 percent or 50 percent access, assuming each launch ramp had its own boarding pier. Since some facilities have more than 20 launch ramps, the provision is consistent with how ADAAG addresses some conditions where multiple features are provided for the same use.

*Comment.* Some commenters were concerned that to serve an accessible floating boarding pier, the accessible route would have to run down the launch ramp and would require the slope of the launch ramp to be 1:12 maximum. Such a slope would dramatically effect the ability to launch and retrieve trailered boats. A few commenters noted that in designs using a string of boarding piers connected together, as water levels decline, the boarding piers end up resting on the launch ramp surface. Therefore, they would match the slope of the launch ramp which is generally steeper than 1:8. In such a design, some piers actually function as gangways for a period of time.

In another design, a stationary boarding pier (also known as a skid pier) rests on the launch ramp surface, but is repositioned as water levels rise and fall. This design also allows the skid pier to be easily removed where the body of water becomes ice bound and deicing equipment is not practical. An example of a fixed boarding pier was provided which showed two levels connected by handrail equipped ramps. During high water, boaters used the upper level while the lower level and the ramp connecting it were covered by water. At low water, the lower level is used.

One commenter noted the value floating boarding piers provide for persons with disabilities when accessing a boat since the pier remains at a set height above the water. A few pointed out that accessible routes serving boarding piers were not required to run down the launch ramp but could be provided alongside the ramp. Another commenter noted that constructing switchback ramps or any other structure within the area near the shoreline was subject to more environmental limitations and was a problem particularly for providing access at existing launch ramps. Several commenters pointed out that at launch ramps, handrails and guardrails on some gangways (primarily on short gangways) are not provided because they interfere with boat lines as boats are launched or retrieved. One commenter mentioned that providing accessible boarding piers was not a problem, but providing the accessible route to it was a problem. The commenter noted that if the requirements were too difficult, entities would stop providing boarding piers.

*Response.* Anecdotal information indicates that boarding piers are not provided at all launch ramps. For example, the Michigan Department of Natural Resources reported that of their over 900 boating access sites, approximately half are provided with boarding piers (also known as courtesy piers or docks). Since boarding piers may improve the ability for persons with disabilities to embark and disembark boats at launch ramps, the final rule seeks to not discourage entities from providing them. The Board has identified two areas of concern.

The first concern relates to accessing floating boarding piers. Boarding piers, when provided, tend to be quite small as compared to the square footage of piers used as boat slips. Many boating facilities consist of only one or two launch ramps and maybe a boarding pier, and contain no other boating structures. Providing access to floating boarding piers are subject to many of the same factors as providing access to floating piers which contain boat slips. In the final rule, the Board added exception 1 to section 15.2.4. This exception allows launch ramp boarding piers to use specified exceptions contained in section 15.2.2.

Exception 4 in section 15.2.2 allows boating facilities with less than 25 slips to have shorter gangways. To provide a similar small facility exception for boarding piers, exception 2 was added to 15.2.4. The exception exempts gangways accessing floating boarding piers at launch ramps from complying with the maximum slope requirements of ADAAG 4.8.2 where the gangways are at least 30 feet in length.

The Board's second area of concern focused on the effect of the accessible route requirements on a launch ramp, where the connection to a boarding pier is located within a launch ramp. As noted in the comments, the issue is not only the running slope requirement of an accessible route, but also includes the handrail, landing, and maximum rise requirements.

To address this concern, the Board added exception 3 to this section of the final rule. This exception provides that the requirements of ADAAG 4.8 do not apply to accessible routes located within launch ramps which serve floating boarding piers or skid piers also located within launch ramps. Although ADAAG 4.8 does not apply, other requirements of ADAAG 4.3 are applicable. For example, an accessible route with a minimum width of 36 inches must serve the boarding pier. Large ''V'' shaped groves which are typically provided to increase tire traction would not be allowed by ADAAG 4.3.6 (which references ADAAG 4.5) within the accessible route. Cross slopes requirements of ADAAG 4.3.7 remain 1:50 maximum. It is noted that ADAAG 4.3 does not require the entire launch ramp to meet these requirements, but does apply them to the 36 inch wide minimum accessible

route which shares the launch ramp surface and connects to the boarding pier and accessible elements on the boarding pier. Exception 3 only exempts the ramp requirements contained in ADAAG 4.8, such as maximum slope, maximum rise, handrails, and level landings. The following two examples are included in the appendix.

*Example 1.* A chain of floats are provided on a launch ramp to be used as a boarding pier which is required to be accessible by 15.2.4. At high water, the entire chain is floating and a transition plate connects the first float to the surface of the launch ramp. As the water level decreases, segments of the chain end up resting on the launch ramp surface, matching the slope of the launch ramp. As water levels drop, segments function also as gangways because one end of a segment is resting on the launch ramp surface and the other end is connecting to another floating segment in the chain.

Under ADAAG 4.1.2(2), an accessible route must serve the last float because it would function as the boarding pier at the lowest water level, before it possibly grounded out. Under exception 3, because the entire chain of floats is part of the accessible route, each float is not required to comply with ADAAG 4.8, but must meet all other requirements in ADAAG 4.3, unless exempted by exception 1. In this example, because the entire chain also functions as a boarding pier, the entire chain must comply with the requirements of 15.2.5, including the 60 inch minimum clear pier width provision.

*Example 2.* A non-floating boarding pier supported by piles divides a launching area into two launch ramps and is required to be accessible. Under ADAAG 4.1.2(2), an accessible route must connect the boarding pier with other accessible buildings, facilities, elements, and spaces on the site. Although the boarding pier is located within a launch ramp, because the pier is not a floating pier or a skid pier, none of the exceptions in 15.2.4 apply. To comply with ADAAG 4.3, either the accessible route must run down the launch ramp or the fixed boarding pier could be relocated to the side of the two launch ramps. The second option leaves the slope of the launch ramps unchanged, because the accessible route runs outside the launch ramps.

*Comment.* A few commenters questioned how the accessible route required by ADAAG 4.1.2 should connect a launch ramp which does not have a boarding pier.

*Response.* In the Recreation Access Advisory Committee, Boating and Fishing Facilities subcommittee report, the subcommittee recommended that the accessible route run to the crown of the launch ramp. In response to the ANPRM, commenters questioned how the ''crown'' would be determined. Because a precise spot at the launch ramp could not be identified to which the accessible route connects, neither the proposed rule nor the final rule addresses this issue. As the final rule does not intend to change the slope of launch ramps, the accessible route required by ADAAG 4.1.2 is required to connect the launch ramp, but the specific point of connection is not set out.

*Section 15.2.4.1 Boarding Pier Clearances*

This section requires that at boarding piers, the entire length of the piers required to be accessible by section 15.2.4, must comply with section 15.2.5.

*Comment.* Some commenters questioned if the proposed rule required a minimum length of 40 feet for the accessible boarding piers.

*Response.* Neither the proposed rule, nor the final rule establishes a minimum length for accessible boarding piers. The accessible boarding pier would have a length which is at least equal to other boarding piers provided at the facility. Where only one boarding pier is provided, it would have a length equal to what would have been provided if no access requirements applied. The entire length of accessible boarding piers would be required to comply with the same technical provisions that apply to accessible boat slips. For example, at a launch ramp, if a 20-foot long accessible boarding pier is provided, the entire 20 feet must comply with the pier clearance requirements in section 15.2.5. Likewise, if a 60-foot long accessible boarding pier is provided, the pier clearance requirements in section 15.2.5 would apply to the entire 60 feet. An advisory note has been added to the appendix which provides similar information regarding lengths of boarding piers.

*Section 15.2.5 Accessible Boat Slips*

This section sets out requirements for accessible boat slips. Section 15.2.5.2 specifically addresses cleats and other boat securement devices.

*Section 15.2.5.1 Clearances*

This section requires that accessible boat slips be served by clear pier space 60 inches wide minimum and at least as long as the accessible boat slips. Additionally, every 10 feet maximum of linear pier edge serving the accessible boat slips must contain at least one continuous clear opening 60 inches minimum in width. The provision is unchanged from the proposed rule, although three exceptions have been added.

*Exception 1 Reduced Width*

Exception 1 allows the width of the clear pier space to be 36 inches minimum for a length of 24 inches maximum, provided that multiple 36 inch wide segments are separated by segments that are 60 inches wide and 60 inches long.

*Comment.* Some commenters requested piers to be 72 to 96 inches wide to improve safety for persons who use wheelchairs. Others commenters were satisfied with the 60 inch minimum width but wanted the ability to reduce the width down to 36 inches in places to get around objects like supporting piles located within the clear pier space. One commenter requested, in response to the draft final rule, a reduced width because environmental agencies are making it harder to install finger piers wider than 4 feet.

*Response.* The 60 inch minimum width is consistent with the width required at access aisles for standard accessible parking spaces and was supported in the Recreation Access Advisory Committee, Boating and Fishing Facilities subcommittee report. Because the final rule allows obstructions to be located around the edge of the finger piers where 60 inch openings are available, unlike vehicle access aisles, it is not necessary for the entire pier to have a 60 inches clear width. Exception 1 allows reductions in the width of the pier clearance. The exception was included in the draft final rule and received little comment. An advisory note has been added to the appendix which recommends that clear pier spaces be wider than 60 inches, particularly on floating piers which are less stable, to improve the safety for persons with disabilities.

*Comment.* A number of commenters recommended that instead of the 60 inch clear width running the length of the slip, only one 60 inch by 60 inch space be required at the accessible boat slip. This space could be placed either alongside the slip or at the head of the slip on the main pier. These commenters also recommended that where finger piers at the facility are longer than 20 feet, a second 60 inch by 60 inch space should be provided at the slip.

*Response.* As recreational boats vary in shape, size, and layout, it cannot easily be known where persons with disabilities would embark or disembark a boat. By requiring the clear pier space along the entire length of the slip, access options between the boat and the pier are improved. Although the final rule does not require the entire edge of the clear pier space to be unobstructed, by extending the clear pier space the length of the slip, the number of 60 inch continuous clear openings increases which further improves access between the boat and the pier.

*Exception 2 Edge Protection*

Exception 2 permits edge protection 4 inches high maximum and 2 inches deep maximum at the continuous clear openings.

*Comment.* The proposed rule required that every 120 inches maximum of linear pier edge serving the accessible boat slips contain at least one continuous clear opening 60 inches minimum. A few commenters noted that the provision would not allow edge protection to be placed within the opening.

*Response.* In response to the ANPRM, commenters had mixed views on the use of edge protection. Some maintained that edge protection was necessary to protect persons who use wheelchairs from falling off the pier edges. Others maintained that edge protection created a tripping hazard as persons moved between a pier and boat. The proposed rule did not address edge protection at piers but did prohibit its installation at the continuous clear openings at the accessible slips. The Board has not taken a position on whether edge protection should be provided at piers, but has provided exception 2 so as not to prohibit its use at the continuous clear openings. Maximum dimensions are provided to control the size of the edge protection so as not to block the clear openings.

*Exception 3 Alterations to Existing Facilities*

Exception 3 provides that in alterations to existing facilities, the clear pier space can be located perpendicular to the boat slip and extend the width of the boat slip. This exception is available only if the facility has at least one boat slip complying with section 15.2.5 and where further compliance with 15.2.5 would result in a reduction in the number of boat slips available or result in a reduction in the widths of existing slips.

*Comment.* Some commenters disagreed with requiring clear pier spaces alongside accessible boat slips where finger piers are not provided within the facility. Others noted that at existing facilities, increasing finger pier widths, on which pier clearances would be provided, may reduce the number of slips available.

*Response.* Although commenters at the two information meetings on the draft final rule indicated that more recreational boats are designed to be boarded from the stern, many recreational boats still provide for side boarding. To maximize the options for persons with disabilities to board, the requirement that the clear pier space extend the length of the accessible boat slip in newly constructed facilities has not been modified. However, exception 3 has been added to the final rule to reduce the impact of this provision on existing facilities.

*Section 15.2.5.2 Cleats and Other Boat Securement Devices*

This section clarifies that cleats and other boat securement devices are not required to comply with ADAAG 4.27.3.

*Comment.* A few commenters noted that at accessible boat slips, controls and operating mechanisms (such as power receptacles, and water and sewage connections) should comply with ADAAG 4.27.

*Response.* Although section 15.2 contains requirements for recreational boating facilities, other requirements in ADAAG 4.1 still apply. Therefore, ADAAG 4.1.3(13) would require controls and operating mechanisms, such as electrical and water connections, at accessible boat slips to comply with ADAAG 4.27. However, because mooring features used to secure a boat, when raised, exert higher load pressures at the point of pier attachment, the danger of failure increases, particularly on floating piers. For this reason, section 15.2.5.2 was added which states that the reach range requirements of ADAAG 4.27.3 do not apply to boat securement devices.

*Section 15.3 Fishing Piers and Platforms*

*Section 15.3.1 General*

This section requires that newly designed or newly constructed and altered fishing piers and platforms comply with section 15.3.

*Comment.* Commenters questioned how the guidelines would apply to places that people may fish from, but were not constructed for fishing (*e.g.*, a breakwater jetty, a bridge, or a flood control dam).

*Response.* Structures that have been designed and constructed for purposes other than fishing, even though persons may use the structure for fishing, are not required to comply with this section. However, piers and platforms that are newly designed or constructed and altered for the specific purpose of fishing are required to comply with this section.

*Section 15.3.2 Accessible Route*

This section requires that accessible routes, including gangways that are part of accessible routes serving fishing piers and platforms comply with ADAAG 4.3. Exception 1 permits the accessible route, serving floating fishing piers and platforms to use exceptions 1, 2, 5, 6, 7, and 8 in section 15.2.2. Exception 2 provides that where the total length of the gangway or series of gangways serving as part of a accessible route is at least 30 feet, the maximum slope specified by ADAAG 4.8.2 does not apply to the gangways.

*Comment.* The proposed rule required the accessible route connecting to floating fishing piers and platforms to comply with the provisions for accessible routes at boating facilities. This section received only a few comments. One commenter recommended that the square footage values in the proposed rule be reduced for application to floating fishing piers. Another commenter noted that such a requirement would discourage entities from providing fishing piers.

*Response.* The final rule references exceptions 1, 2, 5, 6, 7 and 8 of 15.2.2 (Boating Facilities) for floating fishing piers and platforms. Exception 4 in section 15.2.2 allows boating facilities with less than 25 slips to have shorter gangways. To provide a similar small facility exception for floating fishing piers, exception 2 was added to section 15.3.2 and is based on a similar exception in section 15.2.4 which applies to floating boarding piers. The following example is included in the appendix.

*Example.* To provide access to an accessible floating fishing pier, a gangway is used. The vertical distance is 60 inches between the elevation that the gangway departs the landside connection and the elevation of the pier surface at the lowest water level. Exception 2 permits the use of a gangway at least 30 feet long, or a series of connecting gangways with a total length of at least 30 feet. The length of transition plates would not be included in determining if the gangway(s) meet the requirements of the exception.

*Comment.* One designer questioned whether the proposed rule prohibited gangways which comply with ADAAG 4.8.

*Response.* ADAAG 4.1.2(2) requires at least one accessible route complying with ADAAG 4.3 to connect accessible buildings, facilities, elements, and spaces that are on a site. ADAAG 4.3.7 requires an accessible route with a running slope greater than 1:20 to comply with the ramp requirements of ADAAG 4.8. Although the final rule contains exceptions which modify the requirements of ADAAG 4.8, the use of these exceptions is not mandatory. Designers are encouraged to provide greater access for gangways and exceed the minimums contained in the exceptions and the minimum requirements of ADAAG 4.8.

*Section 15.3.3 Railings*

This section requires that where railings, guards, or handrails are provided, they must comply with 15.3.3.

*Section 15.3.3.1 Edge Protection*

This provision requires edge protection that extends 2 inches minimum above the ground or deck surface. An exception provides that where the railing, guardrail, or handrail is 34 inches or less above the ground or deck surface, edge protection is not required if the deck surface extends 12 inches minimum beyond the inside face of the railing. The toe clearance must be 9 inches minimum above the ground or deck surface beyond the railing and be 30 inches minimum wide.

*Comment.* The proposed rule did not permit other options for edge protection on floating fishing piers and platforms. Commenters provided designs of fishing stations incorporating an extended deck past the rail or guard that enable a person using a wheelchair or mobility device the opportunity for toe clearance beyond the face of the railing or guard. They felt that this design should be permitted and encouraged the Board to incorporate into the final rule.

*Response.* The proposed rule required edge protection where railings are provided and did not provide the flexibility designers of fishing piers and platform requested. An exception has been added to the final rule to permit more flexibility in providing a variety of designs that promote increased levels of accessibility to anglers with disabilities.

*Section 15.3.3.2 Height*

This section requires at least 25 percent of the railings to be a maximum of 34 inches above the ground or deck surface.

The Board sought comment on the height of lowered guards and what steps have been taken to ensure that their use was permitted under applicable building codes and standards. Additionally, in light of concerns that have been raised about safety issues related to lower guards, the Board also sought information on experiences designers or operators have had where guards on floating fishing piers and platforms have been lowered to accommodate individuals using wheelchairs and other mobility devices while fishing.

*Comment.* Many commenters supported the use of lowered rails or guards to provide persons using wheelchairs or other mobility devices the opportunity to fish. Commenters gave examples of providing lowered rails or guards for many years, in many different applications, with no reported safety or injury problems. Commenters provided descriptions of unique and innovative designs of fishing stations constructed for use by persons with disabilities.

*Response.* The final rule retains the requirement that, where provided, 25 percent of the railing must be at a lowered height. Current designs, provided by commenters, supported a maximum height of the lowered rail or guard to be at 34 inches above the ground or deck surface. The height requirement for 25 percent of the rail has been changed in the final rule to 34 inches maximum above the ground or deck surface.

*Comment.* Some commenters believed that the Occupational Safety and Health Administration (OSHA) standards apply to recreational fishing piers and platforms. The OSHA standards apply to places where employment is performed and prescribe a 42 inch high railing along open sides of platforms located 4 feet or more above the floor. 29 CFR 1910.5 and 1910.23 (c) and (e). Other commenters believed that recreational fishing piers and platforms are covered by State and local building codes, which typically prescribe 42 inch high guards along open sides of platforms located more than 30 inches above the floor. These commenters were concerned that requiring at least 25 percent of railings to be a maximum 34 inches high conflicts with the OSHA standards, and State and local building codes.

*Response.* Recreational fishing piers and platforms are subject to OSHA safety standards only if they are places of work. In some cases there may be both workers and recreational users on a pier. In those cases, OSHA standards would apply, and the pier would be exempted from the height requirements in the final rule, as discussed below.

The International Code Council has advised the Board that recreational fishing piers and platforms are not covered by model building codes unless they are an integral part of a building that is regulated by the adopting State or local authority. To avoid potential conflicts, an exception has been added to the final rule that permits a higher guard to be provided along a recreational fishing pier or platform where the guard complies with the International Building Code (IBC) (2000 edition) requirements for height (not less than 42 inches high) and opening limitations (4 inch diameter sphere cannot pass through any opening up to a height of 34 inches; and 8 inch diameter sphere cannot pass through any opening from a height of 34 inches to 42 inches). This exception can be used if a recreational fishing pier or platform is covered by a State or local building code; or if a design professional believes that a specific location warrants enhanced safety measures; or if an employer provides a 42 inch high railing to comply with OSHA standards.

*Section 15.3.3.3 Dispersion*

This section requires that lowered railings be dispersed throughout a fishing pier or platform.

*Comment.* A commenter requested guidance on the criteria used to determine dispersion.

*Response.* Anglers who stand can fish from any part of a pier or platform and can change location depending on the fishing or water conditions. Where railings, guards, and handrails have been installed on fishing piers and platforms, the height of the railings interfere with fishing and block vision for persons who use wheelchairs and other mobility devices. This provision requires that where railings are provided, the dispersion of the lowered railings provide similar choices to fish from a variety of locations. The distribution of lower railings could include locations of different water depths with some that provide shading or are close to shore, and could take into account the tides or water fluctuations.

*Section 15.3.4 Clear Floor or Ground Space*

This section requires that at least one clear floor or ground space complying with ADAAG 4.2.4 be provided where the lowered railing height is located. Where no railings are provided, at least one clear floor or ground space complying with ADAAG 4.2.4 must be provided. No substantive comments were received and no changes were made to this provision for the final rule.

*Section 15.3.5 Maneuvering Space*

This section requires that at least one maneuvering space complying with ADAAG 4.2.3 be provided on a fishing pier or platform. The maneuvering space is permitted to overlap the accessible route and the clear floor space required by 15.3.4. No substantive comments were received and no changes were made to this provision for the final rule.

*Golf*

*Section 3.5 Definitions*

Two terms used in this section are added to ADAAG 3.5 (Definitions).

A ''golf car passage'' is defined as a continuous passage on which a

motorized golf car, also known as a golf cart, can operate. Designers and operators sometimes use the term ''golf car path'' to identify what the Board is defining as a ''golf car passage.'' Because the term ''golf car path'' may connote a prepared surface, the term was not used. While a golf car passage must be usable by golf cars, it does not necessarily need to have a prepared surface.

A ''teeing ground'' is the starting place for a hole to be played. This definition is consistent with the United States Golf Association definition, which describes a teeing ground as a rectangular area two club-lengths in depth, with the front and sides defined by the outside limits of two tee-markers.

*Section 15.4.1 General*

This section requires newly designed or newly constructed and altered golf courses, driving ranges, practice putting greens, and practice teeing grounds to comply with 15.4.

*Section 15.4.2 Accessible Route—Golf Courses*

This section requires an accessible route to be 48 inches wide minimum, or 60 inches minimum if handrails are provided, to connect accessible elements and spaces located within the boundary of a golf course. Additionally, an accessible route must connect the golf car rental area, bag drop areas, practice putting greens, accessible practice teeing grounds, course toilet rooms, and course weather shelters.

Exception 1 permits the use of a golf car passage complying with section 15.4.7 in lieu of all or part of an accessible route. This exception does not apply to the required accessible route complying with 4.3 when connecting elements and amenities outside of the boundary of the golf course (*i.e.*, accessible vehicle parking spaces with the golf course clubhouse entrance). Exception 2 provides that handrails are not required on accessible routes within the boundary of a golf course. It is hazardous for handrails to be located through a green, or on teeing grounds, because of the danger of golf balls ricocheting off rails. Since course elements could be accessible from golf car passages in lieu of an accessible route, handrails would be of little utility along these routes.

The guidelines recognize that providing an accessible route may be impractical on a golf course for several reasons. First, the route of play for a golfer is dependent on where the ball lands and is therefore unpredictable. Secondly, there is an assumption that on many courses, golfers use a golf car to move throughout the course. Finally, requiring an accessible route throughout a course could alter the slopes within some courses and eliminate some of the challenge of the game. The guidelines permit accessible elements and spaces within the boundary of the course and areas used for practice putting or driving and other course amenities outside the boundary of the course to be connected through either an accessible route or a golf car passage.

The 48 inch minimum width for the accessible route is necessary to ensure passage of a golf car on either the accessible route or the golf car passage. This is important where the accessible route is used to connect the golf car rental area, bag drop areas, practice putting greens, accessible practice teeing grounds, course toilet rooms, and course weather shelters. These are areas outside the boundary of the golf course, but are areas where an individual using an adapted golf car may travel. A golf car passage may not be substituted for other accessible routes, required by ADAAG 4.1.2, located outside the boundary of the course. The following example is included in the appendix.

*Example.* An accessible route connecting an accessible parking space to the entrance of a golf course clubhouse is not covered by this provision permitting a golf car passage in lieu of an accessible route required by 4.1.2.

*Comment.* The proposed rule sought comment on the option of using a golf car passage in lieu of an accessible route for smaller courses (*i.e.*, 3 or 6 holes).

*Response.* Commenters supported the use of the golf car passage on smaller courses. The final rule provides golf course designers and operators the opportunity to choose between providing either a golf car passage or an accessible route for all courses regardless of size.

*Comment.* Commenters questioned who would be responsible for providing single rider adaptive golf cars. Additionally, commenters questioned if a course could establish criteria for restricting use due to terrain conditions. Others wanted to know if there are plans to create regulations or guidelines for accessible golf cars. Persons with disabilities supported the use of adaptive or single rider golf cars and gave examples of experiences at courses currently permitting or providing access via golf cars to courses.

*Response.* The Board develops and maintains accessibility guidelines for the built environment. It is outside the jurisdiction of the Board to address the operational and procedural requirements of a golf course. Operational and procedural issues are within the jurisdiction of the Department of Justice.

*Comment.* The requirements for an accessible route or golf car passage seek to provide access for players with disabilities to either practice or play the game of golf. The Board requested comments on how access should be provided for spectators during golf tournaments and competitions. Commenters provided examples and experiences of current accessibility practices encountered at many levels of tournaments and supported allowing the tournament committees to select holes (teeing areas, fairways, and putting greens) to provide accommodations and transportation to the selected areas throughout the golf course and surrounding areas.

*Response.* No additional requirements have been included in the final rule for spectators with disabilities attending tournaments or competitions. Facilities hosting tournaments or competitions must comply with all the other requirements of the ADA, including the general obligation to provide an equal opportunity to individuals with disabilities to enjoy the services provided. Additionally, ADAAG requires temporary facilities used during tournaments or competitions to provide access to assembly seating areas, portable restroom facilities, concessions, and all other available amenities. Access to these temporary facilities on a golf course may be achieved through either an accessible route or golf car passage.

*Section 15.4.3 Accessible Routes—Driving Ranges*

This section provides that an accessible route must connect accessible teeing stations at driving ranges with accessible parking spaces and must be 48 inches minimum in width. Where handrails are provided, the accessible route must be a minimum of 60 inches in width. An exception has also been added which permits a golf car passage to be used at driving ranges instead of an accessible route.

*Comment.* The proposed rule did not specifically address the accessible route provided at driving ranges. A commenter stated that a person who plays from a golf car would need to practice driving a golf ball from the same position and stance used when playing the game.

*Response.* The final rule requires both a stand alone driving range and a driving range located at a golf course to provide an accessible route that is 48 inches wide minimum or 60 inches minimum where handrails are provided,

to connect the accessible parking spaces to required accessible teeing stations.

*Section 15.4.4 Teeing Grounds*

This section requires teeing grounds to comply with section 15.4.4.

*Section 15.4.4.1 Number Required*

This section requires that where one or two teeing grounds are provided for a hole, one teeing ground must be accessible. Where three or more teeing grounds are provided for a hole, at least two teeing grounds serving a hole must be accessible.

*Comment.* The proposed rule required that if two teeing grounds were provided both must be accessible. Course designers and operators expressed concerns that if only two teeing grounds are provided at a hole requiring both to be accessible was too restrictive.

*Response.* The final rule has been revised to require two teeing grounds to be accessible when three or more teeing grounds are provided for a hole. The Board believes that requiring two teeing grounds to be accessible when three or more are provided will provide persons with disabilities with an option to play from different tees appropriate to their skill level and also provide course operators and designers with the flexibility they requested.

*Section 15.4.4.2 Forward Teeing Ground*

This section requires the forward teeing ground to be accessible. The forward teeing ground need not be accessible in alterations of existing courses when terrain makes compliance infeasible.

*Comment.* The proposed rule sought comment on the number of accessible teeing grounds that should be required for each hole and, if more than one accessible teeing ground is provided, whether it should be the forward tee. Commenters supported the option to play from different teeing grounds appropriate to player skill levels if multiple teeing grounds are provided per hole. Additionally, golfers with disabilities overwhelmingly supported requiring the forward teeing ground to be accessible regardless of the number of teeing grounds provided.

*Response.* The final rule provides a choice of teeing grounds for golfers with disabilities when three or more teeing grounds are provided per hole and also provides flexibility to course designers and operators. The final rule also requires that the forward teeing ground be the accessible tee regardless of the number of teeing grounds provided per hole.

*Comment.* The proposed rule did not provide an exception for alterations of existing teeing grounds from making the forward tee accessible. Commenters stated that requiring access to the forward teeing ground in alterations to existing courses may be too restrictive.

*Response.* Some teeing grounds on existing courses may be located on steep slopes and it may not be possible to provide a golf car passage to the forward teeing ground. The final rule exempts the forward teeing ground from being accessible in alterations where compliance is not feasible due to terrain.

*Section 15.4.4.3 Teeing Grounds*

This section requires accessible teeing grounds to be designed and constructed to allow a golf car to enter and exit the teeing ground.

*Comment.* The proposed rule required teeing grounds to provide a minimum clear area 10 feet by 10 feet with a surface slope not exceeding 1:48 in all directions. Course designers and operators stated that current designs of teeing grounds provide a clear area of at least 10 feet by 10 feet. Additionally, they expressed concern about maintaining a slope no greater than 1:48, and noted that settling of the soil and drainage problems occur with such a minimal slope. Others questioned how the slope of the teeing ground should be measured.

*Response.* Current design and construction practices for teeing grounds provide the needed space for golf car passages. Designers currently limit the slope of the teeing grounds to provide a level surface from which golfers tee off. The maximum slopes and minimum size requirements have been deleted from the final rule. The final rule requires teeing grounds to be designed and constructed to allow a golf car to enter and exit the teeing ground.

*Section 15.4.5 Teeing Stations at Driving Ranges and Practice Teeing Grounds*

This section requires that where teeing stations or practice teeing grounds are provided, at least 5 percent, but not less than one, of the practice teeing grounds must be accessible. This provision applies to practice facilities adjacent to a golf course, in addition to stand-alone facilities. No substantive comments were received and no changes have been made for the final rule.

*Section 15.4.6 Weather Shelters*

This section requires weather shelters that are provided on a golf course to be designed and constructed to allow a golf car to enter and exit and have a clear floor or ground space 60 inches by 96 inches. This space will allow a golf car to be driven directly into a weather shelter. No substantive comments were received and no changes have been made for the final rule.

*Section 15.4.7 Golf Car Passage*

This section requires openings at least 60 inches wide to be provided at intervals, not exceeding 75 yards, where curbs or other man-made barriers are provided along a golf car passage that would prohibit a golf car from entering a fairway.

*Comment.* The proposed rule required the 60 inch openings at intervals of 75 yards of golf car passage. Course designers and operators expressed concern that requiring openings at a fixed distance of 75 yards would be too restrictive and would not allow enough flexibility for natural characteristics of the course, hazard placement, and erosion control.

*Response.* The final rule requires the openings at intervals not to exceed 75 yards. These openings will provide access to the course at reasonable intervals, enabling a golfer using a golf car to play the game without extended travel distances and time requirements and also provide the flexibility the course designer and course operator need.

*Section 15.4.7.1 Width*

This section requires a golf car passage to be 48 inches wide minimum.

*Comment.* Commenters supported limited technical requirements for golf car passages. Currently there are no standards that govern the design or construction of golf car passages. Commenters felt that additional requirements would restrict designers and have the potential of altering the game.

*Response.* The 48 inch minimum dimension for a golf car passage is based on the standard width of gasoline or electric powered golf cars. The golf car passage may at times coincide with the golf car path, however, it is not required to include a prepared surface. The golf car passage is a continuous passage on which a motorized golf car can operate. No additional technical provisions for golf car passages have been included in the final rule.

*Section 15.4.8 Putting Greens*

This section requires space to allow a golf car to enter and exit the green.

*Comment.* Substantial comment was received on requiring putting greens and fairways to be accessible to golfers using adaptive single rider golf cars. Course

operators are concerned that allowing golf cars access to the green will cause damage to the greens and potentially cause holes to be closed for extended periods of time. Golfers with disabilities, organizations supporting golfers with disabilities, and golf car manufacturers provided information on current courses that allow for golf car passage on putting greens which showed little or no damage to the putting green surface.

*Response.* Single rider golf cars adapted for golfers with disabilities are available from about a dozen companies. These golf cars are generally designed to be ''greens friendly'' and have low ground pressure that is evenly distributed on all four tires. Some manufacturers report that the ground pressure of these golf cars is less than the ground pressure of a typically standing person and cause no turf damage even in wet conditions.

*Comment.* Course operators also raised operational issues such as whether they are required to make single rider adapted golf cars available for rental and whether they can restrict the use of golf cars on fairways and greens for certain weather or agronomic conditions.

*Response.* These issues go beyond the Board's jurisdiction and the requirements in this final rule. The Board anticipates that the Department of Justice will answer these operational issues when it amends its ADA regulations to incorporate the recreation facilities guidelines as standards.

*Section 15.5 Miniature Golf*

*Section 15.5.1 General*

This section requires newly designed or newly constructed and altered miniature golf courses to comply with section 15.5.

*Section 15.5.2 Accessible Holes*

This section requires at least 50 percent of all holes to be accessible and that the accessible holes be consecutive. With the reduction in the minimum number of accessible holes on a miniature golf course, the Board wants to provide a more socially integrated golfing experience for people using wheelchairs or other mobility devices. An exception also permits one break in the sequence of consecutive accessible holes, provided that the last hole on the miniature golf course is the last hole in the sequence. This exception is provided to allow some flexibility in the layout and design of a miniature golf course.

*Comment.* Significant comment was received from miniature golf course owners and operators regarding the number of holes required to be accessible. The proposed rule required each hole on a miniature golf course to be accessible, with an exception for 50 percent of elevated holes. Commenters were asked to give the Board guidance on differentiating between level and elevated holes. Few comments were received on definition alternatives. Some owners and operators believed that the requirement for all holes to be accessible would significantly impact course design to the extent that the experience may be ''fundamentally altered.'' Others cited space limitations, concerns about slowing the game down, and having the effect of ''compromising the challenge of the game.''

*Response.* The Board has significantly reduced the number of holes required to be accessible in newly constructed miniature golf courses to 50 percent of all holes.

*Comment.* During the comment period following the draft final rule, the Miniature Golf Association recommended that instead of making 50 percent of the holes accessible, miniature golf facilities should have the option of providing tools, equipment, or assistive devices to provide access. They specifically requested that assistive devices such as electric carts be permitted as an alternative to an accessible route. Several other commenters opposed the reduction in the number of accessible holes, expressing concerns about limiting the game for persons with disabilities to only half of the holes.

*Response.* The Board has maintained the requirement that a minimum of 50 percent of all holes in new construction be accessible. The final rule does not recognize the alternative use of assistive devices for providing access in new construction. Designing miniature golf course holes so electric carts can safely maneuver through the holes is likely to have as great or greater impacts than designing an accessible route. Requiring individuals with disabilities to use electric carts on miniature golf courses is also inconsistent with other provisions of the ADA which require goods, services, and facilities to be afforded in the most integrated setting appropriate.

Given the diversity of layouts and designs of miniature golf courses, the final rule does not distinguish between courses with elevated holes or those with largely level holes. The 50 percent reduction represents a compromise given the concerns presented. Other considerations relate to the accessible route connecting accessible holes. The Board has established this reduction to give relief where courses are designed on small parcels of land with existing terrain limitations. It is recommended that all holes on a miniature golf course be made accessible where space limitations and existing steep terrain are not present.

*Section 15.5.3 Accessible Route*

This section requires that the accessible route must connect the course entrance with the first accessible hole and the start of play area on each accessible hole. Since accessible holes must be consecutive, this section also requires the course to be configured to allow exit from the last accessible hole to the course exit or entrance. The course must be designed so as not to require an individual to back track through other holes to exit or move around the course. Where the accessible route is located on the playing surface of the accessible hole, five exceptions are permitted and are discussed below.

*Comment.* Miniature golf course operators were concerned that the surface commonly used on miniature golf course holes would not meet the requirements for accessible carpet. Their concerns were centered around the thickness of the surface. ADAAG 4.5.3 includes a requirement that the maximum pile thickness must be no more than ½ inch and be securely attached with a firm cushion, pad, or backing. Exposed edges must be fastened to floor surfaces and must have trim along the entire length of the exposed edge.

*Response.* The Board has added Exception 1 which exempts carpet used on miniature golf course holes from the provisions of ADAAG 4.5.3. Surfaces provided as a part of an accessible route, whether on or off the playing surface, must comply with ADAAG 4.5.2. ADAAG 4.5.2 requires the surface to be ''stable, firm, and slip resistant.''

*Comment.* Commenters raised concern about the use of readily removable curbs permitted in the proposed rule. Operators were concerned that their removable qualities would tempt younger players to use them inappropriately. Persons with disabilities questioned who would actually move the curbs and how problems related to their use would be addressed.

*Response.* The final rule does not allow the use of ''readily removable curbs''. This option was included to allow for passage on and off the course while containing the ball while in play. As an alternative, Exception 2 has been added which permits a 1 inch curb for an opening distance of 32 inches where the accessible route intersects the

playing surface of a hole. This permits passage of wheelchairs while containing the ball within the hole.

*Comment.* The proposed rule permitted a maximum slope of 1:4 for a 4 inch rise where the accessible route is located on the playing surface. A few commenters questioned how close together a designer could locate these steeply sloped surfaces. They were concerned about the appropriateness where these steep slopes existed for long distances without areas to rest.

*Response.* Exception 3 permits a slope of 1:4 maximum for a 4 inch rise where the accessible route is located on the playing surface of a hole. Exception 4 specifically addresses the issue of landings where sloped surfaces are provided. This exception permits the landings to be 48 inches long with slopes no greater than 1:20. ADAAG 4.8.4(3) requires landings to be 48 inches by 60 inches minimum, where ramps change direction. Providing a separation or break from the steeper slopes is necessary for individuals with disabilities to safely maneuver on the hole.

Exception 5 states that where the accessible route is located on the playing surface of a hole, handrails are not required.

*Section 15.5.3.2 Accessible Route—Adjacent to the Playing Surface*

Where the accessible route is located adjacent to the playing surface, the equirements of 4.3 apply. This provision clarifies that the accessible route may be located on the playing surface of the accessible hole or adjacent to the hole.

*Section 15.5.4 Start of Play Areas*

This section requires start of play areas required to comply with 15.5.2 to have a slope not steeper than 1:48 and to be 48 inches minimum by 60 inches minimum.

*Comment.* The proposed rule required the minimum space for the start of play area to be 60 inches by 60 inches. Commenters questioned the need for this space and recommended a reduction where possible especially where space limitations exist. Questions were also raised regarding the appropriateness of overlapping the accessible route with the start of play area.

*Response.* The final rule reduces the space required since the start of play area will usually not require a person using a wheelchair or mobility aid to make a complete turn. Rather, space is necessary for positioning to take the first shot of the hole. Consistent with ADAAG, unless otherwise specified, the accessible route and the clear space required at the start of play area are permitted to overlap.

*Section 15.5.5 Golf Club Reach Range*

This section requires all areas within accessible holes where golf balls rest to be within 36 inches maximum of an accessible route having a maximum slope of 1:20.

*Comment.* The proposed rule required that all level areas within accessible holes where golf balls rest be within 27 inches maximum of an accessible route. A few commenters questioned the appropriateness of the 27 inch dimension. They recommended an increase to include a broader range of skill levels and golf club lengths.

*Response.* The distance from the level areas has been increased to 36 inches to balance the impact on course design and incorporate the reach of a typical adult size golf club. This is a maximum distance from the accessible route which may be located either on the hole or adjacent to the hole. Where possible, designers should locate the accessible route as close as possible to the level areas on the course. This will improve the ability to reach the golf ball for a variety of users.

*Section 15.7 Exercise Equipment and Machines, Bowling Lanes, and Shooting Facilities*

*Section 15.7.1 General*

This section requires all newly designed or newly constructed and altered exercise equipment and machines, bowling lanes, and shooting facilities to comply with section 15.7.

*Section 15.7.2 Exercise Equipment and Machines*

This section requires at least one of each type of exercise equipment and machines to be provided with clear floor space complying with ADAAG 4.2.4 and be served by an accessible route. Clear floor space must be positioned for transfer or for use by an individual seated in a wheelchair. Clear floor spaces for more than one piece of equipment are permitted to overlap. Permitting clear spaces to overlap should reduce the space requirements within an exercise or health club facility.

*Comment.* The American Hotel and Lodging Association commented that the requirement for clear space at exercise equipment and machines created a burden for the lodging industry. Similar comments were also received from the International Health, Racquet, and Sport Club Association, who indicated that space limitations present in existing facilities will prohibit compliance with this provision.

*Response.* These guidelines apply only to newly constructed and altered buildings and facilities. Where exercise equipment and machines are altered or added to a facility, the provisions of 15.7.1 apply to those pieces that are altered or added. In the case of altered exercise equipment or machines, the provisions of ADAAG 4.1.6(1)(j) related to ''technical infeasibility'' will also apply. ADAAG 4.1.6(1)(j) permits departure from the technical provisions where existing physical or site constraints prohibit full compliance. Space limitations may prohibit full compliance with 15.7.2. In this case, designers and operators must comply to the ''maximum extent feasible''.

Requirements for existing buildings and facilities are addressed in the Department of Justice regulations and are subject to the requirements for ''readily achievable barrier removal'' where the facility is covered by title III of the ADA. Facilities covered by title II of the ADA are subject to the requirements for ''program accessibility''. See discussion in the background section of this preamble.

An appendix note is added to provide guidance on exercise equipment and machine layout to maximize space.

*Comment.* A few commenters requested guidance on what is intended with respect to ''types'' of exercise equipment and machines. Others suggested that the Board should not require access to exercise machines or equipment that require the user to stand such as tread mills or stair climbers.

*Response.* The final rule is not limited to exercise equipment or machines that do not require standing. Access to the various pieces of exercise equipment serves individuals who use mobility aids such as scooters and wheelchairs. Individuals with ambulatory disabilities including those using walkers, canes, and crutches will also benefit from an accessible route and clear floor space next to a treadmill or stationary bike or other exercise equipment. An appendix note provides guidance on the different types of exercise equipment and machines. It also suggests that owners and operators consider including exercise equipment and machines within their facilities that provide for upper body cardiovascular exercise. This will add to the diversity of exercise options for everyone.

With respect to the issue of ''type'', a stationary bicycle would be considered one type. A rowing machine would also be considered a type. While both provide a cardiovascular exercise, they are considered two different types for purposes of these guidelines. In terms of strength training machines, a bench

press machine is considered a different type than a biceps curl machine. The requirement for providing access to each type is intended to cover the variety of strength training machines. Where operators provide a biceps curl machine and free weights, both are required to meet the provisions in this section, even though an individual may be able to work on their biceps through both types of equipment. Where the exercise equipment and machines are only different in that different manufacturers provide them, only one of each type of machine is required to meet these guidelines. For example, where two bench press machines are provided and each is manufactured by a different company, only one is required to comply.

*Section 15.7.3 Bowling Lanes*

This section requires that where bowling lanes are provided, at least 5 percent, but not less than one lane of each type must be accessible.

*Comment.* The Bowlers Proprietors Association expressed concern about requiring 5 percent of bowling lanes to be accessible. Their comments focused on the difficulty of providing ramps to gain access to bowling lanes within existing facilities. They also questioned how to apply the 5 percent minimum requirement where a bowling facility has multiple lanes.

*Response.* As previously indicated, these guidelines apply to newly constructed and altered facilities. When a bowling facility is altered, the provisions of 15.7.2 will apply to the lane that is undergoing an alteration and does not require all other lanes to be modified unless required by ADAAG 4.1.6 (Path of Travel). Other obligations related to existing facilities covered by titles II and III of the ADA are addressed in the Department of Justice regulations.

Where the required number of accessible elements to be provided is determined by calculations of ratios or percentages and remainders or fractions result, the next greater whole number of such elements should be provided. For example, if 18 lanes of one type are provided, one lane would be required to be accessible in new construction. If 24 bowling lanes of one type are provided in new construction, a minimum of two accessible bowling lanes would be required in new construction.

*Comment.* The Bowlers Proprietors Association also expressed concern about the number of accessible bowling lanes required in those facilities where different types of bowling is provided. They were also concerned about facilities that provide both ten pin and duck pin bowling. They believed that a 5 percent requirement for both types was excessive and recommended that the requirement be limited to the type that is dominant within a given facility. Further, the Bowlers Proprietors Association questioned what made a bowling lane accessible.

*Response.* In facilities where both ten pin and duck pin bowling are provided, the 5 percent requirement for each type will typically result in one of each type of lane being accessible.

The final rule does not include any further technical provisions for bowling lanes required to be accessible. Like other areas of sport activity, the requirement is for an accessible route to connect to the area of sport activity, in this case, the bowling lane. Specific exemptions to ADAAG 4.4 (protruding objects) and 4.5 (surfacing requirements) are applied within the area of sport activity. Therefore, bowling lanes which are necessarily waxed to allow the ball to travel, are not required to be slip resistant.

*Section 15.7.4 Shooting Facilities*

This section requires that where fixed firing positions are provided at a site, at least 5 percent, but not less than one, of each type of firing position must be accessible.

*Comment.* A few commenters questioned why the Board did not require an accessible route to the target areas as well as the fixed firing positions. Commenters also questioned the application of this section to trap and skeet facilities where the facilities are not entirely fixed. Others questioned what factors should be considered in determining the different types of firing positions.

*Response.* The Board has not included a requirement for an accessible route to the target areas since targets are often moveable, making it difficult to locate the accessible route effectively. There is also difficulty in defining what is considered the ''target'' area. Where facilities contain a combination of fixed and non-fixed elements, operators should consider the general nondiscrimination requirements of the ADA. Direction on these and other issues related to the use of shooting facilities should be obtained from the Department of Justice. Factors to be considered in determining the types of fixed firing positions include whether covering and lighting is provided, and which shooting events the fixed firing position is intended to support.

*Section 15.7.4.1 Fixed Firing Positions*

This section requires that accessible fixed firing positions contain a 60 inch diameter space and have a slope not steeper than 1:48. No substantive comments were received and no changes have been made to this provision in the final rule.

*Section 15.8 Swimming Pools, Wading Pools, and Spas*

*Section 3.5 Definitions*

The final rule provides a definition for a catch pool which is defined as a pool used as a terminus for water slide flumes.

*Comment.* The proposed rule did not define the term catch pool. Commenters requested that catch pools be exempt since access is not required for water slides.

*Response.* The term ''catch pool'' is added to the final rule since it is used in an exception in the final rule. Exception 3 to section 15.8.1 exempts catch pools from complying with the requirements of this section, provided that an accessible route connects to the catch pool edge.

*Section 15.8.1 General*

This section requires newly designed or newly constructed and altered swimming pools, wading pools, and spas to comply with 15.8. An exception has been added to the final rule that provides that an accessible route is not required to serve raised diving boards or diving platforms provided that an accessible route is provided to the base of the raised diving board or platform.

*Section 15.8.2 Swimming Pools*

This section requires that at least two means of entry be provided for each public or common use swimming pool. A sloped entry or lift must be one of the primary means of access. The secondary means of access could include a pool lift, sloped entry, transfer wall, transfer system, or pool stairs.

*Comment.* The proposed rule permitted a moveable floor as a secondary means of entry. Commenters stated that even though moveable floors may have some practical applications they do not provide independent access and often place a person with a disability on display while the pool is evacuated and the floor raised to provide access. Additionally, commenters raised concerns regarding the removal of handrails and other means of egress prior to lifting the pool floor.

*Response.* The option of using a moveable floor as a secondary means of accessible entry in public or common use swimming pools has been deleted from the final rule.

The Board has also deleted the requirement that the second means of access not duplicate the first means of

access in larger pools in the final rule. This should give designers additional flexibility in choosing between the various means of access. An appendix note recommends that where two means of access into the water are provided, different means are recommended.

*Exception 1 Small Pools With Less Than 300 Linear Feet of Pool Wall*

Exception 1 permits public or common use swimming pools with less than 300 linear feet of pool wall to only provide one accessible means of entry by either a swimming pool lift or a sloped entry.

*Comment.* A commenter suggested that Exception 1 should be modified to refer to pool wall that is available for entry into the pool. They explained that pool walls at diving areas and pool decks where there is no available pool entry because of landscaping or adjacent structures should not be counted when determining the number of accessible means of entry required.

*Response.* Exception 1 is intended to provide small pools with relief from providing more than one accessible means of entry. It was not intended for large pools that could limit the locations of entry with landscaping or other structures from requiring additional accessible means of entry.

*Exception 2 Pools Where Access Is Limited to One Area*

Exception 2 has been added to the final rule and permits wave action pools, leisure rivers, sand bottom pools, and other pools where user access is limited to only one area, to provide one accessible means of entry by either a swimming pool lift, sloped entry, or a transfer system.

*Comment.* Commenters from speciality pool operators and leisure river designers expressed concerns for safety, where there is wave action or moving water, when providing additional accessible means of entry in these unique water environments. Wave action pools typically provide a large area of zero grade entry, where everyone enters the water. Providing an accessible means of entry along the high walls could be very dangerous. Leisure rivers are constructed to provide a safe area where staff can assist individuals into the current at one location to control access to and from the moving water.

*Response.* In response to the safety concerns provided by designers and operators of these moving water experiences, only one accessible means of entry is required in the final rule, when user access is limited to one area.

*Exception 3 Catch Pools*

Exception 3 exempts catch pools from these requirements, provided that an accessible route connects to the catch pool edge.

*Comment.* The proposed rule did not include any specific requirements for access to water slides. Comments on the proposed rule and the draft final rule supported not requiring access to the top of water slides.

*Response.* An exception has been added to the final rule exempting water slides from accessibility. *See* ADAAG 4.1.1 (5) (b) (v). To be consistent with the water slide exception, the final rule also exempts the catch pool at the discharge area of a water slide from providing an accessible means of entry or exit from the catch pool, provided that an accessible route connects to the catch pool edge.

*Section 15.8.3 Wading Pools*

This section requires at least one accessible means of entry into each wading pool. The means of entry must be a sloped entry.

*Comment.* The proposed rule required the means of entry into wading pools to be either a sloped entry, transfer wall, or a transfer system. The proposed rule also sought comment on the appropriateness of providing a transfer wall or other transfer system as a means of access into a wading pool. Several commenters expressed concern about the potential dangers to children that may use the transfer walls or systems inappropriately for play or diving.

*Response.* The final rule limits the accessible means of entry into a wading pool to a sloped entry only. Examination of the different means of access into wading pools found zero grade entry to be the most appropriate and currently most provided means of entry.

*Section 15.8.4 Spas*

This section requires at least one accessible means of entry into spas. The means of entry must be a pool lift, transfer wall, or transfer system. An exception allows for five percent, but not less than one spa, where spas are provided in a cluster, to be accessible. No substantive comment was received and no changes have been made to this section in the final rule.

*Section 15.8.5 Pool Lifts*

This section provides the technical requirements for pool lifts.

*Section 15.8.5.1 Pool Lift Location*

This provision requires pool lifts to be located where the water level does not exceed 48 inches.

*Comment.* The proposed rule did not specify the location of a pool lift. Commenters with disabilities and individuals who work in environments where people with disabilities use pool lifts expressed concern that pool lifts may be placed in areas where the water depth would not permit assistance in the water if needed. Comments on the draft final rule supported the requirement for a pool lift to be located in a water depth of 48 inches or less whenever possible. Commenters also gave examples of when the location of a pool lift should be allowed in an area where the water depth is greater than 48 inches.

*Response.* The final rule requires a pool lift to be located where the water level does not exceed 48 inches. Two exceptions have been added to the final rule in response to comments received. Exception 1 permits the use of pool lifts at any location where the entire pool has a depth greater than 48 inches. Exception 2 permits pools with multiple pool lift locations to provide at least one where the water depth does not exceed 48 inches.

*Section 15.8.5.2 Seat Location*

This section requires the centerline of the seat, when in the raised position, to be located over the deck and 16 inches minimum from the edge of the pool. Additionally, the deck surface between the centerline of the seat and the pool edge must not have a slope greater than 1:48.

*Comment.* The proposed rule required the centerline of the seat, when in the raised position, to be located over the deck and 20 inches minimum from the pool edge. Comments from lift manufacturers expressed concern about the 20 inch minimum distance. They elaborated on the difficulties associated with providing a lift that places the user away from the pivot point of the lift a distance of 20 inches. Additionally, they commented that aquatic lifts with the centerline of the seat at least 20 inches away from the pool edge may not clear the footrest over the curbing or pool edge provided on some pools.

*Response.* Based on the concerns of commenters, the distance measured from the centerline of the lift seat to the edge of the pool has been reduced from 20 inches to 16 inches minimum. The location of the seat in relation to the edge of the pool is especially important to facilitate safe transfers. The Board is concerned about locating the seat either over the water or too close to the deck edge for safety reasons. This provision has been modified to address design limitations and incorporate the

maximum distance from the pool edge to ensure safety.

*Section 15.8.5.3 Clear Deck Space*

This section requires a clear deck space on the side of the seat opposite the water and parallel with the seat. The space is required to be 36 inches wide minimum and to extend forward 48 inches minimum from a line located 12 inches behind the rear edge of the seat. The clear space is specified in relationship to the seat to allow unobstructed space for either side or diagonal transfer. Additionally, the clear deck space must have a slope not greater than 1:48.

*Comment.* The proposed rule required the clear deck space to be a minimum of 30 inches wide. Commenters requested additional space to permit greater flexibility for transfer position preferences and the varied abilities of persons requiring the use of a pool lift. Commenters expressed a preference that the clear deck space should be required to provide a level surface from which to transfer from a mobility device to the lift seat.

*Response.* The final rule increases the clear deck space required on the side of the seat opposite the water to be a width of 36 inches minimum and that the clear deck space provide a surface with a slope not greater than 1:48. The additional space will facilitate the maneuvering that may be needed by a person using a mobility device preparing for a transfer to the seat of a pool lift.

*Section 15.8.5.4 Seat Height*

This section requires the height of a lift seat to be designed to allow a stop at 16 inches minimum to 19 inches maximum measured from the deck to the top of the seat surface when the seat is in the raised (load) position.

*Comment.* The proposed rule required the height of the lift seat to be 16 inches minimum to 18 inches maximum. Commenters requested a greater range of seat heights to transfer to or from when the lift is in the up position. They suggested a seat height that could accommodate the needs of users of all ages and abilities would be more beneficial.

*Response.* Information obtained from the Board sponsored research project supported the height requirement of a lift seat while in the upper load position to be at a height between 16 and 18 inches from the deck surface. In response to the comments received, the final rule departs slightly from the proposed rule, by permitting the lift seat to make a stop at the 16 to 19 inch height above the deck surface. The lift could provide additional stops at various heights provided that a stop is provided between 16 and 19 inches above the surface of the deck.

*Section 15.8.5.5 Seat Width*

This section requires a lift seat to be 16 inches wide minimum. No substantive comment was received and no changes have been made to this section in the final rule.

*Comment.* The proposed rule sought information on the different types of seats that are available on pool lifts and whether a specific type should be required in the final rule. Commenters did not provide a consensus on either the type of pool lift seat or the type of materials preferred by pool lift users.

*Response.* The final rule does not specify the type of material or the type of seat to be provided by a pool lift. Persons with disabilities involved in the Board sponsored research project expressed interest in all types of seats. An appendix note provides additional information on pool lift seats.

*Section 15.8.5.6 Footrests and Armrests*

This section requires footrests to be provided and that they move in conjunction with the seat. Additionally, this provision requires that, if provided, the armrest opposite the water be removable or fold clear of the seat when the seat is in the raised (load) position.

*Comment.* The proposed rule requested information on the appropriateness of requiring armrests on pool lifts and on their size and location. Commenters supported requirements based on their own personal needs with no consistent guidance on the location or size of armrests on a pool lift. One commenter questioned the appropriateness of providing a footrest on a lift for entry into a spa due to the water depth in some smaller spas.

*Response.* An exception has been added that provides that footrests are not required on pool lifts that provide an accessible means of entry into a spa. An appendix note encourages the use of a footrest in larger spas where possible and some type of retractable leg support is recommended for pool lifts used in all spas.

*Section 15.8.5.7 Operation*

This section requires that a pool lift be capable of unassisted operation from both the deck and water levels. This section also requires that controls and operating mechanisms be unobstructed when a lift is in use and comply with ADAAG 4.27.4. That section requires that operating controls not require tight grasping, pinching, or twisting of the wrist or more than 5 pounds of pressure to operate.

*Comment.* The proposed rule required that the lift controls and operating mechanisms may not require continuous manual pressure for operation. Commenters with disabilities supported the requirement of unassisted operation from both the deck and water levels. They reported the difficulty in finding the responsible person when lifts require assistance, especially in environments where pools are not routinely staffed. Commenters expressed concerns about getting out of the water, if assistance is required, especially where the pool is not staffed. Someone could be stranded in the water for extended periods of time awaiting assistance. Commenters suggested that pool lifts that require continuous manual pressure give the user greater control of their descent into the water and ascent back to the deck. Concern was expressed by a manufacturer of pool lifts that providing unassisted operation encourages individuals to swim alone and the potential dangers of causing injury are greatly increased when using an automatic lift without assistance.

*Response.* A large percentage of the respondents in the Board sponsored research project noted the importance of using a lift without assistance. Pool facility staff also indicated the importance of a device or design that could be used without pool staff assistance. While this provision requires the lift to be independently operable it does not preclude assistance from being provided. The final rule removes the requirement that pool lifts may not require continuous manual pressure for operation.

*Comment.* A few commenters expressed safety concerns where pool lifts are provided in pools that are unattended.

*Response.* Pool lifts have been commercially available for over 20 years. While the Board recognizes that inappropriate use of pool lifts may result in accident or injury, the Board is not aware of any incidents of injury or accidents involving pool lifts. The Board is also not aware of any evidence that shows that pool lifts are any less safe than other components of a pool facility, such as other means of pool entry, when they are used inappropriately. Manufacturers are also incorporating features which are intended to discourage inappropriate use, such as fold-up seats and covers.

*Section 15.8.5.8 Submerged Depth*

This section requires that a pool lift be designed so that the seat will

submerge to a water depth of 18 inches minimum. This depth is necessary to ensure buoyancy for the person on the lift seat once in the water. No substantive comment was received and no changes have been made to this section for the final rule.

*Section 15.8.5.9 Lifting Capacity*

This section requires that single person pool lifts provide a minimum weight capacity of 300 pounds. Lifts also must be capable of sustaining a static load of at least one and a half times the rated load.

*Comment.* The proposed rule required pool lifts to provide a minimum weight capacity of 300 pounds and be capable of sustaining a static load of at least three times the rated load. Several pool lift manufacturers supported the minimum weight requirement of 300 pounds. They questioned requiring a static load of three times the weight limit. They believed it was too excessive and would eliminate viable lifts from being provided. A commenter suggested that the static load requirement reference an international standard for lifts that require a static load of 1.6 times the weight capacity.

*Response.* The static load requirement has been reduced to one and a half times the weight capacity requirement.

*Section 15.8.6 Sloped Entries*

This section provides technical requirements for sloped entries designed to provide access into the water. Due to the similarities of this type of entry with ramps used in other buildings and facilities, existing ADAAG requirements have been referenced accordingly.

*Section 15.8.6.1 Sloped Entries*

This section requires sloped entries to comply with ADAAG 4.3 (Accessible Route), except for slip resistance.

*Comment.* Commenters questioned the ability of providing a slip resistant surface on a sloped entry that is under water.

*Response.* The final rule provides an exception for sloped entries from being slip resistant.

*Section 15.8.6.2 Submerged Depth*

This section requires sloped entries to extend to a depth of 24 to 30 inches below the stationary water level. This section also requires that where landings are required by ADAAG 4.8, at least one landing must be located between 24 and 30 inches below the stationary water level. Since wading pools are typically less than 24 to 30 inches deep, an exception provides that sloped entries are only required to extend to the deepest part of a wading pool. No substantive comment was received and no changes have been made to this section in the final rule.

*Section 15.8.6.3 Handrails*

This section requires handrails that comply with ADAAG 4.8.5 on both sides of all sloped entries. The clear width between handrails must be between 33 and 38 inches. Exception 1 does not require handrail extensions to be provided at the bottom of a landing serving a sloped entry. Exception 2 does not require the clear width between handrails where a sloped entry is provided for wave action pools, leisure rivers, sand bottom pools, and other pools where user access is limited to one area. Exception 3 exempts sloped entries in wading pools from providing handrails.

*Comment.* The proposed rule did not specifically address handrails in wading pools. Commenters expressed great concern about the potential dangers from children using handrails to play on or jump into the shallow water or the risk to other children in the wading pool.

*Response.* The Board is concerned about the potential dangers to children using handrails inappropriately. Exception 3 has been added to the final rule exempting wading pools from providing handrails.

*Section 15.8.7 Transfer Walls*

This section provides technical requirements for transfer walls.

*Section 15.8.7.1 Clear Deck Space*

This section requires clear deck space of 60 inches by 60 inches minimum with a slope not steeper than 1:48 to be provided at the base of a transfer wall. Where one grab bar is provided on a transfer wall, the clear deck space must be centered on the grab bar. This allows sufficient space for a transfer on either side of the grab bar. Where two grab bars are provided, the clear deck space must be centered on the clearance between the grab bars. No substantive comment was received and no changes have been made to this section for the final rule.

*Section 15.8.7.2 Height*

This section requires the height of transfer walls to be 16 to 19 inches measured from the deck below. The height requirement is consistent with pool lift seat heights and similarly addresses the needs of some children. The maximum height above the deck has been changed to 19 inches to be consistent with other transfer heights in ADAAG.

*Section 15.8.7.3 Wall Depth and Length*

This section requires the depth of a transfer wall to be 12 to 16 inches. As a minimum, the 12 inch depth of the transfer wall provides adequate space for a person to comfortably sit on the surface of the wall. The wall depth is limited to 16 inches maximum so that users are not required to traverse the wall to transfer to the water. The length of the transfer wall must be 60 inches minimum and must be centered on the clear deck space.

*Section 15.8.7.4 Surface*

This section requires that the surface of a transfer wall must not be sharp and must have rounded edges. Commenters overwhelmingly supported this section and no changes have been made to this section for the final rule.

*Section 15.8.7.5 Grab Bars*

This section requires at least one grab bar to be provided on a transfer wall. Grab bars are required to be perpendicular to the pool wall and extend the full depth of the wall. The top of the gripping surface must be 4 to 6 inches above the wall. Where two grab bars are provided, clearance between grab bars must be 24 inches minimum. Where one grab bar is provided, clearance must be 24 inches minimum on both sides of the grab bar. Grab bars must comply with ADAAG 4.26.

*Comment.* The proposed rule required the top of the gripping surface to be a maximum of 4 inches above the wall. Commenters expressed concern that 4 inches maximum above the wall surface, after factoring in the diameter of the grab bar, would not provide sufficient gripping space for persons transferring.

*Response.* The final rule provides a range from 4 to 6 inches above the wall to the top of the gripping surface. The range will provide greater flexibility and incorporate the diameter of the grab bar in providing users of all ages and abilities with an appropriate gripping surface.

*Section 15.8.8 Transfer Systems*

This section provides technical requirements for transfer systems used as a means of access into the water. A transfer system consists of a transfer platform, combined with a series of transfer steps that descend into the water. Users must transfer from their wheelchair or mobility device to the transfer platform and continue transferring from step to step.

*Section 15.8.8.1 Transfer Platform*

This section requires a transfer platform to be 19 inches deep by 24 inches wide. Transfer platforms must be provided at the head of each transfer system. No substantive comment was received and no changes have been made to this section for the final rule.

*Section 15.8.8.2 Clear Deck Space*

This section requires a clear deck space of 60 by 60 inches minimum with a slope not steeper than 1:48 at the base of the transfer platform. A level unobstructed space at the base of the transfer platform, centered along the 24 inch side, is necessary to facilitate a transfer from a wheelchair or mobility device. No substantive comment was received and no changes have been made to this section for the final rule.

*Section 15.8.8.3 Height*

This section requires the height of transfer platforms to be 16 to 19 inches measured from the deck. No substantive comment was received and no changes have been made to this section for the final rule.

*Section 15.8.8.4 Transfer Steps*

This section requires transfer steps to be 8 inches maximum in height. It also requires that transfer steps extend to a water depth of 18 inches minimum.

*Comment.* The proposed rule required transfer steps to be 7 inches maximum in height. Commenters questioned the inconsistences between the transfer step height of 8 inches required on a play area transfer step (15.6.5.2.2) to that provided in an aquatic setting.

*Response.* The final rule has been changed to require an 8 inch maximum step height in aquatic settings to be consistent with the play areas transfer step (15.6.5.2.2). An appendix note has been included recommending the height of the transfer step be minimized whenever possible.

*Section 15.8.8.5 Surface*

This section requires that the surface of a transfer system must not be sharp and provide rounded edges. Similar to other transfer surfaces, this is necessary to reduce the potential for injury. No substantive comment was received and no changes have been made to this section in the final rule.

*Section 15.8.8.6 Size*

This section requires each transfer step to have a tread depth of 14 to 17 inches and a minimum tread width of 24 inches.

*Comment.* The proposed rule required a range for the transfer step depth from 12 to 17 inches and a tread width of 22 inches minimum. Commenters pointed out the inconsistencies between the size of the transfer step in the play areas final rule (15.6.5.2.1) and for swimming pools.

*Response.* In an effort to provide uniformity between the play areas transfer steps and those located at swimming pools, the final rule modifies the transfer step to incorporate a range of 14 to 17 inches in depth and a minimum width of 24 inches.

*Section 15.8.8.7 Grab Bars*

This section requires one grab bar to be provided on each step and the transfer platform, or a continuous grab bar serving each transfer step and the transfer platform. Where provided on each step, the top of the gripping surface must be 4 to 6 inches above each step. Where a continuous grab bar is provided, the top of the gripping surface must be 4 to 6 inches above the step nosing. Grab bars must comply with ADAAG 4.26 and be located on at least one side of the transfer system. The grab bar located at the transfer platform must not obstruct transfer.

*Comment.* As previously discussed in section 15.8.7.5, the proposed rule required the top of the gripping surface to be 4 inches above the wall. Commenters expressed concern that 4 inches above the wall surface, after factoring in the diameter of the grab bar, would not provide sufficient space for persons transferring.

*Response.* The final rule requires the top of the gripping surface to be 4 to 6 inches above the wall. It is believed that the range will provide greater flexibility to users of all ages and abilities with an appropriate gripping surface.

*Section 15.8.9 Pool Stairs*

This section provides technical requirements for pool stairs used as a means of entry and exit to the water.

*Section 15.8.9.1 Pool Stairs*

This section requires pool stairs to comply with ADAAG 4.9 (Stairs), except as modified. ADAAG 4.9 has been referenced since stairs in pools are used in a similar manner as stairs elsewhere. No substantive comment was received and no changes have been made to this section in the final rule.

*Section 15.8.9.2 Handrails*

This section requires the width between handrails to be 20 to 24 inches. To reduce the potential for underwater protrusions, handrail extensions are not required at the bottom landing serving a pool stair.

*Comment.* The proposed rule required a 22 inch maximum width between handrails on pool stairs. Commenters expressed concern that a maximum distance of 22 inches may be too close for people that are large in size. Commenters with mobility impairments supported the handrail distance of 22 inches for providing the needed support while entering a pool by stairs.

*Response.* The final rule increases the maximum width between handrails to 24 inches. Separating the handrails more than 24 inches apart would make them too far apart for a larger class of people that require the support on pool stairs.

*Section 15.8.10 Water Play Components*

This section requires that where water play components are provided, the provisions of 15.6 (Play Areas) and ADAAG 4.3 apply, except where modified by this section.

*Comment.* The proposed rule sought comment on specific features within aquatic recreation facilities where it may be technically infeasible in new construction to comply with the proposed requirements in 15.8. Manufacturers and designers of water play components expressed concerns about having to provide ramp access to elevated play structures in standing water. Many of these components are at considerable distances from the top of the water surface and ramping would be very challenging and costly. Commenters with disabilities or individuals representing individuals with disabilities expressed a great desire to have access to these unique water experiences.

*Response.* The final rule requires that where water play components are provided, they must comply with 15.6 (Play Areas) and ADAAG 4.3, except as modified or otherwise provided in this section. The final rule is responsive to manufacturers and designers by providing an exception to providing ramp access, while providing persons with disabilities the opportunity to enjoy this unique family oriented water experience with their family and friends. Exception 1 exempts accessible routes, clear floor spaces, and maneuvering spaces that are submerged from the requirements for cross slope, running slope, and surface. Exception 2 permits transfer systems to be used in lieu of ramps to connect elevated play components.

**Regulatory Process Matters**

*Executive Order 12866: Regulatory Planning and Review*

This final rule is a significant regulatory action under Executive Order

12866 and has been reviewed by the Office of Management and Budget. The Board has assessed the benefits and costs of the rule. The assessment has been placed in the public docket and is available for inspection. The assessment is also available on the Board's Internet site (*http://www.access-board.gov*). The assessment is summarized below:

Benefits

The benefits of the final rule are not quantifiable, but are significant and are consistent with the President's New Freedom Initiative. The primary benefit is the fulfillment of civil rights realized by individuals with disabilities. There are 52.5 million Americans with disabilities. Almost one in five adults has some type of disability. Among individuals 15 years old and over, 25 million have difficulty walking or using stairs. The final guidelines will result in newly constructed and altered recreation facilities that are accessible to individuals with disabilities and will enable them to participate in a wide range of recreational opportunities. Individuals with disabilities can also realize significant health benefits by participating in the range of recreational opportunities made accessible as a result of the final guidelines.

Costs

For each type of facility addressed by the final rule, the assessment estimates the number of existing facilities and new facilities constructed annually, identifies the requirements that have cost impacts for new construction and alterations, estimates the unit costs per facility, and calculates the total annual compliance costs. The number of small entities is reported as a percentage of the facilities. To estimate cost impacts, the assessment relies on assumptions where sufficient data is not available. The assumptions are based on interviews with professionals in the affected industries and are disclosed in the assessment. The assumptions cannot be validated and may not reflect the real world. The assumptions may result in under or overestimating the impacts of the final rule. The relevant data for each facility type is presented below.

Amusement Rides

*Existing Facilities:* 377 amusement parks.

*New Construction:* 4 new amusement parks per year.

*Small Entities:* 81 percent of amusement parks.

*New Amusement Rides:* 343 new rides per year; 68 will be platform type rides with stepped entrances.

*New Construction Impacts:* New platform type rides with stepped entrances will need a ramp ($4,000 to $6,700 unit cost) or a platform lift ($12,000 to $15,000 unit cost) to provide an accessible route to the load and unload area; and additional space ($1,175 unit cost) in the load and unload area to provide wheelchair turning space and wheelchair storage space if a ride seat designed for transfer or transfer device is provided. For purposes of estimating the costs of providing access to new rides, the assessment assumes that a transfer device ($5,000 unit cost) would be provided for all new rides. New rides will need a sign ($100 unit cost) at the entrance of the queue or waiting line indicating the type of access provided (*e.g.*, wheelchair access or transfer access).

*Alterations Impacts:* Minimal.

*Total Annual Compliance Costs:* $2.5 million.

Boating Facilities

*Existing Facilities:* 12,000 marinas; no data on boat launch ramps.

*New Construction:* 240 new marinas per year.

*Alterations:* 600 existing marinas per year.

*Small Entities:* 99 percent of marinas.

*New Construction Impacts:* Gangways that are part of an accessible route will need to provide a 1:12 maximum slope or a gangway at least 80 feet long. The unit cost will be site specific. The assessment assumes unit costs will range from $15,000 to $35,000 where the maximum vertical level change is more than 2.5 feet, but less than 10 feet; and $33,000 to $45,000 where the maximum vertical level change is more than 10 feet. The impacts on new accessible boat slips and new accessible boarding piers at new boat launch ramps will be minimal.

*Alterations Impacts:* Alterations to existing boat slips are a primary function area and may trigger provision of an accessible route, unless the additional cost is disproportionate to the overall costs of the alterations or compliance is technically infeasible. The impacts on altered boat slips will be minimal.

*Total Annual Compliance Costs:* $10.8 million to $18.0 million.

Fishing Piers and Platforms

*Existing Facilities:* No data.

*New Construction:* No data.

*Small Entities:* No data.

*New Construction Impacts:* Minimal.

*Alterations Impacts:* Minimal.

*Total Annual Compliance Costs:* Minimal

Golf Courses

*Existing Facilities:* 17,108 golf courses.

*New Construction:* 377 to 524 new golf courses per year.

*Small Entities:* 99 percent of golf courses.

*New Construction Impacts:* Minimal.

*Alterations Impacts:* Minimal.

*Total Annual Compliance Costs:* Minimal.

Miniature Golf Courses

*Existing Facilities:* 7,500 to 10,000 miniature golf courses.

*New Construction:* 150 new custom design and 170 new modular miniature golf courses per year.

*Small Entities:* 100 percent of miniature golf courses.

*New Construction Impacts:* The assessment discusses potential impacts on new custom design courses (low profile courses, challenge courses, and adventure style courses) and new modular courses (indoor courses and outdoor courses). The impacts on new custom design low profile courses will be minimal. For purposes of estimating the costs for making at least 50 percent of the holes on the other custom design courses accessible, the assessment assumes a 10 percent increase in construction costs for new challenge type courses, and a 25 percent increase for new adventure style courses. New indoor modular courses may need to lease additional space to provide an accessible route for at least 50 percent of the holes, and new outdoor modular courses that are not recessed in the ground will have to provide an accessible route for at least 50 percent of the holes. The assessment assumes the additional cost for new modular courses will $5,000 per course.

*Alterations Impacts:* Minimal.

*Total Annual Compliance Costs:* $5.4 million.

Exercise Equipment, Bowling Lanes, and Shooting Facilities

*Existing Facilities:* 17,531 physical fitness facilities; 5,500 bowling centers; and 10,000 shooting facilities. No data on other facilities that provide exercise equipment.

*New Construction:* 800 to 1,000 new physical fitness facilities; 25 new bowling centers; and 100 new shooting facilities per year.

*Small Entities:* 99 percent of physical fitness facilities; and 100 percent of bowling centers and shooting facilities.

*New Construction Impacts:* Minimal.

*Alterations Impacts:* Minimal.

*Total Annual Compliance Costs:* Minimal.

Swimming Pools, Wading Pools, and Spas

*Existing Facilities:* 124,577 pools; no data on spas.

*New Construction:* 1,245 new pools per year; 565 new spas per year. The assessment assumes 715 new pools per year have less than 300 linear feet of pool wall and will need at least one means of accessible entry into the pool.

*Small Entities:* Ranges from 15 percent for private hospitals to 100 percent for camps and recreational vehicle parks.

*New Construction Impacts:* For new pools with less than 300 linear feet of pool wall, the assessment assumes that a pool lift will be provided ($4,000 unit cost). For pools with 300 linear feet or more of pool wall, the assessment assumes 250 of these new pools per year will provide an accessible means of entry in the absence of the final rule and will add a pool lift ($4,000 unit cost). The assessment assumes the other new pools with 300 linear feet or more of pool wall will provide a pool lift ($4,000 unit cost) and pool stairs ($2,500 unit cost). The impacts on wading pools will be minimal. The assessment assumes new spas will provide a pool lift ($4,000 unit cost).

*Alterations Impacts:* Minimal.

*Total Annual Compliance Costs:* $8.0 million.

*Regulatory Flexibility Act*

The final regulatory flexibility analysis has been performed in conjunction with the assessment of the benefits and costs of the final rule required by Executive Order 12866 and the preparation of the preamble for the final rule. The analysis is summarized below.

Need for and Objectives of Guidelines

The Access Board is required to issue accessibility guidelines under the Americans with Disabilities Act (ADA) to ensure that new construction and alterations of facilities covered by the law are readily accessible to and usable by individuals with disabilities. Recreation facilities are among the facilities covered by the ADA. Recreation facilities have unique features that are not adequately addressed by the Americans with Disabilities Act Accessibility Guidelines (ADAAG). The final rule will amend ADAAG to provide supplemental guidelines for making recreation facilities accessible.

Significant Issues Raised During Public Comment Period

The significant comments raised during the public comment period are summarized in the preamble to the final rule, along with the Access Board's assessment of the comments and the reason for selecting the alternative adopted in the final rule. The alternatives considered in the proposed rule and the final rule, and changes made from the proposed rule for each type of recreation facility are presented in the assessment of the benefits and costs of the final rule required by Executive Order 12866.

Numbers of Small Entities Affected by Final Rule

The numbers of small entities affected by the final rule are reported under the summary of the assessment of the benefits and costs of the final rule required by Executive Order 12866.

Reporting and Recordkeeping Requirements

There are no reporting and recordkeeping requirements.

Steps Taken To Minimize Significant Economic Impact on Small Entities

The Access Board has taken steps to minimize the significant economic impact on small entities for each of the different types of recreation facilities addressed in the final rule. These steps are listed below.

- *Amusement Rides*—The final rule allows designers and operators of new amusement rides the choice of providing at least one wheelchair space, or an amusement ride seat designed for transfer, or a transfer device. The final rule limits application of the guidelines to existing rides that are altered. The final rule also allows designers and operators greater flexibility in applying ADAAG to amusement rides.
- *Boating Facilities*—The final rule permits gangways that are part of an accessible route to exceed the 1:12 maximum slope requirement for ramps where the total length of the gangways is at least 80 feet (30 feet for smaller facilities with fewer than 25 boat slips). The final rule reduces the number of boat slips required to be accessible in new construction, and modifies the requirements for accessible boat slips in alterations so no more than one boat slip is lost. The final rule also allows designers and operators greater flexibility in applying ADAAG to boating facilities.
- *Fishing Piers and Platforms*—The final rule permits gangways that are part of an accessible route to exceed the maximum 1:12 requirement for ramps where the total length of the gangways is at least 30 feet. The final rule also exempts guards that comply with certain sections of the International Building Code from the maximum 34 inch height requirement.
- *Golf Courses*—The final rule permits a golf car passage to be provided on golf courses and driving ranges, instead of an accessible route.
- *Miniature Golf Courses*—The final rule requires at least 50 percent of holes on miniature golf courses to be accessible, and permits one break in the sequence of accessible holes provided the last hole in the sequence is the last hole on the course. The final rule also allows designers and operators greater flexibility in applying ADAAG to miniature golf courses.
- *Swimming Pools, Wading Pools, and Spas*—The final rule permits small pools with less than 300 linear feet of pool wall to provide at least one means of access into the water, and permits water play components to use transfer systems to connect elevated water play components.

Technical Assistance

The Access Board will provide technical assistance materials to help small entities understand the accessibility guidelines for recreation facilities. The Access Board also operates a toll-free technical assistance service to answer questions from the public about the guidelines.

*Executive Order 13132: Federalism*

The final rule adheres to the fundamental federalism principles and policy making criteria in Executive Order 13132. The final rule implements Federal civil rights legislation that was enacted pursuant to the Congress' authority to enforce the fourteenth amendment and to regulate commerce. Ensuring the civil rights of groups who have experienced irrational discrimination has long been recognized as a national issue and a proper function of the Federal government. The ADA was enacted ''to provide a clear and comprehensive national mandate for the elimination of discrimination against individuals with disabilities * * * and to ensure that the Federal government plays a central role in enforcing the standards established in this chapter on behalf of individuals with disabilities.'' 42 U.S.C. 12101(b)(1) and (3). The ADA recognizes the authority of State and local governments to enact and enforce laws that ''provide greater or equal protection for the rights of individuals with disabilities than are afforded by this chapter.'' 42 U.S.C. 12201(b). The final rule establishes minimum guidelines. States and local governments can adopt accessibility standards that provide individuals with

disabilities equal or greater access to recreation facilities.

The Access Board has consulted with State and local governments throughout the rulemaking process. The National Recreation and Park Association, States Organization for Boating Access, New Jersey Department of Community Affairs, San Francisco Department of Public Works, and the Hawaii Disability and Communication Access Board represented the interests of State and local governments on the Recreation Access Advisory Committee. State and local governments participated in the public hearings and information meetings held on the NPRM and the draft final rule, and submitted more than 70 comments. Most of the comments were centered on boating facilities. The California Department of Boating and Waterways, Oregon State Marine Board, and Michigan Department of Natural Resources were actively involved in providing information and alternative proposals for consideration during the rulemaking. Approximately 30 other State and local governments joined in supporting the various proposals submitted by those States.

*Unfunded Mandates Reform Act*

The Unfunded Mandates Reform Act does not apply to proposed or final rules that enforce constitutional rights of individuals or enforce any statutory rights that prohibit discrimination on the basis of race, color, sex, national origin, age, handicap, or disability. Since the final rule is issued under the authority of the Americans with Disabilities Act, an assessment of the rule's effects on State, local, and tribal governments, and the private sector is not required by the Unfunded Mandates Reform Act.

**List of Subjects in 36 CFR Part 1191**

Buildings and facilities, Civil rights, Incorporation by reference, Individuals with disabilities, Transportation.

**Thurman M. Davis, Sr.,**

*Chair, Architectural and Transportation Barriers Compliance Board.*

For the reasons stated in the preamble, part 1191 of title 36 of the Code of Federal Regulations is amended as follows:

## PART 1191—AMERICANS WITH DISABILITIES ACT (ADA) ACCESSIBILITY GUIDELINES FOR BUILDINGS AND FACILITIES

1. The authority citation for 36 CFR Part 1191 continues to read as follows:

**Authority:** 42 U.S.C. 12204.

2. Appendix A to Part 1191 is amended as follows:

a. By revising the title page and pages i, ii, 1A, 2, 3, 4, 4A, 5 through 11, 58A, and 76 through 81 as set forth below.

b. By removing the blank page following the title page.

c. By adding pages 4B, 11A, 58B, and 82 through 96 as set forth below.

d. In the appendix to Appendix A by revising pages A1, A1A, A16, and A22 through A25 and adding pages A1B, A16A, and A26 through A32 as set forth below.

The additions and revisions read as follows:

### Appendix A to Part 1191—Americans With Disabilities Act (ADA) Accessibility Guidelines for Buildings and Facilities

BILLING CODE 8150–01–P

# Americans with Disabilities Act (ADA)

# Accessibility Guidelines for Buildings and Facilities

**U.S. Architectural and Transportation Barriers Compliance Board (Access Board)**
**1331 F Street, N.W., Suite 1000**
**Washington, D.C. 20004-1111**
**(202) 272-0080**
**(202) 272-0082 TTY**
**(202) 272-0081 FAX**

# ADA ACCESSIBILITY GUIDELINES FOR BUILDINGS AND FACILITIES TABLE OF CONTENTS


**1. PURPOSE . . . . . 1**

**2. GENERAL . . . . . 1**

2.1 Provisions for Adults and Children . . . . . 1
2.2 Equivalent Facilitation . . . . . 1
2.3 Incorporation by Reference . . . . . 1A

**3. MISCELLANEOUS INSTRUCTIONS AND DEFINITIONS . . . . . 2**

3.1 Graphic Conventions . . . . . 2
3.2 Dimensional Tolerances . . . . . 2
3.3 Notes . . . . . 2
3.4 General Terminology . . . . . 2
3.5 Definitions . . . . . 2

**4. ACCESSIBLE ELEMENTS AND SPACES: SCOPE AND TECHNICAL REQUIREMENTS . . . . . 5**

4.1 Minimum Requirements . . . . . 5
4.1.1 Application . . . . . 5
4.1.2 Accessible Sites and Exterior Facilities: New Construction . . . . . 6
4.1.3 Accessible Buildings: New Construction . . . . . 7
4.1.4 (Reserved) . . . . . 11A
4.1.5 Accessible Buildings: Additions . . . . . 11A
4.1.6 Accessible Buildings: Alterations . . . . . 12
4.1.7 Accessible Buildings: Historic Preservation . . . . . 14
4.2 Space Allowance and Reach Ranges . . . . . 14A
4.3 Accessible Route . . . . . 15
4.4 Protruding Objects . . . . . 21
4.5 Ground and Floor Surfaces . . . . . 22
4.6 Parking and Passenger Loading Zones . . . . . 24
4.7 Curb Ramps . . . . . 26
4.8 Ramps . . . . . 27
4.9 Stairs . . . . . 30
4.10 Elevators . . . . . 30
4.11 Platform Lifts (Wheelchair Lifts) . . . . . 36
4.12 Windows . . . . . 36
4.13 Doors . . . . . 36
4.14 Entrances . . . . . 40
4.15 Drinking Fountains and Water Coolers . . . . . 40

4.16 Water Closets . . . . . 40
4.17 Toilet Stalls . . . . . 41A
4.18 Urinals . . . . . 44
4.19 Lavatories and Mirrors . . . . . 44A
4.20 Bathtubs . . . . . 45
4.21 Shower Stalls . . . . . 45
4.22 Toilet Rooms . . . . . 45
4.23 Bathrooms, Bathing Facilities, and Shower Rooms . . . . . 48
4.24 Sinks . . . . . 49
4.25 Storage . . . . . 49
4.26 Handrails, Grab Bars, and Tub and Shower Seats . . . . . 50
4.27 Controls and Operating Mechanisms . . . . . 51
4.28 Alarms . . . . . 52
4.29 Detectable Warnings . . . . . 53
4.30 Signage . . . . . 53
4.31 Telephones . . . . . 54
4.32 Fixed or Built-in Seating and Tables . . . . . 56
4.33 Assembly Areas . . . . . 56
4.34 Automated Teller Machines . . . . . 58
4.35 Dressing, Fitting, and Locker Rooms . . . . . 58A
4.36 Saunas and Steam Rooms . . . . . 58A
4.37 Benches . . . . . 58A

**5. RESTAURANTS AND CAFETERIAS . . . . . 59**

**6. MEDICAL CARE FACILITIES . . . . . 60**

**7. BUSINESS, MERCANTILE AND CIVIC . . . . . 61**

**8. LIBRARIES . . . . . 62**

**9. ACCESSIBLE TRANSIENT LODGING . . . . . 63**

**10. TRANSPORTATION FACILITIES . . . . . 67**

**11. JUDICIAL, LEGISLATIVE AND REGULATORY FACILITIES . . . . . 72**

**12. DETENTION AND CORRECTIONAL FACILITIES . . . . . 74**

**13. RESIDENTIAL HOUSING (Reserved) . . . . . 76**

**14. PUBLIC RIGHTS-OF-WAY (Reserved) . . . . . 76**

**15. RECREATION FACILITIES . . . . . 76**

**APPENDIX . . . . . A1**

**2.3 Incorporation by Reference**

**2.3 Incorporation by Reference.**

**2.3.1 General.** The publications listed in 2.3.2 are incorporated by reference in this document. The Director of the Federal Register has approved these materials for incorporation by reference in accordance with 5 U.S.C. 552(a) and 1 CFR part 51. Copies of the referenced publications may be inspected at the Architectural and Transportation Barriers Compliance Board, 1331 F Street, NW., Suite 1000, Washington, DC; at the Department of Justice, Civil Rights Division, Disability Rights Section, 1425 New York Avenue, NW., Washington, DC; or at the Office of the Federal Register, 800 North Capitol Street, NW., Suite 700, Washington, DC.

**2.3.2 Referenced Publications.** The specific edition of the publications listed below are referenced in this document. Where differences occur between this document and the referenced publications, this document applies.

**2.3.2.1 American Society for Testing and Materials (ASTM) Standards.** Copies of the referenced publications may be obtained from the American Society for Testing and Materials, 100 Bar Harbor Drive, West Conshohocken, Pennsylvania 19428 (http://www.astm.org).

ASTM F 1292-99 Standard Specification for Impact Attenuation of Surface Systems Under and Around Playground Equipment (see 15.6.7.2 Ground Surfaces, Use Zones).

ASTM F 1487-98 Standard Consumer Safety Performance Specification for Playground Equipment for Public Use (see 3.5 Definitions, Use Zone).

ASTM F 1951-99 Standard Specification for Determination of Accessibility of Surface Systems Under and Around Playground Equipment (see 15.6.7.1 Ground Surfaces, Accessibility).

**2.3.2.2 International Code Council (ICC) Codes.** Copies of the referenced publications may be obtained from the International Code Council, 5203 Leesburg Pike, Suite 600, Falls Church, VA 22041-3401 (http://www.intlcode.org).

International Building Code 2000 (see 15.3.3.2 Height).

# 3. MISCELLANEOUS INSTRUCTIONS AND DEFINITIONS.

**3.1 Graphic Conventions.** Graphic conventions are shown in Table 1. Dimensions that are not marked minimum or maximum are absolute, unless otherwise indicated in the text or captions.

**3.2 Dimensional Tolerances.** All dimensions are subject to conventional building industry tolerances for field conditions.

**3.3 Notes.** The text of these guidelines does not contain notes or footnotes. Additional information, explanations, and advisory materials are located in the Appendix.

**3.4 General Terminology.**

comply with. Meet one or more specifications of *these guidelines.*

if, if ... then. Denotes a specification that applies only when the conditions described are present.

may. Denotes an option or alternitive.

shall. Denotes a mandatory specification or requirement.

should. Denotes an advisory specification or recommendation.

**3.5 Definitions.**

**Access Aisle**. An accessible pedestrian space between elements, such as parking spaces, seating, and desks, that provides clearances appropriate for use of the elements.

**Accessible**. Describes a site, building, facility, or portion thereof that complies with *these guidelines.*

**Accessible Element**. An *element* specified by *these guidelines* (for example, telephone, controls, and the like).

**Accessible Route**. A continuous unobstructed path connecting all accessible elements and spaces of a building or facility. Interior accessible routes may include corridors, floors, ramps, elevators, lifts, and clear floor space at fixtures. Exterior accessible routes may include parking access aisles, curb ramps, *crosswalks at vehicular ways*, walks, ramps, and lifts.

**Accessible Space**. Space that complies with *these guidelines.*

**Adaptability**. The ability of certain building spaces and elements, such as kitchen counters, sinks, and grab bars, to be added or altered so as to accommodate the needs of *individuals with or without disabilities* or to accommodate the needs of persons with different types or degrees of disability.

**Addition**. *An expansion, extension, or increase in the gross floor area of a building or facility.*

**Administrative Authority**. A governmental agency that adopts or enforces regulations and *guidelines* for the design, construction, or *alteration* of buildings and facilities.

**Alteration**. *An alteration is a change to a building or facility that affects or could affect the usability of the building or facility or part thereof. Alterations include, but are not limited to, remodeling, renovation, rehabilitation, reconstruction, historic restoration, resurfacing of circulation paths or vehicular ways, changes or rearrangement of the structural parts or elements, and changes or rearrangement in the plan configuration of walls and full-height partitions. Normal maintenance, reroofing, painting or wallpapering, or changes to mechanical and electrical systems are not alterations unless they affect the usability of the building or facility.*

**Amusement Attraction**. *Any facility, or portion of a facility, located within an amusement park or theme park which provides amusement without*

*the use of an amusement device. Examples include, but are not limited to, fun houses, barrels, and other attractions without seats.*

**Amusement Ride**. *A system that moves persons through a fixed course within a defined area for the purpose of amusement.*

**Amusement Ride Seat**. *A seat that is built-in or mechanically fastened to an amusement ride intended to be occupied by one or more passengers.*

**Area of Rescue Assistance**. *An area, which has direct access to an exit, where people who are unable to use stairs may remain temporarily in safety to await further instructions or assistance during emergency evacuation.*

**Area of Sport Activity**. *That portion of a room or space where the play or practice of a sport occurs.*

**Assembly Area**. A room or space accommodating a *group of* individuals for recreational, educational, political, social, civic, or amusement purposes, or for the consumption of food and drink.

**Automatic Door**. A door equipped with a power-operated mechanism and controls that open and close the door automatically upon receipt of a momentary actuating signal. The switch that begins the automatic cycle may be a photoelectric device, floor mat, or manual switch (see power-assisted door).

**Boarding Pier**. *A portion of a pier where a boat is temporarily secured for the purpose of embarking or disembarking.*

**Boat Launch Ramp**. *A sloped surface designed for launching and retrieving trailered boats and other water craft to and from a body of water.*

**Boat Slip**. *That portion of a pier, main pier, finger pier, or float where a boat is moored for the purpose of berthing, embarking, or disembarking.*

**Building**. Any structure used and intended for supporting or sheltering any use or occupancy.

**Catch Pool**. *A pool or designated section of a pool used as a terminus for water slide flumes.*

**Circulation Path**. An exterior or interior way of passage from one place to another for pedestrians, including, but not limited to, walks, hallways, courtyards, stairways, and stair landings.

**Clear**. Unobstructed.

**Clear Floor Space**. *The minimum unobstructed floor or ground space required to accommodate a single, stationary wheelchair and occupant.*

**Closed Circuit Telephone**. *A telephone with dedicated line(s) such as a house phone, courtesy phone or phone that must be used to gain entrance to a facility.*

**Common Use**. Refers to those interior and exterior rooms, spaces, or elements that are made available for the use of a restricted group of people (for example, occupants of a homeless shelter, the occupants of an office building, or the guests of such occupants).

**Cross Slope**. The slope that is perpendicular to the direction of travel (see running slope).

**Curb Ramp**. A short ramp cutting through a curb or built up to it.

**Detectable Warning**. *A standardized surface feature built in or applied to walking surfaces or other elements to warn visually impaired people of hazards on a circulation path.*

**Egress, Means of**. *A continous and unobstructed way of exit travel from any point in a building or facility to a public way. A means of egress comprises vertical and horizontal travel and may include intervening room spaces, doorways, hallways, corridors, passageways, balconies, ramps, stairs, enclosures, lobbies, horizontal exits, courts and yards. An accessible means of egress is one that complies with these guidelines and does not include stairs, steps, or escalators. Areas of rescue assistance or evacuation elevators*

**3.5 Definitions**

*may be included as part of accessible means of egress.*

**Element**. *An architectural or mechanical component of a building, facility, space, or site, e.g., telephone, curb ramp, door, drinking fountain, seating, or water closet.*

**Elevated Play Component**. *A play component that is approached above or below grade and that is part of a composite play structure consisting of two or more play components attached or functionally linked to create an integrated unit providing more than one play activity.*

**Entrance**. *Any access point to a building or portion of a building or facility used for the purpose of entering. An entrance includes the approach walk, the vertical access leading to the entrance platform, the entrance platform itself, vestibules if provided, the entry door(s) or gate(s) and the hardware of the entry door(s) or gate(s).*

**Facility**. *All or any portion of buildings, structures, site improvements, complexes, equipment, roads, walks, passageways, parking lots, or other real or personal property located on a site.*

**Gangway**. *A variable-sloped pedestrian walkway that links a fixed structure or land with a floating structure. Gangways which connect to vessels are not included.*

**Golf Car Passage**. *A continuous passage on which a motorized golf car can operate.*

**Ground Floor**. *Any occupiable floor less than one story above or below grade with direct access to grade. A building or facility always has at least one ground floor and may have more than one ground floor as where a split level entrance has been provided or where a building is built into a hillside.*

**Ground Level Play Component**. *A play component that is approached and exited at the ground level.*

**Mezzanine or Mezzanine Floor**. *That portion of a story which is an intermediate floor level placed within the story and having occupiable space above and below its floor.*

**Marked Crossing**. A crosswalk or other identified path intended for pedestrian use in crossing a vehicular way.

**Multifamily Dwelling**. Any building containing more than two dwelling units.

**Occupiable**. *A room or enclosed space designed for human occupancy in which individuals congregate for amusement, educational or similar purposes, or in which occupants are engaged at labor, and which is equipped with means of egress, light, and ventilation.*

**Operable Part**. A part of a piece of equipment or appliance used to insert or withdraw objects, or to activate, deactivate, or adjust the equipment or appliance (for example, coin slot, push button, handle).

**Path of Travel**. (Reserved).

**Play Area**. *A portion of a site containing play components designed and constructed for children.*

**Play Component**. *An element intended to generate specific opportunities for play, socialization, or learning. Play components may be manufactured or natural, and may be stand alone or part of a composite play structure.*

**Power-assisted Door**. A door used *for human passage* with a mechanism that helps to open the door, or relieves the opening resistance of a door, upon the activation of a switch or a continued force applied to the door itself.

**Private Facility**. *A place of public accommodation or a commercial facility subject to title III of the ADA and 28 CFR part 36 or a transportation facility subject to title III of the ADA and 49 CFR 37.45.*

**Public Facility**. *A facility or portion of a facility constructed by, on behalf of, or for the use of a public entity subject to title II of the ADA and 28 CFR part 35 or to title II of the ADA and 49 CFR 37.41 or 37.43.*

**Public Use**. Describes interior or exterior rooms or spaces that are made available to the general public. Public use may be provided at a building or facility that is privately or publicly owned.

**Ramp**. A walking surface which has a running slope greater than 1:20.

**Running Slope**. The slope that is parallel to the direction of travel (see cross slope).

**Service Entrance**. An entrance intended primarily for delivery of goods or services.

**Signage**. *Displayed* verbal, symbolic, *tactile,* and pictorial information.

**Site**. A parcel of land bounded by a property line or a designated portion of a public right-of-way.

**Site Improvement**. Landscaping, paving for pedestrian and vehicular ways, outdoor lighting, recreational facilities, and the like, added to a site.

**Sleeping Accommodations**. Rooms in which people sleep; for example, dormitory and hotel or motel guest rooms or suites.

**Soft Contained Play Structure**. *A play structure made up of one or more components where the user enters a fully enclosed play environment that utilizes pliable materials (e.g., plastic, netting, fabric).*

**Space**. *A definable area, e.g., room, toilet room, hall, assembly area, entrance, storage room, alcove, courtyard, or lobby.*

**Story**. *That portion of a building included between the upper surface of a floor and upper surface of the floor or roof next above. If such portion of a building does not include occupiable space, it is not considered a story for purposes of these guidelines. There may be more than one floor level within a story as in the case of a mezzanine or mezzanines.*

**Structural Frame**. The structural frame shall be considered to be the columns and the girders, beams, trusses and spandrels having direct connections to the columns and all other members which are essential to the stability of the building as a whole.

**TDD**. *(Telecommunication Devices for the Deaf). See text telephone.*

**TTY (Tele-Typewriter)**. *See text telephone.*

**Tactile**. Describes an object that can be perceived using the sense of touch.

**Technically Infeasible**. *See 4.1.6(1)(j) EXCEPTION.*

**Teeing Ground**. *In golf, the starting place for the hole to be played.*

**Text Telephone (TTY)**. *Machinery or equipment that employs interactive text based communications through the transmission of coded signals accross the standard telephone network. Text telephones can include, for example, devices known as TDDs (telecommunication display devices or telecommunication devices for deaf persons) or computers with special modems. Text telephones are also called TTYs, an abbreviation for tele-typewriter.*

**Transient Lodging**.* *A building, facility, or portion thereof, excluding inpatient medical care facilities and residential facilities, that contains sleeping accommodations. Transient lodging may include, but is not limited to, resorts, group homes, hotels, motels, and dormitories.*

**Transfer Device**. *Equipment designed to facilitate the transfer of a person from a wheelchair or other mobility device to and from an amusement ride seat.*

**Transition Plate**. *A sloping pedestrian walking surface located at the end(s) of a gangway.*

**3.5 Definitions**

| | |
|---|---|
| **Use Zone**. *The ground level area beneath and immediately adjacent to a play structure or equipment that is designated by ASTM F 1487 Standard Consumer Safety Performance Specification for Playground Equipment for Public Use (incorporated by reference, see 2.3.2) for unrestricted circulation around the equipment and on whose surface it is predicted that a user would land when falling from or exiting the equipment.*<br><br>**Vehicular Way**. A route intended for vehicular traffic, such as a street, driveway, or parking lot.<br><br>**Walk**. An exterior pathway with a prepared surface intended for pedestrian use, including general pedestrian areas such as plazas and courts. | |

Note: Sections 4.1.1 through 4.1.7 are different from ANSI A117.1 in their entirety and are printed in standard type (ANSI A117.1 does not include scoping provisions).

# 4. ACCESSIBLE ELEMENTS AND SPACES: SCOPE AND TECHNICAL REQUIREMENTS.

## 4.1 Minimum Requirements

### 4.1.1* Application.

(1) General. All areas of newly designed or newly constructed buildings and facilities and altered portions of existing buildings and facilities shall comply with section 4, unless otherwise provided in this section or as modified in a special application section.

(2) Application Based on Building Use. Special application sections provide additional requirements based on building use. When a building or facility contains more than one use covered by a special application section, each portion shall comply with the requirements for that use.

(3)* Areas Used Only by Employees as Work Areas. Areas that are used only as work areas shall be designed and constructed so that individuals with disabilities can approach, enter, and exit the areas. These guidelines do not require that any areas used only as work areas be constructed to permit maneuvering within the work area or be constructed or equipped (i.e., with racks or shelves) to be accessible.

(4) Temporary Structures. These guidelines cover temporary buildings or facilities as well as permanent facilities. Temporary buildings and facilities are not of permanent construction but are extensively used or are essential for public use for a period of time. Examples of temporary buildings or facilities covered by these guidelines include, but are not limited to: reviewing stands, temporary classrooms, bleacher areas, exhibit areas, temporary banking facilities, temporary health screening services, or temporary safe pedestrian passageways around a construction site. Structures, sites and equipment directly associated with the actual processes of construction, such as scaffolding, bridging, materials hoists, or construction trailers are not included.

(5) General Exceptions.

(a) In new construction, a person or entity is not required to meet fully the requirements of these guidelines where that person or entity can demonstrate that it is structurally impracticable to do so. Full compliance will be considered structurally impracticable only in those rare circumstances when the unique characteristics of terrain prevent the incorporation of accessibility features. If full compliance with the requirements of these guidelines is structurally impracticable, a person or entity shall comply with the requirements to the extent it is not structurally impracticable. Any portion of the building or facility which can be made accessible shall comply to the extent that it is not structurally impracticable.

(b) Accessibility is not required to or in:

(i) raised areas used primarily for purposes of security or life or fire safety, including, but not limited to, observation or lookout galleries, prison guard towers, fire towers, or fixed life guard stands;

(ii) non-occupiable spaces accessed only by ladders, catwalks, crawl spaces, very narrow passageways, tunnels, or freight (non-passenger) elevators, and frequented only by service personnel for maintenance, repair, or occasional monitoring of equipment; such spaces may include, but are not limited to, elevator pits, elevator penthouses, piping or equipment catwalks, water or sewage treatment pump rooms and stations, electric substations and transformer vaults, and highway and tunnel utility facilities;

(iii) single occupant structures accessed only by a passageway that is below grade or that is

**4.1.2 Accessible Sites and Exterior Facilities: New Construction**

elevated above standard curb height, including, but not limited to, toll booths accessed from underground tunnels;

(iv) raised structures used solely for refereeing, judging, or scoring a sport;

(v) water slides;

(vi) animal containment areas that are not for public use; or

(vii) raised boxing or wrestling rings.

**4.1.2 Accessible Sites and Exterior Facilities: New Construction.** An accessible site shall meet the following minimum requirements:

(1) At least one accessible route complying with 4.3 shall be provided within the boundary of the site from public transportation stops, accessible parking spaces, passenger loading zones if provided, and public streets or sidewalks, to an accessible building entrance.

(2) (a) At least one accessible route complying with 4.3 shall connect accessible buildings, accessible facilities, accessible elements, and accessible spaces that are on the same site.

(b)* Court Sports: An accessible route complying with 4.3 shall directly connect both sides of the court in court sports.

(3) All objects that protrude from surfaces or posts into circulation paths shall comply with 4.4.

EXCEPTION: The requirements of 4.4 shall not apply within an area of sport activity.

(4) Ground surfaces along accessible routes and in accessible spaces shall comply with 4.5.

EXCEPTION 1*: The requirements of 4.5 shall not apply within an area of sport activity.

EXCEPTION 2*: Animal containment areas designed and constructed for public use shall not be required to provide stable, firm, and slip resistant ground and floor surfaces and shall not be required to comply with 4.5.2.

(5) (a) If parking spaces are provided for self-parking by employees or visitors, or both, then accessible spaces complying with 4.6 shall be provided in each such parking area in conformance with the table below. Spaces required by the table need not be provided in the particular lot. They may be provided in a different location if equivalent or greater accessibility, in terms of distance from an accessible entrance, cost and convenience is ensured.

| TOTAL PARKING IN LOT | REQUIRED MINIMUM NUMBER OF ACCESSIBLE SPACES |
|---|---|
| 1 to 25 | 1 |
| 26 to 50 | 2 |
| 51 to 75 | 3 |
| 76 to 100 | 4 |
| 101 to 150 | 5 |
| 151 to 200 | 6 |
| 201 to 300 | 7 |
| 301 to 400 | 8 |
| 401 to 500 | 9 |
| 501 to 1000 | 2 percent of total |
| 1001 and over | 20 plus 1 for each 100 over 1000 |

Except as provided in (b), access aisles adjacent to accessible spaces shall be 60 in (1525 mm) wide minimum.

(b) One in every eight accessible spaces, but not less than one, shall be served by an access aisle 96 in (2440 mm) wide minimum and shall be designated "van accessible" as required by 4.6.4. The vertical clearance at such spaces shall comply with 4.6.5. All such spaces may be grouped on one level of a parking structure.

EXCEPTION: Provision of all required parking spaces in conformance with "Universal Parking Design" (see appendix A4.6.3) is permitted.

(c) If passenger loading zones are provided, then at least one passenger loading zone shall comply with 4.6.6.

(d) At facilities providing medical care and other services for persons with mobility

impairments, parking spaces complying with 4.6 shall be provided in accordance with 4.1.2(5)(a) except as follows:

(i) Outpatient units and facilities: 10 percent of the total number of parking spaces provided serving each such outpatient unit or facility;

(ii) Units and facilities that specialize in treatment or services for persons with mobility impairments: 20 percent of the total number of parking spaces provided serving each such unit or facility.

(e)* Valet parking: Valet parking facilities shall provide a passenger loading zone complying with 4.6.6 located on an accessible route to the entrance of the facility. Paragraphs 5(a), 5(b), and 5(d) of this section do not apply to valet parking facilities.

(6) If toilet facilities are provided on a site, then each such public or common use toilet facility shall comply with 4.22. If bathing facilities are provided on a site, then each such public or common use bathing facility shall comply with 4.23.

For single user portable toilet or bathing units clustered at a single location, at least five percent but no less than one toilet unit or bathing unit complying with 4.22 or 4.23 shall be installed at each cluster whenever typical inaccessible units are provided. Accessible units shall be identified by the International Symbol of Accessibility.

EXCEPTION: Portable toilet units at construction sites used exclusively by construction personnel are not required to comply with 4.1.2(6).

(7) Building Signage. Signs which designate permanent rooms and spaces shall comply with 4.30.1, 4.30.4, 4.30.5 and 4.30.6. Other signs which provide direction to, or information about, functional spaces of the building shall comply with 4.30.1, 4.30.2, 4.30.3, and 4.30.5. Elements and spaces of accessible facilities which shall be identified by the International Symbol of Accessibility and which shall comply with 4.30.7 are:

(a) Parking spaces designated as reserved for individuals with disabilities;

(b) Accessible passenger loading zones;

(c) Accessible entrances when not all are accessible (inaccessible entrances shall have directional signage to indicate the route to the nearest accessible entrance);

(d) Accessible toilet and bathing facilities when not all are accessible.

**4.1.3 Accessible Buildings: New Construction.** Accessible buildings and facilities shall meet the following minimum requirements:

(1) (a) At least one accessible route complying with 4.3 shall connect accessible building or facility entrances with all accessible spaces and elements within the building or facility.

(b)* Court Sports: An accessible route complying with 4.3 shall directly connect both sides of the court in court sports.

(2) All objects that overhang or protrude into circulation paths shall comply with 4.4.

EXCEPTION: The requirements of 4.4 shall not apply within an area of sport activity.

(3) Ground and floor surfaces along accessible routes and in accessible rooms and spaces shall comply with 4.5.

EXCEPTION 1*: The requirements of 4.5 shall not apply within an area of sport activity.

EXCEPTION 2*: Animal containment areas designed and constructed for public use shall not be required to provide stable, firm, and slip resistant ground and floor surfaces and shall not be required to comply with 4.5.2.

(4) Interior and exterior stairs connecting levels that are not connected by an elevator, ramp, or

**4.1.3 Accessible Buildings: New Construction**

other accessible means of vertical access shall comply with 4.9.

(5)* One passenger elevator complying with 4.10 shall serve each level, including mezzanines, in all multi-story buildings and facilities unless exempted below. If more than one elevator is provided, each passenger elevator shall comply with 4.10.

EXCEPTION 1: Elevators are not required in:

(a) private facilities that are less than three stories or that have less than 3000 square feet per story unless the building is a shopping center, a shopping mall, or the professional office of a health care provider, or another type of facility as determined by the Attorney General; or

(b) public facilities that are less than three stories and that are not open to the general public if the story above or below the accessible ground floor houses no more than five persons and is less than 500 square feet. Examples may include, but are not limited to, drawbridge towers and boat traffic towers, lock and dam control stations, and train dispatching towers.

The elevator exemptions set forth in paragraphs (a) and (b) do not obviate or limit in any way the obligation to comply with the other accessibility requirements established in section 4.1.3. For example, floors above or below the accessible ground floor must meet the requirements of this section except for elevator service. If toilet or bathing facilities are provided on a level not served by an elevator, then toilet or bathing facilities must be provided on the accessible ground floor. In new construction, if a building or facility is eligible for exemption but a passenger elevator is nonetheless planned, that elevator shall meet the requirements of 4.10 and shall serve each level in the building. A passenger elevator that provides service from a garage to only one level of a building or facility is not required to serve other levels.

EXCEPTION 2: Elevator pits, elevator penthouses, mechanical rooms, piping or equipment catwalks are exempted from this requirement.

EXCEPTION 3: Accessible ramps complying with 4.8 may be used in lieu of an elevator.

EXCEPTION 4: Platform lifts (wheelchair lifts) complying with 4.11 of this guideline and applicable State or local codes may be used in lieu of an elevator only under the following conditions:

(a) To provide an accessible route to a performing area in an assembly occupancy.

(b) To comply with the wheelchair viewing position line-of- sight and dispersion requirements of 4.33.3.

(c) To provide access to incidental occupiable spaces and rooms which are not open to the general public and which house no more than five persons, including but not limited to equipment control rooms and projection booths.

(d) To provide access where existing site constraints or other constraints make use of a ramp or an elevator infeasible.

(e) To provide access to raised judges' benches, clerks' stations, speakers' platforms, jury boxes and witness stands or to depressed areas such as the well of a court.

(f)* To provide access to player seating areas serving an area of sport activity.

EXCEPTION 5: Elevators located in air traffic control towers are not required to serve the cab and the floor immediately below the cab.

(6) Windows: (Reserved).

(7) Doors:

(a) At each accessible entrance to a building or facility, at least one door shall comply with 4.13.

(b) Within a building or facility, at least one door at each accessible space shall comply with 4.13.

(c) Each door that is an element of an accessible route shall comply with 4.13.

(d) Each door required by 4.3.10, Egress, shall comply with 4.13.

(8)* The requirements in (a) and (b) below shall be satisfied independently:

(a)(i) At least 50 percent of all public entrances (excluding those in (b) below) shall comply with 4.14. At least one must be a ground floor entrance. Public entrances are any entrances that are not loading or service entrances.

(ii) Accessible public entrances must be provided in a number at least equivalent to the number of exits required by the applicable building or fire codes. (This paragraph does not require an increase in the total number of public entrances planned for a facility.)

(iii) An accessible public entrance must be provided to each tenancy in a facility (for example, individual stores in a strip shopping center).

(iv) In detention and correctional facilities subject to section 12, public entrances that are secured shall be accessible as required by 12.2.1.

One entrance may be considered as meeting more than one of the requirements in (a). Where feasible, accessible public entrances shall be the entrances used by the majority of people visiting or working in the building.

(b)(i) In addition, if direct access is provided for pedestrians from an enclosed parking garage to the building, at least one direct entrance from the garage to the building must be accessible.

(ii) If access is provided for pedestrians from a pedestrian tunnel or elevated walkway, one entrance to the building from each tunnel or walkway must be accessible.

(iii) In judicial, legislative, and regulatory facilities subject to section 11, restricted and secured entrances shall be accessible in the number required by 11.1.1.

One entrance may be considered as meeting more than one of the requirements in (b).

Because entrances also serve as emergency exits whose proximity to all parts of buildings and facilities is essential, it is preferable that all entrances be accessible.

(c) If the only entrance to a building, or tenancy in a facility, is a service entrance, that entrance shall be accessible.

(d) Entrances which are not accessible shall have directional signage complying with 4.30.1, 4.30.2, 4.30.3, and 4.30.5, which indicates the location of the nearest accessible entrance.

(9)* In buildings or facilities, or portions of buildings or facilities, required to be accessible, accessible means of egress shall be provided in the same number as required for exits by local building/life safety regulations. Where a required exit from an occupiable level above or below a level of accessible exit discharge is not accessible, an area of rescue assistance shall be provided on each such level (in a number equal to that of inaccessible required exits). Areas of rescue assistance shall comply with 4.3.11. A horizontal exit, meeting the requirements of local building/life safety regulations, shall satisfy the requirement for an area of rescue assistance.

EXCEPTION: Areas of rescue assistance are not required in buildings or facilities having a supervised automatic sprinkler system.

(10)* Drinking Fountains:

(a) Where only one drinking fountain is provided on a floor there shall be a drinking fountain which is accessible to individuals who use wheelchairs in accordance with 4.15 and one accessible to those who have difficulty bending or stooping. (This can be accommodated by the use of a "hi-lo" fountain; by providing one fountain accessible to those who use wheelchairs and one fountain at a standard height convenient for those who have difficulty bending; by providing a fountain accessible under 4.15 and a water cooler; or by such other means as would achieve the required accessibility for each group on each floor.)

**4.1.3 Accessible Buildings: New Construction**

(b) Where more than one drinking fountain or water cooler is provided on a floor, 50% of those provided shall comply with 4.15 and shall be on an accessible route.

(11) Toilet Facilities: If toilet rooms are provided, then each public and common use toilet room shall comply with 4.22. Other toilet rooms provided for the use of occupants of specific spaces (i.e., a private toilet room for the occupant of a private office) shall be adaptable. If bathing rooms are provided, then each public and common use bathroom shall comply with 4.23. Accessible toilet rooms and bathing facilities shall be on an accessible route.

(12) Storage, Shelving and Display Units:

(a) If fixed or built-in storage facilities such as cabinets, shelves, closets, and drawers are provided in accessible spaces, at least one of each type provided shall contain storage space complying with 4.25. Additional storage may be provided outside of the dimensions required by 4.25.

(b) Shelves or display units allowing self-service by customers in mercantile occupancies shall be located on an accessible route complying with 4.3. Requirements for accessible reach range do not apply.

(c)* Where lockers are provided in accessible spaces, at least 5 percent, but not less than one, of each type of locker shall comply with 4.25.

(13) Controls and operating mechanisms in accessible spaces, along accessible routes, or as parts of accessible elements (for example, light switches and dispenser controls) shall comply with 4.27.

EXCEPTION: The requirements of 4.27 shall not apply to exercise machines.

(14) If emergency warning systems are provided, then they shall include both audible alarms and visual alarms complying with 4.28. Sleeping accommodations required to comply with 9.3 shall have an alarm system complying with 4.28. Emergency warning systems in medical care facilities may be modified to suit standard health care alarm design practice.

(15) Detectable warnings shall be provided at locations as specified in 4.29.

(16) Building Signage:

(a) Signs which designate permanent rooms and spaces shall comply with 4.30.1, 4.30.4, 4.30.5 and 4.30.6.

(b) Other signs which provide direction to or information about functional spaces of the building shall comply with 4.30.1, 4.30.2, 4.30.3, and 4.30.5.

EXCEPTION: Building directories, menus, and all other signs which are temporary are not required to comply.

(17) Public Telephones:

(a) If public pay telephones, public closed circuit telephones, or other public telephones are provided, then they shall comply with 4.31.2 through 4.31.8 to the extent required by the following table:

| Number of each type of telephone provided on each floor | Number of telephones required to comply with 4.31.2 through 4.31.8[1] |
|---|---|
| 1 or more single unit | 1 per floor |
| 1 bank[2] | 1 per floor |
| 2 or more banks[2] | 1 per bank. Accessible unit may be installed as a single unit in proximity (either visible or with signage) to the bank. At least one public telephone per floor shall meet the requirements for a forward reach telephone[3] |

[1] Additional public telephones may be installed at any height. Unless otherwise specified, accessible

telephones may be either forward or side reach telephones.

[2] A bank consists of two or more adjacent public telephones, often installed as a unit.

[3] EXCEPTION: For exterior installations only, if dial tone first service is available, then a side reach telephone may be installed instead of the required forward reach telephone.

(b)* All telephones required to be accessible and complying with 4.31.2 through 4.31.8 shall be equipped with a volume control. In addition, 25 percent, but never less than one, of all other public telephones provided shall be equipped with a volume control and shall be dispersed among all types of public telephones, including closed circuit telephones, throughout the building or facility. Signage complying with applicable provisions of 4.30.7 shall be provided.

(c) The following shall be provided in accordance with 4.31.9:

(i) If four or more public pay telephones (including both interior and exterior telephones) are provided at a site of a private facility, and at least one is in an interior location, then at least one interior public text telephone (TTY) shall be provided. If an interior public pay telephone is provided in a public use area in a building of a public facility, at least one interior public text telephone (TTY) shall be provided in the building in a public use area.

(ii) If an interior public pay telephone is provided in a private facility that is a stadium or arena, a convention center, a hotel with a convention center, or a covered mall, at least one interior public text telephone (TTY) shall be provided in the facility. In stadiums, arenas and convention centers which are public facilities, at least one public text telephone (TTY) shall be provided on each floor level having at least one interior public pay telephone.

(iii) If a public pay telephone is located in or adjacent to a hospital emergency room, hospital recovery room, or hospital waiting room, one public text telephone (TTY) shall be provided at each such location.

(iv) If an interior public pay telephone is provided in the secured area of a detention or correctional facility subject to section 12, then at least one public text telephone (TTY) shall also be provided in at least one secured area. Secured areas are those areas used only by detainees or inmates and security personnel.

(d) Where a bank of telephones in the interior of a building consists of three or more public pay telephones, at least one public pay telephone in each such bank shall be equipped with a shelf and outlet in compliance with 4.31.9(2).

EXCEPTION: This requirement does not apply to the secured areas of detention or correctional facilities where shelves and outlets are prohibited for purposes of security or safety.

(18) If fixed or built-in seating or tables (including, but not limited to, study carrels and student laboratory stations), are provided in accessible public or common use areas, at least five percent (5%), but not less than one, of the fixed or built-in seating areas or tables shall comply with 4.32. An accessible route shall lead to and through such fixed or built-in seating areas, or tables.

(19)* Assembly Areas:

(a) In places of assembly with fixed seating accessible wheelchair locations shall comply with 4.33.2, 4.33.3, and 4.33.4 and shall be provided consistent with the following table:

| Capacity of Seating in Assembly Areas | Number of Required Wheelchair Locations |
|---|---|
| 4 to 25 | 1 |
| 26 to 50 | 2 |
| 51 to 300 | 4 |
| 301 to 500 | 6 |
| over 500 | 6 plus 1 additional space for each total seating capacity increase of 100 |

**4.1.5 Accessible Buildings: Additions**

In addition, one percent, but not less than one, of all fixed seats shall be aisle seats with no armrests on the aisle side, or removable or folding armrests on the aisle side. Each such seat shall be identified by a sign or marker. Signage notifying patrons of the availability of such seats shall be posted at the ticket office. Aisle seats are not required to comply with 4.33.4.

(b) This paragraph applies to assembly areas where audible communications are integral to the use of the space (e.g., concert and lecture halls, playhouses and movie theaters, meeting rooms, etc.). Such assembly areas, if (1) they accommodate at least 50 persons, or if they have audio-amplification systems, and (2) they have fixed seating, shall have a permanently installed assistive listening system complying with 4.33. For other assembly areas, a permanently installed assistive listening system, or an adequate number of electrical outlets or other supplementary wiring necessary to support a portable assistive listening system shall be provided. The minimum number of receivers to be provided shall be equal to 4 percent of the total number of seats, but in no case less than two. Signage complying with applicable provisions of 4.30 shall be installed to notify patrons of the availability of a listening system.

(c) Where a team or player seating area contains fixed seats and serves an area of sport activity, the seating area shall contain the number of wheelchair spaces required by 4.1.3(19)(a), but not less than one wheelchair space. Wheelchair spaces shall comply with 4.33.2, 4.33.3, 4.33.4, and 4.33.5.

EXCEPTION 1: Wheelchair spaces in team or player seating areas shall not be required to provide a choice of admission price or lines of sight comparable to those for members of the general public.

EXCEPTION 2: This provision shall not apply to team or player seating areas serving bowling lanes not required to be accessible by 15.7.2.

(20) Where automated teller machines (ATMs) are provided, each ATM shall comply with the requirements of 4.34 except where two or more are provided at a location, then only one must comply.

EXCEPTION: Drive-up-only automated teller machines are not required to comply with 4.27.2, 4.27.3 and 4.34.3.

(21) Where dressing, fitting, or locker rooms are provided, the rooms shall comply with 4.35.

EXCEPTION: Where dressing, fitting, or locker rooms are provided in a cluster, at least 5 percent, but not less than one, of the rooms for each type of use in each cluster shall comply with 4.35.

(22) Where saunas or steam rooms are provided, the rooms shall comply with 4.36.

EXCEPTION: Where saunas or steam rooms are provided in a cluster, at least 5 percent, but not less than one, of the rooms for each type of use in each cluster shall comply with 4.36.

**4.1.4** (Reserved)

**4.1.5 Accessible Buildings: Additions.** Each addition to an existing building or facility shall be regarded as an alteration. Each space or element added to the existing building or facility shall comply with the applicable provisions of 4.1.1 to 4.1.3, Minimum Requirements (for New Construction) and the applicable technical specifications of section 4 and the special application sections. Each addition that affects or could affect the usability of an area containing a primary function shall comply with 4.1.6(2).

***4.34.5 Equipment for Persons with Vision Impairments.*** *Instructions and all information for use shall be made accessible to and independently usable by persons with vision impairments.*

***4.35 Dressing, Fitting, and Locker Rooms.***

***4.35.1 General.*** *Dressing, fitting, and locker rooms required to be accessible by 4.1 shall comply with 4.35 and shall be on an accessible route.*

***4.35.2 Clear Floor Space.*** *A clear floor space allowing a person using a wheelchair to make a 180-degree turn shall be provided in every accessible dressing room entered through a swinging or sliding door. No door shall swing into any part of the turning space. Turning space shall not be required in a private dressing room entered through a curtained opening at least 32 in (815 mm) wide if clear floor space complying with section 4.2 renders the dressing room usable by a person using a wheelchair.*

***4.35.3 Doors.*** *All doors to accessible dressing rooms shall be in compliance with section 4.13.*

***4.35.4 Bench.*** *A bench complying with 4.37 shall be provided within the room.*

***4.35.5 Mirror.*** *Where mirrors are provided in dressing rooms of the same use, then in an accessible dressing room, a full-length mirror, measuring at least 18 in wide by 54 in high (460 mm by 1370 mm), shall be mounted in a position affording a view to a person on the bench as well as to a person in a standing position.*

***4.36 Saunas and Steam Rooms.***

***4.36.1 General.*** *Saunas and steam rooms required to be accessible by 4.1 shall comply with 4.36.*

***4.36.2* Wheelchair Turning Space.*** *A wheelchair turning space complying with 4.2.3 shall be provided within the room.*

*EXCEPTION: Wheelchair turning space shall be permitted to be obstructed by readily removable seats.*

***4.36.3 Sauna and Steam Room Bench.*** *Where seating is provided, at least one bench shall be provided and shall comply with 4.37.*

***4.36.4 Door Swing.*** *Doors shall not swing into any part of the clear floor or ground space required at a bench complying with 4.37.*

***4.37 Benches.***

***4.37.1 General.*** *Benches required to be accessible by 4.1 shall comply with 4.37.*

***4.37.2 Clear Floor or Ground Space.*** *Clear floor or ground space complying with 4.2.4 shall be provided and shall be positioned for parallel approach to a short end of a bench seat.*

*EXCEPTION: Clear floor or ground space required by 4.37.2 shall be permitted to be obstructed by readily removable seats in saunas and steam rooms.*

***4.37.3* Size.*** *Benches shall be fixed and shall have seats that are 20 inches (510 mm) minimum to 24 inches (610 mm) maximum in depth and 42 inches (1065 mm) minimum in length (see Fig. 47).*

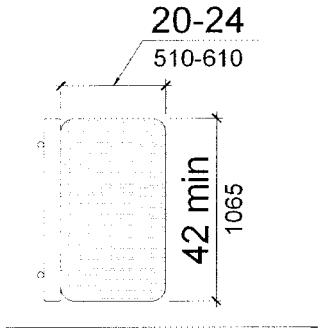


Fig. 47
Size of Bench

**4.37 Benches**

***4.37.4 Back Support.*** *Benches shall have back support that is 42 inches (1065 mm) minimum in length and that extends from a point 2 inches (51 mm) maximum above the seat to a point 18 inches (455 mm) minimum above the seat (see Fig. 48).*

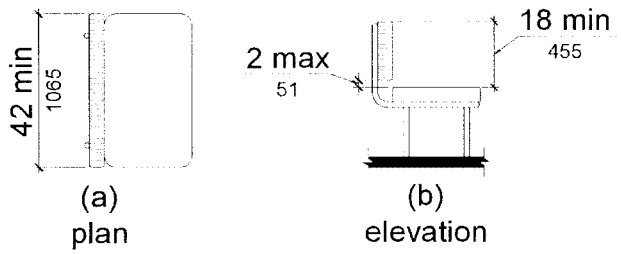


Fig. 48
Bench Back Support

***4.37.5 Seat Height.*** *Bench seats shall be 17 inches (430 mm) minimum to 19 inches (485 mm) maximum above the floor or ground.*

***4.37.6 Structural Strength.*** *Allowable stresses shall not be exceeded for materials used when a vertical or horizontal force of 250 lbs. (1112 N) is applied at any point on the seat, fastener, mounting device, or supporting structure.*

***4.37.7 Wet Locations.*** *The surface of benches installed in wet locations shall be slip-resistant and shall not accumulate water.*

back support (e.g., attachment to wall). The structural strength of the bench attachments shall comply with 4.26.3.

(7) Storage. Fixed or built-in storage facilities, such as cabinets, shelves, closets, and drawers, shall contain storage space complying with 4.25.

(8) Controls. All controls intended for operation by inmates shall comply with 4.27.

(9) Accommodations for persons with hearing impairments required by 12.4.3 and complying with 12.6 shall be provided in accessible cells or rooms.

**12.6 Visible Alarms and Telephones.** Where audible emergency warning systems are provided to serve the occupants of holding or housing cells or rooms, visual alarms complying with 4.28.4 shall be provided. Where permanently installed telephones are provided within holding or housing cells or rooms, they shall have volume controls complying with 4.31.5.

EXCEPTION: Visual alarms are not required where inmates or detainees are not allowed independent means of egress.

## 13. RESIDENTIAL HOUSING. (Reserved).

## 14. PUBLIC RIGHTS-OF-WAY. (Reserved).

## 15. RECREATION FACILITIES.

Newly designed or newly constructed and altered recreation facilities shall comply with the applicable requirements of section 4 and the special application sections, except as modified or otherwise provided in this section.

**15.1* Amusement Rides.**

**15.1.1 General.** Newly designed or newly constructed and altered amusement rides shall comply with 15.1.

EXCEPTION 1*: Mobile or portable amusement rides shall not be required to comply with 15.1.

EXCEPTION 2*: Amusement rides which are controlled or operated by the rider shall be required to comply only with 15.1.4 and 15.1.5.

EXCEPTION 3*: Amusement rides designed primarily for children, where children are assisted on and off the ride by an adult, shall be required to comply only with 15.1.4 and 15.1.5.

EXCEPTION 4: Amusement rides without amusement ride seats shall be required to comply only with 15.1.4 and 15.1.5.

**15.1.2* Alterations to Amusement Rides.** A modification to an existing amusement ride is an alteration subject to 15.1 if one or more of the following conditions apply:

(1) The amusement ride's structural or operational characteristics are changed to the extent that the ride's performance differs from that specified by the manufacturer or the original design criteria; or

(2) The load and unload area of the amusement ride is newly designed and constructed.

**15.1.3 Number Required.** Each amusement ride shall provide at least one wheelchair space complying with 15.1.7, or at least one amusement ride seat designed for transfer complying with 15.1.8, or at least one transfer device complying with 15.1.9.

**15.1.4* Accessible Route.** When in the load and unload position, amusement rides required to comply with 15.1 shall be served by an accessible route complying with 4.3. Any part of an accessible route serving amusement rides with a slope greater than 1:20 shall be considered a ramp and shall comply with 4.8.

EXCEPTION 1: The maximum slope specified in 4.8.2 shall not apply in the load and unload areas or on the amusement ride where compliance is structurally or operationally infeasible, provided that the slope of the ramp shall not exceed 1:8.

EXCEPTION 2: Handrails shall not be required in the load and unload areas or on the amusement ride where compliance is structurally or operationally infeasible.

EXCEPTION 3: Limited-use/limited-application elevators and platform lifts complying with 4.11 shall be permitted to be part of an accessible route serving the load and unload area.

**15.1.5 Load and Unload Areas.** Load and unload areas serving amusement rides required to comply with 15.1 shall provide a maneuvering space complying with 4.2.3. The maneuvering space shall have a slope not steeper than 1:48.

**15.1.6 Signage.** Signage shall be provided at the entrance of the queue or waiting line for each amusement ride to identify the type of access provided. Where an accessible unload area also serves as the accessible load area, signage shall be provided at the entrance to the queue or waiting line indicating the location of the accessible load and unload area.

**15.1.7 Amusement Rides with Wheelchair Spaces.** Amusement rides with wheelchair spaces shall comply with 15.1.7.

**15.1.7.1 Floor or Ground Surface.** The floor or ground surface of wheelchair spaces shall comply with 15.1.7.1.

**15.1.7.1.1 Slope.** The floor or ground surface of wheelchair spaces shall have a slope not steeper than 1:48 when in the load and unload position and shall be stable and firm.

**15.1.7.1.2* Gaps.** Floors of amusement rides with wheelchair spaces and floors of load and unload areas shall be coordinated so that, when the amusement rides are at rest in the load and unload position, the vertical difference between the floors shall be within plus or minus 5/8 inches (16 mm) and the horizontal gap shall be no greater than 3 inches (75 mm) under normal passenger load conditions.

EXCEPTION: Where compliance is not operationally or structurally feasible, ramps, bridge plates, or similar devices complying with the applicable requirements of 36 CFR 1192.83(c) shall be provided.

**15.1.7.2 Clearances.** Clearances for wheelchair spaces shall comply with 15.1.7.2.

EXCEPTION 1: Where provided, securement devices shall be permitted to overlap required clearances.

EXCEPTION 2: Wheelchair spaces shall be permitted to be mechanically or manually repositioned.

EXCEPTION 3*: Wheelchair spaces shall not be required to comply with 4.4.2.

**15.1.7.2.1 Width and Length.** Wheelchair spaces shall provide a clear width of 30 inches (760 mm) minimum and a clear length of 48 inches (1220 mm) minimum measured to 9 inches (230 mm) minimum above the floor surface.

**15.1.7.2.2* Wheelchair Spaces - Side Entry.** Where the wheelchair space can be entered only from the side, the ride shall be designed to permit sufficient maneuvering space for individuals using a wheelchair or mobility device to enter and exit the ride.

**15.1.7.2.3 Protrusions in Wheelchair Spaces.** Objects are permitted to protrude a distance of 6 inches (150 mm) maximum along the front of the wheelchair space where located 9 inches (230 mm) minimum and 27 inches (685 mm) maximum above the floor or ground surface of the wheelchair space. Objects are permitted to protrude a distance of 25 inches (635 mm) maximum along the front of the wheelchair space, where located more than 27 inches (685 mm) above the floor or ground surface of the wheelchair space (see Fig. 58).

**15.1 Amusement Rides**

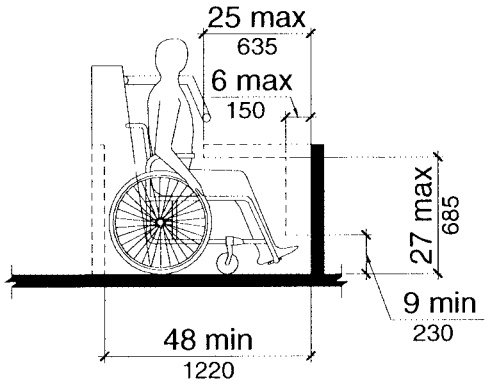


Fig. 58
Protrusions in Wheelchair Spaces

**15.1.7.3 Openings.** Where openings are provided to access wheelchair spaces on amusement rides, the entry shall provide a 32 inch (815 mm) minimum clear opening.

**15.1.7.4 Approach.** One side of the wheelchair space shall adjoin an accessible route.

**15.1.7.5 Companion Seats.** Where the interior width of the amusement ride is greater than 53 inches (1346 mm), seating is provided for more than one rider, and the wheelchair is not required to be centered within the amusement ride, a companion seat shall be provided for each wheelchair space.

**15.1.7.5.1 Shoulder-to-Shoulder Seating.** Where an amusement ride provides shoulder-to-shoulder seating, companion seats shall be shoulder-to-shoulder with the adjacent wheelchair space.

EXCEPTION: Where shoulder-to-shoulder companion seating is not operationally or structurally feasible, compliance with this provision shall be required to the maximum extent feasible.

**15.1.8* Amusement Ride Seats Designed for Transfer.** Amusement ride seats designed for transfer shall comply with 15.1.8 when positioned for loading and unloading.

**15.1.8.1 Clear Floor or Ground Space.** Clear floor or ground space complying with 4.2.4 shall be provided in the load and unload area adjacent to the amusement ride seats designed for transfer.

**15.1.8.2 Transfer Height.** The height of the amusement ride seats shall be 14 inches (355 mm) minimum to 24 inches (610mm) maximum measured above the load and unload surface.

**15.1.8.3 Transfer Entry.** Where openings are provided to transfer to amusement ride seats, the space shall be designed to provide clearance for transfer from a wheelchair or mobility device to the amusement ride seat.

**15.1.8.4 Wheelchair Storage Space.** Wheelchair storage spaces complying with 4.2.4 shall be provided in or adjacent to unload areas for each required amusement ride seat designed for transfer and shall not overlap any required means of egress or accessible route.

**15.1.9* Transfer Devices for Use with Amusement Rides.** Transfer devices for use with amusement rides shall comply with 15.1.9 when positioned for loading and unloading.

**15.1.9.1 Clear Floor or Ground Space.** Clear floor or ground space complying with 4.2.4 shall be provided in the load and unload area adjacent to the transfer devices.

**15.1.9.2 Transfer Height.** The height of the transfer device seats shall be 14 inches (355 mm) minimum to 24 inches (610 mm) maximum measured above the load and unload surface.

**15.1.9.3 Wheelchair Storage Space.** Wheelchair storage spaces complying with 4.2.4 shall be provided in or adjacent to unload areas for each required transfer device and shall not overlap any required means of egress or accessible route.

**15.2 Boating Facilities.**

**15.2.1 General.** Newly designed or newly constructed and altered boating facilities shall comply with 15.2.

**15.2.2* Accessible Route.** Accessible routes, including gangways that are part of accessible routes, shall comply with 4.3.

EXCEPTION 1: Where an existing gangway or series of gangways is replaced or altered, an increase in the length of the gangway is not required to comply with 15.2.2, unless required by 4.1.6(2).

EXCEPTION 2: The maximum rise specified in 4.8.2 shall not apply to gangways.

EXCEPTION 3: Where the total length of the gangway or series of gangways serving as part of a required accessible route is at least 80 feet (24 m), the maximum slope specified in 4.8.2 shall not apply to the gangways.

EXCEPTION 4: In facilities containing fewer than 25 boat slips and where the total length of the gangways or series of gangways serving as part of a required accessible route is at least 30 feet (9140 mm), the maximum slope specified in 4.8.2 shall not apply to the gangways.

EXCEPTION 5: Where gangways connect to transition plates, landings specified by 4.8.4 shall not be required.

EXCEPTION 6: Where gangways and transition plates connect and are required to have handrails, handrail extensions specified by 4.8.5 shall not be required. Where handrail extensions are provided on gangways or transition plates, such extensions are not required to be parallel with the ground or floor surface.

EXCEPTION 7: The cross slope of gangways, transition plates, and floating piers that are part of an accessible route shall be 1:50 maximum measured in the static position.

EXCEPTION 8: Limited-use/limited-application elevators or platform lifts complying with 4.11 shall be permitted in lieu of gangways complying with 4.3.

**15.2.3* Boat Slips: Minimum Number.** Where boat slips are provided, boat slips complying with 15.2.5 shall be provided in accordance with Table 15.2.3. Where the number of boat slips is not identified, each 40 feet (12 m) of boat slip edge provided along the perimeter of the pier shall be counted as one boat slip for the purpose of this section.

**Table 15.2.3**

| Total Boat Slips in Facility | Minimum Number of Required Accessible Boat Slips |
|---|---|
| 1 to 25 | 1 |
| 26 to 50 | 2 |
| 51 to 100 | 3 |
| 101 to 150 | 4 |
| 151 to 300 | 5 |
| 301 to 400 | 6 |
| 401 to 500 | 7 |
| 501 to 600 | 8 |
| 601 to 700 | 9 |
| 701 to 800 | 10 |
| 801 to 900 | 11 |
| 901 to 1000 | 12 |
| 1001 and over | 12 plus 1 for each 100 or fraction thereof over 1000 |

**15.2.3.1* Dispersion.** Accessible boat slips shall be dispersed throughout the various types of slips provided. This provision does not require an increase in the minimum number of boat slips required to be accessible.

**15.2.4* Boarding Piers at Boat Launch Ramps.** Where boarding piers are provided at boat launch ramps, at least 5 percent, but not less than one of the boarding piers shall comply with 15.2.4 and shall be served by an accessible route complying with 4.3.

**15.2 Boating Facilities**

EXCEPTION 1: Accessible routes serving floating boarding piers shall be permitted to use exceptions 1, 2, 5, 6, 7, and 8 in 15.2.2.

EXCEPTION 2: Where the total length of the gangway or series of gangways serving as part of a required accessible route is at least 30 feet (9140 mm), the maximum slope specified by 4.8.2 shall not apply to the gangways.

EXCEPTION 3: Where the accessible route serving a floating boarding pier or skid pier is located within a boat launch ramp, the portion of the accessible route located within the boat launch ramp shall not be required to comply with 4.8.

**15.2.4.1* Boarding Pier Clearances.** The entire length of the piers shall comply with 15.2.5.

**15.2.5* Accessible Boat Slips.** Accessible boat slips shall comply with 15.2.5.

**15.2.5.1 Clearances.** Accessible boat slips shall be served by clear pier space 60 inches (1525 mm) wide minimum and at least as long as the accessible boat slips. Every 10 feet (3050 mm) maximum of linear pier edge serving the accessible boat slips shall contain at least one continuous clear opening 60 inches (1525 mm) minimum in width (see Fig. 59).

EXCEPTION 1: The width of the clear pier space shall be permitted to be 36 inches (915 mm) minimum for a length of 24 inches (610 mm) maximum, provided that multiple 36 inch (915 mm) wide segments are separated by segments that are 60 inches (1525 mm) minimum clear in width and 60 inches (1525 mm) minimum clear in length (see Fig. 60).

EXCEPTION 2: Edge protection 4 inches (100 mm) high maximum and 2 inches (51 mm) deep maximum shall be permitted at the continuous clear openings (see Fig. 61).

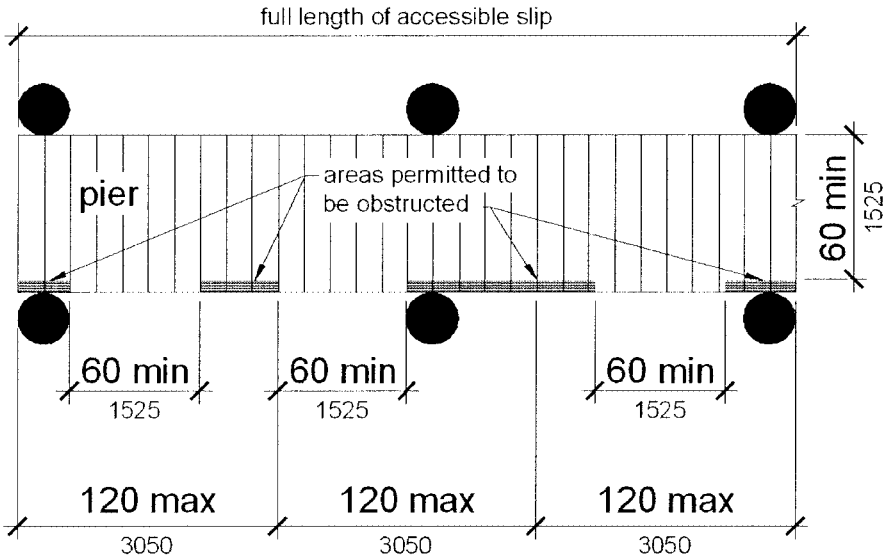


Fig. 59
Pier Clearances

EXCEPTION 3*: In alterations to existing facilities, clear pier space shall be permitted to be located perpendicular to the boat slip and shall extend the width of the boat slip, where the facility has at least one boat slip complying with 15.2.5, and further compliance with 15.2.5 would result in a reduction in the number of boat slips available or result in a reduction of the widths of existing slips.

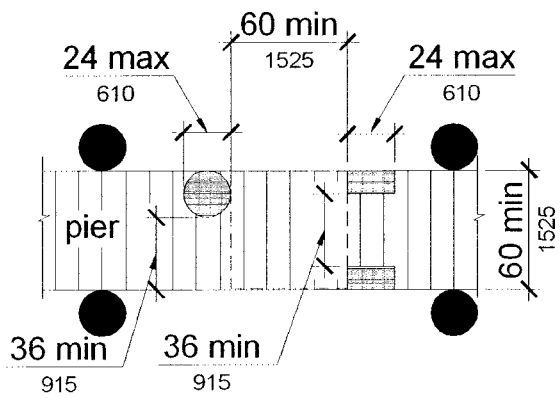


Fig. 60
Pier Clear Space Reduction

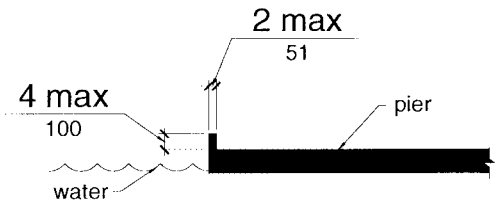


Fig. 61
Edge Protection at Pier

**15.2.5.2 Cleats and Other Boat Securement Devices.** Cleats and other boat securement devices shall not be required to comply with 4.27.3.

**15.3 Fishing Piers and Platforms.**

**15.3.1 General.** Newly designed or newly constructed and altered fishing piers and platforms shall comply with 15.3.

**15.3.2 Accessible Route.** Accessible routes, including gangways that are part of accessible routes, serving fishing piers and platforms shall comply with 4.3.

EXCEPTION 1: Accessible routes serving floating fishing piers and platforms shall be permitted to use exceptions 1, 2, 5, 6, 7,and 8 in 15.2.2.

EXCEPTION 2*: Where the total length of the gangway or series of gangways serving as part of a required accessible route is at least 30 feet (9140 mm), the maximum slope specified by 4.8.2 shall not apply to the gangways.

**15.3.3 Railings.** Where railings, guards, or handrails are provided, they shall comply with 15.3.3.

**15.3.3.1* Edge Protection.** Edge protection shall be provided and shall extend 2 inches (51 mm) minimum above the ground or deck surface.

EXCEPTION: Where the railing, guard, or handrail is 34 inches (865 mm) or less above the ground or deck surface, edge protection shall not be required if the deck surface extends 12 inches (305 mm) minimum beyond the inside face of the railing. Toe clearance shall be 9 inches (230 mm) minimum above the ground or deck surface beyond the railing. Toe clearance shall be 30 inches (760 mm) minimum wide (see Fig. 62).

**15.3.3.2 Height.** At least 25 percent of the railings, guards, or handrails shall be 34 inches (865 mm) maximum above the ground or deck surface.

EXCEPTION: This provision shall not apply to that portion of a fishing pier or platform where a guard which complies with sections 1003.2.12.1 (Height) and 1003.2.12.2 (Opening limitations) of the International Building Code (incorporated by reference, see 2.3.2) is provided.

**15.4 Golf**

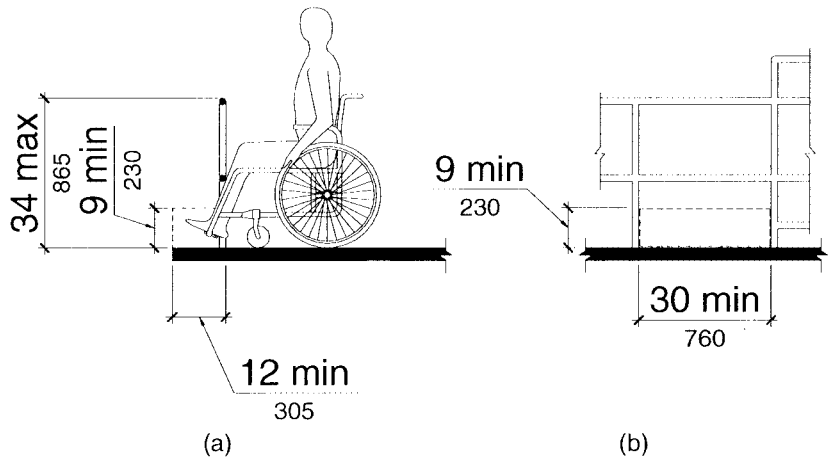


Fig. 62
Edge Protection at Fishing Piers

**15.3.3.3* Dispersion.** Railings required to comply with 15.3.3.2 shall be dispersed throughout a fishing pier or platform.

**15.3.4 Clear Floor or Ground Space.** At least one clear floor or ground space complying with 4.2.4 shall be provided where the railing height required by 15.3.3.2 is located. Where no railings are provided, at least one clear floor or ground space complying with 4.2.4 shall be provided.

**15.3.5 Maneuvering Space.** At least one maneuvering space complying with 4.2.3 shall be provided on the fishing pier or platform.

**15.4 Golf.**

**15.4.1 General.** Newly designed or newly constructed and altered golf courses, driving ranges, practice putting greens, and practice teeing grounds shall comply with 15.4.

**15.4.2* Accessible Route - Golf Course.** An accessible route shall connect accessible elements and spaces within the boundary of the golf course. In addition, an accessible route shall connect the golf car rental area, bag drop areas, practice putting greens, accessible practice teeing grounds, course toilet rooms, and course weather shelters. The accessible route required by this section shall be 48 inches (1220 mm) minimum wide. Where handrails are provided, the accessible route shall be 60 inches (1525 mm) minimum wide.

EXCEPTION 1: A golf car passage complying with 15.4.7 shall be permitted in lieu of all or part of an accessible route required by 15.4.2.

EXCEPTION 2: The handrail requirements of 4.8.5 shall not apply to an accessible route located within the boundary of a golf course.

**15.4.3* Accessible Route - Driving Ranges.** An accessible route shall connect accessible teeing stations at driving ranges with accessible parking spaces and shall be 48 inches (1220 mm) wide minimum. Where handrails are provided, the accessible route shall be 60 inches (1525 mm) wide minimum.

EXCEPTION: A golf car passage complying with 15.4.7 shall be permitted in lieu of all or part of an accessible route required by 15.4.3.

**15.4.4 Teeing Grounds.** Teeing grounds shall comply with 15.4.4.

**15.4.4.1 Number Required.** Where one or two teeing grounds are provided for a hole, at least one teeing ground serving the hole shall comply with 15.4.4.3. Where three or more teeing grounds are provided for a hole, at least two teeing grounds shall comply with 15.4.4.3.

**15.4.4.2 Forward Teeing Ground.** The forward teeing ground shall be accessible.

EXCEPTION: In alterations, the forward teeing ground shall not be required to be accessible where compliance is not feasible due to terrain.

**15.4.4.3 Teeing Grounds.** Teeing grounds required by 15.4.4.1 and 15.4.4.2 shall be designed and constructed so that a golf car can enter and exit the teeing ground.

**15.4.5 Teeing Stations at Driving Ranges and Practice Teeing Grounds.** Where teeing stations or practice teeing grounds are provided, at least 5 percent of the practice teeing stations or practice teeing grounds, but not less than one, shall comply with 15.4.4.3.

**15.4.6 Weather Shelters.** Where weather shelters are provided on a golf course, each weather shelter shall have a clear floor or ground space 60 inches (1525 mm) minimum by 96 inches (2440 mm) minimum and shall be designed and constructed so that a golf car can enter and exit.

**15.4.7 Golf Car Passage.** Where curbs or other constructed barriers are provided along a golf car passage to prohibit golf cars from entering a fairway, openings at least 60 inches (1525 mm) wide shall be provided at intervals not to exceed 75 yds (69 m).

**15.4.7.1 Width.** The golf car passage shall be 48 inches (1220 mm) minimum wide.

**15.4.8 Putting Greens.** Each putting green shall be designed and constructed so that a golf car can enter and exit the putting green.

**15.5* Miniature Golf.**

**15.5.1 General.** Newly designed or newly constructed and altered miniature golf courses shall comply with 15.5.

**15.5.2 Accessible Holes.** At least fifty percent of holes on a miniature golf course shall comply with 15.5.3 through 15.5.5 and shall be consecutive.

EXCEPTION: One break in the sequence of consecutive accessible holes shall be permitted, provided that the last hole on a miniature golf course is the last hole in the sequence.

**15.5.3* Accessible Route.** An accessible route complying with 4.3 shall connect the course entrance with the first accessible hole and the start of play area on each accessible hole. The course shall be configured to allow exit from the last accessible hole to the course exit or entrance and shall not require travel back through other holes.

**15.5.3.1 Accessible Route - Located On the Playing Surface.** Where the accessible route is located on the playing surface of the accessible hole, exceptions 1-5 shall be permitted.

EXCEPTION 1: Where carpet is provided, the requirements of 4.5.3 shall not apply.

EXCEPTION 2: Where the accessible route intersects the playing surface of a hole, a 1 inch (26 mm) maximum curb shall be permitted for a width of 32 inches (815 mm) minimum.

EXCEPTION 3: A slope of 1:4 maximum for a 4 inch (100 mm) maximum rise shall be permitted.

EXCEPTION 4: Landings required by 4.8.4 shall be permitted to be 48 inches (1220 mm) in length minimum. Landing size required by 4.8.4(3) shall be permitted to be 48 inches (1220 mm) minimum by 60 inches (1525 mm) minimum.

**15.6 Play Areas**

Landing slopes shall be permitted to be 1:20 maximum.

EXCEPTION 5: Handrail requirements of 4.8.5 shall not apply.

**15.5.3.2 Accessible Route - Adjacent to the Playing Surface.** Where the accessible route is located adjacent to the playing surface, the requirements of 4.3 shall apply.

**15.5.4 Start of Play Areas.** Start of play areas at holes required to comply with 15.5.2 shall have a slope not steeper than 1:48 and shall be 48 inches (1220 mm) minimum by 60 inches (1525 mm) minimum.

**15.5.5* Golf Club Reach Range.** All areas within accessible holes where golf balls rest shall be within 36 inches (915 mm) maximum of an accessible route having a maximum slope of 1:20 for 48 inches (1220 mm) in length (see Fig. 63).

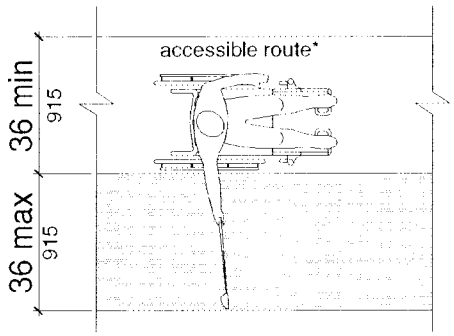


*Note: 1:20 maximum slope

Fig. 63
Golf Club Reach Range

**15.6 Play Areas.**

**15.6.1* General.** Newly designed and newly constructed play areas for children ages 2 and over and altered portions of existing play areas shall comply with the applicable provisions of section 4, except as modified or otherwise provided by this section. Where separate play areas are provided within a site for specified age groups, each play area shall comply with this section. Where play areas are designed or constructed in phases, this section shall be applied so that when each successive addition is completed, the entire play area complies with all the applicable provisions of this section.

EXCEPTION 1: Play areas located in family child care facilities where the proprietor actually resides shall not be required to comply with 15.6.

EXCEPTION 2: Where play components are relocated in existing play areas for the purpose of creating safe use zones, 15.6 shall not apply, provided that the ground surface is not changed or extended for more than one use zone.

EXCEPTION 3: Where play components are altered and the ground surface is not altered, the ground surface shall not be required to comply with 15.6.7, unless required by 4.1.6(2).

EXCEPTION 4: The provisions of 15.6.1 through 15.6.7 shall not apply to amusement attractions.

EXCEPTION 5: Compliance with 4.4 shall not be required within the boundary of the play area.

EXCEPTION 6: Stairs shall not be required to comply with 4.9.

**15.6.2* Ground Level Play Components.** Ground level play components shall be provided in the number and types required by 15.6.2.1 and 15.6.2.2. Ground level play components that are provided to comply with 15.6.2.1 shall be permitted to satisfy the number required by 15.6.2.2, provided that the minimum required types of play components are provided. Where more than one ground level play component required by 15.6.2.1 and 15.6.2.2 is provided, the play components shall be integrated in the play area.

**15.6.2.1 General.** Where ground level play components are provided, at least one of each type provided shall be located on an accessible route complying with 15.6.4 and shall comply with 15.6.6.

**15.6.2.2 Additional Number and Types.** Where elevated play components are provided, ground level play components shall be provided in accordance with Table 15.6.2.2. Ground level play components required by 15.6.2.2 shall be located on an accessible route complying with 15.6.4 and shall comply with 15.6.6.

EXCEPTION: If at least 50 percent of the elevated play components are connected by a ramp, and if at least 3 of the elevated play components connected by the ramp are different types of play components, 15.6.2.2 shall not apply.

**15.6.3* Elevated Play Components.** Where elevated play components are provided, at least 50 percent shall be located on an accessible route complying with 15.6.4. Elevated play components connected by a ramp shall comply with 15.6.6.

**15.6.4* Accessible Routes.** At least one accessible route complying with 4.3, as modified by 15.6.4, shall be provided.

EXCEPTION 1: Transfer systems complying with 15.6.5 shall be permitted to connect elevated play components, except where 20 or more elevated play components are provided, no more than 25 percent of the elevated play components shall be permitted to be connected by transfer systems.

EXCEPTION 2: Where transfer systems are provided, an elevated play component shall be permitted to connect to another elevated play component in lieu of an accessible route.

EXCEPTION 3: Platform lifts (wheelchair lifts) complying with 4.11 and applicable State or local codes shall be permitted to be used as part of an accessible route.

**Table 15.6.2.2 Number and Types of Ground Level Play Components Required to be on Accessible Route**

| Number of Elevated Play Components Provided | Minimum Number of Ground Level Play Components Required to be on Accessible Route | Minimum Number of Different Types of Ground Level Play Components Required to be on Accessible Route |
|---|---|---|
| 1 | Not applicable | Not applicable |
| 2 to 4 | 1 | 1 |
| 5 to 7 | 2 | 2 |
| 8 to 10 | 3 | 3 |
| 11 to 13 | 4 | 3 |
| 14 to 16 | 5 | 3 |
| 17 to 19 | 6 | 3 |
| 20 to 22 | 7 | 4 |
| 23 to 25 | 8 | 4 |
| More than 25 | 8 plus 1 for each additional 3 over 25, or fraction thereof | 5 |

**15.6 Play Areas**

**15.6.4.1 Location.** Accessible routes shall be located within the boundary of the play area and shall connect ground level play components as required by 15.6.2.1 and 15.6.2.2 and elevated play components as required by 15.6.3, including entry and exit points of the play components.

**15.6.4.2 Protrusions.** Objects shall not protrude into ground level accessible routes at or below 80 in (2030 mm) above the ground or floor surface.

**15.6.4.3 Clear Width.** The clear width of accessible routes within play areas shall comply with 15.6.4.3.

**15.6.4.3.1 Ground Level.** The clear width of accessible routes at ground level shall be 60 in (1525 mm) minimum.

EXCEPTION 1: In play areas less than 1,000 square feet, the clear width of accessible routes shall be permitted to be 44 in (1120 mm) minimum, provided that at least one turning space complying with 4.2.3 is provided where the restricted accessible route exceeds 30 feet (9.14 m) in length.

EXCEPTION 2: The clear width of accessible routes shall be permitted to be 36 in (915 mm) minimum for a distance of 60 in (1525 mm) maximum, provided that multiple reduced width segments are separated by segments that are 60 in (1525 mm) minimum in width and 60 in (1525 mm) minimum in length.

**15.6.4.3.2 Elevated.** The clear width of accessible routes connecting elevated play components shall be 36 in (915 mm).

EXCEPTION 1: The clear width of accessible routes connecting elevated play components shall be permitted to be reduced to 32 in (815 mm) minimum for a distance of 24 in (610 mm) maximum provided that reduced width segments are separated by segments that are 48 in (1220 mm) minimum in length and 36 in (915 mm) minimum in width.

EXCEPTION 2: The clear width of transfer systems connecting elevated play components shall be permitted to be 24 in (610 mm) minimum.

**15.6.4.4 Ramp Slope and Rise.** Any part of an accessible route with a slope greater than 1:20 shall be considered a ramp and shall comply with 4.8, as modified by 15.6.4.4.

**15.6.4.4.1 Ground Level.** The maximum slope for ramps connecting ground level play components within the boundary of a play area shall be 1:16.

**15.6.4.4.2 Elevated.** Where a ramp connects elevated play components, the maximum rise of any ramp run shall be 12 in (305 mm).

**15.6.4.5 Handrails.** Where required on ramps, handrails shall comply with 4.8.5, as modified by 15.6.4.5.

EXCEPTION 1: Handrails shall not be required at ramps located within ground level use zones.

EXCEPTION 2: Handrail extensions shall not be required.

**15.6.4.5.1 Handrail Gripping Surface.** Handrails shall have a diameter or width of 0.95 in (24.1 mm) minimum to 1.55 in (39.4 mm) maximum, or the shape shall provide an equivalent gripping surface.

**15.6.4.5.2 Handrail Height.** The top of handrail gripping surfaces shall be 20 in (510 mm) minimum to 28 in (710 mm) maximum above the ramp surface.

**15.6.5* Transfer Systems.** Where transfer systems are provided to connect elevated play components, the transfer systems shall comply with 15.6.5.

**15.6.5.1 Transfer Platforms.** Transfer platforms complying with 15.6.5.1 shall be provided where transfer is intended to be from a wheelchair or other mobility device (see Fig. 64).

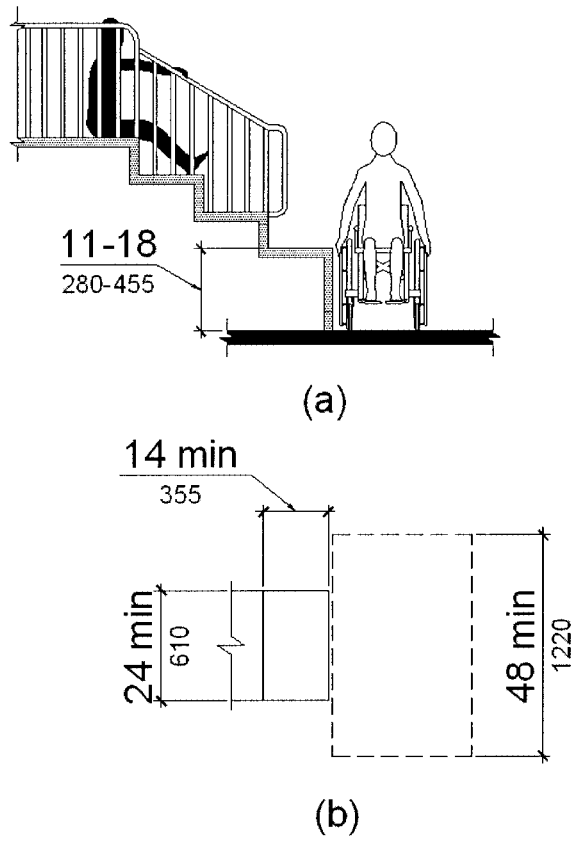


Fig. 64

**15.6.5.1.1 Size.** Platforms shall have a level surface 14 in (355 mm) minimum in depth and 24 in (610 mm) minimum in width.

**15.6.5.1.2 Height.** Platform surfaces shall be 11 in (280 mm) minimum to 18 in (455 mm) maximum above the ground or floor surface.

**15.6.5.1.3 Transfer Space.** A level space complying with 4.2.4 shall be centered on the 48 in (1220 mm) long dimension parallel to the 24 in (610 mm) minimum long unobstructed side of the transfer platform.

**15.6.5.1.4 Transfer Supports.** A means of support for transferring shall be provided.

**15.6.5.2 Transfer Steps.** Transfer steps complying with 15.6.5.2 shall be provided where movement is intended from a transfer platform to a level with elevated play components required to be located on an accessible route (see Fig. 65).

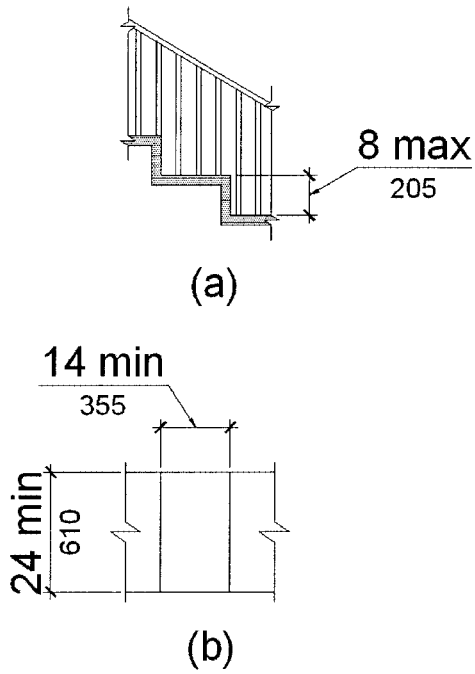


Fig. 65

**15.6.5.2.1 Size.** Transfer steps shall have a level surface 14 in (355 mm) minimum in depth and 24 in (610 mm) minimum in width.

**15.6.5.2.2 Height.** Each transfer step shall be 8 in (205 mm) maximum high.

**15.6.5.2.3 Transfer Supports.** A means of support for transferring shall be provided.

**15.6.6* Play Components.** Ground level play components located on accessible routes and

elevated play components connected by ramps shall comply with 15.6.6.

**15.6.6.1 Maneuvering Space.** Maneuvering space complying with 4.2.3 shall be provided on the same level as the play components. Maneuvering space shall have a slope not steeper than 1:48 in all directions. The maneuvering space required for a swing shall be located immediately adjacent to the swing.

**15.6.6.2 Clear Floor or Ground Space.** Clear floor or ground space shall be provided at the play components and shall be 30 in (760 mm) by 48 in (1220 mm) minimum. Clear floor or ground space shall have a slope not steeper than 1:48 in all directions.

**15.6.6.3 Play Tables: Height and Clearances.** Where play tables are provided, knee clearance 24 in (610 mm) high minimum, 17 in deep (430 mm) minimum, and 30 in (760 mm) wide minimum shall be provided. The tops of rims, curbs, or other obstructions shall be 31 in (785 mm) high maximum.

EXCEPTION: Play tables designed or constructed primarily for children ages 5 and under shall not be required to provide knee clearance if the clear floor or ground space required by 15.6.6.2 is arranged for a parallel approach and if the rim surface is 31 in (785 mm) high maximum.

**15.6.6.4 Entry Points and Seats: Height.** Where a play component requires transfer to the entry point or seat, the entry point or seat shall be 11 in (280 mm) minimum and 24 in (610 mm) maximum above the clear floor or ground space.

EXCEPTION: The entry point of a slide shall not be required to comply with 15.6.6.4.

**15.6.6.5 Transfer Supports.** Where a play component requires transfer to the entry point or seat, a means of support for transferring shall be provided.

**15.6.7* Ground Surfaces.** Ground surfaces along accessible routes, clear floor or ground spaces, and maneuvering spaces within play areas shall comply with 4.5.1 and 15.6.7.

**15.6.7.1 Accessibility.** Ground surfaces shall comply with ASTM F 1951 Standard Specification for Determination of Accessibility of Surface Systems Under and Around Playground Equipment (incorporated by reference, see 2.3.2). Ground surfaces shall be inspected and maintained regularly and frequently to ensure continued compliance with ASTM F 1951.

**15.6.7.2 Use Zones.** If located within use zones, ground surfaces shall comply with ASTM F 1292 Standard Specification for Impact Attenuation of Surface Systems Under and Around Playground Equipment (incorporated by reference, see 2.3.2).

**15.6.8 Soft Contained Play Structures.** Soft contained play structures shall comply with 15.6.8.

**15.6.8.1 Accessible Routes to Entry Points.** Where three or fewer entry points are provided, at least one entry point shall be located on an accessible route. Where four or more entry points are provided, at least two entry points shall be located on an accessible route. Accessible routes shall comply with 4.3.

EXCEPTION: Transfer systems complying with 15.6.5 or platform lifts (wheelchair lifts) complying with 4.11 and applicable State or local codes shall be permitted to be used as part of an accessible route.

**15.7 Exercise Equipment and Machines, Bowling Lanes, and Shooting Facilities.**

**15.7.1 General.** Newly designed or newly constructed and altered exercise equipment and machines, bowling lanes, and shooting facilities shall comply with 15.7.

**15.7.2* Exercise Equipment and Machines.** At least one of each type of exercise equipment and machines shall be provided with clear floor or ground space complying with 4.2.4 and shall be served by an accessible route. Clear floor or ground space shall be positioned for transfer or

for use by an individual seated in a wheelchair. Clear floor or ground spaces for more than one piece of equipment shall be permitted to overlap .

**15.7.3 Bowling Lanes.** Where bowling lanes are provided, at least 5 percent, but not less than one of each type of lane shall be served by an accessible route.

**15.7.4* Shooting Facilities.** Where fixed firing positions are provided at a site, at least 5 percent, but not less than one, of each type of firing position shall comply with 15.7.4.1.

**15.7.4.1 Fixed Firing Position.** Fixed firing positions shall contain a 60 inch (1525 mm) diameter space and shall have a slope not steeper than 1:48.

**15.8 Swimming Pools, Wading Pools, and Spas.**

**15.8.1 General.** Newly designed or newly constructed and altered swimming pools, wading pools, and spas shall comply with 15.8.

EXCEPTION: An accessible route shall not be required to serve raised diving boards or diving platforms.

**15.8.2* Swimming Pools.** At least two accessible means of entry shall be provided for each public use and common use swimming pool. The primary means of entry shall comply with 15.8.5 (Swimming Pool Lifts) or 15.8.6 (Sloped Entries). The secondary means of entry shall comply with one of the following: 15.8.5 (Swimming Pool Lifts), 15.8.6 (Sloped Entries), 15.8.7 (Transfer Walls), 15.8.8 (Transfer Systems), or 15.8.9 (Pool Stairs).

EXCEPTION 1*: Where a swimming pool has less than 300 linear feet (91 m) of swimming pool wall, at least one accessible means of entry shall be provided and shall comply with 15.8.5 (Swimming Pool Lifts) or 15.8.6 (Sloped Entries).

EXCEPTION 2: Wave action pools, leisure rivers, sand bottom pools, and other pools where user access is limited to one area, shall provide at least one accessible means of entry that complies with 15.8.5 (Swimming Pool Lifts), 15.8.6 (Sloped Entries), or 15.8.8 (Transfer Systems).

EXCEPTION 3: Catch pools shall be required only to be served by an accessible route that connects to the pool edge.

**15.8.3 Wading Pools.** At least one accessible means of entry complying with 15.8.6 (Sloped Entries) shall be provided for each wading pool.

**15.8.4 Spas.** At least one accessible means of entry complying with 15.8.5 (Swimming Pool Lifts), 15.8.7 (Transfer Walls), or 15.8.8 (Transfer Systems) shall be provided for each spa.

EXCEPTION: Where spas are provided in a cluster, 5 percent, but not less than one, in each cluster shall be accessible.

**15.8.5* Pool Lifts.** Pool lifts shall comply with 15.8.5.

**15.8.5.1 Pool Lift Location.** Pool lifts shall be located where the water level does not exceed 48 inches (1220 mm).

EXCEPTION 1: Where the entire pool depth is greater than 48 inches (1220 mm), 15.8.5.1 shall not apply.

EXCEPTION 2: Where multiple pool lift locations are provided, no more than one shall be required to be located in an area where the water level does not exceed 48 inches (1220 mm).

**15.8.5.2 Seat Location.** In the raised position, the centerline of the seat shall be located over the deck and 16 inches (405 mm) minimum from the edge of the pool. The deck surface between the centerline of the seat and the pool edge shall have a slope not greater than 1:48 (see Fig. 68).

**15.8 Swimming Pools, Wading Pools, and Spas**

Fig. 68
Pool Lift Seat Location

**15.8.5.3 Clear Deck Space.** On the side of the seat opposite the water, a clear deck space shall be provided parallel with the seat. The space shall be 36 inches (915 mm) wide minimum and shall extend forward 48 inches (1220 mm) minimum from a line located 12 inches (305 mm) behind the rear edge of the seat. The clear deck space shall have a slope not greater than 1:48 (see Fig. 69).

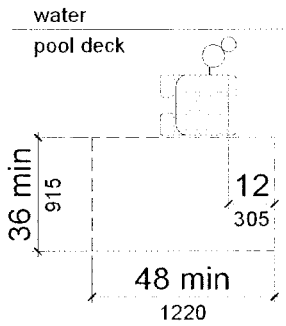


Fig. 69
Clear Deck Space at Pool Lifts

**15.8.5.4 Seat Height.** The height of the lift seat shall be designed to allow a stop at 16 inches (405 mm) minimum to 19 inches (485 mm) maximum measured from the deck to the top of the seat surface when in the raised (load) position (see Fig. 70).

**15.8.5.5 Seat Width.** The seat shall be 16 inches (405 mm) minimum wide.

**15.8.5.6* Footrests and Armrests.** Footrests shall be provided and shall move with the seat. If provided, armrests positioned opposite the water shall be removable or shall fold clear of the seat when the seat is in the raised (load) position.

EXCEPTION: Footrests shall not be required on pool lifts provided in spas.

**15.8.5.7* Operation.** The lift shall be capable of unassisted operation from both the deck and water levels. Controls and operating mechanisms shall be unobstructed when the lift is in use and shall comply with 4.27.4.

**15.8.5.8 Submerged Depth.** The lift shall be designed so that the seat will submerge to a water depth of 18 inches (455 mm) minimum below the stationary water level (see Fig. 71).

**15.8.5.9* Lifting Capacity.** Single person pool lifts shall have a minimum weight capacity of 300 lbs. (136 kg) and be capable of sustaining a static load of at least one and a half times the rated load.

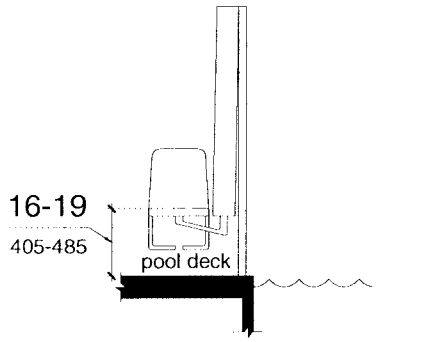


Fig. 70
Pool Lift Seat Height

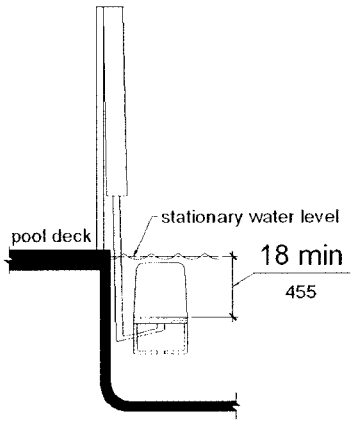


Fig 71
Pool Lift Submerged Depth

**15.8.6 Sloped Entries.** Sloped entries designed to provide access into the water shall comply with 15.8.6.

**15.8.6.1* Sloped Entries.** Sloped entries shall comply with 4.3, except as modified below.

EXCEPTION: Where sloped entries are provided, the surfaces shall not be required to be slip resistant.

**15.8.6.2 Submerged Depth.** Sloped entries shall extend to a depth of 24 inches (610 mm) minimum to 30 inches (760 mm) maximum below the stationary water level. Where landings are required by 4.8, at least one landing shall be located 24 inches (610 mm) minimum to 30 inches (760 mm) maximum below the stationary water level (see Fig. 72).

EXCEPTION: In wading pools, the sloped entry and landings, if provided, shall extend to the deepest part of the wading pool.

**15.8.6.3* Handrails.** Handrails shall be provided on both sides of the sloped entry and shall comply with 4.8.5. The clear width between handrails shall be 33 inches (840 mm) minimum and 38 inches (965 mm) maximum (see Fig. 73).

EXCEPTION 1: Handrail extensions specified by 4.8.5 shall not be required at the bottom landing serving a sloped entry.

EXCEPTION 2: Where a sloped entry is provided for wave action pools, leisure rivers, sand bottom pools, and other pools where user access is limited to one area, the required clear width between handrails shall not apply.

EXCEPTION 3: The handrail requirements of 4.8.5 and 15.8.6.3 shall not be required on sloped entries in wading pools.

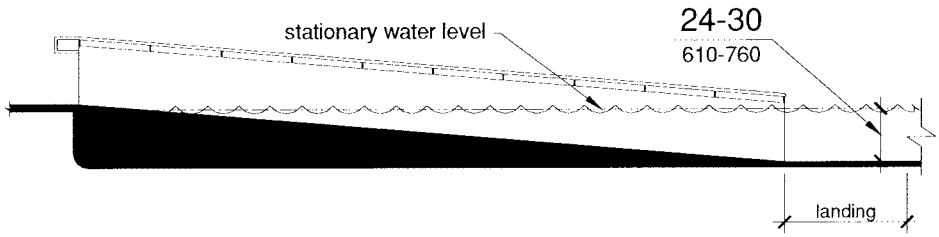


Fig. 72
Sloped Entry Submerged Depth

**15.8 Swimming Pools, Wading Pools, and Spas**

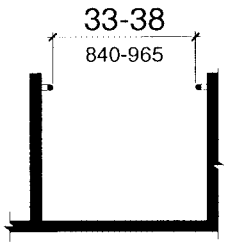


Fig. 73
Sloped Entry Handrails

**15.8.7 Transfer Walls.** Transfer walls shall comply with 15.8.7.

**15.8.7.1 Clear Deck Space.** A clear deck space of 60 inches (1525 mm) minimum by 60 inches (1525 mm) minimum with a slope not steeper than 1:48 shall be provided at the base of the transfer wall. Where one grab bar is provided, the clear deck space shall be centered on the grab bar. Where two grab bars are provided, the clear deck space shall be centered on the clearance between the grab bars (see Fig. 74).

**15.8.7.2 Height.** The height of the transfer wall shall be 16 inches (405 mm) minimum to 19 inches (485 mm) maximum measured from the deck (see Fig. 75).

**15.8.7.3 Wall Depth and Length.** The depth of the transfer wall shall be 12 inches (305 mm) minimum to 16 inches (405 mm) maximum. The length of the transfer wall shall be 60 inches (1525 mm) minimum and shall be centered on the clear deck space (see Fig. 76).

**15.8.7.4 Surface.** Surfaces of transfer walls shall not be sharp and shall have rounded edges.

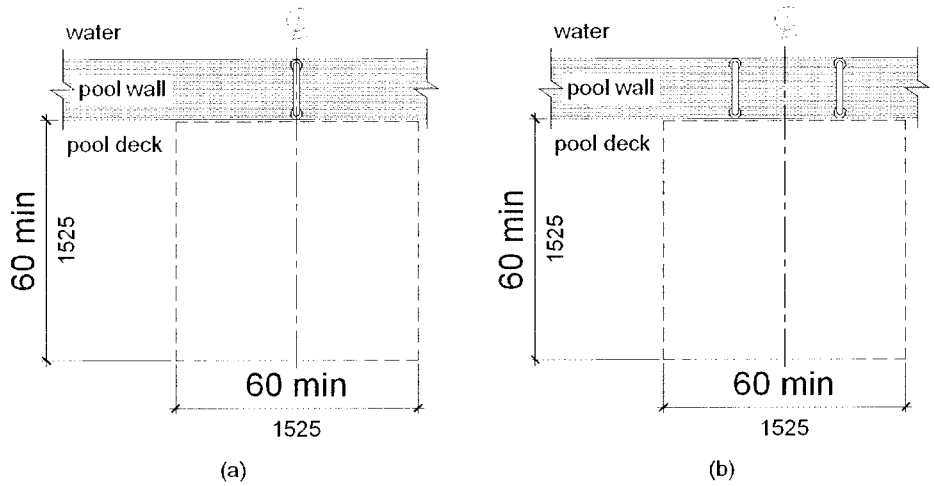


Fig. 74
Clear Deck Space at Transfer Walls

**15.8.7.5 Grab Bars.** At least one grab bar shall be provided on the transfer wall. Grab bars shall be perpendicular to the pool wall and shall extend the full depth of the transfer wall. The top of the gripping surface shall be 4 inches (100 mm) minimum and 6 inches (150 mm) maximum above walls. Where one grab bar is provided, clearance shall be 24 inches (610 mm) minimum on both sides of the grab bar. Where two grab bars are provided, clearance between grab bars shall be 24 inches (610 mm) minimum. Grab bars shall comply with 4.26 (see Fig. 77).

**15.8.8 Transfer Systems.** Transfer systems shall comply with 15.8.8.

**15.8.8.1 Transfer Platform.** A transfer platform 19 inches (485 mm) minimum clear depth by 24 inches (610 mm) minimum clear width shall be provided at the head of each transfer system (see Fig. 78).

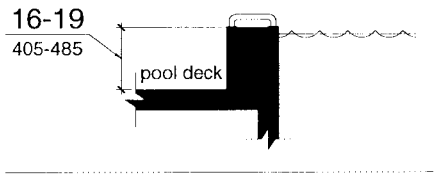


Fig. 75
Transfer Wall Height

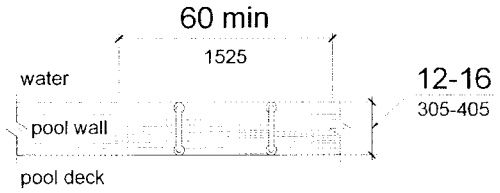


Fig. 76
Transfer Wall Depth and Length

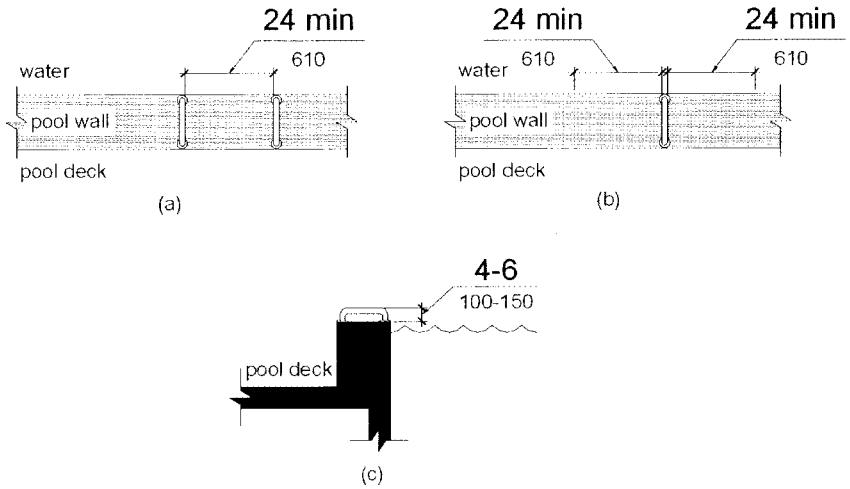


Fig. 77
Grab Bars at Transfer Walls

**15.8 Swimming Pools, Wading Pools, and Spas**

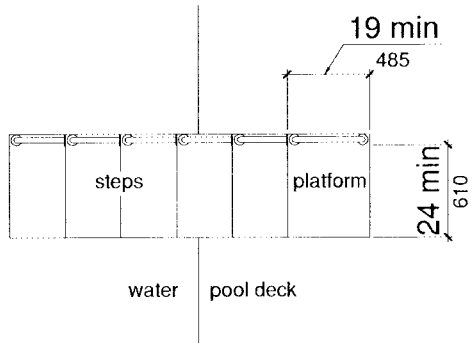


Fig. 78
Transfer System Platform

**15.8.8.2 Clear Deck Space.** A clear deck space of 60 inches (1525 mm) minimum by 60 inches (1525 mm) minimum with a slope not steeper than 1:48 shall be provided at the base of the transfer platform surface and shall be centered along a 24 inch (610 mm) minimum unobstructed side of the transfer platform (see Fig. 79).

**15.8.8.3 Height.** The height of the transfer platform shall comply with 15.8.7.2.

**15.8.8.4* Transfer Steps.** Transfer step height shall be 8 inches (205 mm) maximum. Transfer steps shall extend to a water depth of 18 inches (455 mm) minimum below the stationary water level (see Fig. 80).

**15.8.8.5 Surface.** The surface of the transfer system shall not be sharp and shall have rounded edges.

**15.8.8.6 Size.** Each transfer step shall have a tread clear depth of 14 inches (355 mm) minimum and 17 inches (430 mm) maximum and shall have a tread clear width of 24 inches (610 mm) minimum (see Fig. 81).

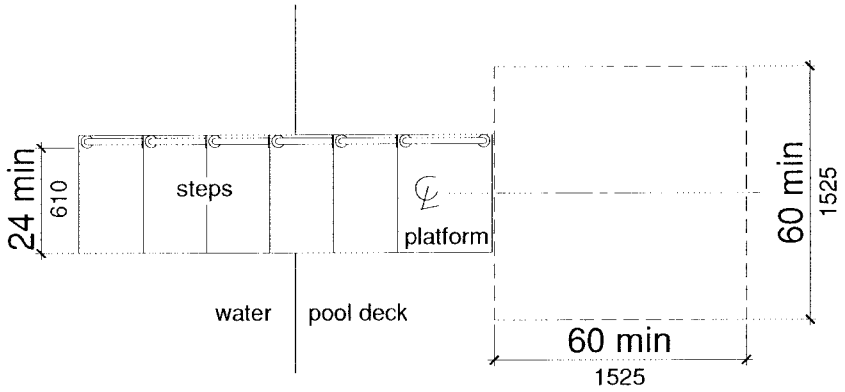


Fig. 79
Clear Deck Space at Transfer Systems

**15.8.8.7* Grab Bars.** At least one grab bar on each transfer step and the transfer platform, or a continuous grab bar serving each transfer step and the transfer platform, shall be provided. Where provided, the top of the gripping surface shall be 4 inches (100 mm) minimum and 6 inches (150 mm) maximum above each step and transfer platform. Where a continuous grab bar is provided, the top of the gripping surface shall be 4 inches (100 mm) minimum and 6 inches (150 mm) maximum above the step nosing and transfer platform. Grab bars shall comply with 4.26 and be located on at least one side of the transfer system. The grab bar located at the transfer platform shall not obstruct transfer (see Fig. 82).

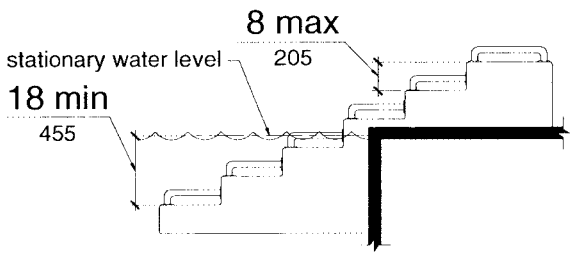


Fig. 80
Transfer System Steps

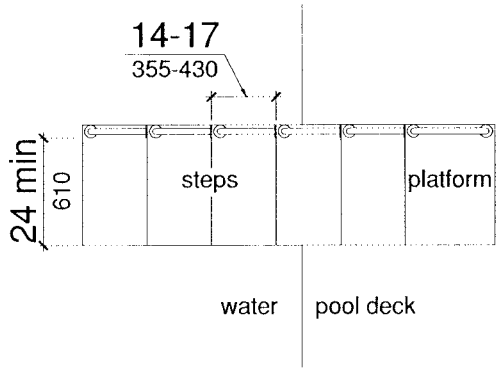


Fig. 81
Size of Transfer System Steps

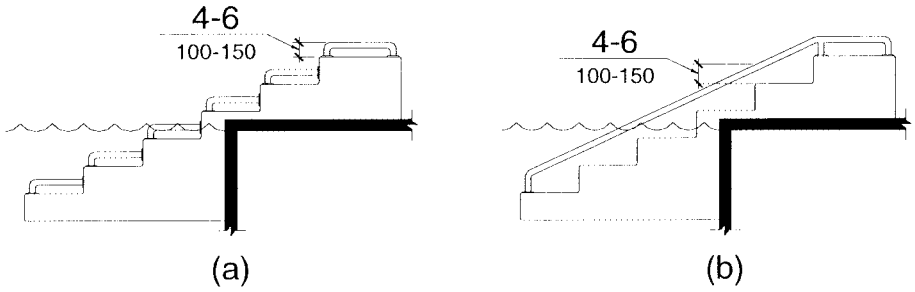


Fig. 82
Grab Bars at Transfer Systems

**15.8 Swimming Pools, Wading Pools, and Spas**

| | |
|---|---|
| **15.8.9 Pool Stairs.** Pool stairs shall comply with 15.8.9.<br><br>**15.8.9.1 Pool Stairs.** Pool stairs shall comply with 4.9, except as modified below.<br><br>**15.8.9.2 Handrails.** The width between handrails shall be 20 inches (510 mm) minimum and 24 inches (610 mm) maximum. Handrail extensions required by 4.9.4 shall not be required at the bottom landing serving a pool stair.<br><br>**15.8.10* Water Play Components.** Where water play components are provided, the provisions of 15.6 and 4.3 shall apply, except as modified or otherwise provided in this section.<br><br>EXCEPTION 1: Where the surface of the accessible route, clear floor or ground spaces and maneuvering spaces connecting play components is submerged, the provisions of 15.6 and 4.3 for cross slope, running slope, and surface shall not apply.<br><br>EXCEPTION 2: Transfer systems complying with 15.6.5 shall be permitted to be used in lieu of ramps to connect elevated play components. | |

## APPENDIX

This appendix contains materials of an advisory nature and provides additional information that should help the reader to understand the minimum requirements of the guidelines or to design buildings or facilities for greater accessibility. The paragraph numbers correspond to the sections or paragraphs of the guideline to which the material relates and are therefore not consecutive (for example, A4.2.1 contains additional information relevant to 4.2.1). Sections of the guidelines for which additional material appears in this appendix have been indicated by an asterisk. Nothing in this appendix shall in any way obviate any obligation to comply with the requirements of the guidelines itself.

**A2.0 General.**

**A2.2 Equivalent Facilitation.** Specific examples of equivalent facilitation are found in the following sections:

| | |
|---|---|
| 4.1.6(3)(c) | Elevators in Alterations |
| 4.31.9 | Text Telephones |
| 7.2 | Sales and Service Counters, Teller Windows, Information Counters |
| 9.1.4 | Classes of Sleeping Accommodations |
| 9.2.2(6)(d) | Requirements for Accessible Units, Sleeping Rooms, and Suites |

**A3.0 Miscellaneous Instructions and Definitions.**

**A3.5 Definitions.**

**Transient Lodging**. The Department of Justice's policy and rules further define what is covered as transient lodging.

**A4.0 Accessible Elements and Spaces: Scope and Technical Requirements.**

**A4.1.1 Application.**

**A4.1.1(3)** Areas Used Only by Employees as Work Areas. Where there are a series of individual work stations of the same type (e.g., laboratories, service counters, ticket booths), 5%, but not less than one, of each type of work station should be constructed so that an individual with disabilities can maneuver within the work stations. Rooms housing individual offices in a typical office building must meet the requirements of the guidelines concerning doors, accessible routes, etc. but do not need to allow for maneuvering space around individual desks. Modifications required to permit maneuvering within the work area may be accomplished as a reasonable accommodation to individual employees with disabilities under Title I of the ADA. Consideration should also be given to placing shelves in employee work areas at a convenient height for accessibility or installing commercially available shelving that is adjustable so that reasonable accommodations can be made in the future.

If work stations are made accessible they should comply with the applicable provisions of 4.2 through 4.35.

**A4.1.2 Accessible Sites and Exterior Facilities: New Construction.**

**A4.1.2(2)(b)** Court Sports: The accessible route must be direct and connect both sides of the court without requiring players on one side of the court to traverse through or around another court to get to the other side of the court.

**A4.1.2(4) Exception 1.** An accessible route is required to connect to the boundary of the area of sport activity. The term "area of sport activity" distinguishes that portion of a room or space where the play or practice of a sport occurs from adjacent areas. Examples of areas of sport activity include: basketball courts, baseball fields, running tracks, bowling lanes, skating rinks, and the area surrounding a piece of gymnastic equipment. While the size of an area of sport activity may vary from sport to sport, each includes only the space needed to play. The following example is provided for additional clarification.

*Example.* Boundary lines define the field where a football game is played. A safety border is also provided around the field. The game may

temporarily be played in the space between the boundary lines and the safety border when players are pushed out of bounds or momentum carries them forward while receiving a pass. In the game of football, the space between the boundary line and the safety border is used to play the game. This space and the football field are included in the area of sport activity.

**A4.1.2(4) Exception 2.** Public circulation routes where animals may also travel, such as in petting zoos and passageways alongside animal pens in State fairs, are not eligible for the exception.

**A4.1.2(5)(e)** Valet parking is not always usable by individuals with disabilities. For instance, an individual may use a type of vehicle controls that render the regular controls inoperable or the driver's seat in a van may be removed. In these situations, another person cannot park the vehicle. It is recommended that some self-parking spaces be provided at valet parking facilities for individuals whose vehicles cannot be parked by another person and that such spaces be located on an accessible route to the entrance of the facility.

**A4.1.3 Accessible Buildings: New Construction.**

**4.1.3(1)(b) Court Sports:** The accessible route must be direct and connect both sides of the court without requiring players on one side of the court to traverse through or around another court to get to the other side of the court.

**4.1.3(3) Exception 1.** An accessible route is required to connect to the boundary of the area of sport activity. The term "area of sport activity" distinguishes that portion of a room or space where the play or practice of a sport occurs from adjacent areas. Examples of areas of sport activity include: basketball courts, baseball fields, running tracks, bowling lanes, skating rinks, and the area surrounding a piece of fixed gymnastic equipment. While the size of an area of sport activity may vary from sport to sport, each includes only the space needed to play. The following example is provided for additional clarification.

*Example.* Boundary lines define the field where a football game is played. A safety border is also provided around the field. The game may temporarily be played in the space between the boundary lines and the safety border when players are pushed out of bounds or momentum carries them forward while receiving a pass. In the game of football, the space between the boundary line and the safety border is used to play the game. This space and the football field are included in the area of sport activity.

**4.1.3(3) Exception 2.** Public circulation routes where animals may also travel, such as in petting zoos and passageways alongside animal pens in State fairs, are not eligible for the exception.

**A4.1.3(5)** Only passenger elevators are covered by the accessibility provisions of 4.10. Materials and equipment hoists, freight elevators not intended for passenger use, dumbwaiters, and construction elevators are not covered by these guidelines. If a building is exempt from the elevator requirement, it is not necessary to provide a platform lift or other means of vertical access in lieu of an elevator.

Under Exception 4, platform lifts are allowed where existing conditions make it impractical to install a ramp or elevator. Such conditions generally occur where it is essential to provide access to small raised or lowered areas where space may not be available for a ramp. Examples include, but are not limited to, raised pharmacy platforms, commercial offices raised above a sales floor, or radio and news booths.

While the use of platform lifts is allowed, ramps are recommended to provide access to player seating areas serving an area of sport activity.

**A4.1.3(9)** Supervised automatic sprinkler systems have built in signals for monitoring features of the system such as the opening and closing of water control valves, the power supplies for needed pumps, water tank levels, and for indicating conditions that will impair the satisfactory operation of the sprinkler system. Because of these monitoring features, supervised automatic sprinkler systems have a high level of

satisfactory performance and response to fire conditions.

**A4.1.3(10)** If an odd number of drinking fountains is provided on a floor, the requirement in 4.1.3(10)(b) may be met by rounding down the odd number to an even number and calculating 50% of the even number. When more than one drinking fountain on a floor is required to comply with 4.15, those fountains should be dispersed to allow wheelchair users convenient access. For example, in a large facility such as a convention center that has water fountains at several locations on a floor, the accessible water fountains should be located so that wheelchair users do not have to travel a greater distance than other people to use a drinking fountain.

**A4.1.3(12)(c)** Different types of lockers may include full-size and half-size lockers, as well as those specifically designed for storage of various sports equipment.

**A4.33.6 Placement of Listening Systems**

within the seating area are provided. This will allow choice in viewing and price categories.

Building and life safety codes set minimum distances between rows of fixed seats with consideration of the number of seats in a row, the exit aisle width and arrangement, and the location of exit doors. "Continental" seating, with a greater number of seats per row and a commensurate increase in row spacing and exit doors, facilitates emergency egress for all people and increases ease of access to mid-row seats especially for people who walk with difficulty. Consideration of this positive attribute of "continental" seating should be included along with all other factors in the design of fixed seating areas.

Removable armrests are recommended on fixed companion seats provided in assembly areas in amusement facilities. This provides the option for an individual using a wheelchair or other mobility device to transfer into a seat where motion and other effects may be provided as part of the amusement experience.

**A4.33.6 Placement of Listening Systems.** A distance of 50 ft (15 m) allows a person to distinguish performers' facial expressions.

**A4.33.7 Types of Listening Systems.** An assistive listening system appropriate for an assembly area for a group of persons or where the specific individuals are not known in advance, such as a playhouse, lecture hall or movie theater, may be different from the system appropriate for a particular individual provided as an auxiliary aid or as part of a reasonable accommodation. The appropriate device for an individual is the type that individual can use, whereas the appropriate system for an assembly area will necessarily be geared toward the "average" or aggregate needs of various individuals. A listening system that can be used from any seat in a seating area is the most flexible way to meet this specification. Earphone jacks with variable volume controls can benefit only people who have slight hearing loss and do not help people who use hearing aids. At the present time, magnetic induction loops are the most feasible type of listening system for people who use hearing aids equipped with "T- coils," but people without hearing aids or those with hearing aids not equipped with inductive pick-ups cannot use them without special receivers. Radio frequency systems can be extremely effective and inexpensive. People without hearing aids can use them, but people with hearing aids need a special receiver to use them as they are presently designed. If hearing aids had a jack to allow a by-pass of microphones, then radio frequency systems would be suitable for people with and without hearing aids. The Department of Justice's regulations implementing titles II and III of the ADA require public entities and public accommodations to provide appropriate auxiliary aids and services to ensure effective communication. See 28 CFR 35.160, 28CFR 35.164, and 28 CFR 36.303. Where assistive listening systems are used to provide effective communication, the Department of Justice considers it essential that a portion of receivers be compatible with hearing aids.

Some listening systems may be subject to interference from other equipment and feedback from hearing aids of people who are using the systems. Such interference can be controlled by careful engineering design that anticipates feedback sources in the surrounding area.

Table A2, shows some of the advantages and disadvantages of different types of assistive listening systems. In addition, the Access Board has published a pamphlet on Assistive Listening Systems which lists demonstration centers across the country where technical assistance can be obtained in selecting and installing appropriate systems. The state of New York has also adopted a detailed technical specification which may be useful.

**A4.36.2 Saunas and Steam Rooms.** A 60-inch turning diameter space or a T-shaped space is required within the sauna or steam room. Removable benches or seats are permitted to obstruct the 60-inch or T-shaped space.

**A4.37.3 Benches.** Back support may be achieved through locating benches adjacent to walls or by other designs that will meet the minimum dimensions specified.

**A5.0 Restaurants and Cafeterias.**

**A5.1 General.** Dining counters (where there is no service) are typically found in small carry-out restaurants, bakeries, or coffee shops and may only be a narrow eating surface attached to a wall. This section requires that where such a dining counter is provided, a portion of the counter shall be at the required accessible height.

**A7.0 Business, Mercantile and Civic.**

**A7.2(3)(iii) Counter or Teller Windows with Partitions.** Methods of facilitating voice communication may include grilles, slats, talk-through baffles, and other devices mounted directly into the partition which users can speak directly into for effective communication. These methods are required to be designed or placed so that they are accessible to a person who is standing or seated. However, if the counter is only used by persons in a seated position, then a method of facilitating communication which is accessible to standing persons would not be necessary.

**A15.0 Recreation Facilities.**

Unless otherwise modified in Section 4 or specifically addressed in section 15, all other ADAAG provisions apply for the design and construction of recreation facilities and elements. The provisions in this section apply wherever these elements are provided. For example, office buildings may contain a room with exercise equipment and these sections therefore apply.

**A15.1 Amusement Rides.**

These guidelines apply to newly designed or newly constructed amusement rides. A custom designed and constructed ride is new upon its "first use," which is the first time amusement park patrons take the ride. With respect to amusement rides purchased from other entities, "new" refers to the first permanent installation of the ride, whether it is used "off the shelf" or it is modified before it is installed. Where amusement rides are moved after several seasons to another area of the park or to another park, the ride would not be considered newly designed or newly constructed.

Amusement rides designed primarily for children, amusement rides that are controlled or operated by the rider, and amusement rides without seats, are not required to provide wheelchair spaces, transfer seats, or transfer systems, and need not meet the signage requirements in 15.1.6. The load and unload areas of these rides must, however, be on an accessible route and must provide maneuvering space under 15.1.4 and 15.1.5.

The scoping and technical provisions of the guidelines were developed to address common amusement rides. There will be other amusement attractions that have unique designs and features which are not adequately addressed by the guidelines. In those situations, the guidelines are to be applied to the extent possible.

An accessible route must be provided to these areas. Where an attraction or ride has unique features for which there are no applicable scoping provisions, then a reasonable number, but at least one, of the features must be located on an accessible route. Where there are appropriate technical provisions, they must be applied to the elements that are covered by the scoping provisions. Where an attraction has unique designs for which the technical provisions are not appropriate, the operators of those attractions are still subject to all the other requirements of the ADA, including program accessibility, barrier removal and the general obligation to provide individuals with disabilities an equal opportunity to enjoy the goods and services provided by their facilities. An example of an amusement ride not specifically addressed by the guidelines includes "virtual reality" rides where the device does not move through a fixed course within a defined area.

**A15.1 Exception 1.** Mobile or temporary rides are those set up for short periods of time such as traveling carnivals, State and county fairs, and festivals. The amusement rides that are covered by section 15.1 are ones that are not regularly assembled and disassembled.

**A15.1 Exception 2.** The exception does not apply to those rides where patrons may cause the ride to make incidental movements, but where the patron otherwise has no control over the ride.

**A15.1 Exception 3.** The exception is limited to those rides designed "primarily" for children, where children are assisted on and off the ride by an adult. This exception is limited to those rides designed for children and not for the occasional adult user. An accessible route to and maneuvering space in the load and unload area will provide access for adults and family members assisting children on and off these rides.

**A15.1.2 Alterations to Amusement Rides.** Routine maintenance, painting, and changing of theme boards are examples of activities that do not constitute an alteration subject to section 15.1.2. Where existing amusement rides are moved and not altered, section 15.1 does not apply unless the load and unload area of the amusement ride is newly designed and constructed. If a load or unload area is altered, the alteration provisions of ADAAG 4.1.6 must be applied to the altered area.

**A15.1.4 Accessible Route.** Steeper slopes are permitted (not to exceed 1:8) where the accessible route connects to the amusement ride in the load and unload position. This is permitted only where compliance with 4.8.2 (maximum slope 1:12) is "structurally or operationally infeasible". In most cases, this will be limited to areas where the accessible route leads directly to the amusement ride and where there are space limitations on the ride, not the queue line. Where possible, the least possible slope should be used on the accessible route that serves the amusement ride.

**A15.1.7.1.2 Amusement Rides with Wheelchair Spaces.** 36 CFR 1192.83(c) ADA Accessibility Guidelines for Transportation Vehicles - Light Rail Vehicles and Systems - Mobility Aid Accessibility is available at www.access-board.gov/transit/html/vguide.htm#LRVM. It references provisions for bridge plates and ramps used for gaps between wheelchair spaces and floors of load and unload areas.

**A15.1.7.2 Exception 3.** This exception for protruding objects applies to the ride devices, not to circulation areas or accessible routes in the queue lines or the load and unload areas.

**A15.1.7.2.2 Wheelchair Spaces - Side Entry.** Under certain circumstances, a 32-inch clear opening will not provide sufficient width to accommodate a turn into an amusement ride. The amount of clear space needed within the ride, and the size and position of the opening are interrelated. Additional space for maneuvering and a wider door will be needed where a side opening is centered on the ride. For example, where a 42-inch opening is provided, a minimum clear space of 60 inches in length and 36 inches in depth is needed (see Fig. A9). This is necessary to ensure adequate space for maneuvering. For additional guidance refer to Figure 3 (Wheelchair Turning Space) and Figure 4 (Minimum Clear Floor Space for Wheelchairs) on minimum space requirements.

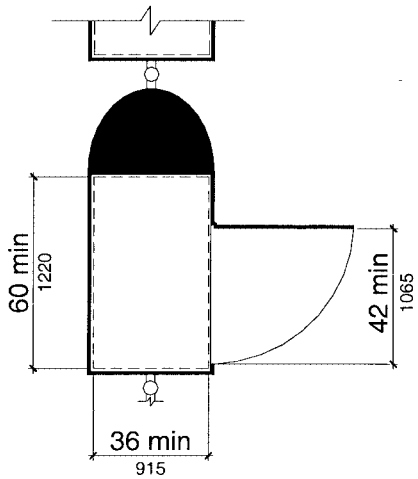


Fig. A9
Wheelchair Spaces - Side Entry

**A15.1.8 Amusement Ride Seats Designed for Transfer.** There are many different ways that individuals transfer to and from their wheelchairs or mobility devices. The proximity of the clear floor or ground space next to an element and the height of the element one is transferring to are both critical for a safe and independent transfer. Providing additional clear floor or ground space both in front of and diagonally to the element will provide flexibility and increased usability for a more diverse population of individuals with disabilities. Ride seats designed for transfer should involve only one transfer. Where possible, designers are encouraged to locate the ride seat no higher than 17 to 19 inches above the load and unload surface. Where greater distances are required for transfers, consideration should be given to providing gripping surfaces, seat padding, and avoiding sharp or protruding objects in the path of transfer to better facilitate the transfer process.

**A15.1.9 Transfer Devices for Use with Amusement Rides.** Transfer devices for use with

amusement rides should permit individuals to make independent transfers to and from their wheelchairs or mobility devices. There are a variety of transfer devices available that could be adapted to provide access onto an amusement ride. Examples of devices that may provide for transfers include, but are not limited to, transfer systems (see 15.8.8), lifts, mechanized seats, and other custom designed systems. Operators and designers have flexibility in developing designs that will facilitate individuals to transfer onto amusement rides. These systems or devices should be designed to be reliable and sturdy. A transfer board, for example, would not be sufficient because it will not provide enough support or stability and may cause injury.

Designs which limit the number of transfers required from one's wheelchair or mobility device to the ride seat are encouraged. When using a transfer device to access an amusement ride, the least amount of transfers for the least amount of distance is desired. Where possible, designers are encouraged to locate the transfer device seat no higher than 17 to 19 inches above the load and unload surface. Where greater distances are required for transfers, consideration should be given to providing gripping surfaces, seat padding, and avoiding sharp or protruding objects in the path of transfer to better facilitate the transfer process. Where a series of transfers are required to reach the amusement ride seat, each vertical transfer should not exceed 8 inches.

As discussed with amusement rides seats designed for transfer, there are many different ways that individuals transfer to and from their wheelchairs or mobility devices. The proximity of the clear floor or ground space next to an element and the height of the element one is transferring to are both critical for a safe and independent transfer. Providing additional clear floor or ground space both in front of and diagonally to the element will provide flexibility and increased usability for a more diverse population of individuals with disabilities.

**A15.2 Boating Facilities.**

**A15.2.2 Accessible Route.** The following two examples apply exceptions two and three.

Example 1. Boat slips which are required to be accessible are provided at a floating pier. The vertical distance an accessible route must travel to the pier when the water is at its lowest level is six feet, although the water level only fluctuates three feet. To comply with exceptions 2 and 3, at least one design solution would provide a gangway at least 72.25 feet long which ensures the slope does not exceed 1:12.

Example 2. A gangway is provided to a floating pier which is required to be on an accessible route. The vertical distance is 10 feet between the elevation where the gangway departs the landside connection and the elevation of the pier surface at the lowest water level. Exceptions 2 and 3, which modify 4.8.2, permit the gangway to be at least 80 feet long. Another design solution would be to have two 40-foot continuous gangways joined together at a float, where the float (as the water level falls) will stop dropping at an elevation five feet below the landside connection.

**A15.2.3 Boat Slips: Minimum Number.** Accessible boat slips are not "reserved" for persons with disabilities in the same manner as accessible vehicle parking spaces. Rather, accessible boat slip use is comparable to accessible hotel rooms. The Department of Justice is responsible for addressing operational issues relating to the use of accessible facilities and elements. The Department of Justice currently advises that hotels should hold accessible rooms for persons with disabilities until all other rooms are filled. At that point, accessible rooms can be open for general use on a first come, first serve basis.

The following two examples apply to a boating facility with a single non-demarcated pier.

Example 1. A site contains a new boating facility which consists of a single 60-foot pier. Boats are only moored parallel with the pier on both sides to allow occupants to embark or disembark.

Since the number of slips cannot be identified, section 15.2.3 requires each 40 feet of boat slip edge to be counted as one slip for purposes of determining the number of slips available and determines the number required to be accessible. The 120 feet of boat slip edge at the pier would equate with 3 boat slips. Table 15.2.3 would require 1 slip to be accessible and comply with 15.2.5. Section 15.2.5 (excluding the exceptions within the section) requires a clear pier space 60 inches wide minimum extending the length of the slip. In this example, because the pier is at least 40 feet long, the accessible slip must contain a clear pier space at least 40 feet long which has a minimum width of 60 inches.

Example 2. A new boating facility consisting of a single pier 25 feet long and 3 feet wide is being planned for a site. The design intends to allow boats to moor and occupants to embark and disembark on both sides, and at one end. As the number of boat slips cannot be identified, applying section 15.2.3 would translate to 53 feet of boat slip edge at the pier. This equates with two slips. Table 15.2.5 would require 1 slip to be accessible. To comply with 15.2.5 (excluding the exceptions within the section), the width of the pier must be increased to 60 inches. Neither 15.2.3 or 15.2.5 requires the pier length to be increased to 40 feet.

**A15.2.3.1 Dispersion.** Types of boat slips are based on the size of the boat slips; whether single berths or double berths, shallow water or deep water, transient or longer-term lease, covered or uncovered; and whether slips are equipped with features such as telephone, water, electricity and cable connections. The term "boat slip" is intended to cover any pier area where recreational boats embark or disembark, unless classified as a launch ramp boarding pier. For example, a fuel pier may contain boat slips, and this type of short term slip would be included in determining compliance with 15.2.3.1.

**A15.2.4 Boarding Piers at Boat Launch Ramps.** The following two examples apply to a boat launch ramp boarding pier.

Example 1. A chain of floats is provided on a launch ramp to be used as a boarding pier which is required to be accessible by 15.2.4. At high water, the entire chain is floating and a transition plate connects the first float to the surface of the launch ramp. As the water level decreases, segments of the chain end up resting on the launch ramp surface, matching the slope of the launch ramp. As water levels drop, segments function also as gangways because one end of a segment is resting on the launch ramp surface and the other end is connecting to another floating segment in the chain.

Under ADAAG 4.1.2(2), an accessible route must serve the last float because it would function as the boarding pier at the lowest water level. Under exception 3 in 15.2.4, each float is not required to comply with ADAAG 4.8, but must meet all other requirements in ADAAG 4.3, unless exempted by exception 1 in 15.2.4. In this example, because the entire chain also functions as a boarding pier, the entire chain must comply with the requirements of 15.2.5, including the 60-inch minimum clear pier width provision.

Example 2. A non-floating boarding pier supported by piles divides a launching area into two launch ramps and is required to be accessible. Under ADAAG 4.1.2(2), an accessible route must connect the boarding pier with other accessible buildings, facilities, elements, and spaces on the site. Although the boarding pier is located within a launch ramp, because the pier is not a floating pier or a skid pier, none of the exceptions in 15.2.4 apply. To comply with ADAAG 4.3, either the accessible route must run down the launch ramp or the fixed boarding pier could be relocated to the side of the two launch ramps. The second option leaves the slope of the launch ramps unchanged, because the accessible route runs outside the launch ramps.

**A15.2.4.1 Boarding Pier Clearances.** The guidelines do not establish a minimum length for accessible boarding piers at boat launch ramps. The accessible boarding pier would have a length which is at least equal to other boarding piers provided at the facility. If no other boarding pier

is provided, the pier would have a length equal to what would have been provided if no access requirements applied. The entire length of accessible boarding piers would be required to comply with the same technical provisions that apply to accessible boat slips. For example, at a launch ramp, if a 20-foot long accessible boarding pier is provided, the entire 20 feet must comply with the pier clearance requirements in 15.2.5. Likewise, if a 60-foot long accessible boarding pier is provided, the pier clearance requirements in 15.2.5 would apply to the entire 60 feet.

**A15.2.5 Accessible Boat Slips.** Although the minimum width of the clear pier space is 60 inches, it is recommended that piers be wider than 60 inches to improve the safety for persons with disabilities, particularly on floating piers.

**A15.2.5.1 Clearances, Exception 3.** Where the conditions in exception 3 are satisfied, existing facilities are only required to have one accessible boat slip with a pier clearance which runs the length of the slip. All other accessible slips are allowed to have the required pier clearance at the head of the slip. Under this exception, at piers with perpendicular boat slips, the width of most "finger piers" will remain unchanged. However, where mooring systems for floating piers are replaced as part of pier alteration projects, an opportunity may exist for increasing accessibility. Piers may be reconfigured to allow an increase in the number of wider finger piers, and serve as accessible boat slips.

**A15.3 Fishing Piers and Platforms.**

**A15.3.3.1 Edge Protection.** Edge protection is required only where railings, guards, or handrails are provided on a fishing pier or platform. Edge protection will prevent wheelchairs or other mobility devices from slipping off the fishing pier or platform. Extending the deck of the fishing pier or platform 12 inches where the 34-inch high railing is provided is an alternative design, permitting individuals using a wheelchair or other mobility device to pull into a clear space and move beyond the face of the railing. In such a design, edge protection is not required.

**A15.3.2 Accessible Route, Exception 2.** For example, to provide access to an accessible floating fishing pier, a gangway is used. The vertical distance is 60 inches between the elevation that the gangway departs the landside connection and the elevation of the pier surface at the lowest water level. Exception 2 permits the use of a gangway at least 30 feet long, or a series of connecting gangways with a total length of at least 30 feet. The length of transition plates would not be included in determining if the gangway(s) meet the requirements of the exception.

**A15.3.3.3 Dispersion.** Portions of the railings that are lowered to provide fishing opportunities for persons with disabilities must be located in a variety of locations on the fishing pier or platform to give people a variety of locations to fish. Different fishing locations may provide varying water depths, shade (at certain times of the day), vegetation, and proximity to the shoreline or bank.

**A15.4 Golf.**

**A15.4.2 Accessible Routes.** The accessible route or golf car passage must serve accessible elements and spaces located within the boundary of a golf course. The 48-inch minimum width for the accessible route is necessary to ensure passage of a golf car on either the accessible route or the golf car passage. This is important where the accessible route is used to connect the golf car rental area, bag drop areas, practice putting greens, accessible practice teeing grounds, course toilet rooms, and course weather shelters. These are areas outside the boundary of the golf course, but are areas where an individual using an adapted golf car may travel. A golf car passage may not be substituted for other accessible routes, required by ADAAG 4.1.2, located outside the boundary of the course. For example, an accessible route connecting an accessible parking space to the entrance of a golf course clubhouse is not covered by this provision.

**A15.4.3 Accessible Route - Driving Ranges.** Both a stand alone driving range or a driving range next to a golf course must provide an

accessible route or golf car passage that connects accessible teeing stations with accessible parking spaces. The accessible route must be a minimum width of 48 inches; 60 inches if handrails are provided. The additional width permits the use of a golf car on the accessible route. Providing a golf car passage will permit a person that uses a golf car to practice driving a golf ball from the same position and stance used when playing the game. Additionally, the space required for a person using a golf car to enter and exit the teeing stations required to be accessible should be considered.

**A15.5 Miniature Golf.**

Where possible, providing access to all holes on a miniature golf course is recommended. If a course is designed with the minimum 50 percent accessible holes, designers or operators are encouraged to select holes which provide for an equivalent experience to the maximum extent possible. Accessible holes are required to be consecutive with one break permitted, if the last hole on the course is in the sequence.

**A15.5.3 Accessible Route.** Where only the minimum 50 percent of the holes are accessible, an accessible route from the last accessible hole to the course exit or entrance must not require travel back through other holes. In some cases, this may require an additional route. Other options include increasing the number of accessible holes in a way that limits the distance needed to connect the last accessible hole with the course exit or entrance. In any case, careful consideration to the layout of the course will be important to minimize space impacts.

The 1-inch curb for a 32-inch minimum opening can be located in an area where the ball is less likely to ricochet. Where the accessible route on the hole is provided, steeper slopes are permitted for a limited distance. A landing or level area must separate each of these steeper sloping segments. This will provide a resting area between the steeper segments.

**A15.5.5 Golf Club Reach Range.** Accessible holes on a miniature golf course may be provided with an accessible route leading through the hole or with the accessible route next to the hole. Where the accessible route is provided adjacent to the hole, the route must be located within the golf club reach range. This allows individuals sufficient space and reach to play the game outside of the hole. Where possible, the distance between the level areas and the accessible route should be as close as possible, affording more opportunities for play.

**A15.6 Play Areas.**

**A15.6.1 General.** This section is to be applied during the design, construction, and alteration of play areas for children ages 2 and over. Play areas are the portion of a site where play components are provided. This section does not apply to other portions of a site where elements such as sports fields, picnic areas, or other gathering areas are provided. Those areas are addressed by other sections of ADAAG. Play areas may be located on exterior sites or within a building. Where separate play areas are provided within a site for children in specified age groups (e.g., preschool (ages 2 to 5) and school age (ages 5 to 12)), each play area must comply with this section. Where play areas are provided for the same age group on a site but are geographically separated (e.g., one is located next to a picnic area and another is located next to a softball field), they are considered separate play areas and each play area must comply with this section.

**A15.6.2 Ground Level Play Components.** A ground level play component is a play component approached and exited at the ground level. Examples of ground level play components include spring rockers, swings, diggers, and stand alone slides. When distinguishing between the different types of ground level play components, consider the general experience provided by the play component. Examples of different types of experiences include, but are not limited to, rocking, swinging, climbing, spinning, and sliding. A spiral slide may provide a slightly different experience from a straight slide, but sliding is the general experience and therefore a spiral slide is not considered a different type of play component than a straight slide.

**A15.6 Play Areas**

The number of ground level play components is not dependent on the number of children who can play on the play component. A large seesaw designed to accommodate ten children at once is considered one ground level play component.

Where a large play area includes two or more composite play structures designed for the same age group, the total number of elevated play components on all the composite play structures must be added to determine the additional number and types of ground level play components that must be provided on an accessible route, and the type of accessible route (e.g., ramps or transfer systems) that must be provided to the elevated play components.

Ground level play components accessed by children with disabilities must be integrated in the play area. Designers should consider the optimal layout of ground level play components accessed by children with disabilities to foster interaction and socialization among all children. Grouping all ground level play components accessed by children with disabilities in one location is not considered integrated.

**A15.6.3 Elevated Play Components.** Elevated play components are approached above or below grade and are part of a composite play structure. A double or triple slide that is part of a composite play structure is one elevated play component. For purposes of this section, ramps, transfer systems, steps, decks, and roofs are not considered elevated play components. These elements are generally used to link other elements on a composite play structure. Although socialization and pretend play can occur on these elements, they are not primarily intended for play. Some play components that are attached to a composite play structure can be approached or exited at the ground level or above grade from a platform or deck. For example, a climber attached to a composite play structure can be approached or exited at the ground level or above grade from a platform or deck on a composite play structure. Play components that are attached to a composite play structure and can be approached from a platform or deck (e.g., climbers and overhead play components), are considered elevated play components. These play components are not considered ground level play components also, and do not count toward the requirements in 15.6.2 regarding the number of ground level play components that must be located on an accessible route.

**A15.6.4 Accessible Routes.** Accessible routes within the boundary of the play area must comply with 15.6.4. Accessible routes connecting the play area to parking, drinking fountains, and other elements on a site must comply with 4.3. Accessible routes provide children who use wheelchairs or other mobility devices the opportunity to access play components. Accessible routes should coincide with the general circulation path used within the play area. Careful placement and consideration of the layout of accessible routes will enhance the ability of children with disabilities to socialize and interact with other children.

Where possible, designers and operators are encouraged to provide wider ground level accessible routes within the play area or consider designing the entire ground surface to be accessible. Providing more accessible spaces will enhance the integration of all children within the play area and provide access to more play components. A maximum slope of 1:16 is required for ground level ramps; however, a lesser slope will enhance access for those children who have difficulty negotiating the 1:16 maximum slope. Handrails are not required on ramps located within ground level use zones.

Where a stand alone slide is provided, an accessible route must connect the base of the stairs at the entry point, and the exit point of the slide. A ramp or transfer system to the top of the slide is not required. Where a sand box is provided, an accessible route must connect to the border of the sand box. Accessibility to the sand box would be enhanced by providing a transfer system into the sand or by providing a raised sand table with knee clearance complying with 15.6.6.3.

Elevated accessible routes must connect the entry and exit points of at least 50 percent of elevated play components. Ramps are preferred over transfer systems since not all children who use wheelchairs or other mobility devices may be able to use or may choose not to use transfer systems. Where ramps connect elevated play components, the maximum rise of any ramp run is limited to12 inches. Where possible, designers and operators are encouraged to provide ramps with a lesser slope than the 1:12 maximum. Berms or sculpted dirt may be used to provide elevation and may be part of an accessible route to composite play structures.

Platform lifts complying with 4.11 and applicable State and local codes are permitted as a part of an accessible route. Because lifts must be independently operable, operators should carefully consider the appropriateness of their use in unsupervised settings.

**A15.6.5 Transfer Systems.** Transfer systems are a means of accessing composite play structures. Transfer systems generally include a transfer platform and a series of transfer steps. Children who use wheelchairs or other mobility devices transfer from their wheelchair or mobility devices onto the transfer platform and lift themselves up or down the transfer steps and scoot along the decks or platforms to access elevated play components. Some children may be unable or may choose not to use transfer systems. Where transfer systems are provided, consideration should be given to the distance between the transfer system and the elevated play components. Moving between a transfer platform and a series of transfer steps requires extensive exertion for some children. Designers should minimize the distance between the points where a child transfers from a wheelchair or mobility device and where the elevated play components are located. Where elevated play components are used to connect to another elevated play component in lieu of an accessible route, careful consideration should be used in the selection of the play components used for this purpose. Transfer supports are required on transfer platforms and transfer steps to assist children when transferring. Some examples of supports include a rope loop, a loop type handle, a slot in the edge of a flat horizontal or vertical member, poles or bars, or D rings on the corner posts.

**A15.6.6 Play Components.** Clear floor or ground spaces, maneuvering spaces, and accessible routes may overlap within play areas. A specific location has not been designated for the clear floor or ground spaces or maneuvering spaces, except swings, because each play component may require that the spaces be placed in a unique location. Where play components include a seat or entry point, designs that provide for an unobstructed transfer from a wheelchair or other mobility device are recommended. This will enhance the ability of children with disabilities to independently use the play component.

When designing play components with manipulative or interactive features, consider appropriate reach ranges for children seated in wheelchairs. The following table provides guidance on reach ranges for children seated in wheelchairs. These dimensions apply to either forward or side reaches. The reach ranges are appropriate for use with those play components that children seated in wheelchairs may access and reach. Where transfer systems provide access to elevated play components, the reach ranges are not appropriate.

**Children's Reach Ranges**

| Forward or Side Reach | Ages 3 and 4 | Ages 5 through 8 | Ages 9 through 12 |
|---|---|---|---|
| **High (maximum)** | 36 in (915 mm) | 40 in (1015 mm) | 44 in (1120 mm) |
| **Low (minimum)** | 20 in (510 mm) | 18 in (455 mm) | 16 in (405 mm) |

**A15.7 Exercise Equipment and Machines**

Where a climber is located on a ground level accessible route, some of the climbing rings should be within the reach ranges. A careful balance of providing access to play components but not eliminating the challenge and nature of the activity is encouraged.

**A15.6.7 Ground Surfaces.** Ground surfaces along clear floor or ground spaces, maneuvering spaces, and accessible routes must comply with the ASTM F 1951 Standard Specification for Determination of Accessibility to Surface Systems Under and Around Playground Equipment. The ASTM F 1951 standard is available from the American Society for Testing and Materials (ASTM), 100 Barr Harbor Drive, West Conshohocken, PA 19428-2959, telephone (610) 832-9585. The ASTM F 1951 standard may be ordered online from ASTM (http://www.astm.org). The ASTM F 1951 standard determines the accessibility of a surface by measuring the work required to propel a wheelchair across the surface. The standard includes tests of effort for both straight ahead and turning movement, using a force wheel on a rehabilitation wheelchair as the measuring device. To meet the standard, the force required must be less than that required to propel the wheelchair up a ramp with a 1:14 slope. When evaluating ground surfaces, operators should request information about compliance with the ASTM F 1951 standard.

Ground surfaces must be inspected and maintained regularly and frequently to ensure continued compliance with the ASTM F 1951 standard. The type of surface material selected and play area use levels will determine the frequency of inspection and maintenance activities.

When using a combination of surface materials, careful design is necessary to provide appropriate transitions between the surfaces. Where a rubber surface is installed on top of asphalt to provide impact attenuation, the edges of the rubber surface may create a change in level between the adjoining ground surfaces. Where the change in level is greater than ½ inch, a sloped surface with a maximum slope of 1:12 must be provided. Products are commercially available that provide a 1:12 slope at transitions. Transitions are also necessary where the combination of surface materials include loose fill products. Where edging is used to prevent the loose surface from moving onto the firmer surface, the edging may create a tripping hazard. Where possible, the transition should be designed to allow for a smooth and gradual transition between the two surfaces.

**A15.7 Exercise Equipment and Machines, Bowling Lanes, and Shooting Facilities.**

**A15.7.2 Exercise Equipment and Machines.** Fitness facilities often provide a range of choices of exercise equipment. At least one of each type of exercise equipment and machine must be served by an accessible route. Most strength training equipment and machines are considered different types. For example, a bench press machine is considered a different type than a biceps curl machine. The requirement for providing access to each type is intended to cover the variety of strength training machines. Where operators provide a biceps curl machine and free weights, both are required to meet the provisions in this section, even though an individual may be able to work on their biceps through both types of equipment. Where the exercise equipment and machines provided are only different in that different manufacturers provide them, only one of each type of machine is required to meet these guidelines. For example, where two bench press machines are provided and each is manufactured by a different company, only one is required to comply.

Similarly, there are many types of cardiovascular exercise machines, such as stationary bicycles, rowing machines, stair climbers, and treadmills. Each machine provides a cardiovascular exercise and is considered a different type for purposes of these guidelines.

One clear floor or ground space is permitted to be shared between two pieces of exercise equipment. Designers should carefully consider layout

options to maximize space such as connecting ends of the row and center aisle spaces.

The position of the clear floor space may vary greatly depending on the use of the equipment or machine. For example, to make a shoulder press accessible, clear floor space next to the seat would be appropriate to allow for transfer. Clear floor space for a bench press machine designed for use by an individual seated in a wheelchair, however, will most likely be centered on the operating mechanisms.

Designers and operators are encouraged to select exercise equipment and machines that provide fitness opportunities for persons with lower body extremity disabilities. Upper body exercise equipment and machines that offer either cardiovascular or strength training will enhance fitness opportunities for persons with disabilities from a wheelchair or mobility device. Examples include: equipment or machines that provide arm ergometry, free weights, and weighted pulley systems that are usable from a wheelchair or mobility device.

**A15.7.4. Shooting Facilities.** Examples of different types of firing positions include, but are not limited to: positions having different admission prices, positions with or without weather covering or lighting, and positions supporting different shooting events such as argon, muzzle loading rifle, small bore rifle, high power rifle, bull's eye pistol, action pistol, silhouette, trap, skeet, and archery (bow and crossbow).

**A15.8 Swimming Pools, Wading Pools, and Spas.**

**A15.8.2 Swimming Pools.** Where more than one means of access is provided into the water, it is recommended that the means be different. Providing different means of access will better serve the varying needs of people with disabilities in getting into and out of a swimming pool. It is also recommended that where two or more means of access are provided, they not be provided in the same location in the pool. Different locations will provide increased options for entry and exit, especially in larger pools.

**A15.8.2 Swimming Pools, Exception 1.** Pool walls at diving areas and areas along pool walls where there is no pool entry because of landscaping or adjacent structures should be counted when determining the number of accessible means of entry required.

**A15.8.5 Pool Lifts.** There are a variety of seats available on pool lifts ranging from sling seats to those that are preformed or molded. Pool lift seats with backs will enable a larger population of persons with disabilities to use the lift. Pool lift seats that consist of materials that resist corrosion and provide a firm base to transfer will be usable by a wider range of people with disabilities. Additional options such as armrests, head rests, seat belts, and leg support will enhance accessibility and better accommodate people with a wide range of disabilities.

**A15.8.5.6 Footrests and Armrests.** Footrests are encouraged on lifts used in larger spas, where the foot well water depth is 34 inches or greater. Providing footrests, especially ones that support the entire foot, will facilitate safe and independent transfers by a larger population of persons with disabilities.

**A15.8.5.7 Operation.** Pool lifts must be capable of unassisted operation from both the deck and water levels. This will permit a person to call the pool lift when the pool lift is in the opposite position. It is extremely important for a person who is swimming alone to be able to call the pool lift when it is in the up position so he or she will not be stranded in the water for extended periods of time awaiting assistance. The requirement for a pool lift to be independently operable does not preclude assistance from being provided.

**A15.8.5.9 Lifting Capacity.** Single person pool lifts must be capable of supporting a minimum weight of 300 pounds and sustaining a static load of at least one and a half times the rated load. Pool lifts should be provided that meet the needs of the population it is serving. Providing a pool lift

**A15.8 Swimming Pools, Wading Pools and Spas**

| | |
|---|---|
| with a weight capacity greater than 300 pounds may be advisable.<br><br>**A15.8.6.1 Sloped Entries.** Personal wheelchairs and mobility devices may not be appropriate for submerging in water. Some may have batteries, motors, and electrical systems that when submerged in water may cause damage to the personal mobility device or wheelchair or may contaminate the pool water. Providing an aquatic wheelchair made of non-corrosive materials and designed for access into the water will protect the water from contamination and avoid damage to personal wheelchairs or other mobility aids.<br><br>**A15.8.6.3 Handrails.** Handrails on both sides of a sloped entry provides stability to both persons with mobility impairments and persons using wheelchairs. For safety reasons, a single handrail is permitted on sloped entries provided at wave action pools, leisure rivers, sand bottom pools, and other pools where user access is limited to one area.<br><br>**A15.8.8.4 Transfer Steps.** Where possible, the height of the transfer step should be as minimal as possible. This will decrease the distance an individual is required to lift up or move down to reach the next step to gain access.<br><br>**A15.8.8.7 Grab Bars.** Pool operators have the choice of providing a grab bar on one side of each step and transfer platform or a continuous grab bar on one side serving each transfer step and the transfer platform. If provided on each step, the top of the gripping surface must be 4 to 6 inches above each step. Where a continuous grab bar is provided, the top of the gripping surface must be 4 to 6 inches above the step nosing. Each type has its advantages. A continuous handrail allows the person that is transferring to maintain a constant grip on the handrail while moving up or down the transfer steps. Grab bars provided on each step provide the gripping surface parallel to each step rather than on a diagonal.<br><br>**A15.8.10 Water Play Components.** Personal wheelchairs and mobility devices may not be appropriate for submerging in water when accessing play components located in water. | Some may have batteries, motors, and electrical systems that when submerged in water may cause damage to the personal mobility device or wheelchair or may contaminate the water. Providing an aquatic wheelchair made of non-corrosive materials and designed for access into the water will protect the water from contamination and avoid damage to personal wheelchairs. |



[FR Doc. 02–21805 Filed 8–30–02; 8:45 am]
BILLING CODE 8150–01–C