Attainment of the remedial goal for fluoride of 4 mg/L in the groundwater at the Site was first reported in the results from the October 1998 monitoring event. Two additional monitoring events were performed after the initial attainment to ensure the fluoride in site groundwater met the remedial goal. The last sampling for fluoride was in July 2000.

Attainment of the remedial for cyanide of 0.2 mg/L in the groundwater at the Site was reported in the results from January 2000 monitoring event. Two additional monitoring events were performed after the initial attainment to ensure the cyanide in site groundwater met the remedial goal. The drinking water standard for cyanide is based on the amenable cyanide concentration. The last sampling for cyanide was in July 2000.

EPA, with concurrence of FDEP, has determined all appropriate actions at the BMI-Textron Site, have been completed, and no further remedial action is necessary. Water well permitting regulations continue to be administered through the South Florida Water Management Department, the Palm Beach County Health Department and FDEP.

Final Project Closeout Activities

Between January 31, 2001 and February 15, 2001, Arcadis, Geragthy & Miller completed a final site inspection and closeout activities to ensure all associated equipment and items used to complete the site remedy were removed from the property and properly disposed of or properly abandoned.

On January 31, 2001 Arcadis, Geragthy & Miller observed and documented the proper abandonment (grouting of wells with neat cement, using a tremie pipe, from the bottom of the well to land surface) of 7 of the 8 remaining on and off-site monitoring wells (3, 35R, 36A, 37, 38, MW–93–4 and MW–93–6) by a state-licensed drilling contractor. Monitoring well 10A was not abandoned because it is part of a three-well cluster initially installed / owned by the FDEP which may be useful for monitoring groundwater in the area of the nearby Transcircuit Superfund site. The steel protective casings extending above grade on two of the wells were cut off a few inches below grade and the ground surface re-paved.

On February 15, 2001, Arcadis, Geragthy & Miller observed and documented the removal of the two above-ground steel storage tanks (ASTs) from the property. These ASTs were used over the past several years for the storage of water purged from the monitoring wells.

Community Involvement

Public participation activities have been satisfied as required in CERCLA section 113(k), 42 U.S.C. 9613(k), and CERCLA section 117, 42 U.S.C. 9617. Documents in the deletion docket which EPA relied on for recommendation of the deletion from the NPL are available to the public in the information repositories.

V. Deletion Action

The EPA, with concurrence of the State of Florida, has determined all appropriate responses under CERCLA have been completed, and no further response actions under CERCLA are necessary. Therefore, EPA is deleting the Site from the NPL.

Because EPA considers this action to be noncontroversial and routine, EPA is taking it without prior publication. This action will be effective November 18, 2002, unless EPA receives adverse comments by October 21, 2002. If adverse comments are received within the 30-day public comment period, EPA will publish a timely withdrawal of this direct final notice of deletion before the effective date of the deletion and it will not take effect and, EPA will prepare a response to comments and continue with the deletion process on the basis of the notice of intent to delete and the comments already received. There will be no additional opportunity to comment.

List of Subjects in 40 CFR Part 300

Environmental protection, Air pollution control, Chemicals, Hazardous waste, Hazardous substances, Intergovernmental relations, Penalties, Reporting and recordkeeping requirements, Superfund, Water pollution control, Water supply.

Dated: July 19, 2002,

A. Stanley Meiburg,

Acting Regional Administrator, Region 4.

For the reasons set out in this document, 40 CFR part 300 is amended as follows:

PART 300—[AMENDED]

1. The authority citation for part 300 continues to read as follows:

Authority: 33 U.S.C. 1321(c)(2); 42 U.S.C. 9601–9657; E.O. 12777, 56 FR 54757, 3 CFR, 1991 Comp., p. 351; E.O. 12580, 52 FR 2923, 3 CFR, 1987 Comp., p. 193.

Appendix B—[Amended]

2. Table 1 of Appendix B to Part 300 is amended under Florida (FL) by removing the entry for ''BMI-Textron'' and the city ''Lake Park.''

[FR Doc. 02–23586 Filed 9–18–02; 8:45 am]

BILLING CODE 6560–50–P

DEPARTMENT OF TRANSPORTATION

National Highway Traffic Safety Administration

49 CFR Part 572

[Docket No. NHTSA–02–12541]

RIN 2127–AI00

Anthropomorphic Test Devices; Six-Year-Old Crash Test Dummy

AGENCY: National Highway Traffic Safety Administration (NHTSA), Department of Transportation.

ACTION: Final rule; correcting amendment.

SUMMARY: This document makes technical corrections to the final rule published in response to petitions for reconsideration on July 18, 2002. That rule amended an earlier rule, published on January 13, 2000, that had adopted a new, more advanced 6-year-old child dummy (HIII–6C). The changes made in today's notice consist of corrections of typographical errors in the table in the preamble, the addition of a revised Figure N5, and minor revisions in the weight and length specifications of the head skin and upper arm molded assembly, respectively.

DATES: *Effective Date:* The amendments made in this rule are effective August 19, 2002.

Petitions: Petitions for reconsideration must be received by November 4, 2002.

ADDRESSES: Petitions for reconsideration should refer to the docket and notice number of this document and be submitted to: Administrator, National Highway Traffic Safety Administration, 400 Seventh Street, SW., Washington, DC 20590.

FOR FURTHER INFORMATION CONTACT: For non-legal issues, you may call Stan Backaitis, Office of Crashworthiness Standards, at 202–366–4912.

For legal issues, you may call Rebecca MacPherson, Office of the Chief Counsel, at 202–366–2992.

You may send mail to both of these officials at National Highway Traffic Safety Administration, 400 Seventh St., SW., Washington, DC 20590.

SUPPLEMENTARY INFORMATION: NHTSA published a final rule on July 18, 2002 (67 FR 47321, Docket No. NHTSA–02–12541) that responded to various petitions for reconsideration of its

previous rule incorporating a new, Hybrid III 6-year-old child anthropomorphic test dummy (HIII–6C) into 49 CFR part 572. That final rule was published January 13, 2000 (65 FR 2059, Docket No. NHTSA–99–6714). The petitions were granted in part and denied in part.

Most of the issues raised in the petitions were minor and involved technical changes to either the dummy specifications or to the drawing package. In some cases, the petitioners had requested the specifications be tightened to ensure more accurate measurements in the tests in which the dummy is used to measure injury criteria. More significant issues were raised regarding the thoracic peak force criteria, the need for a specified mass moment of inertia (MMI) and resonant frequency of the impactors, and the need for a post-test calibration. Our review of the petitions also uncovered several minor errors in the drawings package that were resolved. All these issues were addressed in the July 18, 2002 final rule.

We are issuing a correcting amendment because that document contained a few technical errors. Namely, we inadvertently failed to submit the amended Figure N5 when the final rule was forwarded to the **Federal Register** for publication, and Table 1 of the preamble contained two typographical errors and two omissions. While Table 1 is not part of the regulatory text, and the changes to that table in this notice will have no effect on what is ultimately published in the Code of Federal Regulations, we have decided to amend the table since it provides a quick reference of those changes to the drawing package incorporated by reference into 49 CFR part 572, subpart N.

Changes in ''N'' Figures

As noted in the preamble to the July 2002 final rule, the following changes were made to the figures included as part of 49 CFR 572, subpart N to correct inaccuracies or ambiguities in those figures.

- Figure N2: (1) Relocate the 26.1 mm reference to the centerline of the posterior attachment bolt to reflect dimensional proportionality; (2) change reference from ''Neck Flexion Pendulum 46 CFR§ 572.33 FIG 22'' to ''Neck Flexion Pendulum 49 CFR 572.33 FIG 22''; and (3) add part number for bolt ''#9001265 Screw, SHCS #10–24 x 7/16''.
- Figure N3: (1) Relocate the 26.1 mm reference to the centerline of the posterior attachment bolt to reflect dimensional proportionality; and (2) add part number for bolt ''#9001265 Screw, SHCS #10–24 x 7/16''.
- Figure N5: Change bracket dimensions from ''89.9 mm (3.54 in) x 161.3 mm (6.35 in) x 31.8 mm (1.251 in)'' to ''90.4 mm (3.56 in) x 175.5 mm (6.91 in) x 31.8 mm (1.25 in)''.
- Figure N6: (1) Remove note SA572–S4; and (2) change the weight tolerance on the knee probe from ''0.82 ± 0.01 kg (1.80 ± .02 lb)'' to ''0.82 ± 0.02 kg (1.80 ± .05 lb)''.

No changes were made to Figure N1. Figure N1, rather than Figure N5 was inadvertently sent to the **Federal Register** as part of the final rule. Accordingly, the changes that were made to figure N5 do not appear in the revised regulatory text. Today's amendment corrects that error.

Errors and Corrections in Drawings

In responding to the petitions for reconsideration, several minor inconsistencies and call-out errors were noted either by petitioners or by agency staff in the review process. Accordingly, the changes that were made to the drawing package were noted in Table 1 of the final rule. That table contained two typographical errors, one under item 127–8210 and the other under item SA 572–S50, which are corrected here. Additionally, just before publication of the final rule, we discovered two errors in the drawings package that were not identified in Table 1: to wit, the head skin weight specification in drawing 127–1008 was changed from 1.78 ± .05 lbs to 1.55 ± .05 lbs, and the molded length specification for the upper arm molded assembly in drawing 127–5001 was revised from 5.24 in to 4.6 in. While these errors were not discussed in the final rule, they were corrected prior to publication of the final rule. Accordingly, both the drawings package sent to Reprographic Technologies and the one placed on public display at NHTSA technical reference library were correct. There is no need for purchasers of the drawing package to repurchase the package. Table 1 is recreated in whole so that readers may refer to a single, correct table.

TABLE 1

Drawing/part No.	Description	Revision description
127–SBL	6 year H3 standard build level	Deleted drawing.
SA572–127DRL–1	Drawing revision list	New drawing.
127-0000	Hybrid III 6 year old complete assembly.	Corrected location of ''I'' dimension (on sheet 5 of 6), all sheets revised to change letter''K''.
127–1008	6 year H3 head skin	Changed weight specification of head skin from 1.78 ± .05 lbs to 1.55 ± .05 lbs.
127–1009	Skin cap, skull	Added ''reference'' to item 1, corrected title.
127–2011	Sternum pad	Corrected angle dimensions.
127–2550	Chest-accelerometer assembly (SA572–S4).	Corrected accelerometer mount drawing number from 127–2110 to 127–2150.
127–4002	Upper leg flesh	Defined angular orientation of 0.5 dia. ''Posts''; Assigned missing hole diameters for load cell installation.
127–5001	6 year H3 upper arm molded assembly.	Changed upper arm molded length specification from 5.24 in. to 4.6 in.
127–8210	6 yr old abdominal insert	Changed dimension from 1.90 to 1.40 (notch depth), changed dimension 4.30 to 3.81 (overall height).
SA572–S4	Uniaxial piezorestive accelerometer.	Changed single decimal place tolerance from ± 0.1/2.54 to ± 0.1/2.5, corrected metric equivalents, and added dimensions.
SA572–S10	Femur load cell	Revised tolerance format, changed single decimal place tolerance from ± 0.1/2.54 to ± 0.1/2.5, changed reference note from ''Subpart E'' to ''Subpart N'', added material note, changed output at capacity from 1 mV/V min. to 0.75 mV/V min., added ''weight includes * * *'' note, and removed ''+'' from the Fz axis.
SA572–S11	Upper neck load cell	Revised tolerance format, changed single decimal place tolerance from ± 0.1/2.54 to ± 0.1/2.5, added material note, changed output at capacity from 1 mV/V min. to 0.75 mV/V min.

TABLE 1—Continued

Drawing/part No.	Description	Revision description
SA572–S12	Lumbar load cell	Changed hole dimension from 0.75/.1905 × .37/.89 to 0.63/16.0 × .35/8.9, changed weight from 1.3 lb/0.59 kg max to 1.35 lb/0.61 kg max, revised tolerance format, changed single decimal place tolerance from ± 0.1/2.54 to ± 0.1/2.5, changed reference note from ''Subpart E'' to ''Subpart N'', added material note, changed output at capacity from 1 mV/V min. to 0.75 mV/V min., added ''weight includes . . . '' note, and revised hole dimensions.
SA572–S13–L&R	Anterior-superior iliac spine load cell.	Changed output at capacity from 1 mV/V min. to 0.75 mV/V min., revised tolerance format, changed reference note from ''Subpart E'' to ''Subpart N'', added material note, changed single decimal place tolerance from ± 0.1/2.54 to ± 0.1/2.5, and added ''weight includes . . .'' note.
SA572–S26	Lower neck load cell	Revised tolerance format, changed single decimal place tolerance from ± 0.1/2.54 to ± 0.1/2.5, added material note, changed output at capacity from 1 mV/V min. to 0.75 mV/V min., added ''(does not include cables)'' to the weight note, added hole dimensions, and changed reference note from subpart E to subpart N.
SA572–S50	Chest potentiometer	Changed single decimal tolerance from ± 0.1/2.54 to ± 0.1/2.5, added/corrected metric equivalents, added ''Dia. Of hard shell housing'' and ''in rotary rigid shaft'' to notes, added ''signal connector pins'' note, and added ''locating'' and ''Dia.'' to pin note.
SA572–S80	S4 triaxial accelerometer mounting block.	Changed single decimal place tolerance from ± 0.1/2.54 to ± 0.1/2.5, corrected metric equivalents, revised hole note, and relocated holes.
TE–2208–001	Neck adapter bracket—6 year old	Added part #9001265 and note #3, changed single decimal place tolerance from ± 0.1/2.54 to ± 0.1/2.5.
9001373	Bushing, shoulder	New drawing.
9000000 & 6000000	Hardware used on 3YR. 6YR. & 5th female.	Added part #9001265, removed part #9001373.

Regulatory Analyses and Notices

Executive Order 12866 and DOT Regulatory Policies and Procedures

Executive Order 12866, ''Regulatory Planning and Review'' (58 FR 51735, October 4, 1993), provides for making determinations whether a regulatory action is ''significant'' and therefore subject to Office of Management and Budget (OMB) review and to the requirements of the Executive Order. The Order defines a ''significant regulatory action'' as one that is likely to result in a rule that may:

(1) Have an annual effect on the economy of $100 million or more or adversely affect in a material way the economy, a sector of the economy, productivity, competition, jobs, the environment, public health or safety, or State, local, or Tribal governments or communities;

(2) Create a serious inconsistency or otherwise interfere with an action taken or planned by another agency;

(3) Materially alter the budgetary impact of entitlements, grants, user fees, or loan programs or the rights and obligations of recipients thereof; or

(4) Raise novel legal or policy issues arising out of legal mandates, the President's priorities, or the principles set forth in the Executive Order.

We considered the impact of the July 18, 2002 rulemaking action under Executive Order 12866 and the Department of Transportation's regulatory policies and procedures. This rule is not considered a significant regulatory action under section 3(f) of the Executive Order 12866. Consequently, it was not reviewed by the Office of Management and Budget under E.O. 12866, ''Regulatory Planning and Review.'' The rulemaking action is also not considered to be significant under the Department's Regulatory Policies and Procedures (44 FR 11034, February 26, 1979). Today's notice does not impose any new requirements on manufacturers. It simply corrects typographical errors and adds information to a table that is not part of the regulatory text and adds the correct amended figure to the regulatory text.

Executive Order 13132

Executive Order 13132 requires NHTSA to develop an accountable process to ensure ''meaningful and timely input by State and local officials in the development of regulatory policies that have federalism implications.'' ''Policies that have federalism implications'' is defined in the Executive Order to include regulations that have ''substantial direct effects on the States, on the relationship between the national government and the States, or on the distribution of power and responsibilities among the various levels of government.'' Under Executive Order 13132, the agency may not issue a regulation with Federalism implications, that imposes substantial direct compliance costs, and that is not required by statute, unless the Federal government provides the funds necessary to pay the direct compliance costs incurred by State and local governments, the agency consults with State and local governments, or the agency consults with State and local officials early in the process of developing the proposed regulation. NHTSA also may not issue a regulation with Federalism implications and that preempts State law unless the agency consults with State and local officials early in the process of developing the proposed regulation. As explained above, today's notice will not have any additional economic impact on any entities.

Executive Order 13045

Executive Order 13045 (62 FR 19885, April 23, 1997) applies to any rule that: (1) is determined to be ''economically significant'' as defined under E.O. 12866, and (2) concerns an environmental, health or safety risk that NHTSA has reason to believe may have a disproportionate effect on children. If the regulatory action meets both criteria, we must evaluate the environmental health or safety effects of the planned rule on children, and explain why the planned regulation is preferable to other potentially effective and reasonably feasible alternatives considered by us.

This rule is not subject to the Executive Order because it is not economically significant as defined in E.O. 12866. It does indirectly involve decisions based on health risks that disproportionately affect children, namely, the risk of deploying air bags to children. However, this rulemaking

serves to help vehicle and air bag manufacturers to take steps to reduce that risk.

Executive Order 12778

Pursuant to Executive Order 12778, ''Civil Justice Reform,'' we have considered whether this rule will have any retroactive effect. This rule does not have any retroactive effect. A petition for reconsideration or other administrative proceeding will not be a prerequisite to an action seeking judicial review of this rule. This rule does not preempt the states from adopting laws or regulations on the same subject, except that it does preempt a state regulation that is in actual conflict with the federal regulation or makes compliance with the Federal regulation impossible or interferes with the implementation of the federal statute.

Regulatory Flexibility Act

Pursuant to the Regulatory Flexibility Act (5 U.S.C. 601 *et seq.*, as amended by the Small Business Regulatory Enforcement Fairness Act (SBREFA) of 1996) whenever an agency is required to publish a notice of rulemaking for any proposed or final rule, it must prepare and make available for public comment a regulatory flexibility analysis that describes the effect of the rule on small entities (*i.e.*, small businesses, small organizations, and small governmental jurisdictions). However, no regulatory flexibility analysis is required if the head of an agency certifies the rule will not have a significant economic impact on a substantial number of small entities. SBREFA amended the Regulatory Flexibility Act to require Federal agencies to provide a statement of the factual basis for certifying that a rule will not have a significant economic impact on a substantial number of small entities.

I have considered the effects of this rulemaking action under the Regulatory Flexibility Act (5 U.S.C. 601 *et seq.*) and certify that this proposal will not have a significant economic impact on a substantial number of small entities. The amendments made in this document will not affect the cost of the dummy. The rule does not impose or rescind any requirements for anyone. The Regulatory Flexibility Act does not, therefore, require a regulatory flexibility analysis.

National Environmental Policy Act

We have analyzed this amendment for the purposes of the National Environmental Policy Act and determined that it will not have any significant impact on the quality of the human environment.

Paperwork Reduction Act

Under the Paperwork Reduction Act of 1995, a person is not required to respond to a collection of information by a Federal agency unless the collection displays a valid OMB control number. This rule does not propose any new information collection requirements.

National Technology Transfer and Advancement Act

Section 12(d) of the National Technology Transfer and Advancement Act of 1995 (NTTAA), Public Law 104–113, section 12(d) (15 U.S.C. 272) directs us to use voluntary consensus standards in its regulatory activities unless doing so would be inconsistent with applicable law or otherwise impractical. Voluntary consensus standards are technical standards (*e.g.*, materials specifications, test methods, sampling procedures, and business practices) that are developed or adopted by voluntary consensus standards bodies, such as the Society of Automotive Engineers (SAE). The NTTAA directs us to provide Congress, through OMB, explanations when we decide not to use available and applicable voluntary consensus standards.

The H–III6C dummy that is the subject of this document was developed under the auspices of the SAE. All relevant SAE standards were reviewed as part of the development process. The following voluntary consensus standards have been used in developing the dummy:

- SAE Recommended Practice J211–1995, ''Instrumentation for Impact Tests—Parts 1 and 2'', dated March, 1995; and
- SAE J1733 Information Report, titled ''Sign Convention for Vehicle Crash Testing'', dated December 1994.

Unfunded Mandates Reform Act

Section 202 of the Unfunded Mandates Reform Act of 1995 (UMRA) requires Federal agencies to prepare a written assessment of the costs, benefits and other effects of proposed or final rules that include a Federal mandate likely to result in the expenditure by State, local or tribal governments, in the aggregate, or by the private sector, of more than $100 million in any one year (adjusted for inflation with base year of 1995). Before promulgating a NHTSA rule for which a written statement is needed, section 205 of the UMRA generally requires us to identify and consider a reasonable number of regulatory alternatives and adopt the least costly, most cost-effective or least burdensome alternative that achieves the objectives of the rule. The provisions of section 205 do not apply when they are inconsistent with applicable law. Moreover, section 205 allows us to adopt an alternative other than the least costly, most cost-effective or least burdensome alternative if we publish with the final rule an explanation why that alternative was not adopted.

This rule does not impose any unfunded mandates under the Unfunded Mandates Reform Act of 1995. This rule does not meet the definition of a Federal mandate because it does not impose requirements on anyone. Further, it will not result in costs of $100 million or more to either State, local, or tribal governments, in the aggregate, or to the private sector. The amendments made in this document will not affect the cost of the dummy. Thus, this rule is not subject to the requirements of sections 202 and 205 of the UMRA.

Regulation Identifier Number (RIN)

The Department of Transportation assigns a regulation identifier number (RIN) to each regulatory action listed in the Unified Agenda of Federal Regulations. The Regulatory Information Service Center publishes the Unified Agenda in April and October of each year. You may use the RIN contained in the heading at the beginning of this document to find this action in the Unified Agenda.

List of Subjects in 49 CFR Part 572

Incorporation by reference, Motor vehicle safety.

In consideration of the foregoing, NHTSA amends 49 CFR Part 572 as follows:

PART 572—ANTHROPOMORPHIC TEST DUMMIES

1. The authority citation for Part 572 continues to read as follows:

Authority: 49 U.S.C. 322, 30111, 30115, 30117 and 30166; delegation of authority at 49 CFR 1.50.

2. By revising Figure N5 to Subpart N to read as follows:

Figures to Subpart N

* * * * *

FIGURE N 5

TORSO FLEXION TEST SET-UP SPECIFICATIONS

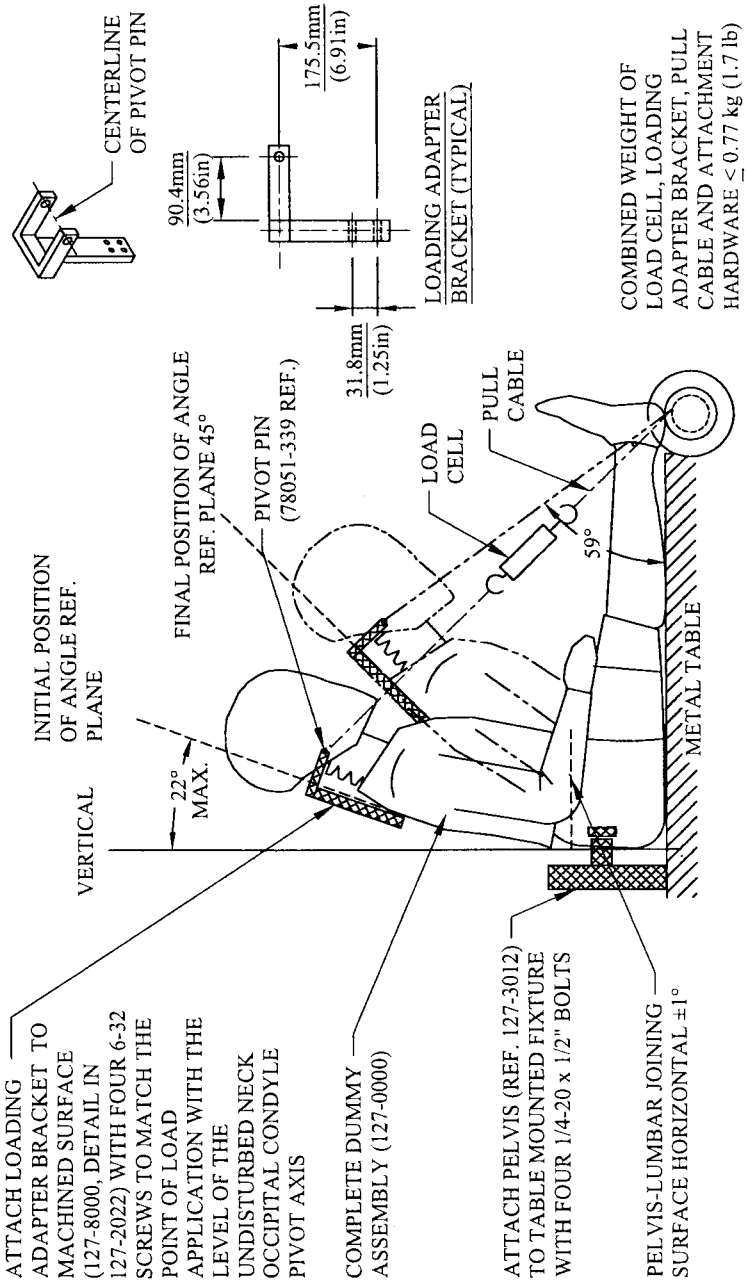

Issued: September 11, 2002.

Stephen R. Kratzke,

Associate Administrator for Rulemaking.

[FR Doc. 02–23512 Filed 9–18–02; 8:45 am]

BILLING CODE 4910–59–C