AUTHENTICATED
U.S. GOVERNMENT
INFORMATION
GPO

Federal Register

10–25–02 Friday
Vol. 67 No. 207 Oct. 25, 2002
Pages 65469–65688

The **FEDERAL REGISTER** is published daily, Monday through Friday, except official holidays, by the Office of the Federal Register, National Archives and Records Administration, Washington, DC 20408, under the Federal Register Act (44 U.S.C. Ch. 15) and the regulations of the Administrative Committee of the Federal Register (1 CFR Ch. I). The Superintendent of Documents, U.S. Government Printing Office, Washington, DC 20402 is the exclusive distributor of the official edition.

The **Federal Register** provides a uniform system for making available to the public regulations and legal notices issued by Federal agencies. These include Presidential proclamations and Executive Orders, Federal agency documents having general applicability and legal effect, documents required to be published by act of Congress, and other Federal agency documents of public interest.

Documents are on file for public inspection in the Office of the Federal Register the day before they are published, unless the issuing agency requests earlier filing. For a list of documents currently on file for public inspection, see http://www.nara.gov/fedreg.

The seal of the National Archives and Records Administration authenticates the Federal Register as the official serial publication established under the Federal Register Act. Under 44 U.S.C. 1507, the contents of the **Federal Register** shall be judicially noticed.

The **Federal Register** is published in paper and on 24x microfiche. It is also available online at no charge as one of the databases on GPO Access, a service of the U.S. Government Printing Office.

The online edition of the **Federal Register** is issued under the authority of the Administrative Committee of the Federal Register as the official legal equivalent of the paper and microfiche editions (44 U.S.C. 4101 and 1 CFR 5.10). It is updated by 6 a.m. each day the **Federal Register** is published and it includes both text and graphics from Volume 59, Number 1 (January 2, 1994) forward.

GPO Access users can choose to retrieve online **Federal Register** documents as TEXT (ASCII text, graphics omitted), PDF (Adobe Portable Document Format, including full text and all graphics), or SUMMARY (abbreviated text) files. Users should carefully check retrieved material to ensure that documents were properly downloaded.

On the World Wide Web, connect to the **Federal Register** at http://www.access.gpo.gov/nara. Those without World Wide Web access can also connect with a local WAIS client, by Telnet to swais.access.gpo.gov, or by dialing (202) 512–1661 with a computer and modem. When using Telnet or modem, type swais, then log in as guest with no password.

For more information about GPO Access, contact the GPO Access User Support Team by E-mail at gpoaccess@gpo.gov; by fax at (202) 512–1262; or call (202) 512–1530 or 1–888–293–6498 (toll free) between 7 a.m. and 5 p.m. Eastern time, Monday–Friday, except Federal holidays.

The annual subscription price for the **Federal Register** paper edition is $699, or $764 for a combined **Federal Register, Federal Register** Index and List of CFR Sections Affected (LSA) subscription; the microfiche edition of the **Federal Register** including the **Federal Register** Index and LSA is $264. Six month subscriptions are available for one-half the annual rate. The charge for individual copies in paper form is $10.00 for each issue, or $10.00 for each group of pages as actually bound; or $2.00 for each issue in microfiche form. All prices include regular domestic postage and handling. International customers please add 25% for foreign handling. Remit check or money order, made payable to the Superintendent of Documents, or charge to your GPO Deposit Account, VISA, MasterCard or Discover. Mail to: New Orders, Superintendent of Documents, P.O. Box 371954, Pittsburgh, PA 15250–7954.

There are no restrictions on the republication of material appearing in the **Federal Register.**

How To Cite This Publication: Use the volume number and the page number. Example: 67 FR 12345.

SUBSCRIPTIONS AND COPIES

PUBLIC	
Subscriptions:	
Paper or fiche	**202–512–1800**
Assistance with public subscriptions	**202–512–1806**
General online information	**202–512–1530; 1–888–293–6498**
Single copies/back copies:	
Paper or fiche	**202–512–1800**
Assistance with public single copies	**1–866–512–1800 (Toll-Free)**
FEDERAL AGENCIES	
Subscriptions:	
Paper or fiche	**202–741–6005**
Assistance with Federal agency subscriptions	**202–741–6005**

What's NEW!

Federal Register Table of Contents via e-mail

Subscribe to FEDREGTOC, to receive the **Federal Register** Table of Contents in your e-mail every day.

If you get the HTML version, you can click directly to any document in the issue.

To subscribe, go to **http://listserv.access.gpo.gov** and select:

Online mailing list archives
FEDREGTOC-L
Join or leave the list

Then follow the instructions.

Printed on recycled paper.

Contents

Federal Register

Vol. 67, No. 207

Friday, October 25, 2002

Agriculture Department
See Forest Service

Antitrust Division
NOTICES
National cooperative research notifications:
Ethernet in the First Mile Alliance, 65603

Blind or Severely Disabled, Committee for Purchase From People Who Are
See Committee for Purchase From People Who Are Blind or Severely Disabled

Census Bureau
NOTICES
Agency information collection activities:
Proposed collection; comment request, 65533–65534

Centers for Disease Control and Prevention
NOTICES
Agency information collection activities:
Proposed collection; comment request, 65579–65581

Centers for Medicare & Medicaid Services
RULES
Medicaid:
Managed care
Correction, 65504–65505
PROPOSED RULES
Medicare:
Medicare+Choice program—
Managed care modifications, 65671–65686
NOTICES
Agency information collection activities:
Proposed collection; comment request, 65581
Submission for OMB review; comment request, 65581–65582
Medicaid:
State allotments for payment of Medicare Part B premiums for qualifying individuals (2001 FY), 65582–65584
Medicare, Medicaid, and Clinical Laboratory Improvement Amendments programs:
National accreditation organizations; approval—
Joint Commission on Accreditation of Healthcare Organizations, 65585–65588
Meetings:
Medicare Education Advisory Panel, 65588–65589
Organization, functions, and authority delegations:
Beneficiary Choices Center and Research, Development, and Information Office, 65589–65590

Commerce Department
See Census Bureau
See Industry and Security Bureau
See International Trade Administration
See National Oceanic and Atmospheric Administration
NOTICES
Agency information collection activities:
Proposed collection; comment request, 65532
Submission for OMB review; comment request, 65532–65533

Committee for Purchase From People Who Are Blind or Severely Disabled
NOTICES
Agency information collection activities:
Proposed collection; comment request, 65530–65531
Procurement list; additions and deletions, 65531–65532

Consumer Product Safety Commission
NOTICES
Meetings; Sunshine Act, 65538

Defense Department
RULES
Acquisition regulations:
Caribbean Basin country; definition—
Honduras, 65514
Contracting officer qualifications, 65509
Enterprise software agreements, 65509–65512
Multiple award contracts; competition requirements for purchase of services, 65505–65509
Performance-based contracting, 65512–65514
PROPOSED RULES
Acquisition regulations:
Commercial items—
Transportation of supplies by sea, 65528–65529

Drug Enforcement Administration
NOTICES
Applications, hearings, determinations, etc.:
Polaroid Corp., 65604
Rhodes Technologies, 65604

Education Department
NOTICES
Agency information collection activities:
Proposed collection; comment request, 65538–65539

Employment and Training Administration
NOTICES
Agency information collection activities:
Proposed collection; comment request, 65604–65605

Employment Standards Administration
NOTICES
Agency information collection activities:
Proposed collection; comment request, 65605–65607
Minimum wages for Federal and federally-assisted construction; general wage determination decisions, 65607–65608

Energy Department
See Federal Energy Regulatory Commission
NOTICES
Environmental statements; availability, etc.:
Yucca Mountain; NV; spent nuclear fuel and high-level radioactive waste disposal; geologic repository, 65539–65542
Grants and cooperative agreements; availability, etc.:
Human Genome Program; ethical, legal, and social implications, 65542–65544
National Energy Technology Laboratory—
U.S. colleges and universities; advanced coal research, 65544–65549

Environmental Protection Agency
RULES
Air quality implementation plans; approval and promulgation; various States:
California, 65501–65504
PROPOSED RULES
Air quality implementation plans; approval and promulgation; various States:
California, 65526–65527
NOTICES
Agency information collection activities:
Proposed collection; comment request, 65563–65564
Committees; establishment, renewal, termination, etc.:
Clean Air Act Advisory Committee, 65564
Environmental statements; availability, etc.:
Agency statements—
Comment availability, 65565–65566
Weekly receipts, 65564–65565
Toxic and hazardous substances control:
Toxic chemical release reporting; community right-to-know; change of contractor handling trade secret claims; comment request, 65566–65568

Executive Office of the President
See Presidential Documents

Federal Aviation Administration
RULES
Air carrier certification and operations:
National parks air tour management, 65661–65669
Airworthiness directives:
Boeing, 65493–65495
Extra Flugzeugbau GmbH, 65479–65484
Pratt & Whitney, 65484–65493, 65495–65497
Airworthiness standards:
Special conditions—
Avions Marcel Dassault-Breguet Aviation Model Falcon 10 airplanes, 65473–65475
Boeing 727-100 and -200 series airplanes, 65477–65479
Bombardier Model CL-600-1A11 and CL-600-2A12 airplanes, 65475–65477
Class D airspace, 65497–65498
Class D and Class E airspace, 65498–65499
Class E5 airspace, 65499–65500
Class E airspace, 65499
PROPOSED RULES
Airmen certification:
Flight simulation device; initial and continuing qualification and use requirements
Correction, 65524–65526
Airworthiness directives:
Brackett, 65517–65519
Raytheon, 65519–65523
NOTICES
Meetings:
RTCA, Inc., 65631
Passenger facility charges; applications, etc.:
Austin Straubel International Airport, WI, 65631–65632
Duluth International Airport, MN, 65632

Federal Communications Commission
PROPOSED RULES
Common carrier services:
International Settlements Policy reform and international settlement rates, 65527–65528

Federal Deposit Insurance Corporation
NOTICES
Meetings; Sunshine Act, 65568

Federal Energy Regulatory Commission
NOTICES
Electric rate and corporate regulation filings:
FPL Energy Hancock County Wind, LLC, et al., 65558–65559
Environmental statements; availability, etc.:
ALLETE, Inc., 65559
Meetings:
Hydroelectric licensing process; forum, 65559–65560
Midwest Energy Infrastructure Conference, 65560–65561
Natural gas industry; policy issues; conference, 65561–65562
Practice and procedure:
Off-the-record communications, 65562–65563
Applications, hearings, determinations, etc.:
Algonquin LNG, Inc., 65549–65550
ANR Pipeline Co., 65550
ANR Storage Co., 65550
Blue Lake Gas Storage Co., 65551
Canyon Creek Compression Co., 65551
CenterPoint Energy-Mississippi River Transmission Corp., 65551
Central New York Oil & Gas Company, LLC, 65551–65552
Columbia Gas Transmission Corp.; correction, 65638
Eastern Shore Natural Gas Co., 65552
Garden Banks Gas Pipeline, LLC, 65552
Great Lakes Gas Transmission L.P., 65552–65553
High Island Offshore System, L.L.C., 65553
Horizon Pipeline Co., L.L.C., 65553
Kern River Gas Transmission Co., 65553–65554
Kinder Morgan Interstate Gas Transmission LLC, 65554
Maritimes & Northeast Pipeline, L.L.C., 65554–65555
Natural Gas Pipeline Co. of America, 65555
Steuben Gas Storage Co., 65555
Texas Gas Transmission Corp., 65555–65556
Trailblazer Pipeline Co., 65556
Transcontinental Gas Pipe Line Corp., 65556–65557
Venice Gathering System, L.L.C., 65557
Viking Gas Transmission Co., 65557
Williams Gas Pipelines Central, Inc., 65557–65558
Williston Basin Interstate Pipeline Co., 65558

Federal Housing Finance Board
NOTICES
Federal home loan bank system:
Committee support review; members selected for review; list, 65568–65579

Federal Law Enforcement Training Center
NOTICES
Environmental statements; notice of intent:
FLETC Glynco, GA facility; adjacent public roadways acquisition, 65637

Forest Service
NOTICES
Meetings:
Olympic Provincial Advisory Committee, 65530
Resource Advisory Committees—
Wrangell-Petersburg, 65530

Health and Human Services Department
See Centers for Disease Control and Prevention
See Centers for Medicare & Medicaid Services
See National Institutes of Health

Housing and Urban Development Department
NOTICES
Grants and cooperative agreements; availability, etc.:
Facilities to assist homeless—
Excess and surplus Federal property, 65593

Industry and Security Bureau
NOTICES
Meetings:
Sensors and Instrumentation Technical Advisory Committee, 65534

Interior Department
See National Park Service

International Trade Administration
NOTICES
Antidumping:
Barium carbonate from—
China, 65534–65537
Bulk aspirin from—
China, 65537–65538
Forged stainless steel flanges from—
India, 65538

International Trade Commission
NOTICES
Import investigations:
Polyvinyl alcohol from—
Various countries, 65597

Justice Department
See Antitrust Division
See Drug Enforcement Administration
NOTICES
Pollution control; consent judgments:
National Cooperative Refinery Association, 65597–65598
Privacy Act:
Systems of records, 65598
Reports and guidance documents; availability, etc.:
Jacob Wetterling Crimes Against Children and Sexually Violent Offender Registration Act; Campus Sex Crimes Prevention Act amendment, 65598–65603

Labor Department
See Employment and Training Administration
See Employment Standards Administration

Legal Services Corporation
NOTICES
Grant and cooperative agreement awards:
Civil legal services to low-income clients—
Michigan, 65608

Maritime Administration
NOTICES
Agency information collection activities:
Submission for OMB review; comment request, 65632–65633

National Aeronautics and Space Administration
NOTICES
Meetings:
Advisory Council
Earth Systems Science and Applications Advisory Committee, 65608–65609

National Archives and Records Administration
NOTICES
Agency records schedules; availability, 65609–65611

National Credit Union Administration
RULES
Credit unions:
Corporate credit unions—
Miscellaneous amendments, 65639–65659

National Institutes of Health
NOTICES
Agency information collection activities:
Proposed collection; comment request, 65590–65591
Meetings:
National Heart, Lung, and Blood Institute, 65591
National Institute of Dental and Craniofacial Research, 65591
Scientific Review Center, 65591–65593

National Oceanic and Atmospheric Administration
RULES
Fishery conservation and management:
West Coast States and Western Pacific fisheries—
West Coast salmon, 65514–65516
NOTICES
Reports and guidance documents; availability, etc.:
Coastal and Estuarine Land Conservation Program; correction, 65638

National Park Service
NOTICES
Environmental statements; availability, etc.:
Carl Sandburg Home National Historic Site, NC; general management plan, 65687–65688
Environmental statements; notice of intent:
Everglades National Park, FL; general management plan, 65594
National Register of Historic Places:
Pending nominations, 65594–65595
Native American human remains and associated funerary objects:
UCLA Fowler Museum of Cultural History, University of California, Los Angeles, CA—
Inventory from Rancho site, Riverside County, CA, 65595–65596
Williamson Museum, Northwestern State University, LA—
Inventory from Colfax Ferry site, Rapids Parish, LA, 65596–65597

Nuclear Regulatory Commission
NOTICES
Agency information collection activities:
Submission for OMB review; comment request, 65611–65612
Environmental statements; notice of intent:
South Carolina Electric & Gas Co., 65612–65613
Reports and guidance documents; availability, etc.:
Louisiana Energy Services gas centrifuge uranium enrichment facility, Hartsville, TN; white papers; comment request, 65613–65614

Overseas Private Investment Corporation
NOTICES
Meetings:
Africa Investment Advisory Council, 65614

Postal Service
RULES
Domestic Mail Manual:
Standard mail and periodicals letter-size and flat-size mail; simplified address format, 65500–65501

Presidential Documents
ADMINISTRATIVE ORDERS
Immigration; refugee admissions numbers and authorization (Presidential Determination No. 2003-02 of October 16, 2002), 65469–65470
Palestine Liberation Organization; waiver of statutory provisions (Presidential Determination No. 2003-03 of October 16, 2002), 65471

Public Health Service
See Centers for Disease Control and Prevention
See National Institutes of Health

Research and Special Programs Administration
NOTICES
Hazardous materials:
Exemption applications delayed; list, 65633–65634

Securities and Exchange Commission
NOTICES
Agency information collection activities:
Proposed collection; comment request, 65614–65615
Investment Company Act of 1940:
Exemption applications—
Corvis Corp., 65615–65617
Meetings; Sunshine Act, 65617
Self-regulatory organizations; proposed rule changes:
New York Stock Exchange, Inc.; correction, 65617–65618
Pacific Exchange, Inc., 65618–65620

Social Security Administration
NOTICES
Social security benefits:
Cost of living increase, SSI monthly benefit amounts increase, average of total wages, contribution and benefit base, etc., 65620–65625

State Department
NOTICES
Foreign passports validity; list of countries, 65625–65626
Grants and cooperative agreements; availability, etc.:
Future Leaders Exchange Program—
Disability Reentry Workshop, 65626–65628
Islamic Countries Youth Initiatives Academic Studies Program, 65628–65631

Surface Transportation Board
NOTICES
Agency information collection activities:
Proposed collection; comment request, 65634–65636
Rail carriers:
Waybill data; release for use, 65636–65637

Transportation Department
See Federal Aviation Administration
See Maritime Administration
See Research and Special Programs Administration
See Surface Transportation Board

Treasury Department
See Federal Law Enforcement Training Center

Separate Parts In This Issue

Part II
National Credit Union Administration, 65639–65659

Part III
Transportation Department, Federal Aviation Administration, 65661–65669

Part IV
Health and Human Services Department, Centers for Medicare & Medicaid Services, 65671–65686

Part V
Interior Department, National Park Service, 65687–65688

Reader Aids
Consult the Reader Aids section at the end of this issue for phone numbers, online resources, finding aids, reminders, and notice of recently enacted public laws.

To subscribe to the Federal Register Table of Contents LISTSERV electronic mailing list, go to http://listserv.access.gpo.gov and select Online mailing list archives, FEDREGTOC-L, Join or leave the list (or change settings); then follow the instructions.

CFR PARTS AFFECTED IN THIS ISSUE

A cumulative list of the parts affected this month can be found in the Reader Aids section at the end of this issue.

3 CFR

Administrative Orders:

Presidential Determinations:

No. 2003-02 of October 16, 2002 65469

No. 2003-03 of October 16, 2002 65471

12 CFR

703 65640

704 65640

14 CFR

25 (3 documents) 65473, 65475, 65477

39 (4 documents) 65479, 65484, 65493, 65495

71 (4 documents) 65497, 65498, 65499

91 65662

136 65662

Proposed Rules:

39 (2 documents) 65517, 65519

60 65524

39 CFR

111 65500

40 CFR

52 65501

Proposed Rules:

52 65526

42 CFR

431 65504

438 65504

Proposed Rules:

409 65672

417 65672

422 65672

47 CFR

Proposed Rules:

0 65527

43 65527

63 65527

64 65527

48 CFR

201 65509

208 (2 documents) 65505, 65509

212 65512

216 65505

226 65512

237 65512

239 65509

251 65509

252 (2 documents) 65509, 65514

Proposed Rules:

252 65528

50 CFR

660 65514

Federal Register
Vol. 67, No. 207
Friday, October 25, 2002

Presidential Documents

Title 3—

The President

Presidential Determination No. 03–02 of October 16, 2002

Presidential Determination on FY 2003 Refugee Admissions Numbers and Authorizations of In-Country Refugee Status

Memorandum for the Secretary of State

In accordance with section 207 of the Immigration and Nationality Act (the ''Act'') (8 U.S.C. 1157), as amended, and after appropriate consultations with the Congress, I hereby make the following determinations and authorize the following actions:

The admission of up to 70,000 refugees to the United States during FY 2003 is justified by humanitarian concerns or is otherwise in the national interest; provided, however, that this number shall be understood as including persons admitted to the United States during FY 2003 with Federal refugee resettlement assistance under the Amerasian immigrant admissions program, as provided below.

The 70,000 admissions numbers shall be allocated among refugees of special humanitarian concern to the United States in accordance with the following regional allocations; provided, however, that the number allocated to the East Asia region shall include persons admitted to the United States during FY 2003 with Federal refugee resettlement assistance under section 584 of the Foreign Operations, Export Financing, and Related Programs Appropriations Act of 1988, as contained in section 101(e) of Public Law 100–202 (Amerasian immigrants and their family members); provided further that the number allocated to the former Soviet Union shall include persons admitted who were nationals of the former Soviet Union, or in the case of persons having no nationality, who were habitual residents of the former Soviet Union, prior to September 2, 1991:

Africa	20,000
East Asia	4,000
Eastern Europe	2,500
Former Soviet Union	14,000
Latin America/Caribbean	2,500
Near East/South Asia	7,000
Unallocated Reserve	20,000

The 20,000 unallocated numbers shall be allocated as needed to regional ceilings where shortfalls develop. Unused admissions numbers allocated to a particular region may be transferred to one or more other regions if there is an overriding need for greater numbers for the region or regions to which the numbers are being transferred. You are hereby authorized and directed to consult with the Judiciary Committees of the Congress prior to any such use of the unallocated numbers or reallocation of numbers from one region to another.

Pursuant to section 2(b)(2) of the Migration and Refugee Assistance Act of 1962, as amended, I hereby determine that assistance to or on behalf of persons applying for admission to the United States as part of the overseas refugee admissions program will contribute to the foreign policy interests of the United States and designate such persons for this purpose.

An additional 10,000 refugee admissions numbers shall be made available during FY 2003 for the adjustment to permanent resident status under section 209(b) of the Immigration and Nationality Act (8 U.S.C. 1159(b)) of aliens

who have been granted asylum in the United States under section 208 of the Act (8 U.S.C. 1158), as this is justified by humanitarian concerns or is otherwise in the national interest.

In accordance with section 101(a)(42) of the Act (8 U.S.C. 1101(a)(42)) and after appropriate consultation with the Congress, I also specify that, for FY 2003, the following persons may, if otherwise qualified, be considered refugees for the purpose of admission to the United States within their countries of nationality or habitual residence:

a. Persons in Vietnam

b. Persons in Cuba

c. Persons in the former Soviet Union

You are authorized and directed to report this determination to the Congress immediately and to publish it in the **Federal Register**.

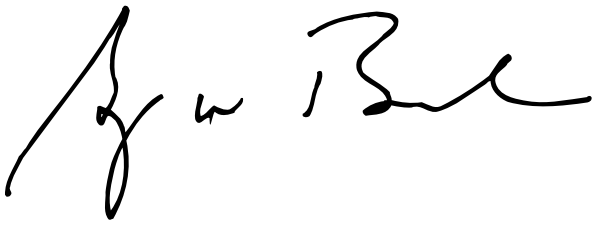

THE WHITE HOUSE,
Washington, October 16, 2002.

[FR Doc. 02–27365
Filed 10–24–02; 8:45 am]
Billing code 4710–10–P

Presidential Documents

Presidential Determination No. 03–03 of October 16, 2002

Waiver and Certification of Statutory Provisions Regarding the Palestine Liberation Organization

Memorandum for the Secretary of State

Pursuant to the authority and conditions contained in section 534(d) of the Foreign Operations, Export Financing, and Related Programs Appropriations Act, 2002, Public Law 107–115, as provided for in the Joint Resolution Making Continuing Appropriations for the Fiscal Year 2003, and for other purposes, Public Law 107–240. I hereby determine and certify that it is important to the national security interests of the United States to waive the provisions of section 1003 of the Anti-Terrorism Act of 1987, Public Law 100–204.

This waiver shall be effective for a period of 6 months from the date hereof. You are hereby authorized and directed to transmit this determination to the Congress and to publish it in the **Federal Register**.

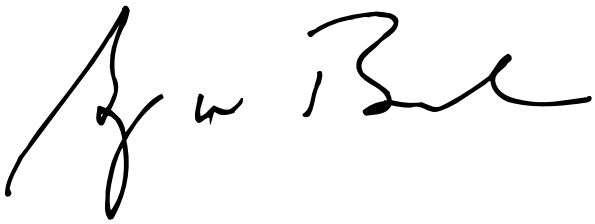

THE WHITE HOUSE,
Washington, October 16, 2002.

[FR Doc. 02–27366
Filed 10–24–02; 8:45 am]
Billing code 4710–10–P

Rules and Regulations

Federal Register
Vol. 67, No. 207
Friday, October 25, 2002

This section of the FEDERAL REGISTER contains regulatory documents having general applicability and legal effect, most of which are keyed to and codified in the Code of Federal Regulations, which is published under 50 titles pursuant to 44 U.S.C. 1510.

The Code of Federal Regulations is sold by the Superintendent of Documents. Prices of new books are listed in the first FEDERAL REGISTER issue of each week.

DEPARTMENT OF TRANSPORTATION

Federal Aviation Administration

14 CFR Part 25

[Docket No. NM234; Special Conditions No. 25–218–SC]

Special Conditions: Avions Marcel Dassault—Breguet Aviation, Falcon 10; High-Intensity Radiated Fields (HIRF)

AGENCY: Federal Aviation Administration (FAA), DOT.

ACTION: Final special conditions; request for comments.

SUMMARY: These special conditions are issued for the Avions Marcel Dassault—Breguet Aviation Falcon 10 airplane modified by Garrett Aviation Services. This modified airplane will have a novel or unusual design feature when compared to the state of technology envisioned in the airworthiness standards for transport category airplanes. The modification incorporates the installation of a Universal Avionics EFI–550 Flat Panel Flight Display System that performs critical functions. The applicable airworthiness regulations do not contain adequate or appropriate safety standards for the protection of these systems from the effects of high-intensity-radiated fields (HIRF). These special conditions contain the additional safety standards that the Administrator considers necessary to establish a level of safety equivalent to that established by the existing airworthiness standards.

DATES: The effective date of these special conditions is October 11, 2002. Comments must be received on or before November 25, 2002.

ADDRESSES: Comments on these special conditions may be mailed in duplicate to: Federal Aviation Administration, Transport Airplane Directorate, Attn: Rules Docket (ANM–113), Docket No. NM234, 1601 Lind Avenue SW., Renton Washington, 98055–4056; or delivered in duplicate to the Transport Directorate at the above address. All comments must be marked: Docket No. NM234. Comments may be inspected in the Rules Docket weekdays, except Federal holidays, between 7:30 a.m. and 4 p.m.

FOR FURTHER INFORMATION CONTACT: Meghan Gordon, FAA, Standardization Branch, ANM–113, Transport Airplane Directorate, Aircraft Certification Service, 1601 Lind Avenue SW., Renton, Washington 98055–4056; telephone (425) 227–2138; facsimile (425) 227–1149.

SUPPLEMENTARY INFORMATION:

Comments Invited

The FAA has determined that notice and opportunity for prior public comment hereon is impracticable, because these procedures would significantly delay certification of the airplane, which is imminent. In addition, as the substance of these special conditions has been subject to the public comment process in several prior instances with no substantive comments received. The FAA therefore finds that good cause exists for making these special conditions effective upon issuance; however, the FAA invites interested persons to participate in this rulemaking by submitting such written comments, data, or views, as they may desire. The most helpful commits reference a specific portion of the special conditions, explain the reason for any recommended change, and include supporting data. We ask that you send us two copies of written comments.

We will file in the docket all comments we receive, as well as a report summarizing each substantive public contact with FAA personnel concerning these special conditions. The docket is available for public inspection before and after the commit closing date. If you wish to review the docket in person, go to the address in the **ADDRESSES** section of this preamble between 7:30 a.m. and 4 p.m., Monday through Friday, except Federal holidays.

We will consider all comments we receive on or before the closing date for comments. We will consider comments filed late if it is possible to do so without incurring expense or delay. We may change these special conditions in light of the comments we receive.

If you want the FAA to acknowledge receipt of your comments on this proposal, include with your comments a pre-addressed, stamped postcard on which the docket number appears. We will stamp the date on the postcard and mail it back to you.

Background

On September 6, 2002, Garrett Aviation Services, 1200 North Airport Drive, Capital Airport Springfield, IL 62707, applied for a Supplemental Type Certificate (STC) to modify the Avions Marcel Dassault—Breguet Aviation Falcon 10 airplane approved under Type Certificate No. A33EU. The AMD/BA Falcon 10 is a transport category airplane. The AMD/BA Falcon 10 airplane is powered by two Airesearch Manufacturing Company TFE731–2–1C turbofans with a maximum takeoff weight of 18,300 pounds. This airplane operates with a 2-pilot crew and can hold up to 9 passengers. The modification incorporates the installation of dual Universal Avionics EFI–550 Flat Panel Flight Displays. The EFI–550 Display System is installed as a replacement for the existing mechanical ADI and HSI display instruments, while also providing additional functional capability and redundancy. The EFI–550 Display System is microprocessor based digital, flat panel display which adapts analog input signals to digital information when interfaced with the existing flight director and flight guidance system. The avionics/electronics and electrical systems installed in this airplane have the potential to be vulnerable to high-intensity radiated fields (HIRF) external to the airplane.

Type Certification Basis

Under the provisions of 14 CFR 21.101, Amendment 21–69, effective September 16, 1991, Garrett Aviation Services must show that the AMD/BA Falcon 10 airplane, as changed, continues to meet the applicable provisions of the regulations incorporated by reference in Type Certificate No. A33EU, or the applicable regulations in effect on the date of application for the change. The regulations incorporated by reference in the type certificate are commonly referred to as the ''original type certification basis.'' The certification basis for the modified AMD/BA Falcon

10 airplane includes 14 CFR part 25, dated February 1, 1964, as amended by Amendments 25–1 through 25–20, except for special conditions and exceptions noted in Type Certificate Data Sheet (TDCS) A33EU.

If the Administrator finds that the applicable airworthiness regulations (that is, part 25, as amended) do not contain adequate or appropriate safety standards for the AMD/BA Falcon 10 airplane because of novel or unusual design features, special conditions are prescribed under the provisions § 21.16

In addition to the applicable airworthiness regulations and special conditions, the AMD/BA Falcon 10 airplane must comply with the noise certification requirement of 14 CFR part 36.

Special conditions, as defined in 14 CFR 11.19, are issued in accordance with § 11.38 and become part of the type certification basis in accordance with § 21.101(b)(2), Amendment 21–69, effective September 16, 1991.

Special conditions are initially applicable to the model for which they are issued. Should Garrett Aviation Services apply for a supplemental type certificate to modify any other model included on the same type certificate to incorporate the same novel or unusual design feature, these special conditions would also apply to the other model under the provisions of § 21.101(a)(1), Amendment 21–69, effective September 16, 1991.

Novel or Unusual Design Features

As noted earlier, the AMD/BA Falcon 10 airplane modified by Garrett Aviation Services will incorporate Universal Avionics EFI–550 Flat Panel Flight Displays that will perform critical functions. These systems have to potential to be vulnerable to HIRF external to the airplane. The current airworthiness standards of part 25 do not contain adequate or appropriate safety standards that address the protection of this equipment from the adverse effect of HIRF. Accordingly, this system is considered to be a novel or unusual design feature.

Discussion

There is no specific regulation that addresses protection requirements for electrical and electronic systems from HIRF. Increased power levels from ground-based radio transmitters and the growing use of sensitive avionics/electronics and electrical systems to command and control airplanes have made it necessary to provide adequate protection.

To ensure that a level of safety is achieved that is equivalent to that intended by the regulations incorporated by reference, special conditions are needed for the AMD/BA Falcon 10 airplane modified by Garrett Aviation Services. These special conditions require that new avionics/electronics and electrical systems that perform critical functions be designed and installed to preclude component damage and interruption of function due to both the direct and indirect effects of HIRF.

High-Intensity Radiated Fields (HIRF)

With the trend toward increased power levels from ground-based transmitters and the advent of space and satellite communications, coupled with electronic command and control of the airplane, the immunity of critical avionics/electronics and electrical systems to HIRF must be established.

It is not possible to precisely define the HIRF to which the airplane will be exposed in service. There is also uncertainty concerning the effectiveness of airframe shielding for HIRF. Furthermore, coupling of electromagnetic energy to cockpit-installed equipment through the cockpit window apertures is undefined. Based on surveys and analysis of existing HIRF emitters, an adequate level of protection exists when compliance with the HIRF protection special condition is shown with either paragraph 1, OR 2 below:

1. A minimum threat of 100 volts rms (root-mean-square) per meter electric field strength from 10KHz to 18GHz.

a. The threat must be applied to the system elements and their associated wiring harnesses without the benefit of airframe shielding.

b. Demonstration of this level of protection is established through system tests and analysis.

2. A threat external to the airframe of the following field strengths for the frequency ranges indicated. Both peak and average field strength components from the table are to be demonstrated.

Frequency	Field strength (volts per meter)	
	Peak	Average
10 kHz–100 kHz	50	50
100 kHz–500 kHz	50	50
500 kHz–2 MHz	50	50
2 MHz–30 MHz	100	100
30 MHz–70 MHz	50	50
70 MHz–100 MHz	50	50
100 MHz–200 MHz	100	100
200 MHz–400 MHz	100	100
400 MHz–700 MHz	700	50
700 MHz–1 GHz	700	100
1 GHz–2 GHz	2000	200
2 GHz–4 GHz	3000	200
4 GHz–6 GHz	3000	200
6 GHz–8 GHz	1000	200
8 GHz–12 GHz	3000	300
12 GHz–18 GHz	2000	200
18 GHz–40 GHz	600	200

The field strengths are expressed in terms of peak of the root-mean-square (rms) over the complete modulation period.

The threat levels identified above are the result of an FAA review of existing studies on the subject of HIRF, in light of the ongoing work of the Electromagnetic Effects Harmonization Working Group of the Aviation Rulemaking Advisory Committee.

Applicability: As discussed above, these special conditions are applicable to the AMD/BA Falcon 10 airplane modified by Garret Aviation Services. Should Garrett Aviation Services apply at a later date for a supplemental type certificate to modify any other model included on the same type certificate to incorporate the same novel or unusual design feature, these special conditions would apply to that model as well under the provisions of § 21.101(a)(2), Amendment 21–69, effective September 16, 1991.

Conclusion

This action affects only certain novel or unusual design features on the AMD/BA Falcon 10 airplanes modified by Garrett Aviation Services. It is not a rule of general applicability and affects only the applicant who applied to the FAA for approval of these features on the airplane.

The substance of these special conditions has been subjected to the notice and comment period in several prior instances and has been derived without substantive change from those previously issued. Because a delay would significantly affect the certification of the airplane, which is imminent, the FAA has determined that prior public notice and comment are unnecessary and impracticable, and that good cause exists for adopting these special conditions upon issuance. The FAA is requesting comments to allow interested persons to submit views that may not have been submitted in response to the prior opportunities for comment described above. 3

List of Subjects in 14 CFR Part 25

Aircraft, Aviation safety, Reporting and recordkeeping requirements.

The authority citation for these special conditions is as follows:

Authority: 49 U.S.C. 106(g), 40113, 44701, 44702, 44704.

The Special Conditions

Accordingly, pursuant to the authority delegated to me by the Administrator, the following special conditions are issued as part of the supplemental type certification basis for the Avions Marcel Dassault—Breguet Aviation, Falcon 10 airplanes modified by Garrett Aviation Services.

1. *Protection from Unwanted Effects of High-Intensity Radiated Fields (HIRF).* Each electrical and electronic system that performs critical functions must be designed and installed to ensure that the operation and operational capability of these systems to perform critical functions are not adversely affected when the airplane is exposed to high-intensity radiated fields.

2. For the purpose of these special conditions, the following definition applies:

Critical Functions: Functions whose failure would contribute to or cause a failure condition that would prevent the continued safe flight and landing of the airplane.

Issued in Renton, Washington on October 11, 2002.

Ali Bahrami,

Acting Manager, Transport Airplane Directorate, Aircraft Certification Service.

[FR Doc. 02–27175 Filed 10–24–02; 8:45 am]

BILLING CODE 4910–13–P

DEPARTMENT OF TRANSPORTATION

Federal Aviation Administration

14 CFR Part 25

[Docket No. NM236; Special Conditions No. 25–220–SC]

Special Conditions: Bombardier Model CL–600–1A11 and CL–600–2A12 Airplanes; High-Intensity Radiated Fields (HIRF)

AGENCY: Federal Aviation Administration (FAA), DOT.

ACTION: Final special conditions; request for comments.

SUMMARY: These special conditions are issued for Bombardier Model CL–600–1A11 and CL–600–2A12 airplanes modified by Gulfstream Aerospace Corporation. These modified airplanes will have a novel or unusual design feature when compared to the state of technology envisioned in the airworthiness standards for transport category airplanes. The modification incorporates the installation of a Rockwell Collins FDS–2000 Electronic Display System that performs critical functions. The applicable airworthiness regulations do not contain adequate or appropriate safety standards for the protection of this system from the effects of high-intensity radiated fields (HIRF). These special conditions contain the additional safety standards that the Administrator considers necessary to establish a level of safety equivalent to that established by the existing airworthiness standards.

DATES: The effective date of these special conditions is October 11, 2002. Comments must be received on or before November 25, 2002.

ADDRESSES: Comments on these special conditions may be mailed in duplicate to: Federal Aviation Administration, Transport Airplane Directorate, Attention: Rules Docket (ANM–113), Docket No. NM236, 1601 Lind Avenue SW., Renton, Washington 98055–4056; or delivered in duplicate to the Transport Airplane Directorate at the above address. All comments must be marked: Docket No. NM236. Comments may be inspected in the Rules Docket weekdays, except Federal holidays, between 7:30 a.m. and 4 p.m.

FOR FURTHER INFORMATION CONTACT: Connie Beane, FAA, Standardization Branch, ANM–113, Transport Airplane Directorate, Aircraft Certification Service, 1601 Lind Avenue SW., Renton, Washington 98055–4056; telephone (425) 227–2796; facsimile (425) 227–1100.

SUPPLEMENTARY INFORMATION:

Comments Invited

The FAA has determined that notice and opportunity for prior public comment hereon are impracticable because these procedures would significantly delay certification, and thus delivery, of the affected airplane. In addition, the substance of these special conditions has been subject to the public comment process in several prior instances with no substantive comments received. The FAA therefore finds that good cause exists for making these special conditions effective upon issuance; however, the FAA invites interested persons to participate in this rulemaking by submitting written comments, data, or views. The most helpful comments reference a specific portion of the special conditions, explain the reason for any recommended change, and include supporting data. We ask that you send us two copies of written comments.

We will file in the docket all comments we receive, as well as a report summarizing each substantive public contact with FAA personnel concerning these special conditions. The docket is available for public inspection before and after the comment closing date. If you wish to review the docket in person, go to the address in the **ADDRESSES** section of this preamble between 7:30 a.m. and 4 p.m., Monday through Friday, except Federal holidays.

We will consider all comments we receive on or before the closing date for comments. We will consider comments filed late if it is possible to do so without incurring expense or delay. We may change these special conditions in light of the comments we receive.

If you want the FAA to acknowledge receipt of your comments on this proposal, include with your comments a pre-addressed, stamped postcard on which the docket number appears. We will stamp the date on the postcard and mail it back to you.

Background

On July 31, 2002, Gulfstream Aerospace Corporation, Dallas, Texas, applied for a supplemental type certificate (STC) to modify Bombardier Model CL–600–1A11 and CL–600–2A12 airplanes. These airplanes are low-wing, pressurized transport category airplanes with two fuselage-mounted jet engines. They are capable of seating a maximum of 19 passengers, depending upon the configuration. The modification incorporates the installation of a Rockwell Collins FDS–2000 five ''tube'' Electronic Display System consisting of the following major components:

- Five (5) AFD–2000A Adaptive Flight Displays: Pilot Electronic Attitude Indicator (EADI), Pilot Electronic Horizontal Situation Indicator (EHSI), Multi-Function Display (MFD), Copilot EADI, Copilot EHSI.
- Three (3) DCP–2000 Display Control Panels: Pilot, MFD, Copilot.
- Two (2) DCU–2000 Data Concentrator Units.

This system has a potential to be vulnerable to high-intensity radiated fields (HIRF) external to the airplane.

Type Certification Basis

Under the provisions of 14 CFR 21.101, Amendment 21–69, effective September 16, 1991, Gulfstream Aerospace Corporation must show that Bombardier Model CL–600–1A11 and CL–600–2A12 airplanes, as modified to include installation of the Rockwell Collins FDS–2000 Electronic Display System, continue to meet the applicable provisions of the regulations incorporated by reference in Type Certificate No. A21EA or the applicable regulations in effect on the date of application for the change. Subsequent changes have been made to § 21.101 as

part of Amendment 21–77, but those changes do not become effective until June 10, 2003. The regulations incorporated by reference in the type certificate are commonly referred to as the ''original type certification basis.'' The specific regulations included in the certification basis for Bombardier Model CL–600–1A11 and CL–600—A12 airplanes include 14 CFR part 25, dated February 1, 1965, including amendments 25–1 through 25–37, and sections 25.675(a), 25.685(a), 25.733(c), 25.775(e), 25.787(c), 25.815, 25.841(b), 25.951(a), 25.979(d) and (e), 25.1041, 25.1143(e), 25.1303(a), 25.1322, 25.1385(c), 25.1557(b), and 25.1583(a) of Amendment 25–38; sections 25.901(b) and (c), 25.903(c) and (e), 25.933(a), 25.943, 25.959, 25.1091(a) and (d), 25.1145(c), 25.1199(b) and (c), 25.1207, 25.1549, and 25.1585(a)(9) of Amendment 25–40; and section 25.1309 of Amendment 25–41; section 25.1353(c) of Amendment 25–42; section 25.571 and 25.629(d)(4)(v) of Amendment 25–45; and sections 25.351 and 25.603 of Amendment 25–46.

If the Administrator finds that the applicable airworthiness regulations (*i.e.,* 14 CFR part 25, as amended) do not contain adequate or appropriate safety standards for the Bombardier Model CL–600–1A11 and CL–600–2A12 airplanes because of a novel or unusual design feature, special conditions are prescribed under the provisions of § 21.16.

Special conditions, as defined in 14 CFR 11.19, are issued in accordance with § 11.38 and become part of the airplane's type certification basis in accordance with § 21.101(b)(2), Amendment 21–69, effective September 16, 1991.

Special conditions are initially applicable to the model for which they are issued. Should Gulfstream Aerospace Corporation apply at a later date for a supplemental type certificate to modify any other model included on the same type certificate to incorporate the same novel or unusual design feature, these special conditions would also apply to the other model under the provisions of § 21.101(a)(1), Amendment 21–69, effective September 16, 1991.

Novel or Unusual Design Features

As noted earlier, Bombardier Model CL–600–1A11 and CL–600–2A12 airplanes modified by Gulfstream Aerospace Corporation will incorporate the Rockwell Collins FDS–2000 Electronic Display System that will perform critical functions. This system may be vulnerable to high-intensity radiated fields external to the airplane. The current airworthiness standards of part 25 do not contain safety standards adequate or appropriate to protect this equipment from the adverse effects of HIRF. Accordingly, this system is considered to be a novel or unusual design feature.

Discussion

There is no specific regulation that addresses protection requirements for electrical and electronic systems from HIRF. Increased power levels from ground-based radio transmitters and the growing use of sensitive avionics/electronics and electrical systems to command and control airplanes have made it necessary to provide such protection.

To ensure that a level of safety is achieved that is equivalent to that intended by the regulations which are incorporated by reference, special conditions are needed for Bombardier Model CL–600–1A11 and CL–600–2A12 airplanes modified by Gulfstream Aerospace Corporation. These special conditions will require that the Rockwell Collins FDS–2000 Electronic Display System, which perform critical functions, be designed and installed to preclude component damage and interruption of function due to the direct and indirect effects of HIRF.

High-Intensity Radiated Fields (HIRF)

With the trend toward increased power levels from ground-based transmitters and the advent of space and satellite communications, coupled with electronic command and control of the airplane, the immunity of critical digital avionics/electronics and electrical systems to HIRF must be established.

It is not possible to precisely define the HIRF to which the airplane will be exposed in service. There is also uncertainty concerning the effectiveness of airframe shielding for HIRF. Furthermore, coupling of electromagnetic energy to cockpit-installed equipment through the cockpit window apertures is undefined. Based on surveys and analysis of existing HIRF emitters, an adequate level of protection exists when compliance with the HIRF protection special condition is shown with either paragraph 1 or 2 below:

1. A minimum threat of 100 volts rms (root mean square) per meter electric field strength from 10 KHz to 18 GHz.

a. The threat must be applied to the system elements and their associated wiring harnesses without the benefit of airframe shielding.

b. Demonstration of this level of protection is established through system tests and analysis.

2. A threat external to the airframe of the field strengths indicated in the table below for the frequency ranges indicated. Both peak and average field strength components from the table are to be demonstrated.

Frequency	Field strength (volts per meter)	
	Peak	Average
10 kHz–100 kHz	50	50
100 kHz–500 kHz	50	50
500 kHz–2 MHz	50	50
2 MHz–30 MHz	100	100
30 MHz–70 MHz	50	50
70 MHz–100 MHz	50	50
100 MHz–200 MHz	100	100
200 MHz–400 MHz	100	100
400 MHz–700 Mhz	700	50
700 MHz–1 GHz	700	100
1GHz–2 GHz	2000	200
2 GHz–4 GHz	3000	200
4 GHz–6 GHz	3000	200
6 GHz–8 GHz	1000	200
8 GHz–12 GHz	3000	300
12 GHz–18 GHz	2000	200
18 GHz–40 GHz	600	200

The field strengths are expressed in terms of peak of the root-mean-square (rms) over the complete modulation period.

The threat levels identified above are the result of an FAA review of existing studies on the subject of HIRF, in light of the ongoing work of the Electromagnetic Effects Harmonization Working Group of the Aviation Rulemaking Advisory Committee.

Applicability: As discussed above, these special conditions are applicable to Bombardier Model CL–600–1A11 and CL–600–2A12 airplanes modified by Gulfstream Aerospace Corporation to incorporate the Rockwell Collins FDS–2000 Electronic Display System. Should Gulfstream Aerospace Corporation apply at a later date for a supplemental type certificate to modify any other model included on Type Certificate A21EA to incorporate the same novel or unusual design feature, these special conditions would apply to that model as well under the provisions of § 21.101(a)(1), Amendment 21–69, effective September 16, 1991.

Conclusion

This action affects only certain design features on Bombardier Model CL–600–1A11 and CL–600–A12 airplanes modified by Gulfstream Aerospace Corporation to incorporate a Rockwell Collins FDS–2000 Electronic Display System. It is not a rule of general applicability and affects only the applicant which applied to the FAA for approval of these features on the airplanes.

The substance of the special conditions for these airplanes has been subjected to the notice and comment procedure in several prior instances and has been derived without substantive change from those previously issued. Because a delay would significantly affect the certification of the airplane, which is imminent, the FAA has determined that prior public notice and comment are unnecessary and impracticable, and good cause exists for adopting these special conditions upon issuance. The FAA is requesting comments to allow interested persons to submit views that may not have been submitted in response to the prior opportunities for comment described above.

List of Subjects in 14 CFR Part 25

Aircraft, Aviation safety, Reporting and recordkeeping requirements.

The authority citation for these special conditions is as follows:

Authority: 49 U.S.C. 106(g), 40113, 44701, 44702, 44704.

The Special Conditions

Accordingly, pursuant to the authority delegated to me by the Administrator, the following special conditions are issued as part of the supplemental type certification basis for Bombardier Model CL–600–1A11 and CL–600–2A12 airplanes as modified by Gulfstream Aerospace Corporation.

1. *Protection from Unwanted Effects of High-Intensity Radiated Fields (HIRF).* Each electrical and electronic system that performs critical functions must be designed and installed to ensure that the operation and operational capability of these systems to perform critical functions are not adversely affected when the airplane is exposed to high-intensity radiated fields external to the airplane.

2. For the purpose of these special conditions, the following definition applies: *Critical Functions:* Functions whose failure would contribute to or cause a failure that would prevent the continued safe flight and landing of the airplane.

Issued in Renton, Washington, on October 11, 2002.

Ali Bahrami,

Acting Manager, Transport Airplane Directorate, Aircraft Certification Service.

[FR Doc. 02–27171 Filed 10–24–02; 8:45 am]

BILLING CODE 4910–13–P

DEPARTMENT OF TRANSPORTATION

Federal Aviation Administration

14 CFR Part 25

[Docket No. NM235; Special Conditions No. 25–219–SC]

Special Conditions: Boeing 727–100 and –200 Series Airplanes; High-Intensity Radiated Fields (HIRF)

AGENCY: Federal Aviation Administration (FAA), DOT.

ACTION: Final special conditions; request for comments.

SUMMARY: These special conditions are issued for Boeing Model 727–100 and –200 series airplanes modified by Aircraft Systems & Manufacturing, Inc. These modified airplanes will have a novel or unusual design feature when compared to the state of technology envisioned in the airworthiness standards for transport category airplanes. The modification incorporates the installation of new dual Innovative Solutions & Support (IS&S) Mach Airspeed Indicators that perform critical functions. The applicable airworthiness regulations do not contain adequate or appropriate safety standards for the protection of these systems from the effects of high-intensity radiated fields (HIRF). These special conditions contain the additional safety standards that the Administrator considers necessary to establish a level of safety equivalent to that established by the existing airworthiness standards.

DATES: The effective date of these special conditions is October 11, 2002. Comments must be received on or before November 25, 2002.

ADDRESSES: Comments on these special conditions may be mailed in duplicate to: Federal Aviation Administration, Transport Airplane Directorate, Attention: Rules Docket (ANM–113), Docket No. NM235, 1601 Lind Avenue SW., Renton, Washington 98055–4056; or delivered in duplicate to the Transport Airplane Directorate at the above address. All comments must be marked: Docket No. NM235. Comments may be inspected in the Rules Docket weekdays, except Federal holidays, between 7:30 a.m. and 4 p.m.

FOR FURTHER INFORMATION CONTACT: Connie Beane, FAA, Standardization Branch, ANM–113, Transport Airplane Directorate, Aircraft Certification Service, 1601 Lind Avenue SW., Renton, Washington 98055–4056; telephone (425) 227–2796; facsimile (425) 227–1149.

SUPPLEMENTARY INFORMATION:

Comments Invited

The FAA has determined that notice and opportunity for prior public comment hereon are impracticable because these procedures would significantly delay certification, and thus delivery, of the affected airplane. In addition, the substance of these special conditions has been subject to the public comment process in several prior instances with no substantive comments received. The FAA therefore finds that good cause exists for making these special conditions effective upon issuance; however, the FAA invites interested persons to participate in this rulemaking by submitting written comments, data, or views. The most helpful comments reference a specific portion of the special conditions, explain the reason for any recommended change, and include supporting data. We ask that you send us two copies of written comments.

We will file in the docket all comments we receive, as well as a report summarizing each substantive public contact with FAA personnel concerning these special conditions. The docket is available for public inspection before and after the comment closing date. If you wish to review the docket in person, go to the address in the **ADDRESSES** section of this preamble between 7:30 a.m. and 4 p.m., Monday through Friday, except Federal holidays.

We will consider all comments we receive on or before the closing date for comments. We will consider comments filed late if it is possible to do so without incurring expense or delay. We may change these special conditions in light of the comments we receive.

If you want the FAA to acknowledge receipt of your comments on this proposal, include with your comments a pre-addressed, stamped postcard on which the docket number appears. We will stamp the date on the postcard and mail it back to you.

Background

On June 19, 2002, Aircraft Systems & Manufacturing, Inc., Georgetown, Texas, applied for a supplemental type certificate (STC) to modify Boeing Model 727–100 and –200 series airplanes. These airplanes are low-wing, pressurized transport category airplanes with three fuselage-mounted jet engines. They are capable of seating between 120 and 189 passengers, depending upon the model and configuration. The modification incorporates the installation of dual IS&S Mach Airspeed Indicators, replacing the existing Mach Airspeed Indicators. The Mach Airspeed Indicators have two modes, normal and

standby, which incorporate both a repeater function and a pneumatic function. These systems have a potential to be vulnerable to high-intensity radiated fields (HIRF) external to the airplane.

Type Certification Basis

Under the provisions of 14 CFR 21.101, Amendment 21–69, effective September 16, 1991, Aircraft Systems & Manufacturing, Inc. must show that the Boeing Model 727–100 and –200 series airplanes, as modified to include the new dual IS&S Mach Airspeed Indicators, continue to meet the applicable provisions of the regulations incorporated by reference in Type Certificate No. A3WE or the applicable regulations in effect on the date of application for the change. Subsequent changes have been made to § 21.101 as part of Amendment 21–77, but those changes do not become effective until June 10, 2003. The regulations incorporated by reference in the type certificate are commonly referred to as the ''original type certification basis.'' The specific regulations included in the certification basis for the Boeing Model 727–100 and –200 series airplanes include Civil Air Regulations (CAR) 4b, as amended by amendments 4b–1 through 4b–12.

If the Administrator finds that the applicable airworthiness regulations (*i.e.*, CAR 4b, as amended) do not contain adequate or appropriate safety standards for the Boeing Model 727–100 and –200 series airplanes because of a novel or unusual design feature, special conditions are prescribed under the provisions of § 21.16.

In addition to the applicable airworthiness regulations and special conditions, the Boeing 727–100 and ''200 series airplanes must comply with fuel vent and exhaust emissions requirements of 14 CFR part 34 and the noise certification requirements of 14 CFR part 36.

Special conditions, as defined in 14 CFR 11.19, are issued in accordance with § 11.38 and become part of the airplane's type certification basis in accordance with § 21.101(b)(2), Amendment 21–69, effective September 16, 1991.

Special conditions are initially applicable to the model for which they are issued. Should Aircraft Systems & Manufacturing, Inc. apply at a later date for a supplemental type certificate to modify any other model included on the same type certificate to incorporate the same novel or unusual design feature, these special conditions would also apply to the other model under the provisions of § 21.101(a)(1), Amendment 21–69, effective September 16, 1991.

Novel or Unusual Design Features

Boeing Model 727–100 and –200 airplanes modified by Aircraft Systems & Manufacturing, Inc. will incorporate new dual IS&S Mach Airspeed Indicators that will perform critical functions. These systems may be vulnerable to high-intensity radiated fields external to the airplane. The current airworthiness standards of part 25 do not contain adequate or appropriate safety standards that address the protection of this equipment from the adverse effects of HIRF. Accordingly, these systems are considered to be novel or unusual design features.

Discussion

There is no specific regulation that addresses protection requirements of electrical and electronic systems from HIRF. Increased power levels from ground-based radio transmitters and the growing use of sensitive avionics/electronics and electrical systems to command and control airplanes have made it necessary to provide adequate protection.

To ensure that a level of safety is achieved that is equivalent to that intended by the regulations incorporated by reference, special conditions are needed for the Boeing Model 727–100 and –200 series airplanes modified by Aircraft Systems & Manufacturing, Inc. These special conditions require that the new dual IS&S Mach Airspeed Indicators, which perform critical functions, be designed and installed to preclude component damage and interruption of function due to both the direct and indirect effects of HIRF.

High-Intensity Radiated Fields (HIRF)

With the trend toward increased power levels from ground-based transmitters and the advent of space and satellite communications, coupled with electronic command and control of the airplane, the immunity of critical digital avionics/electronics and electrical systems to HIRF must be established.

It is not possible to precisely define the HIRF to which the airplane will be exposed in service. There is also uncertainty concerning the effectiveness of airframe shielding for HIRF. Furthermore, coupling of electromagnetic energy to cockpit-installed equipment through the cockpit window apertures is undefined. Based on surveys and analysis of existing HIRF emitters, an adequate level of protection exists when compliance with the HIRF protection special condition is shown with either paragraph 1 or 2 below:

1. A minimum threat of 100 volts rms (root-mean-square) per meter electric field strength from 10 KHz to 18 GHz.

a. The threat must be applied to the system elements and their associated wiring harnesses without the benefit of airframe shielding.

b. Demonstration of this level of protection is established through system tests and analysis.

2. A threat external to the airframe of the field strengths indicated in the table below for the frequency ranges indicated. Both peak and average field strengths components from the table are to be demonstrated.

Frequency	Field strength (volts per meter)	
	Peak	Average
10 kHz–100 kHz	50	50
100 kHz–500 kHz	50	50
500 kHz–2 MHz	50	50
2 MHz–30 MHz	100	100
30 MHz–70 MHz	50	50
70 MHz–100 MHz	50	50
100 MHz–MHz 200	100	100
200 MHz–400 MHz	100	100
400 MHz–700 MHz	700	50
700 MHz–1 GHz	700	100
1 GHz–2 GHz	2000	200
2 GHz–4 GHz	3000	200
4 GHz–6 GHz	3000	200
6 GHz–8 GHz	1000	200
8 GHz–12 GHz	3000	300
12 GHz–18 GHz	2000	200
18 GHz–40 GHz	600	200

The field strengths are expressed in terms of peak of the root-mean-square (rms) over the complete modulation period.

The threat levels identified above are the result of an FAA review of existing studies on the subject of HIRF, in light of the ongoing work of the Electromagnetic Effects Harmonization Working Group of the Aviation Rulemaking Advisory Committee.

Applicability: As discussed above, these special conditions are applicable to the Boeing Model 727–100 and -200 airplanes modified by Aircraft Systems & Manufacturing, Inc. to install new dual IS&S Mach Airspeed Indicators. Should Aircraft Systems & Manufacturing, Inc. apply at a later date for a supplemental type certificate to modify any other model included on Type Certificate A3WE to incorporate the same novel or unusual design feature, these special conditions would apply to that model as well under the provisions of § 21.101(a)(1), Amendment 21–69, effective September 16, 1991.

Conclusion

This action affects only certain design features on the Boeing Model 727–100 and –200 series airplanes modified by Aircraft Systems & Manufacturing, Inc. to include the new dual IS&S Mach Airspeed Indicators. It is not a rule of general applicability and affects only the applicant who applied to the FAA for approval of these features on the airplanes.

The substance of the special conditions for these airplanes has been subjected to the notice and comment procedure in several prior instances and has been derived without substantive change from those previously issued. Because a delay would significantly affect the certification of the airplane, which is imminent, the FAA has determined that prior public notice and comment are unnecessary and impracticable, and good cause exists for adopting these special conditions upon publication. The FAA is requesting comments to allow interested persons to submit views that may not have been submitted in response to the prior opportunities for comment described above.

List of Subjects in 14 CFR Part 25

Aircraft, Aviation safety, Reporting and recordkeeping requirements.

The authority citation for these special conditions is as follows:

Authority: 49 U.S.C. 106(g), 40113, 44701, 44702, 44704.

The Special Conditions

Accordingly, pursuant to the authority delegated to me by the Administrator, the following special conditions are issued as part of the supplemental type certification basis for the Boeing Model 727 –100 and –200 series airplanes as modified by Aircraft Systems & Manufacturing, Inc.

1. *Protection from Unwanted Effects of High-Intensity Radiated Fields (HIRF).* Each electrical and electronic system that performs critical functions must be designed and installed to ensure that the operation and operational capabilities of these systems to perform critical functions are not adversely affected when the airplane is exposed to high-intensity radiated fields external to the airplane.

2. For the purpose of these special conditions, the following definition applies: *Critical Functions:* Functions whose failure would contribute to or cause a failure condition that would prevent the continued safe flight and landing of the airplane.

Issued in Renton, Washington, on October 11, 2002.

Ali Bahrami,

Acting Manager, Transport Airplane Directorate, Aircraft Certification Service.

[FR Doc. 02–27170 Filed 10–24–02; 8:45 am]

BILLING CODE 4910–13–P

DEPARTMENT OF TRANSPORTATION

Federal Aviation Administration

14 CFR Part 39

[Docket No. 99–CE–85–AD; Amendment 39–12917; AD 2002–21–11]

RIN 2120–AA64

Airworthiness Directives; EXTRA Flugzeugbau GmbH Model EA–300S Airplanes

AGENCY: Federal Aviation Administration, DOT.

ACTION: Final rule.

SUMMARY: This amendment adopts a new airworthiness directive (AD) that applies to certain EXTRA Flugzeugbau GmbH (EXTRA) Model EA–300S airplanes. This AD requires you (for all affected airplanes) to inspect the upper longeron at the horizontal stabilizer attachment for cracks using a fluorescent dye check penetrant method, repair any cracks found, and modify the horizontal stabilizer. This AD also requires a limit on operation to the Normal category until accomplishment of the initial inspection and modification on airplanes with less than 200 hours time-in-service (TIS). This AD is the result of reports of fatigue cracks at the horizontal stabilizer attachment on the affected airplanes. The actions specified by this AD are intended to detect and correct cracks in the horizontal stabilizer attachment, which could result in structural failure of the aft fuselage with consequent loss of control of the airplane.

DATES: This AD becomes effective on December 17, 2002.

The Director of the Federal Register approved the incorporation by reference of certain publications listed in the regulations as of December 17, 2002.

ADDRESSES: You may get the service information referenced in this AD from EXTRA Flugzeugbau GmbH, Flugplatz Dinslaken, D–46569 Hunxe, Federal Republic of Germany; telephone: (0 28 58) 91 37–00; facsimile: (0 28 58) 91 37–30. You may view this information at the Federal Aviation Administration (FAA), Central Region, Office of the Regional Counsel, Attention: Rules Docket No. 99–CE–85–AD, 901 Locust, Room 506, Kansas City, Missouri 64106; or at the Office of the Federal Register, 800 North Capitol Street, NW, suite 700, Washington, DC.

FOR FURTHER INFORMATION CONTACT: Karl Schletzbaum, Aerospace Engineer, FAA, Small Airplane Directorate, 901 Locust, Room 301, Kansas City, Missouri 64106; telephone: (816) 329–4146; facsimile: (816) 329–4090.

SUPPLEMENTARY INFORMATION:

Discussion

What Events Have Caused This AD?

On October 17, 1997, FAA issued a Special Airworthiness Information Bulletin (SAIB) to recommend an inspection of the horizontal stabilizer attachment on EXTRA Models EA–300, EA–300L, and EA–300S airplanes. The SAIB recommended compliance with EXTRA Service Bulletin SB–300–2–95.

The Luftfahrt-Bundesamt (LBA), which is the airworthiness authority for Germany, did not consider the actions of the service bulletin mandatory and consequently did not issue an AD against airplanes on the German register. The FAA also did not issue an AD at this time because the service history did not warrant such action.

Since that time, FAA has received information that indicates fatigue cracks at the horizontal stabilizer attachment are occurring on the above-referenced airplanes. These airplanes are utilized in aerobatic maneuvers and the stress in the area of the horizontal stabilizer can lead to cracks in this area, as well as in the upper longerons and diagonal braces.

What Is the Potential Impact If FAA Took No Action?

This condition, if not corrected, could lead to structural failure of the aft fuselage with consequent loss of control of the airplane.

Has FAA Taken Any Action to This Point?

We issued a proposal to amend part 39 of the Federal Aviation Regulations (14 CFR part 39) to include an AD that would apply to certain EXTRA Models EA–300, EA–300L, and EA–300S airplanes. This proposal was published in the **Federal Register** as a notice of proposed rulemaking (NPRM) on September 26, 2001 (66 FR 49148). The NPRM proposed to require:

—For all affected airplanes: an inspection of the upper longeron at the horizontal stabilizer attachment for cracks using a fluorescent dye check penetrant method, repair of any cracks found, and modification of the horizontal stabilizer; and

—On airplanes with less than 200 hours time-in-service (TIS) as of the effective date of the proposed AD: a limit on operation to the Normal category until accomplishment of the initial inspection and modification.

Was the Public Invited To Comment?

The FAA encouraged interested persons to participate in the making of this amendment. One person responded. The following presents the comments received on the proposal from this person and FAA's response to each comment:

Comment Issue No. 1: There Is No Justification for an AD

What Is the Commenter's Concern?

The commenter states that FAA has no justification for issuing the proposed AD. These concerns include:

1. The service bulletin adequately addresses the problem.
2. The manufacturer was unaware of FAA's intent to propose an AD.
3. The LBA never even considered issuing an AD.
4. The accident Model EA–300S airplane was used for competition and was operated outside the design envelope.

We infer that the commenter wants the NPRM withdrawn.

What Is FAA's Response to the Concern?

We do not concur that the NPRM should be withdrawn. The following addresses each of the issues specified above:

1. The only way FAA can enforce the actions of a service bulletin on airplanes registered for operation in the United States is by issuing an AD.
2. We notified the LBA, which is the airworthiness authority for Germany (the State of Design of the affected airplanes), of our intent to issue an AD. This is in accordance with the bilateral agreement between the United States and Germany.
3. According to our correspondence, the LBA believed that this condition was only isolated to those aircraft in the United States, and thus LBA was not planning on initiating AD action.
4. We agree that the correct use of an AD is not to address a structural failure when the airplanes are flown outside of their certificated limits. However, we are not aware of any crew statements or other information that the failures of the aft fuselage structure were due to airplanes flying outside the design envelope.

We are not changing the final rule AD action as a result of these comments.

Comment Issue No. 2: Remove the Models EA–300 and EA–300L From the Applicability of the AD

What Is the Commenter's Concern?

The commenter states that we have not shown how the condition on the Model EA–300S airplanes is likely to exist or develop on the Models EA–300 and EA–300L airplanes. The commenter points out that no service history exists on fatigue failure of the aft fuselage structure for the Models EA–300 and EA–300L airplanes. The commenter also states that EXTRA has said that only the Model EA–300S airplanes are conducive to this condition.

What Is FAA's Response to the Concern?

We concur that no service history exists on the fatigue failures of the aft fuselage structure for the Models EA–300 and EA–300L airplanes. While EXTRA may have made statements that only the Model EA–300S airplanes were affected by this condition, EXTRA has included the Models EA–300 and EA–300L airplanes in every service bulletin revision level related to this subject.

We have re-evaluated all information related to this subject and have decided to only apply the AD to the Model EA–300S airplanes. We will continue to monitor this subject on the Models EA–300 and EA–300L airplanes and may implement future rulemaking action if necessary.

We are changing the final rule AD action so that only the Model EA–300S airplanes are contained in the Applicability.

Comment Issue No. 3: Cost Estimate is Too Low

What Is the Commenter's Concern?

The commenter states that we underestimated the cost impact that the proposed AD would have upon the public. The commenter estimates that the proposed AD costs three times more than what we estimated, but the commenter does not provide any specific labor and parts costs.

What Is FAA's Response to the Concern?

Due to the unavailability of cost information on this subject, we estimated the labor and parts cost to accomplish the inspection and any repairs. As in any aircraft modification or repair, there is chance of variation in cost estimates from airplane to airplane.

We have determined that our cost estimate is as accurate as possible at this time. No substantiating information was presented to show that it is in error. Therefore, we are not changing the final rule as a result of this comment.

FAA's Determination

What Is FAA's Final Determination on this Issue?

After careful review of all available information related to the subject presented above, we have determined that air safety and the public interest require the adoption of the rule as proposed except for removing the Models EA–300 and EA–300L airplanes from the Applicability and minor editorial corrections. We have determined that this removal and the minor corrections:

—Provide the intent that was proposed in the NPRM for correcting the unsafe condition; and

—Do not add any additional burden upon the public than was already proposed in the NPRM.

Cost Impact

How Many Airplanes Does This AD Impact?

We estimate that this AD affects 21 airplanes in the U.S. registry.

What Is the Cost Impact of This AD on Owners/Operators of the Affected Airplanes?

We estimate the following costs to accomplish the inspection:

Labor cost	Parts cost	Total cost per airplane	Total cost on U.S. operators
24 workhours × $60 per hour = $1,440	Not applicable	$1,440	$1,440 × 21 = $30,240.

We estimate the following costs to accomplish any necessary repair or replacement that will be required based on the results of the inspection. We have no way of determining the number of airplanes that may need such repair or replacement:

Labor cost	Parts cost	Total cost per airplane
40 workhours × $60 per hour = $2,400	Parts provided at no cost	$2,400 per airplane.

Regulatory Impact

Does This AD Impact Various Entities?

The regulations adopted herein will not have a substantial direct effect on the States, on the relationship between the national government and the States, or on the distribution of power and responsibilities among the various levels of government. Therefore, it is determined that this final rule does not have federalism implications under Executive Order 13132.

Does This AD Involve a Significant Rule or Regulatory Action?

For the reasons discussed above, I certify that this action (1) is not a ''significant regulatory action'' under Executive Order 12866; (2) is not a ''significant rule'' under DOT Regulatory Policies and Procedures (44 FR 11034, February 26, 1979); and (3) will not have a significant economic impact, positive or negative, on a substantial number of small entities under the criteria of the Regulatory Flexibility Act. A copy of the final evaluation prepared for this action is contained in the Rules Docket. A copy of it may be obtained by contacting the Rules Docket at the location provided under the caption **ADDRESSES.**

List of Subjects in 14 CFR Part 39

Air transportation, Aircraft, Aviation safety, Incorporation by reference, Safety.

Adoption of the Amendment

Accordingly, under the authority delegated to me by the Administrator, the Federal Aviation Administration amends part 39 of the Federal Aviation Regulations (14 CFR part 39) as follows:

PART 39—AIRWORTHINESS DIRECTIVES

1. The authority citation for part 39 continues to read as follows:

Authority: 49 U.S.C. 106(g), 40113, 44701.

§ 39.13 [Amended]

2. FAA amends § 39.13 by adding a new AD to read as follows:

2002–21–11 Extra Flugzeugbau GmbH: Amendment 39–12917; Docket No. 99–CE–85–AD.

(a) *What airplanes are affected by this AD?* This AD affects Model EA–300S airplanes, serial numbers 1 through 29, that are certificated in any category.

(b) *Who must comply with this AD?* Anyone who wishes to operate any of the above airplanes must comply with this AD.

(c) *What problem does this AD address?* The actions specified by this AD are intended to detect and correct cracks in the horizontal stabilizer attachment, which could result in structural failure of the aft fuselage with consequent loss of control of the airplane.

(d) *What actions must I accomplish to address this problem?* To address this problem, you must accomplish the following:

Actions	Compliance	Procedures
(1) For all affected airplanes, inspect, using a fluorescent dye penetrant method, the upper longeron at the horizontal stabilizer attachment for cracks in the areas depicted in Figure 1 of this AD.	Upon accumulating 250 hours time-in-service (TIS) or within the next 50 hours TIS after December 17, 2002 (the effective date of this AD), whichever occurs later.	In accordance with Part I of Extra Service Bulletin No. 300–2–95 (pages 2–6 at Issue: C, dated July 15, 1998; and pages 1 and 7 through 11 at Issue: D, dated January 30, 2001). No further action is required by this paragraph if the modification is already accomplished in accordance with Part II of Extra Service Bulletin No. 300–2–95 (all pages at Issue: C, dated July 15, stabilizer 1998).
(2) For all affected airplanes, if no crack(s) is (are) found during the inspection required by this AD, modify the upper longeron at the horizontal stabilizer attachment.	Prior to further flight after the inspection required by paragraph (d)(1) of this AD.	In accordance with Part II of Extra Service Bulletin No. 300–2–95 (pages 2–6 at Issue: C, dated July 15, 1998; and pages 1 and 7 through 11 at Issue: D, dated January 30, 2001). No further action is required by this paragraph if already accomplished in accordance with Part II of Extra Service Bulletin No. 300–2–95 (all pages at Issue: C, dated July 15, 1998).
(3) For all affected airplanes, if any crack is found during the inspection required by this AD and the cracks(s) is (are) in Area A or Area B as depicted in Figure 1 of this AD, accomplish the following: (i) Repair and modify the upper longeron at the horizontal stabilizer attachment; and (ii) Weld the cracks tight during repair.	Prior to further flight after the inspection where any crack is found in Area A or Area B as depicted in Figure 1 of this AD.	In accordance with Part II of Extra Service Bulletin No. 300–2–95, Issue: D, dated January 30, 2001. No further action is required by this paragraph if already accomplished in accordance with Part II of Extra Service Bulletin No. 300–2–95 (all pages at Issue: C, dated July 15, 1998).
(4) For all affected airplanes, if any crack is found during the inspection and the crack(s) is (are) in Area C as depicted in Figure 1 of this AD, accomplish the following: (i) Obtain a repair scheme from the manufacturer; (ii) Incorporate this repair scheme; and (iii) Accomplish any follow-up actions as directed by the FAA.	Prior to further flight after the inspection where any crack is found.	In accordance with a repair scheme obtained from EXTRA Flugzeugbau GmbH, Flugplatz Dinslaken, D–46569 Hünxe, Federal Republic of Germany; telephone: (0 28 58) 91 37–00; facsimile: (0 28 58) 91 37–30. Obtain this repair scheme through the FAA at the address specified in paragraph (g) of this AD.

Actions	Compliance	Procedures
(5) For airplanes with less than 200 hours TIS as of the effective date of this AD, limit operation to the Normal category by accomplishing the following: (i) Fabricate two placards using letters of at least 1/10-inch in height consisting of the following words: ''OPERATIONS LIMITED TO NORMAL CATEGORY''; (ii) Install these placards on the airplane instrument panels (one on the front panel and one on the rear panel) next to the airspeed indicators within the pilot's clear view; and (iii) Insert a copy of this AD into the Limitations Section of the Airplane Flight Manual (AFM).	Within the next 50 hours TIS after December 17, 2002 (the effective date of this AD), until the inspection and the modification required by this AD are accomplished	Not Applicable.
(6) The owner/operator holding at least a private pilot certificate as authorized by section 43.7 of the Federal Aviation Regulations (14 CFR 43.7) may fabricate and install the placard as required by paragraphs (d)(5)(i) and (d)(5)(ii) of this AD and insert this AD into the Limitations Section of the AFM as required by paragraph (d)(5)(iii) of this AD.	Within the next 50 hours TIS after December 17, 2002 (the effective date of this AD), until the first inspection and the modification required by this AD are accomplished.	Make an entry into the aircraft records showing compliance with this AD in accordance with section 43.9 of the Federal Aviation Regulations (14 CFR 43.9).
(7) For all affected Model EA–300S airplanes, modify the fuselage frame underneath the stabilizer attachment.	Within the next 200 hours TIS after December 17, 2002 (the effective date of this AD).	In accordance with Part III of Extra Service Bulletin No. 300–2–95 (pages 2–6 at Issue: C, dated July 15, 1998; and pages 1 and 7 through 11 at Issue: D, dated January 30, 2001).
(8) For all affected airplanes with less than 200 hours TIS as of the effective date of this AD, the inspection, modification, and repair, as necessary (as specified in paragraphs (d)(1) through (d)(4) of this AD) may be accomplished instead of the operational limitations of paragraph (d)(5) of this AD.	At any time, but it must be accomplished upon accumulating 250 hours TIS or within the next 50 hours TIS after December 17, 2002 (the effective date of this AD), whichever occurs later.	Inspect in accordance with Figure 1 of this AD and Part I of Extra Service Bulletin No. 300–2–95 (pages 2–6 at Issue: C, dated July 15, 1998; and pages 1 and 7 through 11 at Issue: D, dated January 30, 2001). Modify in accordance with Part II of the service bulletin. Repair in accordance with the service bulletin or a repair scheme obtained manufacturer, as applicable.

(e) *Where can I find Figure 1 of this AD?* Figure 1 of this AD, as referenced in paragraphs (d)(3), (d)(4), and (d)(8) of this AD, follows:

BILLING CODE 4910–13–P

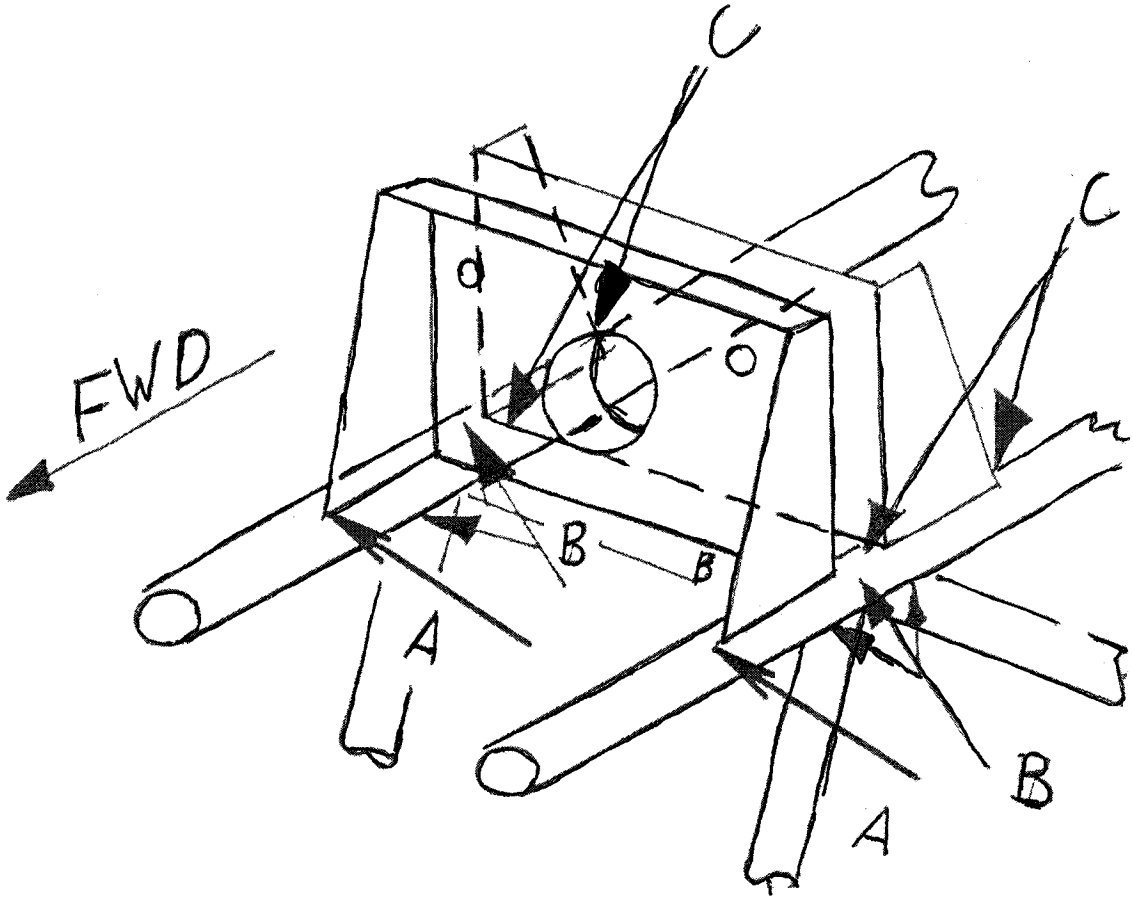

Figure 1

(f) *Can I comply with this AD in any other way?* You may use an alternative method of compliance or adjust the compliance time if:

(1) Your alternative method of compliance provides an equivalent level of safety; and

(2) The Manager, Small Airplane Directorate, approves your alternative. Submit your request through an FAA Principal Maintenance Inspector, who may add comments and then send it to the Manager, Small Airplane Directorate.

Note : This AD applies to each airplane identified in paragraph (a) of this AD, regardless of whether it has been modified, altered, or repaired in the area subject to the requirements of this AD. For airplanes that have been modified, altered, or repaired so that the performance of the requirements of this AD is affected, the owner/operator must request approval for an alternative method of compliance in accordance with paragraph (f) of this AD. The request should include an assessment of the effect of the modification, alteration, or repair on the unsafe condition addressed by this AD; and, if you have not eliminated the unsafe condition, specific actions you propose to address it.

(g) *Where can I get information about any already-approved alternative methods of compliance?* Contact Karl Schletzbaum, Aerospace Engineer, FAA, Small Airplane Directorate, 901 Locust, Room 301, Kansas City, Missouri 64106; telephone: (816) 329–4146; facsimile: (816) 329–4090.

(h) *What if I need to fly the airplane to another location to comply with this AD?* The FAA can issue a special flight permit under sections 21.197 and 21.199 of the Federal Aviation Regulations (14 CFR 21.197 and 21.199) to operate your airplane to a location where you can accomplish the requirements of this AD.

(i) *Are any service bulletins incorporated into this AD by reference?* Actions required by this AD must be done in accordance with Extra Flugzeugbau GmbH Service Bulletin No. SB–300–2–95 (pages 2–6 at Issue: C, dated July 15, 1998; and pages 1 and 7 through 11 at Issue: D, dated January 30, 2001). The Director of the Federal Register approved this incorporation by reference under 5 U.S.C. 552(a) and 1 CFR part 51. You can get copies from EXTRA Flugzeugbau GmbH, Flugplatz Dinslaken, D–46569 Hünxe, Federal Republic of Germany. You can look at copies at the FAA, Central Region, Office of the Regional Counsel, 901 Locust, Room 506, Kansas City, Missouri, or at the Office of the Federal Register, 800 North Capitol Street, NW, suite 700, Washington, DC.

(j) *When does this amendment become effective?* This amendment becomes effective on December 17, 2002.

Issued in Kansas City, Missouri, on October 11, 2002.

Dorenda D. Baker,

Acting Manager, Small Airplane Directorate, Aircraft Certification Service.

[FR Doc. 02–26660 Filed 10–24–02; 8:45 am]

BILLING CODE 4910–13–P

DEPARTMENT OF TRANSPORTATION

Federal Aviation Administration

14 CFR Part 39

[Docket No. 2000–NE–47–AD; Amendment 39–12916; AD 2002–21–10]

RIN 2120–AA64

Airworthiness Directives; Pratt and Whitney PW4000 Series Turbofan Engines

AGENCY: Federal Aviation Administration, DOT.

ACTION: Final rule; request for comments.

SUMMARY: This amendment supersedes an existing airworthiness directive (AD) that is applicable to Pratt and Whitney (PW) model 4000 series turbofan engines. That action required PW4000 engines with potentially reduced stability margin to be limited to no more than one engine on each airplane, and required removing engines that exceed high pressure compressor (HPC) cycles-since-overhaul (CSO) or cycles-since-new (CSN) from service based on the engine's configuration and category. That action also required establishing a minimum build standard for engines that are returned to service, and performing cool-engine fuel spike testing (Testing-21) on engines to be returned to service after having exceeded HPC cyclic limits or after shop maintenance.

This amendment establishes requirements similar to those in the existing AD being superseded, and introduces a rules-based criterion to determine the engine category classification for engines installed on Airbus A300 airplanes. This amendment also adds requirements to manage the engine configurations installed on Boeing 747 airplanes, and requires that repetitive Testing-21 be performed on certain configuration engines. This amendment also establishes criteria that requires Testing-21 on certain engines with Phase 0 or Phase 1, FB2T, or FB2B fan blade configurations. In addition, this amendment re-establishes high pressure compressor (HPC)-to-high pressure-turbine (HPT) cycles-since-overhaul (CSO) cyclic mismatch criteria, and adds criteria to address engine installation changes, engine transfers, and thrust rating changes. Also, this amendment establishes criteria to allow engine stagger without performing Testing-21 for engines which are over their respective limits. This amendment also introduces new requirements on the Phase 3, first run subpopulation engines which were identified after the issuance of NPRM Docket No. 2000–NE–47–AD.

The Phase 3, first run subpopulation engines have a significant increase in surge rate and Testing-21 failure rate than the rest of the PW4000 fleet. In order to manage the subpopulation engines to preclude a dual-engine surge, immediate action is required.

This immediately adopted rule includes the requirements proposed in the NPRM as well as the required actions for the Phase 3, first run subpopulation engines.

This amendment is prompted by investigation and evaluation of PW4000 series turbofan engines surge data, and continuing reports of surges in the PW4000 fleet. The actions specified in this AD are intended to prevent engine takeoff power losses due to HPC surge.

DATES: Effective November 12, 2002. The incorporation by reference of certain publications listed in the rule is approved by the Director of the Federal Register as of November 12, 2002.

The incorporation by reference of certain other publications, as listed in the regulations, was approved previously by the Director of the Federal Register as of January 17, 2002 (67 FR 1, January 2, 2002).

Comments for inclusion in the Rules Docket must be received on or before December 24, 2002.

ADDRESSES: Submit comments in triplicate to the Federal Aviation Administration (FAA), New England Region, Office of the Regional Counsel, Attention: Rules Docket No. 2000–NE–47–AD, 12 New England Executive Park, Burlington, MA 01803–5299. Comments may be inspected at this location, by appointment, between 8 a.m. and 4:30 p.m., Monday through Friday, except Federal holidays. Comments may also be sent via the Internet using the following address: *9-ane-adcomment@faa.gov*. Comments sent via the Internet must contain the docket number in the subject line.

The Pratt & Whitney service information referenced in this AD may be obtained from Pratt & Whitney, 400 Main St., East Hartford, CT 06108, telephone (860) 565–6600; fax (860) 565–4503. All service information may be examined, by appointment, at the FAA, New England Region, Office of the Regional Counsel, 12 New England Executive Park, Burlington, MA; or at the Office of the Federal Register, 800 North Capitol Street, NW., Suite 700, Washington, DC.

FOR FURTHER INFORMATION CONTACT: Diane Cook, Aerospace Engineer, Engine Certification Office, FAA, Engine and Propeller Directorate, 12 New England Executive Park, Burlington, MA 01803–5299; telephone (781) 238–7133; fax (781) 238–7199.

SUPPLEMENTARY INFORMATION: A proposal to amend part 39 of the Federal Aviation Regulations (14 CFR part 39) by superseding AD 2001–25–11, Amendment 39–12564 (67 FR 1, January 2, 2002), which is applicable to Pratt and Whitney (PW) model 4000 series turbofan engines, was published in the **Federal Register** on July 23, 2002. That action proposed to establish requirements similar to those in AD 2001–25–11, to introduce rules-based criterion to determine the engine category classification for engines installed on Airbus A300 airplanes, and to add requirements to manage the engine configurations installed on Boeing 747 airplanes. That action also proposed to require repetitive Testing-21 be performed on certain configuration engines. That action also proposed to establish criteria which would require Testing-21 on certain engines with Phase 0 or Phase 1, FB2T or FB2B fan blade configurations. In addition, that action proposed to re-establish HPC-to-HPT cycles-since-overhaul cyclic mismatch criteria, and add criteria to address engine installation changes, engine transfers, and thrust rating changes. Also, that action proposed to establish criteria to allow engine stagger without performing Testing-21 for engines over their respective limits.

This final rule; request for comments supersedes AD 2001–25–11 by requiring the same actions as the proposal, and in addition, introduces new requirements for the Phase 3, first run subpopulation engines that were identified after the issuance of the proposal.

Manufacturer's Service Information

The FAA has reviewed and approved the technical contents of the following Pratt & Whitney service information:

- Service Bulletin PW4ENG72–714, Revision 1, dated November 8, 2001.
- Service Bulletin PW4ENG72–749, dated June 17, 2002.
- Internal Engineering Notice IEN 96KC973D, dated October 12, 2001.
- Temporary Revision (TR) TR 71–0018, dated November 14, 2001.
- TR 71–0026, dated November 14, 2001.

• TR 71 71–0035, dated November 14, 2001.

• Cleaning, Inspection, and Repair (CIR) procedure CIR 51A357, Section 72–35–68, Inspection/Check-04, Indexes 8–11, dated September 15, 2001.

• CIR 51A357, Section 72–35–68, Repair 16, dated June 15, 1996.

• PW4000 PW engine manual (EM) 50A443, 71–00–00, TESTING–21, dated March 15, 2002.

• PW4000 PW EM 50A822, 71–00–00, TESTING–21, dated March 15, 2002.

• PW 4000 PW EM 50A605, 71–00–00, TESTING–21, dated March 15, 2002.

Additional Service Information

The FAA has reviewed and approved the technical contents of Chromalloy Florida Repair Procedures, 00 CFL–039–0, dated December 27, 2000 and 02 CFL–024–0, dated September 15, 2002.

FAA's Determination of an Unsafe Condition and Required Actions

Since an unsafe condition has been identified that is likely to exist or develop on other Pratt & Whitney PW4000 series turbofan engines of this same type design, the AD is issued to prevent engine takeoff power losses due to HPC surges, and supersedes AD 2001–25–11 to require:

• Establishing requirements similar to those in the existing AD, and use of a rules-based criterion to determine the engine category classification for engines installed on Airbus A300 airplanes.

• Adding requirements to manage the engine configurations installed on Boeing 747 airplanes. This engine and airplane combination would allow, for certain engine configurations, one of the four installed engines to remain on-wing until the HPC has accumulated up to 2,600 CSN or CSO before Testing-21 or until an HPC overhaul is required.

• Configuration F engines to repeat Testing-21 every 800 CST.

• Establishing criteria which would require Testing-21 on engines with Phase 0 or Phase 1, FB2T or FB2B fan blade configurations complying with the requirements of AD 2001–09–05, (66 FR 22908, May 7, 2001); AD 2001–09–10, (66 FR 21853, May 2, 2001), or AD 2001–01–10, (66 FR 6449, January 22, 2001).

• Re-establishing HPC-to-HPT CSO cyclic mismatch criteria.

• Establishing criteria to address engine installation changes, engine transfers, and thrust rating changes.

• Establishing criteria to allow an engine to be removed from service and reinstalled on an airplane, without requiring Testing-21, if this engine is the unmanaged engine for that airplane.

• Adding Configuration G engines, which represents the Phase 3, first run subpopulation engines and establishes requirements that reduces stagger limits.

• Adding Configuration H engines, which represents the Phase 3, first run subpopulation engines to repeat Testing-21 every 600 CST.

The actions are required to be done in accordance with the service information described previously, and have been coordinated with the Transport Airplane Directorate.

Immediate Adoption of This AD

Since a situation exists that requires the immediate adoption of this regulation, it is found that notice and opportunity for prior public comment hereon are impracticable, and that good cause exists for making this amendment effective in less than 30 days.

Comments Invited

Although this action is in the form of a final rule that involves requirements affecting flight safety and, thus, was not preceded by notice and an opportunity for public comment, comments are invited on this rule. Interested persons are invited to comment on this rule by submitting such written data, views, or arguments as they may desire. Communications should identify the Rules Docket number and be submitted in triplicate to the address specified under the caption **ADDRESSES**. All communications received on or before the closing date for comments will be considered, and this rule may be amended in light of the comments received. Factual information that supports the commenter's ideas and suggestions is extremely helpful in evaluating the effectiveness of the AD action and determining whether additional rulemaking action would be needed.

Comments are specifically invited on the overall regulatory, economic, environmental, and energy aspects of the rule that might suggest a need to modify the rule. All comments submitted will be available, both before and after the closing date for comments, in the Rules Docket for examination by interested persons. A report that summarizes each FAA-public contact concerned with the substance of this AD will be filed in the Rules Docket.

Commenters wishing the FAA to acknowledge receipt of their comments submitted in response to this action must submit a self-addressed, stamped postcard on which the following statement is made: ''Comments to Docket Number 2000–NE–47–AD.'' The postcard will be date stamped and returned to the commenter.

Comments

The FAA received several comments to NPRM, Docket No. 2000–NE–47. Even though this amendment is a final rule; request for comments, the FAA has chosen to address all comments received. Interested persons have been afforded an opportunity to participate in the making of this amendment. Due consideration has been given to the comments received, from the nine commenters.

Request Reason for Engine Category 1, 2, or 3 Limit Threshold Values

One commenter states that there is no reason why 200,000 cycles and 1.45 exhaust pressure ratio (EPR) should be the threshold values used in the AD to determine A300 4158 engine category 1, 2, or 3 limits, and asks for a technical reason for these values. The FAA disagrees. The FAA asked the original equipment manufacturer (OEM) to establish a rules-based criterion in which to determine the engine category classification for engines installed on Airbus A300 airplanes. The OEM chose a statistical approach and derived the values of 200,000 cycles and 1.45 EPR to represent the boundary conditions in determining the categories. The FAA has reviewed and concurs with this approach. This commenter also states that parameters in addition to EPR could better define the categorization. This commenter suggests using parameters such as rear hook wear and heat shield wear. The FAA disagrees. Although the FAA would support using additional parameters, there is not enough data to do so. Currently, data supports EPR as a parameter to correlate takeoff EPR values to a possible group 3 surge event. While the FAA agrees that rear hook wear may contribute to surge events, there is not enough data to develop a correlation of rear hook wear and heat shield wear to a surge event. The OEM indicates and the FAA agrees, that the heat shield wear is a third-order effect. This commenter also states that the definition of surge is unclear and that noise alone is insufficient to justify a Group 3 surge event. The FAA agrees. It was never the intent to imply that noise alone would classify an event as a Group 3 surge. The FAA also agrees with this first commenter that noise is a good reason to check the DFDR data and follow the trouble shooting process. The FAA has reviewed the definition of surge and has added words to the Group 3 surge definition for clarification.

Intent To Approve ''On-Wing'' Version of Testing-21

One commenter questions if it is the FAA's intent to approve the ''on-wing'' version of Testing-21 and include it into proposed paragraph (h)(1) as an equivalent to the ''test cell'' version. The FAA is reviewing the data for ''on wing'' version of Testing-21 but has yet to approve it. Therefore, ''on wing'' version of Testing-21 is not included in this paragraph of the AD. The FAA agrees with the commenter that, if approved, the FAA would have added this as an option into the paragraph, thereby eliminating the need for alternative methods of compliance (AMOC's). Unfortunately adequate data does not yet exist to approve the ''on wing'' version of Testing-21. If, at a later date, the FAA makes a finding of equivalence, the operator or the OEM can request an alternate method of compliance to use the ''on-wing'' version of Testing-21 in place of the ''test cell'' Testing-21.

Unnecessary and Confusing Text

This commenter also states that the following text of AD paragraph, under the heading Engines That Surge, ''* * * or before further flight if airplane-level troubleshooting procedures require immediate engine removal'' is unnecessary and may create confusion. The FAA disagrees. It is implied that the airplane level troubleshooting is surge related troubleshooting, because the paragraph states ''airplane-level surge''. However, to prevent possible confusion, wording in the paragraph has been changed to ''airplane level surge troubleshooting.'' This commenter also requests that any regulatory action on the Phase 3, fist run subpopulation engines be incorporated within this AD. The FAA agrees. This AD adds Configurations G and H engines, which represent these Phase 3, first run subpopulation engines requiring reduced limits. This subpopulation was identified after the issuance of the NPRM. Since an unsafe condition has been identified, immediate actions are required on these Phase 3, first run subpopulation engines.

Date of AD Should Coincide With Availability of the Ring Style HPC Case

Another commenter suggests that the effective date of this AD should coincide with the availability of the ring style HPC case, since this new HPC case is the terminating action. The FAA disagrees. Although we agree that the terminating action to this AD requires a hardware change to a ring style HPC case, the current rate of risk accumulation indicates corrective action must be initiated before hardware availability. The ring style HPC case will complete its certification within the first quarter of 2003, with Service Bulletins issuance expected shortly thereafter. However, AD action is required now to minimize the risk. This AD implements action necessary to ensure the risk remains at acceptable levels. This commenter also requests clarification of the requirements on engines which have passed Testing-21. The FAA confirms that once an engine has passed Testing-21, it becomes a Configuration F or H engine and will remain a Configuration F or H engine until the HPC is overhauled, or is replaced with a new or overhauled HPC. Configuration F and H engines are required to repeat Testing-21 within 800 cycles and 600 cycles respectively, since last test or be removed for HPC overhaul, unless it will be used as a single unmanaged engine as permitted by this AD. This commenter also requests that the FAA consider increasing the hard-time limit for HPC overhaul to 2,900 cycles so that any engine which is removed for stagger at HPC 2,100 cycles since overhaul (CSO) in accordance with the AD, can be used up to 2,900 cycles after passing Testing-21. The FAA partially agrees. The 2,100 cycles is not a hard-time limit, but a stagger limit for PW 4056 Configuration B or C engines installed on Boeing 747 airplanes in accordance with Table 3 of the NPRM. Unless designated as the unmanaged engine, these engines on the Boeing 747 must be removed from service before accumulating 2,100 CSN or CSO and perform Testing-21 or complete an HPC overhaul. If Testing-21 is successful, the engine is returned to service as a Configuration F engine. As a Configuration F engine, Testing-21 is required within 800 cycles since last test. In the commenter's example, 800 cycles since last test would be 2,900 CSO. As additional clarification, one of the four installed engines may remain on-wing until the HPC has accumulated up to 2,600 CSN or CSO before Testing-21 or until an HPC overhaul is required.

Question on Unmanaged Engine Concept

Another commenter questions why the new unmanaged engine concept of the Boeing 747/PW4056 fleet is limited to 2,600 HPC cycles since new or since overhaul. Since the Phase 3, first run engine configuration's stagger limit is already at 2,600 cycles, this commenter asks the FAA to consider similar manageable time allowance for these engines over its stagger limit. The FAA disagrees. In order to safely manage the fleet risk, PW and Boeing needed to adjust the B747/PW4056 fleet risk. It is a coincidence that the Phase 3, first run engine's stagger limit is also 2,600 cycles. To safely manage the overall program risk, the FAA must maintain the stagger limits and add cycle limits on the unmanaged engine configuration installed on the Boeing 747 airplane. In addition, since the NPRM was issued, a subpopulation of the Phase 3, first run engines has been identified which requires a further limit reduction.

This commenter also states that operators who have been initially categorized as an A300 PW4158 category 2 operator should not have to reassess their category. The commenter states that since the low surge rate of category 2 operators has been proven through their surge experience for a dedicated period of time with respective fleet takeoff EPR application, it is felt that reevaluation is unnecessary. The commenter requests the FAA allow initial category 2 operators to retain the same category throughout the field management plan. The FAA agrees that if takeoff EPR application does not change, the operator will likely remain a category 2 operator. However, additional data suggests that an operator may have a shift in its takeoff EPR values due to various reasons, like route changes. Since the possibility exists of an operator changing their takeoff EPR application, the FAA requires a takeoff EPR re-assessment to ensure proper categorization of the operator. This commenter objects to the retest requirement of Testing-21 on any shop-visited engine. This commenter states that without detailed analysis on the effect of module separation, retest requirement against every engine that has module separation for shop minor maintenance would result in an unnecessary burden to the operator without any benefit on surge risk reduction. The FAA agrees. However, to identify the workscopes that may be exempt from Testing-21 would require knowledge of the specific details of each workscope. By using the AMOC process, each workscope can be evaluated on a case-by-case basis to ensure continued stability of the engine.

Change the Limitation for Configuration F Engines

Another commenter requests that the FAA change the limitation for Configuration F engines from 800 cycles to an option of either 800 cycles or the applicable threshold in Table 2 or Table 3 in the NPRM, whichever is greater. The FAA disagrees. The cyclic limit threshold manages overall risk, taking into account the HPC surge margin

deterioration. Using the commenter's example, this AD requires that if a Configuration C engine is in the shop at 300 cycles and performs Testing-21, it becomes a Configuration F engine and must repeat Testing-21 within 800 cycles. Allowing it to continue in-service until its stagger limit of 2,100 cycles before requiring Testing-21, as the commenter suggests, doesn't take into account the possible HPC surge margin deterioration effects created due to the malfunction that brought the engine into the overhaul shop. Depending upon the workscope of this engine, a technical argument could be developed to support the engine remaining on-wing longer than the 800 cycles. However, this must be done on a case-by-case basis to fully evaluate the workscope and its effect on engine stability. If the workscope was non-evasive to the engine's HPC surge margin, the AMOC process could be used by the operator. This commenter also states that the most current published dates of the PW4000 engine manual (EM) 50A605, 71–00–00, TESTING–21 procedure, and PW4000 CIR Manual 51A357, Section 72–35–68 Inspection/Check-04, are March 15, 2002. The FAA agrees and the appropriate changes have been made to the AD.

Question Regarding Off-Wing and On-Wing Maintenance

This commenter also questions if proposed paragraph (i)(1) is applicable to both on-wing and off-wing maintenance. Proposed paragraph (i)(1) is only applicable during a shop visit when the HPC is not overhauled and a major engine flange separation does not take place. If complying with the listed AD's in proposed paragraph (k) Testing-21 is required whenever any quantity of fan blades are replaced with new blades, overhauled or have the leading edges recontoured. This commenter also requests that the FAA consider the following as an exception to proposed paragraph (m)(3): Testing-21 would not be required on engines with more than 800 cycles remaining to the thresholds listed in Tables 2 and 3, when separating a major flange if the purpose of the workscope was to repair oil leaks in the forward sump, 2.5 bleed system, exhaust case cracks, or to replace fan exit vanes, provided no other work was done to the gas path. The commenter also states that the exception should also permit the removal of gas path items provided they are returned to the same engine. The FAA agrees that depending upon the workscope, some exceptions to this paragraph can be made. However, specific details of the entire workscope would have to be identified to assess the possible effects of HPC surge margin. The AMOC process allows for a case-by-case review of the overall workscope. Those that do not affect HPC surge margin could be candidates for an AMOC. This commenter also suggests an additional requirement be added to proposed paragraph (r)(2)(ii). This paragraph currently states that Configuration E engines require removal within 25 cycles, or immediately, based on troubleshooting. But it does not state what to do with the engine. The commenter suggests adding a requirement to remove the cutback stator configuration from the engine. The FAA understands the concern. After the engine removal, HPC overhaul is required before return to service. Although not economically practical, an HPC overhaul could occur without replacing the cutback stators and this engine could be returned to service until it reaches 1,300 cycles-since-new limit. As long as this engine is removed from service before accumulating 1,300 CSN, it meets the risk criteria of the field management plan that is acceptable to the FAA. Therefore, this paragraph has not been modified but now appears as paragraph (q)(2)(ii).

Disagree With Economic Analysis

A commenter disagrees with the economic analysis as noted in the NPRM. The increased restrictions on the Boeing 747 fleet in addition to PW's projected Testing-21 failure rate of 30% increased the number of Testing-21 performed and increased the required HPC overhauls for the years 2002 and 2003. The FAA agrees. The economic analysis also needs to include the effects of the reduced limits on the Phase 3, first run subpopulation engines. The economic analysis has been revised. Based on field data, the non-subpopulation engine Testing-21 failure rate is 12% and not 30%. In addition, the subpopulation engine Testing-21 failure rate is 20%. The economic analysis has been revised to include these failure rates, the increased restrictions on the Boeing 747 fleet, and the reduced limits on the Phase 3, first run subpopulation engines. Although the FAA recognizes that the subpopulation fleet management plan and the added restrictions on the Boeing 747 fleet have increased the economic burden to some of the operators, the FAA believes these actions are necessary to safely manage the Boeing 747 fleet risk.

Concern for Engines Needing To Use Testing-21 Following Split Shipment

A commenter is concerned that newly overhauled engines which are split at flange E for split shipment transportation reasons must perform Testing-21 based on the stability testing requirements of the AD. This would become an open loop if the customer had no test cell. The FAA agrees, and has added a paragraph to exempt split-shipped engines from Testing-21, if the engine's HPC was overhauled or Testing-21 was successfully passed following the engine shop visit.

Question Regarding Category 2 Criteria

One commenter is currently operating to the category 2 limits in accordance with AD 2001–25–11. Under the requirements of the proposal, this operator, who has a small fleet, will not have accumulated 200,000 cycles and, therefore, will no longer be a category 2 operator. In addition, because they will not have enough EPR data to support operation to category 1 limits, they will be required to operate to the category 3 limits. This operator has asked the FAA to reconsider their fleet categorization. The FAA has reviewed this situation with the OEM. The OEM has suggested it may be feasible for the operator to obtain a sufficient amount of EPR data that can be used as the basis for an AMOC to operate to Category 1 limits. By using the AMOC process, the feasibility of an alternate method can be evaluated on a case-by-case basis.

One commenter has no objections to the rule as proposed.

Changes to A300 Category 1, 2, 3 Criteria

In addition, the FAA has reviewed additional data from the OEM regarding changes to the A300 Category 1, 2, 3 Takeoff EPR criteria based on further assessment of A300 operator takeoff data. The OEM data suggests a need to change the limits of the percentage of takeoffs greater than 1.45 takeoff EPR data to values that are less conservative relative to the original limits in the NPRM. The original NPRM values were conservative to allow additional time to access the takeoff EPR field data. The FAA has reviewed the data and agrees that changes are necessary. Therefore, the limits in paragraphs (f)(9), (h)(1), and (h)(2) in this AD have been revised. Also, the FAA has reviewed and approved PW SB PW4ENG–72–749 and Chromalloy Florida Repair Procedure 02 CFL–024–0 as acceptable methods to repair the HPC inner case mid hook. Therefore, these procedures are incorporated by reference and are added

as additional methods of compliance to paragraph (k)(2)(i) of this AD.

After careful review of the available data, including the comments noted above, the FAA has determined that air safety and the public interest require the adoption of the rule with the changes described previously. The FAA has determined that these changes will not increase the scope of the AD. The FAA has determined, however, that an additional opportunity for comment should be afforded because of the changes made to this AD.

Economic Analysis

There are approximately 2,115 engines of the affected design in the worldwide fleet. The FAA estimates that 711 engines installed on airplanes of U.S. registry would be affected by this AD. The economic analysis estimates an annual cost from November 2002 through the end of March 2007, (4.4 years or 53 months) at which time the ring style HPC case is predicted to be 100% incorporated into the fleet. However, the cost of the ring case incorporation is not being assessed within this analysis. The FAA estimates 30 test cell stability tests per month based on the latest Testing-21 reports from the total fleet. Over 4.4 years (or 53 months), the FAA estimates a fleetwide total of 1590 test cell stability tests or on average 361 test cell stability tests per year. For the domestic fleet (33.6% of worldwide fleet), a yearly rate of 121 test cell stability tests per year is estimated. Assuming a 12% Testing-21 failure rate using the latest statistics, 14 engines per year for the domestic fleet would require an HPC overhaul. In addition, the FAA estimates 2 surges per month based on April 2001 through September 2002 actual Group 3 surge events. Over 4.4 years (or 53 months), the FAA estimates a total of 106 HPC surges and on average 24 fleetwide surges per year. For the domestic fleet, the FAA estimates 8 surges per year. Therefore, the FAA estimates for the domestic fleet 121 test cell stability tests per year and 22 HPC overhauls per year. It is estimated that the cost to industry of a test cell stability test will average $15,000 and an HPC overhaul will cost approximately $400,000. Based on these figures, the total average annual cost of the AD to U.S. operators is estimated to be $10,615,000.

Regulatory Analysis

This final rule does not have federalism implications, as defined in Executive Order 13132, because it would not have a substantial direct effect on the States, on the relationship between the national government and the States, or on the distribution of power and responsibilities among the various levels of government. Accordingly, the FAA has not consulted with state authorities prior to publication of this final rule.

The FAA has determined that this regulation is an emergency regulation that must be issued immediately to correct an unsafe condition in aircraft, and is not a ''significant regulatory action'' under Executive Order 12866. It has been determined further that this action involves an emergency regulation under DOT Regulatory Policies and Procedures (44 FR 11034, February 26, 1979). If it is determined that this emergency regulation otherwise would be significant under DOT Regulatory Policies and Procedures, a final regulatory evaluation will be prepared and placed in the Rules Docket. A copy of it, if filed, may be obtained from the Rules Docket at the location provided under the caption **ADDRESSES**.

List of Subjects in 14 CFR Part 39

Air transportation, Aircraft, Aviation safety, Incorporation by reference, Safety.

Adoption of the Amendment

Accordingly, pursuant to the authority delegated to me by the Administrator, the Federal Aviation Administration amends part 39 of the Federal Aviation Regulations (14 CFR part 39) as follows:

PART 39—AIRWORTHINESS DIRECTIVES

1. The authority citation for part 39 continues to read as follows:

Authority: 49 U.S.C. 106(g), 40113, 44701.

§ 39.13 [Amended]

2. Section 39.13 is amended by removing Amendment 39–12564 (67 FR 1, January 2, 2002), and by adding the following new airworthiness directive:

2002–21–10 Pratt & Whitney: Amendment 39–12916. Docket No. 2000–NE–47–AD. Supersedes AD 2001–25–11, Amendment 39–12564.

Applicability: This airworthiness directive (AD) is applicable to Pratt and Whitney (PW) model PW4050, PW4052, PW4056, PW4060, PW4060A, PW4060C, PW4062, PW4152, PW4156, PW4156A, PW4158, PW4160, PW4460, PW4462, and PW4650 turbofan engines. These engines are installed on, but not limited to, certain models of Airbus Industrie A300, Airbus Industrie A310, Boeing 747, Boeing 767, and McDonnell Douglas MD–11 series airplanes.

Note 1: This AD applies to each engine identified in the preceding applicability provision, regardless of whether it has been modified, altered, or repaired in the area subject to the requirements of this AD. For engines that have been modified, altered, or repaired so that the performance of the requirements of this AD is affected, the owner/operator must request approval for an alternative method of compliance in accordance with paragraph (s) of this AD. The request should include an assessment of the effect of the modification, alteration, or repair on the unsafe condition addressed by this AD; and, if the unsafe condition has not been eliminated, the request should include specific proposed actions to address it.

Compliance: Compliance with this AD is required as indicated, unless already done.

To prevent engine takeoff power losses due to HPC surges, do the following:

(a) When complying with this AD, determine the configuration of each engine on each airplane using the following Table 1:

TABLE 1.—ENGINE CONFIGURATION LISTING

Configuration	Configuration description	Description
(1) Phase 1 without high pressure turbine (HPT) 1st turbine vane cut back (1TVCB).	A	Engines that did not incorporate the Phase 3 configuration at the time they were originally manufactured, or have not been converted to Phase 3 configuration; and have not incorporated HPT 1TVCB using any revision of service bulletin (SB) PW4ENG 72–514.
(2) Phase 1 with 1TVCB	B	Same as Configuration A except that HPT 1TVCB has been incorporated using any revision of SB PW4ENG 72–514.
(3) Phase 3, 2nd Run	C	Engines that incorporated the Phase 3 configuration at the time they were originally manufactured, or have been converted to the Phase 3 configuration during service; and that have had at least one high pressure compressor (HPC) overhaul since new.
(4) Phase 3, 1st Run	D	Same as Configuration C except that the engine has not had an HPC overhaul since new, except those engines that are defined as Configuration Designator G.

TABLE 1.—ENGINE CONFIGURATION LISTING—Continued

Configuration	Configuration description	Description
(5) HPC Cutback Stator Configuration Engines.	E	Engines that currently incorporate any revision of SB's PW4ENG72–706, PW4ENG72–704, or PW4ENG72–711.
(6) Engines that have passed Testing-21	F	Engines which have successfully passed Testing-21 performed in accordance with paragraph (i) of this AD. Once an engine has passed a Testing-21, it will remain a Configuration F engine until the HPC is overhauled, or is replaced with a new or overhauled HPC.
(7) Phase 3, 1st Run Subpopulation Engines. These engines are identified by model and serial numbers (SN's) as follows: PW4152: SN 724942 through SN 724944 inclusive; PW4158: SN 728518 through SN 728533 inclusive; PW4052, PW4056, PW4060, PW4060A, PW4060C, PW4062: SN 727732 through SN 728000 inclusive and SN 729001 through SN 729010 inclusive; PW4460, PW4462: SN 733813 through SN 733840 inclusive.	G	Engines that incorporated the Phase 3 configuration at the time they were originally manufactured, that were built from August 29, 1997 up to the incorporation of the HPC inner rear case with the Haynes material rear hook at the original engine manufacturer and have not had an HPC overhaul since new.
(8) Engines from Configuration G that have passed Testing-21.	H	Engines that have successfully passed Testing-21 performed in accordance with paragraph (i) of this AD. Once an engine has passed a Testing-21, it will remain a Configuration H engine until the HPC is overhauled, or is replaced with a new or overhauled HPC.

Configuration E Engines Installed on Boeing 747, 767, and MD–11 Airplanes

(b) For Configuration E engines, do the following:

(1) Before further flight, limit the number of engines with Configuration E as described in Table 1 of this AD, to one on each airplane.

(2) Remove all engines with Configuration E from service before accumulating 1,300 cycles-since-new (CSN) or cycles-since-conversion to Configuration E, whichever is later.

Configuration G and H Engines Installed on Boeing 747, 767, MD–11, and Airbus A300 and A310 Airplanes

(c) For Configuration G engines installed on Boeing 747, 767, MD–11, and Airbus A300 and A310 airplanes, except as provided in paragraph (b) of this AD:

(1) Within 30 days after the effective date of this AD, remove from service engines that exceed the CSN limits for Configuration G engines listed in Row A of the following Table 2.

TABLE 2.—CONFIGURATION G AND H LIMITS

Row	Configuration designator	B747 PW4056	B767 PW4052	B767 PW4056	B767 PW4060 PW4060A PW4060C PW4062	MD–11 PW4460 PW4462	A300/310 PW4152 4156A PW4158
A	G	3,000 CSN	4,400 CSN	3,600 CSN	3,000 CSN	2,800 CSN	4,400 CSN
B	G	1,700 CSN	3,000 CSN	2,100 CSN	1,350 CSN	1,150 CSN	2,800 CSN
C	H	600 cycles-since-passing Testing-21 (CST)	600 CST	600 CST	600 CST	600 CST	600 CST

(2) Within 60 days after the effective date of this AD, remove from service engines that exceed the CSN limits for Configuration G engines listed in Row B of Table 2 of this AD.

(3) Thereafter, ensure that no Configuration G engine exceeds the HPC CSN limits listed in Row B of Table 2 of this AD.

(4) Within 60 days after the effective date of this AD, remove from service engines that exceed the CST limits for Configuration H engines listed in Row C of Table 2 of this AD.

(5) Thereafter, ensure that no Configuration H engine exceeds the CST limits listed in Row C of Table 2 of this AD.

(6) Configuration G and H engines may be returned to service after completing paragraph (i) of this AD.

Engines Installed on Boeing 767 and MD–11 Airplanes

(d) For engines installed on Boeing 767 and MD–11 airplanes, except as provided in paragraph (b) and (c) of this AD, within 50 airplane cycles after the effective date of this AD, limit the number of engines that exceed the HPC CSN, HPC cycles-since-overhaul (CSO), or HPC CST limits in Table 3 of this AD, to not more than one engine per airplane. Thereafter, ensure that no more than one engine per airplane exceeds the HPC CSN, CSO, or CST limit in Table 3 of this AD. *See* paragraph (i) of this AD for return to service requirements.

Engines Installed on Boeing 747 Airplanes

(e) Except as provided in paragraph (b) and (c) of this AD, within 50 airplane cycles after the effective date of this AD, and thereafter, manage the engine configurations installed on Boeing 747 airplanes as follows:

(1) Limit the number of Configuration A, B, C, or E engines that exceed the HPC CSN or HPC CSO limits listed in Table 3 of this AD, to not more than one engine per airplane. Table 3 follows:

TABLE 3.—ENGINE LIMITS FOR BOEING AIRPLANES

Configuration designator	B747–PW4056	B767–PW4052	B767–PW4056	B767–PW4060 PW4060A PW4060C PW4062	MD–11 PW4460 PW4462
A	1,400 CSN or CSO	3,000 CSN or CSO	1,600 CSN or CSO	900 CSN or CSO	800 CSN or CSO.
B	2,100 CSN or CSO	4,400 CSN or CSO	2,800 CSN or CSO	2,000 CSN or CSO	1,200 CSN or CSO.
C	2,100 CSO	4,400 CSO	2,800 CSO	2,000 CSO	1,300 CSO.
D	2,600 CSN	4,400 CSN	3,000 CSN	2,200 CSN	2,000 CSN.
E	750 CSN or CSO	750 CSN or CSO	750 CSN or CSO	750 CSN or CSO	750 CSN or CSO.
F	800 CST	800 CST	800 CST	800 CST	800 CST.

(2) The single Configuration A, B, C, or E engine per airplane that exceeds the HPC CSN or CSO limits listed in Table 3 of this AD, must be limited to 2,600 HPC CSN or CSO for Configuration A, B, or C engines, or 1,300 HPC CSN or cycles-since-conversion to Configuration E, whichever is later, for Configuration E engines.

(3) Remove from service Configuration D engines before accumulating 2,600 CSN.

(4) Remove from service Configuration F engines before accumulating 800 CST.

(5) Configuration A, B, C, D, and F engines may be returned to service after completing paragraph (i) of this AD.

Engines Installed on Airbus A300 and A310 Airplanes

(f) Use paragraphs (f)(1) through (f)(9) to determine which Airbus A300 PW4158 engine category 1, 2, or 3 limits of the following Table 4 of this AD apply to your engine fleet:

TABLE 4.—ENGINE LIMITS FOR AIRBUS AIRPLANES

Configuration designator	A300 PW4158 category 1, and A310 PW4156 and PW4156A	A300 PW4158 category 2, and A310 PW4152	A300 PW4158 category 3
A	900 CSN or CSO	1,850 CSN or CSO	500 CSN or CSO.
B	2,200 CSN or CSO	4,400 CSN or CSO	1,600 CSN or CSO.
C	2,200 CSO	4,400 CSO	1,600 CSO.
D	4,400 CSN	4,400 CSN	4,400 CSN.
E	Not Applicable	Not Applicable	Not Applicable.
F	800 CST	800 CST	800 CST.

(1) Determine the number of Group 3 takeoff surges experienced by engines in your fleet before April 13, 2001. Count surge events for engines that had an HPC overhaul and incorporated either SB PW 4ENG 72–484 or SB PW4ENG 72–575 at the time of overhaul. Do not count surge events for engines that did not have the HPC overhauled (*i.e.* 1st run engine) or had the HPC overhauled but did not incorporate either SB PW4ENG 72–484 or SB PW4ENG 72–575. See paragraph (r)(5) of this AD for a definition of a Group 3 takeoff surge.

(2) Determine the number of cumulative HPC CSO accrued by engines in your fleet before April 13, 2001. Count HPC CSO for engines that had an HPC overhaul and incorporated either SB PW4ENG 72–484 or SB PW4ENG 72–575 at the time of overhaul. Do not count HPC CSO accrued on your engines while operating outside your fleet.

(3) Calculate the surge rate by dividing the number of Group 3 takeoff surges determined in paragraph (f)(1) of this AD, by the number of cumulative HPC CSO determined in paragraph (f)(2) of this AD, and then multiply by 1,000.

(4) If the surge rate calculated in paragraph (f)(3) of this AD is less than 0.005, go to paragraph (f)(5) of this AD. If the surge rate calculated in paragraph (f)(3) of this AD is greater than or equal to 0.005, go to paragraph (f)(6) of this AD.

(5) If the cumulative HPC CSO determined in paragraph (f)(2) of this AD is greater than or equal to 200,000 cycles, use A300 PW4158 Category 2 limits of Table 4 of this AD. If less than 200,000 cycles, go to paragraph (f)(7) of this AD.

(6) If the surge rate calculated in paragraph (f)(3) of this AD is greater than 0.035, use A300 PW 4158 Category 3 limits of Table 4 of this AD. If less than or equal to 0.035, go to paragraph (f)(7) of this AD.

(7) Determine the percent of takeoffs with greater than a 1.45 Takeoff engine pressure ratio (EPR) data for engines operating in your fleet. Count takeoffs from a random sample of at least 700 airplane takeoffs that has occurred over at least a 3-month time period, for a period beginning no earlier than 23 months prior to the effective date of this AD. See paragraph (r)(6) of this AD for definition of Takeoff EPR data.

(8) If there is insufficient data to satisfy the criteria of paragraph (f)(7) of this AD, use A300 PW4158 Category 3 limits of Table 4 of this AD.

(9) If the percentage of takeoffs with greater than a 1.45 Takeoff EPR data determined in paragraph (f)(7) of this AD is greater than 31%, use A300 PW 4158 Category 3 limits listed in Table 4 of this AD. If the percentage of takeoffs with greater than a 1.45 Takeoff EPR data determined in paragraph (f)(7) of this AD is less than or equal to 31%, use A300 PW 4158 Category 1 limits listed in Table 4 of this AD.

(g) For engines installed on Airbus A300 or A310 airplanes, except as provided in paragraph (c) of this AD, within 50 airplane cycles after the effective date of this AD, limit the number of engines that exceed the CSN, CSO, or CST limits listed in Table 4 of this AD, to no more than one engine per airplane. Thereafter, ensure that no more than one engine per airplane exceeds the HPC CSN, CSO, or CST limits listed in Table 4 of this AD. See paragraph (i) of this AD for return to service requirements.

(h) For Airbus A300 PW4158 engine operators, except those operators whose engine fleets are determined to be Category 3 classification based on surge rate in accordance with paragraph (f)(6) of this AD, re-evaluate your fleet category within 6 months from the effective date of this AD, and thereafter, at intervals not to exceed 6 months, using the following criteria:

(1) For operators whose engine fleets are initially classified as Category 1 or 3 in accordance with paragraph (f) of this AD, determine the percent of takeoffs with greater than a 1.45 Takeoff EPR data for engines operating in your fleet. Count takeoffs from a sample of at least 200 takeoffs that occurred over the most recent six month time period since the last categorization was determined, or the total number of takeoffs accumulated over 6 months if less than 200 takeoffs. See

paragraph (r)(6) of this AD for definition of takeoff EPR data.

(i) If there is insufficient data to satisfy the criteria of paragraph (h)(1) of this AD, use A300 PW4158 Category 3 limits listed in Table 4 of this AD.

(ii) If the percentage of takeoffs with greater than a 1.45 Takeoff EPR data determined in paragraph (h)(1) of this AD is greater than 31%, use A300 PW4158 Category 3 limits listed in Table 4 of this AD.

(iii) If the percentage of takeoffs with greater than a 1.45 Takeoff EPR data determined in paragraph (h)(1) of this AD is less than or equal to 31%, use A300 PW4158 Category 1 limits listed in Table 4 of this AD.

(2) For operators whose engine fleets are initially classified as Category 2 in accordance with paragraph (f) of this AD, determine the percent of takeoffs with greater than a 1.45 Takeoff EPR data for engines operating in your fleet. Count takeoffs from a sample of at least 200 takeoffs that occurred over the most recent six month time period since the last categorization was determined, or the total number of takeoffs accumulated over 6 months if less than 200 takeoffs. *See* paragraph (r)(6) of this AD for definition of takeoff EPR data.

(i) If there is insufficient data to satisfy the criteria of paragraph (h)(2) of this AD, use A300 PW4158 Category 3 limits listed in Table 4 of this AD.

(ii) If the percentage of takeoffs with greater than a 1.45 Takeoff EPR data determined in paragraph (h)(2) of this AD is greater than 37%, use A300 PW4158 Category 3 limits listed in Table 4 of this AD.

(iii) If the percentage of takeoffs with greater than a 1.45 Takeoff EPR data determined in paragraph (h)(2) of this AD is greater than or equal to 21% and less than or equal to 37%, use A300 PW4158 Category 1 limits listed in Table 4 of this AD.

(iv) If the percentage of takeoffs with greater than a 1.45 Takeoff EPR data determined in paragraph (h)(2) of this AD is less than 21%, use A300 PW4158 Category 2 limits listed in Table 4 of this AD.

Return to Service Requirements for All Engines (Testing-21)

(i) Engines removed from service in accordance with paragraph (c), (d), (e), or (g) of this AD may be returned to service under the following conditions:

(1) After passing a cool-engine fuel spike stability test (Testing-21) that has been done in accordance with one of the following PW4000 Engine Manuals (EM) as applicable, except for engines configured with Configuration E, or engines that have experienced a Group 3 takeoff surge:

(i) PW4000 EM 50A443, 71–00–00, TESTING–21, dated March 15, 2002.

(ii) PW4000 EM 50A822, 71–00–00, TESTING–21, dated March 15, 2002.

(iii) PW4000 EM 50A605, 71–00–00, TESTING–21, dated March 15, 2002; or

(2) Engines tested before the effective date of this AD, in accordance with any of the following PW4000 EM Temporary Revisions, meet the requirements of Testing-21:

(i) PW4000 EM 50A443, Temporary Revision No. 71–0026, dated November 14, 2001.

(ii) PW4000 EM50A822, Temporary Revision No. 71–0018, dated November 14, 2001.

(iii) PW4000 EM50A605, Temporary Revision No. 71–0035, dated November 14, 2001; or

(3) Engines tested before the effective date of this AD, in accordance with PW IEN 96KC973D, dated October 12, 2001, meet the requirements of Testing-21; or

(4) The engine HPC was replaced with an HPC that is new from production with no time in service; or

(5) The engine HPC has been overhauled, or the engine HPC replaced with an overhauled HPC with zero cycles since overhaul; or

(6) An engine that is either below or exceeds the limits of Table 3 or Table 4 of this AD may be removed and installed on another airplane without Testing-21, as long as the requirements of paragraph (c), (d), (e), or (g) of this AD are met at the time of engine installation.

Phase 0 or Phase 1, FB2T or FB2B Fan Blade Configurations

(j) For engines with Phase 0 or Phase 1, FB2T or FB2B fan blade configurations complying with the requirements of AD 2001–09–05, (66 FR 22908, May 5, 2001), AD 2001–09–10, (66 FR 21853, May 2, 2001), or AD 2001–01–10, (66 FR 6449, January 22, 2001), do the following:

(1) Operators complying with the AD's listed in paragraph (j) of this AD using the weight restriction compliance method, must perform Testing-21 in accordance with paragraph (i)(1) of this AD whenever any quantity of fan blades are replaced with new fan blades, overhauled fan blades, or with fan blades having the leading edges recontoured after the effective date of this AD, if during the shop visit the HPC is not overhauled and separation of a major engine flange, located between ''A'' flange and ''T'' flange, does not occur.

(2) If an operator changes from the weight restriction compliance method to the fan blade leading edge recontouring method after the effective date of this AD, testing-21 in accordance with paragraph (i)(1) of this AD is required each time fan blade leading edge recontouring is done, if the fan blades accumulate more than 450 cycles since new or since fan blade overhaul, or since the last time the fan blade leading edges were recontoured.

Minimum Build Standard

(k) Use the following minimum build standards:

(1) After the effective date of this AD, do not install an engine with HPC and HPT modules where the CSO of the HPC is 1,500 cycles or greater than the CSN or CSO of the HPT.

(2) For any engine that undergoes an HPC overhaul after the effective date of this AD:

(i) Inspect the HPC mid hook and rear hook of the HPC inner case for wear in accordance with PW Clean, Inspect and Repair (CIR) Manual PN 51A357, section 72–35–68 Inspection/Check-04, indexes 8–11, dated September 15, 2001. If the HPC rear hook is worn beyond serviceable limits, replace the HPC inner case rear hook with an improved durability hook in accordance with PW SB PW4ENG 72–714, Revision 1, dated November 8, 2001, or Chromalloy Florida Repair Procedure 00 CFL–039–0, dated December 27, 2000. If the HPC inner case mid hook is worn beyond serviceable limits, repair the HPC inner case mid hook in accordance with PW CIR PN 51A357 section 72–35–68, Repair-16, dated June 15, 1996, or in accordance with PW SB PW4ENG 72–749, dated June 17, 2002, or Chromalloy Florida Repair Procedure 02 CFL–024–0, dated September 15, 2002.

(ii) After the effective date of this AD, any engine that undergoes an HPC overhaul may not be returned to service unless it meets the build standard of PW SB PW4ENG 72–484, PW4ENG 72–486, PW4ENG 72–514, and PW4ENG 72–575. Engines that incorporate the Phase 3 configuration already meet the build standard defined by PW SB PW4ENG 72–514.

(3) After the effective date of this AD, any engine that undergoes separation of the HPC and HPT modules must not be installed on an airplane unless it meets the build standard of PW SB PW4ENG 72–514. Engines that incorporate the Phase 3 configuration already meet the build standard defined by PW SB PW4ENG 72–514.

Stability Testing Requirements

(l) After the effective date of this AD, Testing-21 must be performed in accordance with paragraph (i)(1) of this AD, before an engine can be returned to service after having undergone maintenance in the shop, except under any of the following conditions:

(1) The engine HPC was overhauled, or replaced with an overhauled HPC with zero cycles since overhaul; or

(2) The engine HPC was replaced with an HPC that is new from production with no time in service; or

(3) The shop visit did not result in the separation of a major engine flange located between ''A'' flange and ''T'' flange; or

(4) Engines with an HPC having zero CSN or CSO, or engines that successfully passed Testing-21 with zero CST; and are split at Flange E for transportation reasons as specified in the applicable Storage/Transport section of the applicable Engine Manual.

Thrust Rating Changes, Installation Changes, and Engine Transfers

(m) When a thrust rating change has been made by using the Electronic Engine Control (EEC) programming plug, or an installation change has been made during an HPC overhaul period, use the lowest cyclic limit of Table 3 or Table 4 of this AD, associated with any engine thrust rating change or with any installation change made during the affected HPC overhaul period. *See* paragraph (r)(1) for definition of HPC overhaul period.

(n) When a PW4158 engine is transferred to another PW4158 engine operator whose engine fleet has a different category, use the lowest cyclic limit in Table 4 of this AD that was used or will be used during the affected HPC overhaul period.

(o) When a PW 4158 engine operator whose engine fleet changes category in accordance with paragraph (h) of this AD,

use the lowest cyclic limits in Table 4 of this AD that were used or will be used during the affected HPC overhaul period.

(p) Engines with an HPC having zero CSN or CSO at the time of thrust rating change, or installation change, or engine transfer between PW4158 engine operators, or subsequent change in operator engine fleet category in accordance with paragraph (h) of this AD in the direction of lower to higher Table 4 limits, are exempt from the lowest cyclic limit requirement in paragraphs (m), (n), and (o) of this AD.

Engines That Surge

(q) For engines that experience a surge, and after troubleshooting procedures are completed for airplane-level surge during forward or reverse thrust, do the following:

(1) For engines that experience a Group 3 takeoff surge, remove the engine from service before further flight and perform an HPC overhaul.

(2) For any engine that experiences a forward or reverse thrust surge at EPR's greater than 1.25 that is not a Group 3 takeoff surge, do the following:

(i) For Configuration A, B, C, D, F, G, and H engines, remove engine from service within 25 CIS or before further flight if airplane-level troubleshooting procedures require immediate engine removal, and perform Testing-21 in accordance with paragraph (i)(1) of this AD.

(ii) For Configuration E engines, remove engine from service within 25 CIS or before further flight if airplane-level troubleshooting procedures require immediate engine removal.

Definitions

(r) For the purposes of this AD, the following definitions apply:

(1) An HPC overhaul is defined as restoration of the HPC stages 5 through 15 blade tip clearances to the limits specified in the applicable fits and clearances section of the engine manual.

(2) An HPC overhaul period is defined as the time period between HPC overhauls.

(3) An HPT overhaul is defined as restoration of the HPT stage 1 and 2 blade tip clearances to the limits specified in the applicable fits and clearances section of the engine manual.

(4) A Phase 3 engine is identified by a (−3) suffix after the engine model number on the data plate if incorporated at original manufacture, or a ''CN'' suffix after the engine serial number if the engine was converted using PW SB's PW4ENG 72–490, PW4ENG 72–504, or PW4ENG 72–572 after original manufacture.

(5) A Group 3 takeoff surge is defined as the occurrence of any of the following engine symptoms that usually occur in combination during an attempted airplane takeoff operation (either at reduced, derated or full rated takeoff power setting) after takeoff power set, which can be attributed to no specific and correctable fault condition after completing airplane-level surge during forward thrust troubleshooting procedures:

(i) Engine noises, including rumblings and loud ''bang(s).''

(ii) Unstable engine parameters (EPR, N1, N2, and fuel flow) at a fixed thrust setting.

(iii) Exhaust gas temperature (EGT) increase.

(iv) Flames from the inlet, the exhaust, or both.

(6) Takeoff EPR data is defined as Maximum Takeoff EPR if takeoff with Takeoff-Go-Around (TOGA) is selected or Flex Takeoff EPR if takeoff with Flex Takeoff (FLXTO) is selected. Maximum Takeoff EPR or Flex Takeoff EPR may be recorded using any of the following methods:

(i) Manually recorded by the flight crew read from the Takeoff EPR power management table during flight preparation (*see* Aircraft Flight Manual (AFM) chapter 5.02.00 and 6.02.01, or Flight Crew Operation Manual (FCOM) chapter 2.09.20) and then adjusted by adding 0.010 to the EPR value recorded; or

(ii) Automatically recorded during Takeoff at 0.18 Mach Number (Mn) (between 0.15 and 0.20 Mn is acceptable) using an aircraft automatic data recording system and then adjusted by subtracting 0.010 from the EPR value recorded; or

(iii) Automatically recorded during takeoff at maximum EGT, which typically occurs at 0.25–0.30 Mn, using an aircraft automatic data recording system.

Alternative Methods of Compliance

(s) An alternative method of compliance or adjustment of the compliance time that provides an acceptable level of safety may be used if approved by the Manager, Engine Certification Office (ECO). Operators must submit their requests through an appropriate FAA Principal Maintenance Inspector, who may add comments and then send it to the Manager, ECO.

Note 2: Information concerning the existence of approved alternative methods of compliance with this airworthiness directive, if any, may be obtained from the ECO.

Special Flight Permits

(t) Special flight permits may be issued in accordance with §§ 21.197 and 21.199 of the Federal Aviation Regulations (14 CFR 21.197 and 21.199) to operate the airplane to a location where the requirements of this AD can be done.

Testing-21 Reports

(u) Within 60 days of test date, report the results of the cool-engine fuel spike stability assessment tests (Testing-21) to the ANE–142 Branch Manager, Engine Certification Office, 12 New England Executive Park, Burlington, MA 01803–5299, or by electronic mail to *9-ane-surge-ad-reporting@faa.gov.* Reporting requirements have been approved by the Office of Management and Budget and assigned OMB control number 2120–0056. Be sure to include the following information:

(1) Engine serial number.

(2) Engine configuration designation per Table 1 of this AD.

(3) Date of the cool-engine fuel spike stability test.

(4) HPC Serial Number, and HPC time and cycles-since-new and since-compressor-overhaul at the time of the test.

(5) Results of the test (Pass or Fail).

Documents That Have Been Incorporated by Reference

(v) The actions must be done in accordance with the following Pratt and Whitney (PW) service bulletin (SB), Internal Engineering Notice (IEN), Temporary Revisions (TR's), Clean, Inspection, and Repair Manual (CIR) repair procedures, engine manual (EM) sections, and Chromalloy Florida Repair Procedure:

Document No.	Pages	Revision	Date
PW SB PW4ENG72–714	1–2	1	Nov. 8, 2001.
	3	Original	June 27, 2000.
	4	1	Nov. 8, 2001.
	5–12	Original	June 27, 2001.
Total pages: 12			
PW SB PW4ENG72–749	All	Original	June 17, 2002.
Total pages: 12			
PW IEN 96KC973D	All	Original	Oct. 12, 2001.
Total pages: 19			
PW TR 71–0018	All	Original	Nov. 14, 2001.
Total pages: 24			
PW TR 71–0026	All	Original	Nov. 14, 2001.
Total pages: 24			
PW TR 71–0035	All	Original	Nov. 14, 2001.
Total pages: 24			
PW CIR 51A357, Section 72–35–68, Inspection/Check-04, Indexes 8–11	All	Original	Sept. 15, 2001.
Total pages: 5			
PW CIR 51A357, Section 72–35–68, Repair 16	All	Original	June 15, 1996.

Document No.	Pages	Revision	Date
Total pages: 1			
PW4000 EM 50A443, 71–00–00, TESTING–21	All	Original	Mar. 15, 2002.
Total pages: 20			
PW4000 EM 50A822, 71–00–00, TESTING–21	All	Original	Mar. 15, 2002.
Total pages: 20			
PW4000 EM 50A605, 71–00–00, TESTING–21	All	Original	Mar. 15, 2002.
Total pages: 20			
Chromalloy Florida Repair Procedure, 00 CFL–039–0			
Summary	1–3	Original	Dec. 27, 2000.
Insp/chk-01	801	Original	Dec. 27, 2000.
Repair-01	901–903	Original	Dec. 27, 2000.
Total pages: 7			
Chromalloy Florida Repair Procedure, 02 CFL–024–0			
Summary	1–5	Original	Sept. 15, 2002.
Inspection	801–802	Original	Sept. 15, 2002.
Repair	901–906	Original	Sept. 15, 2002.
Total pages: 13			

The incorporation by reference of SB PW4ENG72–714, dated November 8, 2001, IEN 96KC973D, dated October 12, 2001, TR 71–0018, TR 71–0026, and TR 71–0035, all dated November 14, 2001, CIR 51A357, section 72–35–68, Inspection/Check-04, Indexes 8–11, dated September 15, 2001, and CIR 51A357, section 72–35–68, Repair 16, dated June 15, 1996 was approved by the Director of the Federal Register as of January 17, 2002 (67 FR 1, January 2, 2002). The incorporation by reference of SB PW4ENG72–749, dated June 17, 2002, EM 50A443, section 71–00–00, Testing-21, EM 50A822, section 71–00–00, Testing-21, EM 50A605, and section 71–00–00, Testing-21, all dated March 15, 2002, Chromalloy Florida Repair Procedure, 00 CFL–039–0, dated December 27, 2000, and Chromalloy Florida Repair Procedure, 02 CFL–024–0, dated September 15, 2002, was approved by the Director of the Federal Register on November 12, 2002, in accordance with 5 U.S.C. 552(a) and 1 CFR part 51. Pratt and Whitney document copies may be obtained from Pratt and Whitney, 400 Main St., East Hartford, CT 06108; telephone (860) 565–6600; fax (860) 565–4503. Chromalloy Florida document copies may be obtained from Chromalloy Florida, 630 Anchors St., NW., Walton Beach, FL 32548; telephone (850) 244–7684; fax (850) 244–6322. Copies may be inspected, by appointment, at the FAA, New England Region, Office of the Regional Counsel, 12 New England Executive Park, Burlington, MA; or at the Office of the Federal Register, 800 North Capitol Street, NW., Suite 700, Washington, DC.

Effective Date

(w) This amendment becomes effective on November 12, 2002.

Issued in Burlington Massachusetts, on October 11, 2002.

Mark C. Fulmer,

Acting Manager, Engine and Propeller Directorate, Aircraft Certification Service.

[FR Doc. 02–26909 Filed 10–24–02; 8:45 am]

BILLING CODE 4910–13–P

DEPARTMENT OF TRANSPORTATION

Federal Aviation Administration

14 CFR Part 39

[Docket No. 2000–NM–392–AD; Amendment 39–12921; AD 2002–21–14]

RIN 2120–AA64

Airworthiness Directives; Boeing Model 757–200, –200CB, and –300 Series Airplanes

AGENCY: Federal Aviation Administration, DOT.

ACTION: Final rule.

SUMMARY: This amendment adopts a new airworthiness directive (AD), applicable to certain Boeing Model 757–200, –200CB, and –300 series airplanes. This AD requires determining the part numbers of the master control valve on the pressure bottles that activate the off-wing escape slides, and performing corrective action if necessary. This action is necessary to prevent failure of an escape slide to deploy or inflate correctly, which could cause the slide to be unusable during an emergency evacuation and result in consequent injury to passengers or crewmembers. This action is intended to address the identified unsafe condition.

DATES: Effective November 29, 2002. The incorporation by reference of certain publications listed in the regulations is approved by the Director of the Federal Register as of November 29, 2002.

ADDRESSES: The service information referenced in this AD may be obtained from Boeing Commercial Airplane Group, P.O. Box 3707, Seattle, Washington 98124–2207. This information may be examined at the Federal Aviation Administration (FAA), Transport Airplane Directorate, Rules Docket, 1601 Lind Avenue, SW., Renton, Washington; or at the Office of the Federal Register, 800 North Capitol Street, NW., suite 700, Washington, DC.

FOR FURTHER INFORMATION CONTACT: *Technical Information:* Victor Wicklund, Aerospace Engineer, Airframe Branch, ANM–120S, FAA, Seattle Aircraft Certification Office, 1601 Lind Avenue, SW., Renton, Washington 98055–4056; telephone (425) 227–1426; fax (425) 227–1181.

Other Information: Judy Golder, Airworthiness Directive Technical Editor/Writer; telephone (425) 687–4241, fax (425) 227–1232. Questions or comments may also be sent via the Internet using the following address: *judy.golder@faa.gov*. Questions or comments sent via the Internet as attached electronic files must be formatted in Microsoft Word 97 for Windows or ASCII text.

SUPPLEMENTARY INFORMATION: A proposal to amend part 39 of the Federal Aviation Regulations (14 CFR part 39) to include an airworthiness directive (AD) that is applicable to certain Boeing Model 757–200, –200CB, and –300 series airplanes was published in the **Federal Register** on February 26, 2002 (67 FR 8741). That action proposed to require determining the part numbers of the master control valve on the pressure bottles that activate the off-wing escape slides, and corrective action, if necessary.

Comments

Interested persons have been afforded an opportunity to participate in the making of this amendment. Due consideration has been given to the comments received.

Support for the Proposal

Two commenters concur with the proposed AD. One additional

commenter states that it does not operate any affected airplanes.

Revise Applicability Statement

One commenter requests that the FAA revise the applicability statement to specify ''Model 757–200, –200CB, and –300 series airplanes, line numbers 1 through 905, equipped with an off-wing escape slide system, ...'' The applicability statement of the proposed AD specifies ''Model 757–200, –200CB, and –300 series airplanes, as listed in Boeing Special Attention Service Bulletin 757–25–0214 or 757–25–0216, both dated April 6, 2000, ...'' The commenter states that revising the applicability statement would make it easier to identify affected airplanes without referring to the service information.

The FAA concurs and has revised the applicability statement of this final rule accordingly.

Identify Manufacturers

One commenter requests that we revise paragraphs (a)(1), (a)(2), and (b) of the proposed AD to identify the manufacturers associated with each of the part numbers listed in those paragraphs. The commenter states that this change would eliminate any confusion about the correct part number of the airplane manufacturer or vendor.

We concur and have revised paragraphs (a)(1), (a)(2), and (b) of this final rule accordingly.

Include Instructions to Deactivate Cargo Loading System

One commenter requests that Boeing Special Attention Service Bulletin 757–25–0216, dated April 6, 2000, include instructions to deactivate the aft cargo loading system on Boeing Model 757–300 series airplanes, if such a system is installed, before doing the proposed inspections and corrective actions.

Though the commenter provides no justification for the change, we infer that the commenter makes this recommendation in the interest of the safety of maintenance personnel. While this AD is not intended to address safety concerns related to cargo loading systems, we find that the commenter's recommendation represents a sound precaution that operators may want to consider when accomplishing the actions required by this AD. Therefore, we have added Note 2 to this final rule (and renumbered a subsequent note accordingly) to state that operators may want to deactivate any installed cargo handling system before undertaking the actions required by paragraph (a) of this AD.

Extend Compliance Time

One commenter, the airplane manufacturer, requests that we extend the proposed compliance time from 18 months to 36 months. The commenter states that a 36-month compliance time would allow operators to accomplish the necessary actions at a regularly scheduled maintenance interval. The commenter justifies its request by stating that, in the unlikely event an off-wing escape slide fails to automatically inflate, the escape slide can still be inflated using the manual inflation handle. Thus, the escape slide would still be available if needed for an emergency evacuation. The FAA acknowledges that the manual inflation handle provides a reduction of risk. Therefore, we concur that the compliance time for paragraph (a) of this AD may be extended to 36 months and yet still maintain an adequate level of safety in the fleet. We have revised paragraph (a) of this final rule accordingly.

Revise Cost Impact Estimate

One commenter disagrees with our estimate of the cost impact of the proposed AD. The commenter notes that the estimate only considers direct labor costs for removal and reinstallation of the valves and does not assess the costs that operators may incur for replacement or modification of the valves. The commenter states that, while the parts manufacturer has been exchanging the subject valves at no cost to operators, once the exchange program ends, operators will be charged for valve modification or exchange.

We infer that the commenter is requesting that we revise the cost estimate in this final rule to include an estimate of the cost of required parts if the parts are not covered by the parts manufacturer's exchange program. We concur. If an operator must purchase a replacement valve, we estimate that it will cost $15,000. We have revised the Cost Impact section of this final rule accordingly. We also have included a statement that the ''parts manufacturer may cover the cost of replacement parts associated with this AD, subject to the conditions of its exchange program,'' and, thus, the costs attributable to this AD may be less than stated.

Conclusion

After careful review of the available data, including the comments noted above, we have determined that air safety and the public interest require the adoption of the rule with the changes previously described. We have determined that these changes will neither increase the economic burden on any operator nor increase the scope of the AD.

Cost Impact

There are approximately 435 Model 757–200, –200CB, and –300 series airplanes of the affected design in the worldwide fleet. We estimate that 360 airplanes of U.S. registry will be affected by this AD, that it will take approximately 1 work hour per airplane to accomplish the required inspection, and that the average labor rate is $60 per work hour. Based on these figures, the cost impact of the inspection required by this AD on U.S. operators is estimated to be $21,600, or $60 per airplane.

Should an operator be required to accomplish the replacement of the valve and placard, it will take approximately 2 work hours per airplane to accomplish, at an average labor rate of $60 per work hour. Required parts will cost approximately $15,000. Based on these figures, the cost impact of the replacement is estimated to be $15,120 per airplane. The parts manufacturer may cover the cost of replacement parts associated with this AD, subject to the conditions of its exchange program. As a result, the costs attributable to this AD may be less than stated above.

The cost impact figures discussed above are based on assumptions that no operator has yet accomplished any of the requirements of this AD action, and that no operator would accomplish those actions in the future if this AD were not adopted. The cost impact figures discussed in AD rulemaking actions represent only the time necessary to perform the specific actions actually required by the AD. These figures typically do not include incidental costs, such as the time required to gain access and close up, planning time, or time necessitated by other administrative actions.

Regulatory Impact

The regulations adopted herein will not have a substantial direct effect on the States, on the relationship between the national Government and the States, or on the distribution of power and responsibilities among the various levels of government. Therefore, it is determined that this final rule does not have federalism implications under Executive Order 13132.

For the reasons discussed above, I certify that this action (1) is not a ''significant regulatory action'' under Executive Order 12866; (2) is not a ''significant rule'' under DOT Regulatory Policies and Procedures (44 FR 11034, February 26, 1979); and (3)

will not have a significant economic impact, positive or negative, on a substantial number of small entities under the criteria of the Regulatory Flexibility Act. A final evaluation has been prepared for this action and it is contained in the Rules Docket. A copy of it may be obtained from the Rules Docket at the location provided under the caption **ADDRESSES**.

List of Subjects in 14 CFR Part 39

Air transportation, Aircraft, Aviation safety, Incorporation by reference, Safety.

Adoption of the Amendment

Accordingly, pursuant to the authority delegated to me by the Administrator, the Federal Aviation Administration amends part 39 of the Federal Aviation Regulations (14 CFR part 39) as follows:

PART 39—AIRWORTHINESS DIRECTIVES

1. The authority citation for part 39 continues to read as follows:

Authority: 49 U.S.C. 106(g), 40113, 44701.

§ 39.13 [Amended]

2. Section 39.13 is amended by adding the following new airworthiness directive:

2002–21–14 Boeing: Amendment 39–12921. Docket 2000–NM–392–AD.

Applicability: Model 757–200, –200CB, and –300 series airplanes; line numbers 001 through 905 inclusive; equipped with an off-wing escape slide system; certificated in any category.

Note 1: This AD applies to each airplane identified in the preceding applicability provision, regardless of whether it has been modified, altered, or repaired in the area subject to the requirements of this AD. For airplanes that have been modified, altered, or repaired so that the performance of the requirements of this AD is affected, the owner/operator must request approval for an alternative method of compliance in accordance with paragraph (c) of this AD. The request should include an assessment of the effect of the modification, alteration, or repair on the unsafe condition addressed by this AD; and, if the unsafe condition has not been eliminated, the request should include specific proposed actions to address it.

Compliance: Required as indicated, unless accomplished previously.

To prevent failure of an escape slide to deploy or inflate correctly, which could cause the slide to be unusable during an emergency evacuation and result in consequent injury to passengers or crewmembers, accomplish the following:

Inspection/Corrective Action

(a) Within 36 months after the effective date of this AD: Determine the part numbers (P/N) of the master control valve installed on each of the two pressure bottles located in the forward end of the aft cargo compartment that activate the off-wing escape slides, per Boeing Special Attention Service Bulletin 757–25–0214 (for Model 757–200 and 200CB series airplanes), or 757–25–0216 (for Model 757–300 series airplanes), both dated April 6, 2000, as applicable.

Note 2: To reduce the risk of accidental injury to maintenance personnel, operators may want to deactivate any installed cargo handling system before undertaking the actions required by paragraph (a) of this AD.

(1) If any P/N found on any valve is Boeing P/N S416N207–6 (Pacific Scientific P/N 42000802–1), before further flight, replace the affected valve with a new valve or rework the valve, as applicable; and replace the placard on the corresponding pressure bottle assembly with a new placard, per the applicable service bulletin.

(2) If the P/N shown on both valves is not Boeing P/N S416N207–6 (Pacific Scientific P/N 42000802–1), no further action is required by this paragraph.

Spares

(b) As of the effective date of this AD, no person shall install a master control valve, Boeing P/N S416N207–6 (Pacific Scientific P/N 42000802–1), on any airplane.

Alternative Methods of Compliance

(c) An alternative method of compliance or adjustment of the compliance time that provides an acceptable level of safety may be used if approved by the Manager, Seattle Aircraft Certification Office (ACO). Operators shall submit their requests through an appropriate FAA Principal Maintenance Inspector, who may add comments and then send it to the Manager, Seattle ACO.

Note 3: Information concerning the existence of approved alternative methods of compliance with this AD, if any, may be obtained from the Seattle ACO.

Special Flight Permits

(d) Special flight permits may be issued in accordance with sections 21.197 and 21.199 of the Federal Aviation Regulations (14 CFR 21.197 and 21.199) to operate the airplane to a location where the requirements of this AD can be accomplished.

Incorporation by Reference

(e) The actions shall be done in accordance with Boeing Special Attention Service Bulletin 757–25–0214, dated April 6, 2000; or Boeing Special Attention Service Bulletin 757–25–0216, dated April 6, 2000; as applicable. This incorporation by reference was approved by the Director of the Federal Register in accordance with 5 U.S.C. 552(a) and 1 CFR part 51. Copies may be obtained from Boeing Commercial Airplane Group, P.O. Box 3707, Seattle, Washington 98124–2207. Copies may be inspected at the FAA, Transport Airplane Directorate, 1601 Lind Avenue, SW., Renton, Washington; or at the Office of the Federal Register, 800 North Capitol Street, NW., suite 700, Washington, DC.

Effective Date

(f) This amendment becomes effective on November 29, 2002.

Issued in Renton, Washington, on October 16, 2002.

Michael Kaszycki,

Acting Manager, Transport Airplane Directorate, Aircraft Certification Service.

[FR Doc. 02–27080 Filed 10–24–02; 8:45 am]

BILLING CODE 4910–13–P

DEPARTMENT OF TRANSPORTATION

Federal Aviation Administration

14 CFR Part 39

[Docket No. 2002–NE–11–AD; Amendment 39–12924; AD 2002–21–17]

RIN 2120–AA64

Airworthiness Directives; Pratt & Whitney JT8D–200 Series Turbofan Engines

AGENCY: Federal Aviation Administration, DOT.

ACTION: Final rule.

SUMMARY: This amendment adopts a new airworthiness directive (AD) that is applicable to certain Pratt & Whitney (PW) JT8D–200 series turbofan engines. This amendment requires the installation of stops on the fan exit guide vane case. This amendment is prompted by reports of the flange between the fan duct case and the fan exit guide vane case separating due to a fan blade fracture event. The actions specified by this AD are intended to prevent the flange between the fan duct case and the fan exit guide vane case from separating due to a fan blade failure. Separations of that flange could result in damage to the airplane.

DATES: Effective November 29, 2002. The incorporation by reference of certain publications listed in the regulations is approved by the Director of the Federal Register as of November 29, 2002.

ADDRESSES: The service information referenced in this AD may be obtained from Pratt & Whitney, 400 Main St., East Hartford, CT 06108; telephone (860) 565–6600; fax (860) 565–4503. This information may be examined, by appointment, at the Federal Aviation Administration (FAA), New England Region, Office of the Regional Counsel, 12 New England Executive Park, Burlington, MA; or at the Office of the Federal Register, 800 North Capitol Street, NW., Suite 700, Washington, DC.

FOR FURTHER INFORMATION CONTACT: Christopher Spinney, Aerospace Engineer, Engine Certification Office, FAA, Engine and Propeller Directorate, 12 New England Executive Park,

Burlington, MA 01803–5299; telephone (781) 238–7175; fax (781) 238–7199.

SUPPLEMENTARY INFORMATION: A proposal to amend part 39 of the Federal Aviation Regulations (14 CFR part 39) to include an AD that is applicable to Pratt & Whitney (PW) JT8D–200 series turbofan engines was published in the **Federal Register** on July 10, 2002 (67 FR 45680). That action proposed to require the installation of stops on the fan exit guide vane case in accordance with Pratt & Whitney (PW) service bulletin No. 6100, Revision 2, dated December 9, 1998.

Comments

Interested persons have been afforded an opportunity to participate in the making of this amendment. Due consideration has been given to the comments received.

Exemption of Stops for Improved Fan Blade Incorporations

One commenter states that the fan exit guide vane case stops should not be required for engines that incorporate the improved fan blades required by AD 99–10–11. The commenter states that the installation of the improved fan blades prevents fan blade failures which cause fan case failures; therefore, the stops should not be required once the improved fan blades are incorporated.

The FAA does not agree. It is true that the fan blade modification mandated by AD 99–10–11 greatly improves the durability of the fan blades. However, the modifications cannot guarantee that a fan blade will never be released for any cause. Further, airworthiness standards for engines require that the design and construction of engines be such that failure of the most critical fan blade does not lead to an unsafe condition. Separation of the fan exit guide vane case from the fan duct assembly can lead to a number of unsafe conditions that hazard the aircraft. The intent of this AD is to return the engine to the level of safety prescribed by the airworthiness standards in the Code of Federal Regulations.

Change Definition of Shop Visit

Two commenters state that the definition of shop visit should be changed to exclude line-maintenance type shop visits.

The FAA agrees. The shop visit definition has been changed in this final rule.

Increased Operational Costs

One commenter states that the installation of the stops will add additional weight that will increase the operational costs associated with increased annual fuel requirements and therefore this AD should not be issued.

The FAA does not agree. While the annual fuel burn requirements may increase due to additional weight, the FAA has determined that this potential cost increase is outweighed by the increase in safety that will result from the lower risk of aircraft damage after the installation of the stops.

Applicability Clarification

One commenter states that the applicability section needs clarification to indicate which case and duct part numbers the stops must be installed on.

The FAA agrees. The applicability has been changed to state the part numbers for the cases and the ducts that will require the installation of the stops in the AD.

Allow Additional Options for Rubber Strips

One commenter states that the AD should allow additional options for rubber strips on the forward ID of each stop to prevent vibration instead of using silicone and allow bolt hole clocking options for the stops. The commenter states that the silicone is cumbersome to apply and difficult to remove, and the clocking options are requested to prevent interference with brackets or case repairs.

The FAA does not agree. The FAA is not familiar with the details of the design changes being requested, however, we will evaluate them as an alternate method of compliance if submitted in accordance with paragraph (d) of this AD.

Previous SB Compliance To Constitute AD Compliance

One commenter requests that compliance with the previous SB's PW ASB 6100, Original and Revision 1, constitute compliance with the AD. Many of the commenter's engines have already complied to the earlier SB's.

The FAA agrees. Credit for compliance to earlier revisions of PW ASB 6100 has been added to this final rule.

Agreement With Proposal as Written

The National Transportation Safety Board agrees with the proposal as written.

After careful review of the available data, including the comments noted above, the FAA has determined that air safety and the public interest require the adoption of the rule with the changes described previously. The FAA has determined that these changes will neither increase the economic burden on any operator nor increase the scope of the AD.

Economic Analysis

There are approximately 1,346 PW JT8D–200 series engines of the affected design in the worldwide fleet. The FAA estimates that 821 engines installed on airplanes of U.S. registry would be affected by this AD. The FAA also estimates that it would take approximately 1.5 work hours per engine to perform the actions, and that the average labor rate is $60 per work hour. Required parts would cost approximately $5,200 per engine. Based on these figures, the total cost of the AD to U.S. operators is estimated to be $4,343,090.

Regulatory Analysis

This final rule does not have federalism implications, as defined in Executive Order 13132, because it would not have a substantial direct effect on the States, on the relationship between the national government and the States, or on the distribution of power and responsibilities among the various levels of government. Accordingly, the FAA has not consulted with state authorities prior to publication of this final rule.

For the reasons discussed above, I certify that this action (1) is not a ''significant regulatory action'' under Executive Order 12866; (2) is not a ''significant rule'' under the DOT Regulatory Policies and Procedures (44 FR 11034, February 26, 1979); and (3) will not have a significant economic impact, positive or negative, on a substantial number of small entities under the criteria of the Regulatory Flexibility Act. A final evaluation has been prepared for this action and it is contained in the Rules Docket. A copy of it may be obtained by contacting the Rules Docket at the location provided under the caption **ADDRESSES**.

List of Subjects in 14 CFR Part 39

Air transportation, Aircraft, Aviation safety, Incorporation by reference, Safety.

Adoption of the Amendment

Accordingly, pursuant to the authority delegated to me by the Administrator, the Federal Aviation Administration amends part 39 of the Federal Aviation Regulations (14 CFR part 39) as follows:

PART 39—AIRWORTHINESS DIRECTIVES

1. The authority citation for part 39 continues to read as follows:

Authority: 49 U.S.C. 106(g), 40113, 44701.

§ 39.13 [Amended]

2. Section 39.13 is amended by adding a new airworthiness directive to read as follows:

2002–21–17 Pratt & Whitney: Amendment 39–12924. Docket No. 2002–NE–11–AD.

Applicability: This airworthiness directive (AD) is applicable to Pratt & Whitney (PW) JT8D–209, –217, –217A, –217C, and –219 series turbofan engines that do not incorporate the fan exit guide vane case, part number (P/N) 805919 or 815377, and the improved durability and impact resistant fan duct assembly, P/N 805918–01. These engines are installed on, but not limited to McDonnell Douglas MD–80 and series airplanes.

Note 1: This AD applies to each engine identified in the preceding applicability provision, regardless of whether it has been modified, altered, or repaired in the area subject to the requirements of this AD. For engines that have been modified, altered, or repaired so that the performance of the requirements of this AD is affected, the owner/operator must request approval for an alternative method of compliance in accordance with paragraph (d) of this AD. The request should include an assessment of the effect of the modification, alteration, or repair on the unsafe condition addressed by this AD; and, if the unsafe condition has not been eliminated, the request should include specific proposed actions to address it.

Compliance: Compliance with this AD is required as indicated, unless already done.

To prevent the flange between the fan duct and the fan exit guide vane from separating due to a fan blade failure, which could result in damage to the airplane, do the following:

Installation of Hardware

(a) At the next shop visit after the effective date of this AD, install stops on the fan exit guide vane case in accordance with paragraphs 2.A. through 2.C.(1) of the Accomplishment Instructions of Pratt & Whitney (PW) service bulletin (SB) No. 6100, Revision 2, dated December 9, 1998.

(b) Engines that have had stops installed using PW SB No. 6100, Revision 1 dated April 9, 1992, or original issue dated November 9, 1992, are considered to be in compliance with paragraph (a) of this AD.

Definitions

(c) For the purposes of this AD, a shop visit is defined as an engine removal, where engine maintenance entails separation of pairs of major mating engine flanges or the removal of a disk, hub, or spool at a maintenance facility regardless of other planned maintenance except as follows:

(1) Engine removal for the purpose of performing field maintenance type activities at a maintenance facility in lieu of performing them on-wing is not a shop visit.

(2) Separation of flanges of the combustion chamber and turbine fan duct assembly (split flanges) for the purpose of accessing non-rotating accessory hardware is not a shop visit.

(3) Separation of flanges for the purpose of shipment without subsequent internal maintenance is not a shop visit.

Alternative Methods of Compliance

(d) An alternative method of compliance or adjustment of the compliance time that provides an acceptable level of safety may be used if approved by the Manager, Engine Certification Office (ECO). Operators must submit their request through an appropriate FAA Principal Maintenance Inspector, who may add comments and then send it to the Manager, ECO.

Note 2: Information concerning the existence of approved alternative methods of compliance with this airworthiness directive, if any, may be obtained from the ECO.

Special Flight Permits

(e) Special flight permits may be issued in accordance with §§ 21.197 and 21.199 of the Federal Aviation Regulations (14 CFR 21.197 and 21.199) to operate the aircraft to a location where the requirements of this AD can be done.

Documents That Have Been Incorporated By Reference

(f) The installations must be done in accordance with Pratt & Whitney (PW) Service Bulletin No. 6100, Revision 2, dated December 9, 1998. This incorporation by reference was approved by the Director of the Federal Register in accordance with 5 U.S.C. 552(a) and 1 CFR part 51. Copies may be obtained from Pratt & Whitney, 400 Main St., East Hartford, CT 06108; telephone (860) 565–6600, fax (860) 565–4503. Copies may be inspected at the FAA, New England Region, Office of the Regional Counsel, 12 New England Executive Park, Burlington, MA; or at the Office of the Federal Register, 800 North Capitol Street, NW., Suite 700, Washington, DC.

Effective Date

(g) This amendment becomes effective on November 29, 2002.

Issued in Burlington, Massachusetts, on October 18, 2002.

Jay J. Pardee,

Manager, Engine and Propeller Directorate, Aircraft Certification Service.

[FR Doc. 02–27183 Filed 10–24–02; 8:45 am]

BILLING CODE 4910–13–P

DEPARTMENT OF TRANSPORTATION

Federal Aviation Administration

14 CFR Part 71

[Airspace Docket No. 02–ASO–18]

Amendment of Class D Airspace; Titusville, FL

AGENCY: Federal Aviation Administration (FAA), DOT.

ACTION: Final rule.

SUMMARY: This action amends Class D airspace at Titusville, FL. Daytona Beach Approach Control is the controlling air traffic control facility for Instrument Flight Rules (IFR) operations at Spacecoast Regional Airport, FL. Due to the high volume of Visual Flight Rules (VFR) traffic overflying the Spacecoast Regional Airport at low altitudes, Daytona Beach Approach Control has requested the Titusville, FL Class D airspace be lowered from 2,500 feet MSL to 1,900 feet MSL.

EFFECTIVE DATE: 0901 UTC, January 23, 2003.

FOR FURTHER INFORMATION CONTACT: Walter R. Cochran, Manager, Airspace Branch, Air Traffic Division, Federal Aviation Administration, P.O. Box 20636, Atlanta, Georgia 30320; telephone (404) 305–5586.

SUPPLEMENTARY INFORMATION:

History

On August 27, 2002, the FAA proposed to amend part 71 of the Federal Aviation Regulations (14 CFR part 71) by amending Class D airspace at Titusville, FL, (67 FR 54976). Class D airspace designations for airspace areas extending upward from the surface of the earth are published in Paragraph 5000 of FAA Order 7400.9K, dated August 30, 2002, and effective September 16, 2002, which is incorporated by reference in 14 CFR 71.1. The Class D airspace designations listed in this document will be published subsequently in the Order.

Interested parties were invited to participate in this rulemaking proceeding by submitting written comments on the proposal to the FAA. No comments objecting to the proposal were received.

The Rule

This amendment to part 71 of the Federal Aviation Regulations (14 CFR Part 71) amends Class D airspace at Titusville, FL.

The FAA has determined that this regulation only involves an established body of technical regulations for which frequent and routine amendments are necessary to keep them operationally current. It, therefore, (1) is not a ''significant regulatory action'' under Executive Order 12866; (2) is not a ''significant rule'' under DOT Regulatory Policies and Procedures (44 FR 11034; February 26, 1979); and (3) does not warrant preparation of a regulatory evaluation as the anticipated impact is so minimal. Since this is a routine matter that will only affect air traffic procedures and air navigation, it is certified that this rule will not have a significant economic impact on a substantial number of small entities

under the criteria of the Regulatory Flexibility Act.

List of Subjects in 14 CFR Part 71

Airspace, Incorporation by reference, Navigation (air).

Adoption of the Amendment

In consideration of the foregoing, the Federal Aviation Administration amends 14 CFR Part 71 as follows:

PART 71—DESIGNATION OF CLASS A, CLASS B, CLASS C, CLASS D AND CLASS E AIRSPACE AREAS; AIRWAYS; ROUTES; AND REPORTING POINTS

1. The authority citation for 14 CFR Part 71 continues to read as follows:

Authority: 49 U.S.C. 106(g); 40103, 40113, 40120, EO 10854, 24 FR 9565, 3 CFR, 1959–1963 Comp., p. 389; 14 CFR 11.69.

§ 71.1 [Amended]

2. The incorporation by reference in 14 CFR 71.1 of Federal Aviation Administration Order 7400.9K, Airspace Designations and Reporting Points, dated August 30, 2002, and effective September 16, 2002, is amended as follows:

Paragraph 5000 Class D Airspace.

* * * * *

ASO FL D Titusville, FL [Revised]

Spacecoast Regional Airport, FL
(Lat. 28°30′53″ N, long. 80°47′57″ W.)

That airspace extending upward from the surface to and including 1,900 feet MSL within a 4-mile radius of Space Coast Regional Airport; excluding the portion within Restricted area R–2934 when it is effective. This Class D airspace area is effective during the specific days and times established in advance by a Notice to Airmen. The effective days and times will thereafter be continuously published in the Airport/Facility Directory.

* * * * *

Issued in College Park, Georgia, on October 17, 2002.

Walter R. Cochran,

Acting Manager, Air Traffic Division, Southern Region.

[FR Doc. 02–27172 Filed 10–24–02; 8:45 am]

BILLING CODE 4910–13–M

DEPARTMENT OF TRANSPORTATION

Federal Aviation Administration

14 CFR Part 71

[Airspace Docket No. 02–ACE–7]

Modification of Class D Airspace; Knob Noster, Whiteman AFB, MO; Modification of Class E Airspace; Knob Noster, Whiteman AFB, MO

AGENCY: Federal Aviation Administration (FAA), DOT.

ACTION: Final rule.

SUMMARY: This action modifies Class D airspace at Knob Noster, Whiteman AFB, MO, modifies Class E airspace designated as a surface area for Knob Noster, Whiteman AFB, MO and modifies Class E airspace extending upward from 700 feet above the surface of the earth at Knob Noster, Whiteman AFB, MO. Modifications to the Knob Noster, Whiteman AFB, MO Class D airspace and the Knob Noster, Whiteman AFB, MO Class E airspace designated as a surface area are required in order to provide adequate controlled airspace for circling requirements of Category E aircraft executing instrument flight procedures. The extension of the Knob Noster, Whiteman AFB, MO Class E airspace extending upward from 700 feet above the surface of the earth is no longer required. This action modifies Class D airspace, Class E airspace designated as a surface area and Class E airspace extending upward from 700 feet above the surface of the earth at Knob Noster, Whiteman AFB, MO.

EFFECTIVE DATE: 0902 UTC, December 26, 2002.

FOR FURTHER INFORMATION CONTACT: Brenda Mumper, Air Traffic Division, Airspace Branch, ACE–520A, DOT Regional Headquarters Building, Federal Aviation Administration, 901 Locust, Kansas City, MO 64106; telephone: (816) 329–2524.

SUPPLEMENTARY INFORMATION:

History

On Wednesday, August 28, 2002, the FAA proposed to amend 14 CFR part 71 to modify Class D and Class E airspace at Knob Noster, Whiteman AFB, MO (67 FR 21136). The proposal was to modify Class D airspace and Class E airspace designated as a surface area to contain instrument approach procedures and to eliminate the extension to Class E airspace extending upward from 700 feet above the surface of the earth. Interested parties were invited to participate in this rulemaking proceeding by submitting written comments on the proposal to the FAA. No comments objecting to the proposal were received. Class D airspace designations are published in paragraph 5000, Class E airspace areas extending upward from the surface of the earth in paragraph 6002, and Class E airspace areas extending upward from 700 feet or more above the surface of the earth in paragraph 6005, of FAA Order 7400.9K, dated August 30, 2002, and effective September 16, 2002, which is incorporated by reference in 14 CFR 71.1. The Class D and E airspace designations listed in this document would be published subsequently in the Order.

The Rule

This amendment to Part 71 of the Federal Aviation Regulations (14 CFR Part 71) modifies Class D and Class E airspace at Knob Noster, Whiteman AFB, MO to provide adequate controlled airspace for aircraft executing instrument flight procedures. It also removes from Class E airspace designation airspace no longer required to be identified as controlled airspace. The areas will be depicted on appropriate aeronautical charts.

The FAA has determined that this regulation only involves an established body of technical regulations for which frequent and routine amendments are necessary to keep them operationally current. Therefore, this regulation—(1) is not a ''significant regulatory action'' under Executive Order 12866; (2) is not a ''significant rule'' under DOT Regulatory Policies and Procedures (44 FR 11034; February 26, 1979); and (3) does not warrant preparation of a Regulatory Evaluation as the anticipated impact is so minimal. Since this is a routine matter that will only affect air traffic procedures and air navigation, it is certified that this rule, when promulgated, will not have a significant economic impact on a substantial number of small entities under the criteria of the Regulatory Flexibility Act.

List of Subjects in 14 CFR Part 71

Airspace, Incorporation by reference, Navigation (Air).

Adoption of the Amendment

In consideration of the foregoing, the Federal Aviation Administration amends 14 CFR part 71 as follows:

PART 71—DESIGNATION OF CLASS A, CLASS B, CLASS C, CLASS D, AND CLASS E AIRSPACE AREAS; AIRWAYS; ROUTES; AND REPORTING POINTS

1. The authority citation for part 71 continues to read as follows:

Authority: 49 U.S.C. 106(g); 40103, 40113, 40120; E.O. 10854, 24 FR 9565, 3 CFR, 1959–1963 Comp., p. 389.

§ 71.1 [Amended]

2. The incorporation by reference in 14 CFR 71.1 of Federal Aviation Administration Order 7400.9K, Airspace Designations and Reporting Points, dated August 30, 2002, and effective September 16, 2002, is amended as follows:

Paragraph 5000 Class D Airspace.

* * * * *

ACE MO D Knob Noster, MO

Whiteman AFB, MO
(Lat. 38°43′49″ N., long. 93°32′53″ W.)

That airspace extending upward from the surface to and including 3,400 feet MSL and within a 6.5-mile radius of Whiteman AFB. This Class D airspace area is effective during the specific dates and times established in advance by a Notice to Airmen. The effective date and time will thereafter be continuously published in the Airport/Facility Directory

* * * * *

Paragraph 6002 Class E airspace areas designated as a surface area for an airport.

* * * * *

ACE MO E2 Knob Noster, MO

Whiteman AFB, MO
(Lat. 38°43′49″ N., long. 93°32′53″ W.)

That airspace extending upward from the surface within a 6.5-mile radius of Whiteman AFB. This Class E airspace area is effective during the specific dates and times established in advance by a Notice to Airmen. The effective date and time will thereafter be continuously published in the Airport/Facility Directory.

* * * * *

Paragraph 6005 Class E airspace areas extending upward from 700 feet or more above the surface of the earth.

* * * * *

ACE MO E5 Knob Noster, MO

Whiteman AFB, MO
(Lat. 38°43′49″ N., long. 93°32′53″ W.)

That airspace extending upward from 700 feet above the surface of the earth within a 7-mile radius of Whiteman AFB.

* * * * *

Issued in Kansas City, MO, on October 9, 2002.

Herman J. Lyons, Jr.

Manager, Air Traffic Division, Central Region.

[FR Doc. 02–27176 Filed 10–24–02; 8:45 am]

BILLING CODE 4910–13–M

DEPARTMENT OF TRANSPORTATION

Federal Aviation Administration

14 CFR Part 71

[Airspace Docket No. 02–ACE–9]

Amendment to Class E Airspace; Gordon, NE

AGENCY: Federal Aviation Administration (FAA), DOT.

ACTION: Direct final rule; confirmation of effective date.

SUMMARY: This document confirms the effective date of a direct final rule which revises Class E airspace at Gordon, NE.

EFFECTIVE DATE: 0901 UTC, November 28, 2002.

FOR FURTHER INFORMATION CONTACT: Brenda Mumper, Air Traffic Division, Airspace Branch, ACE–520A, DOT Regional Headquarters Building, Federal Aviation Administration, 901 Locust, Kansas City, MO 64106; telephone: (816) 329–2524.

SUPPLEMENTARY INFORMATION: The FAA published this direct final rule with a request for comments in the **Federal Register** on August 20, 2002 (67 FR 53877). The FAA uses the direct final rulemaking procedure for a non-controversial rule where the FAA believes that there will be no adverse public comment. This direct final rule advised the public that no adverse comments wee anticipated, and that unless a written adverse comment, or a written notice of intent to submit such an adverse comment, were received within the comment period, the regulation would become effective on November 28, 2002. No adverse comments were received, and thus this notice confirms that this direct final rule will become effective on that date.

Issued in Kansas City, MO on October 2, 2002.

Herman J. Lyons, Jr.,

Manager, Air Traffic Division, Central Region.

[FR Doc. 02–27179 Filed 10–24–02; 8:45 am]

BILLING CODE 4910–13–M

DEPARTMENT OF TRANSPORTATION

Federal Aviation Administration

14 CFR Part 71

[Airspace Docket No. 02–ASO–14]

Establishment of Class E5 Airspace; Spruce Pine, NC

AGENCY: Federal Aviation Administration (FAA), DOT.

ACTION: Final rule.

SUMMARY: This action establishes Class E5 airspace at Spruce Pine, NC. An Area Navigation (RNAV) Global Positioning System (GPS) Standard Instrument Approach Procedure (SIAP), helicopter point in space approach, has been developed for Avery County Airport. As a result, controlled airspace extending upward from 700 feet Above Ground Level (AGL) is needed to contain the SIAP.

EFFECTIVE DATE: 0901 UTC, January 23, 2003.

FOR FURTHER INFORMATION CONTACT: Walter R. Cochran, Manager, Airspace Branch, Air Traffic Division, Federal Aviation Administration, P.O. Box 20636, Atlanta, Georgia 30320; telephone (404) 305–5627.

SUPPLEMENTARY INFORMATION:

History

On August 20, 2002, the FAA proposed to amend part 71 of the Federal Aviation Regulations (14 CFR part 71) by establishing Class E5 airspace at Spruce Pine, NC, (67 FR 53895). This action provides adequate Class E5 airspace for IFR operations at Avery County Airport, Spruce Pine, NC. Designations for Class E airspace extending upward from 700 feet or more above the surface are published in FAA Order 7400.9K, dated August 30, 2002, and effective September 16, 2002, which is incorporated by reference in 14 CFR part 71.1. The Class E designation listed in this document will be published subsequently in the Order.

Interested parties were invited to participate in this rulemaking proceeding by submitting written comments on the proposal to the FAA. No comments objecting to the proposal were received.

The Rule

This amendment to part 71 of the Federal Aviation Regulations (14 CFR part 71) establishes Class E5 airspace at Spruce Pine, NC.

The FAA has determined that this regulation only involves an established body of technical regulations for which frequent and routine amendments are necessary to keep them operationally current. It, therefore, (1) is not a ''significant regulatory action'' under Executive Order 12866; (2) is not a ''significant rule'' under DOT Regulatory Policies and Procedures (44 FR 11034; February 26, 1979); and (3) does not warrant preparation of a Regulatory Evaluation, as the anticipated impact is so minimal. Since this is a routine matter that will only affect air traffic procedures and air navigation, it is certified that this rule

will not have a significant economic impact on a substantial number of small entities under the criteria of the Regulatory Flexibility Act.

List of Subjects in 14 CFR Part 71

Airspace, Incorporation by reference, Navigation (air).

Adoption of the Amendment

In consideration of the foregoing, the Federal Aviation Administration amends 14 CFR part 71 as follows:

PART 71—DESIGNATION OF CLASS A, CLASS B, CLASS C, CLASS D AND CLASS E AIRSPACE AREAS; AIRWAYS; ROUTES; AND REPORTING POINTS

1. The authority citation for 14 CFR part 71 continues to read as follows:

Authority: 49 U.S.C. 106(g), 40103, 40113, 40120; EO 10854, 24 FR 9565, 3 CFR, 1959–1963 Comp., p. 389.

§ 71.1 [Amended]

2. The incorporation by reference in 14 CFR 71.1 of Federal Aviation Administration Order 7400.9K, Airspace Designations and Reporting Points, dated August 30, 2002, and effective September 16, 2002, is amended as follows:

Paragraph 6005 Class E Airspace Areas Extending Upward From 700 Feet or More Above the Surface of the Earth.

* * * * *

ASO NC E5 Spruce Pine, NC [New]

Avery County Airport, NC

Point In Space Coordinates
(Lat 35°55′52″N, long. 82°00′43″W.)

That airspace extending upward from 700 feet or more above the surface within a 6-mile radius of the point in space (lat. 35°55′52″N, long. 82°00′43″W) serving Avery County Airport.

* * * * *

Issued in College Park, Georgia, on October 17, 2002.

Walter R. Cochran,

Acting Manager, Air Traffic Division, Southern Region.

[FR Doc. 02–27173 Filed 10–24–02; 8:45 am]

BILLING CODE 4910–13–M

POSTAL SERVICE

39 CFR Part 111

Simplified Address Format for Letter-Size and Flat-Size Standard Mail and Periodicals

AGENCY: Postal Service.

ACTION: Final rule.

SUMMARY: This final rule amends some of the standards and identification procedures for Standard Mail and Periodicals letter-size and flat-size mail using the simplified address format as provided in *Domestic Mail Manual* (DMM) A040. The new requirements will improve the processing and distribution of such mail and will also clarify and expand the standards for identifying this mail that does not bear a specific delivery address.

EFFECTIVE DATE: January 1, 2003.

FOR FURTHER INFORMATION CONTACT: O.B. Akinwole, (703) 292–3643.

SUPPLEMENTARY INFORMATION: On August 22, 2002, the Postal Service published for public comment in the **Federal Register** a proposed rule (FR 67 54397–54399) that expanded provisions for mailers using the simplified address format. The Postal Service also invited comments on the proposed rule from interested parties and accepted comments until September 23, 2002. No comments were received during the comment period. This final rule contains the DMM standards adopted by the Postal Service after the comment period ended.

Some mailers elect to use the simplified form of address for their mass mailings. Simplified address is an alternate-addressing format that allows mailers to prepare mailpieces without using individual names and addresses within very specific requirements. Instead of using individual addresses, the mailpieces are simply addressed as ''Postal Customer'' (or a similar designation as permitted). Eligibility to use the simplified address format is determined by the type of route selected for distribution, and in some instances by the type of mailer, as follows:

- Rural Routes, Highway Contract Routes, and Post Office Boxes. Any mailer may use simplified address format for the distribution of mail to rural routes, highway contract routes, and Post Office boxes at offices without city carrier service. Distribution of such mail is made to each boxholder on a rural route or highway contract route, each family on a rural route or highway contract route (at any Post Office), or all Post Office boxholders at a Post Office without city carrier service.
- City Routes and Post Office Boxes. Only certain authorized governmental entities may use the simplified address format for the distribution of mail to city routes or to Post Office boxes at Post Offices with city carrier service. Authorized governmental entities include U. S. Congress and Federal Government agencies or state, county, or municipal governments, and the governments of the District of Colombia, the Commonwealth of Puerto Rico, and any U.S. territory or possession listed in *Domestic Mail Manual* (DMM) G010. Distribution of such mail must be made to each stop or possible delivery on city carrier routes, or to each Post Office box at Post Offices with city carrier service.

Domestic Mail Manual (DMM) A040 is revised to clarify the preparation requirements for letters and flats that use the simplified address format. Additionally, all congressional mailings using the simplified address format will use PS Tag 11, Congressional Mail, ''Postmaster—Open and Distribute'' on all containers to ensure appropriate handling through downstream postal processes. This tag, which will help identify congressional mail as it moves through the mailstream, will be firmly attached to the mailing container.

This revision is a result of recommendations and suggestions from mailers and Postal Service personnel and will ensure that customer expectations for accurate processing and timely delivery are met. This will be achieved by clarifying and reinforcing procedures that will increase the identification of containers used in preparation of this type of mail. The Postal Service and mailers who use this mail format believe that clarifying and reinforcing the preparation and container labeling requirements will enable more accurate processing of the mail. It will also help maintain the integrity of mail using the simplified address format and prevent potential service breakdowns that may occur when such mail is inadvertently separated from the container identifying its destination as a result of inadequate preparation and container labeling. These discrepancies can cause unnecessary delays during postal handling and may increase postal processing costs.

The *Domestic Mail Manual* is revised as follows. These changes are incorporated by reference in the *Code of Federal Regulations.* See CFR part 111.

List of Subjects in 39 CFR Part 111

Administrative practice and procedure, Postal Service.

PART 111—[AMENDED]

1. The authority citation for 39 CFR part 111 continues to read as follows:

Authority: 5 U.S.C. 5552(a); 39 U.S.C. 101, 401, 403, 404, 414, 3001–3011, 3201–3219, 3403–3406, 3621, 3626, 5001.

2. Amend *Domestic Mail Manual* A040, E200, and M200 as follows:

Domestic Mail Manual (DMM)

A Addressing

A000 Basic Addressing

* * * * *

A040 Alternative Addressing Formats

1.0 SIMPLIFIED ADDRESS

* * * * *

1.2 Use—City Routes, P.O. Boxholders

[Revise 1.2 by deleting the last sentence in the first paragraph and replacing it with the following sentence:]

* * * The following also applies:

* * *

* * * * *

1.3 Mail Preparation

[Revise 1.3 as follows:]

All pieces must be prepared in carrier route or 5-digit carrier route or carrier routes containers; 3-digit carrier route or carrier routes containers are not allowed. All flat-size pieces must be prepared in carrier route or 5-digit carrier sacks. All pieces for the same carrier route must be tied in packages of 50, so far as practicable, and each package must bear a facing slip showing desired distribution (*e.g.*, 5-digit ZIP Code and route number). If the pieces are tied in quantities other than 50 each, the actual number must be shown on the facing slip. Delivery statistics for routes may be obtained as described in A930. Pieces in such mailings must also meet the following standards:

a. All pieces must be in the same processing category.

b. Pieces must be marked according to M012.

c. Letter-size pieces must be prepared in trays, and flat-size pieces must be prepared in sacks under M220 or M620, as applicable.

d. If selective distribution is desired, enough pieces must be presented to cover the route or routes selected.

[Delete 1.4. Redesignate 1.5, 1.6, and 1.7 as 1.4, 1.5 and 1.6, respectively.]

* * * * *

4.0 CONGRESSIONAL FRANK

* * * * *

[Redesignate current 4.3 and 4.4 as 4.4 and 4.5, and add new 4.3 to read as follows:]

4.3 Mail Preparation

Mailers must prepare containers of mail using the simplified address format in the manner listed below:

a. Containers of congressional frank mailpieces using the simplified address format must be prepared under A040.

b. PS Tag 11, *Congressional Mail*, ''Postmaster—Open and Distribute'' must be securely affixed to each sack or tray of congressional mail to ensure adequate identification of the mail. On trays, the tag must be affixed to the end that bears the tray label.

[Redesignate current 4.3 and 4.4 as 4.4 and 4.5, and add new 4.3 to read as follows:]

* * * * *

E Eligibility

* * * * *

E200 Periodicals

E230 Carrier Route Rates

* * * * *

3.0 WALK-SEQUENCE DISCOUNTS

* * * * *

3.3 Addressing Standards

[Revise 3.3b as follows:]

b. Official matter, whether mailed under congressional frank or by certain government entities for delivery on a city route, may use the appropriate simplified address format described in A040.

* * * * *

M Mail Preparation and Sortation

* * * * *

M200 Periodicals (Nonautomation)

* * * * *

M220 Carrier Route Rates

1.0 BASIC INFORMATION

1.1 General Preparation Standards

[Add new item h to read as follows:]

* * * h. Pieces with a simplified address must meet the corresponding preparation standards in A040 and the eligibility standards in E215.

* * * * *

[Revise the heading of 3.0 to read as follows:]

3.0 PREPARATION (LETTER-SIZE PIECES)

[Designate 3.0 as 3.1 and add new 3.2 to read as follows:]

3.2 Tray Line 2 for Pieces with Simplified Address

For trays that contain letter-size pieces with a simplified address prepared under A040, use ''MAN'' on Line 2 in place of ''BC.''

* * * * *

[An appropriate amendment to 39 CFR part 111 will be published to reflect these changes.]

Stanley F. Mires,

Chief Counsel, Legislative.

[FR Doc. 02–27233 Filed 10–24–02; 8:45 am]

BILLING CODE 7710–12–P

ENVIRONMENTAL PROTECTION AGENCY

40 CFR Part 52

[CA 247–0364a; FRL–7396–1]

Revision to the California State Implementation Plan, Ventura County Air Pollution Control District

AGENCY: Environmental Protection Agency (EPA).

ACTION: Direct final rule.

SUMMARY: EPA is taking direct final action to approve a revision to the Ventura County Air Pollution Control District (VCAPCD) portion of the California State Implementation Plan (SIP). This revision concerns emissions of oxides of nitrogen (NOX) and carbon monoxide (CO) from stationary internal combustion engines. In accordance with the Clean Air Act as amended in 1990 (CAA or the Act), we are taking action on a local rule that regulates these emission sources.

DATES: This rule is effective on December 24, 2002, without further notice, unless EPA receives adverse comments by November 25, 2002. If we receive such comments, we will publish a timely withdrawal in the **Federal Register** to notify the public that this rule will not take effect.

ADDRESSES: Mail comments to Andy Steckel, Rulemaking Office Chief (AIR–4), U.S. Environmental Protection Agency, Region IX, 75 Hawthorne Street, San Francisco, CA 94105.

You can inspect a copy of the submitted SIP revision and EPA's technical support document (TSD) at our Region IX office during normal business hours. You may also see a copy of the submitted SIP revision at the following locations:

Air and Radiation Docket and Information Center, U.S. Environmental Protection Agency, Room B–102, 1301 Constitution Avenue, NW., (Mail Code 6102T), Washington, DC 20460.

California Air Resources Board, Stationary Source Division, Rule Evaluation Section, 1001 ''I'' Street, Sacramento, CA 95814.

Ventura County Air Pollution Control District, 669 Country Square Drive, Ventura, CA 93003

A copy of the rule may also be available via the Internet at *http://www.arb.ca.gov/drdb/drdbltxt.htm.* This is not an EPA Web site and it may not contain the same version of the rule that was submitted to EPA. Readers should verify that the adoption date of the rule listed is the same as the rule submitted

to EPA for approval and be aware that the official submittal is only available at the agency addresses listed above.

FOR FURTHER INFORMATION CONTACT: Al Petersen, Rulemaking Office (AIR–4), U.S. Environmental Protection Agency, Region IX; (415) 947–4118.

SUPPLEMENTARY INFORMATION: Throughout this document, ''we,'' ''us'' and ''our'' refer to EPA.

Table of Contents

I. The State's Submittal
A. What rule did the State submit?
B. Are there other versions of this rule?
C. What is the purpose of the submitted rule revisions?
II. EPA's Evaluation and Action
A. How is EPA evaluating the rule?
B. Does the rule meet the evaluation criteria?
C. EPA recommendations to further improve the rule
D. Public comment and final action
III. Background Information
Why was this rule submitted?
IV. Administrative Requirements

I. The State's Submittal

A. What Rule Did the State Submit?

Table 1 lists the rule addressed by this proposal with the dates that it was revised by the local air agency and submitted to EPA by the California Air Resources Board (CARB).

TABLE 1.—SUBMITTED RULE

Local agency	Rule number	Rule title	Revised	Submitted
VCAPCD	74.9	Stationary Internal Combustion Engines	11/14/00	05/08/01

On July 20, 2001, this rule submittal was found to meet the completeness criteria in 40 CFR part 51, appendix V, which must be met before formal EPA review.

B. Are There Other Versions of This Rule?

The previous version of VCAPCD Rule 74.9 is SIP Rule 74.9, Stationary Internal Combustion Engines, approved into the SIP on August 23, 1995 (60 FR 43713).

C. What Is the Purpose of the Submitted Rule Revisions?

Rule 74.9 regulates NO_X and CO emissions from stationary internal combustion engines with a brake horsepower rating of 50 or greater located at a major stationary source. The SIP rule applies to such engines throughout VCAPCD, which includes the mainland severe ozone nonattainment area plus two Channel Islands designated unclassifiable. 40 CFR 81.305. The purpose of changing Rule 74.9 relative to the SIP Rule is to include an exemption to the rule for engines operated on the two Channel Islands, San Nicolas Island (SNI) and Anacapa Island (AI). The TSD has more information about this rule.

II. EPA's Evaluation and Action

A. How Is EPA Evaluating the Rule?

Generally, SIP rules must be enforceable (see section 110(a) of the CAA), must require Reasonably Available Control Technology (RACT) for major sources in nonattainment areas (see section 182(a)(2)(A)), must not interfere with applicable requirements including requirements concerning attainment (see section 110(l)), and must not relax existing requirements in effect prior to enactment of the 1990 CAA amendments (see section 193). The VCAPCD regulates sources within a severe ozone nonattainment area. 40 CFR 81.305. Therefore Rule 74.9 must fulfill RACT requirements for such sources.

Guidance and policy documents that we used to define specific enforceability and RACT requirements include the following:

- *Requirements for Preparation, Adoption, and Submittal of Implementation Plans,* U.S. EPA, 40 CFR part 51.
- *Issues Relating to VOC Regulation, Cutpoints, Deficiencies, and Deviations* (the ''Blue Book''), U.S. EPA, OAQPS (May 25, 1988).
- *State Implementation Plans; Nitrogen Oxides Supplement to the General Preamble for the Implementation of Title I of the Clean Air Act Amendments of 1990* (the ''NO_X Supplement to the General Preamble''), U.S. EPA, 57 FR 55620 (November 25, 1992).
- *Determination of Reasonably Available Control Technology and Best Available Retrofit Control Technology for Stationary Spark-Ignited Internal Combustion Engines,* California Air Resources Board (November 2001).

B. Does the Rule Meet the Evaluation Criteria?

The revised Rule 74.9 includes an exemption for engines used on the offshore SNI and AI. The exemptions to Rule 74.9 are reasonable, because the VCAPCD federal ozone nonattainment area does not include SNI and AI and the 1994/1995 ozone Air Quality Management Plan does not rely on decreasing NO_X emission controls on SNI and AI. Therefore there will be no interference with the requirements concerning attainment of the ozone National Ambient Air Quality Standards in the VCAPCD nonattainment area and the rule complies with section 110(l) of the CAA.

The revisions to Rule 74.9 do not affect the requirements for sources within the nonattainment area. For these sources, Rule 74.9 exceeds RACT requirements for NOX emission standards and meets the more stringent NOX and CO emission standards for Best Available Retrofit Control Technology (BARCT).

We believe the rule is consistent with the relevant policy and guidance regarding enforceability and SIP relaxations. The TSD has more information on our evaluation.

C. EPA Recommendations To Further Improve The Rule

The VCAPCD Rule 74.9 TSD describes additional rule revisions that do not affect EPA's current action but are recommended for the next time the local agency modifies the rule.

D. Public Comment and Final Action

As authorized in section 110(k)(3) of the CAA, EPA is fully approving the submitted rule because we believe it fulfills all relevant requirements. We do not think anyone will object to this approval, so we are finalizing the approval without proposing it in advance. However, in the Proposed Rules section of this **Federal Register**, we are simultaneously proposing approval of the same submitted rule. If we receive adverse comments by November 25, 2002, we will publish a timely withdrawal in the **Federal Register** to notify the public that the direct final approval will not take effect and we will address the comments in a subsequent final action based on the proposal. If we do not receive timely adverse comments, the direct final approval will be effective without further notice on December 24, 2002.

This will incorporate the rule into the federally-enforceable SIP.

III. Background Information

Why Was This Rule Submitted?

NO_X helps produce ground-level ozone, smog, and particulate matter which harm human health and the environment. EPA has established National Ambient Air Quality Standards (NAAQS) for ozone. Section 110(a) of the CAA requires states to submit regulations in order to achieve and maintain the NAAQS. Table 2 lists some of the national milestones leading to the submittal of these local agency NO_X rules.

TABLE 2.—OZONE NONATTAINMENT MILESTONES

Date	Event
March 3, 1978	EPA promulgated a list of ozone nonattainment areas under the Clean Air Act as amended in 1977. 43 FR 8964; 40 CFR 81.305.
May 26, 1988	EPA notified Governors that parts of their SIPs were inadequate to attain and maintain the ozone standard and requested that they correct the deficiencies (EPA's SIP-Call). See section 110(a)(2)(H) of the pre-amended Act.
November 15, 1990	Clean Air Act Amendments of 1990 were enacted. Pub. L. 101–549, 104 Stat. 2399, codified at 42 U.S.C. 7401–7671*q*.
May 15, 1991	Section 182(a)(2)(A) requires that ozone nonattainment areas correct deficient RACT rules by this date.

IV. Administrative Requirements

Under Executive Order 12866 (58 FR 51735, October 4, 1993), this action is not a ''significant regulatory action'' and therefore is not subject to review by the Office of Management and Budget. For this reason, this action is also not subject to Executive Order 13211, ''Actions Concerning Regulations That Significantly Affect Energy Supply, Distribution, or Use'' (66 FR 28355, May 22, 2001). This action merely approves state law as meeting federal requirements and imposes no additional requirements beyond those imposed by state law. Accordingly, the Administrator certifies that this rule will not have a significant economic impact on a substantial number of small entities under the Regulatory Flexibility Act (5 U.S.C. 601 *et seq.*). Because this rule approves pre-existing requirements under state law and does not impose any additional enforceable duty beyond that required by state law, it does not contain any unfunded mandate or significantly or uniquely affect small governments, as described in the Unfunded Mandates Reform Act of 1995 (Public Law 104–4).

This rule also does not have tribal implications because it will not have a substantial direct effect on one or more Indian tribes, on the relationship between the Federal Government and Indian tribes, or on the distribution of power and responsibilities between the Federal Government and Indian tribes, as specified by Executive Order 13175 (65 FR 67249, November 9, 2000). This action also does not have Federalism implications because it does not have substantial direct effects on the States, on the relationship between the national government and the States, or on the distribution of power and responsibilities among the various levels of government, as specified in Executive Order 13132 (64 FR 43255, August 10, 1999). This action merely approves a state rule implementing a Federal standard, and does not alter the relationship or the distribution of power and responsibilities established in the CAA. This rule also is not subject to Executive Order 13045, ''Protection of Children from Environmental Health Risks and Safety Risks'' (62 FR 19885, April 23, 1997), because it is not economically significant.

In reviewing SIP submissions, EPA's role is to approve state choices, provided that they meet the criteria of the CAA. In this context, in the absence of a prior existing requirement for the State to use voluntary consensus standards (VCS), EPA has no authority to disapprove a SIP submission for failure to use VCS. It would thus be inconsistent with applicable law for EPA, when it reviews a SIP submission, to use VCS in place of a SIP submission that otherwise satisfies the provisions of the CAA. Thus, the requirements of section 12(d) of the National Technology Transfer and Advancement Act of 1995 (15 U.S.C. 272 note) do not apply. This rule does not impose an information collection burden under the provisions of the Paperwork Reduction Act of 1995 (44 U.S.C. 3501 *et seq.*).

The Congressional Review Act, 5 U.S.C. 801 *et seq.*, as added by the Small Business Regulatory Enforcement Fairness Act of 1996, generally provides that before a rule may take effect, the agency promulgating the rule must submit a rule report, which includes a copy of the rule, to each House of the Congress and to the Comptroller General of the United States. EPA will submit a report containing this rule and other required information to the U.S. Senate, the U.S. House of Representatives, and the Comptroller General of the United States prior to publication of the rule in the **Federal Register**. A major rule cannot take effect until 60 days after it is published in the **Federal Register**. This action is not a ''major rule'' as defined by 5 U.S.C. 804(2).

Under section 307(b)(1) of the CAA, petitions for judicial review of this action must be filed in the United States Court of Appeals for the appropriate circuit by December 24, 2002. Filing a petition for reconsideration by the Administrator of this final rule does not affect the finality of this rule for the purposes of judicial review nor does it extend the time within which a petition for judicial review may be filed, and shall not postpone the effectiveness of such rule or action. This action may not be challenged later in proceedings to enforce its requirements. See section 307(b)(2).

List of Subjects in 40 CFR Part 52

Environmental protection, Air pollution control, Carbon monoxide, Incorporation by reference, Intergovernmental relations, Nitrogen dioxide, Ozone, Reporting and recordkeeping requirements.

Authority: 42 U.S.C. 7401 *et seq.*

Dated: August 30, 2002.

Keith Takata,

Acting Regional Administrator, , Region IX.

Part 52, chapter I, title 40 of the Code of Federal Regulations is amended as follows:

PART 52—[AMENDED]

1. The authority citation for part 52 continues to read as follows:

Authority: 42 U.S.C. 7401 *et seq.*

Subpart F—California

2. Section 52.220 is amended by adding paragraph (c)(284)(i)(D) to read as follows:

§ 52.220 Identification of plan.

* * * * *

(c) * * *

(284) * * *

(i) * * *

(D) Ventura County Air Pollution Control District

(*1*) Rule 74.9, adopted on July 21, 1981 and amended on November 14, 2000.

* * * * *

[FR Doc. 02–27134 Filed 10–24–02; 8:45 am]

BILLING CODE 6560–50–P

DEPARTMENT OF HEALTH AND HUMAN SERVICES

Centers for Medicare & Medicaid Services

42 CFR Parts 431 and 438

[CMS–2104–F2]

RIN–0938–AK96

Medicaid Program; Medicaid Managed Care: New Provisions Correcting Amendment

AGENCY: Centers for Medicare & Medicaid Services (CMS), HHS.

ACTION: Final rule; correcting amendment.

SUMMARY: In the June 14, 2002 issue of the **Federal Register** (67 FR 40989), we published a final rule implementing the Medicaid managed care provisions of the Balanced Budget Act of 1997. The effective date of the final rule was August 13, 2002. This document corrects a limited number of technical and typographical errors identified in the June 14, 2002 final rule.

EFFECTIVE DATE: This correcting amendment is effective November 25, 2002.

FOR FURTHER INFORMATION CONTACT: Bruce Johnson, (410) 786–0615.

SUPPLEMENTARY INFORMATION:

Background

Need for Corrections

In FR Doc. 02–14747 of June 14, 2002, (67 FR 40989), we published final regulations that implemented the statutory provisions from the Balanced Budget Act of 1997 (BBA) related to Medicaid managed care. As published, a provision of § 431.220, and several provisions of the new part 438, contained technical errors. The errors included typographical errors, incorrect cross-references, incorrectly designated paragraphs, and contradictions. We are in this final rule correcting the identified errors.

Summary of Technical Corrections to the Regulations Text of the June 14, 2002 Medicaid Managed Care Final Rule

Section 431.220 identifies when the State agency must grant a fair hearing to a beneficiary, and was amended by the June 14, 2002 final rule to add new reasons or circumstances under which a State fair hearing must be granted. Section 438.56(f)(2) specifies that an enrollee may request a State fair hearing, for example, if the enrollee is dissatisfied with the State agency's determination that there is not good cause for disenrollment. The preamble to the final rule makes clear that it was CMS'' intent that these new rights be provided.

However, we inadvertently neglected to include a cross-reference to this new right in § 431.220, under the heading ''*When a hearing is required*''. This is corrected by adding a new item (7) to § 431.220, identifying the new circumstance when a State fair hearing must be granted as related to disenrollment.

In § 438.8, which identifies provisions that apply to PIHPs and PAHPs, paragraph (b) identifies provisions of part 438 that apply to prepaid ambulatory health plans (PAHPs). In this provision, we inadvertently omitted a reference to prohibitions against affiliations with individuals debarred by Federal agencies in § 438.610. Again, it is clear from the preamble, and from the text of § 438.610, that this provision was intended to apply to PAHPs. This error is corrected by adding a new item (8) to § 438.8(b) to reference prohibited affiliations with individuals debarred by Federal agencies in § 438.610.

In § 438.10, which sets forth requirements relating to information, in subparagraph (e)(1)(ii) the term ''PIHP'' and in subparagraph (i)(3) the term ''potential enrollee,'' are in the singular form, but should be plural to conform with other nouns that are plural in the provision. These grammatical errors are corrected by making the terms plural.

In several paragraphs, there were inaccurate cross-references to other provisions of the regulations text. In § 438.10(f)(6)(iv), the reference to ''§ 438.10(h)'' should be ''§ 438.10(h)(1)''. In § 438.52(d), the reference to paragraphs ''(b)(2) or (b)(3)'' should be ''(b) or (c)''. In § 438.100(b)(iii), the reference to ''§ 438.10(f)(6)(xiii)'' should be ''§ 438.10(f)(6)(xii)''. In § 438.102(c), the reference to ''§ 438.10(e)(2)(ii)'' should be ''§ 438.10(e)(2)(ii)(E)''. These are corrected in this final rule by inserting the correct regulatory citations.

In both subparagraph (b)(2) and paragraph (c) in § 438.102, which addresses provider-enrollee communications, we added the clarifying term ''paragraphs'' following ''§ 438.102'.

In § 438.114, governing emergency and post-stabilization services, the requirements in paragraphs (a) through (e) were intended to apply to all types of managed care programs. It is clear from the preamble to the final rule that this was CMS's intent. However, in paragraph (d)(ii), ''PIHP'' and ''PAHP'' inadvertently were omitted.

This is corrected in this final rule by including a reference to ''PIHP'' and ''PAHP''.

Paragraph (b)(2)(i) of § 438.116, which sets forth solvency standards, creates an exception to the solvency standard in paragraph (b) for entities that do not provide both inpatient hospital and physician services. By definition, PAHPs would not provide inpatient services. Therefore, the references to PAHPs in paragraph (b) are extraneous. This is corrected in this final rule by removing the two references to PAHPs in paragraphs (b)(1) and (2).

In two places, paragraphs are incorrectly designated. In § 438.214, on provider selection, there are two paragraphs designated ''(a)''. This is corrected in this final rule by redesignating the second paragraph as ''(b)''. In § 438.810, on expenditures for enrollment broker services, the last paragraph (c) is actually a continuation of paragraph (b) specifying conditions that enrollment brokers must meet. This is corrected in this final rule by redesignating paragraph ''(c)'' as ''(b)(3)''.

In § 438.730, on sanctions by CMS, subparagraphs (e)(1) and (e)(2), the term ''HMO'' is used. The BBA replaced the term ''Health Maintenance Organization (HMO)'' with ''Managed Care Organization (MCO)''. The obsolete references to HMO in paragraph (e) of § 438.730 are corrected in this final rule by removing ''HMO'' and replacing it with the new acronym ''MCO''.

In § 438.810, governing expenditures for enrollment broker services, a reference to PAHPs was inadvertently omitted from the definition of ''Choice counseling'' in paragraph (a), even though the text in the remainder of the provisions in § 438.810 includes such a reference. This is corrected in this final

rule by including the term ''PAHP'' in the definition of ''Choice counseling''.

Waiver of Proposed Rulemaking

Ordinarily, a final rule is first published in the **Federal Register** in proposed form to provide a period for public comment before the provisions of the final rule take effect. We can waive this procedure, however, if we find good cause that a notice and comment procedure is impracticable, unnecessary, or contrary to the public interest, and incorporate a statement of finding in the final rule.

We find that it is unnecessary to undertake notice and public comment procedures in this case because the technical corrections made in this final rule do not make any substantive policy changes. This document merely makes technical corrections and conforming changes designed to clarify the provisions of the June 14, 2002 final rule, which was subjected to notice and comment. Therefore, for good cause, we waive notice and public comment procedures under 5 U.S.C. 553(b)(B).

Correction of Errors

In FR Doc. 02–14747 of June 14, 2002, (67 FR 4089), we are making the following corrections:

Corrections to the Regulations Text

List of Subjects

42 CFR Part 431

Grant programs-health, Health facilities, Medicaid, Privacy, Reporting and recordkeeping requirements.

42 CFR Part 438

Grant programs-health, Managed care entities, Medicaid, Quality assurance, Reporting and recordkeeping requirements.

Accordingly, 42 CFR parts 431 and 438 are corrected by making the following correcting amendments:

PART 431—STATE ORGANIZATION AND GENERAL ADMINISTRATION

1. The authority citation for part 431 continues to read as follows:

Authority: Sec. 1102 of the Social Security Act (42 U.S.C. 1302).

§ 431.220 [Corrected]

2. In § 431.220, add new paragraph (a)(7) to read as follows:

§ 431.220 When a hearing is required.

(a) * * *

(7) Any enrollee who is entitled to a hearing under subpart B of part 438 of this chapter.

* * * * *

PART 438—MANAGED CARE

1. The authority citation for part 438 continues to read as follows:

Authority: Sec. 1102 of the Social Security Act (42 U.S.C. 1302).

§ 438.8 [Corrected]

2. In § 438.8, add a new paragraph (b)(8) to read as follows:

§ 438.8 Provisions that apply to PIHPs and PAHPs.

* * * * *

(b) * * *

(8) Prohibitions against affiliations with individuals debarred by Federal agencies in § 438.610.

§ 438.10 [Corrected]

3. In § 438.10(e)(1)(ii), ''PIHP'' is revised to read ''PIHPs''.

4. In § 438.10(f)(6)(iv), the last reference to ''§ 438.10(h)'' is revised to read ''§ 438.10(h)(1)''.

5. In § 438.10(i)(3), the last reference to ''potential enrollee'' is revised to read ''potential enrollees''.

§ 438.52 [Corrected]

6. In § 438.52(d), the reference to ''(b)(2) or (b)(3)'' is revised to read ''(b) or (c)''.

§ 438.100 [Corrected]

7. In § 438.100(b)(2)(iii), the reference to ''§ 438.10(f)(6)(xiii)'' is revised to read ''§ 438.10(f)(6)(xii)''.

§ 438.102 [Corrected]

8. In § 438.102(b)(2), ''§ 438.10(e) and (f)'' is revised to read ''§ 438.10, paragraphs (e) and (f)''.

9. In § 438.102(c), ''§ 438.10(e)(2)(ii) and (f)(6)(xii)'' is revised to read ''§ 438.10, paragraphs (e)(2)(ii)(E) and (f)(6)(xii)''.

§ 438.114 [Corrected]

10. In § 438.114(d)(1)(ii), the phrase ''PIHP, PAHP'' is added between ''MCO'' and ''or applicable State entity''.

§ 438.116 [Corrected]

11. In § 438.116(b)(1), ''MCO, PIHP, and PAHP'' is revised to read ''MCO or PIHP''.

12. In § 438.116(b)(2), ''MCO, PIHP, or PAHP'' is revised to read ''MCO or PIHP''.

§ 438.703 [Corrected]

13. In § 438.703(e)(1) and (e)(2), the term ''HMO'' is revised to read ''MCO''.

§ 438.810 [Corrected]

14. In § 438.810(a), in the definition of ''Choice counseling'', '', PAHP,'' is added between ''PIHP'' and ''or PCCM''.

15. In § 438.810, paragraph (c) is redesignated as paragraph (b)(3).

(Catalog of Federal Domestic Assistance Program No. 93.778, Medical Assistance Program)

Dated: October 17, 2002.

Ann Agnew,

Executive Secretary to the Department.

[FR Doc. 02–27256 Filed 10–24–02; 8:45 am]

BILLING CODE 4120–01–P

DEPARTMENT OF DEFENSE

48 CFR Parts 208 and 216

[DFARS Case 2001–D017]

Defense Federal Acquisition Regulation Supplement; Competition Requirements for Purchase of Services Under Multiple Award Contracts

AGENCY: Department of Defense (DoD).

ACTION: Final rule.

SUMMARY: DoD has issued a final rule amending the Defense Federal Acquisition Regulation Supplement (DFARS) to implement Section 803 of the National Defense Authorization Act for Fiscal Year 2002. Section 803 requires DoD to issue DFARS policy requiring competition in the purchase of services under multiple award contracts.

DATES: Effective Date: October 25, 2002.

Applicability Date: This rule applies to all orders for services placed under multiple award contracts on or after October 25, 2002, regardless of whether the multiple award contracts were awarded before, on, or after that date.

FOR FURTHER INFORMATION CONTACT: Ms. Susan Schneider, Defense Acquisition Regulations Council, OUSD(AT&L)DP(DAR), IMD 3C132, 3062 Defense Pentagon, Washington, DC 20301–3062. Telephone (703) 602–0326; facsimile (703) 602–0350. Please cite DFARS Case 2001–D017.

SUPPLEMENTARY INFORMATION:

Notification of training opportunities: DoD and civilian agency contracting professionals that place orders under multiple award contracts using DoD funds, and contractors that sell services on multiple award contracts, should receive training on the new procedures for placing orders over $100,000 for services. DoD has developed many training tools on Section 803 and will be providing training in the DC metro area. Please visit the Defense Procurement Home Page, ''Interest Items'' drop-down box, for Section 803 training materials and lists of training opportunities at *http://www.acq.osd.mil/dp.* Additional questions regarding training should be directed to Melissa Rider at

melissa.rider@osd.mil or (703) 695–1098.

A. Background

This rule amends DFARS Parts 208 and 216 to implement Section 803 of the National Defense Authorization Act for Fiscal Year 2002 (Public Law 107–107). Section 803 requires DoD to issue DFARS policy requiring competition in the purchase of services under multiple award contracts. Multiple award contracts include the Multiple Award Schedules (MAS) Program operated by the General Services Administration (GSA) and multiple award indefinite-quantity (task and delivery) order contracts issued pursuant to FAR 16.504. Competition requirements for the MAS are set forth in DFARS 208.404–70. Competition requirements for multiple award indefinite-quantity contracts other than the MAS are covered in DFARS 216.505–70.

While DFARS 208.404–70, addressing MAS ordering, focuses on competition, DoD recognizes that additional regulatory coverage is needed to improve practices related to the acquisition of services under the MAS. In this regard, the Director of Defense Procurement is working with the other members of the Federal Acquisition Regulatory Council on separate revisions to FAR Subpart 8.4 that will provide Governmentwide guidance on considerations, in addition to competition, that must be taken into account to ensure sound MAS purchasing. These considerations include, among others, use of statements of work, effective pricing of orders, and proper documentation of award decisions.

In addition, the Administrator of the Office of Federal Procurement Policy (OFPP) has determined that additional clarification is necessary with respect to the structuring of orders under the MAS. FAR 12.207 currently requires that agencies use firm-fixed-price contracts or fixed-price contracts with economic price adjustment for the acquisition of commercial items. FAR 12.207 further states that use of any other contract type to acquire commercial items is prohibited. However, GSA's non-regulatory special ordering procedures for services permit use of additional contract types for commercial item acquisitions, which is the sole focus of the MAS. In particular, GSA's special ordering procedures permit orders to be priced on a time-and-materials or labor-hour basis under limited circumstances, *i.e.*, when the ordering office makes a determination that it is not possible at the time of placing the order to estimate accurately the extent or duration of the work or to anticipate cost with any reasonable degree of confidence. The special ordering procedures rely on somewhat different and less stringent safeguard provisions than those that the FAR imposes when time-and-materials and labor-hour contracts are used.

The OFPP Administrator intends to work with the other FAR Council members to develop appropriate revisions to current FAR coverage to address the use of time-and-materials and labor-hour contracts for commercial item acquisitions, including safeguards that are needed to effectively protect taxpayer interests when these contractual arrangements are used under FAR Part 12.

DoD published a proposed rule at 67 FR 15351 on April 1, 2002, and held a public meeting on April 29, 2002. Seventy-one sources submitted written comments on the proposed rule. DoD considered all comments in the development of the final rule. A summary of the comments grouped by subject area is provided below:

1. Small Business Impact

Comment: The rule, as applied to the Federal Supply Schedules, could harm the small business community, as the requirement to provide all contractors a fair notice of the intent to make a purchase will dramatically increase the number of competitors for each task, which will likely reduce the odds of winning an award and which will increase bid and proposal costs. The additional procedural burden imposed by this rule will encourage contracting officers to bundle requirements, thereby making it less likely that DoD's small business goals will be met.

DoD Response: The intent of the rule is to ensure fairness and enhance competition. The rule requires the Government to provide fair notice and opportunity. Because the rule does not require the contractor to respond to every notice—leaving the decision to respond to the contractor '' the fair notice requirement, as imposed by this rule, should not increase bid and proposal costs. In addition, the final rule has taken into account the resource burdens associated with the fair notice process that might precipitate efforts to bundle. With respect to Federal Supply Schedule purchases, for example, DoD has revised the rule to shift the emphasis from providing fair notice to all contractors to providing fair notice to as many contractors as practicable based on effective market research. The final rule should increase competition while minimizing burden (otherwise associated with notifying all contractors) by allowing contracting officers to provide notice to a reasonable number of offerors that can do the required work. DoD does not believe the rule will negatively affect the ability of DoD to meet its small business goals. However, a reminder that orders placed against Federal Supply Schedules may be credited toward the ordering agency's small business goals has been added to the rule.

Comment: It is unclear whether small business participation will be significantly affected and whether DoD will be allowed to continue with the practice of setting aside a portion of the work under multiple award contracts exclusively for small business concerns.

DoD Response: The rule does not change the policies associated with small business considerations. The preferences afforded small business concerns under FAR 8.404(b)(6) still apply.

2. Brooks Act Applicability

Comment: The rule should not apply to architect-engineer services. Acquisitions of architect-engineer services are governed by the Brooks Act (40 U.S.C. 541–544), as implemented in FAR Subpart 36.6.

DoD Response: Concur. The final rule has been amended to clarify that acquisitions of architect-engineer services are subject to the Brooks Act and the procedures in FAR Subpart 36.6.

3. Training

Comment: Sufficient training for contracting, program management, and requirements personnel is needed to ensure that services are acquired in accordance with regulatory requirements. Industry should have access to the same tools as Government personnel.

DoD Response: Concur. DoD has developed training packages that will be released with this DFARS rule and has revised the Defense Acquisition University contracting coursework to focus on the proper way to make awards under Federal Supply Schedules, Governmentwide acquisition contracts, multi-agency contracts and multiple award contracts. Additionally, DoD is exploring ways to best reach the program management community and has asked the Defense Acquisition University to insert material in its program management courses. DoD intends to make the Government training tools available to industry. An information briefing on this DFARS rule is available on the Defense Procurement Web site at http://www.acq.osd.mil/dp

under ''Special Interest Items'' in the dropdown box entitled ''Section 803.''

4. Clarification of Services Covered

Comment: DoD should revise the rule to clarify that the scope of the term ''services'' for purposes of the rule does not apply to product-like solutions, ancillary services, and transaction-based services. For example, the regulations that implement the Service Contract Act exempt contracts principally for the maintenance, calibration, or repair of many types of equipment, including automatic data processing equipment.

DoD Response: Do not concur. Section 803 provides no authority for DoD to limit the scope of the term ''services'' in the manner recommended by the respondent.

5. Electronic Notice

Comment: DoD should post the notice of fair opportunity to a specific web page or FedBizOpps.

DoD Response: Do not concur. The notice requirement is sufficiently addressed in the rule. The method of meeting that requirement is a management decision more appropriately made at the contracting office level. It should be noted that steps are being taken to improve transparency through electronic means. For example, GSA recently introduced ''e-buy'', among other things, to assist MAS customers in providing fair notice to MAS contractors. The availability of e-buy is highlighted in the rule.

6. Civilian Agency Applicability/ Economy Act

Comment: Clarification is needed regarding the applicability of Section 803 to civilian agencies and interagency acquisitions made under the Economy Act.

DoD Response: Section 803 applies to all DoD requirements for services, regardless of which agency acquires the services. The final rule addresses this issue by adding a statement to clarify that the rule also applies to orders placed by non-DoD agencies on behalf of DoD.

7. Effective Date

Comment: Clarification is needed regarding the timing for applicability of the rule.

DoD Response: Section 803 applies to all purchases of services made under multiple award contracts, regardless of whether the multiple award contracts were entered into before, on, or after the effective date of this rule. This DFARS rule contains the same effective date and applicability requirements. Contracting officers must review the terms and conditions of existing contracts to determine if modifications to the contracts are needed.

8. Exceptions to the Rule

Comment: The rule should provide an exception that allows a sole-source follow-on to an initially placed sole-source order with adequate justification and legal review.

DoD Response: The statute does not provide this authority. Section 803 authorizes use of the exceptions in 2304c(b) which allow for a logical follow-on to a task or delivery order already issued on a competitive basis.

9. Burden on Industry and Government

Comment: The rule is difficult to understand; the notification requirement will unnecessarily slow down the acquisition process and increase acquisition costs; and it will be burdensome for each company to continuously receive solicitations for work they have no interest in performing.

DoD Response: The intent of the rule is to ensure fairness by requiring a fair notice, fair opportunity to respond, and fair consideration of offers. The value added by the fairness component should outweigh any burdens associated with the rule. The final rule was drafted to provide as much flexibility as permitted by Section 803.

10. Blanket Purchase Agreement (BPA) Issues

Comment: The rule should be revised to delete the overly restrictive requirement that single award BPA tasks or services be firm-fixed-price, as this is not required by statute or policy. The BPA competition requirements in 208.404–70(d) should apply only to the initial establishment of the BPA, and thereafter the traditional Federal Supply Schedule rules for the placement of orders should apply.

DoD Response: DoD does not agree with the respondent's recommendation regarding the use of traditional Federal Supply Schedule rules for placement of orders, as this is contrary to the provisions of Section 803. However, as noted above, the OFPP Administrator intends to work with the other FAR Council members to develop appropriate FAR coverage addressing the use of time-and-materials and labor-hour contracts for commercial item acquisitions, including safeguards that are needed to effectively protect the government's interest when these contractual arrangements are used.

11. Ordering Procedures

Comment: The ordering procedures in the proposed rule were derived from FAR 16.505(b)(1), which was based upon the fair opportunity requirements of the Federal Acquisition Streamlining Act of 1994 (FASA). Section 803 displaced the ordering procedures under FASA. Therefore, appropriate revisions should be made to the rule, *e.g.*, the statement in 216.505–70(d)(3)(ii) to ''Not use any method (such as allocation or designation of any preferred awardee)'' is unnecessary and confuses the issue, because Section 803 now requires that orders be placed on a competitive basis that affords all contractors a fair opportunity to submit an offer. Obviously, an allocation method cannot be used under the Section 803 description of competitive basis, so there is no need to mention this issue.

DoD Response: DoD agrees that language in the proposed rule at 216.505–70(d)(3)(i) through (iv) and 216.505–70(e)(2) and (3) is not essential given that the rule makes competition requirements clear.

This rule was not subject to Office of Management and Budget review under Executive Order 12866, dated September 30, 1993.

B. Regulatory Flexibility Act

DoD certifies that this final rule will not have a significant economic impact on a substantial number of small entities within the meaning of the Regulatory Flexibility Act, 5 U.S.C. 601, *et seq.* The rule clarifies and strengthens existing FAR requirements for competition in the placement of orders under multiple award contracts. The rule makes no change to preferences afforded small business concerns under FAR 8.404(b)(6) for the placement of orders against Federal Supply Schedules. FAR 8.404(b)(6) specifies that contracting officers should (1) consider including one or more small, women-owned small, and/or small disadvantaged business schedule contractor(s) when conducting evaluations and before placing an order; and (2) for orders exceeding the micro-purchase threshold, give preference to the items of small business concerns when two or more items at the same delivered price will satisfy the requirement.

C. Paperwork Reduction Act

The Paperwork Reduction Act does not apply because the rule does not impose any information collection requirements that require the approval of the Office of Management and Budget under 44 U.S.C. 3501, *et seq.*

List of Subjects in 48 CFR Parts 208 and 216

Government procurement.

Michele P. Peterson,

Executive Editor, Defense Acquisition Regulations Council.

Therefore, 48 CFR Parts 208 and 216 are amended as follows:

1. The authority citation for 48 CFR Parts 208 and 216 continues to read as follows:

Authority: 41 U.S.C. 421 and 48 CFR Chapter 1.

PART 208—REQUIRED SOURCES OF SUPPLIES AND SERVICES

2. The heading of Subpart 208.4 is revised to read as follows:

Subpart 208.4—Federal Supply Schedules

3. Section 208.404 is amended by adding paragraph (b) to read as follows:

208.404 Using schedules.

* * * * *

(b) *Ordering procedures for optional use schedules*—

(2) *Orders exceeding the micro-purchase threshold but not exceeding the maximum order threshold.* The procedures at FAR 8.404(b)(2), regarding review of catalogs or pricelists of at least three schedule contactors, do not apply to orders for services exceeding $100,000. Instead, use the procedures at 208.404–70.

(3) *Orders exceeding the maximum order threshold.*

(i) For orders for services exceeding $100,000, use the procedures at 208.404–70 in addition to the procedures at FAR 8.404(b)(3)(i).

(7) *Documentation.* For orders for services exceeding $100,000, use the procedures at 208.404–70 in addition to the procedures at FAR 8.404(b)(7).

4. Section 208.404–70 is added to read as follows:

208.404–70 Additional ordering procedures for services.

(a) This subsection—

(1) Implements Section 803 of the National Defense Authorization Act for Fiscal Year 2002 (Pub. L. 107–107); and

(2) Also applies to orders placed by non-DoD agencies on behalf of DoD.

(b) Each order for services exceeding $100,000 shall be placed on a competitive basis in accordance with paragraph (c) of this subsection, unless the contracting officer waives this requirement on the basis of a written determination that—

(1) One of the circumstances described at FAR 16.505(b)(2)(i) through (iii) applies to the order; or

(2) A statute expressly authorizes or requires that the purchase be made from a specified source.

(c) An order for services exceeding $100,000 is placed on a competitive basis only if the contracting officer provides a fair notice of the intent to make the purchase, including a description of the work the contractor shall perform and the basis upon which the contracting officer will make the selection, to—

(1) As many schedule contractors as practicable, consistent with market research appropriate to the circumstances, to reasonably ensure that offers will be received from at least three contractors that can fulfill the work requirements, and the contracting officer—

(i)(A) Receives offers from at least three contractors that can fulfill the work requirements; or

(B) Determines in writing that no additional contractors that can fulfill the work requirements could be identified despite reasonable efforts to do so (documentation should clearly explain efforts made to obtain offers from at least three contractors); and

(ii) Ensures all offers received are fairly considered; or

(2) All contractors offering the required services under the applicable multiple award schedule, and affords all contractors responding to the notice a fair opportunity to submit an offer and have that offer fairly considered. Posting of a request for quotations on the General Services Administration's electronic quote system, ''e-Buy'' (*http://www.gsaAdvantage.gov*), is one medium for providing fair notice to all contractors as required by this paragraph (c).

(d) Single and multiple blanket purchase agreements (BPAs) may be established against Federal Supply Schedules (see FAR 8.404(b)(4)) if the contracting officer—

(1) Follows the procedures in paragraphs (b) and (c) of this subsection;

(2)(i) For a single BPA, defines the individual tasks to be performed; or

(ii) For multiple BPAs, forwards the statement of work and the selection criteria to all multiple BPA holders before placing orders; and

(3) Reviews established BPAs no less than annually to determine whether the BPA still represents the best value.

(e) Orders placed against Federal Supply Schedules may be credited toward the ordering agency's small business goals (see FAR 8.404(b)(6)).

PART 216—TYPES OF CONTRACTS

5. Section 216.501–1 is added to read as follows:

216.501–1 Definitions.

Multiple award contract, as used in this subpart, means—

(1) A multiple award task order contract entered into in accordance with FAR 16.504(c); or

(2) Any other indefinite-delivery, indefinite-quantity contract that an agency enters into with two or more sources under the same solicitation.

6. Section 216.505–70 is added to read as follows:

216.505–70 Orders for services under multiple award contracts.

(a) This subsection—

(1) Implements Section 803 of the National Defense Authorization Act for Fiscal Year 2002 (Pub. L. 107–107);

(2) Applies to orders for services exceeding $100,000 placed under multiple award contracts, instead of the procedures at FAR 16.505(b)(1) and (2) (see Subpart 208.4 for procedures applicable to orders placed against Federal Supply Schedules);

(3) Also applies to orders placed by non-DoD agencies on behalf of DoD; and

(4) Does not apply to orders for architect-engineer services, which shall be placed in accordance with the procedures in FAR subpart 36.6.

(b) Each order for services exceeding $100,000 shall be placed on a competitive basis in accordance with paragraph (c) of this subsection, unless the contracting officer waives this requirement on the basis of a written determination that—

(1) One of the circumstances described at FAR 16.505(b)(2)(i) through (iv) applies to the order; or

(2) A statute expressly authorizes or requires that the purchase be made from a specified source.

(c) An order for services exceeding $100,000 is placed on a competitive basis only if the contracting officer—

(1) Provides a fair notice of the intent to make the purchase, including a description of the work the contractor shall perform and the basis upon which the contracting officer will make the selection, to all contractors offering the required services under the multiple award contract; and

(2) Affords all contractors responding to the notice a fair opportunity to submit an offer and have that offer fairly considered.

(d) When using the procedures in this subsection—

(1) The contracting officer should keep contractor submission requirements to a minimum;

(2) The contracting officer may use streamlined procedures, including oral presentations;

(3) The competition requirements in FAR part 6 and the policies in FAR subpart 15.3 do not apply to the ordering process, but the contracting officer shall consider price or cost under each order as one of the factors in the selection decision; and

(4) The contracting officer should consider past performance on earlier orders under the contract, including quality, timeliness, and cost control.

[FR Doc. 02–27110 Filed 10–24–02; 8:45 am]

BILLING CODE 5001–08–P

DEPARTMENT OF DEFENSE

48 CFR Part 201

[DFARS Case 2002–D021]

Defense Federal Acquisition Regulation Supplement; Contracting Officer Qualifications

AGENCY: Department of Defense (DoD).

ACTION: Final rule.

SUMMARY: DoD has issued a final rule amending the Defense Federal Acquisition Regulation Supplement (DFARS) to implement Section 824 of the National Defense Authorization Act for Fiscal Year 2002. Section 824 revised the qualification requirements that a new entrant into the contracting field must meet in order to serve as a contracting officer with authority to award or administer contracts exceeding the simplified acquisition threshold.

EFFECTIVE DATE: October 25, 2002.

FOR FURTHER INFORMATION CONTACT: Ms. Susan Schneider, Defense Acquisition Regulations Council, OUSD (AT&L) DP (DAR), IMD 3C132, 3062 Defense Pentagon, Washington, DC 20301–3062. Telephone (703) 602–0326; facsimile (703) 602–0350. Please cite DFARS Case 2002–D021.

SUPPLEMENTARY INFORMATION:

A. Background

This final rule revises DFARS 201.603–2 to implement Section 824 of the National Defense Authorization Act for Fiscal Year 2002 (Public Law 107–107). Section 824 amended 10 U.S.C. 1724 to revise the qualification requirements that a new entrant into the contracting field must meet in order to serve as a contracting officer with authority to award or administer contracts exceeding the simplified acquisition threshold. The revised qualifications include a requirement for a baccalaureate degree and 24 semester credit hours of study in a business-related discipline.

This rule was not subject to Office of Management and Budget review under Executive Order 12866, dated September 30, 1993.

B. Regulatory Flexibility Act

This rule will not have a significant cost or administrative impact on contractors or offerors, or a significant effect beyond the internal operating procedures of DoD. Therefore, publication for public comment is not required. However, DoD will consider comments from small entities concerning the affected DFARS subpart in accordance with 5 U.S.C. 610. Such comments should cite DFARS Case 2002–D021.

C. Paperwork Reduction Act

The Paperwork Reduction Act does not apply because the rule does not impose any information collection requirements that require the approval of the Office of Management and Budget under 44 U.S.C. 3501, *et seq.*

List of Subjects in 48 CFR Part 201

Government procurement.

Michele P. Peterson,

Executive Editor, Defense Acquisition Regulations Council.

Therefore, 48 CFR part 201 is amended as follows:

1. The authority citation for 48 CFR part 201 continues to read as follows:

Authority: 41 U.S.C. 421 and 48 CFR Chapter 1.

PART 201—FEDERAL ACQUISITION REGULATIONS SYSTEM

2. Section 201.603–2 is revised to read as follows:

201.603–2 Selection.

(1) In accordance with 10 U.S.C. 1724, in order to qualify to serve as a contracting officer with authority to award or administer contracts for amounts above the simplified acquisition threshold, a person must—

(i) Have completed all contracting courses required for a contracting officer to serve in the grade in which the employee or member of the armed forces will serve;

(ii) Have at least 2 years experience in a contracting position;

(iii) Have—

(A) Received a baccalaureate degree from an accredited educational institution; and

(B) Completed at least 24 semester credit hours, or equivalent, of study from an accredited institution of higher education in any of the following disciplines: accounting, business finance, law, contracts, purchasing, economics, industrial management, marketing, quantitative methods, and organization and management; and

(iv) Meet such additional requirements, based on the dollar value and complexity of the contracts awarded or administered in the position, as may be established by the Secretary of Defense.

(2) The qualification requirements in paragraph (1)(iii) of this subsection do not apply to a DoD employee or member of the armed forces who—

(i) On or before September 30, 2000, occupied—

(A) A contracting officer position with authority to award or administer contracts above the simplified acquisition threshold; or

(B) A position either as an employee in the GS–1102 occupational series or a member of the armed forces in an occupational specialty similar to the GS–1102 series;

(ii) Is in a contingency contracting force; or

(iii) Is an individual appointed to a 3-year developmental position. Information on developmental opportunities is contained in DoD Manual 5000.52–M, Acquisition Career Development Program.

(3) Waivers to the requirements in paragraph (1) of this subsection may be authorized. Information on waivers is contained in DoD Manual 5000.52–M.

[FR Doc. 02–27107 Filed 10–24–02; 8:45 am]

BILLING CODE 5001–08–P

DEPARTMENT OF DEFENSE

48 CFR Parts 208, 239, 251, and 252

[DFARS Case 2000–D023]

Defense Federal Acquisition Regulation Supplement; Enterprise Software Agreements

AGENCY: Department of Defense (DoD).

ACTION: Final rule.

SUMMARY: DoD has issued a final rule amending the Defense Federal Acquisition Regulation Supplement (DFARS) to add policy pertaining to the use of enterprise software agreements for the acquisition of commercial software and software maintenance.

EFFECTIVE DATE: October 25, 2002.

FOR FURTHER INFORMATION CONTACT: Ms. Susan Schneider, Defense Acquisition Regulations Council, OUSD (AT&L) DP (DAR), IMD 3C132, 3062 Defense Pentagon, Washington, DC 20301–3062. Telephone (703) 602–0326; facsimile

(703) 602–0350. Please cite DFARS Case 2000–D023.

SUPPLEMENTARY INFORMATION:

A. Background

This rule adds a new DFARS Subpart 208.74 to address the use of enterprise software agreements for the acquisition of commercial software and software maintenance in accordance with the DoD Enterprise Software Initiative. This initiative promotes the use of enterprise software agreements with contractors that offer DoD favorable terms and pricing for commercial software and related services. Associated DFARS changes are made in Parts 208, 239, 251, and 252.

DoD published a proposed rule at 67 FR 4231 on January 29, 2002. Five sources submitted comments on the proposed rule. DoD considered all comments in the development of the final rule. A discussion of the comments is provided below:

Comment: Due to a lack of central budget control, ''profit centers'' cannot bargain as a unit to establish an Enterprise Software Agreement (ESA), and vendors must contract with each organization individually. *DoD Response:* The lack of a centralized approach to DoD software budgeting is a prime reason for the existence of the Enterprise Software Initiative (ESI). By consolidating established department and agency requirements for commercial software, ESI gains pricing and terms concessions not normally available to the individual or the small command buyer.

Comment: New vendors may be at a competitive disadvantage. Lack of objective performance criteria will deny new vendors the opportunity to compete on merit versus familiarity. *DoD Response:* ESI does not eliminate the need for acquisition planning and market research. Use of ESAs is not mandatory, but must be considered only when requirements for products available under the agreements have already been established.

Comment: The term ''most favored customer'' at 208.7403(e)(2) is vague and should be eliminated from the rule. *DoD Response:* The intent is to give the software product manager (SPM) the opportunity to adjust the ESA to provide the best value to the customer. The language at 208.7403(e)(2) has been revised to more clearly convey this intent.

Comment: The rule will reduce the number of vendors able to market and sell commercial software products to DoD. *DoD Response:* Authorized commercial resellers with General Services Administration (GSA) Federal Supply Schedules are eligible to carry ESAs for commercial software products. In this sense, the software manufacturer determines the universe of potentially eligible resellers, and the resellers themselves decide whether or not to apply for and maintain a GSA Schedule, and whether or not to comply with the terms and conditions of a DoD ESA.

Comment: The ''nonstandard'' methods of the rule may encourage software manufacturers to keep products off ESAs. *DoD Response:* The use of blanket purchase agreements against GSA Schedules is a standard DoD acquisition practice. There is no evidence to indicate that this rule will discourage manufacturers from seeking ESAs or from placing commercial products on ESAs.

Comment: Industrial funding fees will cancel potential savings of volume purchases. *DoD Response:* No additional resources are required to manage ESAs. DoD ESAs result in lower overhead for contract maintenance and result in net savings or cost avoidance for the Government.

Comment: Use of BPAs against GSA Schedules for the acquisition of software implies incorporation of the clause at FAR 52.227–14, Rights of Data. This clause may conflict with DoD policy on intellectual property rights and uses. The rule should follow DoD, not GSA, policy. *DoD Response:* Use of BPAs against GSA Schedules is a standard acquisition practice in DoD and is in accordance with FAR subpart 8.4 and DFARS subpart 208.4.

Comment: Customized terms and conditions must often be negotiated. The 90-day process for allowing the SPM to negotiate on behalf of the purchaser adds needless delay and cost. *DoD Response:* Many ESAs contain special provisions for pricing and other terms and conditions. Should those provisions not be sufficient, the SPM is given up to 90 days to renegotiate the ESA. Historically, the turn-around time has been much quicker than 90 days. However, purchasers have the option to pursue a waiver to the use of the ESA if the SPM cannot negotiate satisfactory terms and conditions within the purchaser's required timeframe.

Comment: The use of the term ''commercial software or related services such as software maintenance'' is overly broad. The phrase ''related services'' should be deleted. *DoD Response:* The phrase ''related services'' does address a broad range of services. It is the intent of ESI to address software asset management across the spectrum and throughout the life cycle of enterprise software management, rather than limit its scope to software acquisition and software maintenance.

Comment: The term ''software maintenance'' should be defined. *DoD Response:* A definition of ''software maintenance'' has been added at 208.7401.

Comment: Read literally, the rule could require DoD customers to acquire hardware without preloaded software. *DoD Response:* The rule is not intended to preclude the acquisition of preloaded software with computers from the original equipment manufacturer. The language at 208.7400(a) has been revised to clarify the intent.

Comment: The rule appears to support the development of software acquisition processes without the benefit of public comment. This may result in processes inconsistent with Federal Acquisition Streamlining Act requirements pertaining to the acquisition of commercial items. *DoD Response:* DoD policy is to make maximum practical use of GSA Schedules, and ESI has established BPAs against GSA Schedules for DoD use. Software asset management encompasses all aspects of life-cycle management. Should any elements of implementing the software asset management process require public comment, those elements will be published accordingly as has been done for this DFARS rule.

Comment: Software manufacturers and resellers cannot be expected to offer the favorable terms and discounts sought through ESI without DoD's commitment to purchase the quantities that result in the lowest prices. There is no evidence that DoD is willing or is able to make such a commitment. *DoD Response:* Many manufacturers and resellers have offered favorable terms and conditions without a commitment to specific quantities, for a chance at increased market share or additional DoD exposure.

Comment: The acquisition procedures in 208.7403 should be revised for clarity and for consistency with DoD Chief Information Officer Guidance and Policy Memorandum No. 12–8430 dated July 26, 2000, pertaining to requirements for use of ESAs, rationale for use of alternate sources, and reimbursement of funds to the SPM. *DoD Response:* This section has been revised to clarify procedures for determining when use of an ESA is appropriate, and to clarify documentation requirements when use of an alternate source is deemed necessary. However, SPM reimbursement of funds is a procedure handled outside of the contracting arena, and, therefore, is not considered

appropriate for inclusion in this DFARS rule.

This rule was not subject to Office of Management and Budget review under Executive Order 12866, dated September 30, 1993.

B. Regulatory Flexibility Act

DoD certifies that this final rule will not have a significant economic impact on a substantial number of small entities within the meaning of the Regulatory Flexibility Act, 5 U.S.C. 601, *et seq.*, because most enterprise software agreements are blanket purchase agreements established under Federal Supply Schedules. Establishment of such agreements is already permitted by section 8.404(b)(4) of the Federal Acquisition Regulation.

C. Paperwork Reduction Act

The Paperwork Reduction Act does not apply because the rule does not impose any information collection requirements that require the approval of the Office of Management and Budget under 44 U.S.C. 3501, *et seq.*

List of Subjects in 48 CFR Parts 208, 239, 251, and 252

Government procurement.

Michele P. Peterson,

Executive Editor, Defense Acquisition Regulations Council.

Therefore, 48 CFR Parts 208, 239, 251, and 252 are amended as follows:

1. The authority citation for 48 CFR Parts 208, 239, 251, and 252 continues to read as follows:

Authority: 41 U.S.C. 421 and 48 CFR Chapter 1.

PART 208—REQUIRED SOURCES OF SUPPLIES AND SERVICES

2. Section 208.001 is amended by revising paragraph (a)(1)(v) to read as follows:

208.001 Priorities for use of Government supply sources.

(a)(1)(v) *See* Subpart 208.70, Coordinated Acquisition, and Subpart 208.74, Enterprise Software Agreements.

* * * * *

3. Subpart 208.74 is added to read as follows:

Subpart 208.74—Enterprise Software Agreements

Sec.
208.7400 Scope of subpart.
208.7401 Definitions.
208.7402 General.
208.7403 Acquisition procedures.

208.7400 Scope of subpart.

This subpart prescribes policy and procedures for acquisition of commercial software and software maintenance, including software and software maintenance that is acquired—

(a) As part of a system or system upgrade, where practicable;

(b) Under a service contract;

(c) Under a contract or agreement administered by another agency (*e.g.*, under an interagency agreement);

(d) Under a Federal Supply Schedule contract or blanket purchase agreement established in accordance with FAR 8.404(b)(4); or

(e) By a contractor that is authorized to order From a Government supply source pursuant to FAR 51.101.

208.7401 Definitions.

As used in this subpart—

Enterprise software agreement means an agreement or a contract that is used to acquire designated commercial software or related services such as software maintenance.

Enterprise Software Initiative means an initiative led by the DoD Chief Information Officer to develop processes for DoD-wide software asset management.

Golden Disk means a purchased license or entitlement to distribute an unlimited or bulk number of copies of software throughout DoD.

Software maintenance means services normally provided by a software company as standard services at established catalog or market prices, *e.g.*, the right to receive and use upgraded versions of software, updates, and revisions.

Software product manager means the Government official who manages an enterprise software agreement.

208.7402 General.

Departments and agencies shall fulfill requirements for commercial software and related services, such as software maintenance, in accordance with the DoD Enterprise Software Initiative (ESI) (see Web site at *http://www.don-imit.navy.mil/esi).* ESI promotes the use of enterprise software agreements (ESAs) with contractors that allow DoD to obtain favorable terms and pricing for commercial software and related services. ESI does not dictate the products or services to be acquired.

208.7403 Acquisition procedures.

(a) After requirements are determined, the requiring official shall review the information at the ESI website to determine if the required commercial software or related services are available from DoD inventory (*e.g.*, Golden Disks and DoD-wide software maintenance agreements). If the software or services are available, the requiring official shall fulfill the requirement from the DoD inventory.

(b) If the required commercial software or related services are not in the DoD inventory, and not on an ESA, the contracting officer or requiring official may fulfill the requirement by other means. Existing ESAs are listed on the ESI website.

(c) If the commercial software or related services are on an ESA, the contracting officer or requiring official shall review the terms and conditions and prices in accordance with otherwise applicable source selection requirements.

(d) If an ESA's terms and conditions and prices represent the best value to the Government, the contracting officer or requiring official shall fulfill the requirement for software or services through the ESA.

(e) If existing ESAs do not represent the best value to the Government, the software product manager (SPM) shall be given an opportunity to provide the same or a better value to the Government under the ESAs before the contracting officer or requiring official may continue with alternate acquisition methods.

(1) The contracting officer or requiring official shall notify the SPM of specific concerns about existing ESA terms and conditions or prices through the ESI webpage.

(2) The SPM shall consider adjusting, within the scope of the ESA, terms and conditions or prices to provide the best value to the customer.

(i) Within 3 working days, the SPM shall—

(A) Update the ESA;

(B) Provide an estimated date by which the update will be accomplished; or

(C) Inform the contracting officer or requiring official that no change will be made to the ESA.

(ii) If the SPM informs the contracting officer or requiring official that no change will be made to the ESA terms and conditions or prices, the contracting officer or requiring official may fulfill the requirement by other means.

(iii) If the SPM does not respond within 3 working days or does not plan to adjust the ESA within 90 days, the contracting officer or requiring official may fulfill the requirement by other means.

(3) A management official designated by the department or agency may waive the requirement to obtain commercial software or related services through an ESA after the steps in paragraphs (e)(1) and (e)(2)(i) of this section are complete. The rationale for use of an alternate source shall be included in the waiver

request and shall be provided to the SPM.

PART 239—ACQUISITION OF INFORMATION TECHNOLOGY

4. Subpart 239.1 is added to read as follows:

Subpart 239.1—General

Sec.
239.101 Policy.

239.101 Policy.

See Subpart 208.74 when acquiring commercial software or software maintenance.

PART 251—USE OF GOVERNMENT SOURCES BY CONTRACTORS

5. Section 251.102 is amended as follows:

a. By revising paragraph (f);

b. In Table 51–1, by revising paragraph 1.;

c. In Table 51–1, in paragraph 2.b.(1) in the last sentence, and in paragraph 2.b.(2) in the last sentence, by removing ''telefax'' and adding in its place ''facsimile'; and

d. In Table 51–1, by adding paragraph 2.c. to read as follows:

251.102 Authorization to use Government supply sources.

* * * * *

(f) The authorizing agency is also responsible for promptly considering requests of the DoD supply source for authority to refuse to honor requisitions from a contractor that is indebted to DoD and has failed to pay proper invoices in a timely manner.

Table 51–1, Authorization To Purchase From Government Supply Sources

* * * * *

1. You are hereby authorized to use Government sources in performing Contract No. _____ for _____ [insert applicable military department or defense agency], as follows: _____ [Insert applicable purchasing authority given to the contractor.]

2. * * *

c. Enterprise Software Initiative. Place orders in accordance with the terms and conditions of the attached Enterprise Software Agreement(s), or instructions for obtaining commercial software or software maintenance from Enterprise Software Initiative inventories, and this authorization. Attach a copy of this authorization to the order (unless a copy was previously furnished to the Enterprise Software Agreement contractor).

Insert the following statement in the order:

This order is placed under written authorization from _____ dated (*_____). In the event of any inconsistency between the terms and conditions of this order, and those of the Enterprise Software Agreement, the latter will govern.

* * * * *

PART 252—SOLICITATION PROVISIONS AND CONTRACT CLAUSES

6. Section 252.251–7000 is amended as follows:

a. By revising the clause date and paragraph (a);

b. By removing paragraph (b) and redesignating paragraphs (c) through (f) as paragraphs (b) through (e); and

c. In newly designated paragraph (c)(4), in the last sentence, by removing ''Such'' and adding in its place ''The''. The revised text reads as follows:

252.251–7000 Ordering From Government Supply Sources.

* * * * *

Ordering from Government Supply Sources (OCT 2002)

(a) When placing orders under Federal Supply Schedules, Personal Property Rehabilitation Price Schedules, or Enterprise Software Agreements, the Contractor shall follow the terms of the applicable schedule or agreement and authorization. Include in each order:

(1) A copy of the authorization (unless a copy was previously furnished to the Federal Supply Schedule, Personal Property Rehabilitation Price Schedule, or Enterprise Software Agreement contractor).

(2) The following statement: Any price reductions negotiated as part of an Enterprise Software Agreement issued under a Federal Supply Schedule contract shall control. In the event of any other inconsistencies between an Enterprise Software Agreement, established as a Federal Supply Schedule blanket purchase agreement, and the Federal Supply Schedule contract, the latter shall govern.

(3) The completed address(es) to which the Contractor's mail, freight, and billing documents are to be directed.

* * * * *

[FR Doc. 02–27109 Filed 10–24–02; 8:45 am]

BILLING CODE 5001–08–P

DEPARTMENT OF DEFENSE

48 CFR Parts 212, 226, and 237

[DFARS Case 2000–D306]

Defense Federal Acquisition Regulation Supplement; Performance-Based Contracting Using Federal Acquisition Regulation Part 12 Procedures

AGENCY: Department of Defense (DoD).

ACTION: Final rule.

SUMMARY: DoD has issued a final rule amending the Defense Federal Acquisition Regulation Supplement (DFARS) to implement Section 821(b) of the National Defense Authorization Act for Fiscal Year 2001. Section 821(b) permits DoD to treat certain performance-based service contracts and task orders as contracts for the procurement of commercial items.

EFFECTIVE DATE: October 25, 2002.

FOR FURTHER INFORMATION CONTACT: Ms. Sandra Haberlin, Defense Acquisition Regulations Council, OUSD (AT&L) DP (DAR), IMD 3C132, 3062 Defense Pentagon, Washington, DC 20301–3062. Telephone (703) 602–0289; facsimile (703) 602–0350. Please cite DFARS Case 2000–D306.

SUPPLEMENTARY INFORMATION:

A. Background

This rule revises and finalizes the interim rule published at 66 FR 63335 on December 6, 2001. The rule implements Section 821(b) of the National Defense Authorization Act for Fiscal Year 2001 (Public Law 106–398). Section 821(b) permits DoD to use Federal Acquisition Regulation (FAR) Part 12 (Acquisition of Commercial Items) procedures for performance-based service contracts and task orders, if certain conditions are met.

Four respondents submitted comments on the interim rule. A discussion of the comments is provided below:

Comment: The rule appears to contradict the language in FAR Subpart 13.5, which permits the use of simplified procedures for the acquisition of commercial items in amounts exceeding the simplified acquisition threshold but not exceeding $5 million. Section 212.102 of the rule prohibits the use of FAR Subpart 13.5 procedures when using FAR Part 12 for acquisitions that are performance-based.

DoD Response: Do not concur. FAR 12.102 authorizes the use of FAR Part 12 in conjunction with FAR Part 13, 14, or 15, when acquiring supplies or services that meet the definition of commercial

item at FAR 2.101. DFARS 212.102 provides additional authority for use of FAR Part 12 to acquire services that do *not* meet the definition of commercial item, when performance-based contracting methods are used. Therefore, the prohibition against use of FAR Subpart 13.5 in conjunction with FAR Part 12 applies only to performance-based contracts for services that do not meet the definition of commercial item but can be acquired using FAR Part 12 pursuant to the authority in DFARS 212.102.

Comment: The statement in 212.102(a)(i) specifying that the rule applies to contracts or task orders ''. . . entered into on or before October 30, 2003'' should be changed to apply to contracts or task orders ''. . . entered into after October 30, 2000, but before October 30, 2003.'' The statute became effective on October 30, 2000, and this new authority is not available to task orders that were awarded prior to that date, but would be applicable to task orders awarded after that date even though the contract was awarded before October 30, 2000. *DoD Response:* Do not concur. The interim rule became effective on December 6, 2001. Since this date is in the past, there is no need to include it in the DFARS text. In addition, the rule, as written, does not preclude application to task orders issued under contracts that were awarded before the rule became effective.

Comment: The statement in 212.102(a)(i) that requires the use of quality assurance surveillance plans should be deleted from the rule. While such plans are a common best practice for performance-based contracts, this requirement is not part of the statute and, therefore, is not ''in accordance with the Act.'' *DoD Response:* Do not concur. While quality assurance surveillance plans are not specifically addressed in the statute, this requirement should be retained, because the plans are an element of performance-based contracting. See FAR Subpart 37.6, which establishes quality assurance as a component of performance-based contracting.

Comment: The statement in 212.102(a)(i) that permits application of the rule if award is made ''to an entity that provides similar services at the same time to the general public under terms and conditions similar to those in the contract'' should be changed to add, at the end, the phrase ''or task order.'' Under the law, it is clear that the two similarity tests are appropriately applied at either the contract level or at the task order level. *DoD Response:* Concur. The statement has been amended to add the phrase ''or task order.''

Comment: The cross-reference text at 237.601 should be changed from ''See 212.102 for the use of FAR Part 12 procedures with performance-based contracting'' to ''See 212.102 for additional authority and specific conditions where it is appropriate to use FAR Part 12 procedures with performance-based contracting.'' This change is necessary to avoid any misconception that DFARS 212.102 contains the *only* provisions for use of FAR Part 12 for performance-based contracts. Public Law 106–398 clearly established these conditions as an additional incentive for use of the performance-based service contract under FAR Part 12. *DoD Response:* Do not concur. The change is not necessary, as the DFARS does not indicate such a limitation.

Comment: The text at 212.102(a)(ii) should be changed from ''* * * modify paragraph (a) of the clause at FAR 52.212–4 * * *'' to ''* * * tailor paragraph (a) of the clause at FAR 52.212–4* * *'' *DoD Response:* Concur. The word ''tailor'' is consistent with the terminology used in FAR Part 12. This change has been made in the final rule.

Comment: The statement in 212.102(a)(i) that permits application of the rule if award is made ''to an entity that provides similar services at the same time to the general public * * *'' may exclude some small businesses, including 8(a) and native-owned firms, that focus their efforts on Government contracts. *DoD Response:* Partially concur. Firms that direct their efforts exclusively toward providing services to the Government will not meet this condition of the rule. However, this condition was established by Section 821(b) of Public Law 106–398 and cannot be deleted.

Comment: The rule reclassifies all service contracts of less than $5 million as subject to FAR Part 12 procedures. DFARS 226.104(1) precludes use of the clause at 252.226–7001, Utilization of Indian Organizations and Indian-Owned Economic Enterprises—DoD Contracts, in any contract that uses FAR Part 12 procedures. Therefore, this rule eliminates all service contracts of less than $5 million from the Indian Incentive Program, thereby causing significant harm to Native American service companies and Indian Tribal Corporations. DoD should remove the Part 12 exclusion from the clause prescription at DFARS 226.104(1). *DoD Response:* Partially concur. DoD does not agree that the rule reclassifies all service contracts of less than $5 million as subject to FAR Part 12. The rule is limited to performance-based contracting for services that meet specific criteria. DoD does agree that, as the interim rule was written, the Indian Incentive Program could not be used for any performance-based service contracts awarded using FAR Part 12 procedures. The FAR Part 12 exclusion at DFARS 226.104 was established prior to this rule and was intended to apply to the acquisition of supplies and services that meet the definition of commercial item at FAR 2.101. Since this rule permits the use of FAR Part 12 procedures for acquisition of services that do not meet the definition of commercial item, DFARS 226.104 has been amended to clarify that there is no restriction on use of the clause at 252.226–7001 in performance-based contracts for services that either are not commercial items, or are treated as commercial items solely as a result of the authority in 212.102.

This rule was not subject to Office of Management and Budget review under Executive Order 12866, dated September 30, 1993.

B. Regulatory Flexibility Act

DoD certifies that this final rule will not have a significant economic impact on a substantial number of small entities within the meaning of the Regulatory Flexibility Act, 5 U.S.C. 601, *et seq.* The rule permits the use of FAR Part 12 procedures for the award of certain performance-based service contracts and task orders. While the use of FAR Part 12 procedures will improve the efficiency of contracting for these services, the economic impact on small entities will not be substantial.

C. Paperwork Reduction Act

The Paperwork Reduction Act does not apply because the rule does not impose any information collection requirements that require the approval of the Office of Management and Budget under 44 U.S.C. 3501, *et seq.*

List of Subjects in 48 CFR Parts 212, 226, and 237

Government procurement.

Michele P. Peterson,

Executive Editor, Defense Acquisition Regulations Council.

Interim Rule Adopted as Final With Changes

Accordingly, the interim rule amending 48 CFR Parts 212 and 237, which was published at 66 FR 63335 on December 6, 2001, is adopted as a final rule with the following changes:

1. The authority citation for 48 CFR Parts 212, 226, and 237 continues to read as follows:

Authority: 41 U.S.C. 421 and 48 CFR Chapter 1.

PART 212—ACQUISITION OF COMMERCIAL ITEMS

2. Section 212.102 is revised to read as follows:

212.102 Applicability.

(a)(i) In accordance with Section 821 of the National Defense Authorization Act for Fiscal Year 2001 (Pub. L. 106–398), the contracting officer also may use FAR Part 12 for any performance-based contracting for services if the contract or task order—

(A) Is not awarded using the procedures in FAR Subpart 13.5;

(B) Is entered into on or before October 30, 2003;

(C) Has a value of $5 million or less;

(D) Meets the definition of performance-based contracting at FAR 2.101;

(E) Uses quality assurance surveillance plans;

(F) Includes performance incentives where appropriate;

(G) Specifies a firm-fixed price; and

(H) Is awarded to an entity that provides similar services at the same time to the general public under terms and conditions similar to those in the contract or task order.

(ii) In exercising the authority specified in paragraph (a)(i) of this section, the contracting officer should tailor paragraph (a) of the clause at FAR 52.212–4 as may be necessary to ensure the contract's remedies adequately protect the Government's interests.

PART 226—OTHER SOCIOECONOMIC PROGRAMS

3. Section 226.104 is revised to read as follows:

226.104 Contract clause.

Use the clause at 252.226–7001, Utilization of Indian Organizations and Indian-Owned Economic Enterprises—DoD Contracts, in solicitations and contracts for supplies or services that—

(1)(i) Are other than commercial items; or

(ii) Qualify to use FAR Part 12 procedures solely through the authority in 212.102; and

(2) Are expected to exceed the simplified acquisition threshold.

[FR Doc. 02–27108 Filed 10–24–02; 8:45 am]

BILLING CODE 5001–08–P

DEPARTMENT OF DEFENSE

48 CFR Part 252

[DFARS Case 2002–D028]

Defense Federal Acquisition Regulation Supplement; Caribbean Basin Country—Honduras

AGENCY: Department of Defense (DoD).

ACTION: Final rule.

SUMMARY: DoD has issued a final rule amending the Defense Federal Acquisition Regulation Supplement (DFARS) to add Honduras to the list of Caribbean Basin countries whose products DoD may acquire under the Trade Agreements Act, in accordance with a determination of the United States Trade Representative.

EFFECTIVE DATE: October 25, 2002.

FOR FURTHER INFORMATION CONTACT: Ms. Amy Williams, Defense Acquisition Regulations Council, OUSD(AT&L)DP(DAR), IMD 3C132, 3062 Defense Pentagon, Washington, DC 20301–3062. Telephone (703) 602–0328; facsimile (703) 602–0350. Please cite DFARS Case 2002–D028.

SUPPLEMENTARY INFORMATION:

A. Background

This final rule amends the clauses at DFARS 252.225–7007, Buy American Act-Trade Agreements—Balance of Payments Program, and 252.225–7021, Trade Agreements, to add Honduras to the definition of ''Caribbean Basin country.'' The rule implements the direction of the United States Trade Representative to treat the products of Honduras as eligible products in acquisitions subject to the Trade Agreements Act (67 FR 46239, July 12, 2002).

This rule was not subject to Office of Management and Budget review under Executive Order 12866, dated September 30, 1993.

B. Regulatory Flexibility Act

This rule will not have a significant cost or administrative impact on contractors or offerors, or a significant effect beyond the internal operating procedures of DoD. Therefore, publication for public comment is not required. However, DoD will consider comments from small entities concerning the affected DFARS subpart in accordance with 5 U.S.C. 610. Such comments should cite DFARS Case 2002–D028.

C. Paperwork Reduction Act

The Paperwork Reduction Act does not apply because the rule does not impose any information collection requirements that require the approval of the Office of Management and Budget under 44 U.S.C. 3501, *et seq.*

List of Subjects in 48 CFR Part 252

Government procurement.

Michele P. Peterson,

Executive Editor, Defense Acquisition Regulations Council.

Therefore, 48 CFR Part 252 is amended as follows:

1. The authority citation for 48 CFR part 252 continues to read as follows:

Authority: 41 U.S.C. 421 and 48 CFR Chapter 1.

PART 252—SOLICITATION PROVISIONS AND CONTRACT CLAUSES

252.225–7007 [Amended]

2. Section 252.225–7007 is amended as follows:

a. By revising the clause date to read ''(OCT 2002)''; and

b. In paragraph (a)(1) by adding, in alphabetical order, ''Honduras'' to the list of countries.

252.225–7021 [Amended]

3. Section 252.225–7021 is amended as follows:

a. By revising the clause date to read ''(OCT 2002)''; and

b. In paragraph (a)(1) by adding, in alphabetical order, ''Honduras'' to the list of countries.

[FR Doc. 02–27105 Filed 10–24–02; 8:45 am]

BILLING CODE 5001–08–P

DEPARTMENT OF COMMERCE

National Oceanic and Atmospheric Administration

50 CFR Part 660

[Docket No. 020430101–2101–01; I.D. 101102F]

Fisheries Off West Coast States and in the Western Pacific; West Coast Salmon Fisheries; Inseason Action 16--Adjustment of the Commercial Fishery from the Oregon-California Border to the Humboldt South Jetty

AGENCY: National Marine Fisheries Service (NMFS), National Oceanic and Atmospheric Administration (NOAA), Commerce.

ACTION: Inseason adjustment; request for comments.

SUMMARY: NMFS announces that the commercial salmon fishery in the area from the Oregon-California Border to the Humboldt South Jetty, was modified to

close at midnight on Friday, September 20, 2002, and then reopen Thursday, September 26, 2002, through midnight on Friday, September 27, 2002. On September 19, 2002, the Northwest Regional Administrator, NMFS (Regional Administrator), determined that available catch and effort data indicated that the quota of 10,000 chinook salmon would be reached by September 20, 2002. However, after reevaluating the available catch and effort data on September 24, 2002, it was found that there was enough salmon left in the chinook quota to allow an additional 2 days of fishing. These actions were necessary to conform to the 2002 management goals.

DATES: Closure in the area from the Oregon-California Border to the Humboldt South Jetty effective 2359 hours local time (l.t.), September 20, 2002;

Reopening in the area from the Oregon-California Border to the Humboldt South Jetty effective 0001 hours l.t., September 26, 2002, through 2359 hours l.t., September 27, 2002, after which the fishery will remain closed until opened through an additional inseason action, which will be published in the **Federal Register** for the west coast salmon fisheries, or until the effective date of the year 2003 management measures.

Comments will be accepted through November 12, 2002.

ADDRESSES: Comments on this action must be mailed to D. Robert Lohn, Regional Administrator, Northwest Region, NMFS, NOAA, 7600 Sand Point Way N.E., Bldg. 1, Seattle, WA 98115–0070; or faxed to 206–526–6376; or Rod McInnis, Acting Regional Administrator, Southwest Region, NMFS, NOAA, 501 W. Ocean Blvd., Suite 4200, Long Beach, CA 90802–4132; or faxed to 562–980–4018. Comments will not be accepted if submitted via e-mail or the Internet. Information relevant to this document is available for public review during business hours at the Office of the Regional Administrator, Northwest Region, NMFS.

FOR FURTHER INFORMATION CONTACT: Christopher Wright, 206–526–6140.

SUPPLEMENTARY INFORMATION: The Regional Administrator modified the season for the commercial salmon fishery in the area from the Oregon-California Border to the Humboldt South Jetty, to close at midnight on Friday, September 20, 2002, and then reopen Thursday, September 26, 2002, through midnight on Friday, September 27, 2002. On September 19, 2002, the Northwest Regional Administrator, NMFS (Regional Administrator), determined that available catch and effort data indicated that the quota of 10,000 chinook salmon would be reached by September 20, 2002. However, after reevaluating the available catch and effort data on September 24, 2002, it was found that there was enough salmon left in the chinook quota to allow an additional 2 days of fishing. Automatic season closures based on quotas are authorized by regulations at 50 CFR 660.409(a)(1), and modification of fishing seasons is authorized by regulations at 50 CFR 660.409(b)(1)(i).

In the 2002 annual management measures for ocean salmon fisheries (67 FR 30616, May 7, 2002), NMFS announced the commercial fishery for all salmon except coho in the area from the Oregon-California Border to the Humboldt South Jetty would open August 16, 2002, through the earlier of August 30, 2002, or an 3,000–chinook quota, and September 1, 2002, through the earlier of September 30, 2002, or a 10,000–chinook quota. The area also had a possession and landing limit of 40 fish per day, with all fish required to be landed within the area and within 24 hours of any closure of the fishery.

On September 19, 2002, the Regional Administrator consulted with representatives of the Pacific Fishery Management Council (Council) and the California Department Fish and Game (CDFG) by conference call. Information related to catch to date, the chinook catch rate, and effort data indicated that it was likely that the chinook quota would be reached by Friday, September 20, 2002. As a result, the State of California recommended, and the Regional Administrator concurred, that the area from the Oregon-California Border to the Humboldt South Jetty close effective at midnight on Friday, September 20, 2002. All other restrictions that apply to this fishery remained in effect as announced in the 2002 annual management measures. In addition, the parties agreed to reevaluate the fishery the following week and assess the possibility of further open fishing periods if the catch estimates turned out to be low.

On September 24, 2002, the Regional Administrator again consulted with representatives of the Council and the CDFG by conference call. Information related to catch to date, the chinook catch rate, and effort data indicated that there was enough chinook left in the quota to allow 2 more days of fishing. As a result, the State of California recommended, and the Regional Administrator concurred, that the commercial salmon fishery in the area from the Oregon-California Border to the Humboldt South Jetty should be modified to reopen Thursday, September 26, 2002, through midnight on Friday, September 27, 2002, to access the available chinook left in the quota. In addition, the landing restriction language was modified to a possession and landing limit of 40 fish per day, with no vessel landing or delivering more than 80 chinook for the entire 2 day open period, all fish required to be landed within the area and within 24 hours of the fishery closure. Additionally, salmon caught outside the open area were not allowed to be landed in the area until after midnight on Saturday, September 28, 2002. This final modification was needed to clarify the intent of the landing restriction and minimize complications related to catch accounting that may result from landing salmon from outside the catch area. All other restrictions that applied to this fishery remained in effect as announced in the 2002 annual management measures and subsequent inseason actions.

The Regional Administrator determined that the best available information indicated that the catch and effort data, and projections, supported the above inseason actions recommended by the States. The States manage the fisheries in State waters adjacent to the areas of the U.S. exclusive economic zone in accordance with this Federal action. As provided by the inseason notice procedures of 50 CFR 660.411 (a)(2), actual notice to fishers of the above described actions were given prior to the effective dates by telephone hotline number 206–526–6667 and 800–662–9825, and by U.S. Coast Guard Notice to Mariners broadcasts on Channel 16 VHF-FM and 2182 kHz.

These actions do not apply to other fisheries that may be operating in other areas.

Classification

The Assistant Administrator for Fisheries, NOAA (AA), finds that good cause exists for this notification to be issued without affording prior notice and opportunity for public comment under 5 U.S.C. 553(b)(B), or delaying the effectiveness of this rule for 30 days under 5 U.S.C. 553(d)(3), because such notification and delay is impracticable and contrary to the public interest. As previously noted, actual notice of these actions was provided to fishers through telephone hotline and radio notification. These actions comply with the requirements of the annual management measures for ocean salmon fisheries (67 FR 30616, May 7, 2002) and the West

Coast Salmon Plan. Prior notice and opportunity for public comment is impracticable because NMFS and the State agencies have insufficient time to provide for prior notice and the opportunity for public comment between the time the fishery catch and effort data are collected to determine the extent of the fisheries, and the time the limits to which the fishery must be in place. Moreover, such prior notice and the opportunity for public comment is contrary to the public interest because it does not allow fishers appropriately controlled access to the available fish at the time they are available.

The AA finds good cause to waive the 30–day delay in effectiveness required under 5 U.S.C. 553(d)(3). A delay in effectiveness of this action would not allow fishers appropriately controlled access to the available fish at the time they are available.

This action is authorized by 50 CFR 660.409 and 660.411 and is exempt from review under Executive Order 12866.

Authority: Authority: 16 U.S.C. 1801 *et seq.*

Dated: October 21, 2002.

Bruce C. Morehead,

Acting Director, Office of Sustainable Fisheries, National Marine Fisheries Service.

[FR Doc. 02–27262 Filed 10–24–02; 8:45 am]

BILLING CODE 3510–22–S

Proposed Rules

Federal Register
Vol. 67, No. 207
Friday, October 25, 2002

This section of the FEDERAL REGISTER contains notices to the public of the proposed issuance of rules and regulations. The purpose of these notices is to give interested persons an opportunity to participate in the rule making prior to the adoption of the final rules.

DEPARTMENT OF TRANSPORTATION

Federal Aviation Administration

14 CFR Part 39

[Docket No. 2002–CE–38–AD]

RIN 2120–AA64

Airworthiness Directives; Brackett Aircraft Company, Brackett Single Screen Air Filter

AGENCY: Federal Aviation Administration, DOT.

ACTION: Notice of proposed rulemaking (NPRM).

SUMMARY: This document proposes to adopt a new airworthiness directive (AD) that would apply to Brackett Aircraft Company (Brackett) single screen air filter assemblies that are installed on airplanes. This proposed AD would require you to check the Brackett single screen air filter assembly for correct installation. This proposed AD would also require you to install an additional screen, replace the Brackett single screen air filter assembly with a double screen filter, or replace with another approved design filter at a specified time. This proposed AD is the result of several reports of service difficulties of incorrect installation of the air filters. The actions specified by this proposed AD are intended to detect and correct incorrect installation of the air filter, which could result in failure of the air filter. Such failure could lead to engine/turbocharger ingestion of the air filter foam element.

DATES: The Federal Aviation Administration (FAA) must receive any comments on this proposed rule on or before November 26, 2002.

ADDRESSES: Submit comments to FAA, Central Region, Office of the Regional Counsel, Attention: Rules Docket No. 2002–CE–38–AD, 901 Locust, Room 506, Kansas City, Missouri 64106. You may view any comments at this location between 8 a.m. and 4 p.m., Monday through Friday, except Federal holidays. You may also send comments electronically to the following address: *9-ACE-7-Docket@faa.gov.* Comments sent electronically must contain ''Docket No. 2002–CE–38–AD'' in the subject line. If you send comments electronically as attached electronic files, the files must be formatted in Microsoft Word 97 for Windows or ASCII text.

You may get service information that applies to this proposed AD from Brackett Aircraft Company, 7052 Government Way, Kingman, Arizona 86401; telephone: (928) 757–4009; facsimile: (928) 757–4433. You may also view this information at the Rules Docket at the address above.

FOR FURTHER INFORMATION CONTACT: Roger Pesuit, Aerospace Engineer, FAA, Los Angeles Aircraft Certification Office, 3960 Paramount Boulevard; telephone: (562) 627–5251; facsimile: (562) 627–5210.

SUPPLEMENTARY INFORMATION:

Comments Invited

How Do I Comment on This Proposed AD?

The FAA invites comments on this proposed rule. You may submit whatever written data, views, or arguments you choose. You need to include the rule's docket number and submit your comments to the address specified under the caption **ADDRESSES.** We will consider all comments received on or before the closing date. We may amend this proposed rule in light of comments received. Factual information that supports your ideas and suggestions is extremely helpful in evaluating the effectiveness of this proposed AD action and determining whether we need to take additional rulemaking action.

Are There Any Specific Portions of This Proposed AD I Should Pay Attention to?

The FAA specifically invites comments on the overall regulatory, economic, environmental, and energy aspects of this proposed rule that might suggest a need to modify the rule. You may view all comments we receive before and after the closing date of the rule in the Rules Docket. We will file a report in the Rules Docket that summarizes each contact we have with the public that concerns the substantive parts of this proposed AD.

How Can I Be Sure FAA Receives My Comment?

If you want FAA to acknowledge the receipt of your mailed comments, you must include a self-addressed, stamped postcard. On the postcard, write ''Comments to Docket No. 2002–CE–38–AD.'' We will date stamp and mail the postcard back to you.

Discussion

What Events Have Caused This Proposed AD?

The FAA has received several reports of service difficulties of incorrect installation of the Brackett single screen air filters on Cessna 206 and 210 series airplanes that incorporate Supplemental Type Certificate (STC) No. SA71GL. A safety recommendation was issued by FAA that recommended corrective action as a result of a fatal accident involving a Cessna Model T210N airplane.

Investigation of this accident revealed that the air filter assembly had been installed with the screen incorrectly positioned on the upstream side of the frame. Incorrect installation of the air filter assembly resulted in portions of the air filter foam element entering the turbocharger compressor inlet.

We determined this to be the cause of the reported power loss. The manufacturer has developed a double screen air filter that precludes incorrect air filter installation.

What Are the Consequences if the Condition Is Not Corrected?

If not detected and corrected, the air filter foam element could be ingested into the engine/turbocharger compressor. This condition could lead to loss of power during a critical phase of flight.

The FAA's Determination and an Explanation of the Provisions of This Proposed AD

What Has FAA Decided?

After examining the circumstances and reviewing all available information related to the incidents described above, we have determined that:

—The unsafe condition referenced in this document exists or could develop on type design aircraft that incorporate a Brackett single screen air filter assembly;

—The Brackett single screen air filter assemblies should be immediately inspected for correct installation and eventually replaced; and
—AD action should be taken in order to correct this unsafe condition.

What Would This Proposed AD Require?

This proposed AD would require you to visually or by touch check the Brackett single screen air filter assembly for correct installation. This proposed AD would also require you to add a second screen, replace the Brackett single screen air filter with a double screen filter, or replace with another approved design filter at a specified time.

Cost Impact

How Many Airplanes Would This Proposed AD Impact?

We estimate that this proposed AD affects 2,000 airplanes in the U.S. registry.

What Would Be the Cost Impact of This Proposed AD on Owners/Operators of the Affected Airplanes?

We estimate the following costs to accomplish the proposed replacements:

Labor cost	Parts cost	Total cost per airplane	Total cost on U.S. operators
1 workhour × $60 = $60	$44	$104	$104 × 2,000 = $208,000

Regulatory Impact

Would This Proposed AD Impact Various Entities?

The regulations proposed herein would not have a substantial direct effect on the States, on the relationship between the national government and the States, or on the distribution of power and responsibilities among the various levels of government. Therefore, it is determined that this proposed rule would not have federalism implications under Executive Order 13132.

Would This Proposed AD Involve a Significant Rule or Regulatory Action?

For the reasons discussed above, I certify that this proposed action (1) is not a ''significant regulatory action'' under Executive Order 12866; (2) is not a ''significant rule'' under DOT Regulatory Policies and Procedures (44 FR 11034, February 26, 1979); and (3) if promulgated, will not have a significant economic impact, positive or negative, on a substantial number of small entities under the criteria of the Regulatory Flexibility Act. A copy of the draft regulatory evaluation prepared for this action has been placed in the Rules Docket. A copy of it may be obtained by contacting the Rules Docket at the location provided under the caption **ADDRESSES.**

List of Subjects in 14 CFR Part 39

Air transportation, Aircraft, Aviation safety, Safety.

The Proposed Amendment

Accordingly, under the authority delegated to me by the Administrator, the Federal Aviation Administration proposes to amend part 39 of the Federal Aviation Regulations (14 CFR part 39) as follows:

PART 39—AIRWORTHINESS DIRECTIVES

1. The authority citation for part 39 continues to read as follows:

Authority: 49 U.S.C. 106(g), 40113, 44701.

§ 39.13 [Amended]

2. FAA amends § 39.13 by adding a new airworthiness directive (AD) to read as follows:

Brackett Aircraft Company: Docket No. 2002–CE–38–AD.

(a) *What airplanes are affected by this AD?* This AD affects Brackett single screen air filter assemblies, part number BA–2410, that are installed on, but not limited to, the following aircraft that are certificated in any category and incorporate Supplemental Type Certificate (STC) No. SA71GL:

Cessna model	Serial Nos.
TP206A, TP206B, TP206C, TP206D, TP206E, TU206A, TU206B, TU206C, TU206D, TU206E, TU206F, TU206G and T207A.	All serial numbers.
210	All equipped with air conditioning.
T210F, T210G, T210H, T210J, T210K, T210L, T210M, T210N, 210R, and T210R	All serial numbers.

(b) *Who must comply with this AD?* Anyone who wishes to operate an aircraft equipped with one of the affected single screen air filters must comply with this AD.

(c) *What problem does this AD address?* The actions specified by this AD are intended to detect and correct incorrect installation of the air filter, which could result in failure of the air filter. Such failure could lead to engine/turbocharger ingestion of the air filter foam element.

(d) *What actions must I accomplish to address this problem?* To address this problem, you must accomplish the following:

Actions	Compliance	Procedures
(1) Visually or by touch check the single screen Brackett air filter assembly (part number (P/N) BA–2410) to ensure that it is installed with the screen on the down stream side of the filter assembly. Accomplish the following: (i) Remove both upper engine cowlings. (ii) Open the alternate air access door located on the right side of the engine compartment by applying pressure. (iii) While viewing through the alternate air access door, use an inspection mirror and light to check that the screen is installed on the down stream side of the filter assembly; OR (iv) Partially insert a hand into the open alternate air access door and touch the back of the filter element, feeling for the presence of the screen or absence of the screen.	Within the next 25 hours time in service (TIS) after the effective date of this AD	The owner/operator holding at least a private pilot certificate as authorized by section 43.7 of the Federal Aviation Regulations (14 CFR 43.7) may accomplish the visual or touch check of this AD. Make an entry into the aircraft records showing compliance with these portions of the AD in accordance with section 43.9 of the Federal Aviation Regulations (14 CFR 43.9).
(2) Verify that the BA–2410 air filter assembly has screens on both sides. Install an additional screen P/N 2404–00 on the BA–2410 air filter assembly if it is not already equipped with screens on both sides. Alternatively, replace the single screen Bracket air filter assembly, P/N BA–2410, with an FAA-approved filter that is not Brackett P/N BA–2410	*If the air filter assembly is installed incorrectly:* Prior to further flight after the visual or by touch check required by paragraph (d)(1) of this AD. *If the air filter is installed correctly:* Within the next 100 hours TIS after the effective date of this AD	In accordance with the applicable airplane maintenance instructions. The owner/operator may not accomplish the replacement/modification, unless he/she holds the proper mechanic authorization.
(3) You may accomplish the replacement required by this AD instead of the check specified in paragraph (d)(1) of this AD	Within the next 25 hours TIS after the effective date of this AD	In accordance with the applicable airplane or STC supplied maintenance instructions.
(4) Do not install, on any affected airplane, any single screen Brackett air filter assembly, P/N BA–2410	As of the effective date of this AD	Not applicable.

Note 1: Corrective action, if required, must be accomplished by appropriately rated maintenance personnel. The owner/operator may not accomplish the replacement/modification, unless he/she holds the proper mechanic authorization.

Note 2: The compliance time of 100 hours TIS for replacement is based on FAA Safety Recommendation, Control Number 02.122, that recommends modifying to a dual screen configuration at 100 hours TIS.

(e) *Can I comply with this AD in any other way?* You may use an alternative method of compliance or adjust the compliance time if:

(1) Your alternative method of compliance provides an equivalent level of safety; and

(2) The Manager, Los Angeles Aircraft Certification Office (ACO), approves your alternative. Submit your request through an FAA Principal Maintenance Inspector, who may add comments and then send it to the Manager, Los Angeles ACO.

Note 3: This AD applies to each airplane identified in paragraph (a) of this AD, regardless of whether it has been modified, altered, or repaired in the area subject to the requirements of this AD. For airplanes that have been modified, altered, or repaired so that the performance of the requirements of this AD is affected, the owner/operator must request approval for an alternative method of compliance in accordance with paragraph (e) of this AD. The request should include an assessment of the effect of the modification, alteration, or repair on the unsafe condition addressed by this AD; and, if you have not eliminated the unsafe condition, specific actions you propose to address it.

(f) *Where can I get information about any already-approved alternative methods of compliance?* Contact Roger Pesuit, Aerospace Engineer, FAA, Los Angeles Aircraft Certification Office, 3960 Paramount Boulevard; telephone: (562) 627–5251; facsimile: (562) 627–5210.

(g) *What if I need to fly the airplane to another location to comply with this AD?* The FAA can issue a special flight permit under sections 21.197 and 21.199 of the Federal Aviation Regulations (14 CFR 21.197 and 21.199) to operate your airplane to a location where you can accomplish the requirements of this AD.

(h) *How do I get copies of the documents referenced in this AD?* You may get copies of the documents referenced in this AD from Brackett Aircraft Company, 7052 Government Way, Kingman, Arizona 86401; telephone: (928) 757–4009; facsimile: (928) 757–4433. You may view these documents at FAA, Central Region, Office of the Regional Counsel, 901 Locust, Room 506, Kansas City, Missouri 64106.

Issued in Kansas City, Missouri, on October 18, 2002.

Michael Gallagher,

Manager, Small Airplane Directorate, Aircraft Certification Service.

[FR Doc. 02–27197 Filed 10–24–02; 8:45 am]

BILLING CODE 4910–13–P

DEPARTMENT OF TRANSPORTATION

Federal Aviation Administration

14 CFR Part 39

[Docket No. 2002–CE–32–AD]

RIN 2120–AA64

Airworthiness Directives; Raytheon Aircraft Company Model 1900D Airplanes

AGENCY: Federal Aviation Administration, DOT.

ACTION: Notice of proposed rulemaking (NPRM).

SUMMARY: This document proposes to adopt a new airworthiness directive (AD) that would apply to certain Raytheon Aircraft Company (Raytheon) Model 1900D airplanes. This proposed AD would require you to inspect the

alternating current (AC) inverter and modify the AC inverter and inverter sync wire shield. This proposed AD is the result of reports that electrical noise causes the inverter to shut down in flight with loss of AC-powered flight instruments. The actions specified by this proposed AD are intended to prevent electrical noise causing the inverter to shut down, which could result in failure of key aircraft electrical systems. Such failure could lead to loss of flight instruments during flight.

DATES: The Federal Aviation Administration (FAA) must receive any comments on this proposed rule on or before January 2, 2003.

ADDRESSES: Submit comments to FAA, Central Region, Office of the Regional Counsel, Attention: Rules Docket No. 2002–CE–32–AD, 901 Locust, Room 506, Kansas City, Missouri 64106. You may view any comments at this location between 8 a.m. and 4 p.m., Monday through Friday, except Federal holidays. You may also send comments electronically to the following address: *9-ACE–7-Docket@faa.gov.* Comments sent electronically must contain ''Docket No. 2002–CE–32–AD'' in the subject line. If you send comments electronically as attached electronic files, the files must be formatted in Microsoft Word 97 for Windows or ASCII text.

You may get service information that applies to this proposed AD from Raytheon Aircraft Company, 9709 E. Central, Wichita, Kansas 67201–0085; telephone: (800) 429–5372 or (316) 676–3140. You may also view this information at the Rules Docket at the address above.

FOR FURTHER INFORMATION CONTACT: Todd Dixon, Aerospace Engineer, FAA, Wichita Aircraft Certification Office (ACO), 1801 Airport Road, Room 100, Wichita, Kansas 67209; telephone: (316) 946–4152; facsimile: (316) 946–4407.

SUPPLEMENTARY INFORMATION:

Comments Invited

How Do I Comment on This Proposed AD?

The FAA invites comments on this proposed rule. You may submit whatever written data, views, or arguments you choose. You need to include the rule's docket number and submit your comments to the address specified under the caption **ADDRESSES.** We will consider all comments received on or before the closing date. We may amend this proposed rule in light of comments received. Factual information that supports your ideas and suggestions is extremely helpful in evaluating the effectiveness of this proposed AD action and determining whether we need to take additional rulemaking action.

Are There Any Specific Portions of This Proposed AD I Should Pay Attention To?

The FAA specifically invites comments on the overall regulatory, economic, environmental, and energy aspects of this proposed rule that might suggest a need to modify the rule. You may view all comments we receive before and after the closing date of the rule in the Rules Docket. We will file a report in the Rules Docket that summarizes each contact we have with the public that concerns the substantive parts of this proposed AD.

How Can I Be Sure FAA Receives My Comment?

If you want FAA to acknowledge the receipt of your mailed comments, you must include a self-addressed, stamped postcard. On the postcard, write ''Comments to Docket No. 2002–CE–32–AD.'' We will date stamp and mail the postcard back to you.

Discussion

What Events Have Caused This Proposed AD?

The FAA has received nine reports of electrical noise causing the alternating current (AC) inverter to shut down on certain airplanes. These airplanes are equipped with KGS Electronics AC Inverter part number (P/N) SPC–10(PW), Mod 2, serial numbers 306 to 803. The shut down of the inverter resulted in the loss of the electronic flight information system (EFIS), Radio Magnetic Indicator (RMI), and related AC-powered systems. Some airplanes experienced the loss of engine torque indication.

What Are the Consequences if the Condition Is Not Corrected?

Such failure of the inverter could lead to loss of flight instruments during a critical phase of flight.

Is There Service Information That Applies to This Subject?

Raytheon has issued Mandatory Service Bulletin SB 24–3215, Rev. 1, issued February 1999, revised June 2001.

What Are the Provisions of This Service Information?

The service bulletin includes procedures for:

—AC inverter inspection;

—AC inverter modification; and

—AC inverter sync wire shield modification.

The FAA's Determination and an Explanation of the Provisions of This Proposed AD

What Has FAA Decided?

After examining the circumstances and reviewing all available information related to the incidents described above, we have determined that:

—The unsafe condition referenced in this document exists or could develop on other Raytheon Model 1900D airplanes of the same type design;

—The actions specified in the previously-referenced service information should be accomplished on the affected airplanes; and

—AD action should be taken in order to correct this unsafe condition.

What Would This Proposed AD Require?

This proposed AD would require you to incorporate the actions in the previously-referenced service bulletin.

Cost Impact

How Many Airplanes Would This Proposed AD Impact?

We estimate that this proposed AD affects 232 airplanes in the U.S. registry.

What Would Be the Cost Impact of This Proposed AD on Owners/Operators of the Affected Airplanes?

We estimate the following costs to accomplish the proposed AC inverter inspection:

Labor cost	Parts cost	Total cost per airplane	Total cost on U.S. operators
2 workhours × $60 = $120 for each inverter	No cost for parts	$240	232 × $240 = $55,680.

We estimate the following costs to accomplish any necessary AC inverter modification that would be required based on the results of the proposed inspection. We have no way of

determining the number of airplanes that may need such modification:

Labor cost	Parts cost	Total cost per airplane
2 workhours × $60 = $120 for each inverter ($240 per aircraft)	$310	$550 for each airplane.

We estimate the following costs to accomplish any necessary AC inverter sync wire shield modification that would be required based on the results of the proposed inspection. We have no way of determining the number of airplanes that may need such modification:

Labor cost	Parts cost	Total cost per airplane
8 workhours × $60 = $480	$6	$486

Compliance Time of This Proposed AD

What Would Be the Compliance Time of This Proposed AD?

The compliance time of this proposed AD is within 6 months after the effective date of the AD.

Why Is the Proposed Compliance Time Presented in Calendar Time Instead of Hours Time-in-Service (TIS)?

Failure of the aircraft AC inverters is only unsafe during airplane operation. However, this unsafe condition is not a result of the number of times the airplane is operated. The chance of this situation occurring is the same for an airplane with 50 hours time-in-service (TIS) as it would be for an airplane with 1,000 hours TIS.

For this reason, the FAA has determined that a compliance based on calendar time should be utilized in this proposed AD in order to assure that the unsafe condition is addressed on all airplanes in a reasonable time period.

Regulatory Impact

Would This Proposed AD Impact Various Entities?

The regulations proposed herein would not have a substantial direct effect on the States, on the relationship between the national government and the States, or on the distribution of power and responsibilities among the various levels of government. Therefore, it is determined that this proposed rule would not have federalism implications under Executive Order 13132.

Would This Proposed AD Involve a Significant Rule or Regulatory Action?

For the reasons discussed above, I certify that this proposed action (1) is not a ''significant regulatory action'' under Executive Order 12866; (2) is not a ''significant rule'' under DOT Regulatory Policies and Procedures (44 FR 11034, February 26, 1979); and (3) if promulgated, will not have a significant economic impact, positive or negative, on a substantial number of small entities under the criteria of the Regulatory Flexibility Act. A copy of the draft regulatory evaluation prepared for this action has been placed in the Rules Docket. A copy of it may be obtained by contacting the Rules Docket at the location provided under the caption **ADDRESSES.**

List of Subjects in 14 CFR Part 39

Air transportation, Aircraft, Aviation safety, Safety.

The Proposed Amendment

Accordingly, under the authority delegated to me by the Administrator, the Federal Aviation Administration proposes to amend part 39 of the Federal Aviation Regulations (14 CFR part 39) as follows:

PART 39—AIRWORTHINESS DIRECTIVES

1. The authority citation for part 39 continues to read as follows:

Authority: 49 U.S.C. 106(g), 40113, 44701.

§ 39.13 [Amended]

2. FAA amends § 39.13 by adding a new airworthiness directive (AD) to read as follows:

Raytheon Aircraft Company: Docket No. 2002–CE–32–AD.

(a) *What airplanes are affected by this AD?* This AD affects the following airplane models and serial numbers that are certificated in any category:

(1) *Group 1 Airplanes:* Model 1900D, serial numbers UE–1 through UE–265.

(2) *Group 2 Airplanes:* Model 1900D, serial numbers UE–266 through UE–388.

(3) *Group 3 Airplanes:* Model 1900D, serial numbers UE–389 through UE–410.

(b) *Who must comply with this AD?* Anyone who wishes to operate any of the airplanes identified in paragraph (a) of this AD must comply with this AD.

(c) *What problem does this AD address?* The actions specified by this AD are intended to prevent electrical noise causing the alternating current (AC) inverter to shut down, which could result in failure of key aircraft electrical systems. Such failure could lead to loss of flight instruments during a critical phase of flight.

Note 1: Refer to paragraph (a) to determine if your airplane is assigned to Group 1, Group 2, or Group 3. If your airplane is assigned to Group 1, Group 2, or Group 3, you only have to accomplish the requirements of either paragraph (d), (e), or (f), respectively.

(d) *What actions must I accomplish to address this problem if I have a Group 1 airplane?* To address this problem, you must accomplish the following:

Actions	Compliance	Procedures
(1) Inspect the AC inverter to determine if the KGS Electronics AC Inverter part number (P/N) SPC–10(PW), with a serial number in the range of 306 through 803, is installed and is identified as Mod 2DD. (i) This may be accomplished by checking the logbook and positively showing that Mod 2DD inverter is installed. A person holding a pilot's certificate may accomplish this check. (ii) If, by checking the airplane logbook or by visual inspection, it can be positively shown that Mod 2DD inverter is installed, then the requirements of paragraph (d)(2) of this AD do not apply. You must make an entry into the aircraft records that shows compliance with this portion of the AD, in accordance with section 43.9 of the Federal Aviation Regulations (14 CFR 43.9).	Within 6 months after the effective date of this AD	In accordance with the ACCOMPLISHMENT INSTRUCTIONS section of Raytheon Aircraft Service Bulletin SB 24–3215, Rev. 1, issued February 1999, revised June 2001.
(2) If during the inspection required in paragraph (d)(1), it is found that the Mod 2DD inverter is not installed, accomplish the AC inverter modification	Before further flight after the paragraph (d)(1) inspection of this AD	In accordance with the ACCOMPLISHMENT INSTRUCTIONS section of Raytheon Aircraft Service Bulletin SB 24–3215, Rev. 1, issued February 1999, revised June 2001, and the Model 1900D Airliner Maintenance Manual.
(3) Inspect the AC inverter to determine if STC #SA00245WI–D is installed. (i) This may be accomplished by checking the logbook and positively showing that STC #SA00245WI–D has never been installed. A person holding a pilot's certificate may accomplish this check. (ii) If, by checking the logbook or visual inspection, it can be positively shown that STC #SA00245WI–D has never been installed, then the requirements of paragraph (d)(4) of this AD do not apply. You must make an entry into the aircraft records that shows compliance with this portion of the AD, in accordance with section 43.9 of the Federal Aviation Regulations (14 CFR 43.9).	Within 6 months after the effective date of this AD	In accordance with the ACCOMPLISHMENT INSTRUCTIONS section of Raytheon Aircraft Service Bulletin SB 24–3215, Rev. 1, issued February 1999, revised June 2001.
(4) If during the inspection required in paragraph (d)(3), STC #SA00245WI–D is found installed, accomplish the AC inverter sync wire shield modification.	Before further flight after the paragraph inspection of this AD	In accordance with the ACCOMPLISHMENT INSTRUCTIONS section of Raytheon Aircraft Service Bulletin SB 24–3215, Rev. 1, issued February 1999, revised June 2001, and the Model 1900D Airliner Maintenance Manual.
(5) Do not install, on any affected airplane, any KGS Electronics AC inverter S/N between 306 through 803 not identified as Mod 2DD	As of the effective date of this AD	Not applicable.
(6) Do not install STC #SA00245WI–D on any airplane unless the AC inverter modification required in paragraph (d)(4) of this AD is accomplished.	As of the effective date of this AD	In accordance with the ACCOMPLISHMENT INSTRUCTIONS section of Raytheon Aircraft Service Bulletin SB 24–3215, Rev. 1, issued February 1999, revised June 2001, and the Model 1900D Airliner Maintenance Manual.

(e) *What actions must I accomplish to address this problem if I have a Group 2 airplane?* To address this problem, you must accomplish the following:

Actions	Compliance	Procedures
(1) Inspect the AC inverter to determine if the KGS Electronics AC Inverter part number (P/N) SPC–10(PW), with a serial number in the range of 306 through 803, is installed and is identified as Mod 2DD. (i) This may be accomplished by checking the logbook and positively showing that Mod 2DD inverter is installed. A person holding a pilot's certificate may accomplish this check. (ii) If, by checking the airplane logbook or visual inspection, it can be positively shown that Mod 2DD inverter is installed, then the requirements of paragraphs (e)(2) of this AD do not apply. You must make an entry into the aircraft records that shows compliance with this portion of the AD, in accordance with section 43.9 of the Federal Aviation Regulations (14 CFR 43.9).	Within 6 months after the effective date of this AD.	In accordance with the ACCOMPLISHMENT INSTRUCTIONS section of Raytheon Aircraft Service Bulletin SB 24–3215, Rev.1, issued February 1999, revised June 2001.

Actions	Compliance	Procedures
(2) If during the inspection required in paragraph (e)(1), Mod 2DD is not installed, accomplish the AC inverter modification.	Before further flight after the paragraph (e)(1) inspection of this AD.	In accordance with the ACCOMPLISHMENT INSTRUCTIONS section of Raytheon Aircraft Service Bulletin SB 24–3215, Rev.1, issued February 1999, revised June 2001, and the Model 1900D Airliner Maintenance Manual.
(3) Accomplish the AC inverter sync wire shield modification.	Within 6 months after the effective date of this AD.	In accordance with the ACCOMPLISHMENT INSTRUCTIONS section of Raytheon Aircraft Service Bulletin SB 24–3215, Rev.1, issued February 1999, revised June 2001, and the Model 1900D Airliner Maintenance Manual.
(4) Do not install, on any affected airplane, any KGS Electronics AC inverter S/N between 306 through 803 not identified as Mod 2DD.	As of the effective date of this AD.	Not applicable.

(f) *What actions must I accomplish to address this problem if I have a Group 3 airplane?* To address this problem, you must accomplish the following:

Actions	Compliance	Procedures
(1) Inspect the AC inverter to determine if the KGS Electronics AC Inverter part number (P/N) SPC–10(PW), with a serial number in the range of 306 through 803, is installed and is identified as Mod 2DD. (i) This may be accomplished by checking the logbook and positively showing that Mod 2DD is installed on the inverter. A person holding a pilot's certificate may accomplish this check. (ii) If, by checking the airplane logbook or visual inspection, it can be positively shown that the Mod 2DD inverter is installed, then the requirements of paragraph (f)(2) of this AD do not apply. You must make an entry into the aircraft records that shows compliance with this portion of the AD, in accordance with section 43.9 of the Federal Aviation Regulations (14 CFR 43.9)	Within 6 months after the effective date of this AD.	In accordance with the ACCOMPLISHMENT INSTRUCTIONS section of Raytheon Aircraft Service Bulletin SB 24–3215, Rev. 1, issued February 1999, revised June 2001.
(2) If during the inspection required in paragraph (f)(1), it is found that the Mod 2DD inverter is not installed, accomplish the AC inverter modification.	Before further flight after the paragraph (f)(1) inspection of this AD.	In accordance with the ACCOMPLISHMENT INSTRUCTIONS section of Raytheon Aircraft Service Bulletin SB 24–3215, Rev. 1, issued February 1999, revised June 2001, and the Model 1900D Airliner Maintenance Manual.
(3) Do not install, on any affected airplane, any KGS Electronics AC inverter with serial number in the range of 306 through 803 not identified as Mod 2DD.	As of the effective date of this AD.	Not applicable.

Note 2: An owner/operator of an airplane assigned to a Group may disregard the above Group paragraphs that do not apply to his/her airplane.

(g) *Can I comply with this AD in any other way?* You may use an alternative method of compliance or adjust the compliance time if:

(1) Your alternative method of compliance provides an equivalent level of safety; and

(2) The Manager, Wichita Aircraft Certification Office, approves your alternative. Submit your request through an FAA Principal Maintenance Inspector, who may add comments and then send it to the Manager, Wichita Aircraft Certification Office.

Note 3: This AD applies to each airplane identified in paragraph (a) of this AD, regardless of whether it has been modified, altered, or repaired in the area subject to the requirements of this AD. For airplanes that have been modified, altered, or repaired so that the performance of the requirements of this AD is affected, the owner/operator must request approval for an alternative method of compliance in accordance with paragraph (g) of this AD. The request should include an assessment of the effect of the modification, alteration, or repair on the unsafe condition addressed by this AD; and, if you have not eliminated the unsafe condition, specific actions you propose to address it.

(h) *Where can I get information about any already-approved alternative methods of compliance?* Contact Todd Dixon, Aerospace Engineer, FAA, Wichita Aircraft Certification Office (ACO), 1801 Airport Road, Room 100, Wichita, Kansas 67209; telephone: (316) 946–4152; facsimile: (316) 946–4407.

(i) *What if I need to fly the airplane to another location to comply with this AD?* The FAA can issue a special flight permit under sections 21.197 and 21.199 of the Federal Aviation Regulations (14 CFR 21.197 and 21.199) to operate your airplane to a location where you can accomplish the requirements of this AD.

(j) *How do I get copies of the documents referenced in this AD?* You may get copies of the documents referenced in this AD from Raytheon Aircraft Company, 9709 E. Central, Wichita, Kansas 67201–0085; telephone: (800) 429–5372 or (316) 676–3140. You may view these documents at FAA, Central Region, Office of the Regional Counsel, 901 Locust, Room 506, Kansas City, Missouri 64106.

Issued in Kansas City, Missouri, on October 18, 2002.

Michael Gallagher,

Manager, Small Airplane Directorate, Aircraft Certification Service.

[FR Doc. 02–27196 Filed 10–24–02; 8:45 am]

BILLING CODE 4910–13–P

DEPARTMENT OF TRANSPORTATION

Federal Aviation Administration

14 CFR Part 60

[Docket No. FAA–2002–12461; Notice No. 02–11]

RIN 2120–AH07

Flight Simulation Device Initial and Continuing Qualification and Use; Correction

AGENCY: Federal Aviation Administration (FAA), DOT.

ACTION: Notice of proposed rulemaking (NPRM); correction.

SUMMARY: This document makes a correction to the proposed rule published in the **Federal Register** on September 25, 2002 (67 FR 60284), which proposes to establish flight simulation device qualification requirements in a new part. The FAA inadvertently omitted a table in the original NPRM.

DATES: Send your comments on or before December 24, 2002.

ADDRESSES: Address your comments to the Docket Management System, U.S. Department of Transportation, Room Plaza 401, 400 Seventh Street, SW., Washington, DC 20590–0001. You must identify the docket number FAA–2002–12461 at the beginning of your comments, and you should submit two copies of your comments. If you wish to receive confirmation that FAA received your comments, include a self-addressed, stamped postcard.

You may also submit comments through the Internet to *http://dms.dot.gov*. You may review the public docket containing comments to these proposed regulations in person in the Dockets Office between 9 a.m. and 5 p.m., Monday through Friday, except Federal holidays. The Dockets Office is on the plaza level of the NASSIF Building at the Department of Transportation at the above address. Also, you may review public dockets on the Internet at *http://dms.dot.gov*.

FOR FURTHER INFORMATION CONTACT: Edward Cook, National Simulator Program Staff (AFS–205), Flight Standards Service, Federal Aviation Administration, 1701 Columbia Avenue, College Park, GA 30337; telephone (404) 305–6100.

SUPPLEMENTARY INFORMATION: On September 25, 2002, the FAA published Notice No. 02–11, Flight Simulation Device Initial and Continuing Qualification and Use (67 FR 60284). The NPRM proposed to amend the regulations to establish flight simulation device qualification requirements for all certificate holders in a new part. The FAA inadvertently omitted a table entitled ''Table of Alternative Source Data FTD Levels 2, 3, and 5. Single Engine (Turbo-Propeller) Airplane.'' The table provides a range of performance that is typical for single engine, turbo-propeller powered airplanes for the indicated objective tests located in Attachment 2 of appendix B to part 60.

Correction

In proposed rule FR Doc. 02–14785, published on September 25, 2002 (67 FR 60284), make the following corrections:

PART 60—[CORRECTED]

Appendix B to part 60—[Corrected]

1. On page 60403, in Attachment 2 to appendix B to part 60, immediately following Figure 6. Small, Multi-Engine (Reciprocating) Airplane, Rudder Pedal Position vs. Force, add the following table:

Attachment 2 to appendix B to part 60—Flight Training Device (FTD) Objective Tests

* * * * *

Table of Alternative Source Data FTD Levels 2, 3, and 5. Single Engine (Turbo-Propeller) Airplane

QPS Requirement	
Applicable Test and Test Number	**Authorized Performance Range**
2. Performance	
a. Takeoff.	
(1) Ground acceleration time; brake release to liftoff speed	20–30 Seconds.
b. Climb.	
(1) Normal climb with nominal gross weight, at best rate-of-climb airspeed.	Climb airspeed = 95–115 knots. Climb rate = 800–1800 fpm (4–9 m/sec).
c. Ground Deceleration.	
(1) Deceleration time from 80 knots to zero; with a nominal gross weight; using wheel brakes on a dry runway.	20–35 Seconds.
d. Engines.	
(1) Acceleration; idle to takeoff power	4–8 Seconds.
(2) Deceleration; takeoff power to idle	3–7 Seconds.
3. Handling Qualities.	
a. Static Control Checks.	
(1)(b) Column position vs. force	Plot of Column Position vs. Force must fall within the shaded areas shown in Figure 7 of this appendix (Single Engine [Turbo-Propeller] Airplanes).

Table of Alternative Source Data FTD Levels 2, 3, and 5. Single Engine (Turbo-Propeller) Airplane—Continued

QPS Requirement	
Applicable Test and Test Number	**Authorized Performance Range**
(2)(b) Wheel position vs. force	Plot of Wheel Position vs. Force must fall within the shaded areas shown in Figure 8 of this appendix (Single Engine [Turbo-Propeller] Airplanes).
(3)(b) Pedal position vs. force	Plot of Rudder Pedal Position vs. Force must fall within the shaded areas shown in Figure 9 of this appendix (Single Engine [Turbo-Propeller] Airplanes).
(4) Nosewheel steering force	Plot of Rudder Pedal Position vs. Force must fall within the shaded areas shown in Figure 9 of this appendix (Single Engine [Turbo-Propeller] Airplanes).
(5) Rudder pedal steering calibration with full rudder pedal travel	10–30 degrees of nosewheel angle, both sides of neutral.
(8) Brake pedal position vs. force; at maximum pedal deflection	50–100 lbs (22–44 daN) of force.
b. Longitudinal.	
(1) Power change force. (a) Trim for straight and level flight at 80% of normal cruise airspeed with necessary power. Reduce power to flight idle. Do not change trim or configuration. After stabilized, record column force necessary to maintain original airspeed; or	8 lbs (3.5 daN) of Push force to 8 lbs (3.5 daN) of Pull force.
(b) Trim for straight and level flight at 80% of normal cruise airspeed with necessary power. Add power to maximum setting. Do not change trim or configuration. After stabilized, record column force necessary to maintain original airspeed.	12–22 lbs (5.3–9.7 daN) of force (Push).
(2) Flap/slat change force. (a) Trim for straight and level flight with flaps fully retracted at a constant airspeed within the flaps-extended airspeed range. Do not adjust trim or power. Extend the flaps to 50% of full flap travel. After stabilized, record stick force necessary to maintain original airspeed; or	5–15 lbs (2.2–6.6 daN) of force (Pull).
(b) Trim for straight and level flight with flaps extended to 50% of full flap travel, at a constant airspeed within the flaps-extended airspeed range. Do not adjust trim or power. Retract the flaps to zero (fully retracted). After stabilized, record stick force necessary to maintain original airspeed.	5–15 lbs (2.2–6.6 daN) of force (Push).
(3) Gear change force. (a) Trim for straight and level flight with landing gear retracted at a constant airspeed within the landing gear-extended airspeed range. Do not adjust trim or power. Extend the landing gear. After stabilized, record stick force necessary to maintain original airspeed; or	2–12 lbs (0.88–5.3 daN) of force (Pull).
(b) Trim for straight and level flight with landing gear extended, at a constant airspeed within the landing gear-extended airspeed range. Do not adjust trim or power. Retract the landing gear. After stabilized, record stick force necessary to maintain original airspeed..	2–12 lbs (0.88–5.3 daN) of force (Push).
(4) Gear and flap operating times. (a) Extend gear	2–12 seconds.
(b) Retract gear	2–12 seconds.
(c) Extend flaps, zero to 50% travel	(c) 3–13 seconds.
(d) Retract flaps, 50% travel to zero	(d) 3–13 seconds.
(5) Longitudinal trim	Must be able to trim longitudinal stick force to ''zero'' in each of the following configurations: (a) cruise; (b) approach; and (c) landing.
(7) Longitudinal static stability	Must exhibit positive static stability.

Table of Alternative Source Data FTD Levels 2, 3, and 5. Single Engine (Turbo-Propeller) Airplane—Continued

QPS Requirement	
Applicable Test and Test Number	**Authorized Performance Range**
(8) Stall warning (actuation of stall warning device) with nominal gross weight; wings level; clean configuration, and a deceleration rate of approximately one (1) knot per second. (a) Landing configuration	60–90 knots; ± 5 degrees of bank.
(b) Clean configuration	Landing configuration speed, + 10–20 percent.
(9)(b) Phugoid dynamics	Must have a phugoid with a period of 30–60 seconds; and may not reach ½ or double amplitude in less than 2 cycles.
c. Lateral Directional.	
(1) Roll response. Roll rate must be measured through at least 30 degrees of roll. Aileron control must be deflected 50 percent of maximum travel.	Must have a roll rate of 6–40 degrees/second.
(2) Response to roll controller step input. Trim for straight and level flight at nominal gross weight and approach airspeed. Roll into a 30 degree bank turn and stabilize. When ready, input a 50 percent aileron control opposite to the direction of turn. When reaching zero bank angle, rapidly neutralize the aileron control and release. Record the response from at least 2 seconds prior to the initiation of control input opposite to the direction of turn until at least 20 seconds after neutralization of the controls.	Roll rate must decrease to not more than 10 percent of the roll rate achieved, within 1–3 seconds of control release.
(3)(a) and (b) Spiral stability. Cruise configuration and normal cruise airspeed. Establish a 20–30 degree bank. When stabilized, neutralize the aileron control and release. Must be completed in both directions of turn.	Initial bank angle (± 5 degrees) after 20 seconds.
(4)(b) Rudder response. Use 50 percent of maximum rudder deflection. Applicable to approach or landing configuration.	6–12 degrees/second yaw rate.
(5)(b) Dutch roll, yaw damper off. Applicable to cruise and approach configurations	A period of 2–5 seconds; and ½–3 cycles.
(6) Steady state sideslip. Use 50 percent rudder deflection; Applicable to approach and landing configurations.	2–10 degrees of bank; 4–10 degrees of sideslip; and 2–10 degrees of aileron.
4. Cockpit Instrument Response.	
Instrument systems response to an abrupt pilot controller input. One test is required in each axis (pitch, roll, and yaw).	300 milliseconds or less.

* * * * *

Issued in Washington, DC, on October 18, 2002.

Donald P. Byrne,

Assistant Chief Counsel for Regulations.

[FR Doc. 02–27169 Filed 10–24–02; 8:45 am]

BILLING CODE 4910–13–P

ENVIRONMENTAL PROTECTION AGENCY

40 CFR Part 52

[CA 247–0364b; FRL–7396–2]

Revisions to the California State Implementation Plan, Ventura County Air Pollution Control District

AGENCY: Environmental Protection Agency (EPA).

ACTION: Proposed rule.

SUMMARY: EPA is proposing to approve a revision to the Ventura County Air Pollution Control District (VCAPCD) portion of the California State Implementation Plan (SIP). This revision concerns emissions of oxides of nitrogen (NO_X) and carbon monoxide (CO) from stationary internal combustion engines. In accordance with the Clean Air Act as amended in 1990 (CAA or the Act), we are taking action on a local rule that regulates these emission sources.

DATES: Any comments on this proposal must arrive by November 25, 2002.

ADDRESSES: Mail comments to Andy Steckel, Rulemaking Office Chief (AIR–4), U.S. Environmental Protection

Agency, Region IX, 75 Hawthorne Street, San Francisco, CA 94105.

You can inspect a copy of the submitted rule revision and EPA's technical support document (TSD) at our Region IX office during normal business hours. You may also see a copy of the submitted rule revision and TSD at the following locations:

Air and Radiation Docket and Information Center (6102T), U.S. Environmental Protection Agency, Room B–102, 1301 Constitution Avenue, NW., Washington, DC 20460.

California Air Resources Board, Stationary Source Division, Rule Evaluation Section, 1001 ''I'' Street, Sacramento, CA 95814.

Ventura County Air Pollution Control District, 669 Country Square Drive, Ventura, CA 93003.

FOR FURTHER INFORMATION CONTACT: Al Petersen, Rulemaking Office (AIR–4), U.S. Environmental Protection Agency, Region IX; (415) 947–4118.

SUPPLEMENTARY INFORMATION: This proposal addresses the approval of the local VCAPCD Rule 74.9. In the Rules and Regulations section of this **Federal Register**, we are approving this local rule in a direct final action without prior proposal because we believe this SIP revision is not controversial. If we receive adverse comments, however, we will publish a timely withdrawal of the direct final rule and address the comments in subsequent action based on this proposed rule. We do not plan to open a second comment period, so anyone interested in commenting should do so at this time. If we do not receive adverse comments, no further activity is planned. For further information, please see the direct final action.

Dated: August 30, 2002.

Keith Takata,

Acting Regional Administrator, Region IX.

[FR Doc. 02–27135 Filed 10–24–02; 8:45 am]

BILLING CODE 6560–50–P

FEDERAL COMMUNICATIONS COMMISSION

47 CFR Parts 0, 43, 63, and 64

[IB Docket No. 02–324, IB Docket No. 96–261, FCC No 02–285]

International Settlements Policy Reform and International Settlement Rates

AGENCY: Federal Communications Commission.

ACTION: Notice of proposed rulemaking.

SUMMARY: This document initiates a proceeding to re-examine the Commission's International Settlements Policy (ISP). The purpose of this proceeding is to: obtain further information about the competitive status of the U.S.-international marketplace; seek comment widely on a variety of proposals to reform the Commission's current application of the ISP and settlement rate policies; and request information on the issue of foreign mobile termination rates.

DATES: Comments are due December 10, 2002 and reply comments are due January 9, 2003.

ADDRESSES: Federal Communications Commission at 445 12th Street, SW., Room TW–B204, Washington, DC, 20554.

FOR FURTHER INFORMATION: James Ball, Chief, Policy Division, International Bureau, Lisa Choi, Senior Legal Advisor, Policy Division, International Bureau or Gardner Foster, Attorney Advisor, Policy Division, International Bureau at (202) 418–1460. Information regarding this proceeding and others may also be found on the Commission's website at *www.fcc.gov.* Regarding the information collections requirements contact Judy Boley at (202) 418–0214, 445 12th Street, SW., Rm. 1–C804, Washington, DC 20554 or via Internet at *jboley@fcc.gov* and Edward C. Springer, OMB Desk Officer, Room 10236 NEOB, 725 17th Street, NW., Washington, DC 20503.

SUPPLEMENTARY INFORMATION: This is a summary of the Commission's *Notice of Proposed Rulemaking* in IB Docket No. 02–324; IB Docket No. 96–261; FCC 02–285, adopted October 10, 2002 and released on October 11, 2002. Pursuant to §§ 1.415 and 1.419 of the Commission's rules, 47 CFR 1.415, 1.419 interested parties may file comments on or before December 10, 2002, and reply comments on or before January 9, 2003. Comments may be filed using the Commission's Electronic Comment Filing System (ECFS) or by filing paper copies. *See Electronic Filing of Documents in Rulemaking Proceedings*, 63 FR 24121 (1998). Comments filed through the ECFS can be sent as an electronic file via the Internet to *http://www.fcc.gov/e-file/ecfs.html.* Generally, only one copy of an electronic submission must be filed. If multiple docket or rulemaking numbers appear in the caption of this proceeding, however, commenters must transmit one electronic copy of the comments to each docket or rulemaking number referenced in the caption. In completing the transmittal screen, commenters should include their full name, U.S. Postal Service mailing address, and the applicable docket or rulemaking number. Parties may also submit an electronic comment by Internet e-mail. To get filing instructions for e-mail comments, commenters should send an e-mail to *ecfs@fcc.gov*, and should include the following words in the body of the message, ''get form <your e-mail address>.'' A sample form and directions will be sent in reply. Parties who choose to file by paper must file an original and four copies of each filing. If more than one docket or rulemaking number appear in the caption of this proceeding, commenters must submit two additional copies for each additional docket or rulemaking number. Filings can be sent by hand or messenger delivery, by commercial overnight courier, or by first-class or overnight U.S. Postal Service mail (although we continue to experience delays in receiving U.S. Postal Service mail). The Commission's contractor, Vistronix, Inc., will receive hand-delivered or messenger-delivered paper filings for the Commission's Secretary at 236 Massachusetts Avenue, NE., Suite 110, Washington, DC 20002. The filing hours at this location are 8 a.m. to 7 p.m. All hand deliveries must be held together with rubber bands or fasteners. Any envelopes must be disposed of before entering the building. Commercial overnight mail (other than U.S. Postal Service Express Mail and Priority Mail) must be sent to 9300 East Hampton Drive, Capitol Heights, MD 20743. U.S. Postal Service first-class mail, Express Mail, and Priority Mail should be addressed to 445 12th Street, SW., Washington, DC 20554. All filings must be addressed to the Commission's Secretary, Office of the Secretary, Federal Communications Commission. Copies of the *Notice of Proposed Rulemaking* and any subsequently-filed documents in this matter may be obtained from Qualex International, in person at 445 12th Street, SW., Room CY–B402, Washington, DC 20554, via telephone at (202) 863–2893, via facsimile at (202) 863–2898, or via e-mail at *qualexint@aol.com.* The *Notice of Proposed Rulemaking* and any associated documents are also available for public inspection and copying during normal reference room hours at the following Commission office: FCC Reference Information Center, 445 12th Street, SW., Room CY–A257, Washington, DC 20554.

Paperwork Reduction Act

The Federal Communications Commission, as part of its continuing effort to reduce paperwork burden

invites the general public and other Federal agencies to take this opportunity to comment on the following information collection, as required by the Paperwork Reduction Act of 1995, Public Law 104–13. An agency may not conduct or sponsor a collection of information unless it displays a currently valid control number. No person shall be subject to any penalty for failing to comply with a collection of information subject to the Paperwork Reduction Act (PRA) that does not display a valid control number. Comments are requested concerning (a) whether the proposed collection of information is necessary for the proper performance of the functions of the Commission, including whether the information shall have practical utility; (b) the accuracy of the Commission's burden estimate; (c) ways to enhance the quality, utility, and clarity of the information collected; and (d) ways to minimize the burden of the collection of information on the respondents, including the use of automated collections techniques or other forms of information technology. This *Notice of Proposed Rulemaking* contains proposed information collections. As part of its continuing effort to reduce paperwork burdens, we invite the general public and the Office of Management and Budget (OMB) to take this opportunity to comment on the information collections contained in this NPRM, as required by the Paperwork Reduction Act of 1995, Public Law 104–13. Public and agency comments are due at the same time as other comments on this NPRM; OMB comments are due 60 days from date of publication of this NPRM in the **Federal Register**.

Summary of Notice of Proposed Rulemaking

The Commission initiates this rulemaking to examine possible reform of our International Settlements Policy (ISP) and International Simple Resale (ISR) and benchmarks policies. The Commission's policies in this area have been and will continue to protect U.S. consumers where competition may be nonexistent or insufficient. The Commission last examined the reform of the ISP in 1999. Since then, there has developed increased participation and competition in the U.S.-international marketplace, decreased settlement and end-user rates, and growing liberalization and privatization in foreign markets. In addition, as a result of U.S. policies and other factors, the average U.S.-international settlement rate has fallen from $0.35 in 1997 to $0.14 in 2001 and, correspondingly, U.S. calling prices have dropped from $0.67 in 1997 to $0.33 in 2001. These developments provide an opportunity for the Commission to review and reform our existing regulatory requirements that may be inhibiting the benefits of lower calling prices and greater service innovations to consumers. We consider in this proceeding adopting more market-based policies. In addition, in this NPRM, we inquire whether foreign mobile termination rates may be adversely affecting U.S. consumers and the market for U.S.-international services.

Initial Regulatory Flexibility Certification

Pursuant to the Regulatory Flexibility Act (RFA), the Commission has prepared an Initial Regulatory Flexibility Analysis (IRFA) on the possible significant economic impact on small entities by the policies and actions considered in the NPRM. The test of the IRFA is set forth. Written public comments are requested on this IRFA. Comments must be identified as responses to the IRFA and must be filed by the deadlines for comments on the NPRM as provided in paragraph 56 of this Notice of Proposed Rulemaking. The Commission will send a copy of the Notice, including the IRFA, to the Chief Counsel for Advocacy of the Small Business Administration.

Ordering Clauses

Pursuant to sections 1, 4(i)–4(j), 201–205, 214, 303(r), and 309 of the Communications Act of 1934, as amended, 47 U.S.C. 151, 154(i)–154(j), 201–205, 214, 303(r), 309, this Notice of Proposed Rulemaking is hereby adopted.

The Commission's Consumer and Governmental Affairs Bureau, Reference Information Center shall send a copy of this Notice of Proposed Rulemaking, including the initial regulatory flexibility certification, to the Chief Counsel for Advocacy of the Small Business Administration, in accordance with Section 603(a) of the Regulatory Flexibility Act, 5 U.S.C. 601, *et seq.* (1981).

List of Subjects in 47 CFR Parts 0, 43, 63 and 64

Communications common carriers, Reporting and recordkeeping requirements.

Federal Communications Commission.

Marlene H. Dortch,

Secretary.

[FR Doc. 02–27312 Filed 10–24–02; 8:45 am]

BILLING CODE 6712–01–P

DEPARTMENT OF DEFENSE

48 CFR Part 252

[DFARS Case 2002–D019]

Defense Federal Acquisition Regulation Supplement; Transportation of Supplies by Sea—Commercial Items

AGENCY: Department of Defense (DoD).

ACTION: Proposed rule with request for comments.

SUMMARY: DoD is proposing to amend the Defense Federal Acquisition Regulation Supplement (DFARS) to add an alternate version of a clause, pertaining to transportation of supplies by sea, to the list of clauses included in contracts for commercial items to implement statutes or Executive orders. The alternate version of the clause applies to contracts at or below the simplified acquisition threshold.

DATES: Comments on the proposed rule should be submitted in writing to the address shown below on or before December 24, 2002, to be considered in the formation of the final rule.

ADDRESSES: Respondents may submit comments directly on the World Wide Web at *http://emissary.acq.osd.mil/dar/dfars.nsf/pubcomm*. As an alternative, respondents may e-mail comments to: *dfars@acq.osd.mil*. Please cite DFARS Case 2002–D019 in the subject line of e-mailed comments.

Respondents that cannot submit comments using either of the above methods may submit comments to: Defense Acquisition Regulations Council, Attn: Ms. Amy Williams, OUSD (AT&L) DP (DAR), IMD 3C132, 3062 Defense Pentagon, Washington, DC 20301–3062; facsimile (703) 602–0350. Please cite DFARS Case 2002–D019.

At the end of the comment period, interested parties may view public comments on the World Wide Web at *http://emissary.acq.osd.mil/dar/dfars.nsf*.

FOR FURTHER INFORMATION CONTACT: Ms. Amy Williams, (703) 602–0328.

SUPPLEMENTARY INFORMATION:

A. Background

This proposed rule corrects an oversight in the final rule published at 67 FR 38020 on May 31, 2002, under DFARS Case 2000–D014, Ocean Transportation by U.S.-Flag Vessels. That rule added requirements for contractors to use U.S.-flag vessels when transporting supplies by sea under contracts at or below the simplified acquisition threshold, in accordance with 10 U.S.C. 2631. The rule provided

an Alternate III for use with the clause at DFARS 252.247–7023, Transportation of Supplies by Sea, in contracts at or below the simplified acquisition threshold, to minimize the information required from contractors under these contracts. This proposed rule adds Alternate III of 252.247–7023 to the list of clauses at 252.212–7001, Contract Terms and Conditions Required to Implement Statutes or Executive Orders Applicable to Defense Acquisitions of Commercial Items, as it was inadvertently omitted from the previous DFARS rule.

This rule was not subject to Office of Management and Budget review under Executive Order 12866, dated September 30, 1993.

B. Regulatory Flexibility Act

DoD does not expect this rule to have a significant economic impact on a substantial number of small entities within the meaning of the Regulatory Flexibility Act, 5 U.S.C. 601, *et seq.*, because most entities providing ocean transportation of freight are not small businesses, and the rule minimizes the information required from contractors under contracts valued at or below the simplified acquisition threshold. Therefore, DoD has not performed an initial regulatory flexibility analysis. DoD invites comments from small businesses and other interested parties. DoD also will consider comments from small entities concerning the affected DFARS subpart in accordance with 5 U.S.C. 610. Such comments should be submitted separately and should cite DFARS Case 2002–D019.

C. Paperwork Reduction Act

The information collection requirements in this rule are covered by Office of Management Budget Clearance Number 0704–0245, and have been approved for use through July 31, 2004.

List of Subjects in 48 CFR Part 252

Government procurement.

Michele P. Peterson,

Executive Editor, Defense Acquisition Regulations Council.

Therefore, DoD proposes to amend 48 CFR part 252 as follows:

1. The authority citation for 48 CFR part 252 continues to read as follows:

Authority: 41 U.S.C. 421 and 48 CFR Chapter 1.

PART 252—SOLICITATION PROVISIONS AND CONTRACT CLAUSES

2. Section 252.212–7001 is amended as follows:

a. By revising the clause date to read ''(XXX 2002)''; and

b. In paragraph (b), by revising entry ''252.247–7023'' to read as follows:

252.212–7001 Contract Terms and Conditions Required to Implement Statutes or Executive Orders Applicable to Defense Acquisitions of Commercial Items.

* * * * *

(b) * * *

252.247–7023 Transportation of Supplies by Sea (May 2002) (Alternate I) (Mar 2000) (Alternate II) (Mar 2000) (Alternate III) (May 2002) (10 U.S.C. 2631).

* * * * *

[FR Doc. 02–27106 Filed 10–24–02; 8:45 am]

BILLING CODE 5001–08–P

Notices

Federal Register
Vol. 67, No. 207
Friday, October 25, 2002

This section of the FEDERAL REGISTER contains documents other than rules or proposed rules that are applicable to the public. Notices of hearings and investigations, committee meetings, agency decisions and rulings, delegations of authority, filing of petitions and applications and agency statements of organization and functions are examples of documents appearing in this section.

DEPARTMENT OF AGRICULTURE

Forest Service

Olympic Provincial Advisory Committee (OPAC)

AGENCY: Forest Service, USDA.

ACTION: Notice of meeting.

SUMMARY: The Olympic Advisory Committee (OPAC) will meet on November 22, 2002. The meeting will be held at the Olympic National Forest Headquarters office at 1835 Black Lake Blvd. SW., Olympia, Washington. The meeting will begin at 9:30 a.m. and end at approximately 3:30 p.m. Agenda topics are: (1) Current status of key Forest issues; (2) Status update on the Resource Advisory Committees for Rural Schools and Community Self-Determination Act of 2000; (3) Consultation with Indian Tribes; (4) Social and Economic Monitoring of the Northwest Forest Plan; (5) Regional Ecosystem Office Update; (6) Road Management Update; (7) Olympic National Forest Northwest Forest Plan Monitoring Report Validation; (8) Open forum; and (9) Public comments.

All Olympic Province Advisory Committee Meetings are open to the public. Interested citizens are encouraged to attend.

FOR FURTHER INFORMATION CONTACT: Direct questions regarding this meeting to Ken Eldredge, Province Liaison, USDA, Olympic National Forest Headquarters, 1835 Black Lake Blvd., Olympia, WA 98512–5623, (360) 956–2323 or Dale Hom, Forest Supervisor, at (360) 956–2301.

Dated: October 21, 2002.

Dale Hom,

Forest Supervisor, Olympic National Forest.

[FR Doc. 02–27202 Filed 10–24–02; 8:45 am]

BILLING CODE 3410–11–M

DEPARTMENT OF AGRICULTURE

Forest Service

Wrangell-Petersburg Resource Advisory Committee

AGENCY: Forest Service, USDA.

ACTION: Notice of meeting.

SUMMARY: The Wrangell-Petersburg Resource Advisory Committee (RAC) will meet beginning at 2 p.m. on Sunday, November 17 through noon, Tuesday, November 19, 2002, in Wrangell, Alaska. The purpose of this meeting is to: Receive training pertinent to committee operations; to establish administrative procedures by which the committee will operate; and to create the process by which projects covered under Title II, Public Law 106–393, H.R. 2389, the Secure Rural Schools and Community Self-Determination Act of 2000, also called the ''Payments to States'' Act, will be identified and evaluated.

DATES: The meeting will be held commencing at 2 p.m. on Sunday, November 17 and adjourn at noon, Tuesday, November 19, 2002.

ADDRESSES: The meeting will be held at Harding's Old Sourdough Lodge, 1104 Peninsula, Wrangell, Alaska.

FOR FURTHER INFORMATION CONTACT: Chip Weber, Wrangell District Ranger, P.O. Box 51, Wrangell, AK 99929, phone (907) 874–2323, e-mail *cweber@fs.fed.us,* or Patty Grantham, Petersburg District Ranger, P.O. Box 1328, Petersburg, AK 99833, phone (907) 772–3871, e-mail *pagrantham@fs.fed.us.*

SUPPLEMENTARY INFORMATION: This will be the first meeting of the committee, and will focus on training regarding Federal Advisory Committee processes, and on the content of the Payments to States legislation (Pub. L. 106–393); on administrative procedures regarding the functioning of the Wrangell-Petersburg RAC; and on developing the process by which projects will be requested and evaluated for recommendation for Title II funding. The meeting is open to the public. Public input opportunity will be provided and individuals will have the opportunity to address the committee at that time.

Dated: October 18, 2002.

Thomas Puchlerz,

Forest Supervisor.

[FR Doc. 02–27200 Filed 10–24–02; 8:45 am]

BILLING CODE 3410–11–M

COMMITTEE FOR PURCHASE FROM PEOPLE WHO ARE BLIND OR SEVERELY DISABLED

Agency Information Collection Activities: Proposed Collection; Comment Request

AGENCY: Committee for Purchase From People Who Are Blind or Severely Disabled.

ACTION: Proposed collection; comment request.

SUMMARY: The Committee for Purchase From People Who Are Blind or Severely Disabled is announcing an opportunity for public comment on the proposed collection of certain information by the agency. Under the Paperwork Reduction Act of 1995, Federal agencies are required to publish notice in the **Federal Register** concerning each proposed collection of information, and to allow 60 days for public comment in response to the notice. This notice solicits comments on requirements relating to the annual certifications of nonprofit agencies serving people who are blind (Committee Form 403).

DATES: Comments must be submitted on or before December 24, 2002.

ADDRESSES: Written comments and/or requests for information, including copies of the form and supporting documentation, should be directed to: Janet Yandik, Information Management Specialist, Committee for Purchase From People Who Are Blind or Severely Disabled, 1421 Jefferson Davis Highway, Jefferson Plaza 2, Suite 10800, Arlington, VA 22202–3259, e-mail: *jyandik@jwod.gov;* phone: (703) 603–7746; fax: (703) 603–0655.

SUPPLEMENTARY INFORMATION: The Committee has an annual certification form for nonprofit agencies serving people who are blind (Committee Form 403, OMB Control Number 3037–0001.)

Information on the form is needed to ensure that nonprofit agencies serving people who are blind, that participate in the Javits-Wagner-O'Day program, continue to meet the requirements of 41 U.S.C. 46–48c.

Committee Form 403 has been modified to add the following items:

1. In section 5, Certification: A line will be added for the Agency Executive's email address.

2. In section 7, Data for Work Performed under Javits-Wagner-O'Day (JWOD) Act Only: A line will be added to count the number of people who are blind, who worked on JWOD products and the number of blind who worked on JWOD services.

3. In section 8, Placement and Promotion of People Who Are Blind: A third column will be added entitled ''Direct Placement'' to account for individuals placed into competitive or supported employment, but cannot currently be accounted for under the JWOD and NON–JWOD categories.

4. In section 9, Sales Data: A block will be added to collect sales data from Base Supply Centers separate from the service sales.

Sheryl D. Kennerly,

Director of Information Management.

[FR Doc. 02–27254 Filed 10–24–02; 8:45 am]

BILLING CODE 6353–01–P

COMMITTEE FOR PURCHASE FROM PEOPLE WHO ARE BLIND OR SEVERELY DISABLED

Agency Information Collection Activities: Proposed Collection; Comment Request

AGENCY: Committee for Purchase From People Who Are Blind or Severely Disabled.

ACTION: Proposed collection; comment request.

SUMMARY: The Committee for Purchase From People Who Are Blind or Severely Disabled is announcing an opportunity for public comment on the proposed collection of certain information by the agency. Under the Paperwork Reduction Act of 1995, Federal agencies are required to publish notice in the **Federal Register** concerning each proposed collection of information, and to allow 60 days for public comment in response to the notice. This notice solicits comments on requirements relating to the annual certifications of nonprofit agencies serving people who have severe disabilities (Committee Form 404).

DATES: Comments must be submitted on or before December 24, 2002.

ADDRESSES: Written comments and/or requests for information, including copies of the form and supporting documentation, should be directed to: Janet Yandik, Information Management Specialist, Committee for Purchase From People Who Are Blind or Severely Disabled, 1421 Jefferson Davis Highway, Jefferson Plaza 2, Suite 10800, Arlington, VA 22202–3259. e-mail: *jyandik@jwod.gov*; phone: (703) 603–7746; fax: (703) 603–0655.

SUPPLEMENTARY INFORMATION: The Committee has an annual certification form for nonprofit agencies serving people who have severe disabilities (Committee Form 404, OMB Control Number 3037–0002.)

Information on the form is needed to ensure that nonprofit agencies serving people who have severe disabilities, that participate in the Javits-Wagner-O'Day program, continue to meet the requirements of 41 U.S.C. 46–48c.

Committee Form 404 has been modified to add the following items:

1. In section 5, Certification: A line will be added for the Agency Executive's email address.

2. In section 7, Data for Work Performed under Javits-Wagner-O'Day (JWOD) Act Only: A line will be added to count the number of people who are severely disabled, who worked on JWOD products and the number of severely disabled who worked on JWOD services.

3. In section 8, Placement and Promotion of People with Severe Disabilities: A third column will be added entitled ''Direct Placement'' to account for individuals placed into competitive or supported employment, but cannot currently be accounted for under the JWOD and NON–JWOD categories.

4. In section 9, Sales Data: A block will be added to collect sales data from Base Supply Centers separate from the service sales.

Sheryl D. Kennerly,

Director of Information Management.

[FR Doc. 02–27255 Filed 10–24–02; 8:45 am]

BILLING CODE 6353–01–P

COMMITTEE FOR PURCHASE FROM PEOPLE WHO ARE BLIND OR SEVERELY DISABLED

Procurement List; Proposed Additions

AGENCY: Committee for Purchase From People Who Are Blind or Severely Disabled.

ACTION: Proposed additions to procurement list.

SUMMARY: The Committee is proposing to add to the Procurement List services to be furnished by nonprofit agencies employing persons who are blind or have other severe disabilities.

Comments Must Be Received on or Before: November 24, 2002.

ADDRESSES: Committee for Purchase From People Who Are Blind or Severely Disabled, Jefferson Plaza 2, Suite 10800, 1421 Jefferson Davis Highway, Arlington, Virginia 22202–3259.

FOR FURTHER INFORMATION CONTACT: Sheryl D. Kennerly, (703) 603–7740.

SUPPLEMENTARY INFORMATION: This notice is published pursuant to 41 U.S.C 47(a)(2) and 41 CFR 51–2.3. Its purpose is to provide interested persons an opportunity to submit comments on the possible impact of the proposed actions.

If the Committee approves the proposed additions, the entities of the Federal Government identified in the notice for each service will be required to procure the services listed below from nonprofit agencies employing persons who are blind or have other severe disabilities.

I certify that the following action will not have a significant impact on a substantial number of small entities. The major factors considered for this certification were:

1. If approved, the action will not result in any additional reporting, recordkeeping or other compliance requirements for small entities other than the small organizations that will furnish the services to the Government.

2. If approved, the action will result in authorizing small entities to furnish the services to the Government.

3. There are no known regulatory alternatives which would accomplish the objectives of the Javits-Wagner-O'Day Act (41 U.S.C. 46–48c) in connection with the services proposed for addition to the Procurement List. Comments on this certification are invited.

Commenters should identify the statement(s) underlying the certification on which they are providing additional information.

The following services are proposed for addition to Procurement List for production by the nonprofit agencies listed:

Services

Service Type/Location: Base Supply Center, Federal Law Enforcement Training Center, Brunswick, Georgia.

NPA: L.C. Industries For The Blind, Inc., Durham, North Carolina.

Contract Activity: Federal Law Enforcement Training Center (FLETC).

Service Type/Location: Custodial Service, Camp Bullis (Buildings 5000, 6110, and 6201), San Antonio, Texas.

NPA: Professional Contract Services, Inc., Austin, Texas.

Contract Activity: MEDCOM Health Care Acquisition Activity, Fort Sam Houston, Texas.

Sheryl D. Kennerly,

Director, Information Management.

[FR Doc. 02–27253 Filed 10–24–02; 8:45 am]

BILLING CODE 6353–01–P

DEPARTMENT OF COMMERCE

Quarterly Survey of State and Local Tax Revenues; Proposed Collection; Comment Request

SUMMARY: The Department of Commerce, as part of its continuing effort to reduce paperwork and respondent burden, invites the general public and other Federal agencies to take this opportunity to comment on proposed and/or continuing information collections, as required by the Paperwork Reduction Act of 1995, Public Law 104–13 (44 U.S.C. 3506(c)(2)(A)).

DATES: Written comments must be submitted on or before December 24, 2002.

ADDRESSES: Direct all written comments to Diana Hynek, Departmental Paperwork Clearance Officer, Department of Commerce, Room 6625, 14th and Constitution Avenue, NW., Washington, DC 20230 (or via the Internet at dhynek@doc.gov).

FOR FURTHER INFORMATION CONTACT: Requests for additional information or copies of the information collection instrument(s) and instructions should be directed to David A. Kellerman, Chief, Public Finance Analysis Branch-B, Governments Division, U.S. Census Bureau, Washington, DC 20233–6800 (301–763–7242).

SUPPLEMENTARY INFORMATION:

I. Abstract

The Census Bureau plans to request an extension of the Quarterly Survey of State and Local Tax Revenue. The Bureau needs State and local tax data to publish benchmark statistics on public sector taxes; to provide data to the Bureau of Economic Analysis for GDP calculations and other economic indicators; and to provide data for economic research and comparative studies of governmental finances. Data are collected on a quarterly basis from State and local tax collecting agencies.

Tax collection data are used to measure economic activity for the Nation as a whole, as well as for comparison among the various states. These data also are useful in comparing the mix of taxes employed by individual states, and in determining the revenue raising capacity of different types of taxes.

The Quarterly Survey of Property Tax Collections (form F–71) is sent to 5,739 local government tax collecting agencies in 530 county areas. While some counties are served by a single county level tax collection agency, others have county, city, township, and even school district collectors. Each agency is asked to report the total property tax collections during the past quarter.

The Quarterly Survey of State Tax Collections (Form F–72) is sent to a state level revenue, finance, or budget agency in each state to report tax collection data for the preceding 3-month period.

The Quarterly Survey of Selected Local Taxes (Form F–73) is sent to 70 local tax collection agencies known to have substantial collections of local general sales and/or local individual income taxes.

The expected decrease in the respondent burden is due to a slight reduction in the universe of the survey. Due to the disincorporation and consolidation of certain tax collecting agencies, the number of respondents receiving Form F–71 has decreased by 61. The F–73 increased by 15 due to creation of a new sample. There are no planned content changes to any form.

II. Method of Collection

The F–71 portion of the survey is conducted by mail canvass. Responses are screened manually and then entered on a microcomputer

F–73 forms are sent to respondents by mail canvass or electronically via e-mail. Several respondents have requested to conduct the survey through electronic mail.

F–72 forms are sent to respondents by either facsimile or e-mail (as requested). Respondents are given the option of returning the forms through facsimile, mail or electronically via e-mail.

Telephone follow up of large property tax collectors is the main method used to maximize response. In those instances when we are not able to obtain a response, estimates are made for non-respondents by using data of the same quarter from the last year it had been received.

III. Data

OMB Number: 0607–0112.

Form Number: F–71, F–72, and F–73.

Type of Review: Regular.

Affected Public: State and local governments.

Estimated Number of Respondents: 5,860.

Estimated Time Per Response: 25 minutes.

Estimated Total Annual Burden Hours: 5,911.

Estimated Total Annual Cost: The estimated cost to the respondents is $107,226.

Respondent's Obligation: Voluntary.

Legal Authority: Title 13 U.S.C., Section 182.

IV. Request for Comments

Comments are invited on: (a) Whether the proposed collection of information is necessary for the proper performance of the functions of the agency, including whether the information shall have practical utility; (b) the accuracy of the agency's estimate of the burden (including hours and cost) of the proposed collection of information; (c) ways to enhance the quality, utility, and clarity of the information to be collected; and (d) ways to minimize the burden of the collection of information on respondents, including through the use of automated collection techniques or other forms of information technology.

Comments submitted in response to this notice will be summarized and/or included in the request for OMB approval of this information collection; they also will become a matter of public record.

Dated: October 21, 2002.

Madeleine Clayton,

Management Analyst, Office of the Chief Information Officer.

[FR Doc. 02–27214 Filed 10–24–02; 8:45 am]

BILLING CODE 3510–07–P

DEPARTMENT OF COMMERCE

Submission For OMB Review; Comment Request

DOC has submitted to the Office of Management and Budget (OMB) for clearance the following proposal for collection of information under the provisions of the Paperwork Reduction Act (44 U.S.C. chapter 35).

Agency: U.S. Census Bureau.

Title: 2002 Survey of Business Owners and Self-Employed Persons (SBO).

Form Number(s): SBO–1, SBO–2.

Agency Approval Number: None.

Type of Request: New collection.

Burden: 416,666 hours.

Number of Respondents: 2,500,000.

Avg Hours Per Response: 10 minutes.

Needs and Uses: The 2002 Survey of Business Owners and Self-Employed Persons (SBO) will provide the only comprehensive, regularly collected source of information on selected economic and demographic characteristics for businesses and

business owners by gender, ethnicity, and race. It is conducted as part of the economic census program. This survey was previously known as the Survey of Minority-Owned Business Enterprises (SMOBE) and the Survey of Women-Owned Business Enterprises (SWOBE).

For the 2002 SBO, significant changes have been made to the questionnaire. These changes include the following:

- The questions about race and ethnicity have been modified to meet the OMB guidelines to allow respondents the opportunity to select more than one race. Also, per the OMB guidelines, the Hispanic origin question is placed before the race question.
- The survey adopts person-level reporting for a variety of characteristics for up to three individual owners, because background research suggested difficulty with aggregate reporting of race and ethnicity combinations for multiple owners.
- Several new questions have been borrowed from the former Characteristics of Business Owners survey, which has not been funded for the upcoming economic census. These items will fill the void for many data users.
- A new question has also been added to increase our understanding of the businesses' use of alternative employment arrangements.

These data are needed to evaluate the extent and growth of business ownership by minorities and women in order to provide a framework for assessing and directing Federal, state, and local government programs designed to promote the activities of disadvantaged groups. The Small Business Administration and the Minority Business Development Agency use the SBO data when allocating resources for their business assistance programs. The data are also widely used by private firms and individuals to evaluate their own businesses and markets, by the media for news stories, by researchers and academia for determining firm characteristics, and by the legal profession in evaluating the concentration of minority businesses in particular industries and/or geographic areas.

Affected Public: Businesses or other for-profit.

Frequency: Every five years.

Respondent's Obligation: Mandatory.

Legal Authority: Title 13 U.S.C., Sections 131, 193, & 224.

OMB Desk Officer: Susan Schechter, (202) 395–5103.

Copies of the above information collection proposal can be obtained by calling or writing Diana Hynek, Departmental Paperwork Clearance Officer, (202) 482–3129, Department of Commerce, room 6625, 14th and Constitution Avenue, NW., Washington, DC 20230 (or via the Internet at *dhynek@doc.gov*).

Written comments and recommendations for the proposed information collection should be sent within 30 days of publication of this notice to Susan Schechter, OMB Desk Officer either by fax (202–395–7245) or e-mail (*susan_schechter@omb.eop.gov*).

Dated: October 21, 2002.

Madeleine Clayton,

Management Analyst, Office of the Chief Information Officer.

[FR Doc. 02–27215 Filed 10–24–02; 8:45 am]

BILLING CODE 3510–07–P

DEPARTMENT OF COMMERCE

Census Bureau

Survey of Income and Program Participation (SIPP) Wave 8 of the 2001 Panel

ACTION: Proposed collection; Comment request.

SUMMARY: The Department of Commerce, as part of its continuing effort to reduce paperwork and respondent burden, invites the general public and other federal agencies to take this opportunity to comment on proposed or continuing information collections, as required by the Paperwork Reduction Act of 1995, Pub. L. 104–13 (44 U.S.C. 3506(c)(2)(A)).

DATES: Written comments must be submitted on or before December 24, 2002.

ADDRESSES: Direct all written comments to Diana Hynek, Departmental Paperwork Clearance Officer, Department of Commerce, Room 6625, 14th and Constitution Avenue, NW., Washington, DC 20230 (or via the Internet at *DHynek@doc.gov*).

FOR FURTHER INFORMATION CONTACT: Requests for additional information or copies of the information collection instrument(s) and instructions should be directed to Judith H. Eargle, Census Bureau, FOB 3, Room 3387, Washington, DC 20233–0001, (301) 763–3819.

SUPPLEMENTARY INFORMATION:

I. Abstract

The Census Bureau conducts the SIPP which is a household-based survey designed as a continuous series of national panels. New panels are introduced every few years with each panel usually having durations of one to four years. Respondents are interviewed at 4-month intervals or ''waves'' over the life of the panel. The survey is molded around a central ''core'' of labor force and income questions that remain fixed throughout the life of the panel. The core is supplemented with questions designed to address specific needs, such as obtaining information about child support agreements, support for non-household members, functional limitations and disabilities (adults/children), adult well-being, and welfare reform. These supplemental questions are included with the core and are referred to as ''topical modules.''

The SIPP represents a source of information for a wide variety of topics and allows information for separate topics to be integrated to form a single, unified database so that the interaction between tax, transfer, and other government and private policies can be examined. Government domestic-policy formulators depend heavily upon the SIPP information concerning the distribution of income received directly as money or indirectly as in-kind benefits and the effect of tax and transfer programs on this distribution. They also need improved and expanded data on the income and general economic and financial situation of the U.S. population. The SIPP has provided these kinds of data on a continuing basis since 1983 permitting levels of economic well-being and changes in these levels to be measured over time.

The 2001 Panel is currently scheduled for three years and will include nine waves of interviewing beginning February 2001. Approximately 50,000 households will be selected for the 2001 Panel, of which 37,500 are expected to be interviewed. We estimate that each household will contain 2.1 people, yielding 78,750 interviews in Wave 1 and subsequent waves. Interviews take 30 minutes on average. Three waves of interviewing will occur in the 2001 SIPP Panel during FY 2003. The total annual burden for the 2001 Panel SIPP interviews would be 118,125 hours in FY 2003.

The topical modules for the 2001 Panel Wave 8 collect information about:

- Child Support Agreements.
- Support for Non-Household Members.
- Functional Limitations and Disabilities (Adults/Children).
- Adult Well-Being.
- Welfare Reform.

Wave 8 interviews will be conducted from June 2003 through September 2003.

A 10-minute reinterview of 2,500 people is conducted at each wave to ensure accuracy of responses.

Reinterviews would require an additional 1,253 burden hours in FY 2003.

II. Method of Collection

The SIPP is designed as a continuing series of national panels of interviewed households that are introduced every few years with each panel having durations of one to four years. All household members 15 years old or over are interviewed using regular proxy-respondent rules. During the 2001 Panel, respondents are interviewed a total of nine times (nine waves) at 4-month intervals making the SIPP a longitudinal survey. Sample people (all household members present at the time of the first interview) who move within the country and reasonably close to a SIPP primary sampling unit will be followed and interviewed at their new address. Individuals 15 years old or over who enter the household after Wave 1 will be interviewed; however, if these individuals move, they are not followed unless they happen to move along with a Wave 1 sample individual.

III. Data

OMB Number: 0607–0875.
Form Number: SIPP/CAPI Automated Instrument.
Type of Review: Regular.
Affected Public: Individuals or Households.
Estimated Number of Respondents: 78,750 people per wave.
Estimated Time Per Response: 30 minutes per person, on average.
Estimated Total Annual Burden Hours: 119,378.
Estimated Total Annual Cost: The only cost to respondents is their time.
Respondent's Obligation: Voluntary.
Legal Authority: Title 13, United States Code, Section 182.

IV. Request for Comments

Comments are invited on: (a) Whether the proposed collection of information is necessary for the proper performance of the functions of the agency, including whether the information shall have practical utility; (b) the accuracy of the agency's estimate of the burden (including hours and cost) of the proposed collection of information; (c) ways to enhance the quality, utility, and clarity of the information to be collected; and (d) ways to minimize the burden of the collection of information on respondents, including through the use of automated collection techniques or other forms of information technology.

Comments submitted in response to this notice will be summarized or included in the request for the Office of Management and Budget approval of this information collection. They also will become a matter of public record.

Dated: October 21, 2002.

Madeleine Clayton,

Management Analyst.

[FR Doc. 02–27212 Filed 10–24–02; 8:45 am]

BILLING CODE 3510–07–P

DEPARTMENT OF COMMERCE

Bureau of Industry and Security

Sensors and Instrumentation Technical Advisory Committee; Notice of Partially Closed Meeting

The Sensors and Instrumentation Technical Advisory Committee will meet on November 12, 2002, 9:30 a.m., in the Herbert C. Hoover Building, Room 6087B, 14th Street between Constitution and Pennsylvania Avenues, NW., Washington, DC. The Committee advises the Office of the Assistant Secretary for Export Administration on technical questions that affect the level of export controls applicable to sensors and instrumentation equipment and technology.

Agenda

Public Session

1. Opening remarks and introductions.
2. Presentation of papers and comments by the public.
3. Discussion on Committee's annual report and plan.
4. Report from laser working group.
5. Update on revision of the Militarily Critical Technologies List.
6. Report on thermal imaging licensing initiatives.
7. Comment on revisions to the Export Administratiaon Regulations.
8. Elections of Chairman.

Closed Session

9. Discussion of matters properly classified under Executive Order 12958, dealing with the U.S. export control program and strategic criteria related thereto.

A limited number of seats will be available during the public session of the meeting. Reservations are not accepted. To the extent that time permits, members of the public may present oral statements to the Committee. The public may submit written statements at any time before or after the meeting. However, to facilitate distribution of public presentation materials to the Committee members, the Committee suggests that presenters forward the public presentation materials prior to the meeting date to the following address: Ms. Lee Ann Carpenter, OSIES/EA/BIS *MS*: 3876, U.S. Department of Commerce, 14th St. & Constitution Ave., NW., Washington, DC 20230.

The Assistant Secretary for Administration, with the concurrence of the General Counsel, formally determined on November 29, 2001, pursuant to section 10(d) of the Federal Advisory Committee Act, as amended, that the series of meetings of the Committee and of any subcommittees thereof, dealing with the classified materials listed in 5 U.S.C., 552(c)(1) shall be exempt from the provisions relating to public meetings found in section 10(a)(1) and 10(a)(3), of the Federal Advisory Committee Act. The remaining series of meetings or portions thereof will be open to the public.

For more information contact Lee Ann Carpenter on (202) 482–2583.

Dated: October 22, 2002.

Lee Ann Carpenter,

Commerce Liaison Officer.

[FR Doc. 02–27204 Filed 10–24–02; 8:45 am]

BILLING CODE 3510–JT–M

DEPARTMENT OF COMMERCE

International Trade Administration

[A–570–880]

Notice of Initiation of Antidumping Duty Investigation: Barium Carbonate From the People's Republic of China

AGENCY: Import Administration, International Trade Administration, Department of Commerce.

ACTION: Initiation of antidumping duty investigation.

EFFECTIVE DATE: October 25, 2002.

FOR FURTHER INFORMATION CONTACT: David Layton (202) 482–0371 or Tisha Loeper-Viti (202) 482–7425, Import Administration, International Trade Administration, U.S. Department of Commerce, 14th Street and Constitution Avenue, NW., Washington, DC 20230.

Initiation of Investigations

The Applicable Statute and Regulations

Unless otherwise indicated, all citations to the statute are references to the provisions effective January 1, 1995, the effective date of the amendments made to the Tariff Act of 1930 (the Act) by the Uruguay Round Agreements Act (URAA). In addition, unless otherwise indicated, all citations to the Department of Commerce's (the Department's) regulations are references

to the provisions codified at 19 CFR part 351 (2002).

The Petition

On September 30, 2002, the Department received a petition filed in proper form by Chemical Products Corporation (CPC, or the petitioner). The Department received a supplement to the petition on October 16, 2002.

In accordance with section 732(b)(1) of the Act, the petitioner alleges that imports of barium carbonate from the People's Republic of China (the PRC) are, or are likely to be, sold in the United States at less than fair value within the meaning of section 731 of the Act, and that these imports are materially injuring, or are threatening to materially injure, an industry in the United States.

The Department finds that the petitioner filed this petition on behalf of the domestic industry because it is an interested party as defined in sections 771(9)(C) of the Act, and it has demonstrated sufficient industry support with respect to the antidumping investigation that it is requesting the Department to initiate. *See infra*, ''Determination of Industry Support for the Petition.''

Scope of Investigation

The merchandise covered by this investigation is barium carbonate, regardless of form or grade. The product under investigation is currently classifiable under subheading 2836.60.0000 of the Harmonized Tariff Schedule of the United States (HTSUS). Although the HTSUS subheading is provided for convenience and customs purposes, the written description of the scope of this proceeding is dispositive.

As discussed in the preamble to the Department's regulations (*Antidumping Duties; Countervailing Duties; Final Rule*, 62 FR 27296, 27323 (May 19, 1997)), we are setting aside a period for parties to raise issues regarding product coverage. The Department encourages all parties to submit such comments within 20 calendar days of publication of this notice. Comments should be addressed to Import Administration's Central Records Unit, Room 1870, U.S. Department of Commerce, 14th Street and Constitution Avenue, NW., Washington, DC 20230. The period of scope consultations is intended to provide the Department with ample opportunity to consider all comments and consult with parties prior to the issuance of the preliminary determinations.

Determination of Industry Support for the Petition

Section 732(b)(1) of the Act requires that a petition be filed on behalf of the domestic industry. Section 732(c)(4)(A) of the Act provides that the Department's industry support determination, which is to be made before the initiation of the investigation, be based on whether a minimum percentage of the relevant industry supports the petition. A petition meets this requirement if the domestic producers or workers who support the petition account for: (1) At least 25 percent of the total production of the domestic like product; and (2) more than 50 percent of the production of the domestic like product produced by that portion of the industry expressing support for, or opposition to, the petition. Moreover, section 732(c)(4)(D) of the Act provides that, if the petition does not establish support of domestic producers or workers accounting for more than 50 percent of the total production of the domestic like product, the Department shall either poll the industry or rely on other information in order to determine if there is support for the petition.

Section 771(4)(A) of the Act defines the ''industry'' as the producers of a domestic like product. Thus, to determine whether a petition has the requisite industry support, the statute directs the Department to look to producers and workers who produce the domestic like product. The International Trade Commission (ITC), which is responsible for determining whether ''the domestic industry'' has been injured, must also determine what constitutes a domestic like product in order to define the industry. While both the Department and the ITC must apply the same statutory definition regarding the domestic like product (section 771(10) of the Act), they do so for different purposes and pursuant to a separate and distinct authority. In addition, the Department's determination is subject to limitations of time and information. Although this may result in different definitions of the like product, such differences do not render the decision of either agency contrary to the law.[1]

Section 771(10) of the Act defines the domestic like product as ''a product which is like, or in the absence of like, most similar in characteristics and uses with, the article subject to an investigation under this title.'' Thus, the reference point from which the domestic like product analysis begins is ''the article subject to an investigation,'' *i.e.*, the class or kind of merchandise to be investigated, which normally will be the scope as defined in the petition.

We reviewed the description of the domestic like product presented in the petition. Based upon our review of the petitioner's claims, we concur that there is a single domestic like product, which is defined in the ''Scope of Investigation'' section above. This is consistent with determinations in past investigations to treat all barium carbonate products as a single class or kind of merchandise. *See, e.g., International Trade Commission Notices (No. 731–TA–31 Final): Precipitated Barium Carbonate from the Federal Republic of Germany*, 46 FR 32698 (June 24, 1981).

Finally, the Department has determined that, pursuant to section 732(c)(4)(A) of the Act, the petition contains adequate evidence of industry support and, therefore, polling is unnecessary. *See* the *Import Administration Antidumping Investigation Initiation Checklist, Industry Support section*, October 21, 2002 (the Initiation Checklist), on file in the Central Records Unit, Room B–099 of the main Department of Commerce building.

We determined that the petitioner has demonstrated industry support representing more than 50 percent of total production of the domestic like product. Therefore, the domestic producers or workers who support the petition account for at least 25 percent of the total production of the domestic like product, and the requirements of section 732(c)(4)(A)(i) of the Act are met. Furthermore, because the petitioner represents more than 50 percent of total production of the like product, the domestic producers or workers who support the petition account for more than 50 percent of the production of the domestic like product produced by that portion of the industry expressing support for or opposition to the petition. Thus, the requirements of section 732(c)(4)(A)(ii) are also met. In addition, the Department received no opposition to the petition. Accordingly, we determine that this petition is filed on behalf of the domestic industry within the meaning of section 732(b)(1) of the Act.

Export Price and Normal Value

The following are descriptions of the allegations of sales at less than fair value upon which the Department based its

[1] *See Algoma Steel Corp. Ltd.*, v. *United States*, 688 F. Supp.639, 642–44 (CIT 1988); *High Information Content Flat Panel Displays and Display Glass from Japan: Final Determination; Rescission of Investigation and Partial Dismissal of Petition*, 56 FR 32376, 32380–81 (July 16, 1991).

decision to initiate this investigation. The sources of data relating to U.S. and home market prices and factors of production are discussed in greater detail in the Initiation Checklist. Should the need arise in our preliminary or final determinations to use any of this information as facts available under section 776 of the Act, we may re-examine the information and revise the margin calculations, if appropriate.

Regarding information involving non-market economy countries (NME), the Department presumes, based on the extent of central government control in an NME, that a single dumping margin, should there be one, is appropriate for all NME exporters in the given country. In the course of this investigation, all parties will have the opportunity to provide relevant information related to the issues of the country's NME status and the granting of separate rates to individual exporters. *See, e.g., Final Determination of Sales at Less Than Fair Value: Silicon Carbide from the People's Republic of China*, 59 FR 22585 (May 2, 1994).

Export Price

The petitioner based export price (EP) on price quotes from several Chinese exporters within the period of investigation (POI) for the sale of powdered and calcined barium carbonate produced in the PRC. The petitioner calculated a net U.S. price by deducting inland freight expenses in the PRC using a surrogate value for rail freight in accordance with our NME calculation methodology.

Normal Value

The petitioner alleges that the PRC is an NME country, and notes that in all previous investigations the Department has determined that the PRC is an NME. *See, e.g., Notice of Final Determination in the Less Than Fair Value Investigation of Steel Wire Rope From the People's Republic of China*, 66 FR 12759, 12761 (Feb. 28, 2001). In accordance with section 771(18)(C) of the Act, any determination that a foreign country has at one time been considered an NME shall remain in effect until revoked. Therefore, the PRC will continue to be treated as an NME country unless and until its NME status is revoked. Pursuant to section 771(18)(C)(i) of the Act, because the PRC's status as an NME remains in effect, the petitioner determined the dumping margin using an NME analysis.

The petitioner asserts that India is the most appropriate surrogate country for the PRC, claiming that India is: (1) A market economy; (2) a significant producer of comparable merchandise; and (3) at a level of economic development comparable to that of the PRC in terms of per-capita gross national income. Based on the information provided by the petitioner, we believe that the petitioner's use of India as a surrogate country is appropriate for purposes of initiation of this investigation.

The petitioner estimated the quantities of inputs required to produce powdered and calcinated barium carbonate in the PRC based on the petitioner's own experience and adjusted for known differences in production in the PRC. These known differences include: (1) The use of coal as a fuel source and as a material input to reduce barite ore; (2) the production of carbon dioxide gas by heating limestone; and (3) the use of kerosene to heat the calciner.

For valuing the inputs, the petitioner attempted to use contemporaneous price data for the anticipated POI where it was available. Where this was not the case, the petitioner used information otherwise available as detailed below. The petitioner valued inputs of steam coal, limestone, lime, alum, and flocculant using Indian import statistics recorded for the months of January to June 2001 in the Monthly Statistics of the Foreign Trade of India. Barite ore was valued using a contemporaneous price quote from an Australian producer of barite ore because the petitioner demonstrated that the Indian import statistics value was abberationally high and the petitioner was unable to find an import value for any other possible surrogate country. The values for ferrous sulfate and sodium sulfate were based on the values reported in the publication *Chemical Weekly* for the period January to June 2002. The value for calcium sulfate was based on a publicly available price quote from a price list published on the Internet by Indian Chemical Industries (*see http://www.indian-chemicals.com*). A value for water was based on the average industrial price in four Indian metropolitan areas for the period 1995–1997 as reported in the Second Water Utilities Data Book: Asian and Pacific Region (1997). Electricity was valued using data from the 2001–02 Annual Report on the Working of State Electricity Boards published by the Power and Energy Division of the Planning Commission of India. All surrogate values that fell outside the anticipated POI, January 1, 2002, through June 30, 2002, were adjusted for inflation using sector-specific price indices (for electricity) and wholesale price indices (for all other inputs).

To determine factory overhead, selling, general and administrative (SG&A) expenses, and financial expenses and profit, the petitioner relied on rates derived from the financial statements of National Peroxide Ltd. (NPL) and Calibre Chemicals (CC), which are two Indian producers of bulk chemicals. Based on the information provided by the petitioner, we believe that the surrogate values represent information reasonably available to the petitioner and are acceptable for purposes of initiation of this investigation. Because the Department normally includes only operational income in calculating surrogate profit rates, we reduced NPL's profit rate to zero after deducting non-operational income (from property development) from its overall income.

Based upon a comparison of EP to adjusted normal value (NV), the revised estimated dumping margins range from 214.17 to 308.18 percent.

Fair Value Comparison

Based on the data provided by the petitioner, there is reason to believe that imports of barium carbonate from the PRC are being, or are likely to be, sold at less than fair value.

Allegations and Evidence of Material Injury and Causation

The petitioner alleges that the U.S. industry producing the domestic like product is being materially injured, or is threatened with material injury, by reason of the individual and cumulated imports of the subject merchandise sold at less than NV.

The petitioner contends that the industry's injured condition is evident by a decline in prices, declining profitability, reduced levels of capacity utilization, declining shipments, lost sales and revenue due to PRC imports, and declining market share. The allegations of injury and causation are supported by relevant evidence including ITC import data, lost sales and revenue data, and pricing information. We have assessed the allegations and supporting evidence regarding material injury and causation, and we have determined that these allegations are properly supported by adequate evidence and meet the statutory requirements for initiation. *See* the Initiation Checklist.

Initiation of Antidumping Investigation

Based upon our examination of the petition on barium carbonate, we have found that it meets the requirements of section 732 of the Act. Therefore, we are initiating an antidumping duty investigation to determine whether

imports of barium carbonate from the PRC are being, or are likely to be, sold in the United States at less than fair value. Unless this deadline is extended pursuant to section 733(b)(1)(A) of the Act, we will make our preliminary determination no later than 140 days after the date of this initiation.

Distribution of Copies of the Petition

In accordance with section 732(b)(3)(A) of the Act, a copy of the public version of the petition has been provided to the representative of the government of the PRC. We will attempt to provide a copy of the public version of the petition to each exporter named in the petition, as provided for under 19 CFR 351.203(C)(2).

ITC Notification

We have notified the ITC of our initiation as required by section 732(d) of the Act.

Preliminary Determination by the ITC

The ITC will determine no later than November 14, 2002, whether there is a reasonable indication that imports of barium carbonate from the PRC are causing material injury, or threatening to cause material injury, to a U.S. industry. A negative ITC determination will result in the investigation being terminated; otherwise, this investigation will proceed according to statutory and regulatory time limits.

This notice is issued and published pursuant to section 777(i) of the Act.

Dated: October 21, 2002.

Faryar Shirzad,

Assistant Secretary for Import Administration.

[FR Doc. 02–27261 Filed 10–24–02; 8:45 am]

BILLING CODE 3510–DS–P

DEPARTMENT OF COMMERCE

International Trade Administration

[A–570–853]

Bulk Aspirin from the People's Republic of China: Final Results of Changed Circumstances Review

AGENCY: Import Administration, International Trade Administration, Department of Commerce.

ACTION: Notice of Final Results of Changed Circumstances Antidumping Duty Administrative Review.

SUMMARY: On August 7, 2002, the Department of Commerce published a notice of preliminary results of its changed circumstances review in bulk aspirin from the People's Republic of China examining whether Jilin Henghe Pharmaceutical is the successor-in-interest to Jilin Pharmaceutical Company Ltd. and Jilin Pharmaceutical Import and Export Corporation. We have now completed the changed circumstances review and determine Jilin Henghe Pharmaceutical to be the successor-in-interest to Jilin Pharmaceutical Company Ltd. and Jilin Pharmaceutical Import and Export Corporation.

EFFECTIVE DATE: October 25, 2002.

FOR FURTHER INFORMATION CONTACT: Julie Santoboni or Cole Kyle, Import Administration, International Trade Administration, U.S. Department of Commerce, 14th Street and Constitution Avenue, NW, Washington, DC 20230; telephone (202) 482–4194 and (202) 482–1503, respectively.

SUPPLEMENTARY INFORMATION:

Applicable Statute

Unless otherwise indicated, all citations to the Tariff Act of 1930, as amended (the ''Act''), are references to the provisions effective January 1, 1995, the effective date of the amendments made to the Act by the Uruguay Round Agreements Act. In addition, unless otherwise indicated, all citations to the Department of Commerce's (''the Department's'') regulations are to 19 CFR Part 351 (2001).

Background:

On August 7, 2002, in accordance with Section 751(b) of the Act and 19 CFR 351.216 and 351.221(c)(3), the Department published its preliminary results in the **Federal Register**, preliminarily finding Jilin Henghe Pharmaceutical (''Jilin Henghe'') to be the successor-in-interest to Jilin Pharmaceutical Company Ltd. and Jilin Pharmaceutical Import and Export Corporation (collectively, ''Jilin Pharmaceutical''). We invited interested parties to comment on these findings. No comments were received (*see Bulk Aspirin from the People's Republic of China: Preliminary Results of Antidumping Duty Administrative Review and Changed Circumstances Review*, 67 FR 51167) (''*Preliminary Results*'').

Scope of the Review

The product covered by this review is bulk acetylsalicylic acid, commonly referred to as bulk aspirin, whether or not in pharmaceutical or compound form, not put up in dosage form (tablet, capsule, powders or similar form for direct human consumption). Bulk aspirin may be imported in two forms, as pure ortho-acetylsalicylic acid or as mixed ortho-acetylsalicylic acid. Pure ortho-acetylsalicylic acid can be either in crystal form or granulated into a fine powder (pharmaceutical form). This product has the chemical formula C9H8O4. It is defined by the official monograph of the United States Pharmacopoeia 23 (''USP''). It is currently classifiable under the *Harmonized Tariff Schedule of the United States* (''HTSUS'') subheading 2918.22.1000.

Mixed ortho-acetylsalicylic acid consists of ortho-acetylsalicylic acid combined with other inactive substances such as starch, lactose, cellulose, or coloring materials and/or other active substances. The presence of other active substances must be in concentrations less than that specified for particular nonprescription drug combinations of aspirin and active substances as published in the *Handbook of Nonprescription Drugs*, eighth edition, American Pharmaceutical Association. This product is currently classifiable under HTSUS subheading 3003.90.0000.

Although the HTSUS subheadings are provided for convenience and customs purposes, the written description of the merchandise under review is dispositive.

Final Results of Review

Because we received no comments on the preliminary results, for the reasons stated in the *Preliminary Results* and based on the facts on the record, we find Jilin Henghe to be the successor-in-interest to Jilin Pharmaceutical for antidumping duty cash deposit purposes. In order to make this determination, we examined the management structure of Jilin Henghe and Jilin Pharmaceutical, including, but not limited to, financial statements, stock purchase agreements, sales documents and organizational charts. Since the record shows that Jilin Henghe maintained the same management among other things, we determine that Jilin Henghe is the successor-in-interest to Jilin Pharmaceutical.

Jilin Henghe will be assigned the same antidumping duty cash-deposit rate with respect to the subject merchandise as Jilin Pharmaceutical, its predecessor company. This cash deposit requirement will be effective upon publication of this notice of final results of changed circumstances review for all shipments of the subject merchandise entered, or withdrawn from warehouse, for consumption on or after the publication date. This cash deposit rate shall remain in effect until publication of the final results of the next administrative review.

This determination is issued and published in accordance with sections 751(b)(1) and 777(I)(1) of the Act.

Dated: October 18, 2002.

Joseph A. Spetrini,

Acting Assistant Secretary for Import Administration.

[FR Doc. 02–27259 Filed 10–24–02; 8:45 am]

BILLING CODE 3510–DS–S

DEPARTMENT OF COMMERCE

International Trade Administration

[A–533–809]

Forged Stainless Steel Flanges from India: Extension of Time Limit for Preliminary Results of Antidumping Duty Administrative Review

AGENCY: Import Administration, International Trade Administration, Department of Commerce.

ACTION: Notice of Extension of Time Limit for Preliminary Results of Antidumping Duty Administrative Review.

EFFECTIVE DATE: October 25, 2002.

FOR FURTHER INFORMATION CONTACT: Helen Kramer at (202) 482–0405 (Snowdrop Trading, Pvt. Ltd.), Michael Ferrier at (202) 482–1394 (Isibars, Ltd.) Shireen Pasha at (202) 482–0193 (Echjay Forgings Ltd./Pushpaman Exports), or Dena Aliadinov at (202) 482–3362 (Viraj Forgings, Ltd.), Import Administration, International Trade Administration, U.S. Department of Commerce, 14th Street and Constitution Ave, NW, Washington, DC 20230.

SUPPLEMENTARY INFORMATION:

Statutory Time Limits

Section 751(a)(3)(A) of the Tariff Act of 1930, as amended (''the Act''), requires the Department of Commerce (''the Department'') to make a preliminary determination within 245 days after the last day of the anniversary month of an order for which a review is requested, and a final determination within120 days after the date on which the preliminary determination is published. However, if it is not practicable to complete the review within these time periods, section 751(a)(3)(A) of the Act allows the Department to extend the time limit for the preliminary determination to a maximum of 365 days and for the final determination to 180 days (or 300 days if the Department does not extend the time limit for the preliminary determination) from the date of publication of the preliminary determination.

Background

On March 27, 2002, the Department initiated an administrative review of the antidumping duty order on forged stainless steel flanges from India for the following companies: Metal Forging Rings & Bearings; Snowdrop Trading, Pvt. Ltd.; Viraj Group; Bhansali Ferromet Pvt. Ltd.; Echjay Forgings Ltd./ Pushpaman Exports; Isibars, Ltd.; Panchmahal Steel, Ltd.; Patheja Forgings & Auto Parts, Ltd.; and Viraj Forgings, Ltd. *See Initiation of Antidumping and Countervailing Duty Administrative Reviews and Requests for Revocations in Part*, 67 FR 14696 (March 27, 2002). The Department received timely responses from Snowdrop Trading, Pvt. Ltd. (''Snowdrop''); Echjay Forgings Ltd./ Pushpaman Exports (''Echjay''); Isibars, Ltd. (''Isibars''); and Viraj Forgings, Ltd. (''Viraj'') (Viraj is part of the Viraj Group). The period of review (POR) is February 1, 2001, through January 31, 2002. The preliminary results are currently due on October 31, 2002.

Extension of Time Limit for Preliminary Results of Review

The instant review involves procedural difficulties that necessitate a greater amount of time in order to preliminarily complete this review, including the number of companies under review; the inability of one of the companies to meet the Department's deadlines for responses to the questionnaire due to a natural disaster; the delay in obtaining financial statements because the companies' fiscal years ends in March; the lack of legal representation for two companies; and the involvement of two of the companies under review in simultaneous antidumping proceedings. Because of these issues, we find it is not practicable to complete this review within the initial time limits mandated by section 751(a)(3)(A) of the Act. Therefore, we are fully extending the due date for the preliminary results to 365 days after the last day of the anniversary month of the antidumping order, which is February 28, 2003. The final results will continue to be 120 days after the date the preliminary results are issued.

This extension of the time limit is in accordance with section 751(a)(3)(A) of the Act and 19 CFR 351.213(h)(2).

Dated: October 18, 2002.

Joseph A. Spetrini,

Deputy Assistant Secretary for Import Administration, Group III.

[FR Doc. 02–27260 Filed 10–24–02; 8:45 am]

BILLING CODE 3510–DS–S

CONSUMER PRODUCT SAFETY COMMISSION

Sunshine Act Meeting

TIME AND DATE: Friday, November 1, 2002, 10 a.m.

LOCATION: Room 420, East West Towers, 4330 East West Highway, Bethesda, Maryland.

STATUS: Open to the Public.

MATTER TO BE CONSIDERED:

Petition to HP 99–1 Polyvinyl Chloride (PVC) (Decision)

The Commission will consider options relating to Petition to HP 99–1 requesting ban of polyvinyl chloride (PVC) in all toys and other products intended for children five years of age and under.

For a recorded message containing the latest agenda information, call (301) 504–0709.

CONTACT PERSON FOR ADDITIONAL INFORMATION: Todd A. Stevenson, Office of the Secretary, 4330 East West Highway, Bethesda, MD 20207, (301) 504–0800.

Dated: October 23, 2002.

Todd A. Stevenson,

Secretary.

[FR Doc. 02–27410 Filed 10–23–02; 2:35 pm]

BILLING CODE 6355–01–M

DEPARTMENT OF EDUCATION

Notice of Proposed Information Collection Requests

AGENCY: Department of Education.

SUMMARY: The Leader, Regulatory Information Management Group, Office of the Chief Information Officer, invites comments on the proposed information collection requests as required by the Paperwork Reduction Act of 1995.

DATES: Interested persons are invited to submit comments on or before December 24, 2002.

SUPPLEMENTARY INFORMATION: Section 3506 of the Paperwork Reduction Act of 1995 (44 U.S.C. Chapter 35) requires that the Office of Management and Budget (OMB) provide interested Federal agencies and the public an early opportunity to comment on information collection requests. OMB may amend or waive the requirement for public consultation to the extent that public participation in the approval process would defeat the purpose of the information collection, violate State or Federal law, or substantially interfere with any agency's ability to perform its statutory obligations. The Leader,

Regulatory Information Management Group, Office of the Chief Information Officer, publishes that notice containing proposed information collection requests prior to submission of these requests to OMB. Each proposed information collection, grouped by office, contains the following: (1) Type of review requested, *e.g.* new, revision, extension, existing or reinstatement; (2) Title; (3) Summary of the collection; (4) Description of the need for, and proposed use of, the information; (5) Respondents and frequency of collection; and (6) Reporting and/or Recordkeeping burden. OMB invites public comment. The Department of Education is especially interested in public comment addressing the following issues: (1) Is this collection necessary to the proper functions of the Department; (2) will this information be processed and used in a timely manner; (3) is the estimate of burden accurate; (4) how might the Department enhance the quality, utility, and clarity of the information to be collected; and (5) how might the Department minimize the burden of this collection on the respondents, including through the use of information technology.

Dated: October 22, 2002.

John Tressler,

Leader, Regulatory Information Management, Office of the Chief Information Officer.

Office of Educational Research and Improvement

Type of Review: Revision of a currently approved collection.

Title: National Assessment of Educational Progress: 2003 Charter Schools Questions.

Frequency:

Affected Public: Not-for-profit institutions (primary).

Reporting and Recordkeeping Hour Burden:

Responses: 658800.

Burden Hours: 169101.

Abstract: The charter schools in the NAEP sample will complete the NAEP School Questionnaire, through which they will provide information on instructional organization and time, parental involvement, stability of the teaching staff, and characteristics of the student body. The purpose of the NAEP Charter School Questions is to be able to describe the schools in terms of some key features unique to charter schools. There is no one kind of charter school—who they serve, how they are funded, how they operate, and to whom they must report varies depending on state legislation and the terms of the charter. Nevertheless, it is important for NAEP to be able to describe the charter schools in the sample so that the results can be interpreted in a meaningful way.

Requests for copies of the proposed information collection request may be accessed from *http://edicsweb.ed.gov,* by selecting the Browse Pending Collections link and by clicking on link number 2176. When you access the information collection, click on ''Download Attachments'' to view. Written requests for information should be addressed to Vivian Reese, Department of Education, 400 Maryland Avenue, SW., Room 4050, Regional Office Building 3, Washington, DC 20202–4651 or to the e-mail address *vivian_reese@ed.gov*. Requests may also be electronically mailed to the Internet address *OCIO__RIMG@ed.gov* or faxed to (202) 708–9346. Please specify the complete title of the information collection when making your request.

Comments regarding burden and/or the collection activity requirements should be directed to Kathy Axt at (540) 776–7742. Individuals who use a telecommunications device for the deaf (TDD) may call the Federal Information Relay Service (FIRS) at 1–800–877–8339.

[FR Doc. 02–27191 Filed 10–24–02; 8:45 am]

BILLING CODE 4000–01–P

DEPARTMENT OF ENERGY

Final Environmental Impact Statement for a Geologic Repository for the Disposal of Spent Nuclear Fuel and High-Level Radioactive Waste at Yucca Mountain, Nye County, NV

AGENCY: Department of Energy.

ACTION: Notice of Distribution.

SUMMARY: The Department of Energy (DOE) announces the distribution and availability of the Final Environmental Impact Statement for a Geologic Repository for the Disposal of Spent Nuclear Fuel and High-Level Radioactive Waste at Yucca Mountain, Nye County, Nevada (DOE/EIS–0250F) in paper and CD ROM format. The Nuclear Waste Policy Act of 1982, as amended (NWPA) (42 U.S.C. 10101 *et seq.*) requires that any recommendation from the Secretary of Energy to the President that the President approve the Yucca Mountain site for the development of a repository must include a final environmental impact statement (EIS). Accordingly, the Department prepared this Final EIS consistent with the NWPA, the National Environmental Policy Act of 1969 (NEPA) (42 U.S.C. 4321 *et seq.*), the Council on Environmental Quality (CEQ) regulations that implement the procedural provisions of NEPA (40 CFR parts 1500–1508), and the DOE procedures implementing NEPA (10 CFR part 1021). The Final EIS has been filed with the U.S. Environmental Protection Agency. The Final EIS provides information on potential environmental impacts that could result from a Proposed Action to construct, operate and monitor, and eventually close a repository for the disposal of spent nuclear fuel and high-level radioactive waste at Yucca Mountain in Nevada, including potential impacts from transporting spent nuclear fuel and high-level radioactive waste to the repository. The Final EIS also considers the potential environmental impacts from an alternative referred to as the No-Action Alternative, under which a repository would not be developed at Yucca Mountain.

DATES: The Final EIS accompanied the Secretary of Energy's recommendation to the President regarding the suitability of the Yucca Mountain site for the development of a geologic repository on February 14, 2002, and was made available to the public electronically on the Internet and in public reading rooms at that time, pursuant to the NWPA. On February 15, 2002, the President transmitted his recommendation of the site to Congress. After the State of Nevada submitted a notice of disapproval on April 8, 2002, the U.S. House of Representatives and the Senate passed a resolution to approve the site on May 8 and July 9, 2002 respectively. The President signed the resolution approving the site on July 23, 2002.

ADDRESSES: Written requests for further information on the Final EIS, and requests for paper copies of the document (or a CD–ROM version) should be directed to: Dr. Jane Summerson, EIS Document Manager, M/S 010, U.S. Department of Energy, Office of Civilian Radioactive Waste Management, Yucca Mountain Site Characterization Office, P.O. Box 364629, North Las Vegas, Nevada 89036–8629, Telephone 1–800–225–6972, Facsimile 1–800–967–0739.

The Final EIS is available electronically on the Internet at *www.ymp.gov* and will also be available on the DOE NEPA Web site at *http://tis.eh.doe.gov/nepa/.* Addresses of the locations where paper copies of the Final EIS are available for public review are listed in this Notice in the **SUPPLEMENTARY INFORMATION** section under ''Distribution and Availability of the Final EIS.''

FOR FURTHER INFORMATION CONTACT: Dr. Jane Summerson, EIS Document Manager, M/S 010, U.S. Department of

Energy, Office of Civilian Radioactive Waste Management, Yucca Mountain Site Characterization Office, P.O. Box 364629, North Las Vegas, Nevada 89036–8629, Telephone 1–800–225–6972, Facsimile 1–800–967–0739.

General information on the DOE NEPA process may be requested from: Ms. Carol M. Borgstrom, Director, Office of NEPA Policy and Compliance (EH–42), U.S. Department of Energy, 1000 Independence Ave., SW., Washington, DC 20585, Telephone 1–202–586–4600, or leave a message at 1–800–472–2756.

SUPPLEMENTARY INFORMATION:

Background

On August 7, 1995, the Department published a Notice of Intent (60 FR 40164) to prepare an Environmental Impact Statement for a Geologic Repository for the Disposal of Spent Nuclear Fuel and High-Level Radioactive Waste at Yucca Mountain, Nye County, Nevada. The purpose of the Notice of Intent was to inform the public of the proposed scope of the Repository EIS, to solicit public input, and to announce that scoping meetings would be held from August through October 1995. During that period 15 public scoping meetings were held throughout the United States to obtain public comments regarding the scope, alternatives, and issues that should be addressed in the EIS. The scoping period closed on December 5, 1995. In May 1997, DOE published the Summary of Public Scoping Comments Related to the Environmental Impact Statement for a Geologic Repository for the Disposal of Spent Nuclear Fuel and High-level Radioactive Waste at Yucca Mountain, Nye County, Nevada, which summarized the comments received by DOE during the scoping process and described how DOE planned at that time to address issues raised during scoping. A Notice of Availability for the Summary of Public Scoping Comments document was published on July 9, 1997 (62 FR 36789).

On August 13, 1999, DOE published a notice in the **Federal Register** announcing the availability of the Draft Environmental Impact Statement (64 FR 44200). The comment period for the Draft EIS was 199 days, with 21 public hearings conducted nationally and in the State of Nevada. On May 4, 2001, DOE published a notice in the **Federal Register** announcing the availability of a Supplement to the Draft Environmental Impact Statement (66 FR 22540). The comment period for the Supplement to the Draft EIS was 57 days, with 3 public hearings conducted in the State of Nevada.

Alternatives Considered

The Final EIS evaluates a Proposed Action and a No-Action Alternative. Under the Proposed Action, DOE would construct, operate and monitor, and eventually close a geologic repository at Yucca Mountain for the disposal of as much as 70,000 metric tons of spent nuclear fuel and high-level radioactive waste. The Proposed Action includes the transportation of spent nuclear fuel and high-level radioactive waste to Yucca Mountain from commercial and DOE sites. Under the No-Action Alternative, DOE would end activities at Yucca Mountain, and commercial and DOE sites would continue to store spent nuclear fuel and high-level radioactive waste, packaged as necessary for their safe on-site management.

Two national transportation scenarios are evaluated in the Final EIS. The mostly legal-weight truck [1] scenario assumes that, with a few exceptions, spent nuclear fuel and high-level radioactive waste would be shipped to the repository by legal-weight truck over existing highways. The mostly rail scenario assumes that spent nuclear fuel and high-level radioactive waste would be shipped to Nevada by rail, with some exceptions (based largely on the on-site loading limitations at some commercial sites).

The Nevada transportation implementing alternatives parallel the national transportation scenarios. However, because no rail access currently exists to the repository site, the EIS considers different implementing alternatives for the construction of either a new branch rail line to the proposed repository, or an intermodal transfer station [2] with associated highway routes for heavy-haul trucks.[3]

Under the No-Action Alternative, DOE would end activities at Yucca Mountain and undertake site reclamation to mitigate adverse environmental impacts from those activities. The commercial nuclear power utilities and DOE would continue to store spent nuclear fuel and high-level radioactive waste. Because it would be highly speculative to attempt to predict future events, DOE decided to illustrate that set of possibilities by focusing its analysis of the No-Action Alternative on the potential impacts of two scenarios. Scenario 1 assumes that spent nuclear fuel and high-level radioactive waste would remain at the 72 commercial and 5 DOE sites under institutional control for at least 10,000 years. Scenario 2 also assumes that spent nuclear fuel and high-level radioactive waste would remain at the 77 sites in perpetuity, but under institutional control for only about 100 years.

Final EIS

The Final EIS differs from the Draft EIS and Supplement in several respects. Changes were made in the Final EIS in response to comments on the Draft EIS and Supplement, to correct errors in the Draft EIS and Supplement, and to provide new information or improved analyses relevant to the Final EIS. The Final EIS includes the Readers Guide and Summary; Volume I—Impact Analyses (Chapters 1–15); Volume II—Appendices A–O; and Volume III—Comment Response Document (Parts 1–4). In addition, Volume IV contains information regarding transportation and repository accident scenarios, and is only available as discussed below. Included with the Final EIS is an errata sheet, which describes errors in the Final EIS identified by DOE after the EIS was approved in February 2002. These errors have been considered both individually and collectively, and DOE has determined that no errors identified would cause a significant change to the environmental impacts, nor would they change the conclusions reached in the Final EIS.

The Final EIS evaluates (1) the potential impacts of the construction, operation and monitoring, and eventual closure of a repository; (2) the potential long-term impacts of repository disposal of spent nuclear fuel and high-level radioactive waste; (3) the potential impacts of transporting these materials to the repository; and (4) the potential impacts of not proceeding with a repository. The Final EIS identifies the Department's preferred alternative, which is to proceed with the proposed action to construct, operate and monitor, and eventually close a repository at Yucca Mountain, and to use mostly rail, both nationally and in Nevada, to transport spent nuclear fuel and high-level radioactive waste to the repository.

Distribution and Availability of the Final EIS

Paper copies of the Readers Guide and Summary and the errata sheet, and a CD-ROM of the Final EIS (Volumes I, II,

[1] Truck with a gross vehicle weight (both truck and cargo) of less than 80,000 pounds.

[2] An intermodal transfer station is a facility at the juncture of rail and road transportation used to transfer shipping casks containing spent nuclear fuel and high-level radioactive waste from rail to truck and empty casks from truck to rail.

[3] Shipment of a rail cask (weighing up to 300,000 pounds) on a special truck and trailer combination that would have a total weight of approximately 500,000 pounds.

and III), were distributed to Members of Congress, Federal, State, and Indian tribal governments, local officials, persons, agencies, and organizations who commented on the Draft EIS and Supplement to the Draft EIS, and others who have indicated an interest in the EIS process. Paper copies of the 5,000-page Final EIS may also be requested as indicated previously in the **ADDRESSES** and **FOR FURTHER INFORMATION CONTACT** sections of this notice. However, in light of the events of September 11, 2001, Volume IV is available only upon written request to the DOE EIS Document Manager at the address provided in the **ADDRESSES** section. The Final EIS is available electronically on the Internet at *www.ymp.gov*, and will also be available on the DOE NEPA Web site at *http://tis.eh.doe.gov/nepa/*. Addresses of Public Reading Rooms and libraries where the Final EIS is available for public review are listed below. Copies of references considered in preparation of the Final EIS are available at the following Public Reading Rooms: University of Nevada–Las Vegas, Nevada; University of Nevada–Reno, Nevada; Beatty Yucca Mountain Science Center, Nevada; and the DOE Headquarters Office in Washington, DC.

The Environmental Protection Agency has published a separate Notice of Availability of the Final EIS.

Public Reading Rooms

California

Inyo County—Contact: Andrew Remus; (760) 878–0447; Inyo County Yucca Mountain Repository Assessment Office; 168 North Edwards Street; Post Office Drawer L; Independence, CA 93526.

Oakland Operations Office—Contact: Judy Weiss; (510) 637–1762; U. S. Department of Energy Public Reading Room; EIC; 1301 Clay Street, Room 700N; Oakland, CA 94612–5208.

Colorado

National Renewable Energy Laboratory—Contact: John Horst; (303) 275–4709; Public Reading Room; 1617 Cole Boulevard; Building 17–4; Golden, CO 80401.

Rocky Flats Public Reading Room—Contact: Gary Morell; (303) 469–4435; College Hill Library; 3705 112th Avenue; Westminster, CO 80030.

DOE Headquarters

Headquarters Office—Contact: Carolyn Lawson; (202) 586–3142; U.S. Department of Energy; Room 1E–190, Forrestal Building; 1000 Independence Avenue, SW; Washington, DC 20585.

Georgia

Atlanta Support Office—Contact: Ron Henderson; (404) 562–0555; Department of Energy; Public Reading Room; 75 Spring Street, Suite 200; Atlanta, GA 30303.

Southeastern Power Administration—Contact: Joel W. Seymour; (706) 213–3810; U.S. Department of Energy; Reading Room; 1166 Athens Tech Road; Elberton, GA 30635–6711.

Idaho

Boise State University Library—Contact: Elaine Watson; (208) 426–1737; Government Documents; 1910 University Drive; Boise, ID 83725–1430.

Idaho Operations Office—Contact: Brent Jacobson; (208) 526–1144; U.S. DOE Public Reading Room; 1776 Science Center Drive M/S 2300; Idaho Falls, ID 83415.

Illinois

Chicago Operations Office—Contact: Tiffany Fotno; (312) 996–2738; Document Department; University of Illinois at Chicago; 801 South Morgan Street M/C 234; Chicago, IL 60680.

Louisiana

Strategic Petroleum Reserve Project Management Office—Contact: Deanna Harvey (FE 445); (504) 734–4316; U.S. Department of Energy; SPRPMO Reading Room; 900 Commerce Road, East; New Orleans, LA 70123.

Nevada

Lander County—Contact: Mickey Yarbro; (775) 635–2885; 315 S. Humboldt Street, Battle Mountain, NV 89820.

Beatty Yucca Mountain Science Center—Contact: Marina Anderson; (775) 553–2130; 100 North E Avenue; Beatty, NV 89003.

Lincoln County—Contact: Lola Stark; (775) 726–3511; Box 1068 100 Depot Avenue, Suite 15; Caliente, NV 89008.

Nevada State Clearinghouse—Contact: Heather Elliot; (775) 684–0209; Department of Administration; 209 Musser Street, Room 200; Carson City, NV 89701.

White Pine County—Contact: Josie Larson; (775) 289–2033; Nuclear Waste Project Office; 959 Campton Street; Ely, NV 89301.

Eureka County—Contact: Leonard Fiorenzi; (775) 237–5372; Eureka County Public Works; 701 South Main St.; Eureka, NV 89301.

Churchill County—Contact: Alan Kalt; (775) 428–0212; 155 North Taylor Street, Suite 182; Fallon, NV 89046–2478.

Esmeralda County—Contact: George McCorkell; (775) 485–3419; Yucca Mountain Public Information Center; 105 S. Main Street; Goldfield, NV 89013.

Mineral County—Contact: Linda Mathius; (775) 945–2484; First & A Streets; Hawthorne, NV 89415.

Clark County—Contact: Irene Navis; (702) 455–5129; 500 South Grand Central Parkway #3012; Las Vegas, NV 89106.

Las Vegas, Nevada—Contact: Susie Skarl; (702) 895–2200; University of Nevada Las Vegas; Lied Library; 4505 Maryland Parkway; Las Vegas, NV 89154–7039.

Las Vegas Yucca Mountain Science Center—Contact: Claire Whetsel; (702) 295–1312; 4101–B Meadows Lane; Las Vegas, NV 89107.

Nye County—Contact: Les Bradshaw; (775) 727–7727; Department of Natural Resources and Federal Facilities; 1210 E. Basin Avenue, Suite 6; Pahrump, NV 89060.

Pahrump Yucca Mountain Science Center—Contact: John Pawlak; (775) 727–0896; 1141 South Highway 160, Suite #3; Pahrump, NV, 89041.

Reno, Nevada—Contact: Patrick Ragains; (775) 784–6500, Ext. 309; University of Nevada, Reno; The University of Nevada Libraries; Business and Government Information Center M/S 322; 1664 N. Virginia Street; Reno, NV 89557–0044.

New Mexico

University of New Mexico—Contact: Dave Baldwin; (505) 277–5441; U.S. DOE Contract Reading Room; Zimmerman Library; Albuquerque, NM 87131–1466.

Ohio

Fernald Area Office—Contact: Diana Rayer; (513) 648–7480; U.S. Department of Energy; Public Information Room; 10995 Hamilton Cleves Highway, M/S 78; Harrison, OH 45030.

Oklahoma

National Energy Technology Lab, National Petroleum Technology Office—Contact: Bernadette Ward; (918) 699–2033; U.S. Department of Energy; 1 Williams Tower I, West 3rd Street, Suite 1400; Tulsa, OK 74103.

Southwestern Power Administration—Contact: Marti Ayres; (918) 595–6609; U.S. Department of Energy; Public Reading Room; 1 West 3rd, Suite 1600; Tulsa, OK 74103–3519.

Oregon

Bonneville Power Administration—Contact: Bill Zimmerman; (503) 230–7334; U.S. Department of Energy; BPA–C–ILL–1; 905 NE 11th Street; Portland, OR 97232.

Pennsylvania

Pittsburgh Energy Technology Center—Contact: Ann C. Dunlap; (412) 386–6167; U.S. Department of Energy; Building 922/M210; Cochrans Mill Road; Pittsburgh, PA 15236–0940.

South Carolina

Savannah River Operations Office—Contact: Pauline Conner; (803) 725–1408; Gregg-Graniteville Library; University of South Carolina-Aiken; 171 University Parkway; Aiken, SC 29801.

University of South Carolina—Contact: William Suddeth; (803) 777–4841; Thomas Cooper Library; Documents/Microforms Department; Green and Sumter Streets; Columbia, SC 29208.

Tennessee

Oak Ridge Operations Office—Contact: Walter Perry; (865) 241–4780; U.S. Department of Energy; 475 Oakridge Turnpike; Oak Ridge, TN 37830.

Texas

Southern Methodist University—Contact: Joseph Milazzo; (214) 768–2561; Fondren Library East; Government Information; 6414 Hilltop Lane, Room 102; Dallas, TX 75275.

Utah

University of Utah—Contact: Walter Jones; (801) 581–8863; Marriott Library Special Collections; 295 South 15th East; Salt Lake City, UT 84112–0860.

Washington

Richland Operations Center—Contact: Terri Traub; (509) 372–7443; U.S. Department of Energy; Public Reading Room; 2770 University Drive; Room 101L; Mailstop H2–53; Richland, WA 99352.

Issued in Washington, DC, October 11, 2002.

Margaret S. Y. Chu,

Director, Office of Civilian Radioactive Waste Management.

[FR Doc. 02–27207 Filed 10–24–02; 8:45 am]

BILLING CODE 6450–01–P

DEPARTMENT OF ENERGY

Office of Science Financial Assistance Program Notice 03–06: Human Genome Program—Ethical, Legal, and Social Implications

AGENCY: Department of Energy.

ACTION: Notice inviting grant applications.

SUMMARY: The Office of Biological and Environmental Research (OBER) of the Office of Science (SC), U.S. Department of Energy (DOE), hereby announces its interest in receiving applications in support of the Ethical, Legal, and Social Implications (ELSI) subprogram of the Human Genome Program (HGP). Applications should focus on issues of: (1) Genetics and the workplace, and (2) complex or multigenic traits. This particular research notice invites research applications that address ethical, legal, and social implications resulting from the use of information and knowledge resulting from the HGP. This notice is part of a transition towards a wider societal implications activity in OBER, linked to the Genomes to Life program and no longer focusing principally on human genomics.

DATES: Potential applicants are strongly encouraged to submit a brief preapplication. All preapplications, referencing Program Notice 03–06, should be received by 4:30 p.m., E.S.T., November 25, 2002. Early submissions are encouraged. A response discussing the potential program relevance and encouraging or discouraging a formal application generally will be communicated within 20 days of receipt.

Formal applications submitted in response to this notice must be received by 4:30 p.m., E.S.T., February 13, 2003, to be accepted for merit review and to permit timely consideration for award in Fiscal Year 2003.

ADDRESSES: Preapplications, referencing Program Notice 03–06, should be sent to: Dr. Daniel W. Drell, Office of Biological and Environmental Research, SC–72/Germantown Building, U.S. Department of Energy, 1000 Independence Avenue, SW., Washington, DC 20585–1290.

Formal applications in response to this solicitation are to be electronically submitted by an authorized institutional business official through DOE's Industry Interactive Procurement System (IIPS) at: *http://e-center.doe.gov/.* IIPS provides for the posting of solicitations and receipt of applications in a paperless environment via the Internet. In order to submit applications through IIPS your business official will need to register at the IIPS website. The Office of Science will include attachments as part of this notice that provide the appropriate forms in PDF fillable format that are to be submitted through IIPS. Color images should be submitted in IIPS as a separate file in PDF format and identified as such. These images should be kept to a minimum due to the limitations of reproducing them. They should be numbered and referred to in the body of the technical scientific application as Color image 1, Color image 2, etc. Questions regarding the operation of IIPS may be e-mailed to the IIPS Help Desk at: *HelpDesk@e-center.doe.gov* or you may call the help desk at: (800) 683–0751. Further information on the use of IIPS by the Office of Science is available at: *http://www.sc.doe.gov/production/grants/grants.html.* The full text of Program Notice 03–06 is available via the Internet using the following web site address: *http://www.sc.doe.gov/production/grants/grants.html.*

If you are unable to submit an application through IIPS please contact the Grants and Contracts Division, Office of Science at (301) 903–5212 in order to gain assistance for submission through IIPS or to receive special approval and instructions on how to submit printed applications.

FOR FURTHER INFORMATION CONTACT: Dr. Daniel W. Drell, Office of Biological and Environmental Research, SC–72/Germantown Building, Office of Science, U.S. Department of Energy, 1000 Independence Avenue, SW., Washington, DC 20585–1290, telephone: (301) 903–6488 or e-mail: *daniel.drell@science.doe.gov.*

SUPPLEMENTARY INFORMATION: The DOE encourages the submission of applications that will address, analyze, or anticipate ELSI issues associated with human genome research in two broad areas:

I. Genetics and the Workplace

Research is encouraged on the uses, impacts, implications of, and privacy of genetic and other disease-related information in the workplace. A particular emphasis of this solicitation is screening and monitoring programs that involve the collection and evaluation of worker genetic information. Examples might include surveillance programs (involving asymptomatic screening or testing) for exposure to workplace hazards (*e.g.*, beryllium or other metals), or how testing results might influence policy formulation in the absence of definitive associations between test results and health outcomes. Research is also encouraged on the use of the workplace as a research venue and the resulting challenges for Institutional Review Boards (IRBs) that are responsible for the oversight of such activities. Research could explore historical experiences, current practices, international practices, the economics of, and lessons learned as they pertain to the collection and use of worker screening test information. Research can include issues arising from the creation, use,

maintenance, privacy, and disclosure of genetic and/or medical information obtained in workplace settings that can include, but are not limited to, workplaces at which DOE activities are taking place or have in the past. The final product should lead to best practices guidance or suggestions for policy relevant recommendations.

II. Complex or Multigenic Traits

Research is encouraged that addresses the ethical, legal, and societal implications of advances in the scientific understanding of complex or multi-genic characteristics and conditions, (*e.g.*, gene-environment interactions), that result in diseases or disease susceptibilities. Conditions may include, but are not limited to, behavioral conditions, diseases of aging, vulnerability to substance abuse, susceptibility to workplace exposure hazards (chemicals or radiation), or other common conditions with a partial genetic basis. This research may address:

(1) Studies that explore the novel ethical, legal, and social issues raised by research on, and new insights into, complex conditions.

(2) The responses of institutions (*e.g.*, courts, employers, financial institutions, companies or company health officers, schools, etc., including Federal Agencies) that must deal with ''genetic uncertainty,'' (*e.g.*, uncertainty about the significance of results of screening for susceptibility genes, uncertainty about the role of yet-undefined environmental influences, and uncertainty about the implications of different alleles at highly polymorphic genes when those alleles are not fully characterized).

All applications should demonstrate knowledge of the relevant literature, any related completed activities, and should include detailed plans for the gathering and analysis of factual information and the associated ethical, legal, and social implications. All applications should include, where appropriate, detailed discussion of human subjects protection issues, (*e.g.*, storage of, manipulation of, and access to personal genetic data). Provisions to ensure the inclusion of women, minorities, and potentially disabled individuals must be described, unless specific exclusions are scientifically necessary and justified in detail. All proposed research applications should provide a plan for rigorous assessments to evaluate progress or outcomes. Where a product (guidelines, recommendations, documents, etc.) is the result, dissemination plans including timelines must be discussed. All applications should include letters of agreement to collaborate from potential collaborators; these letters should specify the contributions the collaborators intend to make if the application is accepted and funded.

In previous solicitations in this program, a focus on educational efforts for specific groups was included. Here, applications for the development and dissemination of educational materials will *not* be considered in order that OBER can encourage as high priorities those projects that address the explicitly stated goals of this solicitation.

DOE does *not* encourage applications dealing with issues consequent to the initiation or implementation of genetic testing protocols. Also, DOE does not encourage survey-based research, unless a compelling case is made that this methodology is critical to address an issue of uncommon significance. Applications for the writing of scholarly publications or books should include justifications for the relevance of the publications or books, to the goals of this notice, as well as discussion of the estimated readership and impact. DOE ordinarily will not provide unlimited support for a funded program and thus strongly encourages the inclusion of plans for transition to self-sustaining status.

Additional Request for Small Grants

The DOE also encourages small grant applications, to a maximum of $33,000 total costs, for innovative and exploratory activities within the previously described areas. Such exploratory grants could be used to carry out pilot or investigative research on an issue consistent with any of the above areas of ELSI research, support a sabbatical leave to organize and hold a conference, or to initiate start-up studies that could generate preliminary data for a subsequent grant application. This program could be appropriate for a research scientist interested in exploring a related area of ELSI research, or a scholar conducting ELSI research of one type to explore an ELSI research topic of a different type. Such applications must use the standard DOE application forms which can be found on the Internet at: *http://www.sc.doe.gov/production/grants/grants.html,* but the description of research activities should not be more than five pages and curriculum vitae should not exceed two pages. These small grants, which will be peer reviewed, will not extend beyond one year from the award date. It is expected that up to five of these awards might be made in Fiscal Year 2003. As with larger applications to this notice, applications are required to be submitted electronically through the IIPS.

Program Funding

It is anticipated that approximately $600,000 will be available for multiple grant awards (including any small grants) to be made during Fiscal Year 2003, contingent upon the availability of appropriated funds. Multiple year funding of grant awards is expected, and is also contingent upon the availability of funds. Previous awards have ranged from $50,000 per year up to $500,000 per year with terms from one to three years; most awards average about $200,000 per year for two or three years (not applicable for any small grants as stated above.) Similar award sizes are anticipated for new grants. Generally, conference awards do not exceed $25,000 and indirect costs are not allowed as part of conference grant awards.

Collaboration

Applicants are encouraged to collaborate with researchers in other institutions, such as universities, DOE National Laboratories, industry, non-profit organizations, other federal laboratories and federally funded research and development centers (FFRDCs), where appropriate, and to incorporate cost sharing and/or consortia wherever feasible. Additional information on collaboration is available in the Application Guide for the Office of Science Financial Assistance Program that is available via the Internet at: *http://www.sc.doe.gov/production/grants/Colab.html.*

Preapplications

A brief preapplication should be submitted. The preapplication should identify, on the cover sheet, the institution, Principal Investigator name, address, telephone, fax and e-mail address, title of the project, and the field of scientific research. The preapplication should consist of a two to three page narrative describing the research project objectives and methods of accomplishment. These will be reviewed for responsiveness to the scope and research needs described in this notice. Preapplications are strongly encouraged but not required prior to submission of a full application. Please note that notification of a successful preapplication is not an indication that an award will be made in response to the formal application.

Merit Review

Applications will be subjected to a scientific merit review (peer review) and will be evaluated against the following

evaluation criteria listed in descending order of importance as codified at 10 CFR 605.10(d):

1. Scientific and/or Technical Merit of the Project,
2. Appropriateness of the Proposed Method or Approach,
3. Competency of Applicant's Personnel and Adequacy of Proposed Resources,
4. Reasonableness and Appropriateness of the Proposed Budget.

The evaluation will include program policy factors, such as the relevance of the proposed research to the terms of the announcement and an agency's programmatic needs. Note external peer reviewers are selected with regard to both their scientific expertise and the absence of conflict-of-interest issues. Non-federal reviewers may be used, and submission of an application constitutes agreement that this is acceptable to the investigator(s) and the submitting institution.

Information about development and submission of applications, eligibility, limitations, evaluation, selection process, and other policies and procedures may be found in 10 CFR part 605 and in the Application Guide for the Office of Science Financial Assistance Program. Electronic access to the Guide and required forms is made available via the World Wide Web at: *http://www.sc.doe.gov/production/grants/grants.html.* DOE is under no obligation to pay for any costs associated with the preparation or submission of applications if an award is not made. DOE policy requires that potential applicants adhere to 10 CFR 745 ''Protection of Human Subjects'', or such later revision of those guidelines as may be published in the **Federal Register**.

The Office of Science, as part of its grant regulations, requires at 10 CFR 605.11(b) that a recipient receiving a grant and performing research involving recombinant DNA molecules and/or organisms and viruses containing recombinant DNA molecules shall comply with the National Institutes of Health ''Guidelines for Research Involving Recombinant DNA Molecules,'' which is available via the World Wide Web at: *http://www.niehs.nih.gov/odhsb/biosafe/nih/rdna-apr98.pdf,* (59 FR 34496, July 5, 1994), or such later revision of those guidelines as may be published in the **Federal Register**.

The Catalog of Federal Domestic Assistance number for this program is 81.049, and the solicitation control number is ERFAP 10 CFR part 605.

Issued in Washington DC on October 21, 2002.

John Rodney Clark,

Associate Director of Science for Resource Management.

[FR Doc. 02–27206 Filed 10–24–02; 8:45 am]

BILLING CODE 6450–03–P

DEPARTMENT OF ENERGY

National Energy Technology Laboratory

Notice of Availability of a Financial Assistance Solicitation

AGENCY: National Energy Technology Laboratory (NETL), U.S. Department of Energy (DOE).

ACTION: Notice of availability of a financial assistance solicitation.

SUMMARY: NETL announces that, pursuant to 10 CFR 600.8(a)(2), and in support of advanced coal research to U.S. colleges and universities, it intends to conduct a competitive Program Solicitation No. DE–PS26–03NT41634 and award financial assistance grants to qualified recipients. Applications will be subjected to a merit review by a technical panel of DOE subject-matter experts and external peer reviewers. Awards will be made to a limited number of applicants based on: the scientific merit of the applications, application of relevant program policy factors, and the availability of funds.

Once released, the solicitation will be available for downloading from the ''Industry Interactive Procurement System'' (IIPS) Internet page. At this internet site you will be able to register with IIPS, enabling you to download the solicitation and to submit an application. If you need technical assistance in registering or for any other IIPS function, call the IIPS Help Desk at 800–683–0751 or email the Help Desk personnel at *IIPS_HelpDesk@e-center.doe.gov.* Questions relating to the solicitation content must be submitted electronically through IPPS. All responses to questions will be released on the IIPS home page as will all amendments. The solicitation will only be available in IIPS.

DATES: The solicitation will be available for downloading on the DOE/ NETL's Homepage at *http://www.netl.doe.gov/business* and the IIPS ''Industry Interactive Procurement System'' Internet page located at *http://e-center.doe.gov* on or about October 21, 2002. Applications must be prepared and submitted in accordance with the instructions in the Program Solicitation and must be received at NETL by December 2, 2002. Prior to submitting your application to the solicitation, periodically check the NETL Website for any amendments.

FOR FURTHER INFORMATION CONTACT: Debra A. Duncan, U.S. Department of Energy, National Energy Technology Laboratory, PO Box 10940 (MS 921–107), Pittsburgh, Pennsylvania 15236–0940; Telephone: 412–386–5700; Facsimile: 412–386–6137; e-mail: *duncan@netl.doe.gov.*

SUPPLEMENTARY INFORMATION: Through Program Solicitation DE–PS26–03NT41634, the DOE is interested in applications from U.S. colleges and universities, and university-affiliated research centers submitting applications through their respective universities. Applications will be selected to complement and enhance research being conducted in related Fossil Energy programs. Applications may be submitted individually (*i.e.*, by only one college/university or one college partnering with one other college/university) or jointly (*i.e.*, by Ateams' made up of (1) three or more colleges/universities, or (2) two or more colleges/universities and at least one industrial partner. Collaboration, in the form of joint applications, is *encouraged* but not required.

Eligibility

Applications submitted in response to this solicitation must address coal research in one of the key focus areas of the Core Program or as outlined in the Innovative Concepts (IC) Phase I and Phase II Programs.

Background

The current landscape of the U.S. energy industry, not unlike that in other parts of the world, is undergoing a transformation driven by changes such as deregulation of power generation, more stringent environmental standards and regulations, climate change concerns, and other market forces. With these changes come new players and a refocusing of existing players in providing energy services and products. The traditional settings of how energy (both electricity and fuel) is generated, transported, and utilized are likely to be very different in the coming decades. As market, policy, and regulatory forces evolve and shape the energy industry both domestically and globally, the opportunity exists for universities, government, and industry partnerships to invest in advanced fossil energy technologies that can return public and economic benefits many times over. These benefits are achievable through

the development of advanced coal technologies for the marketplace.

Energy from coal-fired powerplants will continue to play a dominant role as an energy source, and therefore, it is prudent to use this resource wisely and ensure that it remains part of the sustainable energy solution. In that regard, our focus is on a concept we call Vision 21. Vision 21 is a pathway to clean, affordable energy achieved through a combination of technology evolution and innovation aimed at creating the most advanced fleet of flexible, clean and efficient power and energy plants for the 21st century. Clean, efficient, competitively priced coal-derived products, and low-cost environmental compliance and energy systems remain key to our continuing prosperity and our commitment to tackle environmental challenges, including climate change. It is envisioned that these Vision 21 plants can competitively produce low-cost electricity at efficiencies higher than 60% with coal. This class of facilities will involve ''near-zero discharge'' energy plants—virtually no emissions will escape into the environment. Sulfur dioxide and nitrogen oxide pollutants would be removed and converted into environmentally benign substances, perhaps fertilizers or other commercial products. Carbon dioxide could be (1) Concentrated and either recycled or disposed of in a geologically permanent manner, or (2) converted into industrially useful products, or (3) by creating offsetting natural sinks for CO_2.

Clean coal-fired powerplants remain the major source of electricity for the world while distributed generation, including renewables, will assume a growing share of the energy market. Technological advances finding their way into future markets could result in advanced co-production and co-processing facilities around the world, based upon Vision 21 technologies developed through universities, government, and industry partnerships.

This Vision 21 concept, in many ways is the culmination of decades of power and fuels research and development. Within the Vision 21 plants, the full energy potential of fossil fuel feedstocks and ''opportunity'' feedstocks such as biomass, petroleum coke, and other materials that might otherwise be considered as wastes, can be tapped by integrating advanced technology ''modules.'' These technology modules include fuel-flexible coal gasifiers and combustors, gas for fuels and chemical synthesis. Each Vision 21 plant can be built in the configuration best suited for its market application by combining technology modules. Designers of Vision 21 plant would tailor the plant to use the desired feedstocks and produce the desired products by selecting and integrating the appropriate ''technology modules.''

The goal of Vision 21 is to effectively eliminate, at competitive costs, environmental concerns associated with the use of fossil fuel for producing electricity and transportation fuels. Vision 21 is based on three premises: that we will need to rely on fossil fuels for a major share of our electricity and transportation fuel needs well into the 21st century; that it makes sense to rely on a diverse mix of energy resources, including coal, gas, oil, biomass and other renewables, nuclear, and so-called ''opportunity'' resources, rather than on a reduced subset of these resources; and that R&D directed at resolving our energy and environmental issues can find affordable ways to make energy conversion systems meet even stricter environmental standards.

To accomplish the program objective, applications will be accepted in three program areas: (1) The Core Program, (2) the IC Phase I Program, and (3) the IC Phase II Program.

University Coal Research (UCR) Core Program

To develop and sustain a national program of university research in fundamental coal studies, the DOE is interested in innovative and fundamental research pertinent to coal conversion and utilization. The maximum DOE funding and period of performance for each Individual college/university award under the UCR Core Program is:

12 month project period: $ 80,000 (max. DOE funds)
13–24 month project period: $140,000 (max. DOE funds)
25–60 month project period: $200,000 (max. DOE funds)

Cost sharing is not required but is strongly encouraged.

The maximum DOE funding for each Joint university award (three or more universities partnering) under the UCR Core Program is $400,000 requiring a 36-month performance period. Cost sharing is not required but is strongly encouraged.

The maximum DOE funding for each Joint University/Industry award (two or more universities partnering with at least one industrial partner) under the UCR Core Program is $400,000 requiring a 36-month performance period. A minimum of twenty-five percent (25%) cost sharing of the total proposed project cost is required.

The DOE anticipates funding at least one application in each focus area under the UCR Core Program; however, high-quality applications in a higher priority focus area may be given more consideration during the selection process. Research in this area is *limited* to the following six (6) focus areas and is listed numerically in descending order of programmatic priority.

Core Program Focus Areas

Focus Area 1.0: Materials and Components for Vision 21 Systems

The advanced power systems concepts being pursued under Vision 21 are directed toward very high efficiency and low emissions, particularly of carbon dioxide. Many of these systems depend on the ability to separate hydrogen, oxygen, or carbon dioxide from mixtures containing these gases. Because of the very high overall efficiency and cost goals, R&D emphasizing gas separations and high temperature materials that are significant improvements over conventional methods/systems are of interest. Particular areas of interest are:

Focus Area 1.1: Membranes for Hydrogen Separation

Hydrogen separation in gasification-based systems can be a main source of low cost H_2 for use in refineries, as fuel for fuel cells, and for H_2 product gas. Various ceramic membranes, including both high- and low-temperature membranes and novel non-membrane methods are being developed and tested for hydrogen separation. Two types of ceramic membranes are being investigated for the recovery of hydrogen from coal gasification streams: porous membranes and dense membranes. These membrane types differ significantly in their microstructures, and, therefore, gas separation takes place by entirely different hydrogen diffusion mechanisms as described below. Grant applications are sought to further the development of either or both types of these ceramic membranes for commercial hydrogen production. Proposed approaches must demonstrate that the hydrogen can be produced in large quantities and at high purity; therefore, both the permeation properties and the selectivity of the membranes must be well characterized and understood.

Focus Area 1.2: Ultra-High Performance Materials

Intermetallic compounds offer the potential for the use of metallic structures at temperatures well above 1000 °1C, perhaps up to 1500 °1C. Ongoing progress in the development of

these alloy systems suggests that properties can be achieved that will allow them to be used in engineering applications. The temperature range of interest overlaps that in which ceramic materials are thought to be needed, *i.e.*, these alloys are alternatives to ceramics. Examples of such alloys are Laves phase alloys such as Cr_2Ta and boron modified molybdenum silicide based on Mo_5 Si_3. The challenges with these alloys are to modify them to provide acceptable mechanical properties, including ductility and toughness, and corrosion resistance to allow them to be used in structural applications such as gas turbines. Innovative approaches to the processing of these materials are sought which will provide useful product forms while maintaining a structure that has adequate fracture toughness.

Focus Area 1.3: Coatings Development

Component reliability and long-term trouble-free performance of structural materials are essential in power-generating processes that utilize coal as a feedstock. The two major elements of this materials technology category address these concerns through the development of surface protection by coatings, claddings, *etc.,* and examination of the corrosion behavior of the structural components, (both alloys and ceramics) and protective (thermal and environmental) barriers applied to the component surfaces. There is a need to demonstrate/confirm the efficacy of conventional gas turbines in a coal-derived synthesis gas system. Different hot gas environments are obtained and there is a dearth of long-term performance data for these environments. Applications based on selection and verification testing of turbine hot path component materials and protective coatings are invited.

Additionally, hot corrosion and erosion-corrosion models to predict the lives of candidate gas turbine hot gas path materials in realistic environments for a gas turbine operating on coal-derived gases are needed. These models are necessary to assess potential lives of such components, and establish changes to these environments that would significantly extend these lives.

Focus Area 2.0: Sensors and Control

Sensors for high temperature (1000 °C), harsh environment applications represent a significant research and development challenge. New uses of high temperature materials or advancements in materials science are needed to develop the basis for novel in-situ or at line micro-sensing systems to monitor gases commonly present in coal and coal-derived syngas applications. Sensor materials and platforms capable of detecting one or more of the following are of interest: NO_X, SO_x, CO, H_2, O_2, CH_4, NH_3, mercury, and arsenic.

These sensors and detection systems, when placed in protective housings can serve as low cost devices that are critical to operating power systems at peak efficiency and minimal emissions. Subsequently, the sensing materials must be able to function appropriately at temperatures at or near 1000 °C, and the minimum test temperature for the sensors is 500 °C. Micro-sensors designed with or fabricated using high temperature substrates and materials including but not limited to silicon carbide, alumina, or sapphire are of interest. While revolutionary ideas that have the sound scientific basis to support significant advancements in this technology area are sought, extractive systems or incremental improvements over existing technology are discouraged.

In addition to gas sensor development, new approaches to embedded sensor designs or novel non-destructive evaluation (NDE) techniques that facilitate on-line monitoring of critical parts or components (*e.g.*, stress, corrosion, pressure, thermal barrier coating wear, refractory wear, *etc.*) are needed. Sensors need to be able to function in an ultra high temperature harsh environment. ''Smart'' sensing capabilities such as self-diagnostics and wireless data communication are desirable features.

Successful application of these sensors or NDE techniques will improve system control, protect capital equipment investment, and promote safety through prevention of catastrophic equipment failure. Equipment that could potentially benefit from component monitoring includes gasifiers, turbines, engines, pumps, advanced combustors, fuel cells; other equipment commonly employed in energy and power generation systems.

Focus Area 3.0: Advanced Coal Systems By-Product Utilization

Currently more than a million tons of byproducts are generated annually in the U.S. However, utilization rates of the material remain to be only approximately 30 percent. NETL has a goal to see utilization increased to 50% by 2010. Grant applications are needed to identify novel concepts for increased utilization of byproducts to assist in meeting NETL's utilization goal both in the gasification and coal combustion programmatic areas.

Focus Area 3.1: Gasification

The economics of gasification can be improved by fully utilizing all outlet streams of the process. Sale of value-added byproducts from waste streams and minimization of waste disposal can substantially improve the economics of gasification processes. By-products include ash/slag and sulfur. Applications are sought that will expand market options, such as improving the quality of slags and improving the use of sulfur. Applications are encouraged which do one of the following:

a. Seek to find, and provide proof of concept for, a viable commercial market for coal gasification slag in its natural high moisture, high carbon state.

b. Will develop the methods for reducing the carbon content, moisture content and particle size of the ash/slag so that it will be more marketable.

c. Would lead to the development of new markets and ways to utilize sulfur.

Focus Area 3.2: Coal Combustion

In December of 2001, Environmental Protection Agency (EPA) announced its intention to regulate mercury emissions from coal-fired power plants. Although the best mercury control technology has yet to be determined, DOE is funding tests where activated carbon is being used to control mercury emissions. Preliminary research suggests that the addition of activated carbon to the fly ash could make the fly ash unmarketable or increase the cost of disposal.

a. Research is necessary to identify technologies to mitigate the affects of high carbon concentrations on resale of the ash.

b. Novel utilization technologies for this fly ash that contains very high concentrations of either unburned or activated carbon.

Other environmental regulations are leading many utilities to install selective catalytic reduction systems (SCR). It has been estimated that 80–90 new installations of SCR will occur in the next several years. Questions exist as to the effect of SCR on ash samples from coal-fired units. Grant applications are sought to establish a better understanding of the effect of SCR systems on fly ash and consequently evaluating that fly ash for mercury removal potential including the specific characteristics of the fly ash that have higher mercury capture potential (*i.e.*, amount of carbon, form of carbon present, coal origin).

Finally, future regulations for emissions control of $PM_{2.5}$, regional haze or sulfur dioxide will require lower

emissions of sulfur dioxide from power plants. Since many utilities will add flue gas desulfurization systems (FGD) that will generate additional quantities of by-products, grant applications are also sought to identify novel uses of this FGD material.

Focus Area 4.0: Computational Chemistry for Reforming Technology

The use of fuel cells is anticipated to undergo a large expansion in the future. The market for these power sources is expected to expand dramatically in the coming years because they offer high-energy efficiency and low emissions. Many fuel cells rely on high purity hydrogen as the fuel. When used in this way, hydrogen serves as an energy carrier. Hydrogen may be generated from conventional fossil fuels, coal being a foremost candidate. Although hydrogen has highly desirable properties for use in a fuel cell, its distribution from the central point of manufacture to the point of use remains a stubborn problem. At present, the infrastructure for the transport, storage, and dispensing of hydrogen is largely lacking and expensive to install.

Transporting and storing other fuels with higher volumetric energy density than hydrogen would alleviate some of the major roadblocks. Methanol is one potential energy transport molecule. Commercial production of methanol from coal is now well established. Reforming methanol to generate hydrogen at the point of use still needs to be improved. Catalytic reformers that can operate on a small scale intermittently, reliably, and efficiently over a long period of time are design challenges to chemical engineers. Computational chemistry is becoming an ever more powerful tool that speeds the development of improved catalysts. Application of computational chemistry to the development of leading principles for improved methanol reforming catalysts and catalytic systems can be an effective way to speed their entry into the marketplace.

To assist advancement in the field of methanol reforming technology, applications in computational chemistry that address fundamental chemical processes in producing fuel cell grade hydrogen from methanol are requested. Computational chemistry can provide guidance in the search for more effective, durable, and poison resistant catalytic materials. The overall intent is to speed the development of improved catalyst and reactor systems by providing insight on the major issues such as the function and use of promoters, coking resistance, stability during thermal cycling, and tolerance to operation over a range of flow and thermal conditions. The applications must deal with a specific methanol reforming issue in terms of the fundamental chemistry and physics of the molecular processes involved. Applications based on generic catalyst issues such as those called for in previous solicitations will not be considered unless they deal specifically with a methanol reforming.

Focus Area 5.0: Electrical Interconnects for Coal-Based Solid Oxide Fuel Cell Systems

The push toward oxygen-based coal gasification technologies creates an opportunity to supply pure oxygen to solid oxide fuel cell (SOFC) power generators supplied with coal synthesis gas. When operating on pure oxygen vice air, the power density of SOFCs is nearly double. The research challenge is to develop a suitable electrical interconnect that can survive in both the oxidizing environment of pure oxygen and the reducing environment of coal synthesis gas.

Much research has been performed in the past with regard to ceramic oxide interconnect materials, primarily on lanthanum chromate ($LaCrO_3$), for high temperature (>800 °C) operation. Recent developments in SOFC research have advanced the potential for lower temperature operation in the range of 500 to 800 °C.

Cold gas clean-up processes make the application of low temperature SOFCs more attractive by minimizing the energy requirements to heat both the oxidant and the fuel gas up to the SOFC operating temperature. Resolving oxidation problems with metallic interconnects to maintain high electrical conductivity in the relatively low partial pressure of oxygen in air is a major focus of current SOFC research. For coal-based SOFCs supplied with pure oxygen, even advanced metallic interconnects emerging from this research are expected to suffer serve oxidation. Thus a more robust ceramic-oxide interconnect capable of high electrical conductivity at temperatures ranges from 500 to 800 °C is required.

Grant applications are sought to investigate and characterize ceramic-oxide electrical interconnects, other than $LaCrO_3$ for SOFC applications in coal-based power plants. Of specific interest is fundamental research on ceramic interconnect material chemical, electrical conductivity and mechanical properties in oxidizing and reducing environments for coal-based power plants. It is particularly important to investigate the compatibility and adhesion of the interconnect, and the interfacial resistance with other SOFC components to make quality electrical connections with SOFC materials.

Focus Area 6.0: Partitioning and Mechanism Studies for Mercury and Associated Trace Metals Within Coal-Fired Processes

Understanding mercury chemistry and process-related speciation mechanisms and transformations in laboratory experiments provide necessary steps to first understanding partitioning and subsequently developing mercury removal processes for industrial and coal-fired applications for PC-boilers, cyclone boilers, tangentially-fired boilers, fluidized-bed boilers and gasification processes. Past research has shown a reasonable link between mercury speciation and several parameters including the various constituents of fly ash (*i.e.*, unburned carbon/ LOI); fly ash properties (such as fly ash alkalinity); and process specific information (coal rank, boiler type, flue-gas temperature, Cl concentration, NO_X concentration, sulfur compounds, and CO/CO_2 concentrations).

Grant applications are sought to further understand partitioning and chemistry of mercury and other trace metal and organic substances in coal-fired (bituminous, subbituminous, and lignite) systems. Specifically, modeling or experiments using statistical analysis of these identified parameters on chemical intermediaries and mechanisms is sought.

UCR IC Phase I Program

The goal of solicited research under the IC Phase I Program is to develop unique approaches for addressing fossil energy-related issues. These approaches should represent significant departures from existing approaches, not simply incremental improvements. The IC Phase-I Program seeks ''out-of-the-box'' thinking; therefore, well-developed ideas, past the conceptual stage, are not eligible for the Phase I Program. Applications are invited from individual college/university researchers. The maximum DOE funding for each Phase I award under the IC Program is $50,000 and will require a 12-month performance period. Joint applications (as described under the Core Program) will also be accepted, although no additional funds are made available for joint versus individual applications. Unlike the Core Program, student participation in the IC Phase I proposed research is strongly encouraged, however, not required.

In the twenty-first century, the challenges facing coal and the electric utility industry continue to grow.

Environmental issues such as pollutant control, both criteria and trace pollutants, waste minimization, and the co-firing of coal with biomass, waste, or alternative fuels will remain important. The need for increased efficiency, improved reliability, and lower costs will be felt as an aging utility industry faces deregulation. Advanced power systems, such as a Vision 21 plant, and environmental systems will come into play as older plants are retired and utilities explore new ways to meet the growing demand for electricity.

Innovative research in the coal conversion and utilization areas will be required if coal is to continue to play a dominant role in the generation of electric power. IC applications will be accepted in any of the focus areas listed in the Core Program or the following seven (7) IC Phase II focus areas that are shown in random order and not in order of programmatic priority.

IC Phase I Focus Areas

Focus Area 1.0: Smart Sensors

The development of innovative concepts and techniques for smart sensing are needed to foster the development and implementation of advanced power generation technologies using coal or coal derived syngas. Approaches to sensing combustion related parameters at ultra-high temperatures using laser-based techniques and other non-destructive rapid assessment techniques are encouraged.

Many innovative approaches to sensing are being developed using laser-based techniques or micro-sensors fabricated with silicon as the substrate material. While these developments are viewed favorably, the are not applicable to many industrial systems due to the high temperature harsh conditions. This solicitation seeks to overcome the temperature barriers associated with novel sensing techniques.

The ultimate goal is the utilization of sensor networks, which are low cost, reliable, and accurate for the real-time monitoring. Integrating these sensor networks with advanced control algorithms are envisioned for the on-line optimization of complex power and chemical production facilities conceived under the Vision 21 Program.

Focus Area 2.0: N_2/CO_2 Separation

Since the primary source of greenhouse gas emissions, primarily carbon dioxide, is combustion of fossil fuels such as coal or natural gas, options to reduce carbon dioxide emissions are being examined. In particular, inorganic membranes based on metals, ceramics or zeolites are suitable for the separation of such gases because they can sustain severe conditions such as high pressure, chemical corrosion, and high temperature. Approaches are needed whereby the membrane can be tailored to separate carbon dioxide from the nitrogen, the latter being the predominant component in the flue gas of a fossil fuel fired power plant. For example, the separation could be caused by dopants in the inorganic membrane that prefer to bond with carbon dioxide and facilitate its surface diffusion along the pore wall. Applications are invited wherein factors such as concentration of dopant and pore diameter will be investigated, along with molecular simulations, in order to maximize the separation factor.

Focus Area 3.0: Direct Utilization of Carbon in Fuel Cells

High and intermediate temperature fuel cells offer significant advantages in the direct conversion of carbon to electrical power without an intermediate coal gasification process. Both slurry based and solid-state (*e.g.*, consumable electrodes) based fuel cells have the potential to more directly utilize coal than conventional fuel cell technologies that operate on clean coal synthesis gas.

Grant applications are sought for identification and characterization of one or more (considering the time and financial constraints) fuel cell concepts that utilize carbon from coal. The characterization should demonstrate as much as possible both the power density achievable and the degree of power degradation versus operating time. The characterization should include chemical stability between the components and the impact of coal contaminants on fuel cell performance and operating life. Lifetime effects (phase stability, thermal expansion compatibility, conductivity aging, and electrode sintering) should be considered and characterized as much as possible. The characterization of the material set should in general be as complete as possible and not duplicate publicly known information.

Focus Area 4.0: Mercury and Associated Trace Metal Chemistry Studies Within NO_X Control Systems

By the year 2010, it is estimated that over 50% of coal-fired utilities will install either selective catalytic reduction or selective non-catalytic reduction units to meet NO_X emission limits. Understanding mercury chemistry and process-related speciation mechanisms and transformations related to NO_X control systems would provide necessary information to develop more effective, less costly mercury removal processes for industrial and coal-fired boilers. Past research has shown a probable relationship between degree of mercury oxidation and age of NO_X catalyst, coal rank, size (or residence time) of NO_X control vessel, degree of NO_X conversion, amount of SO_2 converted to SO3, and ammonia slip. Grant applications are sought to further understand partitioning and chemistry of mercury and other trace metal and organic substances in coal-fired (bituminous, subbituminous, and lignite) systems utilizing SCR/SNCR or ammonia injection. Specifically, statistical analysis clarifying the importance of each of these identified parameters and/or their interactions on chemical intermediaries and mechanisms is sought.

Focus Area 5.0: Water Impacts From Coal-Burning Power Plants

Producing electric power from coal has impacts to water quality from the beginning of the process, mining the coal, to the disposal of ash remaining after the coal has been combusted. Coal mining has left large amounts of overburden wastes that contain sulfide minerals that weather to form sulfuric acid. Many of these areas are causing problems with water quality and re-vegetation. It is estimated that 10,000 miles of streams in the United States are affected by acid mine drainage. The Environmental Protection Agency (EPA) has initiated a Total Maximum Daily Load (TMDL) program to restore impaired water bodies, some of which are degraded from past mining. Coal washing is used to remove pyritic sulfur and other impurities that could be emitted into the air; however, wastewater from this process may release these substances to water bodies. A large quantity of water is used in power plants to condense the steam leaving the turbine. Once-through cooling systems can damage aquatic life and add heat to streams. The EPA has developed new regulations under the Clean Water Act, section 316(b), to reduce once through cooling usage of water and improve cooling water intake structures. Re-circulating cooling towers require the addition of biocides and corrosion inhibitors, which may be released to water bodies during blowdowns. Wet scrubbing of air pollutants from flue gas generates a large quantity of wastewater. Ash ponds have the potential for creating run-off problems and groundwater infiltration. Research opportunities for improving water quality associated with coal

combustion for power generation include: (1) Novel active and passive treatment technologies to address acid mine drainage; (2) innovative solutions to restoring abandoned mine lands to enhance watersheds; (3) improved intake and outflow structures for cooling water; (4) novel uses for waste heat from power plant cooling; (5) advanced water-related sensors and controls at power plants to minimize adverse impacts to water quality; (6) novel treatment techniques for scrubber wastewater; and (7) novel techniques for reducing coal-washing waste and ash pond runoff.

Focus Area 6.0: Simulation of CO_2–Brine-Mineral Interactions

One strategy under evaluation to mitigate increasing atmospheric concentrations of CO_2 is to inject it into geological formations such as deep saline aquifers. When CO_2 is injected into brine formations it can be trapped by several mechanisms. The CO_2 can react with the host rock and/or brine to form mineral carbonates (mineral trapping) or it can become dissolved in and react with the slow moving basinal brine (hydrodynamic trapping) to form carbonic acid and its dissociation products. Mineral trapping is the preferred storage mechanism. In order the begin to evaluate the feasibility of geological sequestration in deep saline aquifers the thermodynamic and kinetic properties of the H_2O-CO_2–NaCl system must be known in order to simulate chemical reactions in these complex systems. These properties are not only critical for the interpretation of laboratory experiments, but also to field scale tests, and reservoir scale simulation. Most simulations of these systems use an equation of state (EOS) to describe the properties of the H_2O–CO_2–NaCl system. The thermodynamic properties for gas-liquid-salt systems can be described by EOS, which describes the quantitative relationships between intensive parameters of a system (*e.g.*, T, P) and extensive parameters (*e.g.*, volume, mass). Consequently, research directed toward evaluation of the ability of existing EOS to accurately estimate the properties of this system is of interest to the U.S. DOE.

Grant applications directed toward critical evaluation of the ability of existing equations of state (EOS) to predict the properties of the H_2O–CO_2–NaCl system at temperatures up to 200 C and pressures up to 500 atmospheres are sought. A comparison of the ability of existing EOS to describe the properties of the system under these conditions is needed. An estimation of the deviation between properties predicted using various EOS found in the literature with measured values under a wide range of temperature and pressure must be included. Based upon the results of this evaluation of existing EOS, the researchers may decide to develop a new EOS as part of the application.

Focus Area 7.0: CO_2 Separation From Coal Gasification Process

Separation of CO_2 from coal derived synthesis gas for capture and sequestration is a key technology in the reduction of greenhouse gases emissions to the environment. If required today, existing technologies, such as Rectisol and Selexol, can be applied to capture CO_2; however, such applications require expensive solvent and operate at less than 40°C, imparting a severe energy penalty on the system. The following CO_2 separation technologies are being investigated in existing projects: production of carbon dioxide hydrates, dry scrubbing processes with regenerable sorbents, and membrane separation (dense ceramic and polymer). Applications are invited that incorporate ''outside-the-box'' approaches to the separation of CO_2 from the coal gasification process. As this would be the first step toward a completely novel approach, applications comprising literature studies, theoretical approaches and/or modeling analysis, etc. would be expected. The goal of this work would be to find an approach that:

1. Does not require expensive/proprietary solvents or cool temperatures.
2. Is not already being considered by existing projects.
3. Minimizes the cost of CO_2 separation.

Technologies that produce both high-pressure hydrogen and CO_2 (in separate streams) are preferred.

UCR IC Phase II Program

The goal of the Phase II Program, the principal R&D effort of the IC Program, is to solicit research that augments research previously funded through the Phase I Program. Only recipients receiving a Phase I grant awarded in fiscal year 2001 will be eligible to submit an application for continuation of their Phase I projects. The maximum DOE funding for each Phase II award under the IC Program is $200,000 and will require a 36-month performance period. Its anticipated that institutions submitting an application with approaches that appear sufficiently promising from the Phase I efforts could receive a Phase II award in 2003.

Applications will be accepted in the following focus areas:

Focus Area 1.0 Advanced Sensors for Vision 21 Systems

Focus Area 2.0 Carbon Sequestration

Focus Area 3.0 Mercury and Other Emissions in Advanced Power Systems

Focus Area 4.0 Thermodynamics Measurement for Mixture of Asymmetric Hydrocarbons

Issued in Pittsburgh, PA on October 16, 2002.

Dale A. Siciliano,

Acting Director, Acquisition and Assistance Division.

[FR Doc. 02–27208 Filed 10–24–02; 8:45 am]

BILLING CODE 6450–01–P

DEPARTMENT OF ENERGY

Federal Energy Regulatory Commission

[Docket No. RP02–495–001]

Algonquin LNG, Inc.; Notice of Compliance Filing

October 18, 2002.

Take notice that on October 11, 2002, Algonquin LNG, Inc. (ALNG) tendered for filing as part of its FERC Gas Tariff, First Revised Volume No. 1, Sub Seventh Revised Sheet No. 83, to be effective October 1, 2002.

ALNG states that it is making this filing pursuant to a letter order issued by the Commission in the captioned docket on September 26, 2002. The September 26 order conditionally accepted tariff sheets filed with ALNG's initial compliance filing for implementation of Order No. 587-O, subject to ALNG filing certain explanations. This filing includes the requested explanations and a revised tariff sheet that reflects modifications in accordance with the September 26 order.

ALNG states that copies of its filing have been mailed to all affected customers, state commissions and parties on the Commission's official service list in this proceeding.

Any person desiring to protest said filing should file a protest with the Federal Energy Regulatory Commission, 888 First Street, NE., Washington, DC 20426, in accordance with section 385.211 of the Commission's Rules and Regulations. All such protests must be filed in accordance with Section 154.210 of the Commission's Regulations. Protests will be considered by the Commission in determining the appropriate action to be taken, but will

not serve to make protestants parties to the proceedings. This filing is available for review at the Commission in the Public Reference Room or may be viewed on the Commission's Web site at *http://www.ferc.gov* using the ''FERRIS'' link. Enter the docket number excluding the last three digits in the docket number field to access the document. For Assistance, call (202)502–8222 or for TTY, (202) 502–8659. The Commission strongly encourages electronic filings. *See*, 18 CFR 385.2001(a)(1)(iii) and the instructions on the Commission's Web site under the ''e-Filing'' link.

Linwood A. Watson, Jr.,

Deputy Secretary.

[FR Doc. 02–27289 Filed 10–24–02; 8:45 am]

BILLING CODE 6717–01–P

DEPARTMENT OF ENERGY

Federal Energy Regulatory Commission

[Docket No. RP03–24–000]

Algonquin LNG, Inc.; Notice of Proposed Changes in FERC Gas Tariff

October 18, 2002.

Take notice that on October 15, 2002, Algonquin LNG, Inc. (ALNG) tendered for filing as part of its FERC Gas Tariff, First Revised Volume No. 1 and Original Volume No. 2 the following tariff sheets to become effective on October 15, 2002:

First Revised Volume No. 1

Second Revised Sheet No. 1
First Revised Sheet No. 74C
First Revised Sheet No. 75

Original Volume No. 2

First Revised Sheet No. 1

ALNG proposes to cancel its FERC Gas Tariff Original Volume No. 2 in its entirety and to update its FERC Gas Tariff, Volume No. 1 by making minor non-substantive tariff revisions.

ALNG states that copies of this filing were served on all affected customers of Maritimes and interested state commissions.

Any person desiring to be heard or to protest said filing should file a motion to intervene or a protest with the Federal Energy Regulatory Commission, 888 First Street, NE., Washington, DC 20426, in accordance with Sections 385.214 or 385.211 of the Commission's Rules and Regulations. All such motions or protests must be filed in accordance with section 154.210 of the Commission's Regulations. Protests will be considered by the Commission in determining the appropriate action to be taken, but will not serve to make protestants parties to the proceedings. Any person wishing to become a party must file a motion to intervene. This filing is available for review at the Commission in the Public Reference Room or may be viewed on the Commission's Web site at *http://www.ferc.gov* using the ''FERRIS'' link. Enter the docket number excluding the last three digits in the docket number field to access the document. For Assistance, call (202)502–8222 or for TTY, (202) 502–8659. Comments, protests and interventions may be filed electronically via the Internet in lieu of paper. The Commission strongly encourages electronic filings. *See*, 18 CFR 385.2001(a)(1)(iii) and the instructions on the Commission's Web site under the ''e-Filing'' link.

Linwood A. Watson, Jr.,

Deputy Secretary.

[FR Doc. 02–27291 Filed 10–24–02; 8:45 am]

BILLING CODE 6717–01–P

DEPARTMENT OF ENERGY

Federal Energy Regulatory Commission

[Docket No. RP02–430–001]

ANR Pipeline Company; Notice of Compliance Filing

October 17, 2002.

Take notice that on October 11, 2002, ANR Pipeline Company (ANR), tendered for filing as part of its FERC Gas Tariff, Second Revised Volume No. 1, the tariff sheets listed in Appendix A attached to the filing, with an effective date of October 1, 2002.

ANR states that these tariff sheets are being filed in compliance with the Commission's Letter Order dated September 27, 2002.

Any person desiring to protest said filing should file a protest with the Federal Energy Regulatory Commission, 888 First Street, NE., Washington, DC 20426, in accordance with section 385.211 of the Commission's Rules and Regulations. All such protests must be filed in accordance with Section 154.210 of the Commission's Regulations. Protests will be considered by the Commission in determining the appropriate action to be taken, but will not serve to make protestants parties to the proceedings. This filing is available for review at the Commission in the Public Reference Room or may be viewed on the Commission's Web site at *http://www.ferc.gov* using the ''FERRIS'' link. Enter the docket number excluding the last three digits in the docket number field to access the document. For Assistance, call (202) 502–8222 or for TTY, (202) 502–8659. The Commission strongly encourages electronic filings. *See*, 18 CFR 385.2001(a)(1)(iii) and the instructions on the Commission's Web site under the ''e-Filing'' link.

Linwood A. Watson, Jr.,

Deputy Secretary.

[FR Doc. 02–27057 Filed 10–24–02; 8:45 am]

BILLING CODE 6717–01–P

DEPARTMENT OF ENERGY

Federal Energy Regulatory Commission

[Docket No. RP02–424–001]

ANR Storage Company: Notice of Compliance Filing

October 18, 2002.

Take notice that on October 11, 2002, ANR Storage Company (ANR Storage), tendered for filing as part of its FERC Gas Tariff, Original Volume No. 1, the tariff sheets listed in appendix A to the filing, with an effective date of October 1, 2002.

ANR Storage states that these tariff sheets are being filed in compliance with the Commission's Letter Order dated September 27, 2002.

Any person desiring to protest said filing should file a protest with the Federal Energy Regulatory Commission, 888 First Street, NE., Washington, DC 20426, in accordance with section 385.211 of the Commission's Rules and Regulations. All such protests must be filed in accordance with section 154.210 of the Commission's Regulations. Protests will be considered by the Commission in determining the appropriate action to be taken, but will not serve to make protestants parties to the proceedings. This filing is available for review at the Commission in the Public Reference Room or may be viewed on the Commission's Web site at *http://www.ferc.gov* using the ''FERRIS'' link. Enter the docket number excluding the last three digits in the docket number field to access the document. For Assistance, call (202)502–8222 or for TTY, (202) 502–8659. The Commission strongly encourages electronic filings. *See* 18 CFR 385.2001(a)(1)(iii) and the instructions on the Commission's Web site under the ''e-Filing'' link.

Linwood A. Watson, Jr.,

Deputy Secretary.

[FR Doc. 02–27280 Filed 10–24–02; 8:45 am]

BILLING CODE 6717–01–P

DEPARTMENT OF ENERGY

Federal Energy Regulatory Commission

[Docket No. RP02–433–001]

Blue Lake Gas Storage Company; Notice of Compliance Filing

October 17, 2002.

Take notice that on October 11, 2002, Blue Lake Gas Storage Company (Blue Lake), tendered for filing FERC Gas Tariff, First Revised Volume No. 1, the tariff sheets listed in Appendix A to the filing, with an effective date of October 1, 2002.

Blue Lake states that these tariff sheets are being filed in compliance with the Commission's Letter Order dated September 27, 2002.

Any person desiring to protest said filing should file a protest with the Federal Energy Regulatory Commission, 888 First Street, NE., Washington, DC 20426, in accordance with section 385.211 of the Commission's Rules and Regulations. All such protests must be filed in accordance with Section 154.210 of the Commission's Regulations. Protests will be considered by the Commission in determining the appropriate action to be taken, but will not serve to make protestants parties to the proceedings. This filing is available for review at the Commission in the Public Reference Room or may be viewed on the Commission's Web site at *http://www.ferc.gov* using the ''FERRIS'' link. Enter the docket number excluding the last three digits in the docket number field to access the document. For Assistance, call (202) 502–8222 or for TTY, (202) 502–8659. The Commission strongly encourages electronic filings. *See*, 18 CFR 385.2001(a)(1)(iii) and the instructions on the Commission's Web site under the ''e-Filing'' link.

Linwood A. Watson, Jr.,

Deputy Secretary.

[FR Doc. 02–27058 Filed 10–24–02; 8:45 am]

BILLING CODE 6717–01–P

DEPARTMENT OF ENERGY

Federal Energy Regulatory Commission

[Docket No. RP02–418–001]

Canyon Creek Compression Company; Notice of Compliance Filing

October 18, 2002.

Take notice that on October 15, 2002, Canyon Creek Compression Company (Canyon) tendered for filing to become part of its FERC Gas Tariff, Third Revised Volume No. 1, Substitute Second Revised Sheet No. 140A to be effective October 1, 2002.

Canyon states that the purpose of this filing is to comply with the Commission's Letter Order dated September 30, 2002 which conditionally accepted the tariff sheet tendered by Canyon in compliance with Order No. 587–O.

Canyon states that copies of the filing are being mailed to each person designated on the official service list in Docket No. RP02–418–000.

Any person desiring to protest said filing should file a protest with the Federal Energy Regulatory Commission, 888 First Street, NE, Washington, DC 20426, in accordance with section 385.211 of the Commission's Rules and Regulations. All such protests must be filed in accordance with Section 154.210 of the Commission's Regulations. Protests will be considered by the Commission in determining the appropriate action to be taken, but will not serve to make protestants parties to the proceedings. This filing is available for review at the Commission in the Public Reference Room or may be viewed on the Commission's Web site at *http://www.ferc.gov* using the ''FERRIS'' link. Enter the docket number excluding the last three digits in the docket number field to access the document. For Assistance, call (202)502–8222 or for TTY, (202) 502–8659. The Commission strongly encourages electronic filings. *See*, 18 CFR 385.2001(a)(1)(iii) and the instructions on the Commission's Web site under the ''e-Filing'' link.

Linwood A. Watson, Jr.,

Deputy Secretary.

[FR Doc. 02–27277 Filed 10–24–02; 8:45 am]

BILLING CODE 6717–01–P

DEPARTMENT OF ENERGY

Federal Energy Regulatory Commission

[Docket No. RP02–438–002]

CenterPoint Energy-Mississippi River Transmission Corporation; Notice of Compliance Filing

October 18, 2002.

Take notice that on October 11, 2002, CenterPoint Energy-Mississippi River Transmission Corporation (MRT), formerly known as Mississippi River Transmission Corporation, tendered for filing as part of its FERC Gas Tariff, Third Revised Volume No. 1, the following revised tariff sheets to be effective on October 1, 2002:

Substitute Tenth Revised Sheet no. 80,
Substitute First Revised Sheet no. 80A,
Substitute Fourth Revised Sheet no. 119,
Sixth Revised Sheet no. 120.

MRT states that the purpose of this filing is to comply with the Commission's Letter Order regarding MRT's filing to comply with Order no. 587–O.

Any person desiring to protest said filing should file a protest with the Federal Energy Regulatory Commission, 888 First Street, NE., Washington, DC 20426, in accordance with section 385.211 of the Commission's Rules and Regulations. All such protests must be filed in accordance with section 154.210 of the Commission's Regulations. Protests will be considered by the Commission in determining the appropriate action to be taken, but will not serve to make protestants parties to the proceedings. This filing is available for review at the Commission in the Public Reference Room or may be viewed on the Commission's Website at *http://www.ferc.gov* using the ''FERRIS'' link. Enter the docket number excluding the last three digits in the docket number field to access the document. For Assistance, call (202)502–8222 or for TTY, (202) 502–8659. The Commission strongly encourages electronic filings. *See* 18 CFR 385.2001(a)(1)(iii) and the instructions on the Commission's Web site under the ''e-Filing'' link.

Linwood A. Watson, Jr.,

Deputy Secretary.

[FR Doc. 02–27283 Filed 10–24–02; 8:45 am]

BILLING CODE 6717–01–P

DEPARTMENT OF ENERGY

Federal Energy Regulatory Commission

[Docket No. RP02–480–001]

Central New York Oil And Gas Company, LLC; Notice of Compliance Filing

October 17, 2002.

Take notice that on October 11, 2002, Central New York Oil And Gas Company, LLC (CNYOG) tendered for filing as part of its FERC Gas Tariff, Original Volume No. 1, the following revised tariff sheets, to be effective October 1, 2002:

First Revised Sheet No. 81
Second Revised Sheet No. 82
First Revised Sheet No. 83
First Revised Sheet No. 84
Third Revised Sheet No. 103

CNYOG states that the purpose of its filing is to comply with the Commission's September 26, 2002 order in this proceeding which accepted CNYOG's revised tariff sheets as generally complying with Order No. 587–O and directed CNYOG to file revised tariff sheets incorporating verbatim NAESB Revised Standard 1.3.2, as revised by NAESB's November 30, 2001 errata.

CNYOG further states that it has served copies of this filing upon the company's jurisdictional customers and interested state commissions.

Any person desiring to protest said filing should file a protest with the Federal Energy Regulatory Commission, 888 First Street, NE., Washington, DC 20426, in accordance with section 385.211 of the Commission's Rules and Regulations. All such protests must be filed in accordance with Section 154.210 of the Commission's Regulations. Protests will be considered by the Commission in determining the appropriate action to be taken, but will not serve to make protestants parties to the proceedings. This filing is available for review at the Commission in the Public Reference Room or may be viewed on the Commission's Web site at *http://www.ferc.gov* using the ''FERRIS'' link. Enter the docket number excluding the last three digits in the docket number field to access the document. For Assistance, call (202) 502–8222 or for TTY, (202) 502–8659. The Commission strongly encourages electronic filings. *See*, 18 CFR 385.2001(a)(1)(iii) and the instructions on the Commission's Web site under the ''e-Filing'' link.

Linwood A. Watson, Jr.,

Deputy Secretary.

[FR Doc. 02–27059 Filed 10–24–02; 8:45 am]

BILLING CODE 6717–01–P

DEPARTMENT OF ENERGY

Federal Energy Regulatory Commission

[Docket No. RP03–35–000]

Eastern Shore Natural Gas Company; Notice of Tariff Filing

October 18, 2002.

Take notice that on October 16, 2002, Eastern Shore Natural Gas Company (ESNG) tendered for filing as part of its FERC Gas Tariff, Second Revised Volume No. 1, certain revised tariff sheets in the above captioned docket, bear a proposed effective date of November 1, 2002.

ESNG states that the purpose of this instant filing is to track rate changes attributable to a storage service purchased from Columbia Gas Transmission Corporation (Columbia) under its Rate Schedule SST. The costs of the above referenced storage service comprise the rates and charges payable (or a portion thereof) under ESNG's Rate Schedule CFSS. This tracking filing is being made pursuant to Section 3 of ESNG's Rate Schedule CFSS.

ESNG states that copies of the filing have been served upon its jurisdictional customers and interested State Commissions.

Any person desiring to be heard or to protest said filing should file a motion to intervene or a protest with the Federal Energy Regulatory Commission, 888 First Street, NE., Washington, DC 20426, in accordance with Sections 385.214 or 385.211 of the Commission's Rules and Regulations. All such motions or protests must be filed in accordance with Section 154.210 of the Commission's Regulations. Protests will be considered by the Commission in determining the appropriate action to be taken, but will not serve to make protestants parties to the proceedings. Any person wishing to become a party must file a motion to intervene.

This filing is available for review at the Commission in the Public Reference Room or may be viewed on the Commission's Web site at *http://www.ferc.gov* using the ''FERRIS'' link. Enter the docket number excluding the last three digits in the docket number field to access the document. For Assistance, call (202)502–8222 or for TTY, (202) 502–8659. Comments, protests and interventions may be filed electronically via the Internet in lieu of paper. The Commission strongly encourages electronic filings. *See*, 18 CFR 385.2001(a)(1)(iii) and the instructions on the Commission's Web site under the ''e-Filing'' link.

Linwood A. Watson, Jr.,

Deputy Secretary.

[FR Doc. 02–27292 Filed 10–24–02; 8:45 am]

BILLING CODE 6717–01–P

DEPARTMENT OF ENERGY

Federal Energy Regulatory Commission

[Docket No. RP02–468–001]

Garden Banks Gas Pipeline, LLC; Notice of Compliance Filing

October 18, 2002.

Take notice that on October 15, 2002 Garden Banks Gas Pipeline, LLC (Garden Banks) tendered for filing as part of its FERC Gas Tariff—Original Volume No. 1 the following tariff sheets, with a proposed effective date of October 1, 2002:

Substitute Eighth Revised Sheet No. 136
Substitute Second Revised Sheet No. 137

Garden Banks states that the purpose of its filing is to effectuate changes to its tariff to comply with Order No. 587–O, and, a letter order and an errata issued September 26 and October 4, 2002, respectively, in Docket No. RP02–468–000.

Garden Banks states that a copy of this filing has been served upon its customers.

Any person desiring to protest said filing should file a protest with the Federal Energy Regulatory Commission, 888 First Street, NE., Washington, DC 20426, in accordance with section 385.211 of the Commission's Rules and Regulations. All such protests must be filed in accordance with Section 154.210 of the Commission's Regulations. Protests will be considered by the Commission in determining the appropriate action to be taken, but will not serve to make protestants parties to the proceedings. This filing is available for review at the Commission in the Public Reference Room or may be viewed on the Commission's Web site at *http://www.ferc.gov* using the ''FERRIS'' link. Enter the docket number excluding the last three digits in the docket number field to access the document. For Assistance, call (202)502–8222 or for TTY, (202) 502–8659. The Commission strongly encourages electronic filings. *See*, 18 CFR 385.2001(a)(1)(iii) and the instructions on the Commission's Web site under the ''e-Filing'' link.

Linwood A. Watson, Jr.,

Deputy Secretary.

[FR Doc. 02–27284 Filed 10–24–02; 8:45 am]

BILLING CODE 6717–01–P

DEPARTMENT OF ENERGY

Federal Energy Regulatory Commission

[Docket No. RP02–396–001]

Great Lakes Gas Transmission Limited Partnership; Notice of Compliance Filing

October 18, 2002.

Take notice that on October 15, 2002, Great Lakes Gas Transmission Limited Partnership (Great Lakes) tendered for filing as part of its FERC Gas Tariff Second Revised Volume No. 1 the

following tariff sheets, proposed to be effective October 1, 2002:

Second Substitute Seventh Revised Sheet No. 10A
Second Substitute Eighth Revised Sheet No. 41
Substitute Sixth Revised Sheet No. 42
Substitute Eighth Revised Sheet No. 50C

Great Lakes states that these tariff sheets are being filed to comply with the Commission's Letter Order of September 27, 2002 in Docket No. RP02–396, wherein Great Lakes, July 29, 2002 Order No. 587–O compliance filing was conditionally accepted pending filing of certain revised tariff sheets. Order No. 587–O adopted Version 1.5 of the standards promulgated by the Wholesale Gas Quadrant of the North American Energy Standards Board (NAESB).

Any person desiring to protest said filing should file a protest with the Federal Energy Regulatory Commission, 888 First Street, NE., Washington, DC 20426, in accordance with section 385.211 of the Commission's Rules and Regulations. All such protests must be filed in accordance with section 154.210 of the Commission's Regulations. Protests will be considered by the Commission in determining the appropriate action to be taken, but will not serve to make protestants parties to the proceedings. This filing is available for review at the Commission in the Public Reference Room or may be viewed on the Commission's Web site at *http://www.ferc.gov* using the ''FERRIS'' link. Enter the docket number excluding the last three digits in the docket number field to access the document. For Assistance, call (202)502–8222 or for TTY, (202) 502–8659. The Commission strongly encourages electronic filings. *See*, 18 CFR 385.2001(a)(1)(iii) and the instructions on the Commission's Web site under the ''e-Filing'' link.

Linwood A. Watson, Jr.,
Deputy Secretary.
[FR Doc. 02–27274 Filed 10–24–02; 8:45 am]
BILLING CODE 6717–01–P

DEPARTMENT OF ENERGY

Federal Energy Regulatory Commission

[Docket No. RP02–434–001]

High Island Offshore System, L.L.C., Notice of Compliance Filing

October 18, 2002.

Take notice that on October 11, 2002, High Island Offshore System, L.L.C. (HIOS), tendered for filing as part of its FERC Gas Tariff, Third Revised Volume No. 1, the tariff sheets listed in appendix A to the filing, with an effective date of October 1, 2002..

HIOS states that these tariff sheets are being filed in compliance with the Commission's Letter Order dated September 26, 2002.

Any person desiring to protest said filing should file a protest with the Federal Energy Regulatory Commission, 888 First Street, NE., Washington, DC 20426, in accordance with section 385.211 of the Commission's Rules and Regulations. All such protests must be filed in accordance with section 154.210 of the Commission's Regulations. Protests will be considered by the Commission in determining the appropriate action to be taken, but will not serve to make protestants parties to the proceedings. This filing is available for review at the Commission in the Public Reference Room or may be viewed on the Commission's Web site at *http://www.ferc.gov* using the ''FERRIS'' link. Enter the docket number excluding the last three digits in the docket number field to access the document. For Assistance, call (202)502–8222 or for TTY, (202) 502–8659. The Commission strongly encourages electronic filings. *See* 18 CFR 385.2001(a)(1)(iii) and the instructions on the Commission's Web site under the ''e-Filing'' link.

Linwood A. Watson, Jr.,
Deputy Secretary.
[FR Doc. 02–27282 Filed 10–24–02; 8:45 am]
BILLING CODE 6717–01–P

DEPARTMENT OF ENERGY

Federal Energy Regulatory Commission

[Docket No. RP02–415–001]

Horizon Pipeline Company, L.L.C.; Notice of Compliance Filing

October 18, 2002.

Take notice that on October 11, 2002, Horizon Pipeline Company, L.L.C. (Horizon) tendered for filing to become part of its FERC Gas Tariff, Original Volume No. 1, certain tariff sheets to be effective October 1, 2002.

Horizon states that the purpose of this filing is to comply with the Commission's Letter Order dated September 27, 2002 which conditionally accepted the tariff sheets tendered by Horizon in compliance with Order No. 587–O.

Horizon states that copies of the filing are being mailed to all parties set out on the Commission's official service list in Docket No. RP02–415.

Any person desiring to protest said filing should file a protest with the Federal Energy Regulatory Commission, 888 First Street, NE, Washington, DC 20426, in accordance with section 385.211 of the Commission's rules and regulations. All such protests must be filed in accordance with section 154.210 of the Commission's rRegulations. Protests will be considered by the Commission in determining the appropriate action to be taken, but will not serve to make protestants parties to the proceedings. This filing is available for review at the Commission in the Public Reference Room or may be viewed on the Commission's Web site at *http://www.ferc.gov* using the ''FERRIS'' link. Enter the docket number excluding the last three digits in the docket number field to access the document. For Assistance, call (202)502–8222 or for TTY, (202) 502–8659. The Commission strongly encourages electronic filings. *See*, 18 CFR 385.2001(a)(1)(iii) and the instructions on the Commission's Web site under the ''e-Filing'' link.

Linwood A. Watson, Jr.,
Deputy Secretary.
[FR Doc. 02–27275 Filed 10–24–02; 8:45 am]
BILLING CODE 6717–01–P

DEPARTMENT OF ENERGY

[Docket No. RP02–482–001]

Kern River Gas Transmission Company; Notice of Compliance Filing

October 18, 2002.

Take notice that on October 15, 2002, Kern River Gas Transmission Company (Kern River) tendered for filing as part of its FERC Gas Tariff, Second Revised Volume No. 1, First Revised First Revised Sheet No. 154; First Revised First Revised Sheet No. 155; First Revised Sheet No. 155-A; Substitute Second Revised Sheet No. 177; Substitute Original Revised Sheet No. 181-B; First Revised First Revised Sheet No. 832 ; and First Revised First Revised Sheet No. 833, to be effective October 1, 2002.

Kern River states that the purpose of this filing is to submit revised tariff sheets to comply with the Commission's September 30, 2002 ''Order on Compliance Filing'' by incorporating NAESB Standard 5.3.2 in Kern River's tariff; (2) by revising Kern River's proposed title tracking service; and (3) by updating the version number on certain NAESB Standards incorporated by reference on Sheet No. 177.

Kern River states that it has served a copy of this filing upon each person designated on the official service list compiled by the Secretary in this proceeding.

Any person desiring to protest said filing should file a protest with the Federal Energy Regulatory Commission, 888 First Street, NE., Washington, DC 20426, in accordance with section 385.211 of the Commission's Rules and Regulations. All such protests must be filed in accordance with Section 154.210 of the Commission's Regulations. Protests will be considered by the Commission in determining the appropriate action to be taken, but will not serve to make protestants parties to the proceedings. This filing is available for review at the Commission in the Public Reference Room or may be viewed on the Commission's Web site at *http://www.ferc.gov* using the ''FERRIS'' link. Enter the docket number excluding the last three digits in the docket number field to access the document. For Assistance, call (202)502–8222 or for TTY, (202) 502–8659. The Commission strongly encourages electronic filings. *See*, 18 CFR 385.2001(a)(1)(iii) and the instructions on the Commission's Web site under the ''e-Filing'' link.

Linwood A. Watson, Jr.,

Deputy Secretary.

[FR Doc. 02–27286 Filed 10–24–02; 8:45 am]

BILLING CODE 6717–01–P

DEPARTMENT OF ENERGY

Federal Energy Regulatory Commission

[Docket No. RP02–419–001

Kinder Morgan Interstate Gas Transmission LLC; Notice of Compliance Filing

October 18, 2002.

Take notice that on October 11, 2002, Kinder Morgan Interstate Gas Transmission LLC (KMIGT) tendered for filing to become part of its FERC Gas Tariff, Fourth Revised Volume No. 1-A, certain tariff sheets to be effective October 1, 2002.

KMIGT states that the purpose of this filing is to comply with the Commission's Letter Order issued on September 27, 2002, in Docket No. RP02–419–000.

KMIGT states that copies of the filing are being served on all parties set out on the Commission's official service list in Docket No. RP02–419–000.

Any person desiring to protest said filing should file a protest with the Federal Energy Regulatory Commission, 888 First Street, NE, Washington, DC 20426, in accordance with section 385.211 of the Commission's Rules and Regulations. All such protests must be filed in accordance with Section 154.210 of the Commission's Regulations. Protests will be considered by the Commission in determining the appropriate action to be taken, but will not serve to make protestants parties to the proceedings. This filing is available for review at the Commission in the Public Reference Room or may be viewed on the Commission's Web site at *http://www.ferc.gov* using the ''FERRIS'' link. Enter the docket number excluding the last three digits in the docket number field to access the document. For Assistance, call (202)502–8222 or for TTY, (202) 502–8659. The Commission strongly encourages electronic filings. *See*, 18 CFR 385.2001(a)(1)(iii) and the instructions on the Commission's Web site under the ''e-Filing'' link.

Linwood A. Watson, Jr.,

Deputy Secretary.

[FR Doc. 02–27278 Filed 10–24–02; 8:45 am]

BILLING CODE 6717–01–P

DEPARTMENT OF ENERGY

Federal Energy Regulatory Commission

[Docket No. RP02–505–001]

Kinder Morgan Interstate Gas Transmission LLC; Notice of Compliance Filing

October 18, 2002.

Take notice that on October 11, 2002, Kinder Morgan Interstate Gas Transmission LLC (KMIGT) tendered for filing to become part of its FERC Gas Tariff, Fourth Revised Volume No. 1–B, Substitute Second Revised Sheet No. 54A to be effective October 1, 2002.

KMIGT states that the purpose of this filing is to comply with the Commission's ''Order Conditionally Accepting Tariff Sheets'' issued on September 27, 2002, in Docket No. RP02–505–000.

KMIGT states that copies of the filing are being served on all parties set out on the Commission's official service list in Docket No. RP02–505–000.

Any person desiring to protest said filing should file a protest with the Federal Energy Regulatory Commission, 888 First Street, NE., Washington, DC 20426, in accordance with section 385.211 of the Commission's Rules and Regulations. All such protests must be filed in accordance with Section 154.210 of the Commission's Regulations. Protests will be considered by the Commission in determining the appropriate action to be taken, but will not serve to make protestants parties to the proceedings. This filing is available for review at the Commission in the Public Reference Room or may be viewed on the Commission's Website at *http://www.ferc.gov* using the ''FERRIS'' link. Enter the docket number excluding the last three digits in the docket number field to access the document. For Assistance, call (202) 502–8222 or for TTY, (202) 502–8659. The Commission strongly encourages electronic filings. *See*, 18 CFR 385.2001(a)(1)(iii) and the instructions on the Commission's Web site under the ''e-Filing'' link.

Linwood A. Watson, Jr.,

Deputy Secretary.

[FR Doc. 02–27290 Filed 10–24–02; 8:45 am]

BILLING CODE 6717–01–P

DEPARTMENT OF ENERGY

Federal Energy Regulatory Commission

[Docket No. RP02–489–001]

Maritimes & Northeast Pipeline, L.L.C.; Notice of Compliance Filing

October 18, 2002.

Take notice that on October 15, 2002, Maritimes & Northeast Pipeline, L.L.C. (Maritimes) tendered for filing as part of its FERC Gas Tariff, First Revised Volume No. 1, the tariff sheets listed in Appendices A and B of the filing, to be effective October 1, 2002 or November 1, 2002, as specified in the filing.

Maritimes states that it is making this filing pursuant to a letter order issued by the Commission in the captioned docket on September 27, 2002. The September 27 order conditionally accepted certain tariff sheets filed with Maritimes' initial compliance filing for implementation of Order No. 587–O, and required that Maritimes revise or remove other tariff sheets as discussed in the body of the order. The tariff sheets listed in Appendices A and B of Maritimes' filing reflect these modifications.

Maritimes states that copies of its filing have been mailed to all affected customers of Maritimes and interested state commissions, and to all parties on the Commission's official service list in this proceeding.

Any person desiring to protest said filing should file a protest with the Federal Energy Regulatory Commission, 888 First Street, NE., Washington, DC

20426, in accordance with section 385.211 of the Commission's Rules and Regulations. All such protests must be filed in accordance with Section 154.210 of the Commission's Regulations. Protests will be considered by the Commission in determining the appropriate action to be taken, but will not serve to make protestants parties to the proceedings. This filing is available for review at the Commission in the Public Reference Room or may be viewed on the Commission's Web site at *http://www.ferc.gov* using the ''FERRIS'' link. Enter the docket number excluding the last three digits in the docket number field to access the document. For Assistance, call (202)502–8222 or for TTY, (202) 502–8659. The Commission strongly encourages electronic filings. *See*, 18 CFR 385.2001(a)(1)(iii) and the instructions on the Commission's Web site under the ''e-Filing'' link.

Linwood A. Watson, Jr.,

Deputy Secretary.

[FR Doc. 02–27288 Filed 10–24–02; 8:45 am]

BILLING CODE 6717–01–P

DEPARTMENT OF ENERGY

Federal Energy Regulatory Commission

[Docket No. RP02–420–001]

Natural Gas Pipeline Company of America, Notice of Compliance Filing

October 18, 2002.

Take notice that on October 11, 2002, Natural Gas Pipeline Company of America (Natural) tendered for filing to become part of its FERC Gas Tariff, Sixth Revised Volume No. 1, certain tariff sheets to be effective October 1, 2002.

Natural states that the purpose of this filing is to comply with the Commission's Letter Order dated September 27, 2002 which conditionally accepted the tariff sheets tendered by Natural in compliance with Order No. 587–O.

Natural states that copies of the filing are being mailed to all parties set out on the Commission's official service list in Docket No. RP02–420.

Any person desiring to protest said filing should file a protest with the Federal Energy Regulatory Commission, 888 First Street, NE, Washington, DC 20426, in accordance with section 385.211 of the Commission's Rules and Regulations. All such protests must be filed in accordance with Section 154.210 of the Commission's Regulations. Protests will be considered by the Commission in determining the appropriate action to be taken, but will not serve to make protestants parties to the proceedings. This filing is available for review at the Commission in the Public Reference Room or may be viewed on the Commission's Web site at *http://www.ferc.gov* using the ''FERRIS'' link. Enter the docket number excluding the last three digits in the docket number field to access the document. For Assistance, call (202)502–8222 or for TTY, (202) 502–8659. The Commission strongly encourages electronic filings. *See*, 18 CFR 385.2001(a)(1)(iii) and the instructions on the Commission's Web site under the ''e-Filing'' link.

Linwood A. Watson, Jr.,

Deputy Secretary.

[FR Doc. 02–27279 Filed 10–24–02; 8:45 am]

BILLING CODE 6717–01–P

DEPARTMENT OF ENERGY

Federal Energy Regulatory Commission

[Docket No. RP02–429–001]

Steuben Gas Storage Company, Notice of Compliance Filing

October 18, 2002.

Take notice that on October 11, 2002, Steuben Gas Storage Company (Steuben), tendered for filing as part of its FERC Gas Tariff, Original Volume No. 1, the tariff sheets listed in the attached appendix A to the filing, with an effective date of October 1, 2002.

Steuben states that these tariff sheets are being filed in compliance with the Commission's Letter Order dated September 30, 2002.

Any person desiring to protest said filing should file a protest with the Federal Energy Regulatory Commission, 888 First Street, NE., Washington, DC 20426, in accordance with section 385.211 of the Commission's Rules and Regulations. All such protests must be filed in accordance with section 154.210 of the Commission's Regulations. Protests will be considered by the Commission in determining the appropriate action to be taken, but will not serve to make protestants parties to the proceedings. This filing is available for review at the Commission in the Public Reference Room or may be viewed on the Commission's Web site at *http://www.ferc.gov* using the ''FERRIS'' link. Enter the docket number excluding the last three digits in the docket number field to access the document. For Assistance, call (202)502–8222 or for TTY, (202) 502–8659. The Commission strongly encourages electronic filings. *See* 18 CFR 385.2001(a)(1)(iii) and the instructions on the Commission's Web site under the ''e-Filing'' link.

Linwood A. Watson, Jr.,

Deputy Secretary.

[FR Doc. 02–27281 Filed 10–24–02; 8:45 am]

BILLING CODE 6717–01–P

DEPARTMENT OF ENERGY

Federal Energy Regulatory Commission

[Docket No. RP02–425–001]

Texas Gas Transmission Corporation; Notice of Compliance Filing

October 17, 2002.

Take notice that on October 11, 2002, Texas Gas Transmission Corporation (Texas Gas) tendered for filing as part of its FERC Gas Tariff, First Revised Volume No. 1, the following revised tariff sheet to become effective October 1, 2002:

Substitute Fourth Revised Sheet No. 181

Texas Gas states that this filing is in compliance with the Commission Order issued on September 27, 2002 (100 FERC ¶ 61,369), which required revisions to a tariff sheet previously filed on August 1, 2002 to implement the various standards of Version 1.5 of the North American Energy Standards Board as adopted by Commission Order No. 587–O.

Texas Gas states that copies of the revised tariff sheet is being mailed to Texas Gas's jurisdictional customers and interested state commissions, as well as those parties appearing on the official service list in this docket.

Any person desiring to protest said filing should file a protest with the Federal Energy Regulatory Commission, 888 First Street, NE., Washington, DC 20426, in accordance with section 385.211 of the Commission's Rules and Regulations. All such protests must be filed in accordance with Section 154.210 of the Commission's Regulations. Protests will be considered by the Commission in determining the appropriate action to be taken, but will not serve to make protestants parties to the proceedings. This filing is available for review at the Commission in the Public Reference Room or may be viewed on the Commission's Web site at *http://www.ferc.gov* using the ''FERRIS'' link. Enter the docket number excluding the last three digits in the docket number field to access the document. For Assistance, call (202) 502–8222 or

for TTY, (202) 502–8659. The Commission strongly encourages electronic filings. *See*, 18 CFR 385.2001(a)(1)(iii) and the instructions on the Commission's Web site under the ''e-Filing'' link.

Linwood A. Watson, Jr.,

Deputy Secretary.

[FR Doc. 02–27055 Filed 10–24–02; 8:45 am]

BILLING CODE 6717–01–P

DEPARTMENT OF ENERGY

Federal Energy Regulatory Commission

[Docket No. RP02–470–001]

Trailblazer Pipeline Company; Notice of Compliance Filing

October 18, 2002.

Take notice that on October 15, 2002, Trailblazer Pipeline Company (Trailblazer) tendered for filing to become part of its FERC Gas Tariff, Third Revised Volume No. 1, Substitute Second Revised Sheet No. 147A to be effective October 1, 2002.

Trailblazer states that the purpose of this filing is to comply with the Commission's Letter Order dated September 30, 2002 which conditionally accepted the tariff sheet tendered by Trailblazer in compliance with Order No. 587-O.

Trailblazer states that copies of the filing are being mailed to each person designated on the official service list in Docket No. RP02–470–000.

Any person desiring to protest said filing should file a protest with the Federal Energy Regulatory Commission, 888 First Street, NE., Washington, DC 20426, in accordance with section 385.211 of the Commission's Rules and Regulations. All such protests must be filed in accordance with Section 154.210 of the Commission's Regulations. Protests will be considered by the Commission in determining the appropriate action to be taken, but will not serve to make protestants parties to the proceedings. This filing is available for review at the Commission in the Public Reference Room or may be viewed on the Commission's Web site at *http://www.ferc.gov* using the ''FERRIS'' link. Enter the docket number excluding the last three digits in the docket number field to access the document. For Assistance, call (202)502–8222 or for TTY, (202) 502–8659. The Commission strongly encourages electronic filings. *See*, 18 CFR 385.2001(a)(1)(iii) and the instructions on the Commission's Web site under the ''e-Filing'' link.

Linwood A. Watson, Jr.,

Deputy Secretary.

[FR Doc. 02–27285 Filed 10–24–02; 8:45 am]

BILLING CODE 6717–01–P

DEPARTMENT OF ENERGY

Federal Energy Regulatory Commission

[Docket No. RP96–359–009]

Transcontinental Gas Pipe Line Corporation; Notice of Negotiated Rates

October 18, 2002.

Take notice that on October 10, 2002, Transcontinental Gas Pipe Line Corporation (Transco) tendered for filing the executed service agreements and amendments to those agreements that contain a negotiated rate under Rate Schedule FT applicable to the MarketLink Phase II Expansion Project between Transco and various MarketLink Phase II customers.

Transco states that the purpose of the instant filing is to comply with requirements specified in the Commission's Order issued December 13, 2000, ''Order Amending Certificate and Denying Request for Stay,'' which required Transco, among other things, to file, not less than 30 days prior to the commencement of service of the MarketLink Phase II Expansion Project, the negotiated rate agreements or tariff sheets reflecting the essential elements of its negotiated rate agreements. The anticipated effective date of these negotiated rate agreements is November 1, 2002.

Transco states that copies of the filing are being mailed to its affected customers and interested State Commissions.

Any person desiring to be heard or to protest said filing should file a motion to intervene or a protest with the Federal Energy Regulatory Commission, 888 First Street, NE., Washington, DC 20426, in accordance with sections 385.214 or 385.211 of the Commission's Rules and Regulations. All such motions or protests must be filed in accordance with Section 154.210 of the Commission's Regulations. Protests will be considered by the Commission in determining the appropriate action to be taken, but will not serve to make protestants parties to the proceedings. Any person wishing to become a party must file a motion to intervene. This filing is available for review at the Commission in the Public Reference Room or may be viewed on the Commission's Web site at *http://www.ferc.gov* using the ''FERRIS'' link. Enter the docket number excluding the last three digits in the docket number field to access the document. For Assistance, call (202)502–8222 or for TTY, (202) 502–8659. Comments, protests and interventions may be filed electronically via the Internet in lieu of paper. The Commission strongly encourages electronic filings. *See*, 18 CFR 385.2001(a)(1)(iii) and the instructions on the Commission's Web site under the ''e-Filing'' link.

Linwood A. Watson, Jr.,

Deputy Secretary.

[FR Doc. 02–27293 Filed 10–24–02; 8:45 am]

BILLING CODE 6717–01–P

DEPARTMENT OF ENERGY

Federal Energy Regulatory Commission

[Docket No. RP96–359–010]

Transcontinental Gas Pipe Line Corporation; Notice of Negotiated Rates

October 18, 2002.

Take notice that on October 10, 2002, Transcontinental Gas Pipe Line Corporation (Transco) tendered for filing the executed service agreements and amendments to those agreements that contain a negotiated rate under Rate Schedule FT applicable to the Leidy East Expansion Project between Transco and various Leidy East customers.

Transco states that the purpose of the instant filing is to comply with requirements specified in the Commission's Order issued October 25, 2001, ''Order Issuing Certificate,'' which required Transco, among other things, to file, not less than 30 days prior to the commencement of service of the Leidy East Phase 2 Expansion Project, the negotiated rate agreements or tariff sheets reflecting the essential elements of its negotiated rate agreements. The anticipated effective date of these negotiated rate agreements is November 1, 2002.

Transco states that copies of the filing are being mailed to its affected customers and interested State Commissions.

Any person desiring to be heard or to protest said filing should file a motion to intervene or a protest with the Federal Energy Regulatory Commission, 888 First Street, NE., Washington, DC 20426, in accordance with sections 385.214 or 385.211 of the Commission's Rules and Regulations. All such motions

or protests must be filed in accordance with Section 154.210 of the Commission's Regulations. Protests will be considered by the Commission in determining the appropriate action to be taken, but will not serve to make protestants parties to the proceedings. Any person wishing to become a party must file a motion to intervene. This filing is available for review at the Commission in the Public Reference Room or may be viewed on the Commission's Web site at *http://www.ferc.gov* using the ''FERRIS'' link. Enter the docket number excluding the last three digits in the docket number field to access the document. For Assistance, call (202)502–8222 or for TTY, (202) 502–8659. Comments, protests and interventions may be filed electronically via the Internet in lieu of paper. The Commission strongly encourages electronic filings. *See*, 18 CFR 385.2001(a)(1)(iii) and the instructions on the Commission's Web site under the ''e-Filing'' link.

Linwood A. Watson, Jr.,

Deputy Secretary.

[FR Doc. 02–27294 Filed 10–24–02; 8:45 am]

BILLING CODE 6717–01–P

DEPARTMENT OF ENERGY

Federal Energy Regulatory Commission

[Docket No. RP02–417–001]

Venice Gathering System, L.L.C.; Notice of Compliance Filing

October 18, 2002.

Take notice that on October 11, 2002, Venice Gathering System, L.L.C. (Venice) tendered for filing as part of its FERC Gas Tariff, Original Volume No. 1, the following tariff sheets bearing an effective date of October 1, 2002:

Fourth Revised Sheet No. 47
Second Revised Sheet No. 53
Second Revised Sheet No. 57
Original Sheet No. 122A
Fourth Revised Sheet No. 52
Fourth Revised Sheet No. 56
Fourth Revised Sheet No. 78
Original Sheet No. 123A

Venice states that the filing was made in compliance with the Commission's September 26, 2002 order in the captioned proceeding. Venice further states that the revised tariff sheets reflect changes prescribed by Order No. 587–O and, specifically, new North American Energy Standards Board (NAESB) standards governing Title Transfer Tracking Service, definitions, and timelines applicable to non-biddable releases.

Any person desiring to protest said filing should file a protest with the Federal Energy Regulatory Commission, 888 First Street, NE, Washington, DC 20426, in accordance with Section 385.211 of the Commission's Rules and Regulations. All such protests must be filed in accordance with section 154.210 of the Commission's Regulations. Protests will be considered by the Commission in determining the appropriate action to be taken, but will not serve to make protestants parties to the proceedings. This filing is available for review at the Commission in the Public Reference Room or may be viewed on the Commission's Web site at *http://www.ferc.gov* using the ''FERRIS'' link. Enter the docket number excluding the last three digits in the docket number field to access the document. For Assistance, call (202) 502–8222 or for TTY, (202) 502–8659. The Commission strongly encourages electronic filings. *See*, 18 CFR 385.2001(a)(1)(iii) and the instructions on the Commission's Web site under the ''e-Filing'' link.

Linwood A. Watson, Jr.,

Deputy Secretary.

[FR Doc. 02–27276 Filed 10–24–02; 8:45 am]

BILLING CODE 6717–01–P

DEPARTMENT OF ENERGY

Federal Energy Regulatory Commission

[Docket No. RP02–132–003]

Viking Gas Transmission Company; Notice To Place Tariff Sheets Into Effect

October 17, 2002.

Take notice that on October 11, 2002 Viking Gas Transmission Company (Viking) tendered for filing a Motion To Place Settlement Rates into Effect on an Interim Basis Subject To Conditions (Motion) and tendered for filing as part of its FERC Gas Tariff, First Revised Volume No. 1, the tariff sheets listed on Appendix A to the filing to become effective July 1, 2002 subject to the conditions set forth in Viking's Motion.

Viking states that the purpose of this filing is to place the Settlement Rates into effect on an interim basis subject to certain conditions in accordance with the Offer of Settlement filed in this proceeding on September 13, 2002.

Viking states that copies of this filing have been served on all parties designated on the official service list in this proceeding, on all Viking's jurisdictional customers and to affected state regulatory commissions.

Any person desiring to protest said filing should file a protest with the Federal Energy Regulatory Commission, 888 First Street, NE., Washington, DC 20426, in accordance with section 385.211 of the Commission's Rules and Regulations. All such protests must be filed on or before October 24, 2002. Protests will be considered by the Commission in determining the appropriate action to be taken, but will not serve to make protestants parties to the proceedings. This filing is available for review at the Commission in the Public Reference Room or may be viewed on the Commission's Web site at *http://www.ferc.gov* using the ''FERRIS'' link. Enter the docket number excluding the last three digits in the docket number field to access the document. For Assistance, call (202) 502–8222 or for TTY, (202) 502–8659. Comments, protests and interventions may be filed electronically via the Internet in lieu of paper. The Commission strongly encourages electronic filings. *See*, 18 CFR 385.2001(a)(1)(iii) and the instructions on the Commission's Web site under the ''e-Filing'' link.

Linwood A. Watson, Jr.,

Deputy Secretary.

[FR Doc. 02–27054 Filed 10–24–02; 8:45 am]

BILLING CODE 6717–01–P

DEPARTMENT OF ENERGY

Federal Energy Regulatory Commission

[Docket No. RP02–427–002]

Williams Gas Pipelines Central, Inc.; Notice of Compliance Filing

October 17, 2002.

Take notice that on October 11, 2002,Williams Gas Pipelines Central, Inc. (Williams) tendered for filing as part of its FERC Gas Tariff, First Revised Volume No. 1, the following revised tariff sheet to become effective October 1, 2002:

Substitute First Revised Second Revised Sheet No. 240

Williams states that this filing is in compliance with the Commission Order issued on September 27, 2002 (100 FERC ¶ 61,371), which required revisions to a tariff sheet previously filed on August 1, 2002 to implement the various standards of Version 1.5 of the North American Energy Standards Board as adopted by Commission Order No. 587–O.

Williams states that copies of the revised tariff sheet are being mailed to Williams' jurisdictional customers and interested state commissions, as well as

those parties appearing on the official service list in this docket.

Any person desiring to protest said filing should file a protest with the Federal Energy Regulatory Commission, 888 First Street, NE., Washington, DC 20426, in accordance with section 385.211 of the Commission's Rules and Regulations. All such protests must be filed in accordance with Section 154.210 of the Commission's Regulations. Protests will be considered by the Commission in determining the appropriate action to be taken, but will not serve to make protestants parties to the proceedings. This filing is available for review at the Commission in the Public Reference Room or may be viewed on the Commission's Web site at *http://www.ferc.gov* using the ''FERRIS'' link. Enter the docket number excluding the last three digits in the docket number field to access the document. For Assistance, call (202) 502–8222 or for TTY, (202) 502–8659. The Commission strongly encourages electronic filings. *See*, 18 CFR 385.2001(a)(1)(iii) and the instructions on the Commission's Web site under the ''e-Filing'' link.

Linwood A. Watson, Jr.,

Deputy Secretary.

[FR Doc. 02–27056 Filed 10–24–02; 8:45 am]

BILLING CODE 6717–01–P

DEPARTMENT OF ENERGY

Federal Energy Regulatory Commission

[Docket No. RP02–483–001]

Williston Basin Interstate Pipeline Company; Notice of Compliance Filing

October 18, 2002.

Take notice that on October 11, 2002, Williston Basin Interstate Pipeline Company (Williston Basin), tendered for filing as part of its FERC Gas Tariff, Second Revised Volume No. 1, Substitute Eighth Revised Sheet No. 371, with an effective date of October 1, 2002.

Williston Basin states that the filing is being made in compliance with the Commission's Order issued September 27, 2002 in Docket No. RP02–483–000.

Williston Basin states that the instant filing complies with the Commission's Order by removing NAESB Standard 2.3.30 from Subsection 47.2 of its FERC Gas Tariff, Second Revised Volume No. 1 as directed by the Commission.

Any person desiring to protest said filing should file a protest with the Federal Energy Regulatory Commission, 888 First Street, NE., Washington, DC 20426, in accordance with section 385.211 of the Commission's Rules and Regulations. All such protests must be filed in accordance with Section 154.210 of the Commission's Regulations. Protests will be considered by the Commission in determining the appropriate action to be taken, but will not serve to make protestants parties to the proceedings. This filing is available for review at the Commission in the Public Reference Room or may be viewed on the Commission's Webs ite at *http://www.ferc.gov* using the ''FERRIS'' link. Enter the docket number excluding the last three digits in the docket number field to access the document. For Assistance, call (202) 502–8222 or for TTY, (202) 502–8659. The Commission strongly encourages electronic filings. *See*, 18 CFR 385.2001(a)(1)(iii) and the instructions on the Commission's Web site under the ''e-Filing'' link.

Linwood A. Watson, Jr.,

Deputy Secretary.

[FR Doc. 02–27287 Filed 10–24–02; 8:45 am]

BILLING CODE 6717–01–P

DEPARTMENT OF ENERGY

Federal Energy Regulatory Commission

[Docket No. ER03–34–000, et al.]

FPL Energy Hancock County Wind, LLC, et al.; Electric Rate and Corporate Regulation Filings

October 16, 2002.

The following filings have been made with the Commission. The filings are listed in ascending order within each docket classification.

1. FPL Energy Hancock County Wind, LLC

[Docket No. ER03–34–000]

Take notice that on October 11, 2002, FPL Energy Hancock County Wind, LLC tendered for filing an application for authorization to sell energy and capacity at market-based rates pursuant to section 205 of the Federal Power Act.

Comment Date: November 1, 2002.

2. PEC Energy Marketing, Inc.

[Docket No. ER03–35–000]

Take notice that on October 11, 2002, PEC Energy Marketing, Inc. filed a Notice of Cancellation of its Rate Schedule FERC No. 1.

Comment Date: November 1, 2002.

3. Calpine Northbrook Energy Marketing, LLC

[Docket No. ER03–36–000]

Take notice that on October 11, 2002, Calpine Northbrook Energy Marketing, LLC filed a Notice of Succession to reflect that SkyGen Energy Marketing, LLC has changed its name to Calpine Northbrook Energy Marketing, LLC, and an amendment to its rate schedule.

Comment Date: November 1, 2002.

4. Sierra Pacific Power Company and Nevada Power Company

[Docket No. ER03–37–000]

Take notice that on October 11, 2002, Sierra Pacific Power Company (Sierra) and Nevada Power Company (Nevada Power) tendered for filing pursuant to Section 205 of the Federal Power revised Service Schedule Nos. 1–7 to their Open Access Transmission Tariff (OATT). This filing is intended to update the ancillary services rates included in the OATT. Sierra and Nevada Power request that the revised tariff be made effective on January 1, 2003.

Comment Date: November 1. 2002.

5. MidAmerican Energy Company

[Docket No. ES03–4–000]

Take notice that on October 7, 2002, MidAmerican Energy Company (MidAmerican) filed an application under section 204 of the Federal Power Act seeking authorization to issue various forms of long-term debt with a principal amount not to exceed $700 million during a two-year period.

MidAmerican also requests a waiver of the Commission's competitive bidding and negotiated placement requirements at 18 CFR 34.2.

Comment Date: November 6, 2002.

Standard Paragraph

Any person desiring to intervene or to protest this filing should file with the Federal Energy Regulatory Commission, 888 First Street, NE., Washington, DC 20426, in accordance with Rules 211 and 214 of the Commission's Rules of Practice and Procedure (18 CFR 385.211 and 385.214). Protests will be considered by the Commission in determining the appropriate action to be taken, but will not serve to make protestants parties to the proceeding. Any person wishing to become a party must file a motion to intervene. All such motions or protests should be filed on or before the comment date, and, to the extent applicable, must be served on the applicant and on any other person designated on the official service list. This filing is available for review at the Commission or may be viewed on the

Commission's Web site at *http://www.ferc.gov* using the ''RIMS'' link, select ''Docket #'' and follow the instructions (call 202–208–2222 for assistance). Protests and interventions may be filed electronically via the Internet in lieu of paper; *see* 18 CFR 385.2001(a)(1)(iii) and the instructions on the Commission's Web site under the ''e-Filing'' link.

Linwood A. Watson, Jr.,

Deputy Secretary.

[FR Doc. 02–27052 Filed 10–24–02; 8:45 am]

BILLING CODE 6717–01–P

DEPARTMENT OF ENERGY

Federal Energy Regulatory Commission

[Project No. 346–037-Minnesota]

Minnesota Power, Inc. d.b.a. ALLETE, Inc.; Notice of Availability of Environmental Assessment

October 17, 2002.

In accordance with the National Environmental Policy Act of 1969 and the Federal Energy Regulatory Commission's (Commission's) regulations, 18 CFR part 380 (Order No. 486, 52 FR 47897), the Office of Energy Projects has reviewed the application for a new license for the Blanchard Project located on the Mississippi River, in Morrison County, Minnesota, and has prepared an Environmental Assessment (EA) for the project. In the EA, the Commission's staff has analyzed the potential environmental effects of the project and has concluded that approval of the project, with appropriate environmental measures, would not constitute a major Federal action significantly affecting the quality of the human environment.

A copy of the EA is on file with the Commission and is available for public inspection. The EA may also be viewed on the Commission's Web site at *http://www.ferc.gov* using the ''FERRIS'' link. Enter the docket number excluding the last three digits in the docket number field to access the document. For assistance, call toll free 1–866–208–3676.

Any comments should be filed within 30 days from the issuance date of this notice and should be addressed to the Secretary, Federal Energy Regulatory Commission, 888 First Street, NE., Room 1–A, Washington, DC 20426. Please affix ''Blanchard Project No. 346'' to all comments. Comments may be filed electronically via the Internet in lieu of paper. The Commission strongly encourages electronic filings. *See* 18 CFR 385.2001(a)(1)(iii) and the instructions on the Commission's Website under the ''e-Filing'' link. For further information, contact Tom Dean at (202) 502–6041.

Linwood A. Watson, Jr.,

Deputy Secretary.

[FR Doc. 02–27053 Filed 10–24–02; 8:45 am]

BILLING CODE 6717–01–P

DEPARTMENT OF ENERGY

Federal Energy Regulatory Commission

[Docket No. RM02–16–000]

Notice of Public Forum and Agenda

October 21, 2002.

AGENCY: Federal Energy Regulatory Commission.

ACTION: Notice of public forum and agenda.

SUMMARY: The Federal Energy Regulatory Commission will host a public forum to discuss issues and proposals associated with establishing a new licensing process. This one-day forum will be held from 9:00 a.m. until 4:00 p.m. The FERC Commissioners will attend, and representatives from federal and state agencies, tribes, non-governmental organizations, and the industry have been invited to participate. All interested persons are invited to attend.

DATES: November 7, 2002.

ADDRESSES: Federal Energy Regulatory Commission, 888 First Street, NE., Washington, DC 20426/

FOR FURTHER INFORMATION CONTACT: Timothy Welch, 888 First Street, NE., Washington, DC 20426, (202) 502–8760.

Hydroelectric Licensing Regulations Under the Federal Power Act; Notice of Public Forum and Agenda

[Docket No. RM02–16–000]

October 18, 2002.

As announced in the Notice Requesting Comments and Establishing Public Forums and Procedures and Schedule, issued on September 12, 2002, the Federal Energy Regulatory Commission (Commission) will host a public forum on November 7, 2002, to discuss issues and proposals associated with establishing a new licensing process. This one-day forum will be held in the Commission meeting room, 888 First Street, NE, Washington, DC, from 9:00 a.m. to 4:00 p.m.

The FERC Commissioners will attend, and representatives from federal and state agencies, tribes, non-government organizations, and the industry have been invited to participate. All interested persons are invited to attend. The goal is to identify the need for a new licensing process, key issues a new process should address, as well as how a new licensing process can better accommodate all interested parties' needs. Time will be allotted for audience comment and response to the panelists. We look forward to an informative discussion of the issues associated with development of a new licensing process.

The Forum is not intended to address issues pending in individually docketed hydropower cases before the Commission. Therefore, all participants are requested to address the agenda topics and avoid discussing the merits of individual proceedings. The agenda may be viewed on the Commission's Web site: *www.ferc.gov/hydro/docs/hydro*.

Requirements for Paper and Electronic Filings

Comments or other documents related to this forum may be filed in paper format or electronically. Those filing electronically do not need to make a paper filing.

For paper filings, an original and 8 copies of the comments should be filed with the Secretary, Federal Energy Regulatory Commission, 888 First Street, NE, Washington, DC 20426. Paper filings should, at the top of the first page, refer to Docket No. RM02–16–000. The deadline to file comments is December 6, 2002.

Comments may be filed electronically via the Internet in lieu of paper. The Commission strongly encourages electronic filings. Documents filed electronically via the Internet must be prepared in WordPerfect, MS Word, Portable Document Format, or ASCII format. To file the document, access the Commission's Web site at *http://www.ferc.gov*, click on ''e-Filing'' and then follow the instructions on the screen. First-time users will have to establish a user name and password. The Commission will send an automatic acknowledgment to the sender's e-mail address upon receipt of comments. User assistance for electronic filing is available at 202–502–8258 or by e-mail to efiling@ferc.gov. Comments should not be submitted to the E-mail address.

All comments will be placed in the Commission's public files and will be available for inspection in the Commission's Public Reference Room at 888 First Street, NE, Room 2A, Washington, DC 20426, during regular business hours. Additionally, all comments may be viewed on the

Commission's Web site at *http://www.ferc.gov* using the ''FERRIS'' link. For assistance, call 202–502–8371, or toll free 1–866–208–3676, or for TTY 202–502–8659, or by e-mail to FERCONLINESUPPORT@ferc.gov.

Opportunities for Listening and Viewing the Workshop Offsite and for Obtaining a Transcript

The Capitol Connection offers the opportunity for remote listening and viewing of theforum, which is available for a fee, live over the Internet, via C-Band Satellite. Persons interested in receiving the broadcast, or who need information on making arrangements should contact David Reininger or Julia Morelli at the Capitol Connection (703–993–3100) as soon as possible or visit the Capitol Connection Web site at *http://www.capitolconnection.gmu.edu* and click on ''FERC''.

The forumwill be transcribed. Those interested in obtaining a copy of the transcript immediately for a fee should contact Ace-Federal Reporters, Inc. at 202–347–3700, or 1–800–336–6646. Two weeks after the forum, the transcript will be available for free on the Commission's FERRIS system.

Anyone without access to the Commission's Web site or who have questions about the forum should contact Tim Welch at 202–502–8760, or e-mail *timothy.welch@ferc.gov*.

Linwood A. Watson, Jr.,

Deputy Secretary.

[FR Doc. 02–27272 Filed 10–24–02; 8:45 am]

BILLING CODE 6717–01–P

DEPARTMENT OF ENERGY

Federal Energy Regulatory Commission

[Docket No. AD02–22–000]

Notice of Technical Conference and Agenda; Midwest Energy Infrastructure Conference

October 17, 2002.

As announced in the Notice of Conference issued on September 13, 2002, the Federal Energy Regulatory Commission (FERC) will hold a conference on November 13, 2002 to discuss issues regarding energy infrastructure in the midwestern states. These states include Ohio, West Virginia, Michigan, Indiana, Kentucky, Wisconsin, Illinois, Missouri, Minnesota, Iowa, North Dakota, South Dakota, Nebraska, Kansas, and Oklahoma. This half-day conference will begin at 1 p.m. and conclude at approximately 6 p.m., and will be held at the Sheraton Chicago Hotel and Towers, 301 East North Water Street, Chicago, Illinois (1–800–325–3535). All interested persons are invited to attend.

The conference will focus on the adequacy of the electric, gas and other energy infrastructure in the Midwest. The FERC Commissioners will attend, and the Governors and state utility commissioners of the midwestern states have been invited to participate. The goal is to identify the current state of infrastructure in the Midwest, present and future infrastructure needs, and the means for and barriers to fulfilling those needs. We look forward to an informative discussion of the issues to clarify how we can facilitate and enhance a comprehensive, collaborative approach to energy infrastructure development and reliability for the midwestern states. It is becoming increasingly clear that a well-functioning energy infrastructure is necessary to meet America's energy demands and achieve workable, competitive markets.

The conference Agenda is appended to this Notice. As indicated, the purpose of the conference is to discuss regional infrastructure issues among the panelists, and federal and state officials. It is not intended to deal with issues pending in individually docketed cases before the Commission, such as applications involving hydropower, natural gas certificates, or the formation of Regional Transmission Organizations (RTOs). Therefore, all participants are requested to address the agenda topics and avoid discussing the merits of individual proceedings.

Opportunities for Listening to and Obtaining Transcripts of the Conference

The Capital Connection will offer this meeting live via telephone and audio on the internet for a fee. There will not be live video coverage or videotapes of the conference. For more information about Capitol Connection's services, contact David Reininger or Julia Morelli (703–993–3100), or go to *http://www.capitolconnection.org*.

Audio tapes of the meeting will be available from VISCOM (703–715–7999).

Additionally, transcripts of the conference will be immediately available from Ace Reporting Company (202–347–3700 or 1–800–336–6646), for a fee. They will be available for the public on the Commission's FERRIS system two weeks after the conference.

A reminder to please register for the conference online on the Commission Web site at *http://www.ferc.gov/calendar/courses-outreach/coursesoutreach.htm*. Scroll down and click on ''Midwest Energy Infrastructure Conference''. There is no registration fee.

Questions about the conference program should be directed to: Carol Connors, Office of External Affairs, Federal Energy Regulatory Commission, 888 First Street, NE., Washington, DC 20426, *carol.connors@ferc.gov*.

Linwood A. Watson, Jr.,

Deputy Secretary.

Federal Energy Regulatory Commission Midwest Energy Infrastructure Conference

[Docket No. AD02–22–000]

Conference Agenda

Sheraton Chicago Hotel and Towers 301 East North Water Street Chicago, Illinois November 13, 2002

I. Opening Remarks and Introductions—1 p.m. to 1:15 p.m.

Chairman Pat Wood, Commissioner Nora Mead Brownell, Commissioner William Massey and Commissioner Linda Breathitt

II. Overview of Current Energy Infrastructure 1:15 p.m. to 1:30 p.m.

- Jeff Wright, Office of Energy Projects, FERC

III. Forecasts for Future Energy Use and Economic Impacts of Energy—1:30 p.m. to 2 p.m.

- Rick Mattoon, Senior Economist, Federal Reserve Bank of Chicago

IV. Cross Border Issues/Future Energy Relations and Energy Transfer With Canada—2 p.m. to 3 p.m.

Roundtable discussion on infrastructure constraints and improvements needed in energy supply and transmission to and from our neighboring trading partner, Canada.

- Ga,tan Caron, Chief Operating Officer, National Energy Board—Canada
- Kelly Hunter, Market Access Officer, Export Power Marketing Department, Manitoba Hydro
- Dennis Prince, Vice President, Regulatory Strategy, Alliance Pipeline
- [To be announced]

V. Powering New Generation—3 p.m. to 4 p.m.

Roundtable discussion of infrastructure limitations in the Midwest in the delivery and production of natural gas, electricity and renewable energy (*e.g.*, barriers to siting, construction, and investment).

- Jim Cleary, President, ANR Pipeline Company

- Jake Williams, Vice President, Generation Development, Peabody Energy
- Carl Holmes, Kansas State Representative
- Jim Torgerson, President, Midwest Independent System Operator (MISO)

Break—4 p.m. to 4:15 p.m.

VI. New Technology—4:15 p.m. to 5:15 p.m.

Roundtable discussion on promoting new technologies to ensure energy reliability.

- John Howe, Vice President, Electric Industry Affairs, American Superconductor
- Scott Castelaz, Vice President, Marketing and Corporate Development, Encorp
- Robert Schainker, Ph.D., EPRI
- Tracy Anderson, Business Development Manager, 3M

VII. Discussion by State, Federal, and Canadian Officials of Next Steps and Closing Remarks by FERC Commissioners—5:15 p.m. to 6 p.m.

- Susan Wefald, President, North Dakota Public Service Commission
- Ruth Kretschmer, Commissioner, Illinois Commerce Commission
- Diane Munns, Chairman, Iowa Utilities Board
- Jim Burg, Chairman, South Dakota Public Utilities Commission
- David Svanda, Commissioner, Michigan Public Service Commission

[FR Doc. 02–27051 Filed 10–24–02; 8:45 am]

BILLING CODE 6717–01–P

DEPARTMENT OF ENERGY

Federal Energy Regulatory Commission

[Docket No. PL02–9–000]

Notice of Public Conference and Agenda

October 21, 2002.

AGENCY: Federal Energy Regulatory Commission.

ACTION: Notice of public conference and agenda.

SUMMARY: The Federal Energy Regulatory Commission will convene a public conference to engage industry members and the public in a dialogue about policy issues facing the natural gas industry today and the Commission's regulations of the industry for the future. The one-day conference will convene at 9 a.m.

DATES: October 25, 2002.

ADDRESSES: Federal Energy Regulatory Commission, 888 First Street, NE., Washington, DC 20426.

FOR FURTHER INFORMATION CONTACT: Ken Niehaus, 888 First Street, NE., Washington, DC 20426, (202) 502–6398.

Natural Gas Markets Conference

[Docket No. PL02–9–000]

October 18, 2002.

1. As announced in the Notice of Conference issued September 26, 2002, the Federal Energy Regulatory Commission (FERC or Commission) will convene a public conference on October 25, 2002, at 9:00 a.m., in the Commission Meeting Room (2C) to engage industry members and the public in a dialogue about policy issues facing the natural gas industry today and the Commission's regulation of the industry for the future. All interested persons are invited to attend.

Location

2. The conference will be held in the Commission Meeting Room. Observers will be accommodated on a space available basis, but seating will also be available in an overflow room, which will have a broadcast of the discussion. All visitors must check-in at the First Street entrance. All visitors should have picture identification readily available to ensure a quick check-in.

Participation

3. The conference consists of four sessions and an open forum. The first session consists of two panels. Panel A will present opposing views on forecasted supply/demand. Panel B, which is comprised of industry representatives, will respond to the first panel's viewpoints. Panel A participants should file written statements concerning their topics in advance to allow the Panel B participants the opportunity to formulate their responses.

4. The second session will discuss the applicability of the Commission's open season and open access requirements to LNG facilities. Proponents for LNG development will discuss concerns that the Commission's policies may interfere with the ability to capitalize necessary upstream development. The third session will focus on whether the Commission's current policies and definitions of gathering and transmission as they apply to offshore facilities help or hinder the development of offshore supply sources. The fourth session consists of two panels that will address flexibility in pipeline operations. They will discuss customer needs and how they can be met.

5. Following the session presentations, the Commission will provide an open forum to provide an opportunity for market participants and other interested persons to raise issues and make policy recommendations for Commission consideration. All open forum presentations should be limited to five minutes. A sign-up sheet for the open forum will be available the morning of the conference.

Procedures To File Comments

6. Panel participants are encouraged to file written statements concerning their topics prior to October 24, 2002. All other interested persons may file additional comments on the issues discussed at the conference, or other matters relevant to this proceeding, by November 15, 2002. Comments should include a one-page, single spaced, position summary. Comments may be filed in paper format or electronically. Those filing electronically do not need to make a paper filing. For paper filings, the original and 14 copies of such comments should be submitted to the Office of the Secretary, Federal Energy Regulatory Commission, 888 First Street, NE, Washington, DC, 20426, and should refer to Docket No. PL02–9–000.

7. Comments filed via the Internet must be prepared in WordPerfect, MS Word, Portable Document Format, or ASCII format. To file the document, access the Commission's Web site (http://www.ferc.gov) and clock on ''Make an e-filing,'' and then follow the instructions for each screen. First-time users will have to establish a user name and password. The Commission will send an automatic acknowledgment to the sender's e-mail address upon receipt of the comments.

8. User assistance for electronic filing is available at 202–502–8258 or by e-mail to efiling@ferc.gov. Comments should not be submitted to the e-mail address. All comments will be placed in the Commission's public files and will be available for inspection in the Commission's Public Reference Room at 888 First Street, NE, Washington, DC 20426 during regular business hours. Additionally, all written statements and comments may be viewed, printed, or downloaded remotely via Internet through FERC's Homepage using the FERRIS link. User assistance for FERRIS is available at 866–208–3676, or by e-mail at webmaster@ferc.gov.

Off-the-Record Communications

9. The purpose of this conference is to discuss generic issues and not contested cases pending before the Commission. If any comments raise specific issues concerning pending

contested cases, those comments will be subject to the Commission's Off-the-Record Communications rules located in Subpart V of Part 385 of the Commission's regulations, including the public notice requirements and sanctions listed in sections 385.2201(h) and (i).

Transcripts

10. Transcripts of the conference will be available from Ace Reporting Company (202–347–3700) for a fee. The transcript also will be available on the Commission's FERRIS system two weeks after the conference. Additionally, Capitol Connection offers the opportunity for remote listening and viewing of the conference. It is available for a fee, live or over the Internet, via C-Band Satellite. Persons interested in receiving the broadcast, or who need information on making arrangements should contact David Reininger or Julia Morelli at Capitol Connection (703–993–3100) as soon as possible or visit the Capitol Connection Web site at *http://www.capitolconnection.gmu.edu* and click on ''FERC.''

11. For additional information, please contact Ken Niehaus at 202 502–6398 or at *kenneth.niehaus@ferc.gov*.

Linwood A. Watson, Jr.,

Deputy Secretary.

Natural Gas Markets Conference

October 25, 2002.

9:00 AM Opening Remarks

9:10 AM Session I—Supply and Demand—Anticipated long term growth issues.

Moderator—William Hederman, Director—Office of Market Oversight and Investigations

Panel A

Wayne Andrews, Vice President, Equity Research
Raymond James
Vello Kuuskraa, President, Advanced Resources International

Panel B

Craig Chancellor, Calpine Corporation
Mike Warren, Chairman, President & CEO, Energen Corporation
Paul Cicio, Executive Director, Industrial Energy Consumers of America
Fred Fowler, Interstate Natural Gas Association of America
Mike Stice, President, Gas Power, ConocoPhillips
Mark Pinney, Canadian Association of Petroleum Producers
Bruce Schwartz, Director, Corporate & Government Ratings, Standards & Poor

10:15 AM Break

10:30 AM Session II—LNG—Applicability of the Commission open season and open access requirements on LNG import facilities.

Moderator—Ed Murrell, Office of Markets, Tariffs, and Rates

Phil Bainbridge, Vice President, Global LNG, BP Energy Company
Ron P. Billings, Vice President, Global LNG Exxon/Mobile Gas Marketing Company
John Hritcko, Jr., Vice President, Shell NA LNG Inc.
Stephen L. Huntoon, Hackberry LNG Terminal, LLC.
Claude Devillers, Managing Director, Merzbach Group
Richard L Grant, President and CEO, Tractebel LNG, North America

11:30 AM Session III—Offshore Gathering Policy—The Commission's definition of offshore gathering and its impact on the development of offshore facilities.

Moderator—Robert Christin—Office of the General Counsel

Bill Benham, Vice President, Regulatory Affairs BP Energy Company
Joseph W. Kimmel, Vice President, Marketing and Transportation, Shell Offshore Inc.
James Costan, McGuireWoods LLP
David P. Halphen, Shell Gas Transmission
Allen Armstrong, Williams Field Services
W. Jonathan Airey, Independent Petroleum Association of America

12:30 PM Lunch

1:30 PM Session IV—Flexibility in Pipeline Operations—Pipeline infrastructure and its ability to meet the needs of all future customers.

Moderator—Robert Cupina—Office of Energy Projects

Panel A

Tom Skains, President & Chief Operating Officer, Piedmont Natural Gas
Bert Kalish, Vice President, Government Relations, American Public Gas Association
Dena Wiggins, General Counsel, Process Gas Consumers
Craig Chancellor, Calpine Corporation
Harvey Morris, California Public Utility Commission

Panel B

Paul D. Koonce, Senior Vice President, Portfolio Management, Dominion Resources, Inc.
John Hopper, Falcon Storage
Richard Daniel, EnCana Storage
Carl Levander, Vice President, Regulatory & Strategic Initiatives, NiSource Pipeline Group
Frank Ferrazzi, Interstate Natural Gas Association of America

3:00 PM Open Forum

[FR Doc. 02–27271 Filed 10–24–02; 8:45 am]

BILLING CODE 6717–01–P

DEPARTMENT OF ENERGY

Federal Energy Regulatory Commission

[Docket No. RM98–1–000]

Regulations Governing Off-the-Record Communications; Public Notice

October 18, 2002.

This constitutes notice, in accordance with 18 CFR 385.2201(h), of the receipt of exempt and prohibited off-the-record communications.

Order No. 607 (64 FR 51222, September 22, 1999) requires Commission decisional employees, who make or receive an exempt or a prohibited off-the-record communication relevant to the merits of a contested on-the-record proceeding, to deliver a copy of the communication, if written, or a summary of the substance of any oral communication, to the Secretary.

Prohibited communications will be included in a public, non-decisional file associated with, but not part of, the decisional record of the proceeding. Unless the Commission determines that the prohibited communication and any responses thereto should become part of the decisional record, the prohibited off-the-record communication will not be considered by the Commission in reaching its decision. Parties to a proceeding may seek the opportunity to respond to any facts or contentions made in a prohibited off-the-record communication, and may request that the Commission place the prohibited communication and responses thereto in the decisional record. The Commission will grant such requests only when it determines that fairness so requires. Any person identified below as having made a prohibited off-the-record communication should serve the document on all parties listed on the official service list for the applicable proceeding in accordance with Rule 2010, 18 CFR 385.2010.

Exempt off-the-record communications will be included in the decisional record of the proceeding, unless the communication was with a cooperating agency as described by 40 CFR 1501.6, made under 18 CFR 385.2201(e)(1)(v).

The following is a list of exempt and prohibited off-the-record communications recently received in the Office of the Secretary. These filings are available for review at the Commission in the Public Reference Room or may be viewed on the Commission's Web site at *http://www.ferc.gov* using the ''FERRIS'' link. Enter the docket number excluding the last three digits in the docket number field to access the document. For Assistance, call (202)502–8222 or for TTY, (202) 502–8659.

Exempt

Docket Number	Date filed	Presenter or requester
1. Project No. 1354–000	10–04–02	Don Jack.
2. CP02–396–000	10–04–02	Gini R. Cooper.
3. Project No. 2030–036	10–16–02	Julie Keil (Nan Allen).
4. Project No. 2030–036	10–16–02	Nan Allen.

Linwood A. Watson, Jr.,

Deputy Secretary.

[FR Doc. 02–27273 Filed 10–24–02; 8:45 am]

BILLING CODE 6717–01–P

ENVIRONMENTAL PROTECTION AGENCY

[FRL–7399–7]

Agency Information Collection Activities: Proposed Collection; Comment Request; Approval of State Coastal Nonpoint Pollution Control Programs

AGENCY: Environmental Protection Agency (EPA).

ACTION: Notice.

SUMMARY: In compliance with the Paperwork Reduction Act (44 U.S.C. 3501 *et seq.*), this notice announces that EPA is planning to submit the following continuing Information Collection Request (ICR) to the Office of Management and Budget (OMB): Approval of State Coastal Nonpoint Pollution Control Programs, EPA ICR Number 1569.05, OMB Control Number 2040–0153, expiring on April 30, 2003. Before submitting the ICR to OMB for review and approval, EPA is soliciting comments on specific aspects of the proposed information collection as described below.

DATES: Comments must be submitted on or before November 25, 2002.

ADDRESSES: Comments should be sent to, and copies of the ICR may be obtained without charge from, the Nonpoint Source Control Branch, Assessment and Watershed Protection Division (4503–T), U.S. Environmental Protection Agency, 1200 Pennsylvania Avenue, NW., Washington, DC 20460.

FOR FURTHER INFORMATION CONTACT: Stacie Craddock at EPA by phone at (202) 566–1204, by fax at (202) 566–1545, by e-mail at *craddock.stacie@epa.gov,* or download a copy of the ICR off the Internet at *http://www.epa.gov/icr* and refer to EPA ICR No. 1569.05.

SUPPLEMENTARY INFORMATION:

Affected entities: Entities potentially affected by this action are 18 coastal States and 3 Territories with conditionally approved Coastal Nonpoint Pollution Control Programs.

Title: Approval of Coastal Nonpoint Pollution Control Programs, (OMB Control No. 2040–0153; EPA ICR No. 1569.05) expiring April 30, 2003.

Abstract: Under the provisions of national Program Development and Approval Guidance implementing section 6217 of the Coastal Zone Act Reauthorization Amendments of 1990 (CZARA) which was jointly developed and published by EPA and the National Oceanic and Atmospheric Administration (NOAA), 26 coastal States and 5 coastal Territories with Federally approved Coastal Zone Management Programs have developed and submitted to EPA and NOAA Coastal Nonpoint Pollution Programs. EPA and NOAA have approved 8 States and 2 Territories, and conditionally approved 18 States and 3 Territories. The conditional approvals will require States and Territories to submit additional information in order to obtain final program approval. Recent administrative changes mutually agreed to by States, Territories, EPA and NOAA are expected to expedite the final approval process. CZARA section 6217 requires States and Territories to obtain final approval of their Coastal Nonpoint Pollution Programs in order to retain their full share of funding available to them under section 319 of the Clean Water Act and section 306 of the Coastal Zone Management Act. An agency may not conduct or sponsor, and a person is not required to respond to, a collection of information unless it displays a currently valid OMB control number. The OMB control numbers for EPA's regulations are listed in 40 CFR part 9 and 48 CFR chapter 15.

The EPA would like to solicit comments to:

(i) Evaluate whether the proposed collection of information is necessary for the proper performance of the functions of the agency, including whether the information will have practical utility;

(ii) Evaluate the accuracy of the agency's estimate of the burden of the proposed collection of information, including the validity of the methodology and assumptions used;

(iii) Enhance the quality, utility, and clarity of the information to be collected; and

(iv) Minimize the burden of the collection of information on those who are to respond, including through the use of appropriate automated electronic, mechanical, or other technological collection techniques or other forms of information technology, *e.g.*, permitting electronic submission of responses.

Burden Statement: The annual public reporting and recordkeeping burden for this collection of information is estimated to average 125 hours per response. Burden means the total time, effort, or financial resources expended by persons to generate, maintain, retain, or disclose or provide information to or for a Federal agency. This includes the time needed to review instructions, develop, acquire, install, and utilize technology and systems for the purposes of collecting, validating, and verifying information, processing and maintaining information, and disclosing and providing information; adjust the existing ways to comply with any previously applicable instructions and requirements; train personnel to be able to respond to a collection of information; search data sources; complete and review the collection of information; and transmit or otherwise disclose information.

Respondents/Affected Entities: 18 States and 3 Territories.

Estimated Number of Respondents: 21.

Frequency of Response: Once.

Estimated Total Annual Hour Burden: 2,625.

Estimated Total Annualized Cost Burden: $91,875.

Robert H. Wayland III,

Director, Office of Wetlands, Oceans, and Watersheds.

[FR Doc. 02–27236 Filed 10–24–02; 8:45 am]

BILLING CODE 6560–50–P

ENVIRONMENTAL PROTECTION AGENCY

[FRL–7399–8]

Clean Air Act Advisory Committee; Notice of Charter Renewal

AGENCY: Environmental Protection Agency (EPA).

ACTION: Notice of charter renewal.

The charter for the Environmental Protection Agency's Clean Air Act Advisory Committee (CAAAC) will be renewed for an additional two-year period, as a necessary committee which is in the public interest, in accordance with the provisions of the Federal Advisory Committee Act (FACA), 5 U.S.C. App. 2 section 9(c). The purpose of CAAAC is to provide advice and recommendations to the EPA Administrator on issues associated with policy and technical issues associated with implementation of the Clean Air Act.

It is determined that CAAAC is in the public interest in connection with the performance of duties imposed on the Agency by law.

Inquiries may be directed to Paul Rasmussen, CAAAC Designated Federal Officer, U.S. EPA, Ariel Rios Building, 1200 Pennsylvania Ave., NW., Washington, DC 20460 (Mail code 6102A).

Dated: September 6, 2002.

Jeffrey R. Holmstead,

Assistant Administrator for Air and Radiation.

[FR Doc. 02–27235 Filed 10–24–02; 8:45 am]

BILLING CODE 6560–50–M

ENVIRONMENTAL PROTECTION AGENCY

[ER–FRL–6634–3]

Environmental Impact Statements; Notice of Availability

Responsible Agency: Office of Federal Activities, General Information (202) 564–7167 or *http://www.epa.gov/compliance/nepa/*.

Weekly receipt of Environmental Impact Statements filed October 14, 2002 through October 18, 2002 pursuant to 40 CFR 1506.9.

EIS No. 020428, Final EIS, DOE, NV, Geologic Repository for the Disposal of Spent Nuclear Fuel and High-Level Radioactive Waste, Construction, Operation, Monitoring and Eventually Closing a geologic repository at Yucca Mountain, Nye County, NV, *Wait Period Ends:* November 25, 2002, *Contact:* Dr. Jane R. Summerson (800) 947–3477. This document is available on the Internet at: *http://(www.ymp.gov).*

EIS No. 020429, Draft EIS, BLM, OR, Lookout Mountain Forest and Rangeland Health Project, Baker Resource Management Plan (RMP) Amendment, Visual Resource Management (VRM) Implementation, Baker City, Baker County, OR, Comment Period Ends: January 23, 2003, *Contact:* Ted Davis (541) 523–1431. This document is available on the Internet at: *http://www.or.blm.gov/Vale/Planning/Planning-EnvirnAnalyses.htm.*

EIS No. 020430, Draft EIS, FSA, Programmatic EIS-Emergency Conservation Program (ECP), Improvement and Expansion, To Provide Emergency Funding to Farmers and Ranchers, In the Agricultural Lands of the United States, Comment Period End: December 9, 2002, *Contact:* Don Steck (202) 690–0224. This document is available on the Internet at: *http://www.fsa.usda.gov/dafp/cepd/epb/nepa.htm.*

EIS No. 020431, Draft EIS, AFS, UT, Duck Creek-Swains Access (Duck/Swains), Management Project, To Improve Wildlife Habitat, Soil and Watershed Conditions, and Management of Motorized Vehicle Use, Dixie National Forest, Cedar City Ranger District, Iron, Garfield and Kane Counties, UT, *Comment Period Ends:* December 9, 2002, *Contact:* Priscilla Summers (435) 865–3700.

EIS No. 020432, Final EIS, AFS, MT, Moose Post-Fire Project, Proposal to Decrease Potential Mortality from Bark Beetles to Remaining Live Douglas-fir and Spruce Trees, Recover Merchantable Wood Fiber, Reduce Future Fire Risk and Modify Existing Road Access, Glacier View Ranger District, Flathead National Forest, Flathead County, MT, *Wait Period Ends:* November 25, 2002, *Contact:* Michele Draggoo (406) 387–3827.

EIS No. 020433, Draft Supplement, FHW, WA, Elliott Bridge No. 3166 Replacement, Updated and Reevaluated Information, Proposal to Replace the 149th Avenue SE. Crossing the Cedar River, Funding, U.S. CGD Bridge Permit and Section 404 Permit, City of Renton, King County, WA, *Comment Period Ends:* December 16, 2002, *Contact:* James A. Leonard (360) 753–9408.

EIS No. 20434, Draft EIS, JUS, CA, Sacramento County Juvenile Hall Expansion Project, To Accommodate 90 new beds in the Short-Term, and 240 new beds in the Long-Term, Sacramento County, CA, *Comment Period Ends:* December 9, 2002, *Contact:* Philip Merkle (202) 307–3914. This document is available on the Internet at: *http://www.sacpublicworks.net/jjc/hall/index.htm.*

EIS No. 020435, Final EIS, FHW, CO, Colorado Forest Highway 80, Guanella Pass Road (also known as Park County Road 62/Clear Creek County Road 381/Forest Development Road 118) from US 285 in Grant to Georgetown, Improvements, Funding and US Army COE Section 404, NPDES and Special Use Permits Issuance, Park and Clear Creek Counties, CO, *Wait Period Ends:* November 27, 2002, *Contact:* Richard J. Cushing (303) 716–2138. This FEIS was inadvertently omitted from the 9/27/2002 FR. The CEQ Wait Period is Calculated from 9/27/2002. The FHWA requested an additional 30 days be added to the Wait Period which will end on 11/27/2002.

EIS No. 020436, Draft EIS, FHW, NB, US–81 Highway, Yankton Bridge Replacement, Missouri River Crossing between the City of Yankton, Yankton County, South Dakota and Cedar County, Nebraska, Comment Period Ends: December 9, 2002, Contact: Edward Kosola (402) 437–5521.

EIS No. 020437, Draft EIS, NOA, WA, CA, OR, 2003 Pacific Coast Groundfish Fishery, Proposed Groundfish Acceptable Biological Catch and Optimum Yield Specifications and Management Measures, Implementation, WA, OR and CA, *Comment Period Ends:* December 9, 2002, *Contact:* D. Robert Lohn (206) 526–6150.

Amended Notices

EIS No. 020351, Draft EIS, NOA, AK, OR, WA, CA, Programmatic EIS—Pacific Salmon Fisheries Management Plan, Off the Coasts of Southeast Alaska, Washington, Oregon and California, and the Columbia River Basin, Implementation, Magnuson-Stevens Act, AK, WA, OR and CA, *Comment Period Ends:* November 22, 2002, *Contact:* D. Robert Lohn (206) 526–6150. Revision of FR Notice Published on 8/23/2002: CEQ Comment Period Ending 10/22/2002 has been Extended to 11/22/2002.

Dated: October 21, 2002.

Joseph C. Montgomery,

Director, NEPA Compliance Division, Office of Federal Activities.

[FR Doc. 02–27263 Filed 10–24–02; 8:45 am]

BILLING CODE 6560–50–P

ENVIRONMENTAL PROTECTION AGENCY

[ER–FRL–6634–4]

Environmental Impact Statements and Regulations; Availability of EPA Comments

Availability of EPA comments prepared pursuant to the Environmental Review Process (ERP), under Section 309 of the Clean Air Act and Section 102(2)(c) of the National Environmental Policy Act as amended. Requests for copies of EPA comments can be directed to the Office of Federal Activities at (202) 564–7167. An explanation of the ratings assigned to draft environmental impact statements (EISs) was published in FR dated April 12, 2002 (67 FR 17992).

Draft EISs

ERP No. D–COE–H35005–KS Rating EO2, KS–10 Highway (commonly known as South Lawrence Trafficway) Relocation, Issuance or Denial of US Army COE Section 404 Permit Request, Lawrence City, Douglas County, KS.

Summary: EPA expressed environmental objections to the preferred alternative based upon possible impacts to a National Natural landmark (Baker Wetlands), and the absence of a Clean Water Act 404(b)(1) evaluation. EPA recommended further analysis and coordination to discern Environmental Justice impacts and to ensure compliance with Executive Order 13007 (Indian Sacred Sites).

ERP No. D–COE–K39074–CA Rating EC2, Bolinas Lagoon Ecosystem Restoration, Removal of up to 1.5 Million Cubic Yards of Sediment from the bottom of the Lagoon to Allow Restoration of Tidal Movement and Eventual Restoration of Tidal Habitat, Marin County, CA.

Summary: EPA raised environmental concerns due to projected impacts to jurisdictional wetlands associated with the project's implementation, and a lack of analysis regarding efforts to avoid and minimize, as fully as practicable, such impacts. Although the DEIS proposes to dispose approximately 1.5 million cubic yards of dredged material at an EPA-designated ocean dredged material disposal site, the DEIS does not address alternate options to potentially reuse the dredged material or consistency with applicable Federal requirements.

ERP No. D–NRS–H34029–MO Rating LO, Little Otter Creek Watershed Plan, Installation of One Multi-Purpose Reservoir and Development of Basic Facilities for Recreational Use, Implementation, Caldwell County, MO.

Summary: EPA expressed a lack of objections to the proposed project. It was recommended that the FEIS include more information on wetland mitigation, farm acquisitions and available conservation incentive programs.

ERP No. D–SAW–K64021–CA Rating EC2, Natomas Basin Habitat Conservation Plan, Issuance of Incidental Take Permit and the Adoption of an Implementing Agreement or Agreements, Natomas Basin, Sacramento and Sutter Counties, CA.

Summary: EPA expressed environmental concerns regarding the scientific support for the mitigation ratio, the feasibility of implementing the HCP due to the cost and availability of potential reserve lands, the cumulative effects analysis, and the environmental consequences analysis. EPA urged adoption of more frequent HCP review periods or a shorter permit period and greater consideration of measures to avoid or minimize incidental take.

ERP No. D–SAW–K70008–AZ Rating EC2, Roosevelt Habitat Conservation Plan, Issuance of an Incidental Take Permit to Allow Continued Operation of Roosevelt Dam and Lake, Implementation, Gila and Maricopa Counties, AZ.

Summary: EPA expressed environmental concerns regarding the feasibility of acquiring sufficient off-site mitigation habitat, critical water rights to support this habitat, and the evaluation of cumulative impacts. EPA recommended aggressive implementation of water use efficiencies to maximize beneficial use of project water and to continue to pursue other water and power supply options in order to increase the reliability and flexibility of their water and power supply management plans.

ERP No. DA–COE–G39002–00 Rating LO, Red River Chloride Control Project, Authorization to Reduce the Natural Occurring Levels of Chloride in the Wichita River Only Portion, North, Middle and South Forks, Wichita River and Red River, Implementation, Tulsa District, Wichita County, TX.

Summary: EPA had a lack of objections to the proposed project.

ERP No. DS–COE–E30038–FL Rating EC2, Phipps Ocean Park Beach Restoration Project to Provide Shore Protection for the Shoreline surrounding Phipps Ocean Park within the Town of Palm Beach, Regulatory Authorization and U.S. Army COE Section 10 and 404 Permits Issuance, Palm Beach County, FL.

Summary: EPA has environmental concerns regarding the direct and indirect consequences of this proposal which will require additional information to determine if the unavoidable losses will be appropriately mitigated.

Final EISs

ERP No. F–COE–L39058–00, McNary Reservoir and Lower Snake River Reservoirs, Maintenance of the Authorized Navigation Channel and Dredged Material Management Plan (DMMP), Walla Walla District, Lower Snake River and Columbia River, ID and WA.

Summary: EPA continues to have significant environmental objections with the lack of a sediment reduction strategy, the potential effects from the proposed creation of salmonid habitat, the lack of an adequate monitoring plan, and the lack of clarity related to the role of the Local Sediment Management Group.

ERP No. F–FAA–B51017–MA, Logan Airside Improvements Planning Project (EOEA #10458), Construction and Operation of a New Unidirectional Runway 14/32, Centerfield Taxiway and Additional Taxiway Improvements and New Information Providing Clarification of the Delay Problems, Boston International Airport, Funding, Airport Layout Plan Approval and NPDES Permit, Boston, MA.

Summary: EPA expressed environmental concerns about the enforcement/monitoring of the runway 14/32 wind restriction, the establishment of an appropriate wind threshold for the restriction, demand management/peak period pricing, Environmental Justice, baseline and growth projections, and air quality issues.

ERP No. F–FHW–G40166–LA, I–49 Connector, Construction from Evangeline Thruway, US 90 and US 197 in Urbanized Lafayette, Funding, US Army COE Section 10 and 404 Permits Issuance, Parish of Lafayette, LA.

Summary: EPA has no objections to the selection of the preferred alignment and offered no further comments on the Final EIS.

ERP No. F–FRC–B03010–00, Islander East Pipeline Project, Interstate Natural Gas Pipeline Facilities Construction and Operation to provide 285,000 dekatherms per day (Dth/d) of Natural Gas to Energy Markets in Connecticut,

Long Island and New York City, New Haven, CT and Suffolk County, NY.

Summary: EPA expressed environmental concerns that the FEIS lacks information to understand impacts to wetlands and waters of the US; disagreed with the conclusion that project construction and operation will result in limited adverse environmental impacts; expressed concerns about marine impacts and encouraged close coordination between FERC and the applicant with land trust/conservation organizations along the proposed pipeline route.

ERP No. F–FRC–B05192–ME, Presumpscot River Projects, Relicensing of Five Hydroelectric Projects for Construction and Operation, Dundee Project (FERC No. 2942); Gambo Project (FERC No. 2931); Little Falls Project (FERC No. 2932); Mallison Falls Project (FERC No. 2941) and Saccarappa Project (FERC No. 2897), Cumberland County, ME.

Summary: EPA expressed outstanding environmental concerns about dam removal effects on water quality and recommended that higher flows be considered at the Dundee and Mallison Falls dams. EPA also continued to urge consistency with the Casco Bay Estuary Project.

ERP No. F–FRC–L03011–WA, Georgia Strait Crossing Pipeline (LP) Project, Construction and Operation to Transport Natural Gas from the Canadian Border near Sumas, WA to US/Canada Border at Boundary Pass in the Strait of Georgia, Docket Nos. CP01–176–000 and CP01–179–000, Whatcom and San Juan Counties, WA.

Summary: EPA continues to have significant environmental objections with the proposal given the lack of evaluation of reasonable alternatives, the lack of integration with the evaluation and decision making processes being conducted in Canada for the Canadian portion of the project, and the high risks associated with seismic hazards.

ERP No. F–FRC–L05220–WA, Warm Creek (No. 10865) and Clearwater Creek (No. 11485) Hydroelectric Project, Issuance of License for the Construction and Operation located in the Middle Fork Nooksack River (MFNR) Basin, WA.

Summary: EPA raised environmental objections regarding the proposed projects, including the potential negative impacts to aquatic and terrestrial endangered species, and adverse effects to old growth forest, water quality and cultural and spiritual resources of affected Tribes. EPA recommended that the FERC select the No Action alternative.

ERP No. F–FRC–L05222–ID, Four Mid-Snake River Hydroelectric Projects, Applications for New License for the Existing Projects: Shoshone Falls-FERC No. 2778, Upper Salmon Falls-FERC No. 2777, Lower Salmon Falls-FERC No. 2061 and Bliss-FERC No. 1975, Snake River, ID.

Summary: EPA expressed environmental objections that the final EIS did not identify a preferred alternative. EPA continues to have objections to the No Action alternative, the Applicant Proposed Project, and the Seasonal Run-of-River alternative as they would result in continued negative effects to native fish, aquatic invertebrates, and riparian and wetland habitats. EPA recommended licensing and implementing the Year-Round Run-of-River alternative.

ERP No. F–IBR–J39029–SD, Angostura Unit—(Dam, Reservoir and Irrigation Facilities) Renewal of a Long-Term Water Service Contract, Cheyenne River Basin, Pine Ridge Reservation, Bismarck County, SD.

Summary: No formal comment letter was sent to the preparing agency.

ERP No. F–NRS–G36154–OK, Rehabilitation of Aging Flood Control Dams in Oklahoma, Authorization and Funding, OK.

Summary: EPA has no objection to the proposed action since the document adequately responded to comments offered on the Draft EIS.

ERP No. FA–COE–H36012–MO, St. Johns Bayou and New Madrid Floodway Project, Channel Enlargement and Improvement, Flood Control and National Economic Development (NED), New Madrid, Mississippi and Scott Counties, MO.

Summary: EPA continues to have environmental objections to the project and believes that the recommended plan (alternative 3–1.B) raises substantive environmental issues.

ERP No. FS–COE–F36163–00, Upper Des Plaines River, Flood Damage Reduction at Site 37, Construction of a Concrete Floodwall along Des Plaines River, Milwaukee Avenue, Willow Road and Palatine Road in Mt. Prospect, Cook County, IL.

Summary: EPA had no objections to the proposed project and commended the Corps on their wetland mitigation proposal.

Dated: October 22, 2002.

Joseph C. Montgomery,

Director, NEPA Compliance Division, Office of Federal Activities.

[FR Doc. 02–27264 Filed 10–24–02; 8:45 am]

BILLING CODE 6560–50–P

ENVIRONMENTAL PROTECTION AGENCY

[OEI–2002–0010; FRL 6724–7]

Toxic Chemical Release Reporting; Community Right-to-Know; Request for Comment on Change of Contractor Handling Trade Secret Claims

AGENCY: Environmental Protection Agency (EPA).

ACTION: Notice.

SUMMARY: This notice announces an upcoming change in location and contractor designated to manage the Toxics Release Inventory (TRI) data processing for all TRI submissions including TRI Trade Secret and confidential information submitted pursuant to 40 CFR part 350. In compliance with 40 CFR part 350 (''Trade Secrecy Claims for Emergency Planning and Community Right-to-Know Information'') facilities submitting TRI reports may be eligible to claim Trade Secret for the specific chemical identity of a toxic chemical being reported. Pursuant to 40 CFR 350.23 (''Disclosure to authorized representatives''), information entitled to trade secret or confidential treatment may not be disclosed by the Agency to the Agency's authorized representative until each affected submitter has been furnished notice of the contemplated disclosure by the EPA program office and has been afforded a period found reasonable by that office (not less than five working days) to submit its comments. Pursuant to this **Federal Register** notice, comments are limited to the change of contractor handling trade secret and confidential information submitted under 40 CFR part 350. Once the transition to the new location has been completed, information regarding the new mailing address will be posted on the TRI Web site (*http://www.epa.gov/tri*) and will be included in the *2002 Toxic Chemical Release Inventory Reporting Forms and Instructions.*

DATES: Comments, identified by the docket control number OEI–2002–0010, must be submitted on or before 5 working days after publication in the **Federal Register**.

ADDRESSES: Comments may be submitted by mail, electronically, or in person. Please follow the detailed instructions for each method as provided in Unit III. of the **SUPPLEMENTARY INFORMATION** section of this notice.

FOR FURTHER INFORMATION CONTACT: For general information, contact The Emergency Planning and Community

Right-to-Know Hotline at (800) 424–9346 or (703) 412–9810, TDD (800) 553–7672, *http://www.epa.gov/epaoswer/hotline/*. For technical information about this change in contractor and location for TRI data processing, contact: Wendy Timm, Toxics Release Inventory Program Division, OEI (2844T), Environmental Protection Agency, 1200 Pennsylvania Ave. NW, Washington, DC 20460, Telephone: 202–566–0725; Fax: 202–566–0727; email: *timm.wendy@epa.gov.* Once the transition to the new location has been completed, information regarding the new mailing address will be posted on the TRI Web site (*http://www.epa.gov/tri*) and will be included in the *2002 Toxic Chemical Release Inventory Reporting Forms and Instructions.*

SUPPLEMENTARY INFORMATION:

I. Does This Notice Apply to Me?

A. *Affected Entities:* Entities that will be affected by this action are those facilities that manufacture, process, or otherwise use certain toxic chemicals listed on the Toxics Release Inventory (TRI) and which are required under section 313 of the Emergency Planning and Community Right-to-Know Act (EPCRA) of 1986, to report annually to EPA their environmental releases of such chemicals.

Currently, those industries with the following SIC code designations (that meet all other threshold criteria for TRI reporting) must report toxic chemical releases and other waste management activities:

- 20–39, manufacturing sector
- 10, metal mining (except for SIC codes 1011, 1081, and 1094)
- 12, coal mining (except for SIC code 1241 and extraction activities)
- 4911, 4931 and 4939, electrical utilities that combust coal and/or oil for the purpose of generating power for distribution in commerce.
- 4953, RCRA Subtitle C hazardous waste treatment and disposal facilities
- 5169, chemicals and allied products wholesale distributors
- 5171, petroleum bulk plants and terminals
- 7389, solvent recovery services, and
- Federal facilities in any SIC code

To determine whether you or your business is affected by this action, you should carefully examine the applicability provisions at 40 CFR part 350 and 40 CFR part 372. If you have any questions regarding the applicability of this action to a particular entity, consult the person(s) listed in the **FOR FURTHER INFORMATION CONTACT** section.

II. How Can I Get Copies of This Document and Other Related Information?

A. Docket. EPA has established an official public docket for this action under Docket ID No. OEI–2002–0010.

The public docket includes information considered by EPA in developing this action, including the documents listed below, which are physically located in the docket. In addition, interested parties should consult documents that are referenced in the documents that EPA has placed in the docket, regardless of whether these referenced documents are physically located in the docket. For assistance in locating documents that are referenced in documents that EPA has placed in the docket, but that are not physically located in the docket, please consult the person listed in the preceding **FOR FURTHER INFORMATION CONTACT** section. Although a part of the official docket, the public docket does not include Confidential Business Information (CBI) or other information whose disclosure is restricted by statute. The official public docket is the collection of materials that is available for public viewing at the EPA Docket Center, (EPA/DC) EPA West, Room B102, 1301 Constitution Ave., NW, Washington, DC. The EPA Docket Center Public Reading Room is open from 8:30 a.m. to 4:30 p.m., Monday through Friday, excluding legal holidays. The telephone number for the Reading Room is (202) 566–1742, and the telephone number for the Notice of Change of Contractor Handling TRI Submissions including TRI Trade Secret Claims Docket is (202) 566–1752.

B. Electronic Access. You may access this **Federal Register** document electronically through the EPA Internet under the ''**Federal Register**'' listings at *http://www.epa.gov/fedrgstr/*.

An electronic version of the public docket is available through EPA's electronic public docket and comment system, EPA Dockets. You may use EPA Dockets at *http://www.epa.gov/edocket/* to view public comments, access the index listing of the contents of the official public docket, and to access those documents in the public docket that are available electronically. Although not all docket materials may be available electronically, you may still access any of the publicly available docket materials through the docket facility identified in Unit II.A. Once in the system, select ''search,'' then key in the appropriate docket identification number.

III. How Can I Respond to This Notice?

A. How and To Whom Do I Submit Comments?

You may submit comments through the mail, in person, or electronically. Be sure to identify the appropriate docket control number (*i.e.,* OEI–2002–0010) in your correspondence.

1. By mail. All comments should be sent in triplicate to: Office of Environmental Information (OEI/TRI), Environmental Protection Agency, Mailcode: 2822T, 1200 Pennsylvania Ave., NW., Ariel Rios Building, Washington, DC 20460.

2. In person or by courier. Comments may be delivered in person or by courier to: EPA Docket Center, (EPA/DC) EPA West, Room B102, 1301 Constitution Ave., NW., Washington, DC. The DCO is open from 8 a.m. to 4 p.m., Monday through Friday, excluding legal holidays. The telephone number for the DCO is (202) 260–7093.

3. Electronically. Submit your comments electronically by e-mail to: ''*oei.docket@epa.gov*''. Please note that you should not submit any information electronically that you consider to be CBI. Electronic comments must be submitted as an ASCII file avoiding the use of special characters and any form of encryption. Comments and data will also be accepted on standard computer disks in WordPerfect 6.1/8.0 or ASCII file format. All comments and data in electronic form must be identified by the docket control number OEI–2002–0010. Electronic comments on this document may also be filed online at many Federal Depository Libraries.

B. How Should I Handle CBI Information That I Want To Submit to the Agency?

All comments which contain information claimed as CBI must be clearly marked as such. Three sanitized copies of any comments containing information claimed as CBI must also be submitted and will be placed in the public record for this document. Persons submitting information on any portion of which they believe is entitled to treatment as CBI by EPA must assert a business confidentiality claim in accordance with 40 CFR part 2.203(b) for each such portion. This claim must be made at the time that the information is submitted to EPA. If a submitter does not assert a confidentiality claim at the time of submission, EPA will consider this as a waiver of any confidentiality claim and the information may be made available to the public by EPA without further notice to the submitter.

IV. What Is the General Background for This Action?

The Toxics Release Inventory (TRI) is mandated by the Emergency Planning and Community Right-to-Know Act of 1986 (EPCRA) and the Pollution Prevention Act (PPA) of 1990. EPCRA Section 313 and PPA Section 6607 establishes requirements for Federal, State, and local governments and industry regarding reporting of toxic chemical releases and other waste management quantities.

Under Section 322 of EPCRA and 40 CFR part 350, facilities submitting TRI reports may be eligible to claim Trade Secret for the specific chemical identity of the toxic chemical being reported. Pursuant to 40 CFR 350.23 (''Disclosure to authorized representatives''), information entitled to trade secret or confidential treatment may not be disclosed by the Agency to the Agency's authorized representative until each affected submitter has been furnished notice of the contemplated disclosure by the EPA program office and has been afforded a period found reasonable by that office (not less than five working days) to submit its comments. Such notice shall include a description of the information to be disclosed, the identity of the contractor, subcontractor, or grantee, the contract, subcontract, or grant number, if any, and the purposes to be served by the disclosure. This notice may be published in the **Federal Register** or may be sent to individual submitters.

The Contract to manage the TRI data submissions was recompeted in 1998 and was awarded to the Computer Based Systems Incorporated, now known as Titan Systems, Inc. This contract will end January 31, 2003. The new contract will transition to Computer Sciences Corporation (CSC) (GSA Contract GSOOT99ALD0203) by the end of December 2002. This new facility will be located in New Carrollton, MD. All TRI submissions including trade secret and confidential information submitted pursuant to 40 CFR part 350 will be managed by CSC.

In accordance with 40 CFR 350.23, EPA has determined that CSC and their subcontractors require access to trade secret and confidential information submitted under 40 CFR part 350 in order to receive, manage, process, and safely store such information. The contractor's and subcontractor's personnel will be required to sign a ''Confidentiality Agreement'' prior to being permitted access to trade secret and confidential information submitted under 40 CFR part 350. All contractor and subcontractor access to TRI trade secret and confidential information will take place at the contractor's facility in New Carrollton, MD. The contractor will have appropriate procedures and facilities in place to safeguard the TRI trade secret and confidential information to which the contractor and subcontractors have access during the term of this contract.

List of Subjects

Environmental protection, Trade Secret and Confidential Information, TRI Data Processing.

Dated: October 21, 2002.

Elaine G. Stanley,

Director, Office of Information Analysis and Access.

[FR Doc. 02–27234 Filed 10–24–02; 8:45 am]

BILLING CODE 6560–50–P

FEDERAL DEPOSIT INSURANCE CORPORATION

Sunshine Act Meeting

Pursuant to the provisions of the ''Government in the Sunshine Act'' (5 U.S.C. 552b), notice is hereby given that at 10:03 a.m. on Tuesday, October 22, 2002, the Board of Directors of the Federal Deposit Insurance Corporation met in closed session to consider matters relating to the Corporation's corporate and resolution activities.

In calling the meeting, the Board determined, on motion of Director James E. Gilleran (Director, Office of Thrift Supervision), seconded by Mr. E. Wayne Rushton, acting in the place and stead of Director John D. Hawke, Jr. (Comptroller of the Currency), concurred in by Director John M. Reich (Appointive), that Corporation business required its consideration of the matters on less than seven days' notice to the public; that no earlier notice of the meeting was practicable; that the public interest did not require consideration of the matters in a meeting open to public observation; and that the matters could be considered in a closed meeting by authority of subsections (c)(2), (c)(4), (c)(6), (c)(8), (c)(9)(A)(ii), (c)(9)(B), and (c)(10) of the ''Government in the Sunshine Act'' (5 U.S.C. 552b(c)(2), (c)(4), (c)(6), (c)(8), (c)(9)(A)(ii), (c)(9)(B), and (c)(10)).

The meeting was held in the Board Room of the FDIC Building located at 550 17th Street, NW., Washington, DC.

Dated: October 22, 2002.

Federal Deposit Insurance Corporation.

Valerie J. Best,

Assistant Executive Secretary.

[FR Doc. 02–27325 Filed 10–23–02; 10:30 am]

BILLING CODE 6714–01–M

FEDERAL HOUSING FINANCE BOARD

[No. 2002–N–12]

Federal Home Loan Bank Members Selected for Community Support Review

AGENCY: Federal Housing Finance Board.

ACTION: Notice.

SUMMARY: The Federal Housing Finance Board (Finance Board) is announcing the Federal Home Loan Bank (Bank) members it has selected for the 2002–03 third quarter review cycle under the Finance Board's community support requirement regulation. This notice also prescribes the deadline by which Bank members selected for review must submit Community Support Statements to the Finance Board.

DATES: Bank members selected for the 2002–03 third quarter review cycle under the Finance Board's community support requirement regulation must submit completed Community Support Statements to the Finance Board on or before December 13, 2002.

ADDRESSES: Bank members selected for the 2002–03 third quarter review cycle under the Finance Board's community support requirement regulation must submit completed Community Support Statements to the Finance Board either by regular mail at the Office of Supervision, Community Investment & Affordable Housing, Federal Housing Finance Board, 1777 F Street, NW., Washington, DC 20006, or by electronic mail at *fitzgeralde@fhfb.gov.*

FOR FURTHER INFORMATION CONTACT: Emma J. Fitzgerald, Program Analyst, Office of Supervision, Community Investment & Affordable Housing, by telephone at 202/408–2874, by electronic mail at *fitzgeralde@fhfb.gov*, or by regular mail at the Federal Housing Finance Board, 1777 F Street, NW., Washington, DC 20006. A telecommunications device for deaf persons (TDD) is available at 202/408–2579.

SUPPLEMENTARY INFORMATION:

I. Selection for Community Support Review

Section 10(g)(1) of the Federal Home Loan Bank Act (Bank Act) requires the Finance Board to promulgate

regulations establishing standards of community investment or service Bank members must meet in order to maintain access to long-term advances. *See* 12 U.S.C. 1430(g)(1). The regulations promulgated by the Finance Board must take into account factors such as the Bank member's performance under the Community Reinvestment Act of 1977 (CRA), 12 U.S.C. 2901 *et seq.*, and record of lending to first-time homebuyers. *See* 12 U.S.C. 1430(g)(2). Pursuant to the requirements of section 10(g) of the Bank Act, the Finance Board has promulgated a community support requirement regulation that establishes standards a Bank member must meet in order to maintain access to long-term advances, and review criteria the Finance Board must apply in evaluating a member's community support performance. *See* 12 CFR part 944. The regulation includes standards and criteria for the two statutory factors—CRA performance and record of lending to first-time homebuyers. 12 CFR 944.3. Only members subject to the CRA must meet the CRA standard. 12 CFR 944.3(b). All members, including those not subject to CRA, must meet the first-time homebuyer standard. 12 CFR 944.3(c).

Under the rule, the Finance Board selects approximately one-eighth of the members in each Bank district for community support review each calendar quarter. 12 CFR 944.2(a). The Finance Board will not review an institution's community support performance until it has been a Bank member for at least one year. Selection for review is not, nor should it be construed as, any indication of either the financial condition or the community support performance of the member.

Each Bank member selected for review must complete a Community Support Statement and submit it to the Finance Board by the December 13, 2002 deadline prescribed in this notice. 12 CFR 944.2(b)(1)(ii) and (c). On or before November 12, 2002, each Bank will notify the members in its district that have been selected for the 2002–03 third quarter community support review cycle that they must complete and submit to the Finance Board by the deadline a Community Support Statement. 12 CFR 944.2(b)(2)(i). The member's Bank will provide a blank Community Support Statement Form, which also is available on the Finance Board's Web site: *http://www.fhfb.gov.* Upon request, the member's Bank also will provide assistance in completing the Community Support Statement.

The Finance Board has selected the following members for the 2002–03 third quarter community support review cycle:

Member	City	State
Federal Home Loan Bank of Boston—District 1		
Collinsville Savings Society	Collinsville	Connecticut.
The Guilford Savings Bank	Guilford	Connecticut.
Tolland Bank	Vernon	Connecticut.
Northwest Community Bank	Winsted	Connecticut.
Bar Harbor Banking and Trust Company	Bar Harbor	Maine.
Calais Federal Savings and Loan Association	Calais	Maine.
Camden National Bank	Camden	Maine.
Damariscotta Bank and Trust Company	Damariscotta	Maine.
Franklin Savings Bank	Farmington	Maine.
Katahdin Trust Company	Patten	Maine.
Peoples Heritage Bank, N.A	Portland	Maine.
Rockland Savings & Loan Association	Rockland	Maine.
Abington Savings Bank	Abington	Massachusetts.
Athol Savings Bank	Athol	Massachusetts.
Boston Bank of Commerce	Boston	Massachusetts.
Capital Crossing Bank	Boston	Massachusetts.
Security Federal Savings Bank	Brockton	Massachusetts.
The Canton Institution for Savings, The Bank of Canton	Canton	Massachusetts.
Clinton Savings Bank	Clinton	Massachusetts.
Danvers Savings Bank	Danvers	Massachusetts.
Lafayette Federal Savings Bank	Fall River	Massachusetts.
The Falmouth Co-operative Bank	Falmouth	Massachusetts.
Florence Savings Bank	Florence	Massachusetts.
Colonial Co-operative Bank	Gardner	Massachusetts.
Hingham Institution for Savings	Hingham	Massachusetts.
Peoples Savings Bank	Holyoke	Massachusetts.
Roxbury Highland Bank	Jamaica Plain	Massachusetts.
Equitable Co-operative Bank	Lynn	Massachusetts.
Mansfield Co-operative Bank	Mansfield	Massachusetts.
Milford Federal Savings & Loan Association	Milford	Massachusetts.
Newton South Co-operative Bank	Newton	Massachusetts.
Northampton Cooperative Bank	Northampton	Massachusetts.
Colonial Federal Savings Bank	Quincy	Massachusetts.
Reading Co-operative Bank	Reading	Massachusetts.
South Shore Savings Bank	South Weymouth	Massachusetts.
Southbridge Savings Bank	Southbridge	Massachusetts.
Family Federal Savings, F.A	Stow	Massachusetts.
Mechanics Co-Operative Bank	Taunton	Massachusetts.
Hometown Bank, a Cooperative Bank	Webster	Massachusetts.
Woronoco Savings Bank	Westfield	Massachusetts.
Bow Mills Bank and Trust	Bow	New Hampshire.
Citizens Bank New Hampshire	Manchester	New Hampshire.
Newport Federal Savings Bank	Newport	Rhode Island.
National Bank of Middlebury	Middlebury	Vermont.
Union Bank	Morrisville	Vermont.

Member	City	State
Northfield Savings Bank	Northfield	Vermont.
Merchants Bank	South Burlington	Vermont.
Federal Home Loan Bank of New York—District 2		
Audubon Savings Bank	Audubon	New Jersey.
Bogota Savings Bank	Bogota	New Jersey.
Peoples Savings Bank	Bordentown	New Jersey.
Colonial Bank FSB	Bridgeton	New Jersey.
Century Savings Bank	Bridgeton	New Jersey.
NVE Savings Bank	Englewood	New Jersey.
Glen Rock Savings Bank	Glen Rock	New Jersey.
Roma Federal Savings Bank	Hamilton	New Jersey.
Kearny Federal Savings Bank	Kearny	New Jersey.
Schuyler Savings Bank	Kearny	New Jersey.
Lincoln Park Savings & Loan Association	Lincoln Park	New Jersey.
Metuchen Savings Bank	Metuchen	New Jersey.
First Morris Bank and Trust	Morristown	New Jersey.
Boiling Springs Savings Bank	Rutherford	New Jersey.
Gloucester County Federal Savings Bank	Sewell	New Jersey.
Sturdy Savings Bank	Stone Harbor	New Jersey.
Penn Federal Savings Bank	West Orange	New Jersey.
Woodstown National Bank	Woodstown	New Jersey.
Evans National Bank	Angola	New York.
Independence Community Bank	Brooklyn	New York.
Elmira Savings Bank, FSB	Elmira	New York.
Cattaraugus County Bank	Little Valley	New York.
Chinatown Federal Savings Bank	New York	New York.
Abacus Federal Savings Bank	New York	New York.
The Pavilion State Bank	Pavilion	New York.
SI Bank & Trust	Staten Island	New York.
SBU Bank	Utica	New York.
Wallkill Valley FS&LA	Wallkill	New York.
Doral Bank	Catano	Puerto Rico.
Oriental Bank & Trust	San Juan	Puerto Rico.
Federal Home Loan Bank of Pittsburgh—District 3		
Altoona First Savings Bank	Altoona	Pennsylvania.
Pennsylvania State Bank	Camp Hill	Pennsylvania.
First Carnegie Deposit	Carnegie	Pennsylvania.
Coatesville Savings Bank	Coatesville	Pennsylvania.
Slovenian S&LA of Franklin-Conemaugh	Conemaugh	Pennsylvania.
First National Community Bank	Dunmore	Pennsylvania.
Halifax National Bank	Halifax	Pennsylvania.
Peoples National Bank	Hallstead	Pennsylvania.
Polonia Bank	Huntingdon Valley	Pennsylvania.
Mauch Chunk Trust Company	Jim Thorpe	Pennsylvania
1st Summit Bank	Johnstown	Pennsylvania.
Grange National Bank	Laceyville	Pennsylvania.
The First National Bank of McConnellsburg, PA	McConnellsburg	Pennsylvania.
Mifflinburg Bank and Trust Company	Mifflinburg	Pennsylvania.
Union National Community Bank	Mount Joy	Pennsylvania.
The Muncy Bank and Trust Company	Muncy	Pennsylvania.
First Penn Bank	Philadelphia	Pennsylvania.
United American Savings Bank	Pittsburgh	Pennsylvania.
EurekaBank	Pittsburgh	Pennsylvania.
Iron and Glass Bank	Pittsburgh	Pennsylvania.
Slovak Savings Bank	Pittsburgh	Pennsylvania.
Bank Pittsburgh	Pittsburgh	Pennsylvania.
Scottdale Bank and Trust Company	Scottdale	Pennsylvania.
Leesport Bank	Shenandoah	Pennsylvania.
Northwest Savings Bank	Warren	Pennsylvania.
Peoples State Bank of Wyalusing	Wyalusing	Pennsylvania.
City National Bank of West Virginia	Charleston	West Virginia.
Citizens Bank of Morgantown	Morgantown	West Virginia.
First National Bank	Ronceverte	West Virginia.
Advance Financial Savings Bank	Wellsburg	West Virginia.
Federal Home Loan Bank of Atlanta—District 4		
The Exchange Bank of Alabama	Altoona	Alabama.
Bank of Alabama	Birmingham	Alabama.
First Commercial Bank	Birmingham	Alabama.

Member	City	State
New South Federal Savings Bank	Birmingham	Alabama.
First National Bank	Brewton	Alabama.
Central State Bank	Calera	Alabama.
The Camden National Bank	Camden	Alabama.
The Peoples Bank	Clio	Alabama.
The Commercial Bank of Demopolis	Demopolis	Alabama.
Southland Bank	Dothan	Alabama.
The Southern Bank Company	Gadsden	Alabama.
First National Bank	Hamilton	Alabama.
The Headland National Bank	Headland	Alabama.
Frontier National Bank	Lanett	Alabama.
First State Bank	Lineville	Alabama.
First Citizens Bank	Luverne	Alabama.
Citizens Bank, Inc	Robertsdale	Alabama.
The Slocomb National Bank	Slocomb	Alabama.
First Tuskegee Bank	Tuskegee	Alabama.
First Liberty National Bank	Washington	D.C.
Riggs Bank N.A	Washington	D.C.
Wilmington Trust FSB	Wilmington	Delaware.
Pointe Bank	Boca Raton	Florida.
Bankunited, FSB	Coral Gables	Florida.
Bankatlantic	Fort Lauderdale	Florida.
Natbank N.A	Hollywood	Florida.
American Bank and Trust of Polk County	Lake Wales	Florida.
FloridaFirst Bank	Lakeland	Florida.
Orion Bank	Marathon	Florida.
Security Bank, N.A	Margate	Florida.
Eagle National Bank of Miami	Miami	Florida.
Unibank	Miami	Florida.
Kislak National Bank	Miami Lakes	Florida.
Metro Savings Bank, F.S.B	Orlando	Florida.
First Federal Bank of North Florida	Palatka	Florida.
Bay Bank and Trust	Panama City	Florida.
Federal Trust Bank	Sanford	Florida.
Sarasota Bank	Sarasota	Florida.
Capital City Bank	Tallahassee	Florida.
Bay Financial Savings Bank, F.S.B	Tampa	Florida.
Bank of Alapaha	Alapaha	Georgia.
Athens First Bank and Trust Company	Athens	Georgia.
The Summit National Bank	Atlanta	Georgia.
Georgia Bank and Trust Company of Augusta	Augusta	Georgia.
United Community Bank White County	Blairsville	Georgia.
First Georgia Bank	Brunswick	Georgia.
The First Bank of Brunswick	Brunswick	Georgia.
Planters and Citizens Bank	Camilla	Georgia.
Community Bank and Trust	Cornelia	Georgia.
Newton Federal Savings and Loan Association	Covington	Georgia.
Southeastern Bank	Darien	Georgia.
First National Bank of Coffee County	Douglas	Georgia.
Farmers and Merchants Bank	Eatonton	Georgia.
Elberton Federal Savings & Loan Association	Elberton	Georgia.
Bank of Ellaville	Ellaville	Georgia
1st Community Bank	Fairburn	Georgia.
The Citizens Union Bank	Greensboro	Georgia.
The Coastal Bank	Hinesville	Georgia.
Crescent Bank & Trust Company	Jasper	Georgia.
Pineland State Bank	Metter	Georgia.
First National Bank of the South	Milledgeville	Georgia.
Gateway Bank and Trust	Ringgold	Georgia.
Farmers and Merchants Bank	Statesboro	Georgia.
Spivey State Bank	Swainsboro	Georgia.
Commercial Bank	Thomasville	Georgia.
First Federal Savings and Loan Association	Valdosta	Georgia.
Citizens Bank	Warrenton	Georgia.
Severn Savings Bank, F.S.B	Annapolis	Maryland.
Advance Bank	Baltimore	Maryland.
AmericasBank	Baltimore	Maryland.
FedMed Bank, FSB	Baltimore	Maryland.
Fraternity Federal S&L Association	Baltimore	Maryland.
Hamilton Federal S&L Association	Baltimore	Maryland.
Homewood Federal Savings Bank	Baltimore	Maryland.
Leeds Federal Savings Bank	Baltimore	Maryland.
Provident Bank of Maryland	Baltimore	Maryland.
Saint Casimirs Savings Bank	Baltimore	Maryland.

Member	City	State
Presidential Bank, FSB	Bethesda	Maryland.
Peoples Bank of Kent County	Chestertown	Maryland.
The Talbot Bank of Easton	Easton	Maryland.
The Peoples Bank of Elkton	Elkton	Maryland.
Madison and Bradford FS&L Association, Inc	Forest Hills	Maryland.
Eastern Savings Bank, FSB	Hunt Valley	Maryland.
Wyman Park FS&L Association	Lutherville	Maryland.
Valley Bank of Maryland	Owings Mill	Maryland.
Key Bank and Trust	Owings Mills	Maryland.
Enterprise Federal Savings Bank	Oxon Hill	Maryland.
North Arundel Federal Savings Bank, FSB	Pasadena	Maryland.
Baltimore County Savings Bank, F.S.B	Perry Hall	Maryland.
American Bank	Rockville	Maryland.
First Shore FS&L Association	Salisbury	Maryland.
Sykesville Federal Savings Association	Sykesville	Maryland.
Ashburton Federal S & L Association, Inc	Westminster	Maryland.
Equitable Bank	Wheaton	Maryland.
Home Savings Bank, SSB of Eden	Eden	North Carolina.
High Point Bank and Trust Company	High Point	North Carolina.
The Community Bank	Pilot Mountain	North Carolina.
RBC Centura	Rocky Mount	North Carolina.
Piedmont Federal Savings & Loan Association	Winston Salem	North Carolina.
First Palmetto Savings Bank, FSB	Camden	South Carolina.
Spratt Savings and Loan Association	Chester	South Carolina.
Plantation Federal Bank	Pawleys Island	South Carolina.
Woodruff Federal Savings & Loan Association	Woodruff	South Carolina.
Shore Bank	Accomac	Virginia.
Virginia Commerce Bank	Arlington	Virginia.
Bedford Federal Savings Bank	Bedford	Virginia.
First and Citizens Bank	Monterey	Virginia.
Farmers & Merchants Bank, Eastern Shore	Onley	Virginia.
First Federal Savings Bank	Petersburg	Virginia.
Community Bank	Staunton	Virginia.
Southside Bank	Tappahannock	Virginia.
Citizens and Farmers Bank	West Point	Virginia.
Federal Home Loan Bank of Cincinnati—District 5		
Kentucky Home Bank, Inc	Bardstown	Kentucky.
Bank of Clarkson	Clarkson	Kentucky.
Citizens F&SLA of Covington	Covington	Kentucky.
Heritage Community Bank	Danville	Kentucky.
South Central Savings Bank, FSB	Edmonton	Kentucky.
The Peoples Bank of Fleming County	Flemingsburg	Kentucky.
State National Bank of Frankfort	Frankfort	Kentucky.
Fredonia Valley Bank	Fredonia	Kentucky.
First Southern National Bank	Lancaster	Kentucky.
Bank of the Bluegrass and Trust Company	Lexington	Kentucky.
Peoples Security Bank	Louisa	Kentucky.
The First Capital Bank of Kentucky	Louisville	Kentucky.
First FS&LA of Morehead	Morehead	Kentucky.
Commonwealth Bank, F.S.B	Mt. Sterling	Kentucky.
Mount Sterling National Bank	Mt. Sterling	Kentucky.
Traditional Bank, Inc	Mt. Sterling	Kentucky.
Farmers National Bank	Walton	Kentucky.
The Apple Creek Banking Company	Apple Creek	Ohio.
Belmont Savings Bank	Bellaire	Ohio.
The Citizens National Bank of Bluffton	Bluffton	Ohio.
The Brookville Building and Savings Association	Brookville	Ohio.
First Federal Community Bank of Bucyrus	Bucyrus	Ohio.
First Federal S&LA of Centerburg	Centerburg	Ohio.
Columbia Savings Bank	Cincinnati	Ohio.
New Foundation Loan and Building Company	Cincinnati	Ohio.
The Franklin Savings and Loan Company	Cincinnati	Ohio.
Warsaw Federal S&LA of Cincinnati	Cincinnati	Ohio.
Charter One Bank, F.S.B	Cleveland	Ohio.
Third FS&LA of Cleveland	Cleveland	Ohio.
United Midwest Savings Bank	DeGraff	Ohio.
Hicksville Building, Loan and Savings Bank	Hicksville	Ohio.
Merchants National Bank	Hillsboro	Ohio.
NCB, FSB	Hillsboro	Ohio.
Home Savings Bank	Kent	Ohio.
Kenwood Savings Bank	Kenwood	Ohio.
First FS&LA of Lakewood	Lakewood	Ohio.

Member	City	State
Fairfield Federal S&LA of Lancaster	Lancaster	Ohio.
First National Bank	Lebanon	Ohio.
Leesburg Federal Savings Bank	Leesburg	Ohio.
The First Knox Bank of Mount Vernon	Mt. Vernon	Ohio.
New Carlisle Federal Savings Bank	New Carlisle	Ohio.
The Park National Bank	Newark	Ohio.
The First Savings Bank of Norwood	Norwood	Ohio.
American Savings Bank, fsb	Portsmouth	Ohio.
Home City Federal Savings Bank	Springfield	Ohio.
Belmont National Bank	St. Clairsville	Ohio.
Perpetual Federal Savings Bank	Urbana	Ohio.
Liberty Savings Bank, F.S.B	Wilmington	Ohio.
North Valley Bank	Zanesville	Ohio.
Farmers & Merchants Bank	Adamsville	Tennessee.
Bank of Alamo	Alamo	Tennessee.
First South Credit Union	Bartlett	Tennessee.
Bank of Crockett	Bells	Tennessee.
First Farmers and Merchants National Bank	Columbia	Tennessee.
Decatur County Bank	Decaturville	Tennessee.
First Independent Bank	Gallatin	Tennessee.
Chester County Bank	Henderson	Tennessee.
The Bank of Jackson	Jackson	Tennessee.
People's Community Bank	Johnson City	Tennessee.
Wilson Bank and Trust	Lebanon	Tennessee.
First National Bank of the Cumberlands	Livingston	Tennessee.
Trust One Bank	Memphis	Tennessee.
Citizens Bank	New Tazewell	Tennessee.
Newport Federal Bank	Newport	Tennessee.
Citizens National Bank	Sevierville	Tennessee.
Federal Home Loan Bank of Indianapolis—District 6		
Independent Federal Credit Union	Anderson	Indiana.
Boonville Federal Savings Bank	Boonville	Indiana.
First State Bank	Brazil	Indiana.
Riddell National Bank	Brazil	Indiana.
Union Savings and Loan Association	Connersville	Indiana.
Union FS&LA	Crawfordsville	Indiana.
First Federal Savings Bank	Evansville	Indiana.
Pacesetter Bank	Hartford City	Indiana.
MetroBank	Indianapolis	Indiana.
Kentland Federal Savings and Loan Association	Kentland	Indiana.
The La Porte Savings Bank	La Porte	Indiana.
Logansport Savings Bank, FSB	Logansport	Indiana.
Home Bank, F.S.B	Martinsville	Indiana.
Peoples Bank SB	Munster	Indiana.
Farmers State Bank	New Ross	Indiana.
First Bank Richmond, S.B	Richmond	Indiana.
Mid-Southern Savings Bank, FSB	Salem	Indiana.
Owen County State Bank	Spencer	Indiana.
Grant County State Bank	Swayzee	Indiana.
Liberty Savings Bank FSB	Whiting	Indiana.
Homestead Savings Bank, FSB	Albion	Michigan.
Commercial Bank	Alma	Michigan.
Fidelity Bank	Birmingham	Michigan.
Tri-County Bank	Brown City	Michigan.
Monarch Community Bank	Coldwater	Michigan.
Paramount Bank	Farmington Hills	Michigan.
Select Bank	Grand Rapids	Michigan.
Peoples State Bank	Hamtramck	Michigan.
Union Bank	Lake Odessa	Michigan.
Marshall Savings Bank, FSB	Marshall	Michigan.
Peoples State Bank of Munising	Munising	Michigan.
New Buffalo Savings Bank	New Buffalo	Michigan.
Thumb National Bank and Trust	Pigeon	Michigan.
Citizens First Savings Bank	Port Huron	Michigan.
LaSalle Federal Savings Bank	St. Joseph	Michigan.
The First National Bank of Three Rivers	Three Rivers	Michigan.
First National Bank	Wakefield	Michigan.
Federal Home Loan Bank of Chicago—District 7		
First Community Bank and Trust	Beecher	Illinois.
First State Bank of Beecher City	Beecher City	Illinois.

Member	City	State
Greater Chicago Bank	Bellwood	Illinois.
The First National Bank in Carlyle	Carlyle	Illinois.
BankChampaign, N.A	Champaign	Illinois.
Alliance, FSB	Chicago	Illinois.
Community Savings Bank	Chicago	Illinois.
Illinois Service FS&LA	Chicago	Illinois.
Labe Bank	Chicago	Illinois.
NAB Bank	Chicago	Illinois.
North Federal Savings Bank	Chicago	Illinois.
Oak Bank	Chicago	Illinois.
Pulaski Savings Bank	Chicago	Illinois.
South Central Bank	Chicago	Illinois.
Washington Federal Bank for Savings	Chicago	Illinois.
Family Federal Savings of Illinois	Cicero	Illinois.
West Town Savings Bank	Cicero	Illinois.
The John Warner Bank	Clinton	Illinois.
The Elizabeth State Bank	Elizabeth	Illinois.
Flora Bank & Trust	Flora	Illinois.
Community Bank Wheaton/Glen Ellyn	Glen Ellyn	Illinois.
Illinois State Bank	Lake in the Hills	Illinois.
Heritage State Bank	Lawrenceville	Illinois.
Fairfield Savings Bank, F.S.B	Long Grove	Illinois
1st State Bank of Mason City	Mason City	Illinois.
Mazon State Bank	Mazon	Illinois.
McHenry Savings Bank	McHenry	Illinois.
The City National Bank of Metropolis	Metropolis	Illinois.
First National Bank	Moline	Illinois.
Brown County State Bank	Mount Sterling	Illinois.
Wabash Savings Bank	Mt. Carmel	Illinois.
The Farmers Bank of Mt. Pulaski	Mt. Pulaski	Illinois.
Regency Savings Bank	Oak Park	Illinois.
BankFinancial, FSB	Olympia Fields	Illinois.
Pekin Savings Bank	Pekin	Illinois.
The Herget National Bank of Pekin	Pekin	Illinois.
Peru Federal Savings Bank	Peru	Illinois.
National Bank of Petersburg	Petersburg	Illinois.
Citizens State Bank of Shipman	Shipman	Illinois.
Farmers State Bank of Somonauk	Somonauk	Illinois.
Marine Bank, Springfield	Springfield	Illinois.
Town & Country Bank of Springfield	Springfield	Illinois.
Tremont Savings Bank	Tremont	Illinois.
Banner Banks	Birnamwood	Wisconsin.
Community First Bank	Boscobel	Wisconsin.
North Shore Bank, FSB	Brookfield	Wisconsin.
Dorchester State Bank	Dorchester	Wisconsin.
PremierBan	Fort Atkinson	Wisconsin.
Capital Bank	Green Bay	Wisconsin.
Green Lake State Bank	Green Lake	Wisconsin.
PyraMax Bank	Greenfield	Wisconsin.
Greenleaf Wayside Bank	Greenleaf	Wisconsin.
Hustisford State Bank	Hustisford	Wisconsin.
Mid America Bank	Janesville	Wisconsin.
Union State Bank	Kewaunee	Wisconsin.
Bank of Lake Mills	Lake Mills	Wisconsin.
Bank of Little Chute	Little Chute	Wisconsin.
Rural American Bank—Luck	Luck	Wisconsin.
AnchorBank, fsb	Madison	Wisconsin.
Home Savings Bank	Madison	Wisconsin.
The Peoples State Bank	Mazomanie	Wisconsin.
Bremer, National Association	Menomonie	Wisconsin.
Middleton Community Bank	Middleton	Wisconsin.
Milton Savings Bank	Milton	Wisconsin.
First Community Bank	Milton	Wisconsin.
Maritime Savings Bank	Milwaukee	Wisconsin.
Mutual Savings Bank	Milwaukee	Wisconsin.
West Pointe Bank	Oshkosh	Wisconsin.
Wisconsin State Bank	Random Lake	Wisconsin.
The Reedsburg Bank	Reedsburg	Wisconsin.
Dairy State Bank	Rice Lake	Wisconsin.
Community Business Bank	Sauk City	Wisconsin.
Baylake Bank	Sturgeon Bay	Wisconsin.
Superior Savings Bank	Superior	Wisconsin.
Farmers and Merchants Bank	Tomah	Wisconsin.
Bank of Waunakee	Waunakee	Wisconsin.

Member	City	State
West Bend Savings Bank	West Bend	Wisconsin.
First Citizens State Bank	Whitewater	Wisconsin.
Federal Home Loan Bank of Des Moines—District 8		
Raccoon Valley State Bank	Adel	Iowa.
Peoples State Bank	Albia	Iowa.
Community Bank	Alton	Iowa.
Bank Iowa	Altoona	Iowa.
First National Bank	Ames	Iowa.
Farmers & Traders Savings Bank	Bancroft	Iowa.
Chelsea Savings Bank	Belle Plaine	Iowa.
Boone Bank & Trust Company	Boone	Iowa.
Prairie State Bank	Brunsville	Iowa.
Guaranty Bank and Trust Company	Cedar Rapids	Iowa.
Cherokee State Bank	Cherokee	Iowa.
First State Bank	Conrad	Iowa.
Dubuque Bank & Trust Company	Dubuque	Iowa.
First Federal Savings Bank of Iowa	Fort Dodge	Iowa.
Gibson Savings Bank	Gibson	Iowa.
Mills County Bank, N.A	Glenwood	Iowa.
Security State Bank	Guttenburg	Iowa.
Farmers Savings Bank	Halbur	Iowa.
Farmers State Bank	Hawarden	Iowa.
First State Bank	Hawarden	Iowa.
Humboldt Trust & Savings Bank	Humboldt	Iowa.
State Central Bank	Keokuk	Iowa.
Heritage Bank	Marion	Iowa.
F&M Bank—Iowa	Marshalltown	Iowa.
Security State Bank	Red Oak	Iowa.
Lincoln Savings Bank	Reinbeck	Iowa.
Sibley State Bank	Sibley	Iowa.
Security State Bank	Stuart	Iowa.
First State Bank	Sumner	Iowa.
Farmers Savings Bank & Trust-Vinton	Vinton	Iowa.
Webster City Federal Savings Bank	Webster City	Iowa.
Community State Bank	West Branch	Iowa.
Citizens State Bank	Wyoming	Iowa.
Farmers State Bank of Adams	Adams	Minnesota.
Bremer Bank, National Association	Alexandria	Minnesota.
State Bank of Aurora	Aurora	Minnesota.
State Bank of Bellingham	Bellingham	Minnesota.
Star Bank, N.A	Bertha	Minnesota.
Farmers and Merchants State Bank	Blooming Prairie	Minnesota.
First National Bank of Blue Earth	Blue Earth	Minnesota.
Canton State Bank	Canton	Minnesota.
First National Bank of Deer River	Deer River	Minnesota.
The First National Bank of Deerwood	Deerwood	Minnesota.
State Bank of Kimball	Kimball	Minnesota.
Lake Elmo Bank	Lake Elmo	Minnesota.
First National Bank Le Center	Le Center	Minnesota.
First State Bank of LeRoy	LeRoy	Minnesota.
Community Federal Savings & Loan Association	Little Falls	Minnesota.
Prairie Sun Bank	Milan	Minnesota.
Peoples National Bank of Mora	Mora	Minnesota.
First Federal Savings Bank	Morris	Minnesota.
United Prairie Bank	New Ulm	Minnesota.
Community National Bank	North Branch	Minnesota.
Northwoods Bank of Minnesota	Park Rapids	Minnesota.
Pine City State Bank	Pine City	Minnesota.
Prior Lake State Bank	Prior Lake	Minnesota.
Minnwest Bank, MV	Redwood Falls	Minnesota.
First Independent Bank	Russell	Minnesota.
United Prairie Bank	Spicer	Minnesota.
Highland Bank	St. Michael	Minnesota.
First National Bank	Thief River Falls	Minnesota.
State Bank of Tower	Tower	Minnesota.
Security State Bank of Wanamingo	Wanamingo	Minnesota.
Belgrade State Bank	Belgrade	Missouri.
Ozark Mountain Bank	Branson	Missouri.
O'Bannon Banking Company	Buffalo	Missouri.
First National Bank	Camdenton	Missouri.
Horizon State Bank	Cameron	Missouri.
Bank 21	Carrollton	Missouri.

Member	City	State
State Bank of Missouri	Concordia	Missouri.
Eminence Security Bank	Eminence	Missouri.
Rockwood Bank	Eureka	Missouri.
Allen Bank & Trust Company	Harrisonville	Missouri.
Sun Security Bank of America	Holts Summit	Missouri.
Jonesburg State Bank	Jonesburg	Missouri.
Missouri Bank & Trust Company	Kansas City	Missouri.
Blue Ridge Bank & Trust Company	Kansas City	Missouri.
Kearney Commercial Bank	Kearney	Missouri.
Neosho Savings and Loan Association, F.A	Neosho	Missouri.
Bank of New Madrid	New Madrid	Missouri.
Charter 1 Bank	Owensville	Missouri.
Ozark Bank	Ozark	Missouri.
Progressive Ozark Bank	Salem	Missouri.
First National Bank of Sarcoxie	Sarcoxie	Missouri.
Security Bank and Trust Company	Scott City	Missouri.
Community State Bank	Shelbina	Missouri.
Central West End Bank	St. Louis	Missouri.
Missouri State Bank and Trust Company	St. Louis	Missouri.
Community Bank, NA	Summersville	Missouri.
Peoples Bank & Trust Company	Troy	Missouri.
The Bank of Urbana	Urbana	Missouri.
The Missouri Bank	Warrenton	Missouri.
Security Bank of Pulaski County	Waynesville	Missouri.
Farmers & Merchants Bank of Wright City	Wright City	Missouri.
First State Bank of North Dakota	Arthur	North Dakota.
Security State Bank of North Dakota	Jamestown	North Dakota.
The Goose River Bank	Mayville	North Dakota.
Bremer Bank, NA	Minot	North Dakota.
The First State Bank of Munich	Munich	North Dakota.
Liberty State Bank	Powers Lake	North Dakota.
Dacotah Bank	Valley City	North Dakota.
Dakota Heritage State Bank	Chancellor	South Dakota.
The First Western Bank Custer	Custer	South Dakota.
Reliabank Dakota	Estelline	South Dakota.
Campbell County Bank, Inc	Herreid	South Dakota.
Plains Commerce Bank	Hoven	South Dakota.
First State Bank of Miller	Miller	South Dakota.
CorTrust Bank, National Association	Mitchell	South Dakota.
American State Bank	Oldham	South Dakota.
American State Bank of Pierre	Pierre	South Dakota.
Farmers and Merchants State Bank	Plankinton	South Dakota.
First Premier Bank	Sioux Falls	South Dakota.
Valley Bank, N.A	Sioux Falls	South Dakota.
The First Western Bank Sturgis	Sturgis	South Dakota.
Commercial State Bank	Wagner	South Dakota.
First Western Bank Wall	Wall	South Dakota.
Federal Home Loan Bank of Dallas—District 9		
Elk Horn Bank & Trust Company	Arkadelphia	Arkansas.
First National Bank of Howard County	Dierks	Arkansas.
Merchants and Farmers Bank	Dumas	Arkansas.
Planters & Merchants Bank	Gillett	Arkansas.
Calhoun County Bank	Hampton	Arkansas.
Community First Bank	Harrison	Arkansas.
The Cleburne County Bank	Heber Springs	Arkansas.
One Bank & Trust	Little Rock	Arkansas.
Pinnacle Bank	Little Rock	Arkansas.
Pulaski Bank & Trust Company	Little Rock	Arkansas.
Farmers Bank & Trust	Magnolia	Arkansas.
Union Bank and Trust Company	Monticello	Arkansas.
Newport Federal Savings Bank	Newport	Arkansas.
Priority Bank	Ozark	Arkansas.
United Bank	Springdale	Arkansas.
Farmers & Merchants Bank	Stuttgart	Arkansas.
Abbeville Building and Loan	Abbeville	Louisiana.
The Business Bank of Baton Rouge	Baton Rouge	Louisiana.
Community Trust Bank	Choudrant	Louisiana.
Crowley Building & Loan Association	Crowley	Louisiana.
United Community Bank	Gonzales	Louisiana.
Central Progressive Bank	Hammond	Louisiana.
The Union Bank	Marksville	Louisiana.
Horizons Bank	Monroe	Louisiana.

Member	City	State
IberiaBank	New Iberia	Louisiana.
Crescent Bank & Trust	New Orleans	Louisiana.
Fidelity Homestead Association	New Orleans	Louisiana.
Citizens Bank & Trust Company	Plaquemine	Louisiana.
Iberville Building & Loan Association	Plaquemine	Louisiana.
Bank of Zachary	Zachary	Louisiana.
Magnolia State Bank	Bay Springs	Mississippi.
State Bank and Trust Company	Greenwood	Mississippi.
The First National Bank of South Mississippi	Hattiesburg	Mississippi.
Grand Bank for Savings, FSB	Hattiesburg	Mississippi.
Trustmark National Bank	Jackson	Mississippi.
OmniBank	Jackson	Mississippi.
Citizens Bank & Trust Company	Louisville	Mississippi.
BankFirst Financial Services	Macon	Mississippi.
Bank of New Albany	New Albany	Mississippi.
Bank of Okalona	Okalona	Mississippi.
First Federal Savings and Loan	Pascagoula	Mississippi.
Bank of Yazoo City	Yazoo City	Mississippi.
Union Savings Bank	Albuquerque	New Mexico.
Western Bank of Clovis	Clovis	New Mexico.
Gallup Federal Savings Bank	Gallup	New Mexico.
Citizens Bank of Las Cruces	Las Cruces	New Mexico.
The Bank of Las Vegas	Las Vegas	New Mexico.
Century Bank, FSB	Santa Fe	New Mexico.
IBM Texas Employees Federal Credit Union	Austin	Texas.
Franklin Bank, SSB	Austin	Texas.
Lamar Bank	Beaumont	Texas.
The First National Bank of Beeville	Beeville	Texas.
Bonham State Bank	Bonham	Texas.
Shelby Savings Bank, ssb	Center	Texas.
Chappell Hill Bank	Chappell Hill	Texas.
Charter Bank Northwest	Corpus Christi	Texas.
First Security State Bank	Cranfils Gap	Texas.
First National Bank of Crockett	Crockett	Texas.
First National Bank in Dalhart	Dalhart	Texas.
First State Bank of North Texas	Dallas	Texas.
Inwood National Bank	Dallas	Texas.
First Command Bank	Fort Worth	Texas.
Pioneer National Bank	Fredericksburg	Texas.
First State Bank	Happy	Texas.
Henderson Federal Savings Association	Henderson	Texas.
Coastal Bank ssb	Houston	Texas.
Community State Bank	Houston	Texas.
Encore Bank	Houston	Texas.
Riverway Bank	Houston	Texas.
State Bank	La Grange	Texas.
Spring Hill State Bank	Longview	Texas.
Angelina Savings Bank, FSB	Lufkin	Texas.
Northeast National Bank	Mesquite	Texas.
Guaranty Bank	Mt. Pleasant	Texas.
Olympic Savings Association	Refugio	Texas.
First State Bank	Stratford	Texas.
Alliance Bank	Sulphur Springs	Texas.
First State Bank Central Texas	Temple	Texas.
First Federal Savings & Loan	Tyler	Texas.
First National Bank of Weatherford	Weatherford	Texas.
Horizon Capital Bank	Webster	Texas.
Federal Home Loan Bank of Topeka—District 10		
Colorado Central Credit Union	Arvada	Colorado.
Valley Bank & Trust	Brighton	Colorado.
Farmers State Bank of Calhan	Calhan	Colorado.
BankWest	Castle Rock	Colorado.
Castle Rock Bank	Castle Rock	Colorado.
FirstBank of Colorado Springs	Colorado Springs	Colorado
1st National Bank of Durango	Durango	Colorado.
First National Bank of Flagler	Flagler	Colorado.
Morgan Federal Bank	Fort Morgan	Colorado.
Colorado Federal Savings Bank	Greenwood Village	Colorado.
Colorado East Bank & Trust	Lamar	Colorado.
First National Bank in Lamar	Lamar	Colorado.
The First National Bank of Anthony	Anthony	Kansas.
Guaranty State Bank & Trust Company	Beloit	Kansas.

Member	City	State
Beverly State Bank	Beverly	Kansas.
Caldwell State Bank	Caldwell	Kansas.
The Elk State Bank	Clyde	Kansas.
Peoples Exchange Bank	Concordia	Kansas.
Citizens Bank, N.A	Fort Scott	Kansas.
Citizens State Bank and Trust Company	Hiawatha	Kansas.
Central Bank and Trust Company	Hutchinson	Kansas.
Inter-State FS&LA of Kansas City	Kansas City	Kansas.
Kanza Bank	Kingman	Kansas.
Citizens Savings and Loan Association, FSB	Leavenworth	Kansas.
First Savings Bank, F.S.B	Manhattan	Kansas.
First State Bank	Norton	Kansas.
First FS&LA of Olathe	Olathe	Kansas.
First Option Bank	Osawatomie	Kansas.
Valley State Bank	Roeland Park	Kansas.
The Roxbury Bank	Roxbury	Kansas.
The Columbian Bank and Trust Company	Topeka	Kansas.
The First National Bank	Ainsworth	Nebraska.
Community Bank	Alma	Nebraska.
Auburn State Bank	Auburn	Nebraska.
Bruning State Bank	Bruning	Nebraska.
Butte State Bank	Butte	Nebraska.
South Central State Bank	Campbell	Nebraska.
First National Bank and Trust Company	Columbus	Nebraska.
City Bank & Trust Company	Crete	Nebraska.
Cedar Security Bank	Fordyce	Nebraska.
Pinnacle Bank	Gretna	Nebraska.
Security Home Bank	Malmo	Nebraska.
Security National Bank of Omaha	Omaha	Nebraska.
Commercial Federal Bank	Omaha	Nebraska.
Horizon Bank	Waverly	Nebraska.
Bank of Yutan	Yutan	Nebraska.
First National Bank & Trust Company of Ardmore	Ardmore	Oklahoma.
Citizens Security Bank & Trust Company	Bixby	Oklahoma.
Chickasha Bank & Trust Company	Chickasha	Oklahoma.
First Bank and Trust	Clinton	Oklahoma.
The First Bank of Haskell	Haskell	Oklahoma.
Republic Bank of Norman	Norman	Oklahoma.
First National Bank of Oklahoma	Oklahoma City	Oklahoma.
Lakeside State Bank	Oologah	Oklahoma.
First American Bank and Trust Company	Purcell	Oklahoma.
Sulphur Community Bank	Sulphur	Oklahoma.
Federal Home Loan Bank of San Francisco—District 11		
Valley Independent Bank	El Centro	California.
Xerox Federal Credit Union	El Segundo	California.
Fremont Bank	Fremont	California.
Commercial Capital Bank, FSB	Irvine	California.
American First Credit Union	La Habra	California.
International City Bank	Long Beach	California.
California National Bank	Los Angeles	California.
Fidelity Federal Bank, A FSB	Los Angeles	California.
First Commerce Bank	Los Angeles	California.
National Bank of California	Los Angeles	California.
Preferred Bank	Los Angeles	California.
U.S. Trust Company of CA	Los Angeles	California.
Modesto Commerce Bank	Modesto	California.
The Vintage Bank	Napa	California.
Oak Valley Community Bank	Oakdale	California.
United Labor Bank	Oakland	California.
Palm Desert National Bank	Palm Desert	California.
Mid-Peninsula Bank	Palo Alto	California.
Malaga Bank	Palos Verdes Estates	California.
PFF Bank & Trust	Pomona	California.
Summit State Bank	Rohnert Park	California.
California S&L, AFA	San Francisco	California.
Pacific Business Bank	Santa Fe Springs	California.
Monterey Bank Bay	Watsonville	California.
Federal Home Loan Bank of Seattle—District 12		
Northrim Bank	Anchorage	Alaska.
Northern Schools Federal Credit Union	Fairbanks	Alaska.

Member	City	State
BankPacific, Ltd.	Hagatna	Guam.
Finance Factors, Limited	Honolulu	Hawaii.
Hawaii State Federal Credit Union	Honolulu	Hawaii.
The Bank of Commerce	Idaho Falls	Idaho.
Ireland Bank	Malad	Idaho.
First Federal Savings Bank of Twin Falls	Twin Falls	Idaho.
United Bank, N.A	Absarokee	Montana.
Wells Fargo Bank Wyoming, N.A	Billings	Montana.
Pioneer Federal Savings and Loan Association	Dillon	Montana.
Pacific Continental Bank	Eugene	Oregon.
First FS&LA of McMinnville	McMinnville	Oregon.
Albina Community Bank	Portland	Oregon.
Community First Bank	Prineville	Oregon.
Bank of American Fork	American Fork	Utah.
Home Savings Bank	Salt Lake City	Utah.
TransWest Credit Union	Salt Lake City	Utah.
Horizon Bank	Bellingham	Washington.
Bank of Fairfield	Fairfield	Washington.
Timberland Bank	Hoquiam	Washington.
Kitsap Bank	Port Orchard	Washington.
Puyallup Valley Bank	Puyallup	Washington.
First Savings Bank of Renton	Renton	Washington.
HomeStreet Bank	Seattle	Washington.
Washington First International Bank	Seattle	Washington.
Bank of Star Valley	Afton	Wyoming.
Wyoming Bank and Trust Company	Buffalo	Wyoming.
Oregon Trail Bank	Guernsey	Wyoming.
First National Bank & Trust	Powell	Wyoming.
First National Bank, Torrington	Torrington	Wyoming.
Pinnacle Bank, Wyoming	Torrington	Wyoming.

II. Public Comments

To encourage the submission of public comments on the community support performance of Bank members, on or before November 12, 2002, each Bank will notify its Advisory Council and nonprofit housing developers, community groups, and other interested parties in its district of the members selected for community support review in the 2002–03 third quarter review cycle. 12 CFR 944.2(b)(2)(ii). In reviewing a member for community support compliance, the Finance Board will consider any public comments it has received concerning the member. 12 CFR 944.2(d). To ensure consideration by the Finance Board, comments concerning the community support performance of members selected for the 2002–03 third quarter review cycle must be delivered to the Finance Board on or before the December 13, 2002 deadline for submission of Community Support Statements.

By the Federal Housing Finance Board.

Dated: October 18, 2002.

Arnold Intrater,

General Counsel.

[FR Doc. 02–26925 Filed 10–24–02; 8:45 am]

BILLING CODE 6725–01–P

DEPARTMENT OF HEALTH AND HUMAN SERVICES

Centers for Disease Control and Prevention

[60Day–03–05]

Proposed Data Collections Submitted for Public Comment and Recommendations

In compliance with the requirement of section 3506(c)(2)(A) of the Paperwork Reduction Act of 1995 for opportunity for public comment on proposed data collection projects, the Centers for Disease Control and Prevention (CDC) will publish periodic summaries of proposed projects. To request more information on the proposed projects or to obtain a copy of the data collection plans and instruments, call the CDC Reports Clearance Officer on (404) 498–1210.

Comments are invited on: (a) Whether the proposed collection of information is necessary for the proper performance of the functions of the agency, including whether the information shall have practical utility; (b) the accuracy of the agency's estimate of the burden of the proposed collection of information; (c) ways to enhance the quality, utility, and clarity of the information to be collected; and (d) ways to minimize the burden of the collection of information on respondents, including through the use of automated collection techniques or other forms of information technology. Send comments to Seleda Perryman, CDC Assistant Reports Clearance Officer, 1600 Clifton Road, MS–D24, Atlanta, GA 30333. Written comments should be received within 60 days of this notice.

Proposed Project: Microbial Contamination of Produce: A Field Study of the Lower Rio Grande Valley, OMB No. 0920–0487—Extension—National Center for Environmental Health (NCEH), Centers for Disease Control and Prevention (CDC).

Background

Foodborne diseases are common; an estimated 6–33 million cases occur each year in the United States. Although most of these infections cause mild illness, severe infections and serious complications do occur. The public health challenges of foodborne diseases are changing rapidly. In recent years, new and emerging foodborne pathogens have been described and changes in food production have led to new food safety concerns. Foodborne diseases have been associated with many different foods, including recent outbreaks linked to contaminated fresh fruits (*e.g.,* cantaloupe, strawberries) and vegetables (*e.g.,* leaf lettuce, alfalfa sprouts).

NCEH proposes to conduct a study to determine what specific produce

processing practices are associated with fecal contamination of fruits and vegetables. Handling and processing methods used in the produce industry may increase the risk that these foods will become contaminated with fecal matter. The study will describe the chain of processing-shipping practices for five vulnerable produce groups (leafy greens, leafy herbs, green onions, cabbage, melon/cantaloupe). Critical practices where contamination with foodborne pathogens is likely will be identified by measuring the microbial quality of produce at each step during processing. Sources of fecal contamination will be determined by measuring the microbial quality of process water, measuring fecal indicator organisms on hand rinses from packing shed laborers, and conducting sanitary surveys of sources of human and animal feces in and around the processing areas. CDC, National Center for Environmental Health is requesting a 3-year clearance. There is no cost to respondents.

Respondents	No. of respondents	No. of responses/ respondent	Avg. burden/ response (in hours)	Total burden (in hours)
Packing Facility Recruiting visit	20	1	30/60	10
Packing Shed Manager Interview (in person)	20	2	30/60	20
Hand Rinse Sample Collection	100	2	30/60	100
Total				130

Dated: October 16, 2002.

John Moore,

Acting Associate Director, Policy, Planning and Evaluation, Centers for Disease Control and Prevention.

[FR Doc. 02–27198 Filed 10–24–02; 8:45 am]

BILLING CODE 4163–18–P

DEPARTMENT OF HEALTH AND HUMAN SERVICES

Centers for Disease Control and Prevention

[60 Day–03–06]

Proposed Data Collections Submitted for Public Comment and Recommendations

In compliance with the requirement of section 3506(c)(2)(A) of the Paperwork Reduction Act of 1995 for opportunity for public comment on proposed data collection projects, the Centers for Disease Control and Prevention (CDC) will publish periodic summaries of proposed projects. To request more information on the proposed projects or to obtain a copy of the data collection plans and instruments, call the CDC Reports Clearance Officer on (404) 498–1210.

Comments are invited on: (a) Whether the proposed collection of information is necessary for the proper performance of the functions of the agency, including whether the information shall have practical utility; (b) the accuracy of the agency's estimate of the burden of the proposed collection of information; (c) ways to enhance the quality, utility, and clarity of the information to be collected; and (d) ways to minimize the burden of the collection of information on respondents, including through the use of automated collection techniques or other forms of information technology. Send comments to Seleda Perryman, CDC Assistant Reports Clearance Officer, 1600 Clifton Road, MS–D24, Atlanta, GA 30333. Written comments should be received within 60 days of this notice.

Proposed Project: Domestic Violence Prevention Enhancement and Leadership through Alliances (DELTA)—New—National Center for Injury Prevention and Control (NCIPC), Centers for Disease Control and Prevention (CDC).

Domestic violence is a large, potentially preventable source of physical and emotional harm for women, children, and families. One promising approach to domestic violence prevention is the coordinated community response (CCR) model wherein multiple agencies within a community come together to work collectively on domestic violence issues. However, many CCRs formed to date focus on responding to rather than preventing acts of violence. The CDC is launching the Domestic Violence Prevention Enhancement and Leadership Through Alliances (DELTA) demonstration program to stimulate the development of prevention-focused programs and the diffusion of the programs into the existing operations of CCRs, using nine state domestic violence coalitions as intermediaries.

This project, conducted by Mathematica Policy Research, Inc. (MPR) will first identify and describe each state's CCR structures and operations, then evaluate the DELTA Program's success in developing and disseminating prevention enhancements to CCRs. Mathematica will use an environmental scan to identify the full population of CCRs in each state, as well as profile the organizational, political, and economic landscape in which the CCRs operate. This information will assist CDC and the state coalitions in developing prevention enhancements that are responsive to the capacities and circumstances of local CCRs while at the same time providing baseline measures to facilitate and evaluation of the DELTA program. The DELTA program evaluation will then use these baseline measures, together with additional data collected each year throughout program implementation to assess how well the program performs in strengthening collaborative activity across domestic violence programs, developing prevention enhancements and incorporating them into current CCR operations, and institutionalizing organizational changes that will sustain primary prevention as part of the everyday workings of state coalitions and CCRs. Mathematica will conduct interviews with the nine state coalitions that are DELTA grantees every six months and conduct an annual survey of all local CCRs in the nine DELTA states. MPR will also conduct a one-time survey of state domestic violence coalitions and up to ten other organizations in each of the 41 non-DELTA states. There is no cost to respondents for any of these surveys.

Respondents	No. of respondents	No. of responses/ respondent	Avg. burden/ response (in hrs.)	Total burden (in hrs.)
Telephone interviews with administrators of state domestic violence coalitions in DELTA states	9	7	30/60	32
Telephone interviews with other organizations	36	1	30/60	18
Mail Survey of local CCRs in DELTA states	288	4	20/60	384
Mail survey of state domestic violence coalitions in non-Delta states	41	1	30/60	21
Mail survey of other state agencies or advocacy groups in non-Delta states	123	1	30/60	62
Telephone interviews with CCRs in Delta states	40	1	30/60	20
Total				537

Dated: October 16, 2002.

John Moore,

Acting Associate Director for Policy, Planning and Evaluation, Centers for Disease Control and Prevention.

[FR Doc. 02–27199 Filed 10–24–02; 8:45 am]

BILLING CODE 4163–18–P

DEPARTMENT OF HEALTH AND HUMAN SERVICES

Centers for Medicare and Medicaid Services

[Document Identifiers: CMS–10041]

Agency Information Collection Activities: Proposed Collection; Comment Request

AGENCY: Centers for Medicare and Medicaid Services, HHS.

In compliance with the requirement of section 3506(c)(2)(A) of the Paperwork Reduction Act of 1995, the Centers for Medicare and Medicaid Services (CMS) (formerly known as the Health Care Financing Administration (HCFA)), Department of Health and Human Services, is publishing the following summary of proposed collections for public comment. Interested persons are invited to send comments regarding this burden estimate or any other aspect of this collection of information, including any of the following subjects: (1) The necessity and utility of the proposed information collection for the proper performance of the agency's functions; (2) the accuracy of the estimated burden; (3) ways to enhance the quality, utility, and clarity of the information to be collected; and (4) the use of automated collection techniques or other forms of information technology to minimize the information collection burden.

Type of Information Collection Request: Extension of a currently approved collection; *Title of Information Collection:* Long Term Care Awareness Project; *Form No.:* CMS–10041 (OMB# 0938–0825); *Use:* CMS–CBC needs to collect these data to pilot test a national campaign to educate current and future Medicare beneficiaries and their families about long term health care needs, as requested in the Presidential Initiative for Fiscal Year 2000 Budget. Project findings will be used to design and implement a nationwide campaign. Respondents will be from two groups: 55–70 year-olds and persons with disability who are 18–64 years of age; *Frequency:* Quarterly; *Affected Public:* Individuals or Households; *Number of Respondents:* 2000; *Total Annual Responses:* 2000; *Total Annual Hours:* 667.

To obtain copies of the supporting statement and any related forms for the proposed paperwork collections referenced above, access CMS's Web site address at *http://www.hcfa.gov/regs/prdact95.htm*, or e-mail your request, including your address, phone number, OMB number, and CMS document identifier, to *Paperwork@hcfa.gov*, or call the Reports Clearance Office on (410) 786–1326. Written comments and recommendations for the proposed information collections must be mailed within 60 days of this notice directly to the CMS Paperwork Clearance Officer designated at the following address: CMS, Office of Strategic Operations and Regulatory Affairs, Division of Regulations Development and Issuances, Attention: Dawn Willinghan, Room N2–14–26, 7500 Security Boulevard, Baltimore, Maryland 21244–1850.

Dated: October 17, 2002.

John P. Burke, III,

Paperwork Reduction Act Team Leader, CMS Reports Clearance Officer, Office of Strategic Operations and Strategic Affairs, Division of Regulations Development and Issuances.

[FR Doc. 02–27185 Filed 10–24–02; 8:45 am]

BILLING CODE 4120–03–P

DEPARTMENT OF HEALTH AND HUMAN SERVICES

Centers for Medicare and Medicaid Services

[Document Identifier: CMS–9042]

Agency Information Collection Activities: Submission for OMB Review; Comment Request

AGENCY: Centers for Medicare and Medicaid Services, HHS.

In compliance with the requirement of section 3506(c)(2)(A) of the Paperwork Reduction Act of 1995, the Centers for Medicare and Medicaid Services (CMS) (formerly known as the Health Care Financing Administration (HCFA), Department of Health and Human Services, is publishing the following summary of proposed collections for public comment. Interested persons are invited to send comments regarding this burden estimate or any other aspect of this collection of information, including any of the following subjects: (1) The necessity and utility of the proposed information collection for the proper performance of the agency's functions; (2) the accuracy of the estimated burden; (3) ways to enhance the quality, utility, and clarity of the information to be collected; and (4) the use of automated collection techniques or other forms of information technology to minimize the information collection burden.

Type of Information Collection Request: Extension of a currently approved collection; *Title of Information Collection:* Request for Accelerated Payments and Supporting Regulations in 42 CFR Sections 412.116, 412.632, 413.64, 413.350, and 484.245; *Form No.:* CMS–9042 (OMB#0938–0269); *Use:* These forms/instructions are used by fiscal intermediaries to access a provider's eligibility for accelerated payments. Such payment is granted if there is an unusual delay in processing bills. *Frequency:* On occasion; *Affected Public:* Business or other for-profit, and Not for-profit institutions; *Number of*

Respondents: 750; *Total Annual Responses:* 750; Total Annual Hours Requested: 375.

To obtain copies of the supporting statement and any related forms for the proposed paperwork collections referenced above, access CMS Web Site address at *http://www.hcfa.gov/regs/prdact95.htm*, or e-mail your request, including your address, phone number, OMB number, and CMS document identifier, to *Paperwork@hcfa.gov*, or call the Reports Clearance Office on (410) 786–1326. Written comments and recommendations for the proposed information collections must be mailed within 30 days of this notice directly to the OMB desk officer: OMB Human Resources and Housing Branch, Attention: Brenda Aguilar, New Executive Office Building, Room 10235, Washington, DC 20503.

Dated: October 17, 2002.

John P. Burke, III,

Paperwork Reduction Act Team Leader, CMS Reports Clearance Officer, Office of Strategic Operations and Regulatory Affairs, Division of Regulations Development and Issuances.

[FR Doc. 02–27186 Filed 10–24–02; 8:45 am]

BILLING CODE 4120–03–P

DEPARTMENT OF HEALTH AND HUMAN SERVICES

Centers for Medicare & Medicaid Services

CMS–2087–FN

RIN 0938–AK91

Medicaid Program; State Allotments for Payment of Medicare Part B Premiums for Qualifying Individuals: Federal Fiscal Year 2001

AGENCY: Centers for Medicare & Medicaid Services (CMS), HHS.

ACTION: Final Notice.

SUMMARY: The Social Security Act provides for the Medicaid program to pay all or part of the Medicare Part B premiums (for months during the period beginning with January 1998, and ending with December 2002) for two specific eligibility groups of low-income Medicare beneficiaries, referred to as Qualifying Individuals. This notice announces the allotments that are available for State agencies to pay Medicare Part B premiums for these eligibility groups for Federal fiscal year 2001.

DATES: The allotments are available for expenditures made during the Federal fiscal year 2001 (beginning October 1, 2000).

FOR FURTHER INFORMATION CONTACT: Robert Nakielny, (410) 786–4466.

SUPPLEMENTARY INFORMATION:

I. Background

A. Before the Balanced Budget Act of 1997

Before the enactment of the Balanced Budget Act of 1997 (BBA), section 1902(a)(10)(E) of the Social Security Act (the Act) specified that a Medicaid State plan must provide for Medicare cost-sharing for three eligibility groups of low-income Medicare beneficiaries. These three groups included Qualified Medicare Beneficiaries (QMBs), Specified Low-income Medicare Beneficiaries (SLMBs), and Qualified Disabled and Working Individuals (QDWIs).

A QMB is an individual entitled to Medicare Part A with income at or below the Federal poverty level and resources below $4,000 for an individual and $6,000 for a couple. An SLMB is an individual who meets the QMB criteria, except that his or her income is between a State-established level (at or below the Federal poverty level) and 120 percent of the Federal poverty level. A QDWI is an individual who is entitled to enroll in Medicare Part A, whose income does not exceed 200 percent of the Federal poverty level for a family of the size involved, whose resources do not exceed twice the amount allowed under the Supplementary Security Income (SSI) program, and who is not otherwise eligible for Medicaid.

The definition of Medicare cost-sharing at section 1905(p)(3) of the Act includes payment for premiums, although QDWIs only qualify to have Medicaid pay their Medicare Part A premiums.

B. After the Balanced Budget Act of 1997

Section 4732 of the BBA amended section 1902(a)(10)(E) of the Act to require States to provide for Medicaid payment of all or part of the Medicare Part B premiums, during the period beginning January 1998 and ending December 2002, for selected members of two eligibility groups of low-income Medicare beneficiaries, referred to as Qualifying Individuals (QIs).

Under section 1902(a)(10)(E)(iv)(I) of the Act, State agencies are required to pay the full amount of the Medicare Part B premium for selected QIs who would be QMBs except that their income level is at least 120 percent but less than 135 percent of the Federal poverty level for a family of the size involved. These individuals cannot otherwise be eligible for medical assistance under the approved State Medicaid plan.

The second group of QIs, under section 1902(a)(10)(E)(iv)(II) of the Act, includes Medicare beneficiaries who would be QMBs except that their income is at least 135 percent but less than 175 percent of the Federal poverty level for a family of the size involved. These QIs may not be otherwise eligible for Medicaid under the approved State plan, but are eligible for a portion of Medicare cost-sharing consisting only of a percentage of the increase in the Medicare Part B premium attributable to the shift of Medicare home health coverage from Part A to Part B (as provided in section 4611 of the BBA).

Section 4732(c) of the BBA also added section 1933 of the Act, which specifies the provisions for State coverage of the Medicare cost-sharing for additional low-income Medicare beneficiaries.

Section 1933(a) of the Act specifies that a State agency must provide, through a State plan amendment, for medical assistance to pay for the cost of Medicare cost-sharing on behalf of QIs who are selected to receive assistance.

Section 1933(b) of the Act sets forth the rules that State agencies must follow in selecting QIs and providing payment for Medicare Part B premiums. Specifically, the State agency must permit all QIs to apply for assistance and must select individuals on a first-come, first-served basis in the order in which they apply. Under section 1933(b)(2)(B) of the Act, when selecting persons who will receive assistance in calendar years after 1998, State agencies must give preference to those individuals who received assistance as QIs, QMBs, SLMBs, or QDWIs in the last month of the previous year and who continue to be, or become, QIs. Under section 1933(b)(4), persons selected to receive assistance in a calendar year are entitled to receive assistance for the remainder of the year, but not beyond, as long as they continue to qualify. The fact that an individual is selected to receive assistance at any time during the year does not entitle the individual to continued assistance for any succeeding year. Because the State's allotment is limited by law, section 1933(b)(3) of the Act provides that the State agency must limit the number of QIs so that the amount of assistance provided during the year is approximately equal to the State's allotment for that year.

Section 1933(c) of the Act limits the total amount of Federal funds available for payment of Part B premiums each fiscal year and specifies the formula to be used to determine an allotment for each State from this total amount. For State agencies that execute a State plan

amendment in accordance with section 1933(a) of the Act, a total of $1.5 billion was allocated over 5 years as follows: $200 million in FY 1998; $250 million in FY 1999; $300 million in FY 2000; $350 million in FY 2001; and $400 million in FY 2002.

The Federal matching rate for Medicaid payment of Medicare Part B premiums for QIs is 100 percent for expenditures up to the amount of the State's allotment. No Federal matching funds are available for expenditures in excess of the State's allotment amount. Administrative expenses associated with the payment of Medicare Part B premiums for QIs remain at the 50 percent matching level and may not be taken from the State's allotment.

The amount available for each fiscal year is to be allocated among States according to the formula set forth in section 1933(c)(2) of the Act. The formula provides for an amount to each State agency that is to be based on each State's share of the Secretary's estimate of the ratio of—

(1) An amount equal to the sum of the following:

(a) Twice the total number of individuals who meet all but the income requirements for QMBs, whose incomes are at least 120 percent but less than 135 percent of the Federal poverty level, and who are not otherwise eligible for Medicaid; and (b) The total number of individuals in the State who meet all but the income requirements for QMBs, whose incomes are at least 135 percent but less than 175 percent of the Federal poverty level, and who are not otherwise eligible for Medicaid; to

(2) The sum of all of these individuals under item (1) for all eligible States.

II. Provisions of This Notice

On January 25, 2002 (67 FR 3713), we published a proposed notice in the **Federal Register**. That notice contained the proposed allotments for Federal fiscal year 2001. We did not receive any public comments in response to that proposed notice.

Therefore, this notice announces the allotments available to individual States for Federal fiscal year 2001 for the Medicaid payment of Medicare Part B premiums for QIs identified under sections 1902(a)(10)(E)(iv)(I) and (II) of the Act. The formula used to calculate these allotments was described in detail in the January 26, 1998 **Federal Register** (63 FR 3752, 3754) and, except for the incorporation of the latest data, has been used here without changes.

FY 2001 STATE ALLOTMENTS FOR PAYMENT OF PART B PREMIUMS UNDER SEC. 4732 OF THE BBA OF 1997

[Dollars in thousands]

State	(a) M1 [1]	(b) M2 [2]	(c) 2 × (a) + (b)	State share of (c) (percent)	State FY 2001 allocation
AK	1	4	6	0.10	$340
AL	28	74	130	2.10	7,357
AR	21	46	88	1.42	4,980
AZ	21	66	108	1.75	6,112
CA	108	310	526	8.50	29,766
CO	10	27	47	0.76	2,660
CT	8	57	73	1.18	4,131
DC	2	5	9	0.15	509
DE	6	10	22	0.36	1,245
FL	113	282	508	8.21	28,747
GA	22	67	111	1.79	6,281
HI	4	14	22	0.36	1,245
IA	17	59	93	1.50	5,263
ID	6	19	31	0.50	1,754
IL	38	148	224	3.62	12,676
IN	41	80	162	2.62	9,167
KS	10	40	60	0.97	3,395
KY	20	65	105	1.70	5,942
LA	24	67	115	1.86	6,508
MA	34	79	147	2.38	8,319
MD	26	52	104	1.68	5,885
ME	7	16	30	0.49	1,698
MI	36	138	210	3.40	11,884
MN	23	46	92	1.49	5,206
MO	24	78	126	2.04	7,130
MS	15	44	74	1.20	4,188
MT	4	11	19	0.31	1,075
NC	46	111	203	3.28	11,487
ND	5	13	23	0.37	1,302
NE	10	34	54	0.87	3,056
NH	2	12	16	0.26	905
NJ	35	101	171	2.76	9,677
NM	7	25	39	0.63	2,207
NV	6	23	35	0.57	1,981
NY	94	236	424	6.86	23,994
OH	51	161	263	4.25	14,883
OK	23	61	107	1.73	6,055
OR	8	39	55	0.89	3,112
PA	81	195	357	5.77	20,202
RI	9	18	36	0.58	2,037
SC	28	61	117	1.89	6,621
SD	5	13	23	0.37	1,302
TN	36	58	130	2.10	7,357
TX	81	223	385	6.22	21,787
UT	7	18	32	0.52	1,811

FY 2001 STATE ALLOTMENTS FOR PAYMENT OF PART B PREMIUMS UNDER SEC. 4732 OF THE BBA OF 1997—Continued

[Dollars in thousands]

State	(a) M1 [1]	(b) M2 [2]	(c) 2 × (a) + (b)	State share of (c) (percent)	State FY 2001 allocation
VA	31	87	149	2.41	8,432
VT	3	8	14	0.23	792
WA	22	48	92	1.49	5,206
WI	21	95	137	2.22	7,753
WV	13	42	68	1.10	3,848
WY	3	7	13	0.21	736
Total	1296	3593	6185	100.00	350,000

[1] Three-year average (1998–2000) of number of Medicare beneficiaries in State who are not enrolled in Medicaid but whose incomes are at least 120% but less than 135% of FPL.

[2] Three-year average (1998–2000) of number of Medicare beneficiaries in State who are not enrolled in Medicaid but whose incomes are at least 135% but less than 175% of FPL.

IV. Regulatory Impact Statement

We have examined the impact of this notice as required by Executive Order 12866 (September 1993, Regulatory planning and review), the Regulatory Flexibility Act (RFA) (September 19, 1980, Pub. L. 96–354), section 1102(b) of the Act, the Unfunded Mandate Reform Act of 1995 (Pub. L. 104–4), and Executive Order 13132.

Executive Order 12866 directs agencies to assess all costs and benefits of available regulatory alternatives and, when regulation is necessary, to select regulatory approaches that maximize net benefits (including potential economic, environmental, public health and safety effects; distributive impacts; and equity). A regulatory impact statement (RIA) must be prepared for major rules with economic effects of $100 million or more annually. Although we have determined this is a major rule, since it provides $400 million to a specialized category of low-income Medicare beneficiaries, these funds have already been budgeted and will not cause an adverse ill effect on the economy. Therefore, we will not provide an impact analysis under Executive Order 12866.

The RFA requires agencies to analyze options for regulatory relief for small entities. For purposes of the RFA, States and individuals are not considered to be small entities.

This notice allocates, among the States, Federal funds to provide Medicaid payment for Medicare Part B premiums for QIs. The total amount of Federal funds available during a Federal fiscal year and the formula for determining individual State allotments are specified in the law. Because the formula for determination of State allotments is specified in the statute, there were no other options to be considered. Therefore, we have applied the statutory formula for the State allotments except for the use of specified data. Because the data specified in the law were not available, we have used comparable data from the U.S. Census Bureau on the number of possible QIs in the States, as described in detail in the January 26, 1998 **Federal Register**. These new allotments for FY 2002 incorporate the latest data from the U.S. Census Bureau from 1998–2000, as specified in the footnotes to the preceding table. Since the statutory formula calls for an estimate of individuals who could qualify for QI status, rather than the number of individuals who actually have that status, the exact numbers of those individuals will always be uncertain.

We believe the statutory provisions that are implemented in this final notice will have a positive effect on States and individuals. Federal funding at the 100 percent matching rate is available for Medicare cost-sharing for Medicare Part B premium payments for selected QIs, and a greater number of low-income Medicare beneficiaries will have their Medicare Part B premiums paid under Medicaid.

Section 1102(b) of the Act requires us to prepare a regulatory impact analysis for any notice that may have a significant impact on the operations of a substantial number of small rural hospitals. Such an analysis must conform to the provisions of section 604 of the RFA. For purposes of section 1102(b) of the Act, we define a small rural hospital as a hospital that is located outside a Metropolitan Statistical Area and has fewer than 100 beds.

We are not preparing analyses for either the RFA or section 1102(b) of the Act, because we have determined and certify that this final notice will not have a significant economic impact on a substantial number of small entities or a significant impact on the operations of a substantial number of small rural hospitals.

Section 202 of the Unfunded Mandate Reform Act of 1995, Pub. L. 104–4, also requires that agencies assess anticipated costs and benefits before issuing any proposed rule and a final rule preceded by a proposed rule that may result in an expenditure in any one year by State, local, or tribal governments, in the aggregate, or any the private sector, or $110 million or more. This notice will have no consequential effect on the governments mentioned or on the private sector.

We have reviewed this notice under the threshold criteria of Executive Order 13132, Federalism. Because this notice simply provides notice of funding ceilings, as determined under the statute, we have determined that this notice does not significantly affect the rights, roles, and responsibilities of States.

In accordance with the provisions of Executive Order 12866, this notice was reviewed by the Office of Management and Budget (OMB).

(Catalog of Federal Domestic Assistance Program No. 93.778, Medical Assistance Program)

Dated: May 28, 2002.

Thomas A. Scully,

Administrator, Centers for Medicare & Medicaid Services.

[FR Doc. 02–27143 Filed 10–24–02; 8:45 am]

BILLING CODE 4120–01–P

DEPARTMENT OF HEALTH AND HUMAN SERVICES

Centers for Medicare & Medicaid Services

[CMS–2159–N]

RIN 0938–ZA34

Medicare, Medicaid, and CLIA Programs; Clinical Laboratory Improvement Amendments of 1988 Continuance of Approval of the Joint Commission on Accreditation of Healthcare Organizations (JCAHO) as an Accrediting Organization

AGENCY: Centers for Medicare & Medicaid Services (CMS), HHS.

ACTION: Notice.

SUMMARY: This notice announces the continued approval of the Joint Commission on Accreditation of Healthcare Organizations (JCAHO) as an accreditation organization for clinical laboratories under the Clinical Laboratory Improvement Amendments of 1988 (CLIA) program. We have determined that the accreditation process of this organization provides reasonable assurance that the laboratories accredited by JCAHO meet the conditions required by the CLIA statute and its implementing regulations. Consequently, laboratories that voluntarily become accredited by JCAHO, in lieu of direct Federal oversight, and continue to meet JCAHO requirements would meet the CLIA condition level requirements for laboratories and, therefore, are not subject to routine inspection by State survey agencies to determine their compliance with CLIA requirements. These laboratories are, however, subject to Federal validation and complaint investigation surveys.

EFFECTIVE DATE: This notice is effective for the period October 25, 2002, through October 25, 2005.

FOR FURTHER INFORMATION CONTACT: Kathleen Todd, (410) 786–3385.

SUPPLEMENTARY INFORMATION:

I. Background and Legislative Authority

On October 31, 1988, the Congress enacted the Clinical Laboratory Improvement Amendments of 1988 (CLIA), Pub. L. 100–578. CLIA replaced in its entirety section 353(e)(2) of the Public Health Service Act, as enacted by the Clinical Laboratories Improvement Act of 1967. On July 31, 1992, we published a final rule in the **Federal Register** (57 FR 33992) implementing the accreditation provisions of CLIA. Under this rule, we may approve a private, nonprofit organization as an approved accreditation organization to accredit clinical laboratories under the CLIA program if the organization meets certain requirements. An organization's requirements for accrediting a laboratory must be equal to, or more stringent than, the applicable CLIA program requirements in 42 CFR part 493 (Laboratory Requirements). Therefore, a laboratory accredited by an approved accreditation organization that meets and continues to meet all of the accreditation organization's requirements would be considered to meet CLIA condition level requirements if it were inspected against CLIA regulations. The regulations in 42 CFR part 493, subpart E (Accreditation by a Private, Nonprofit Accreditation Organization or Exemption Under an Approved State Laboratory Program) specify the requirements an accreditation organization must meet to be an approved accreditation organization. We approve an accreditation organization for a period not to exceed 6 years.

In general, the approved accreditation organization must, among other conditions and requirements, meet the following conditions:

- Use inspectors qualified to evaluate laboratory performance and agree to inspect laboratories with the frequency determined by us.
- Apply standards and criteria that are equal to, or more stringent than, those condition level requirements established by us when taken as a whole.
- Provide reasonable assurance that these standards and criteria are continuously met by its accredited laboratories.
- Provide us with the name of any laboratory that has had its accreditation denied, suspended, withdrawn, limited, or revoked within 30 days of the action taken.
- Notify us at least 30 days before implementing any proposed changes in its standards.
- If we withdraw our approval, we will notify the accredited laboratory of the withdrawal within 10 days of the withdrawal. A laboratory can be accredited if, among other conditions and requirements, it meets the standards of an approved accreditation organization and authorizes the accreditation organization to submit records and other information to us as required.

In addition to requiring the publication of criteria for approving an accreditation organization and withdrawing this approval, CLIA regulations require us to perform an annual evaluation by inspecting a sufficient number of laboratories accredited by an approved accreditation organization, as well as by any other means that we determine appropriate.

II. Notice of Continued Approval of the Joint Commission on Accreditation of Healthcare Organizations as an Accreditation Organization

In this notice, we approve JCAHO as an organization that may continue to accredit laboratories for purposes of establishing their compliance with CLIA. The Centers for Disease Control and Prevention (CDC) and CMS have examined the JCAHO application and all subsequent submissions to determine equivalency with the requirements under 42 CFR part 493, subpart E that an accreditation organization must meet to be granted approved status under CLIA. We have determined that JCAHO complied with the applicable CLIA requirements and grant JCAHO approval as an accreditation organization under 42 CFR part 493, subpart E, as of October 25, 2002, through October 25, 2005, for all specialty and subspecialty areas under CLIA.

As a result of this determination, any laboratory that is accredited by JCAHO during this time period for an approved specialty or subspecialty is deemed to meet the applicable CLIA condition level requirements for the laboratories found in 42 CFR part 493 and, therefore, is not subject to routine inspection by a State survey agency to determine its compliance with CLIA requirements. The accredited laboratory, however, is subject to validation and complaint investigation surveys performed by us, or by any other Federal, State, or local public agency, or nonprofit organization under an agreement with the Secretary.

III. Evaluation of Joint Commission on Accreditation of Healthcare Organizations

The following describes the process used to determine that JCAHO, as a private, nonprofit organization, provides reasonable assurance that laboratories it accredits will meet the applicable requirements of CLIA.

A. Requirements for Approving an Accreditation Organization Under Clinical Laboratory Improvement Amendments of 1988

To determine whether we should grant approved status to JCAHO as a private, nonprofit organization for accrediting laboratories under CLIA for all specialty or subspecialty areas of human specimen testing it requested, we conducted a detailed and in-depth comparison of JCAHO's requirements

for its laboratories to those of CLIA. In summary, we evaluated whether JCAHO meets the following requirements:

• Provides reasonable assurance to us that it requires the laboratories it accredits to meet requirements that are equal to, or more stringent than, the CLIA condition level requirements (for the requested specialties and subspecialties) and would, therefore, meet the condition level requirements of CLIA if those laboratories had not been granted deemed status and had been inspected against condition level requirements.

• Meets the applicable requirements of 42 CFR part 493, subpart E.

As specified in the regulations of 42 CFR part 493, subpart E, the review of a private, nonprofit accreditation organization seeking approved status under CLIA includes, but is not limited to, an evaluation of the following:

• Whether the organization's requirements for its accredited laboratories are equal to, or more stringent than, the condition level requirements of the CLIA regulations.

• The organization's inspection process to determine the following:

—The composition of the inspection teams, qualifications of the inspectors, and the ability of the organization to provide continuing education and training to all of its inspectors.

—The comparability of the organization's full inspection and complaint inspection requirements to the Federal requirements including, but not limited to, inspection frequency, and the ability to investigate and respond to complaints against its accredited laboratories.

—The organization's procedures for monitoring laboratories that it finds out of compliance with its requirements.

—The ability of the organization to provide us with electronic data and reports that are necessary for effective validation and assessment of the organization's inspection process.

—The ability of the organization to provide us with electronic data related to the adverse actions resulting from unsuccessful proficiency testing (PT) participation in CMS-approved PT programs, as well as data related to the PT failures, within 30 days of the initiation of the action.

—The ability of the organization to provide us with electronic data for all its accredited laboratories and the area of specialty and subspecialty testing.

—The adequacy of the numbers of staff and other resources.

—The organization's ability to provide adequate funding for performing the required inspections.

• Whether the organization has an agreement with us that requires it, among other conditions and requirements, to meet the following:

—Notify us of any laboratory that has had its accreditation denied, limited, suspended, withdrawn, or revoked by the accreditation organization, or that has had any other adverse action taken against it by the accreditation organization, within 30 days of the date the action is taken.

—Notify us within 10 days of a deficiency identified in an accredited laboratory if the deficiency poses an immediate jeopardy to the laboratory's patients or a hazard to the general public.

—Notify us of all newly accredited laboratories, or laboratories whose areas of specialty or subspecialty are revised, within 30 days.

—Notify each laboratory accredited by the organization within 10 days of our withdrawal of approval of the organization as an accreditation organization.

—Provide us with inspection schedules, on request, for the purpose of conducting onsite validation inspections.

—Provide our agent, the State survey agency, or us with any facility-specific data that includes, but is not limited to, PT results that constitute unsuccessful participation in an approved PT program and notification of the adverse actions or corrective actions imposed by the accreditation organization as a result of unsuccessful PT participation.

—Provide us with written notification at least 30 days in advance of the effective date of any proposed changes in its requirements.

—Provide upon the request by any person, on a reasonable basis (under State confidentiality and disclosure requirements, if applicable), any laboratory's PT results with the explanatory information needed to assist in the interpretation of the results.

Laboratories that are accredited by an approved accreditation organization must, among other conditions and requirements, meet the following requirements:

• Authorize the organization to release to us all records and information required.

• Permit inspections as required by the CLIA regulations at 42 CFR part 493, subpart Q (Inspection).

• Obtain a certificate of accreditation under § 493.55 (Application for registration certificate and certificate of accreditation).

B. Evaluation of the Joint Commission on Accreditation of Healthcare Organizations Request for Continued Approval as an Accreditation Organization Under the Clinical Laboratory Improvement Amendments of 1988

We have examined JCAHO's assurance that it requires the laboratories it accredits to be, and that the organization is in compliance with, the following subparts of part 493:

1. Subpart E—Accreditation by a Private, Nonprofit Accreditation Organization or Exemption Under an Approved State Laboratory Program

JCAHO has requested continued approval to accredit all specialties and subspecialties and has submitted the following:

• Description of its PT monitoring process, inspection process, policies, and data management and analysis system.

• List of its inspection team size, composition, and education and experience.

• Investigative and complaint response procedures.

• Our notification agreements.

• Procedures for the removal or withdrawal of accreditation from a laboratory.

• Current list of accredited laboratories with an announced or unannounced inspection process.

We have determined that JCAHO has complied with the requirements under CLIA for approval as an accreditation organization under this subpart.

Our evaluation identified JCAHO requirements pertaining to waived testing that are more stringent than the CLIA requirements. The JCAHO waived testing requirements include the following:

• Defining the extent that waived test results are used in patient care.

• Identifying the personnel responsible for performing and supervising waived testing.

• Assuring that personnel performing waived testing have adequate, specific training and orientation to perform the testing and can demonstrate satisfactory levels of performance.

• Making certain that policies and procedures governing waived testing-related processes are current and readily available.

• Conducting defined quality control checks.

• Maintaining quality control and test records.

The CLIA requirements at § 493.15 only require that a laboratory follow

manufacturer's instructions and obtain a certificate of waiver.

2. Subpart H—Participation in Proficiency Testing for Laboratories Performing Tests of Moderate or High Complexity, or Both

JCAHO's requirements for PT are equivalent to those of CLIA.

3. Subpart J—Patient Test Management for Moderate or High Complexity Testing, or Both

JCAHO's requirements in Patient Test Management are equivalent to those of CLIA.

4. Subpart K—Quality Control for Tests of Moderate or High Complexity, or Both

The quality control (QC) requirements of JCAHO have been evaluated against the applicable requirements of CLIA and its implementing regulations. We have determined that JCAHO's requirements, when taken as a whole, are more stringent than the CLIA requirements. The specific areas that are more stringent are the following:

- Requirements that laboratories must meet JCAHO's QC requirements for all waived testing performed.
- A requirement for mycobacteriology that laboratories perform daily QC of flourochrome acid-fast stains.
- Specific requirements for embryo laboratories that include standards for cryopreservation of specimens, embryo transfer procedures, and QC of the culture media used.
- Requirements for autopsy pathology that include appropriate refrigeration for cadaver storage when a delay occurs in performing an autopsy and requiring that provisional anatomic diagnoses are recorded in the clinical record within 3 days after the autopsy is performed.

5. Subpart M—Personnel for Moderate and High Complexity Testing

We have found that JCAHO's personnel requirements, when taken as a whole, are equal to the CLIA requirements.

6. Subpart P—Quality Assurance for Moderate or High Complexity Testing or Both

We have determined that JCAHO's requirements are equal to the CLIA requirements of this subpart.

7. Subpart Q—Inspections

JCAHO will continue to perform on-site inspections on a biennial basis. Therefore, we have determined that JCAHO's inspections are equivalent to CLIA.

8. Subpart R—Enforcement Procedures for Laboratories

JCAHO meets the requirements of subpart R to the extent that it applies to accreditation organizations. JCAHO policy stipulates the action it takes when laboratories it accredits do not comply with its requirements. JCAHO will deny, revoke, or limit accreditation of a laboratory as appropriate and report the action to us within 30 days. JCAHO also provides an appeal process for laboratories that have had accreditation denied, revoked, suspended, or limited.

We have determined that JCAHO's laboratory enforcement and appeal policies are equivalent to the requirements of this subpart as they apply to accreditation organizations.

IV. Federal Validation Inspections and Continuing Oversight

The Federal validation inspections of JCAHO accredited laboratories may be conducted on a representative sample basis or in response to substantial allegations of noncompliance (complaint inspections). The outcome of those validation inspections, performed by our agent, or the State survey agency, or us, will be our principal means for verifying that the laboratories accredited by JCAHO remain in compliance with CLIA requirements. This Federal monitoring is an ongoing process.

V. Removal of Approval as an Accrediting Organization

Our regulations provide, in part, that we may remove the approval of an accreditation organization, such as that of JCAHO, for cause, before the end of the effective date of approval. If validation inspection outcomes and the comparability or validation review produce findings as described in § 493.573 (Continuing Federal oversight of private nonprofit accreditation organizations and approved State licensure programs), we will conduct a review of an approved accreditation organization's program. In addition, we will conduct a review, when the validation review findings, irrespective of the rate of disparity (as defined in § 493.2), indicate widespread or systemic problems in the organization's accreditation processes that provide evidence that the organization's requirements, taken as a whole, are no longer equivalent to the CLIA requirements, taken as a whole. If validation inspection results over a 1-year period indicate a rate of disparity of 20 percent or more between the findings of the organization and those of CMS, we will conduct a review under § 493.575(a)(4).

If we determine that JCAHO has failed to adopt or maintain requirements that are equal to or more stringent than the CLIA requirements, or systematic problems exist in its inspection process, a probationary period as determined by us, not to exceed 1 year, may be given to JCAHO to adopt equal or more stringent requirements. We will make a final determination as to whether or not JCAHO retains its approved status as an accreditation organization under CLIA.

If approved status is withdrawn, an accreditation organization such as JCAHO may resubmit its application if it revises its program to address the rationale for the denial, demonstrates that it can reasonably assure that its accredited laboratories meet CLIA condition level requirements, and resubmits its application for approval as an accreditation organization in its entirety. However, if an approved accreditation organization requests reconsideration of an adverse determination in accordance with subpart D (Reconsideration of Adverse Determinations—Deeming Authority for Accreditation Organizations and CLIA Exemption of Laboratories Under State Programs) of part 488 (Survey, Certification, and Enforcement Procedures) of our regulations, it may not submit a new application until we issue a final reconsideration determination.

Should circumstances result in JCAHO having its approval withdrawn, we will publish a notice in the **Federal Register** explaining the basis for removing its approval.

VI. Regulatory Impact Statement

We have examined the impacts of this notice as required by Executive Order 12866 (September 1993, Regulatory Planning and Review), the Regulatory Flexibility Act (RFA) (September 16, 1980, Pub. L. 96–354), section 1102(b) of the Social Security Act, the Unfunded Mandates Reform Act of 1995 (Pub. L. 104–4), and Executive Order 13132.

Executive Order 12866 directs agencies to assess all costs and benefits of available regulatory alternatives and, if regulation is necessary, to select regulatory approaches that maximize net benefits (including potential economic, environmental, public health and safety effects, distributive impacts, and equity). A regulatory impact analysis (RIA) must be prepared for major rules with economically significant effects ($100 million or more in any 1 year). Since this notice announces the continued approval of JCAHO as an accreditation organization for clinical laboratories under the CLIA program and has no economic impact

on the Medicare, Medicaid, and CLIA programs, we have determined this requirement does not apply to this notice.

The RFA requires agencies to analyze options for regulatory relief of small businesses. For purposes of the RFA, small entities include small businesses, nonprofit organizations, and government agencies. Most hospitals and most other providers and suppliers are small entities, either by nonprofit status or by having revenues of $6 to $29 million in any 1 year. For purposes of the RFA, JCAHO, a private, nonprofit organization, is considered to be a small entity. Individuals and States are not included in the definition of a small entity.

In addition, section 1102(b) of the Act requires us to prepare a regulatory impact analysis if a rule may have a significant impact on the operations of a substantial number of small rural hospitals. This analysis must conform to the provisions of section 604 of the RFA. For purposes of section 1102(b) of the Act, we define a small rural hospital as a hospital that is located outside of a Metropolitan Statistical Area and has fewer than 100 beds.

Section 202 of the Unfunded Mandates Reform Act of 1995 also requires that agencies assess anticipated costs and benefits before issuing any rule that may result in expenditure in any 1 year by State, local, or tribal governments, in the aggregate, or by the private sector, of $110 million. We have determined that this notice will not have a consequential effect on the governments mentioned or on the private sector.

Executive Order 13132 establishes certain requirements that an agency must meet when it promulgates a proposed rule (and subsequent final rule) that imposes substantial direct requirement costs on State and local governments, preempts State law, or otherwise has Federalism implications. We have determined that this notice will not have a substantial effect on State or local governments.

We are not preparing analyses for either the RFA or section 1102(b) of the Act because we have determined, and we certify, that this notice will not have a significant economic impact on a substantial number of small entities or a significant impact on the operations of a substantial number of small rural hospitals.

In accordance with the provisions of Executive Order 12866, this notice was reviewed by the Office of Management and Budget.

Authority: Section 353 of the Public Health Service Act (42 U.S.C. 263a).

Dated: June 14, 2002.

Thomas A. Scully,

Administrator, Centers for Medicare & Medicaid Services.

[FR Doc. 02–25947 Filed 10–24–02; 8:45 am]

BILLING CODE 4120–01–P

DEPARTMENT OF HEALTH AND HUMAN SERVICES

Centers for Medicare & Medicaid Services

[CMS–4038–N]

Medicare Program: Meeting of the Advisory Panel on Medicare Education—November 19, 2002

AGENCY: Centers for Medicare & Medicaid Services (CMS), HHS.

ACTION: Notice of meeting.

SUMMARY: In accordance with the Federal Advisory Committee Act, 5 U.S.C. Appendix 2, section 10(a) (Pub. L. 92–463), this notice announces a meeting of the Advisory Panel on Medicare Education (the Panel) on November 19, 2002. The Panel advises and makes recommendations to the Secretary of the Department of Health and Human Services (HHS) and the Administrator of the Centers for Medicare & Medicaid Services (CMS) on opportunities to enhance the effectiveness of consumer education strategies concerning the Medicare program. This meeting is open to the public.

DATES: The meeting is scheduled for November 19, 2002, from 9 a.m. to 4 p.m., e.d.s.t. *Deadline for Presentations and Comments:* November 12, 2002, 12 noon, e.d.s.t.

ADDRESSES: The meeting will be held at the Holiday Inn on the Hill, 415 New Jersey Avenue, NW., Washington, DC, 20001, (202) 638–1616.

FOR FURTHER INFORMATION CONTACT: Nancy Caliman, Health Insurance Specialist, Division of Partnership Development, Center for Beneficiary Choices, Centers for Medicare & Medicaid Services, 7500 Security Boulevard, S2–23–05, Baltimore, MD, 21244–1850, (410) 786–5052. Please refer to the CMS Advisory Committees Information Line (1–877–449–5659 toll free)/(410–786–9379 local) or the Internet (*http://www.cms.hhs.gov/faca/apme/default.asp*) for additional information and updates on committee activities, or contact Ms. Caliman via e-mail at *ncaliman@cms.hhs.gov.* Press inquiries are handled through the CMS Press Office at (202) 690–6145.

SUPPLEMENTARY INFORMATION: Section 222 of the Public Health Service Act (42 U.S.C. 217a), as amended, grants to the Secretary the authority to establish an advisory panel if the Secretary finds the panel necessary and in the public interest. The Secretary signed the charter establishing the Advisory Panel on Medicare Education (the Panel) on January 21, 1999 (64 FR 7849) and approved the renewal of the charter on January 18, 2001. The Panel advises and makes recommendations to the Secretary and the Administrator of the Centers for Medicare & Medicaid Services on opportunities to enhance the effectiveness of consumer education strategies concerning the Medicare program.

The goals of the Panel are as follows:

- To develop and implement a national Medicare education program that describes the options for selecting a health plan under Medicare.
- To enhance the Federal government's effectiveness in informing the Medicare consumer, including the appropriate use of public-private partnerships.
- To expand outreach to vulnerable and underserved communities, including racial and ethnic minorities, in the context of a national Medicare education program.
- To assemble an information base of best practices for helping consumers evaluate health plan options and build a community infrastructure for information, counseling, and assistance.

The current members of the Panel are: Dr. Jane Delgado, Chief Executive Officer, National Alliance for Hispanic Health; Joyce Dubow, Senior Policy Advisor, Public Policy Institute, AARP; Timothy Fuller, Executive Director, National Gray Panthers; John Graham IV, Chief Executive Officer, American Diabetes Association; Dr. William Haggett, Senior Vice President, Government Programs, Independence Blue Cross; Thomas Hall, Chairman and Chief Executive Officer, Cardio-Kinetics, Inc.; David Knutson, Director, Health System Studies, Park Nicollet Institute for Research and Education; Brian Lindberg, Executive Director, Consumer Coalition for Quality Health Care; Katherine Metzger, Director, Medicare and Medicaid Programs, Fallon Community Health Plan; Dr. Laurie Powers, Co-Director, Center on Self-Determination, Oregon Health Sciences University; Dr. Marlon Priest, Professor of Emergency Medicine, University of Alabama at Birmingham; Dr. Susan Reinhard, Co-Director, Center for State Health Policy, Rutgers University and Chairperson of the Advisory Panel on Medicare Education; Dr. Everard

Rutledge, Vice President of Community Health, Bon Secours Health Systems, Inc.; Jay Sackman, Executive Vice President, 1199 Service Employees International Union; Dallas Salisbury, President and Chief Executive Officer, Employee Benefit Research Institute; Rosemarie Sweeney, Vice President, Socioeconomic Affairs and Policy Analysis, American Academy of Family Physicians; and Bruce Taylor, Director, Employee Benefit Policy and Plans, Verizon Communications.

The agenda for the November 19, 2002 meeting will include the following:

- Recap of the previous (September 26, 2002) meeting.
- *Medicare & You* Campaign Update.
- Strategies and Approaches for Medicare Education.
- Listening Session with CMS Leadership.
- Public Comment.

Individuals or organizations that wish to make a 5-minute oral presentation on an agenda topic should contact Ms. Caliman by 12 noon, November 12, 2002. A written copy of the oral presentation should also be submitted to Ms. Caliman by 12 noon, November 12, 2002. The number of oral presentations may be limited by the time available. Individuals not wishing to make a presentation may submit written comments to Ms. Caliman by 12 noon, November 12, 2002. The meeting is open to the public, but attendance is limited to the space available. Individuals requiring sign language interpretation for the hearing impaired or other special accommodations should contact Ms. Caliman at least 15 days before the meeting.

Authority: Sec. 222 of the Public Health Service Act (42 U.S.C. 217(a) and sec. 10(a) of Pub. L. 92–463 (5 U.S.C. App. 2, sec. 10(a) and 41 CFR 102–3).

(Catalog of Federal Domestic Assistance Program No. 93.773, Medicare—Hospital Insurance Program; and Program No. 93.774, Medicare—Supplementary Medical Insurance Program)

October 10, 2002.

Thomas A. Scully,

Administrator, Centers for Medicare & Medicaid Services.

[FR Doc. 02–26673 Filed 10–24–02; 8:45 am]

BILLING CODE 4120–01–P

DEPARTMENT OF HEALTH AND HUMAN SERVICES

Centers for Medicare & Medicaid Services

Statement of Organization, Functions, and Delegations of Authority

Part F of the Statement of Organization, Functions, and Delegations of Authority for the Department of Health and Human Services, Centers for Medicare & Medicaid Services (CMS), (Federal Registers, Vol. 64, No. 249, p. 73057; Vol. 67, No. 81, p. 20804; and Vol. 66, No. 177, p. 47498 dated September 12, 2001) is amended to reflect changes to the Center for Beneficiary Choices and the Office of Research, Development and Information.

The specific amendments to part F are described below:

- Section F.10. (Organization) is amended to read as follows:

1. Public Affairs Office (FAC)
2. Center for Beneficiary Choices (FAE)
3. Office of Legislation (FAF)
4. Center for Medicare Management (FAH)
5. Office of Equal Opportunity and Civil Rights (FAJ)
6. Office of Research, Demonstration, and Information (FAK)
7. Office of Clinical Standards and Quality (FAM)
8. Office of the Actuary (FAN)
9. Center for Medicaid and State Operations (FAS)
10. Northeastern Consortium (FAU)
11. Southern Consortium (FAV)
12. Midwestern Consortium (FAW)
13. Western Consortium (FAX)
14. Office of Operations Management (FAY)
15. Office of Internal Customer Support (FBA)
16. Office of Information Services (FBB)
17. Office of Financial Management (FBC)

- Section F.20. (Functions) is amended by deleting the functional statement in its entirety for the Center for Beneficiary Choices. The new functional statement reads as follows:

2. Center for Beneficiary Choices (FAE)

- Serves as the focal point for all Agency interactions with beneficiaries, their families, care givers, health care providers, and others operating on their behalf concerning improving beneficiary ability to make informed decisions about their health and about program benefits administered by the Agency. These activities include strategic and implementation planning, execution, assessment and communications.
- Assesses beneficiary and other consumer needs, develops and oversees activities targeted to meet these needs, and documents and disseminates results of these activities. These activities focus on Agency beneficiary service goals and objectives and include: development of baseline and ongoing monitoring information concerning populations affected by Agency programs; development of performance measures and assessment programs; design and implementation of beneficiary services initiatives; development of communications channels and feedback mechanisms within the Agency and between the Agency and its beneficiaries and their representatives; and close collaboration with other Federal and State agencies and other stakeholders with a shared interest in better serving our beneficiaries.
- Develops national policy for all Medicare Parts A, B, and C beneficiary eligibility, enrollment, entitlement; premium billing and collection; coordination of benefits; rights and protections; dispute resolution process; as well as policy for managed care enrollment and disenrollment to assure the effective administration of the Medicare program, including the development of related legislative proposals.
- Oversees the development of privacy and confidentiality policies pertaining to the collection, use, and release to individually identifiable data.
- Coordinates beneficiary-centered information, education, and service initiatives.
- Develops and tests new and innovative methods to improve beneficiary aspects of health care delivery systems through Title XVIII, XIX, and XXI demonstrations and other creative approaches to meeting the needs of Agency beneficiaries.
- Assures, in coordination with other Centers and Offices, the activities of Medicare contractors, including managed care plans, agents, and State Agencies meet the Agency's requirements on matters concerning beneficiaries and other consumers.
- Plans and administers the contracts and grants related to beneficiary and customer service, including the State Health Insurance Assistance Program grants.
- Formulates strategies to advance overall beneficiary communications goals and coordinates the design and publication process for all beneficiary-centered information, education, and service initiatives.
- Builds a range of partnerships with other national organizations for effective consumer outreach, awareness, and

education efforts in support of Agency programs.

• Serves as the focal point for all Agency interactions with managed health care organizations for issues relating to Agency programs' policy and operations.

• Develops national policies and procedures related to the development, qualification and compliance of health maintenance organizations, competitive medical plans and other health care delivery systems and purchasing arrangements (such as prospective pay, case management, differential payment, selective contracting, *etc.*) necessary to assure the effective administration of the Agency's programs, including the development of statutory proposals.

• Handles all phases of contracts with managed health care organizations eligible to provide care to Medicare beneficiaries.

• Coordinates the administration of individual benefits to assure appropriate focus on long term care, where applicable, and assumes responsibility for the operational efforts related to the payment aspects of long term care and post-acute care services.

6. Office of Research, Development and Information

• Provides analytic support and information to the Administrator and the Executive Council needed to establish Agency goals and directions.

• Performs environmental scanning, identifying, evaluating, and reporting emerging trends in health care delivery and financing and their interactions with Agency programs.

• Manages strategic, crosscutting initiatives.

• Designs and conducts research and evaluations of health care programs, studying their impacts on beneficiaries, providers, plans, States and other partners and customers, designing and assessing potential improvements, and developing new measurement tools.

• Coordinates all Agency demonstration activities, including development of the research and demonstration annual plan, evaluation of all Agency demonstrations, and assistance to other components in the design of demonstrations and studies.

• Manages assigned demonstrations, including Federal review, approval, and oversight; coordinates and participates with departmental components in experimental health care delivery projects.

• Develops research, demonstration, and other publications and papers related to health care issues.

• Serves as a contact in CMS for international visitors. Responds to requests from intergovernmental agencies and the international community for information related to the United States health care system.

• Designs and conducts payment, purchasing, and benefits demonstrations.

Dated: Ocotber 16, 2002.

Ruben J. King-Shaw, Jr.,

Deputy Administrator and Chief Operating Officer, Centers for Medicare & Medicaid Services.

[FR Doc. 02–27194 Filed 10–24–02; 8:45 am]

BILLING CODE 4120–01–P

DEPARTMENT OF HEALTH AND HUMAN SERVICES

National Institutes of Health/National Institute of Environmental Health Sciences

Proposed Collection; Comment Request; Environmental Factors in the Development of Polycystic Ovary Syndrome

SUMMARY: In compliance with the requirement of Section 3506(c)(2)(A) of the Paperwork Reduction Act of 1995, for opportunity for public comment on proposed data collection projects, the National Institute of Environmental Health Sciences (NIEHS), the National Institutes of Health (NIH) will publish periodic summaries of proposed projects to be submitted to the Office of Management and Budget (OMB) for review and approval.

Proposed Collection: Title: Environmental Factors in the Development of Polycystic Ovary Syndrome. *Type of Information Collection Request:* Revision of OMB No. 0925–0483 and expiration date 2/28/2003. *Need and Use of Information Collection:* The purpose of this study is to identify a cohort of living female twin pairs in which at least one member is likely to have Polycystic Ovary Syndrome (PCOS) for future study. Potential participants (~3,700) will come from the Mid-Atlantic Twin Registry (MATR) and were chosen based on their answers to several questions (in a preliminary MATR survey) concerning irregular periods and a history of polycystic cystic ovaries. The instrument to be used here will be administered by telephone by professional interviewers at the MATR. It contains 15 simple and direct questions and will take about 10 minutes to complete. Its contents deal with the frequency of menstrual periods, a history of polycystic ovaries, obesity, excess facial hair and other evidence of hyperandrogenism. Since this is such a short telephone survey, participants will receive no prior notification. Informed consent will be asked for verbally over the phone at the time of the interview. All participants will be asked about their willingness to participate in future studies if their answers meet certain criteria. The major objectives of future studies using this cohort are to determine more reliable concordance rates for PCOS in monozygotic and dizygotic twins, establish baseline heritability estimates, and develop hypotheses concerning possible pathogenetic and/or environmental factors. The findings from this study will aid in developing: (1) genetic tests to identify high risk women; (2) preventative strategies; and (3) more effective therapies for PCOS and related syndromes such as type 2 diabetes, obesity, idiopathic hyperanrogenism, and male pattern baldness. *Frequency of Response:* One time. *Affected Public:* Individuals or households. *Type of Respondents:* Adult women. The annual reporting burden is as follows: *Estimated Number of Respondents:* 3,700 *Estimated Number of Responses per Respondent:* 1; *Average Burden Hours Per Response:* 0.167; and *Estimated Total Annual Burden Hours Requested:* 206 per year for 3 years. The annualized cost to respondents is estimated at $6,179.00. There are no Capital Costs to report. There are no Operating or Maintenance Costs to report.

Request for Comments: Written comments and/or suggestions from the public and affected agencies are invited on one or more of the following points: (1) Whether the proposed collection of information is necessary for the proper performance of the function of the agency, including whether the information will have practical utility; (2) The accuracy of the agency's estimate of the burden of the proposed collection of information, including the validity of the methodology and assumptions used; (3) Ways to enhance the quality, utility, and clarity of the information to be collected; and (4) Ways to minimize the burden of the collection of information on those who are to respond, including the use of appropriate automated electronic, mechanical, or other technological collection techniques or other forms of information technology.

For Further Information Contact: To request more information on the proposed project or to obtain a copy of the data collection plans and instruments, contact Dr. Patricia C. Chulada, Clinical Research Scientist, Clinical Research Office, NIEHS, PO Box 12233, Research Triangle Park, NC 27709 or call non-toll-free number (919)

541–7736 or e-mail your request, including your address to: *''chulada@niehs.nih.gov''.*

Comments Due Date: Comments regarding this information collection are best assured of having their full effect if received within 60-days of the date of this publication.

Dated: October 11, 2002.

Francine Little,

Associate Director for Management.

[FR Doc. 02–27187 Filed 10–24–02; 8:45 am]

BILLING CODE 4140–01–M

DEPARTMENT OF HEALTH AND HUMAN SERVICES

National Institutes of Health

National Heart, Lung, and Blood Institute; Notice of Meeting

Pursuant to section 10(a) of the Federal Advisory Committee Act, as amended (5 U.S.C. Appendix 2), notice is hereby given of a meeting of the Sleep Disorders Research Advisory Board.

The meeting will be open to the public, with attendance limited to space available. Individuals who plan to attend and need special assistance, such as sign language interpretation or other reasonable accommodations, should notify the Contact Person listed below in advance of the meeting.

Name of Committee: Sleep Disorders Research Advisory Board.

Date: December 11, 2002.

Time: 8 a.m. to 5 p.m.

Agenda: To discuss sleep research and education priorities and programs.

Place: National Institutes of Health, Natcher Building, Conference Room D, 45 Center Drive, Bethesda, MD 20892.

Contact Person: Carl E. Hunt, MD, Director, National Center on Sleep Disorders Research, National Heart, Lung, and Blood Institute, National Institutes of Health, 6701 Rockledge Drive, Room 10138, Bethesda, MD 20892, (301) 435–0199.

Information is also available on the Institute's/Center's Home page: *www.nhlbi.nih.gov/meetings/index.htm,* where an agenda and any additional information for the meeting will be posted when available.

(Catalogue of Federal Domestic Assistance Program Nos. 93.233, National Center for Sleep Disorders Research; 93.837, Heart and Vascular Diseases Research; 93.838, Lung Diseases Research; 93.839, Blood Diseases and Resources Research, National Institutes of Health, HHS)

Dated: October 18, 2002.

LaVerne Y. Stringfield,

Director, Office of Federal Advisory Committee Policy.

[FR Doc. 02–27189 Filed 10–24–02; 8:45 am]

BILLING CODE 4140–01–M

DEPARTMENT OF HEALTH AND HUMAN SERVICES

National Institutes of Health

National Institute of Dental & Craniofacial Research; Notice of Closed Meeting

Pursuant to section 10(d) of the Federal Advisory Committee Act, as amended (5 U.S.C. Appendix 2), notice is hereby given of the following meetings.

The meetings will be closed to the public in accordance with the provisions set forth in sections 552b(c)(4) and 552b(c)(6), Title 5 U.S.C., as amended. The grant applications and the discussions could disclose confidential trade secrets or commercial property such as patentable material, and personal information concerning individuals associated with the grant applications, the disclosure of which would constitutue a clearly unwarranted invasion of personal privacy.

Name of Committee: National Institute of Dental and Craniofacial Research Special Emphasis Panel 03–16, Review of R13 Grants.

Date: November 20, 2002.

Time: 2 p.m. to 4 p.m.

Agenda: To review and evaluate grant applications.

Place: 45 Center Drive, Natcher Building, Room 3AN12, Bethesda, MD 20892, (Telephone Conference Call).

Contact Person: H. George Hausch, PhD, Acting Director, 4500 Center Drive, Natcher Building, Rm. 4AN44F, National Institutes of Health, Bethesda, MD 20892, (301) 594–2372.

Name of Committee: National Institute of Dental and Craniofacial Research Special Emphasis Panel 03–06, Review of R01 Grants.

Date: December 3, 2002.

Time: 10 a.m. to 12 p.m.

Agenda: To review and evaluate grant applications and/or proposals.

Place: Natcher Building, Room 4AN44, Bethesda, MD 20892, (Telephone Conference Call).

Contact Person: H. George Hausch, PhD, Acting Director, 4500 Center Drive, Natcher Building, Rm. 4AN44F, National Institutes of Health, Bethesda, MD 20892, (301) 594–2372.

Name of Committee: National Institute of Dental and Craniofacial Research Special Emphasis Panel 03–19, Review of R44 Grants.

Date: December 6, 2002.

Time: 2 p.m. to 4 p.m.

Agenda: To review and evaluate grant applications.

Place: 45 Center Drive, Bethesda, MD 20892, (Telephone Conference Call).

Contact Person: H. Peter Zelazowski, PhD, Scientific Review Administrator, Scientific Review Branch, Division of Extramural Activities, National Inst. of Dental and Craniofacial Research, National Institutes of Health, 45 Center Dr., Rm, Bethesda, MD 20892–6402.

Name of Committee: National Institute of Dental and Craniofacial Research Special Emphasis Panel 03–24, Review of R01 Grants.

Date: December 10, 2002.

Time: 12 p.m. to 2 p.m.

Agenda: To review and evaluate grant applications.

Place: 45 Center Drive, Natcher Bldg., Conf. Rms. A & D, Bethesda, MD 20892, (Telephone Conference Call).

Contact Person: H. George Hausch, PhD, Acting Director, 4500 Center Drive, Natcher Building, Rm. 4AN44F, National Institutes of Health, Bethesda, MD 20892, (301) 594–2372.

Name of Committee: National Institute of Dental and Craniofacial Research Special Emphasis Panel 03–20, Review of R44 Grants.

Date: December 18, 2002.

Time: 2 p.m. to 4 p.m.

Agenda: To review and evaluate grant applications.

Place: 45 Center Drive, Natcher building, Conference Room C, Bethesda, MD 20892, (Telephone Conference Call).

Contact Person: H. Peter Zelazowski, PhD, Scientific Review Administrator, Scientific Review Branch, Division of Extramural Activities, National Inst. of Dental and Craniofacial Research, National Institutes of Health, 45 Center Dr., Rm, Bethesda, MD 20892–6402.

(Catalogue of Federal Domestic Assistance Program Nos. 93.121, Oral Diseases and Disorders Research, National Institutes of Health, HHS)

Dated: October 18, 2002.

LaVerne Y. Stringfield,

Director, Office of Federal Advisory Committee Policy.

[FR Doc. 02–27188 Filed 10–24–02; 8:45 am]

BILLING CODE 4140–01–M

DEPARTMENT OF HEALTH AND HUMAN SERVICES

National Institutes of Health

Center for Scientific Review; Notice of Closed Meetings

Pursuant to section 10(d) of the Federal Advisory Committee Act, as amended (5 U.S.C. Appendix 2), notice is hereby given of the following meetings.

The meetings will be closed to the public in accordance with the provisions set forth in sections 552b(c)(4) and 552b(c)(6), Title 5 U.S.C., as amended. The grant applications and the discussions could disclose confidential trade secrets or commercial property such as patentable material, and personal information concerning individuals associated with the grant applications, the disclosure of which would constitute a clearly unwarranted invasion of personal privacy.

Name of Committee: Center for Scientific Review Special Emphasis Panel, ZRG1 BDCN 5 02M: Cell Differentiation.
Date: October 23, 2002.
Time: 1 p.m. to 2:30 p.m.
Agenda: To review and evaluate grant applications.
Place: NIH, Rockledge 2, Bethesda, MD 20892, (Telephone Conference Call).
Contact Person: Sherry L. Stuesse, PhD, Scientific Review Administrator, Division of Clinical and Population-Based Studies, Center for Scientific Review, National Institutes of Health, 6701 Rockledge Drive, Room 5188, MSC 7846, Bethesda, MD 20892, (301) 435–1785, *stuesses@csr.nih.gov.*
This notice is being published less than 15 days prior to the meeting due to the timing limitations imposed by the review and funding cycle.

Name of Committee: Center for Scientific Review Special Emphasis Panel, ZRG1 IFCN–4 (05) Neurosciences-Chronic Pain.
Date: October 24, 2002.
Time: 12 p.m. to 1 p.m.
Agenda: To review and evaluate grant applications.
Place: NIH, Rockledge 2, Bethesda, MD 20892, (Telephone Conference Call).
Contact Person: Daniel R. Kenshalo, PhD, Scientific Review Administrator, Center for Scientific Review, National Institutes of Health, 6701 Rockledge Drive, Room 5176, MSC 7844, Bethesda, MD 20892, (301) 435–1255.
This notice is being published less than 15 days prior to the meeting due to the timing limitations imposed by the review and funding cycle.

Name of Committee: Center for Scientific Review Special Emphasis Panel, ZRG1 CVB (03)S Aldosterone & CV damage.
Date: October 29, 2002.
Time: 2 p.m. to 3:15 p.m.
Agenda: To review and evaluate grant applications.
Place: NIH, Rockledge 2, Bethesda, MD 20892, (Telephone Conference Call).
Contact Person: Russell T. Dowell, PhD, Scientific Review Administrator, Center for Scientific Review, National Institutes of Health, 6701 Rockledge Drive, Room 4118, MSC 7818, Bethesda, MD 20892, (301) 435–1169. *dowellr@drg.nih.gov.*
This notice is being published less than 15 days prior to the meeting due to the timing limitations imposed by the review and funding cycle.

Name of Committee: Center for Scientific Review Special Emphasis Panel, Mitochondria in Cancer Therapy.
Date: November 5, 2002.
Time: 11:30 a.m. to 1 p.m.
Agenda: To review and evaluate grant applications.
Place: NIH, Rockledge 2, Bethesda, MD 20892, (Telephone Conference Call).
Contact Person: Elaine Sierra-Rivera, PhD, Scientific Review Administrator, Center for Scientific Review, National Institutes of Health, 6701 Rockledge Drive, Room 4136, MSC 7804, Bethesda, MD 20892, (301) 435–1179, *riverse@csr.nih.gov.*
This notice is being published less than 15 days prior to the meeting due to the timing limitations imposed by the review and funding cycle.

Name of Committee: Center for Scientific Review Special Emphasis Panel, Small Business: Infectious Diseases and Microbiology.
Date: November 6–7, 2002.
Time: 8:30 a.m. to 5 p.m.
Agenda: To review and evaluate grant applications.
Place: Holiday Inn, 5520 Wisconsin Avenue, Chevy Chase, MD 20815.
Contact Person: Marian Wachtel, PhD, Scientific Review Administrator, Center for Scientific Review, National Institutes of Health, 6701 Rockledge Drive, Room 4182, MSC 7808, Bethesda, MD 20892, (301) 435–1148.
This notice is being published less than 15 days prior to the meeting due to the timing limitations imposed by the review and funding cycle.

Name of Committee: Center for Scientific Review Special Emphasis Panel, Small Business: Biodefense and Therapeutics.
Date: November 6–7, 2002.
Time: 8:30 a.m. to 5 p.m.
Agenda: To review and evaluate grant applications.
Place: Holiday Inn, 5520 Wisconsin Avenue, Chevy Chase, MD 20815.
Contact Person: Jeanne N. Ketley, PhD, Scientific Review Administrator, Center for Scientific Review, National Institutes of Health, 6701 Rockledge Drive, Room 4186, MSC 7808, Bethesda, MD 20892, (301) 435–1150, *Ketleyj@csr.nih.gov*.
This notice is being published less than 15 days prior to the meeting due to the timing limitations imposed by the review and funding cycle.

Name of Committee: Center for Scientific Review Special Emphasis Panel, ZRG1 SSS2 P01 Engineering Enzyme Specificity.
Date: November 7, 2002.
Time: 8 a.m. to 6 p.m.
Agenda: To review and evaluate grant applications.
Place: Four Points Sheraton, 8400 Wisconsin Avenue, Bethesda, MD 20814
Contact Person: Prabha L. Atreya, PhD, Scientific Review Administrator, Center for Scientific Review, National Institutes of Health, 6701 Rockledge Drive, Room 5156, MSC 7842, Bethesda, MD 20892, (301) 435–8367, *atreyap@csr.nih.gov.*

Name of Committee: Cardiovascular Sciences Integrated Review Group, Cardiovascular Study Section.
Date: November 7–8, 2002.
Time: 8 a.m. to 5 p.m.
Agenda: To review and evaluate grant applications.
Place: Holiday Inn Georgetown, 2101 Wisconsin Avenue, NW., Washington, DC 20007.
Contact Person: Gordon L. Johnson, PhD, Scientific Review Administrator, Center for Scientific Review, National Institutes of Health, 6701 Rockledge Drive, Room 4136, MSC 7802, Bethesda, MD 20892, (301) 435–1212, *johnsong@csr.nih.gov.*

Name of Committee: Center for Scientific Review Special Emphasis Panel, ZRG1 SSS–6 (10)–B Chemistry/Biophysics SBIR/STTR Panel.
Date: November 7–8, 2002.
Time: 8:30 a.m. to 5 p.m.
Agenda: To review and evaluate grant applications.
Place: Melrose Hotel, 2430 Pennsylvania Avenue, NW., Washington, DC 20037.
Contact Person: Vonda K. Smith, PhD, Scientific Review Administrator, Center for Scientific Review, National Institutes of Health, 6701 Rockledge Drive, Room 4172, MSC 7806, Bethesda, MD 20892, (301) 435–1789, *smithvo@csr.nih.gov.*

Name of Committee: Center for Scientific Review Special Emphasis Panel, ZRG1 SSS–0 (10) B:Small Business.
Date: November 7, 2002.
Time: 8:30 a.m. to 3 p.m.
Agenda: To review and evaluate grant applications.
Place: Holiday Inn Georgetown, 2101 Wisconsin Avenue, NW., Washington, DC 20007.
Contact Person: Chhanda L. Ganguly, PhD, Scientific Review Administrator, Center for Scientific Review, National Institutes of Health, 6701 Rockledge Drive, Room 5156, MSC 7842, Bethesda, MD 20892, (301) 435–1739, *gangulyc@csr.nih.gov.*

Name of Committee: Social Sciences, Nursing, Epidemiology and Methods Integrated Review Group, Epidemiology and Disease Control Subcommittee 2, Cancer Epidemiology.
Date: November 7–8, 2002.
Time: 8:30 a.m. to 4:30 p.m.
Agenda: To review and evaluate grant applications.
Place: Bethesda Holiday Inn, 8120 Wisconsin Avenue, Bethesda, MD 20814.
Contact Person: Denise Wiesch PhD, Scientific Review Administrator, Center for Scientific Review, National Institutes of Health, 6701 Rockledge Drive, Room 3150, MSC 7770, Bethesda, MD 20892, (301) 435–0684.

Name of Committee: AIDS and Related Research Integrated Review Group, AIDS and Related Research 7.
Date: November 7–8, 2002.
Time: 8:30 a.m. to 6 p.m.
Agenda: To review and evaluate grant applications.
Place: Holiday Inn Georgetown, 2101 Wisconsin Avenue, NW., Washington, DC 20007.
Contact Person: Ranga V. Srinivas, PhD, Scientific Review Administrator, Center for Scientific Review, National Institutes of Health, 6701 Rockledge Drive, Room 5222, MSC 7852, Bethesda, MD 20892, (301) 435–1167, *srinivar@csr.nih.gov.*

Name of Committee: Center for Scientific Review Special Emphasis Panel, Reparative Medicine ZRG1 SSS–M 02.
Date: November 7, 2002.
Time: 11 a.m. to 12 p.m.
Agenda: To review and evaluate grant applications.
Place: Holiday Inn Select, 8120 Wisconsin Avenue, Bethesda, MD 20814
Contact Person: Jean D. Sipe, PhD, Scientific Review Administrator, Center for Scientific Review, National Institutes of

Health, 6701 Rockledge Drive, Room 4106, MSC 7814, Bethesda, MD 20892, (301) 435–1743, *sipej@csr.nih.gov.*

Name of Committee: Center for Scientific Review Special Emphasis Panel, Reparative Medicine BRPs (PA–02–010) ZRG1 SSS–M 03.

Date: November 7–8, 2002.

Time: 2 p.m. to 6 p.m.

Agenda: To review and evaluate grant applications.

Place: Holiday Inn Select, 8120 Wisconsin Avenue, Bethesda, MD 20814.

Contact Person: Jean D. Sipe, PhD, Scientific Review Administrator, Center for Scientific Review, National Institutes of Health, 6701 Rockledge Drive, Room 4106, MSC 7814, Bethesda, MD 20892–7814, (301) 435–1743, *sipej@csr.nih.gov.*

Name of Committee: Center for Scientific Review Special Emphasis Panel, ZRG1 SSS–O (13)B: Small Business.

Date: November 7, 2002.

Time: 3 p.m. to 4 p.m.

Agenda: To review and evaluate grant applications.

Place: Holiday Inn Georgetown, 2101 Wisconsin Avenue, NW., Washington, DC 20007.

Contact Person: Chhanda L. Ganguly, PhD, Scientific Review Administrator, Center for Scientific Review, National Institutes of Health, 6701 Rockledge Drive, Room 5156, MSC 7842, Bethesda, MD 20892, (301) 435–1739, *ganguly@csr.nih.gov.*

Name of Committee: Center for Scientific Review Special Emphasis Panel, ZRG1 SNEM–5 02M Member Conflict: Epidemology.

Date: November 8, 2002.

Time: 8 a.m. to 5 p.m.

Agenda: To review and evaluate grant applications.

Place: Holiday Inn, 5520 Wisconsin Avenue, Chevy Chase, MD 20815.

Contact Person: Ann Hardy, DRPH, Scientific Review Administrator, Center for Scientific Review, National Institutes of Health, 6701 Rockledge Drive, Room 3158, MSC 7770, Bethesda, MD 20892, (301) 435–0695, *hardyan@csr.nih.gov.*

Name of Committee: Center for Scientific Review Special Emphasis Panel, ZRG1 CCVS 01: Clinical CV Science.

Date: November 8, 2002.

Time: 8 a.m. to 5 p.m.

Agenda: To review and evaluate grant applications.

Place: Holiday Inn Bethesda, 8120 Wisconsin Avenue, Bethesda, MD 20814.

Contact Person: Russell T. Dowell, PhD, Scientific Review Administrator, Center for Scientific Review, National Institutes of Health, 6701 Rockledge Drive, Rm. 2180, MSC 7818, Bethesda, MD 20892, (301) 435–1850, *dowellr@csr.nih.gov.*

Name of Committee: Center for Scientific Review Special Emphasis Panel, ZRG1 SSS–O 12 (B): Small Business.

Date: November 8, 2002.

Time: 8:30 a.m. to 4 p.m.

Agenda: To review and evaluate grant applications.

Place: Holiday Inn Georgetown, 2101 Wisconsin Avenue, NW., Washington, DC 20007.

Contact Person: Chhanda L. Ganguly, PhD, Scientific Review Administrator, Center for Scientific Review, National Institutes of Health, 6701 Rockledge Drive, Room 5156, MSC 7842, Bethesda, MD 20892, (301) 435–1739, *ganguly@csr.nih.gov.*

Name of Committee: Center for Scientific Review Special Emphasis Panel, Cardiovascular Response to Psychological Stress.

Date: November 8, 2002.

Time: 1 p.m. to 2 p.m.

Agenda: To review and evaluate grant applications.

Place: NIH, Rockledge 2, Bethesda, MD 20892, (Telephone Conference Call).

Contact Person: Jeffrey W. Elias, PhD, Scientific Review Administrator, Center for Scientific Review, National Institutes of Health, 6701 Rockledge Drive, Room 3170, MSC 7848, Bethesda, MD 20892, (301) 435–0913, *eliasj@csr.nih.gov.*

Name of Committee: Center for Scientific Review Special Emphasis Panel, New Therapeutic Approaches in Cancer.

Date: November 8, 2002.

Time: 1:30 p.m. to 3:30 p.m.

Agenda: To review and evaluate grant applications.

Place: NIH, Rockledge 2, Bethesda, MD 20892, (Telephone Conference Call).

Contact Person: Elaine Sierra-Rivera, PhD, Scientific Review Administrator, Center for Scientific Review, National Institutes of Health, 6701 Rockledge Drive, Room 4136, MSC 7804, Bethesda, MD 20892, (301) 435–1779, *riverse@csr.nih.gov.*

Name of Committee: Center for Scientific Review Special Emphasis Panel, Vision Sciences.

Date: November 8, 2002.

Time: 2 p.m. to 3 p.m.

Agenda: To review and evaluate grant applications.

Place: NIH, Rockledge 2, Bethesda, MD 20892, (Telephone Conference Call).

Contact Person: John Bishop, PhD, Scientific Review Administrator, Center for Scientific Review, National Institutes of Health, 6701 Rockledge Drive, Room 5180, MSC 7844, Bethesda, MD 20892, (301) 435–1250.

Name of Committee: Center for Scientific Review Special Emphasis Panel, Atherosclierosis in Mutant Mice.

Date: November 8, 2002.

Time: 3 p.m. to 4 p.m.

Agenda: To review and evaluate grant applications.

Place: NIH, Rockledge 2, Bethesda, MD 20892, (Telephone Conference Call).

Contact Person: Joyce C. Gibson, DSC, Scientific Review Administrator, Center for Scientific Review, National Institutes of Health, 6701 Rockledge Drive, Room 4172, MSC 7804, Bethesda, MD 20892, (301) 435–4522, *gibsonj@csr.nih.gov.*

(Catalogue of Federal Domestic Assistance Program Nos. 93.306, Comparative Medicine, 93.306; 93.333, Clinical Research, 93.333, 93.337, 93.393–93.396, 93.837–93.844, 93.846–93.878, 93.892, 93.893, National Institutes of Health, HHS)

Dated: October 18, 2002.

LaVerne Y. Stringfield,

Director, Office of Federal Advisory Committee Policy.

[FR Doc. 02–27190 Filed 10–24–02; 8:45 am]

BILLING CODE 4140–01–M

DEPARTMENT OF HOUSING AND URBAN DEVELOPMENT

[Docket No. FR–4730–N–43]

Facilities To Assist the Homeless

AGENCY: Office of the Assistant Secretary for Community Planning and Development, HUD.

ACTION: Notice.

SUMMARY: This Notice identifies unutilized, underutilized, excess, and surplus Federal property reviewed by HUD for suitability for possible use to assist the homeless.

EFFECTIVE DATE: October 25, 2002.

FOR FURTHER INFORMATION CONTACT: Mark Johnston, Department of Housing and Urban Development, Room 7262, 451 Seventh Street SW., Washington, DC 20410; telephone (202) 708–1234; TTY number for the hearing- and speech-impaired (202) 708–2565, (these telephone numbers are not toll-free), or call the toll-free Title V information line at 1–800–927–7588.

SUPPLEMENTARY INFORMATION: In accordance with the December 12, 1988 court order in *National Coalition for the Homeless* v. *Veterans Administration,* No. 88–2503–OG (D.D.C.), HUD publishes a Notice, on a weekly basis, identifying unutilized, underutilized, excess and surplus Federal buildings and real property that HUD has reviewed for suitability for use to assist the homeless.

Today's Notice is for the purpose of announcing that no additional properties have been determined suitable or unsuitable this week.

Dated: October 17, 2002.

John D. Garrity

Director, Office of Special Needs Assistance Programs.

[FR Doc. 02–26893 Filed 10–24–02; 8:45 am]

BILLING CODE 4210–29–M

DEPARTMENT OF THE INTERIOR

National Park Service

Notice of Intent To Prepare an Environmental Impact Statement (EIS) for the General Management Plan (GMP), Everglades National Park, FL

SUMMARY: Under the provisions of the National Environmental Policy Act of 1969, the National Park Service is preparing a General Management Plan and Environmental Impact Statement (GMP/EIS) for Everglades National Park, Florida.

The park's current *Master Plan*, approved in 1979, is no longer adequate to address the policy and operational issues now facing Everglades National Park. Conditions have changed over the last 23 years, and that plan does not provide sufficient direction for protecting natural and cultural resources and offering high quality visitor opportunities. The *Master Plan* predates the Everglades National Park Protection and Expansion Act of 1989, which increased the park by 109,000 acres and directed further protection of valuable ecological resources. The GMP/EIS will identify an overall direction for park management for the next 20 years by clearly prescribing desired types and levels of resource conditions and visitor experiences to be achieved throughout the park.

Determination of what should be achieved will be based on review of park legislation, purpose, significance and special mandates, and the body of laws and policies directing park management.

The National Park Service is initiating the scoping process for the GMP/EIS. In cooperation with Indian tribes, local, state, and other federal agencies, and the public, the plan will correct existing management deficiencies by determining: desired natural and cultural resource conditions, management prescriptions for all areas of the park, carrying capacities for resources and visitor use, appropriate types and levels of development and recreational use, and new opportunities for working cooperatively with neighboring communities.

Specific issues that will be addressed in the GMP/EIS will be determined by analyzing input from the Indian tribes; public; local, state and other federal agencies; public and private organizations with an interest in Everglades National Park; and park staff. The issues determined to be significant will guide development of alternatives for future management of Everglades National Park and will provide the framework for analyzing the impacts of the proposed alternatives.

DATES: To determine the scope of issues to be addressed in the GMP/EIS and identify pertinent issues related to the project, an introductory GMP newsletter that includes a public response form will be distributed to the public in September 2002. In addition, public scoping meetings will be held in the Fall of 2002. Public notice of the specific dates, times, and locations of the meetings will be provided in the newsletter, announced in local media, and posted on the Internet at *http://www.nps.gov/ever/planning/index.htm*. At each public scoping meeting representatives of the National Park Service will be available to discuss issues, concerns, and other matters related to the GMP project.

ADDRESSES: Additional comments or requests to be placed on the mailing list should be addressed to Superintendent, Everglades National Park, Attention: Fred Herling, 40001 State Rd. 9336, Homestead, Florida 33034.

FOR FURTHER INFORMATION CONTACT: Fred Herling, Supervisory Park Planner, Everglades National Park, 40001 State Road 9336, Homestead, FL, 33034, telephone 305–242–7704. Email: *Fred_Herling@nps.gov*.

SUPPLEMENTARY INFORMATION: The draft and final GMP/EIS documents will be distributed to all known interested parties and appropriate agencies. Full participation by Indian tribes, federal, state, and local agencies as well as other concerned organizations and private citizens is invited throughout the preparation of this document. At least six public meetings will be held to initiate the gathering of input for the GMP/EIS. The anticipated meeting locations are: Miami, Florida Keys, Florida City/Homestead, Everglades City, Naples, and Washington DC. Dates, times, and locations of the meetings will be provided in the newsletter, announced in local media, and posted on the Internet at *http://www.nps.gov/ever/planning/index.htm*.

Everglades National Park is the largest national park east of the Rocky Mountains, encompassing 1,509,000 acres of land and water in Dade, Monroe, and Collier counties, Florida. The park includes the largest designated wilderness area in the Eastern United States, totaling 1,296,500 acres. Congress called for the park to be ''permanently reserved as a wilderness,'' preserving essential primitive conditions, including the natural abundance, diversity, behavior, and ecological integrity of unique flora and fauna. Located at the interface of temperate and subtropical environments, the park has a great diversity of resources including our nation's largest sawgrass prairie and mangrove ecosystem, the most significant breeding ground for tropical birds in North America, and 21 federally-listed threatened and endangered species. The park has over one million visitors each year.

The GMP/EIS will identify alternative management approaches based on the issues identified during the scoping phase of the project. The GMP/EIS will disclose to the public and decision makers the environmental consequences of implementing each alternative management approach. After reviewing the consequences and listening to public concerns, the decision-makers will select a preferred alternative that will guide management of Everglades National Park for the next 20 years. The responsible official for the Environmental Impact Statement is the Regional Director, National Park Service, Southeast Region, 100 Alabama Street SW., 1924 Building, Atlanta, Georgia 30303.

Our practice is to make comments, including names and home addresses of respondents, available for public review during regular business hours. If you wish for us to withhold your name and/or address, you must state this prominently at the beginning of your comment. However, we will not consider anonymous comments. We will make all submissions from organizations or businesses, and from individuals identifying themselves as representatives or officials of organizations or businesses, available for public inspection in their entirety.

Dated: August 1, 2002.

Patricia A. Hooks,

Acting Regional Director, Southeast Region.

[FR Doc. 02–27250 Filed 10–24–02; 8:45 am]

BILLING CODE 4310–70–P

DEPARTMENT OF THE INTERIOR

National Park Service

National Register of Historic Places; Notification of Pending Nominations

Nominations for the following properties being considered for listing in the National Register were received by the National Park Service before October 5, 2002. Pursuant to section 60.13 of 36 CFR Part 60 written comments concerning the significance of these properties under the National Register criteria for evaluation may be forwarded by United States Postal Service, to the National Register Historic

Places, National Park Service, 1849 C St. NW., NC400, Washington, DC 20240; by all other carriers, National Register of Historic Places, National Park Service, 1201 Eye St. NW., 8th floor, Washington DC 20005; or by fax, 202–343–1836. Written or faxed comments should be submitted by November 12, 2002.

Paul R. Lusignan,

Acting Keeper of the National Register of Historic Places.

GEORGIA

Cobb County

Cowen, Stephen D., House, 4940 Cowen Rd., Acworth, 02001299

KANSAS

Cloud County

Glasco Downtown Historic District, Roughly along Main St. from Railroad Av. to Fisher St., and Along Railroad Ave and Fisher St. bet Main and Buffalo Sts., Glasco, 02001307

Shawnee County

Holliday Park Historic District I, Roughly bounded by 10th Ave., Taylor, Polk, Huntoon, Clay and Fillmore Sts., Topeka, 02001308

Holliday Park Historic District II, 1009, 1015, 1019, 1021, 1025, 1031, 1035 SW Fillmore St., Topeka, 02001309

MISSOURI

Cole County

Broadway—Dunklin Historic District, (Southside Munichburg, Missouri MPS) Most of 600 Blk of Broadway, and the 200 and 300 Blks of West Dunklin St., Jefferson City, 02001300

Burch, Nelson C. and Gertrude A., House, (Southside Munichburg, Missouri MPS) 115 W. Atchison St., Jefferson City, 02001302

Burch, Oscar G. and Mary H., House, (Southside Munichburg, Missouri MPS) 924 Jefferson St., Jefferson City, 02001301

Grove, Claud D and Berenice Sinclair Grove House, 505 E. State St., Jefferson City, 02001310

Hess, Philip, House, (Southside Munichburg, Missouri MPS), 714 Washington St., Jefferson City, 02001304

Schmidt, Charles J. and Clara B. House, (Southside Munichburg, Missouri MPS), 215 W. Atchison St., Jefferson City, 02001303

Thomas, Albert and Wilhelmina, House, (Southside Munichburg, Missouri MPS), 224 W. Elm St., Jefferson City, 02001305

Zuendt, William E. and Frederica M., House, (Southside Munichburg, Missouri MPS), 920 Jefferson St., Jefferson City, 02001306

Lincoln County

Soil Erosion Nursery, United States Department of Agriculture, 2803 N MO 79, Elsberry, 02001311

New York

Columbia County

Requa House, 9 Requa Rd., Stuyvesant, 02001325

Delaware County

West Kortright Presbyterian Church, 49 W. Kortright Church Rd., West Kortright, 02001326

Erie County

Hellenic Orthodox Church of the Annunciation, Address Restricted, Buffalo, 02001329

Jefferson County

Holland Library, 7 Market St., Alexandria Bay, 02001330

Livingston County

Williamsburg Cemetery, Abel Rd., Hampton Corners, 02001328

Montgomery County

Pawling Hall, 86 Pawling St., Hagaman, 02001331

Niagara County

Bixby, Constant Riley W., House, 2888 Carmen Rd., Hartland, 02001333

Bradley, Amzi, Farmstead, 8915 Bradley Rd., Hartland, 02001332

Newton, Philo Cobblestone House, (Cobblestone Architecture of New York State MPS), 3573 Wruck Rd., Hartland, 02001334

Oneida County

Deansboro Railroad Station, 2707 NY 315, Deansboro, 02001327

Ulster County

Dubois—Sarles Octagon, 16 South St., Marlboro, 02001322

House at 184 Albany Avenue, (Albany Avenue, Kingston, Ulster County, New York MPS), 184 Albany Ave., Kingston, 02001317

House at 313 Albany Avenue, (Albany Avenue, Kingston, Ulster County, New York MPS), 313 Albany Ave., Kingston, 02001313

House at 322 Albany Avenue, (Albany Avenue, Kingston, Ulster County, New York MPS), 322 Albany Ave., Kingston, 02001318

House at 322 Albany Avenue, (Albany Avenue, Kingston, Ulster County, New York MPS), 322 Albany Ave., Kingston, 02001319

Kirkland Hotel, 2 Main St., Kingston, 02001323

Payne, Col. Oliver Hazard, Estate, US 9W, Esopus, 02001324

Reformed Protestamt Dutch Church of Klyne Esopus, 764 U.S. 9W, Esopus, 02001321

Sharp Burial Ground, (Albany Avenue, Kingston, Ulster County, New York MPS), Albany Ave., Kingston, 02001320

Smith, George J., House, (Albany Avenue, Kingston, Ulster County, New York MPS), 109 Albany Ave., Kingston, 02001316

Smith, John, House, (Albany Avenue, Kingston, Ulster County, New York MPS), 103 Albany Ave., Kingston, 02001315

Ten Broeck, Jacob, Stone House, (Albany Avenue, Kingston, Ulster County, New York MPS), 169 Albany Ave., Kingston, 02001312

PENNSYLVANIA

Fayette County

Aaron Building, Pittsburgh St. and Apple St., Connellsville, 02001336

Colonial National Bank Building, 101 E. Crawford St., Connellsville, 02001337

McClenathan, J.C., Dr., House and Office, 134 S. Pittsburgh St., Connellsville, 02001335

TENNESSEE

Davidson County

Oglesby School, 5724 Edmondson Pike, Nashville, 02001340

Overton County

Alpine Institute, TN 52, Alpine, 02001339

Warren County

First Methodist Church, 200 W. Main St., McMinnville, 02001341

Weakley County

First Christian Church, College St., Gleason, 02001338

VERMONT

Windham County

First Congregational Church and Meetinghouse, (Religious Buildings, Sites and Structures in Vermont MPS), Near jct. of VT 30 and VT 35, Townshend, 02001344

Windsor County

Saddlebow Farm, 2477 Gold Coast Rd., Bridgewater, 02001345

WISCONSIN

Crawford County

Commercial Hotel, 201 W. Blackhawk Ave., Prairie du Chien, 02001342

Dane County

Wisconsin Wagon Company Factory, 602 Railroad St., Madison, 02001343

[FR Doc. 02–27246 Filed 10–24–02; 8:45 am]

BILLING CODE 4310–70–P

DEPARTMENT OF THE INTERIOR

National Park Service

Notice of Intent to Repatriate Cultural Items: UCLA Fowler Museum of Cultural History, University of California, Los Angeles, Los Angeles, CA

AGENCY: National Park Service, Interior.

ACTION: Notice.

Notice is hereby given in accordance with the Native American Graves Protection and Repatriation Act (NAGPRA), 25 U.S.C. 3005, Sec. 7, of the intent to repatriate cultural items in the possession of the UCLA Fowler Museum of Cultural History, University of California, Los Angeles, Los Angeles, CA, that meet the definition of

''unassociated funerary objects'' under 25 U.S.C. 3001.

This notice is published as part of the National Park Service's administrative responsibilities under NAGPRA, 25 U.S.C. 3003, Sec. 5 (d)(3). The determinations within this notice are the sole responsibility of the museum, institution, or Federal agency that has control of these cultural items. The National Park Service is not responsible for the determinations within this notice.

In 1965, 33 unassociated funerary objects were removed from the Rancho site (CA-RIV-364), a documented cremation and burial site, Riverside County, CA, by Dr. Joseph L. Chartkoff. The objects are 21 Tizon Brown pottery sherds, 1 lathe-turned ink bottle, 3 glass fragments, 1 basalt core, 1 unmodified basalt flake, 1 unmodified stone flake, 1 brass button, 1 burned deer bone, 1 porcelain plate fragment, and 2 unmodified quartz flakes. Dr. Chartkoff donated these cultural items to the University of California, Los Angeles the same year.

The Rancho site (CA-RIV-364) is close to the present-day Pechanga Reservation, in the valley of Temecula Creek. Geographical location and archeological and oral traditional evidence support the association of this site with precontact and historic village sites within the territory of the Pechanga Band of Luiseno Mission Indians of the Pechanga Reservation, California. The site is well known, by both oral tradition and archeological documentation, to be a precontact and postcontact cremation and burial site. Members of the Pechanga Band of Luiseno Indians Cultural Committee identified the artifacts collected there as part of the traditional Luiseno cremation and memorial offering rites. According to Raymond Basquez, Chairperson of the tribal Cultural Resources Department, Elder, and traditional religious leader, when traditional cremation practices gave way after contact to inhumation, Luiseno peoples' personal possessions often were collected, burned, and placed at traditional cremation/cemetery areas. Some artifacts, such as the plate fragment, broken glass, lathe-turned inkbottle, and metal button, appear to date to the Spanish or Mexican period (late 1700s-early 1800s) in California. The Tizon Brown pottery sherds are consistent with a Late Prehistoric and historic age.

Officials of the UCLA Fowler Museum of Cultural History have determined that, pursuant to 25 U.S.C. 3001, Sec. 2 (3)(B), the 33 objects listed above are reasonably believed to have been placed with or near individual human remains at the time of death or later as part of the death rite or ceremony and are believed, by a preponderance of the evidence, to have been removed from a specific burial site of Native American individuals. Officials of the UCLA Fowler Museum of Cultural History also have determined that, pursuant to 25 U.S.C. 3001, Sec. 2 (2), there is a relationship of shared group identity that can be reasonably traced between these unassociated funerary objects and the Pechanga Band of Luiseno Mission Indians of the Pechanga Reservation, California.

Representatives of any other Indian tribe that believes itself to be culturally affiliated with these unassociated funerary objects should contact Diana Wilson, UCLA NAGPRA Coordinator, Office of the Vice Chancellor, Research, University of California, Los Angeles, Box 951405, Los Angeles, California 90095-1405, telephone (310) 825-1864, before November 25, 2002. Repatriation of the unassociated funerary objects to the Pechanga Band of Luiseno Mission Indians of the Pechanga Reservation, California may begin after that date if no additional claimants come forward.

Officials of the UCLA Fowler Museum of Cultural History are responsible for notifying officials of the Pechanga Band of Luiseno Mission Indians of the Pechanga Reservation, California that this notice has been published.

Dated: September 25, 2002

Robert Stearns,

Manager, National NAGPRA Program.

[FR Doc. 02–27248 Filed 10–24–02; 8:45 am]

BILLING CODE 4310–70–S

DEPARTMENT OF THE INTERIOR

National Park Service

Notice of Inventory Completion: Williamson Museum, Northwestern State University, Natchitoches, LA

AGENCY: National Park Service, Interior.

ACTION: Notice.

Notice is hereby given under the Native American Graves Protection and Repatriation Act (NAGPRA), 25 U.S.C. 3003, Sec. 5, of the completion of an inventory of human remains and associated funerary objects in the possession of the Williamson Museum, Northwestern State University, Natchotoches, LA. These human remains and associated funerary objects were removed from the Colfax Ferry site (16-NA-15), Rapids Parish, LA.

This notice is published as part of the National Park Service's administrative responsibilities under NAGPRA, 25 U.S.C. 3003, Sec. 5 (d)(3). The determinations within this notice are the sole responsibility of the museum, institution, or Federal Agency that has control of these Native American human remains and associated funerary objects. The National Park Service is not responsible for the determinations within this notice.

A detailed assessment of the human remains and associated funerary objects was made by the Williamson Museum professional staff and representatives of the Tunica-Biloxi Indian Tribe of Louisiana.

In 1959-1960, human remains were discovered by Dr. Clarence H. Webb during archeological excavations at the Colfax Ferry site (16-NA-15), Rapids Parish, LA. While most of the human remains were left in situ, the remains of seven individuals were removed by Dr. Webb and donated to the Williamson Museum in 1991. No known individuals were identified. The 74 associated funerary objects are 3 spoon fragments, 1 pewter spoon handle, 2 wrought nails, 19 cut nails, 2 pair of scissors, 1 pin, 2 iron tools, 1 butcher knife handle, 1 table knife, 1 long flattened iron tube, 1 ferrous can (fragments), 1 ferrous can or kettle (fragments), 10 wire rim can fragments, 1 brass disc, 1 silver earring dangle, 6 circular silver ornaments, 1 peppermint bottle, 2 French glass bottles, 1 goblet base, 2 cloth fragments, 3 gunflints, 1 lead musket ball, 1 quartz strike-a-lite, 1 can of vermillion, 1 flint flake, 1 triangular chert biface, and 7 European ceramic sherds (banded ware, blue-edged ware, cream ware). Dr. Webb donated other items from the Colfax Ferry site (16-NA-15) to the Louisiana Division of Archaeology.

The funerary objects recovered from the Colfax Ferry site (16-NA-15) indicate that these human remains and associated funerary objects were most likely interred between 1764 and 1820. Historiographic data, oral traditions, and information gained in consultation concerning the collection indicate that the Colfax Ferry site (16-NA-15) is located in the area occupied by the Pascagoula and Biloxi Indians during the late 18th and early 19th centuries. Descendants of the Pascagoula and Biloxi Indians are represented by the Tunica-Biloxi Indian Tribe of Louisiana.

Officials of the Williamson Museum have determined that, pursuant to 25 U.S.C. 3001, Sec. 2 (9) and 2 (10), the human remains listed above represent the physical remains of seven individuals of Native American ancestry. Officials of the Williamson Museum also have determined that, pursuant to 25 U.S.C. 3001, Sec. 2 (3)(A), the 74 associated funerary objects

listed above are reasonably believed to have been placed with or near individual human remains at the time of death or later as part of a death rite or ceremony. Lastly, officials of the Williamson Museum have determined that, pursuant to 25 U.S.C. 3001, Sec. 2 (2), there is a relationship of shared group identity that can be reasonably traced between these Native American human remains and associated funerary objects and the Tunica-Biloxi Indian Tribe of Louisiana.

Representatives of any other Indian tribe that believes itself to be culturally affiliated with these human remains and associated funerary objects should contact Dr. Pete Gregory, Director, Williamson Museum, Northwestern State University, Natchitoches, LA 71457, telephone (318) 357-4364, before November 25, 2002. Repatriation of these human remains and associated funerary objects to the Tunica-Biloxi Indian Tribe of Louisiana may begin after that date if no additional claimants come forward.

The Williamson Museum is responsible for notifying the Tunica-Biloxi Indian Tribe of Louisiana that this notice has been published.

Dated: September 30, 2002.

Robert Stearns,

Manager, National NAGPRA Program.

[FR Doc. 02–27249 Filed 10–24–02; 8:45 am]

BILLING CODE 4310–70–S

INTERNATIONAL TRADE COMMISSION

[Investigations Nos. 731–TA–1014–1018 (Preliminary)]

Polyvinyl Alcohol from China, Germany, Japan, Korea, and Singapore

Determinations

On the basis of the record [1] developed in the subject investigations, the United States International Trade Commission determines, pursuant to section 733(a) of the Tariff Act of 1930 (19 U.S.C. 1673b(a)) (the Act), that there is a reasonable indication that an industry in the United States is materially injured by reason of imports from China, Germany, Japan, and Korea of polyvinyl alcohol, provided for in subheading 3905.30.00 of the Harmonized Tariff Schedule of the United States, that are alleged to be sold in the United States at less than fair value (LTFV). The Commission also determines that imports of polyvinyl alcohol from Singapore are negligible and therefore its investigation with regard to Singapore is terminated pursuant to section 733(a) of the Act.[2]

Commencement of Final Phase Investigations

Pursuant to §207.18 of the Commission's rules, the Commission also gives notice of the commencement of the final phase of its investigations. The Commission will issue a final phase notice of scheduling, which will be published in the **Federal Register** as provided in § 207.21 of the Commission's rules, upon notice from the Department of Commerce of affirmative preliminary determinations in the investigations under section 733(b) of the Act, or, if the preliminary determinations are negative, upon notice of affirmative final determinations in those investigations under section 735(a) of the Act. Parties that filed entries of appearance in the preliminary phase of the investigations need not enter a separate appearance for the final phase of the investigations. Industrial users, and, if the merchandise under investigation is sold at the retail level, representative consumer organizations have the right to appear as parties in Commission antidumping and countervailing duty investigations. The Secretary will prepare a public service list containing the names and addresses of all persons, or their representatives, who are parties to the investigations.

Background

On September 5, 2002, a petition was filed with the Commission and Commerce by Celanese Chemicals, Ltd. of Dallas, TX and E.I. du Pont de Nemours & Co. of Wilmington, DE, alleging that an industry in the United States is materially injured or threatened with material injury by reason of LTFV imports of polyvinyl alcohol from China, Germany, Japan, Korea, and Singapore. Accordingly, effective September 5, 2002, the Commission instituted antidumping duty investigations Nos. 731–TA–1014–1018 (Preliminary).

Notice of the institution of the Commission's investigations and of a public conference to be held in connection therewith was given by posting copies of the notice in the Office of the Secretary, U.S. International Trade Commission, Washington, DC, and by publishing the notice in the **Federal Register** of September 13, 2002 (67 FR 58076). The conference was held in Washington, DC, on September 26, 2002, and all persons who requested the opportunity were permitted to appear in person or by counsel.

The Commission transmitted its determinations in these investigations to the Secretary of Commerce on October 21, 2002. The views of the Commission are contained in USITC Publication 3553 (October 2002), entitled Polyvinyl Alcohol from China, Germany, Japan, Korea, and Singapore: Investigations Nos. 731–TA–1014–1018 (Preliminary).

By order of the Commission.

Issued: October 22, 2002.

Marilyn R. Abbott,

Secretary to the Commission.

[FR Doc. 02–27229 Filed 10–24–02; 8:45 am]

BILLING CODE 7020–02–P

[1] The record is defined in sec. 207.2(f) of the Commission's Rules of Practice and Procedure (19 CFR 207.2(f)).

[2] Commissioner Lynn M. Bragg dissenting.

DEPARTMENT OF JUSTICE

Notice of Lodging of Consent Decree Pursuant to the Clean Water Act, the Clean Air Act, the Comprehensive Environmental Response, Compensation, and Liability Act, and the Emergency Planning and Community Right To Know Act

In accordance with Departmental policy, 28 CFR 50.7, notice is hereby given that a proposed consent decree in *United States* v. *National Cooperative Refinery Association,* Civil Action No. 02–1363WEB, was lodged on October 11, 2002, with the United States District Court for the District of Kansas. The consent decree requires defendants National Cooperative Refinery Association to perform injunctive relief, requiring the cleaning and removal from service of two oil pipelines and to pay a total of $950,000 in civil penalties by electronic funds transfer to the United States Department of Justice, Mellon Bank.

The Department of Justice will receive, for a period of thirty (30) days from the date of this publication, comments relating to the proposed consent decree. Comments should be addressed to the Assistant Attorney General, Environmental and Natural Resources Division, PO Box 7611, U.S. Department of Justice, Washington, DC 20044–7611, and should refer to *United States* v. *National Cooperative Refinery Association,* DOJ Ref. #90–5–1–1–06025.

The proposed consent decree may be examined at the office of the United States Attorney, 1200 Epic Center, 301 N. Main, Wichita, KS 67202 and at U.S. EPA Region 7, 901 N. 5th Street, Kansas City, KS 66101. A copy of the consent decree may also be obtained by mail from the Consent Decree Library, PO Box 7611, U.S. Department of Justice,

Washington, DC 20044–7611 or by faxing a request to Tonia Fleetwood, fax no. (202) 514–0097, phone confirmation number (202) 514–1547. In requesting a copy, please enclose a check in the amount of $12.00 (25 cents per page reproduction cost) payable to the U.S. Treasury.

Robert Maher,

Assistant Section Chief, Environmental Enforcement Section.

[FR Doc. 02–27220 Filed 10–24–02; 8:45 am]

BILLING CODE 4410–15–M

DEPARTMENT OF JUSTICE

[AAG/A Order No. 293–2002]

Privacy Act of 1974; System of Records

Pursuant to the Privacy Act of 1974 (5 U.S.C. 552a), notice is given that the Department of Justice proposes to make a minor change in its system of records entitled ''Correspondence Management Systems (CMS) for the Department of Justice (DOJ),'' DOJ–003. This system was originally published on June 4, 2001 (66 FR 29992); the correction notice was published on June 29, 2001 (66 FR 34743). The final rule for DOJ–003 was published August 8, 2001 (66 FR 41445); the correction notice was published on August 17, 2001 (66 FR 43308). This system is now being modified as follows and will be effective October 25, 2002.

The Department is retaining the entirety of the previously published notice and rule. There is only one addition to the notice. In the preamble to DOJ–003, the Department lists the notices previously published by individual Department of Justice components that are now covered by DOJ–003. This modification adds to that list the following notice of system of records: Office of the Pardon Attorney, ''Miscellaneous Correspondence File,'' JUSTICE/OPA–002 (58 FR 6981, February 3, 1993).

A notice to remove OPA–002 from the Department's compilation of Privacy Act systems of records is published in today's **Federal Register**.

Therefore, the Privacy Act notice for the Office of the Pardon Attorney (OPA), ''Miscellaneous Correspondence File, OPA–002'', is added to the notice of the DOJ's Correspondence Management File, DOJ–003.''

Dated: October 15, 2002.

Robert F. Diegelman,

Acting Assistant Attorney General for Administration.

[FR Doc. 02–27218 Filed 10–24–02; 8:45 am]

BILLING CODE 4410–29–P

DEPARTMENT OF JUSTICE

[AAG/A Order No. 294–2002]

Privacy Act of 1974; Removal of a System of Records

Pursuant to the provisions of the Privacy Act 1974 (5 U.S.C. 552a), notice is given that the Department of Justice, Office of the Pardon Attorney (OPA) is removing a system of records, entitled ''Miscellaneous Correspondence File, OPA–002.'' This system of records was last published February 3, 1993 (58 FR 6981).

The reason for the removal of the notice for OPA–002 is that this system of records notice is being incorporated into the notice for the ''Correspondence Management System (CMS) for the Department of Justice (DOJ), DOJ–003,'' published June 4, 2001 (66 FR 29992), with correction notice published June 29, 2001 (66 FR 34743). The final rule for DOJ–003 was published August 8, 2001 (66 FR 41445), with correction notice published August 17, 2001 (66 FR 43308).

A notice to modify DOJ–003, with the addition of the notice of the Office of the Pardon Attorney's ''Miscellaneous Correspondence File,'' is being published in today's **Federal Register**.

Therefore, the ''Miscellaneous Correspondence File, OPA–002'' is removed from the Department's compilation of Privacy Act systems of records.

Dated: October 15, 2002.

Robert F. Diegelman,

Acting Assistant Attorney General for Administration.

[FR Doc. 02–27219 Filed 10–24–02; 8:45 am]

BILLING CODE 4410–29–P

DEPARTMENT OF JUSTICE

Office of the Attorney General

[OAG 103F; A.G. Order No. 2623–2002]

RIN 1105–AA81

Guidelines for the Campus Sex Crimes Prevention Act Amendment to the Jacob Wetterling Crimes Against Children and Sexually Violent Offender Registration Act

AGENCY: Department of Justice.

ACTION: Final guidelines.

SUMMARY: The United States Department of Justice is publishing Final Guidelines to implement an amendment to the Jacob Wetterling Crimes Against Children and Sexually Violent Offender Registration Act enacted by the Campus Sex Crimes Prevention Act.

EFFECTIVE DATE: October 25, 2002.

FOR FURTHER INFORMATION CONTACT: C. Camille Cain, Deputy Director for Programs, Bureau of Justice Assistance, 810 Seventh Street NW, Washington, D.C. 20531. Telephone: (202) 514–6278. *E-mail: cainc@ojp.usdoj.gov.*

SUPPLEMENTARY INFORMATION: Section 170101 of the Violent Crime Control and Law Enforcement Act of 1994, Pub. L. 103–322, 108 Stat. 1796, 2038 (codified at 42 U.S.C. 14071) contains the Jacob Wetterling Crimes Against Children and Sexually Violent Offender Registration Act (the ''Wetterling Act''). The Wetterling Act sets minimum national standards for state sex offender registration and community notification programs, and directs the Attorney General to issue guidelines for such programs. The current Wetterling Act guidelines were published in the **Federal Register** at 64 FR 572 (Jan. 5, 1999), with corrections at 64 FR 3590 (Jan. 22, 1999). States that fail to comply with the Wetterling Act's requirements (as implemented and explained in the Attorney General's guidelines) are subject to a mandatory 10% reduction of the formula grant funding available under the Edward Byrne Memorial State and Local Law Enforcement Assistance Program (42 U.S.C. 3756), which is administered by the Bureau of Justice Assistance of the Department of Justice.

Subsequent to the publication of the current Wetterling Act guidelines, Congress amended the Wetterling Act in the Campus Sex Crimes Prevention Act (the ''CSCPA''), Pub. L. 106–386, div. B, § 1601, 114 Stat. 1464, 1537 (2000). The CSCPA provides special requirements relating to registration and community notification for sex offenders who are enrolled in or work at institutions of higher education. The CSCPA amendment to the Wetterling Act takes effect two years after its enactment date of October 28, 2000.

Supplementary guidelines are necessary to take account of the CSCPA amendment to the Wetterling Act. On March 8, 2002, the U.S. Department of Justice published Proposed Guidelines in the **Federal Register** (67 FR 10758) for that purpose.

Summary of Comments on the Proposed Guidelines

Following the publication of the Proposed Guidelines, the Department received several comments, all of which were carefully considered in finalizing the guidelines. A summary of the comments and responses to them are provided in the following paragraphs.

A. Availability of Information to the Campus Community

A number of comments noted that the Proposed Guidelines did not discuss the requirement under the CSCPA that information concerning the presence of registered sex offenders be made available to campus communities, and recommended that this requirement be articulated more clearly in the Final Guidelines. Comments to this effect were received from Senator Jon Kyl, the sponsor of the CSCPA, and from Daniel S. Carter, Senior Vice President of Security On Campus, Inc.

This issue was not addressed at length in the Proposed Guidelines because responsibility for implementation of the CSCPA is divided between the Attorney General and the Secretary of Education, and this issue relates to federal education law amendments that are within the purview of the Secretary of Education.

In part, the CSCPA added a new subsection to the Wetterling Act, 42 U.S.C. 14071(j), which requires states to obtain information concerning registrants' enrollment or employment at institutions of higher education, and to provide this information to campus police departments or other appropriate law enforcement agencies. The Attorney General is responsible for issuing guidelines relating to the Wetterling Act amendment of the CSCPA as part of his general responsibility for the issuance of guidelines under the Wetterling Act. *See* 42 U.S.C. 14071(a). The detailed discussion in the Proposed Guidelines was accordingly limited to the portions of the CSCPA that affect the Wetterling Act. The Proposed Guidelines explained: ''These guidelines relate solely to the provisions of the CSCPA that amended the Wetterling Act, and hence affect state eligibility for full Byrne Grant funding.''

The Proposed Guidelines, however, also noted: ''In addition to adding subsection (j) to the Wetterling Act, the CSCPA amended federal education laws to ensure the availability to the campus community of information concerning the presence of registered sex offenders.'' 67 FR at 10759. The Department of Education is responsible for the issuance of regulations relating to those laws.

The CSCPA's education law amendments include the addition of a new provision, section 485(f)(1)(I) of the Higher Education Act of 1965 (20 U.S.C. 1092(f)(1)(I)). This provision requires a statement advising the campus community where it can obtain the information identifying registered sex offenders who are enrolled or employed at the institution of higher education—information that the state is required to provide to the campus police department or other appropriate law enforcement agency pursuant to 42 U.S.C. 14071(j):

> (I) A statement advising the campus community where law enforcement agency information provided by a State under section 170101(j) of the Violent Crime Control and Law Enforcement Act of 1994 (42 U.S.C. 14071(j)), concerning registered sex offenders may be obtained, such as the law enforcement office of the institution, a local law enforcement agency with jurisdiction for the campus, or a computer network address.

In addition, the CSCPA added a provision to section 444(b) of the Family Educational Rights and Privacy Act of 1974 (20 U.S.C. 1232g(b)(7)(A)), which specifies that that Act does not prohibit educational institutions from disclosing information provided to them concerning registered sex offenders.

Thus, under the CSCPA's provisions, information identifying the registered sex offenders at an institution of higher education must be provided to the campus police department or other appropriate law enforcement agency, and the campus community must be advised where it can obtain this information. The net effect of these provisions is that information identifying the registered sex offenders at an institution of higher education must be made available to the campus community by some means, for otherwise it would be impossible to comply with the requirement that the campus community be advised where this information can be obtained. The CSCPA affords discretion concerning the specific means by which this information will be made available to the campus community, and indicates more specifically by way of illustration that permissible options would include making the information available at an appropriate law enforcement office, or making the information available online. *See* 20 U.S.C. 1092(f)(1)(I) (quoted above).

In addition to the special provisions of the CSCPA concerning the availability of sex offender information to campus communities, the general community notification provision of the Wetterling Act, 42 U.S.C. 14072(e)(2), applies to registered sex offenders who are enrolled or employed at institutions of higher education just as it applies to other registered sex offenders. Subsection (e)(2) requires that relevant information be released concerning registrants as necessary to protect the public. The Attorney General's guidelines for the Wetterling Act explain the meaning and application of this requirement. *See* 64 FR 572, 581–82.

B. Mandatory or Discretionary Character of the CSCPA's Standards

James Thomas, Executive Director of the Pennsylvania Commission on Crime and Delinquency, provided comments on behalf of the Commonwealth of Pennsylvania. In part, the comments suggested that the CSCPA does not require states to obtain information concerning registered sex offenders' enrollment or employment at institutions of higher education, or to provide such information to law enforcement agencies.

Pennsylvania's comments pointed out that 42 U.S.C. 14071(j)(1)(A) states that persons required to register shall provide notice relating to their enrollment or employment at institutions of higher education ''as required under State law,'' and that 42 U.S.C. 14071(j)(1)(B) provides that such persons shall report changes in their enrollment or employment status ''in the manner provided by State law.'' The comments interpreted these phrases to mean that the states have discretion under the CSCPA's standards as to whether they will impose such obligations on registrants at all. In support of this interpretation, the comments stated that other federal statutes uniformly use the phrase ''as required under State law'' in referring to pre-existing state duties—citing 12 U.S.C. 1813(m)(4); 15 U.S.C. 1612(d); 26 U.S.C. 832(b)(7)(E)—rather than with the intent to impose a new federal obligation on states. (Only one of the cited statutes uses the exact phrase ''as required under State law''; the other two use ''as required by State law.'') The comments also asserted that the phrase ''in the manner provided by State law'' is not used elsewhere in the United States Code.

However, the phrase ''in the manner provided by State law'' is used at an earlier point in the Wetterling Act itself, as part of a provision requiring change-of-address notice by registrants. Specifically, 42 U.S.C. 14071(b)(4) provides that a change of address by a person required to register under the Wetterling Act shall be reported by the person ''in the manner provided by State law,'' and that ''State procedures shall ensure'' that the updated address information is promptly made available to an appropriate law enforcement agency and entered into the appropriate state records or data system. This provision does not mean that states have discretion under the Wetterling Act's standards as to whether or not they will

require change of address notice by registrants, but only conveys state discretion as to the manner in which this notice will be effected—for example, specifying which particular agency or official must be given the notice. *See* 64 FR 572, 580 (explanation of 42 U.S.C. 14071(b)(4) in Attorney General's guidelines).

In parallel fashion, 42 U.S.C. 14071(j)(1)(B) provides that a change of enrollment or employment status shall be reported by the person ''in the manner provided by State law,'' and that ''State procedures shall ensure'' that the updated information is promptly made available to an appropriate law enforcement agency and entered into the appropriate state records or data system. The similarity of language evidences a similarity of legislative intent. Like 42 U.S.C. 14071(b)(4), 42 U.S.C. 14071(j)(1)(B) conveys state discretion concerning the particular manner in which changes in registration information will be reported, but does not convey discretion as to whether or not the reporting of such information will be required at all.

The other qualifying phrase noted in Pennsylvania's comments appears in 42 U.S.C. 14071(j)(1)(A), which says that, in addition to any other requirements of the Wetterling Act, a person who is required to register shall provide notice ''as required under State law'' concerning enrollment or employment at an institution of higher education in the state. In effect, the comments suggest that ''as required under State law'' should be read to mean: ''if required under State law.''

The phrase ''as required under State law'' does not appear verbatim elsewhere in the Wetterling Act, but a similar phrase—''as provided by State law''—appears in 42 U.S.C. 14071(b)(1)(A)(ii)–(iii). Section 14071(b)(1)(A)(ii)–(iii) requires state officials to advise registrants that if they change address, they must ''report the change of address as provided by State law.'' This phrase does not mean that registrants are to be told that they have an obligation to report a change of address only if the state, in its discretion, chooses to impose such an obligation by state law. Rather, ''as provided by State law'' in § 14071(b)(1)(A)(ii)–(iii) evidently has the same meaning as ''in the manner provided by State law'' in § 14071(b)(4), referring to the specification by state law of the particular manner in which change of address information is to be reported.

Similarly, the requirement under § 14071(j)(1)(A) that registrants are to provide notice ''as required under State law'' means that they are to provide notice in the manner required under state law, not if required under state law. The parallel usages elsewhere in the Wetterling Act are more persuasive on this point than the appearance of ''as required under [or by] State law'' in a few statutes (cited in Pennsylvania's comments) that use that phrase in entirely different contexts and that have no relationship to the Wetterling Act or its subject matter.

Beyond the foregoing textual points, the interpretation suggested in Pennsylvania's comments is clearly inconsistent with the understanding presented to Congress in its consideration of the CSCPA:

> The purpose of [the CSCPA] is to guarantee that, when a convicted sex offender enrolls or begins employment at a college or university, members of the campus community will have the information they need to protect themselves. . . . The Campus Sex Crimes Prevention Act provides that offenders must register the name of any higher education institution where they enroll as a student or commence employment. It also requires that this information be promptly made available to law enforcement agencies in the jurisdictions where the institutions of higher education are located. . . .
>
> In order to ensure that the information is readily accessible to the campus community, the Campus Sex Crimes Prevention Act requires colleges and universities to provide the campus community with clear guidance as to where this information can be found, and clarifies that federal laws governing the privacy of education records do not prevent campus security agencies or other administrators from disclosing such information.

146 Cong. Rec. S10216 (Oct. 11, 2000) (remarks of Senator Kyl).

In contrast, under the interpretation suggested in Pennsylvania's comments, the CSCPA would not guarantee that information concerning the presence of registered sex offenders at institutions of higher education is obtained by or made available to anyone, because the decision whether to collect such information would be left to the discretion of individual states.

In addition to the interpretive issues discussed above, the comments received from Pennsylvania expressed a number of concerns about the practical impact of the CSCPA amendment to the Wetterling Act. Specifically, the comments expressed concern that: (1) Requiring employment and schooling information from registrants will complicate the registration process and result in fewer offenders registering properly and providing the required notifications concerning changes; (2) legislation will be needed to effectively implement the new requirements; and (3) the new requirements will have a fiscal impact in a tight budgetary situation, including the expense of modifying the registration database to add the fields and logic necessary to store and process the new data, and additional staff for the State Police Megan's Law section because of increased workload. The comments stated that Pennsylvania had not had sufficient time to implement the proposed guidelines and requested an extension of the implementation deadline, or if that could not be effected, an extension of the effective date of the reduction of Byrne Grant funding in case of noncompliance.

In response, the Department of Justice notes that the requirement to obtain information from registrants concerning enrollment or employment at institutions of higher education, and to make this information available to appropriate law enforcement agencies, is integral to the CSCPA amendment to the Wetterling Act and cannot be changed by the guidelines. States have considerable latitude as to the particular procedures to be used in carrying out these requirements, and may adopt procedures consistent with the statute and guidelines that minimize resulting costs and burdens in the context of their registration systems. As with other provisions of the Wetterling Act, the Department provides advice and consultation to states on request concerning the consistency of measures they are considering to implement subsection (j) with the statute and the guidelines.

Under the original provisions of the Wetterling Act and most previous amendments, the legislation allowed states three years to come into compliance, and authorized the Attorney General to grant an additional two years to states that were making good faith efforts to come into compliance. *See* 64 FR at 572 (explanation of deadlines in Attorney General's guidelines). However, the CSCPA provides that its amendment to the Wetterling Act takes effect two years after enactment, and does not give the Attorney General authority to grant additional time. The Department is accordingly required to reduce by 10% any formula Byrne Grant award to a state made after October 27, 2002, if the state is not in compliance with the requirements of 42 U.S.C. 14071(j) at the time of the award. Since the deadline is statutory and not subject to extension by the Attorney General, any request for additional time would need to be addressed to Congress.

C. Comments From the American Council on Education

David Ward, President of the American Council on Education (ACE), sent a letter on behalf of the ACE expressing support for the proposed guidelines for the CSCPA amendment to the Wetterling Act. The letter advised that the ACE had worked with Senator Kyl and other members of Congress in developing the CSCPA so that community members at institutions of higher education could have access to information regarding registered sex offenders enrolled or employed at a particular college or university; that the ACE intended to offer more detailed comments to the Department of Education as it develops guidelines to ensure the availability of information concerning the presence of registered sex offenders; and that the proposed guidelines from the Department of Justice accurately and appropriately represent the intention of the law and that the ACE does not recommend any changes.

D. Comments From a Kansas Respondent

Tiffany Muller, Sexual Assault Advocacy Coordinator at the Kansas Coalition Against Sexual and Domestic Violence (hereafter, the ''Kansas Coalition''), submitted comments reflecting discussion of the CSCPA by a Sexual Assault Task Group made up of representatives from rape crisis centers and other interested agencies. The comments stated that the CSCPA was well received in Kansas, and that it provides a number of benefits, but that there were concerns about implementation and effectiveness in light of other current barriers. The specific concerns and suggestions were as follows:

1. Time for Registration in Interstate Situations

The comments from the Kansas Coalition asked how the duration of registration, and the related requirement to report attendance at a university, would be handled in situations involving multiple states with different registration periods—*e.g.*, a situation in which a person was initially registered in a state that requires registration for 10 years, but then attends a university in a neighboring state that requires registration for 15 years.

One type of situation this question covers is that in which a sex offender is convicted and initially registered in one state, but then changes his residence to another state and attends a university in the new state of residence. Under the standards of the CSCPA amendment to the Wetterling Act, the offender would be required to notify the new state of residence concerning his enrollment or employment at institutions of higher education in that state for however long he is required to register in that state. *See* 42 U.S.C. 14071(j) (''a person who is required to register in a State'' shall provide notice concerning enrollment or employment at an institution of higher education in that state).

A second type of situation the question may refer to is one in which a sex offender continues to reside in the state in which he is convicted and initially registered, but attends a university in another state. This situation falls under another provision of the Wetterling Act, 42 U.S.C. 14071(b)(7)(B), which relates to registration by a state of non-residents who are in the state for purposes of employment or school attendance. The state of employment or school attendance must accept registration information from such non-residents for as long as they are required to be registered in their states of residence under the Wetterling Act's standards. *See* 64 FR 572, 585 (explanation of subsection (b)(7)(B) in Attorney General's guidelines).

The question may also be seeking more general information about the Wetterling Act's requirements regarding the duration of registration in interstate situations. In general, the Wetterling Act's standards require registration of at least 10 years for offenders in the offense categories covered by the Act, and lifetime registration for certain types of offenders. *See* 42 U.S.C. 14071(b)(6); 64 FR 572, 576, 582–83, 584. These requirements apply regardless of whether the registrant moves from one state to another. If an offender who is subject only to the limited (ten-year) registration requirement of the Wetterling Act changes his state of residence, the new state of residence may give him credit towards satisfaction of the ten-year requirement based on the amount of time he was registered in the previous state of residence. *See* 64 FR 572, 578, 580. In all circumstances, states are free to require registration for longer periods than the minimum required under the Wetterling Act's standards. See 64 FR 572, 575.

2. Breakdown in Communication

The comments from the Kansas Coalition stated that in some cities a campus police department would have immediate jurisdiction over the campus, but often would not patrol some student housing, and that campus police in Kansas often do not share information with local police departments. The comments suggested that the concerns raised by this breakdown in communication might be addressed by notifying both the campus and local law enforcement.

On this point, the Proposed Guidelines, and the Final Guidelines below, make it clear that states are free to notify both a campus police department and other law enforcement agencies: ''Regardless of whether an institution of higher education has its own law enforcement unit, the Wetterling Act does not limit the discretion of states to make information concerning registrants enrolled or working at the institution available to other law enforcement agencies as well.''

3. Use of Pamphlets in Notification

The comments from the Kansas Coalition suggested that schools could distribute pamphlets to help notify people that information is available about such matters as crime rates and registered offenders at institutions of higher education.

This comment relates to the means of carrying out provisions of the Higher Education Act of 1965, including the CSCPA amendment to that Act (20 U.S.C. 1092(f)(1)(I)), rather than to the CSCPA amendment to the Wetterling Act.

4. Standardized Guidelines

The comments from the Kansas Coalition noted a suggestion that states should have more standardized sex offender registration guidelines.

On this point, it may be noted that the Wetterling Act, and the Attorney General's guidelines for the Wetterling Act, provide minimum national standards for state sex offender registration programs, and thereby establish a baseline of common features for the state programs.

5. Monitoring of Offenders

The comments from the Kansas Coalition expressed concern that it would be fairly easy for offenders to be without monitoring—especially those in a very transient college population—since updates come from the offenders themselves and states are only required to check in with registered offenders once a year.

The Wetterling Act's standards require annual address verification for registrants generally, but quarterly address verification for certain registrants. States are free to check or verify address information and other registration information with greater

frequency than the minimum required by the Wetterling Act. *See* 42 U.S.C. 14071(b)(3); 64 FR 572, 575, 581, 584.

6. Inaccurate Reporting

The comments from the Kansas Coalition stated that many campuses are not accurately reporting and continue to cover up incidences of sexual assault, and that these same campuses may be resistant to reporting registered offenders to the public.

This comment relates to compliance with provisions of the Higher Education Act of 1965, including the CSCPA amendment to that Act (20 U.S.C. 1092(f)(1)(I)), rather than to the CSCPA amendment to the Wetterling Act.

E. Comments From a Tennessee Respondent

Tim Burchett, a state senator in Tennessee, sent a letter stating that he had recently learned that the U.S. Department of Justice, in a brief filed with the Supreme Court, had articulated a requirement that campus sex offender notifications must be made categorically without regard to any risk assessment. Senator Burchett stated that he had sponsored the law in Tennessee designed to achieve compliance with the campus notification requirements of the CSCPA, and that he wanted to make sure that Tennessee's law will meet this new requirement.

Senator Burchett further stated that Tennessee will make categorical notifications on campus for all registrants after the Tennessee law's effective date of October 27, 2002, and that for convictions prior to that date release of the information is at the discretion of law enforcement. He asked whether this would meet the CSCPA's requirements, or whether further amendment of the law would be needed requiring categorical notifications without regard to conviction date. He also suggested that it would be very helpful if an explanation of the categorical notification requirement could be included in the Final Guidelines, so that states will know exactly what is needed for compliance.

In three briefs filed with the Supreme Court, the Department of Justice has noted the CSCPA's requirements relating to the availability to campus communities of information concerning the presence of registered sex offenders. *See* Brief for the United States as Amicus Curiae Supporting Petitioner, at 2–3, 10, in *Connecticut Department of Public Safety* v. *Doe,* No. 01–1231 (April 2002) (amicus brief supporting the granting of certiorari); Brief for the United States as Amicus Curiae Supporting Petitioners, at 2, 6, 22–23, in *Godfrey* v. *Doe,* No. 01–729 (June 2002) (amicus brief supporting petitioners on the merits); Brief for the United States as Amicus Curiae Supporting Petitioners, at 4–5, 27–28, in *Connecticut Department of Public Safety* v. *Doe,* No. 01–1231 (July 2002) (amicus brief supporting petitioners on the merits). These requirements are categorical in that information must be made available to a campus community concerning the identities of all registered sex offenders who are enrolled or employed at the institution of higher education. As explained above, this follows from the requirement of 42 U.S.C. 14071(j) that information identifying all registrants at an institution of higher education must be provided to the campus police department or other appropriate law enforcement agency, together with the requirement of 20 U.S.C. 1092(f)(1)(I) that the campus community must be told where it can obtain this information.

The Wetterling Act's requirements generally apply to registrants who are convicted at any time after a state's establishment of a registration system that conforms to these requirements. Hence, a state must at a minimum apply the requirements of 42 U.S.C. 14071(j) to all persons registered on the basis of convictions occurring after the effective date of state legislation that implements the requirements of 42 U.S.C. 14071(j) in the state's registration system. States are also free to apply the requirements of 42 U.S.C. 14071(j) more broadly to persons registered on the basis of convictions occurring before the enactment or effectiveness of such state legislation. *See* 64 FR 572, 575, 581, 583.

Final Guidelines

The Campus Sex Crimes Prevention Act (CSCPA) provisions appear in subsection (j) of the Wetterling Act (42 U.S.C. 14071(j)). As provided in subsection (j), any person required to register under a state sex offender registration program must notify the state concerning each institution of higher education (*i.e.*, post-secondary school) in the state at which the person is a student or works, and of each change in enrollment or employment status of the person at such an institution. States can comply with the Wetterling Act's requirements concerning these registrants, in part, by: (1) Advising registrants concerning these specific obligations when they are generally advised of their registration obligations, as discussed in part II.A of the January 5, 1999, Wetterling Act guidelines (64 FR 572, 579), (2) including in the registration information obtained from each registrant information concerning any enrollment or employment at an institution of higher education in the state, and (3) establishing procedures for registrants to notify the state concerning any subsequent commencement or termination of enrollment or employment at an institution of higher education in the state. The failure of a registrant to notify the state concerning enrollment or employment at an institution of higher education or the termination of such enrollment or employment would constitute a failure to register or keep such registration current for purposes of subsection (d) of the Wetterling Act (42 U.S.C. 14071(d)), and must be subject to criminal penalties as provided in that subsection.

Under the requirements of subsection (j) of the Wetterling Act, state procedures must also ensure that information concerning a registrant enrolled or working at an institution of higher education is promptly made available to a law enforcement agency having jurisdiction where the institution is located, and entered into the appropriate state records or data system. This requirement applies both to any information initially obtained from registrants concerning enrollment or employment at institutions of higher education in the state, and information concerning subsequent changes in such enrollment or employment status. As paragraph (3) of subsection (j) makes clear, subsection (j) does not place any burden on an educational institution to request information about registrants enrolled or employed at the institution from the state, and the requirement that the state make the information available to a law enforcement agency having jurisdiction where the institution is located is not contingent on a request from the institution.

Subsection (j)'s requirement to promptly make the information available to a law enforcement agency having jurisdiction where the institution is located is supplementary to the requirement under subsection (b)(2)(A) and (4) of the Wetterling Act (42 U.S.C. 14071(b)(2)(A), (4)) to promptly make information concerning registrants available to a law enforcement agency having jurisdiction where the registrant resides. The legislative history of the CSCPA explains subsection (j)'s requirement as follows:

> Once information about an offender's enrollment * * * or employment * * * [at] * * * an institution of higher education has been provided to a state's sex offender registration program, that information should

be shared with that school's law enforcement unit as soon as possible.

The reason for this is simple. An institution's law enforcement unit will have the most direct responsibility for protecting that school's community and daily contact with those that should be informed about the presence of the convicted offender.

If an institution does not have a campus police department, or other form of state recognized law enforcement agency, the sex offender information could then be shared with a local law enforcement agency having primary jurisdiction for the campus.

146 Cong. Rec. S10216 (Oct. 11, 2000) (remarks of Senator Kyl).

Thus, if an institution of higher education has a campus police department or other form of state recognized law enforcement agency, state procedures must ensure that information concerning the enrollment or employment of registrants at that institution (and subsequent changes in registrants' enrollment or employment status) is promptly made available to the campus police department or law enforcement agency. If there is no such department or agency at the institution, then state procedures must ensure that this information is promptly made available to some other law enforcement agency having jurisdiction where the institution is located. Regardless of whether an institution of higher education has its own law enforcement unit, the Wetterling Act does not limit the discretion of states to make information concerning registrants enrolled or working at the institution available to other law enforcement agencies as well.

The language of subsection (j) refers specifically to any registrant who ''is employed, carries on a vocation, or is a student'' at an institution of higher education in the state. These terms have defined meanings set forth in subsection (a)(3)(F)–(G) of the Wetterling Act (42 U.S.C. 14071(a)(3)(F)–(G)). In light of these definitions, the registrants to whom the requirements of subsection (j) apply are those who: (1) are enrolled in any institution of higher education in the state on a full-time or part-time basis, or (2) have any sort of full-time or part-time employment at an institution of higher education in the state, with or without compensation, for more than 14 days, or for an aggregate period exceeding thirty days in a calendar year.

The CSCPA provisions in subsection (j) of the Wetterling Act are supplementary to, and do not limit or supersede, the provisions in subsection (b)(7)(B) of the Wetterling Act that require states to accept registration information from offenders who reside outside a state but come into the state in order to work or attend school. Subsection (b)(7)(B) applies only to non-resident workers and students, but it is not limited in scope to those who work at or attend institutions of higher education (as opposed to other places of employment or schools). The requirements under subsection (b)(7)(B) are explained in part V.B.2 of the January 5, 1999, Wetterling Act guidelines (64 FR 572, 585).

The CSCPA's effective date for its amendment to the Wetterling Act is two years after enactment. Hence, following October 27, 2002, Byrne Formula Grant awards to states that are not in compliance with subsection (j) of the Wetterling Act will be subject to a mandatory 10% reduction. If a state's funding is reduced because of a failure to comply with the CSCPA amendment to the Wetterling Act or other Wetterling Act requirements by an applicable deadline, the state may regain eligibility for full funding thereafter by establishing compliance with all applicable requirements of the Wetterling Act. States are encouraged to submit information concerning existing and proposed sex offender registration provisions relating to compliance with the CSCPA amendment as soon as possible.

After the reviewing authority has determined that a state is in compliance with the Wetterling Act, the state has a continuing obligation to maintain its system's consistency with the Wetterling Act's standards, and will be required as part of the Byrne Formula Grant application process in subsequent program years to certify that the state remains in compliance with the Wetterling Act.

These guidelines relate solely to the provisions of the CSCPA that amended the Wetterling Act, and hence affect state eligibility for full Byrne Grant funding. In addition to adding subsection (j) to the Wetterling Act, the CSCPA amended federal education laws to ensure the availability to the campus community of information concerning the presence of registered sex offenders. The Department of Education is responsible for the issuance of regulations relating to those laws.

As noted above, the general guidelines for the Wetterling Act were published on January 5, 1999, and appear at 64 FR 572, with corrections at 64 FR 3590 (Jan. 22, 1999). The new CSCPA provisions in subsection (j), which these supplementary guidelines address, are only one part of the Wetterling Act. States must comply with all of the Wetterling Act's requirements in order to maintain eligibility for full Byrne Grant funding.

Dated: October 22, 2002.

Larry D. Thompson,

Acting Attorney General.

[FR Doc. 02–27257 Filed 10–24–02; 8:45 am]

BILLING CODE 4410–19–P

DEPARTMENT OF JUSTICE

Antitrust Division

Notice Pursuant to the National Cooperative Research and Production Act of 1993—Ethernet in the First Mile Alliance

Notice is hereby given that, on September 3, 2002, pursuant to section 6(a) of the National Cooperative Research and Production Act of 1993, 15 U.S.C. 4301 *et seq.* (''the Act''), Ethernet in the First Mile Alliance (''EFMA'') has filed written notifications simultaneously with the Attorney General and the Federal Trade Commission disclosing changes in its membership status. The notifications were filed for the purpose of extending the Act's provisions limiting the recovery of antitrust plaintiffs to actual damages under specified circumstances. Specifically, Analog Devices, Norwood, MA; Broadcom, Irvine, CA; Harmonic, Inc., Sunnyvale, CA; National Semiconductor, Santa Clara, CA; and Panasonic Semiconductor Dev. Co., San Jose, CA have been added as parties to this venture.

No other changes have been made in either the membership or planned activity of the group research project. Membership in this group research project remains open, and EFMA intends to file additional written notifications disclosing all changes in membership.

On January 16, 2002, EFMA filed its original notification pursuant to section 6(a) of the Act. The Department of Justice published a notice in the **Federal Register** pursuant to Section 6(b) of the Act on March 8, 2002 (67 FR 10760).

The last notification was filed with the Department on April 17, 2002. A notice was published in the **Federal Register** pursuant to section 6(b) of the Act on June 18, 2002 (67 FR 41482).

Constance K. Robinson,

Director of Operations, Antitrust Division.

[FR Doc. 02–27221 Filed 10–24–02; 8:45 am]

BILLING CODE 4410–11–M

DEPARTMENT OF JUSTICE

Drug Enforcement Administration

Manufacturer of Controlled Substances; Notice of Application

Pursuant to Section 1301.33(a) of Title 21 of the Code of Federal Regulations (CFR), this is notice that on October 17, 2002, Polaroid Corporation, 1265 Main Street, Building W6, Waltham, Massachusetts 02454, made application to the Drug Enforcement Administration (DEA) for registration as a bulk manufacturer of 2,5-dimethoxyamphetamine (7396), a basic class of controlled substance listed in Schedule I.

The firm plans to manufacture bulk 2,5-dimethoxyamphetamine for conversion into a non-controlled substance.

Any other such applicant and any person who is presently registered with DEA to manufacture such substance may file comments or objections to the issuance of the proposed registration.

Any such comments or objections may be addressed, in quintuplicate, to the Deputy Assistant Administrator, Office of Diversion Control, Drug Enforcement Administration, United States Department of Justice, Washington, DC 20537, Attention: DEA Federal Register Representative (CCR), and must be filed no later than December 24, 2002.

Dated: October 21, 2002.

Laura M. Nagel,

Deputy Assistant Administrator, Office of Diversion Control, Drug Enforcement Administration.

[FR Doc. 02–27180 Filed 10–24–02; 8:45 am]

BILLING CODE 4410–04–M

DEPARTMENT OF JUSTICE

Drug Enforcement Administration

Manufacturer of Controlled Substances; Notice of Application

Pursuant to Section 1301.33(a) of Title 21 of the Code of Federal Regulations (CFR), this is notice that on June 4, 2002, Rhodes Technologies, 498 Washington Street, Coventry, Rhode Island 02816, made application by letter to the Drug Enforcement Administration (DEA) for registration as a bulk manufacturer of the basic classes of controlled substances listed below:

Drug	Schedule
Tetrahydrocannabinols (7370)	I
Dihydrocodeine (9120)	II
Hydromorphone (9150)	II
Hydrocodone (9193)	II
Noroxymorphone (9668)	II
Fentanyl (9801)	II

The firm plans to produce bulk product for conversion and distribution to its customers.

Any other such applicant and any person who is presently registered with DEA to manufacture such substances may file comments or objections to the issuance of the proposed registration.

Any such comments or objections may be addressed, in quintuplicate, to the Deputy Assistant Administrator, Office of Diversion Control, Drug Enforcement Administration, United States Department of Justice, Washington, DC 20537, Attention: DEA Federal Register Representative (CCR), and must be filed no later than December 24, 2002.

Dated: October 21, 2002.

Laura M. Nagel,

Deputy Assistant Administrator, Office of Diversion Control, Drug Enforcement Administration.

[FR Doc. 02–27181 Filed 10–24–02; 8:45 am]

BILLING CODE 4410–09–M

DEPARTMENT OF LABOR

Employment and Training Administration

Proposed Collection; Comment Request

ACTION: Notice.

SUMMARY: The Department of Labor, as part of its continuing effort to reduce paperwork and respondent burden conducts a preclearance consultation program to provide the general public and Federal agencies with an opportunity to comment on proposed and/or continuing collections of information in accordance with the Paperwork Reduction Act of 1995 (PRA95) [44 U.S.C. 3506(c)(2)(A)]. This program helps to ensure that requested data can be provided in the desired format, reporting burden (time and financial resources) is minimized, collection instruments are clearly understood, and the impact of collection requirements on respondents can be properly assessed. Currently, the Employment and Training Administration is soliciting comments concerning the proposed revision of data collections using Form ETA 563, Quarterly Determinations, Allowance Activities, and Employability Services Under the Trade Act (1205–0016 expires 12/02), and reinstatement Form ETA 9027 (1205–0016 expired 11/90), Training Waivers Issued and Revoked.

A copy of the proposed information collection request (ICR) can be obtained by contacting the office listed below in the addressee section of this notice.

DATES: Written comments must be submitted to the office listed in the addressee section below on or before December 24, 2002.

ADDRESSES: Erin L. FitzGerald, Program Analyst, Division of Trade Adjustment Assistance, Room C–5311, 200 Constitution Ave., NW., Washington, DC 20210. Phone (202) 693–3506 (this is not a toll-free number), fax (202) 693–3584, e-mail *efitzgerald@doleta.gov.*

SUPPLEMENTARY INFORMATION:

I. Background

The Trade Act of 1974, Section 236(d), as amended, requires the President to submit an annual report to the Congress on the trade agreements program, which includes information on trade adjustment assistance for workers. Furthermore, key workload data on the Trade Adjustment Assistance (TAA) and North American Free Trade Agreement-Transitional Adjustment Assistance (NAFTA–TAA) programs are needed to allocate program and administrative funds to State agencies administering the program for the Secretary. The Trade Adjustment Assistance Reform Act of 2002 amended the Trade Act of 1974. This revision to the ETA 563 (1205–0016 expires 12/02) incorporates changes necessary to accurately reflect the 2002 amendments.

The Trade Act of 1974, Section 231(a)(5)(A), as amended by the Trade Adjustment Assistance Reform Act of 2002, requires participants to be enrolled in training within 16 weeks of their most recent qualifying separation or 8 weeks of the certification covering the worker in order to receive income support. The Trade Act as amended, Section 231(c), allows the enrollment in training requirement to be waived, and provides 6 specific criteria for issuing waivers. Allowable reasons for waiving the training requirement include the worker is expected to be recalled, the worker possesses marketable skills, the worker is within 2 years of retirement, the worker is in poor health, enrollment is not available, and training is not available. The statute requires the State agencies administering the Trade Adjustment Assistance (TAA) program for the Secretary to report to the Secretary on training waivers issued and revoked. The data collected in the reinstated and revised ETA 9027 (1205–0016 expired 11/90) will serve as that

report and will also be used in the Secretary's annual report to Congress on training waivers issued and revoked.

II. Review Focus

The Department of Labor is particularly interested in comments which:

- Evaluate whether the proposed collection of information is necessary for the proper performance of the functions of the agency, including whether the information will have practical utility;
- evaluate the accuracy of the agency's estimate of the burden of the proposed collection of information, including the validity of the methodology and assumptions used;
- enhance the quality, utility, and clarity of the information to be collected; and
- minimize the burden of the collection of information on those who are to respond, including through the use of appropriate automated, electronic, mechanical, or other technological collection techniques or other forms of information technology, *e.g.*, permitting electronic submissions of responses.

III. Current Actions

This is a notice of proposed revision of collection of information currently approved by OMB (ETA 563, 1205–0016 expires 12/02) and proposed reinstatement with changes of a collection of information previously approved by OMB (ETA 9027, 1205–0016 expired 11/90). This revision of the ETA 563 incorporates amendments in benefit eligibility set forth in the Trade Adjustment Assistance Reform Act of 2002, reduces the burden hours, and eliminates data elements duplicated in the Trade Act Participant Report (TAPR) (1205–0392, expires 2/04). The reinstatement with changes of the ETA 9027 complies with amendments in waiver eligibility and required reporting set forth in the Trade Adjustment Assistance Reform Act of 2002.

Type of Review: Revision.

Agency: Employment and Training Administration.

Title: Quarterly Determinations, Allowance Activities, and Employability Services Under the Trade Act; Training Waivers Issued and Revoked.

OMB Number: 1205–0016.

Recordkeeping: 2 years.

Affected Public: State or Local Government.

Cite/reference	Total respondents	Frequency	Total responses	Average time per response	Burden
ETA 563	52	Quarterly	17,100	8 minutes	2,223 hours.
ETA 9027	52	Quarterly	180	15 minutes	45 hours.
Combined Reprogramming burden	52	One time		Minimal	Minimal.
Totals			17,280		2,268 hours.

Total Burden Cost (capital/startup): $100,000.

Total Burden Cost (operating/maintaining): 0.

Comments submitted in response to this comment request will be summarized and/or included in the request for Office of Management and Budget approval of the information collection request; they will also become a matter of public record.

Dated: October 22, 2002.

Edward A. Tomchick,

Director, Division of Trade Adjustment Assistance.

[FR Doc. 02–27211 Filed 10–24–02; 8:45 am]

BILLING CODE 4510–30–P

DEPARTMENT OF LABOR

Employment Standards Administration

Proposed Collection; Comment Request

ACTION: Notice.

SUMMARY: The Department of Labor, as part of its continuing effort to reduce paperwork and respondent burden, conducts a preclearance consultation program to provide the general public and Federal agencies with an opportunity to comment on proposed and/or continuing collections of information in accordance with the Paperwork Reduction Act of 1995 (PRA95) [44 U.S.C. 3506(c)(2)(A)]. This program helps to ensure that requested data can be provided in the desired format, reporting burden (time and financial resources) is minimized, collection instruments are clearly understood, and the impact of collection requirements on respondents can be properly assessed. Currently, the Employment Standards Administration is soliciting comments concerning two proposed information collections of the Office of Workers' Compensation Programs (OWCP), Division of Longshore and Harbor Workers' Compensation (DLSHWC): ''Payment of Compensation Without Award'' (LS–206); and ''Notice of Controversion of Right to Compensation'' (LS–207). Copies of the proposed information collection requests can be obtained by contacting the office listed below in the addresses section of this Notice.

DATES: Written comments must be submitted to the office listed in the addresses section below on or before December 24, 2002.

ADDRESSES: Ms. Patricia A. Forkel, U.S. Department of Labor, 200 Constitution Ave., NW., Room S–3201, Washington, DC 20210, telephone (202) 693–0339, fax (202) 693–1451, e-mail *pforkel@fenix2.dol-esa.gov*. Please use only one method of transmission for comments (mail, fax, or e-mail).

SUPPLEMENTARY INFORMATION:

I. Background

The Office of Workers' Compensation Programs administers the Longshore and Harbor Workers' Compensation Act (LHWCA). The Act provides benefits to workers injured in maritime employment on the navigable waters of the United States or in an adjoining area customarily used by an employee in loading, unloading, repairing, or building a vessel. Under Sections 14(b) and (c) of the Act, a self-insured employer or insurance carrier is required to pay compensation within 14 days after the employer has knowledge of the injury or death of the employee. Upon making the first payment, the employer or carrier shall immediately notify the Longshore district director of the payment. Form LS–206 has been designated as the proper form on which report of first payment is to be made.

Pursuant to section 14(d) of the Act, if an employer controverts the right to compensation, he/she shall file with the Longshore deputy commissioner in the affected compensation district on or before the fourteenth day after he/she has knowledge of an alleged injury or death, a notice, in accordance with a form prescribed by the Secretary of Labor, stating that the right to compensation is controverted. The LS–207 is used for this purpose. These

information collections are currently approved for use through February 28, 2003.

II. Review Focus

The Department of Labor is particularly interested in comments which:

* Evaluate whether the proposed collection of information is necessary for the proper performance of the functions of the agency, including whether the information will have practical utility;

* evaluate the accuracy of the agency's estimate of the burden of the proposed collection of information, including the validity of the methodology and assumptions used;

* enhance the quality, utility and clarity of the information to be collected; and

* minimize the burden of the collection of information on those who are to respond, including through the use of appropriate automated, electronic, mechanical, or other technological collection techniques or other forms of information technology, *e.g.*, permitting electronic submissions of responses.

III. Current Actions

The Department of Labor seeks the extension of approval to collect this information in order to carry out its responsibility to meet the statutory requirements to provide compensation or death benefits under the Act to workers covered under the Act. There is no change in the substance or method of collection since the last OMB approval.

Type of Review: Extension.

Agency: Employment Standards Administration.

Title: Payment of Compensation Without Award.

OMB Number: 1215–0022.

Agency Number: LS–206.

Affected Public: Business or other for-profit.

Total Respondents: 900.

Total Responses: 26,100.

Frequency: On occasion.

Estimated Total Burden Hours: 6,525.

Total Burden Cost (capital/startup): $0.

Total Burden Cost (operating/maintenance): $10,440.

Type of Review: Extension.

Agency: Employment Standards Administration.

Title: Notice of Controversion of Right to Compensation.

OMB Number: 1215–0023.

Agency Number: LS–207.

Affected Public: Business or other for-profit.

Total Respondents: 900.

Total Responses: 18,900.

Frequency: On occasion.

Estimated Total Burden Hours: 4,725.

Total Burden Cost (capital/startup): $0.

Total Burden Cost (operating/maintenance): $7,985.25.

Comments submitted in response to this notice will be summarized and/or included in the request for Office of Management and Budget approval of the information collection request; they will also become a matter of public record.

Dated: October 21, 2002.

Margaret J. Sherrill,

Chief, Branch of Management Review and Internal Control, Division of Financial Management, Office of Management, Administration and Planning, Employment Standards Administration.

[FR Doc. 02–27209 Filed 10–24–02; 8:45 am]

BILLING CODE 4510–CF–P

DEPARTMENT OF LABOR

Employment Standards Administration

Proposed Collection; Comment Request

ACTION: Notice.

SUMMARY: The Department of Labor, as part of its continuing effort to reduce paperwork and respondent burden, conducts a preclearance consultation program to provide the general public and Federal agencies with an opportunity to comment on proposed and/or continuing collections of information in accordance with the Paperwork Reduction Act of 1995 (PRA95) [44 U.S.C. 3506(c)(2)(A)]. This program helps to ensure that requested data can be provided in the desired format, reporting burden (time and financial resources) is minimized, collection instruments are clearly understood, and the impact of collection requirements on respondents can be properly assessed. Currently, the Employment Standards Administration is soliciting comments concerning the proposed collection: ''Notice of Final Payment or Suspension of Compensation Benefits'' (LS–208). A copy of the proposed information collection request can be obtained by contacting the office listed below in the **ADDRESSES** section of this Notice.

DATES: Written comments must be submitted to the office listed in the **ADDRESSES** section below on or before December 24, 2002.

ADDRESSES: Ms. Patricia A. Forkel, U.S. Department of Labor, 200 Constitution Ave., NW., Room S–3201, Washington, DC 20210, telephone (202) 693–0339, fax (202) 693–1451, e-mail *pforkel@fenix2.dol-esa.gov*. Please use only one method of transmission for comments (mail, fax, or e-mail).

SUPPLEMENTARY INFORMATION

I. Background

The Office of Workers' Compensation Programs (OWCP) administers the Longshore and Harbor Workers' Compensation Act (LHWCA). The Act provides benefits to workers injured in maritime employment on the navigable waters of the United States or in an adjoining area customarily used by an employee in loading, unloading, repairing, or building a vessel. Under section 14(g) of the Act, the employer or the employer's insurance carrier must file a report of the compensation paid to a claimant at the time final payment is made. The Act requires that the form must be filed within sixteen days of the final payment of compensation with the District Director in the compensation district in which the injury occurred. This information collection is currently approved for use through April 30, 2003.

II. Review Focus

The Department of Labor is particularly interested in comments which:

* Evaluate whether the proposed collection of information is necessary for the proper performance of the functions of the agency, including whether the information will have practical utility;

* Evaluate the accuracy of the agency's estimate of the burden of the proposed collection of information, including the validity of the methodology and assumptions used;

* Enhance the quality, utility and clarity of the information to be collected; and

* Minimize the burden of the collection of information on those who are to respond, including through the use of appropriate automated, electronic, mechanical, or other technological collection techniques or other forms of information technology, *e.g.*, permitting electronic submissions of responses.

III. Current Actions

The Department of Labor seeks the extension of approval to collect this information in order to carry out its responsibility to notify OWCP district offices that payment of compensation benefits has been stopped or suspended in a case. The report is required by law. The report is necessary for OWCP to determine whether benefits have been

suspended in a case and to effectively manage the case file and verify that the injured worker has received all benefits to which he/she is entitled under the Act. There is no change in the substance or method of collection since the last OMB approval.

Type of Review: Extension.

Agency: Employment Standards Administration.

Title: Notice of Final Payment or Suspension of Compensation Benefits.

OMB Number: 1215–0024.

Agency Number: LS–208.

Affected Public: Business or other for-profit.

Total Respondents: 500.

Total Responses: 18,950.

Frequency: On occasion.

Estimated Total Burden Hours: 4,738.

Total Burden Cost (capital/startup): $0.

Total Burden Cost (operating/maintenance): $10,890.

Comments submitted in response to this notice will be summarized and/or included in the request for Office of Management and Budget approval of the information collection request; they will also become a matter of public record.

Dated: October 21, 2002.

Margaret J. Sherrill,

Chief, Branch of Management Review and Internal Control, Division of Financial Management, Office of Management, Administration and Planning, Employment Standards Administration.

[FR Doc. 02–27210 Filed 10–24–02; 8:45 am]

BILLING CODE 4510–CF–P

DEPARTMENT OF LABOR

Employment Standards Administration Wage and Hour Division

Minimum Wages for Federal and Federally Assisted Construction; General Wage Determination Decisions

General wage determination decisions of the Secretary of Labor are issued in accordance with applicable law and are based on the information obtained by the Department of Labor from its study of local wage conditions and data made available from other sources. They specify the basic hourly wage rates and fringe benefits which are determined to be prevailing for the described classes of laborers and mechanics employed on construction projects of a similar character and in the localities specified therein.

The determinations in these decisions of prevailing rates and fringe benefits have been made in accordance with 29 CFR part 1, by authority of the Secretary of Labor pursuant to the provisions of the Davis-Bacon Act of March 3, 1931, as amended (46 Stat. 1494, as amended, 40 U.S.C. 276a) and of other Federal statutes referred to in 29 CFR part 1, Appendix, as well as such additional statutes as may from time to time be enacted containing provisions for the payment of wages determined to be prevailing by the Secretary of Labor in accordance with the Davis-Bacon Act. The prevailing rates and fringe benefits determined in these decisions shall, in accordance with the provisions of the foregoing statutes, constitute the minimum wages payable on Federal and federally assisted construction projects to laborers and mechanics of the specified classes engaged on contract work of the character and in the localities described therein.

Good cause is hereby found for not utilizing notice and public comment procedure thereon prior to the issuance of these determinations as prescribed in 5 U.S.C. 553 and not providing for delay in the effective date as prescribed in that section, because the necessity to issue current construction industry wage determinations frequently and in large volumes causes procedures to be impractical and contrary to the public interest.

General wage determination decisions, and modifications and supersedes decisions thereto, contain no expiration dates and are effective from their date of notice in the **Federal Register**, or on the date written notice is received by the agency, whichever is earlier. These decisions are to be used in accordance with the provisions of 29 CFR parts 1 and 5. Accordingly, the applicable decision, together with any modifications issued, must be made a part of every contract for performance of the described work within the geographic area indicated as required by an applicable Federal prevailing wage law and 29 CFR part 5. The wage rates and fringe benefits, notice of which is published herein, and which are contained in the Government Printing Office (GPO) document entitled ''General Wage Determinations Issued Under The Davis-Bacon And Related Acts,'' shall be the minimum paid by contractors and subcontractors to laborers and mechanics.

Any person, organization, or governmental agency having an interest in the rates determined as prevailing is encouraged to submit wage rate and fringe benefit information for consideration by the Department.

Further information and self-explanatory forms for the purpose of submitting this data may be obtained by writing to the U.S. Department of Labor, Employment Standards Administration, Wage and Hour Division, Division of Wage Determinations, 200 Constitution Avenue, NW., Room S–3014, Washington, DC 20210.

Modification to General Wage Determination Decisions

The number of the decisions listed to the Government Printing Office document entitled ''General Wage Determinations Issued Under the Davis-Bacon and related Acts'' being modified are listed by Volume and State. Dates of publication in the **Federal Register** are in parentheses following the decisions being modified.

Volume I

Massachusetts
MA020016 (Mar. 1, 2002)
Maine
ME020012 (Mar. 1, 2002)
Rhode Island
RI020005 (Mar. 1, 2002)

Volume II

Pennsylvania
PA020004 (Mar. 1, 2002)
PA020005 (Mar. 1, 2002)
PA020007 (Mar. 1, 2002)
PA020008 (Mar. 1, 2002)
PA020010 (Mar. 1, 2002)
PA020012 (Mar. 1, 2002)
PA020014 (Mar. 1, 2002)
PA020015 (Mar. 1, 2002)
PA020016 (Mar. 1, 2002)
PA020019 (Mar. 1, 2002)
PA020020 (Mar. 1, 2002)
PA020023 (Mar. 1, 2002)
PA020024 (Mar. 1, 2002)
PA020025 (Mar. 1, 2002)
PA020026 (Mar. 1, 2002)
PA020031 (Mar. 1, 2002)
PA020040 (Mar. 1, 2002)
PA020042 (Mar. 1, 2002)
PA020050 (Mar. 1, 2002)
PA020061 (Mar. 1, 2002)

Volume III

None

Volume IV

Illinois
IL020002 (Mar. 1, 2002)
IL020006 (Mar. 1, 2002)
IL020008 (Mar. 1, 2002)
IL020009 (Mar. 1, 2002)
IL020011 (Mar. 1, 2002)
IL020026 (Mar. 1, 2002)

Volume V

Iowa
IA020013 (Mar. 1, 2002)

Volume VI

None

Volume VII

California
CA020001 (Mar. 1, 2002)
CA020002 (Mar. 1, 2002)
CA020004 (Mar. 1, 2002)
CA020009 (Mar. 1, 2002)
CA020019 (Mar. 1, 2002)
CA020023 (Mar. 1, 2002)

CA020025 (Mar. 1, 2002)
CA020028 (Mar. 1, 2002)
CA020029 (Mar. 1, 2002)
CA020030 (Mar. 1, 2002)
CA020031 (Mar. 1, 2002)
CA020032 (Mar. 1, 2002)
CA020033 (Mar. 1, 2002)
CA020035 (Mar. 1, 2002)
CA020036 (Mar. 1, 2002)
CA020037 (Mar. 1, 2002)

General Wage Determination Publication

General wage determinations issued under the Davis-Bacon and related Acts, including those noted above, may be found in the Government Printing Office (GPO) document entitled ''General Wage determinations Issued Under the Davis-Bacon And Related Acts''. This publication is available at each of the 50 Regional Government Depository Libraries and many of the 1,400 Government Depository Libraries across the country.

General wage determinations issued under the Davis-Bacon and related Acts are available electronically at no cost on the Government Printing Office site at *http://www.access.gpo.gov/davisbacon*. They are also available electronically by subscription to the Davis-Bacon Online Service *(http://davisbacon, fedworld.gov*) of the National Technical Information Service (NTIS) of the U.S. Department of Commerce at 1–800–363–2068. This subscription offers value-added features such as electronic delivery of modified wage decisions directly to the user's desktop, the ability to access prior wage decisions issued during the year, extensive Help desk Support, etc.

Hard-copy subscriptions may be purchased from: Superintendent of Documents, U.S. Government Printing Office, Washington, DC 20402, (202) 512–1800.

When ordering hard-copy subscription(s), be sure to specify the State(s) of interest, since subscriptions may be ordered for any Subscriptions include an annual edition (issued in January or February) which includes all current general wage determinations for the States covered by each volume. Throughout the remainder of the year, regular weekly updates will be distributed to subscribers.

Signed at Washington, DC This 17th Day of October 2002.

Terry Sullivan,

Acting Chief, Branch of Construction Wage Determinations.

[FR Doc. 02–26921 Filed 10–24–02; 8:45 am]

BILLING CODE 4510–27–M

LEGAL SERVICES CORPORATION

Notice of Intent To Award—Grant Awards for the Provision of Civil Legal Services to Eligible Low-Income Clients, for Service Areas in Michigan, Beginning January 1, 2003

AGENCY: Legal Services Corporation.

ACTION: Announcement of intention to make FY 2003 Competitive Grant Awards.

SUMMARY: The Legal Services Corporation (LSC) hereby announces its intention to award grants and contracts to provide economical and effective delivery of high quality civil legal services to eligible low-income clients, for service areas in Michigan, beginning January 1, 2003.

DATES: All comments and recommendations must be received on or before the close of business on November 25, 2002.

ADDRESSES: Legal Services Corporation—Competitive Grants, Legal Services Corporation, 750 First Street NE., 10th Floor, Washington, DC 20002–4250.

FOR FURTHER INFORMATION CONTACT: Reginald Haley, Office of Program Performance, (202) 336–8827.

SUPPLEMENTARY INFORMATION: Pursuant to LSC's announcement of funding availability on August 22, 2002 (67 FR 54495), LSC will award funds to one or more of the following organizations to provide civil legal services in the indicated service areas. Funding amounts shown are based on the 2000 census data as discussed in LSC Program Letter 02–8. Amounts are subject to change.

State & service area	Applicant name	Anticipated FY 2003 award
Michigan:		
MI–9	Legal Services of Northern Michigan, Inc	$ 648,993
MI–12	Legal Services of South Central Michigan, Inc	1,169,064
MI–13	Legal Aid and Defender Association, Inc	3,507,603
MI–14	Lakeshore Legal Aid	1,261,424
MI–14	Legal Services of Eastern Michigan	1,261,424
MI–15	Western Michigan Legal Services	1,518,531
MMI	Legal Services of South Central Michigan, Inc	441,801
NMI–1	Michigan Indian Legal Services, Inc	149,078

These grants and contracts will be awarded under the authority conferred on LSC by the Legal Services Corporation Act, as amended (42 U.S.C. 2996e(a)(1)). Awards will be made so that each service area is served, although none of the listed organizations are guaranteed an award or contract. This public notice is issued pursuant to the LSC Act (42 U.S.C. 2996f(f)), with a request for comments and recommendations concerning the potential grantees within a period of 30 days from the date of publication of this notice. Grants will become effective and grant funds will be distributed on or about January 1, 2003.

Dated: October 21, 2002.

Michael A. Genz,

Director, Office of Program Performance, Legal Services Corporation.

[FR Doc. 02–27148 Filed 10–24–02; 8:45 am]

BILLING CODE 7050–01–P

NATIONAL AERONAUTICS AND SPACE ADMINISTRATION

[Notice 02–125]

NASA Advisory Council, Earth Systems Science and Applications Advisory Committee; Meeting

AGENCY: National Aeronautics and Space Administration (NASA).

ACTION: Notice of Meeting.

SUMMARY: In accordance with the Federal Advisory Committee Act, Pub. L. 92–463, as amended, the National Aeronautics and Space Administration announces a meeting of the NASA

Advisory Council (NAC), Earth Systems Science and Applications Advisory Committee (ESSAAC).

DATES: Wednesday, November 13, 2002, 8:30 a.m. to 5:30 p.m.; and Thursday, November 14, 2002, 8:30 a.m. to 5:30 p.m.

ADDRESSES: Channel Inn Hotel, 650 Water Street SW, Captain's Room, Washington, DC 20024.

FOR FURTHER INFORMATION CONTACT: Mr. Gregory Williams, Code Y, National Aeronautics and Space Administration, Washington, DC 20546, 202/358–0241.

SUPPLEMENTARY INFORMATION: The meeting will be open to the public up to the seating capacity of the room. The agenda for the meeting is as follows:

- Welcome and Opening Remarks
- Agency Perspective & Plans
- Earth Science Enterprise (ESE) Perspective
- Climate Change Research Initiative / U.S. Global Change Research Program
- Overview & ESE Strategic Plan
- Research Strategy & Implementation Planning
- Applications Strategy & Implementation Planning
- NASA and ESE Education Planning—Data and Information Systems Strategy '' Earth Science Information Systems and Services Subcommittee Update
- Technology Strategy and Implementation—Technology Subcommittee Update
- Committee Discussion/Writing Session

It is imperative that the meeting be held on these dates to accommodate the scheduling priorities of the key participants. Visitors will be requested to sign a visitors' register.

June W. Edwards,

Advisory Committee Management Officer, National Aeronautics and Space Administration.

[FR Doc. 02–27252 Filed 10–24–02; 8:45 am]

BILLING CODE 7510–01–P

NATIONAL AREONAUTICS AND SPACE ADMINISTRATION

[Notice 02–126]

NASA Advisory Council, Earth Science Information Systems and Services Subcommittee; Meeting

AGENCY: National Aeronautics and Space Administration (NASA).

ACTION: Notice of meeting.

SUMMARY: In accordance with the Federal Advisory Committee Act, Public Law 92–463, as amended, the National Aeronautics and Space Administration announces a meeting of the NASA Advisory Council (NAC), Earth Systems Science and Applications Advisory Committee (ESSAAC).

DATES: Wednesday, October 30, 2002, 8:30 a.m. to 5:30 p.m.; and Thursday, October 31, 2002, 8:30 a.m. to 1 p.m.

ADDRESSES: Holiday Inn Capitol, Saturn and Venus Rooms, 500 C Street SW., Washington, DC 20003.

FOR FURTHER INFORMATION CONTACT: Ms. Martha Maiden, Code YF, National Aeronautics and Space Administration, Washington, DC 20546, 202/358–1078.

SUPPLEMENTARY INFORMATION: The meeting will be open to the public up to the seating capacity of the room. The agenda for the meeting is as follows:

—Welcome and Introductory Comments

—Earth Science Enterprise (ESE) Strategic Thinking

—ESE Budget Overview

—Data Implementation Roadmap

—Strategic Evolution of ESE Data Systems (SEEDS) Status

—Earth Observation System (EOS) Science Operations and Development Status

—Earth Observation System Data and Information System (EOSDIS) Maintenance and Development (EMD) Procurement Status

—Development of Main Points and Concerns

—Summary of first day/ Recommendations Items

—General Discussion

—Long-term Archive (LTA) Introduction

—National Oceanic and Atmospheric Administration (NOAA) Class Plans and Development Status

—US Geological Survey (USGS) Eros Data Center (EDC) and Land Processes LTA

—Other reports

—Finalize Recommendations/Closing Remarks

It is imperative that the meeting be held on these dates to accommodate the scheduling priorities of the key participants. Visitors will be requested to sign a visitor's register.

June W. Edwards,

Advisory Committee Management Officer, National Aeronautics and Space Administration.

[FR Doc. 02–27265 Filed 10–24–02; 8:45 am]

BILLING CODE 7510–01–P

NATIONAL ARCHIVES AND RECORDS ADMINISTRATION

Records Schedules; Availability and Request for Comments

AGENCY: National Archives and Records Administration (NARA).

ACTION: Notice of availability of proposed records schedules; request for comments.

SUMMARY: The National Archives and Records Administration (NARA) publishes notice at least once monthly of certain Federal agency requests for records disposition authority (records schedules). Once approved by NARA, records schedules provide mandatory instructions on what happens to records when no longer needed for current Government business. They authorize the preservation of records of continuing value in the National Archives of the United States and the destruction, after a specified period, of records lacking administrative, legal, research, or other value. Notice is published for records schedules in which agencies propose to destroy records not previously authorized for disposal or reduce the retention period of records already authorized for disposal. NARA invites public comments on such records schedules, as required by 44 U.S.C. 3303a(a).

DATES: Requests for copies must be received in writing on or before December 9, 2002. Once the appraisal of the records is completed, NARA will send a copy of the schedule. NARA staff usually prepare appraisal memorandums that contain additional information concerning the records covered by a proposed schedule. These, too, may be requested and will be provided once the appraisal is completed. Requesters will be given 30 days to submit comments.

ADDRESSES: To request a copy of any records schedule identified in this notice, write to the Life Cycle Management Division (NWML), National Archives and Records Administration (NARA), 8601 Adelphi Road, College Park, MD 20740–6001. Requests also may be transmitted by FAX to 301–837–3698 or by e-mail to *records.mgt@nara.gov.* Requesters must cite the control number, which appears in parentheses after the name of the agency which submitted the schedule, and must provide a mailing address. Those who desire appraisal reports should so indicate in their request.

FOR FURTHER INFORMATION CONTACT: Larry Baume, Acting Director, Life Cycle Management Division (NWML), National Archives and Records

Administration, 8601 Adelphi Road, College Park, MD 20740–6001. Telephone: 301–837–1505. E-mail: *records.mgt@nara.gov*.

SUPPLEMENTARY INFORMATION: Each year Federal agencies create billions of records on paper, film, magnetic tape, and other media. To control this accumulation, agency records managers prepare schedules proposing retention periods for records and submit these schedules for NARA's approval, using the Standard Form (SF) 115, Request for Records Disposition Authority. These schedules provide for the timely transfer into the National Archives of historically valuable records and authorize the disposal of all other records after the agency no longer needs them to conduct its business. Some schedules are comprehensive and cover all the records of an agency or one of its major subdivisions. Most schedules, however, cover records of only one office or program or a few series of records. Many of these update previously approved schedules, and some include records proposed as permanent.

No Federal records are authorized for destruction without the approval of the Archivist of the United States. This approval is granted only after a thorough consideration of their administrative use by the agency of origin, the rights of the Government and of private persons directly affected by the Government's activities, and whether or not they have historical or other value.

Besides identifying the Federal agencies and any subdivisions requesting disposition authority, this public notice lists the organizational unit(s) accumulating the records or indicates agency-wide applicability in the case of schedules that cover records that may be accumulated throughout an agency. This notice provides the control number assigned to each schedule, the total number of schedule items, and the number of temporary items (the records proposed for destruction). It also includes a brief description of the temporary records. The records schedule itself contains a full description of the records at the file unit level as well as their disposition. If NARA staff has prepared an appraisal memorandum for the schedule, it too includes information about the records. Further information about the disposition process is available on request.

Schedules Pending

1. Department of Commerce, United States Patent and Trademark Office (N1–241–02–2, 2 items, 2 temporary items). Provisional patent applications and related copies that are received for initial review by the Office of Initial Patent Examination.

2. Department of Defense, Defense Threat Reduction Agency (N1–374–02–8, 17 items, 12 temporary items). Records relating to the operation of the Radiation Experiments Command Center (RECC). Temporary records include components of the RECC Database, related hard copy files, and administrative and working files as well as electronic copies of records created using word processing and electronic mail. Proposed for permanent retention are components and outputs of the RECC database, related system documentation, and paper files relating to human radiation experiments.

3. Department of Defense, National Reconnaissance Office (N1–525–02–2, 4 items, 4 temporary items). Employee grievance and management inquiry files. Also included are electronic copies of documents created using electronic mail and word processing.

4. Department of Energy, Idaho Operations Office (N1–434–02–1, 3 items 3 temporary items). Records relating recordings of ground velocity taken by a seismometer (seismogram records). Also included are the electronic copies of records created using electronic mail and word processing.

5. Department of Interior, U.S. Geological Survey (N1–57–02–4, 151 items, 145 temporary items). Records relating to acquisition, supply and grant matters, emergency planning, safety, security, and environmental matters, and property management. Records relate to such subjects as procurement, charge card purchases, grant programs, control of classified documents, protection and technical surveillance countermeasures, security and access control, misuse of government property, background investigations, safety training, hazardous waste management, emergency planning, environmental compliance, fire reports, personal property, motor vehicle and watercraft management, museum management, and real property management. Also included are electronic copies of records created using electronic mail, spreadsheet, and word processing applications. Proposed for permanent retention are recordkeeping copies of records relating to such subjects as agency document classification programs and policies, the protection of cultural resources and mineral resources, and pest management programs.

6. Department of Interior, U.S. Fish and Wildlife Service (N1–22–02–1, 8 items, 8 temporary items). Records relating to volunteer activities including such files as personnel records of volunteers, administrative files, reports, and rosters of volunteer personnel in both electronic and paper media. Also included are electronic copies of records created using electronic mail and word processing.

7. Department of State, Bureau of Administration (N1–59–02–5, 10 items, 10 temporary items). Records relating to personnel matters, including Foreign Service employee emergency locator records, files relating to leave, travel, and payroll, and death case files relating to agency employees who die while in-service. Also included are electronic copies of documents created using electronic mail and word processing.

8. Department of the Treasury, Office of General Counsel (N1–56–02–5, 58 items, 51 temporary). Attorney working files, document production records, legal matter files and related tracking systems, litigation files, standards of conduct files, records relating to the specific sanctions program, and other records accumulated by the Office of General Counsel. Also included are electronic copies of documents created using electronic mail and word processing. Proposed for permanent retention are recordkeeping copies of such files as general counsel memoranda, general counsel opinions, and selected records relating to significant legal matters and litigation.

9. Department of the Treasury, Bureau of the Public Debt, (N1–53–02–8, 10 items, 10 temporary items). Inputs, outputs, system documentation, and master files of the Internal Revenue Information System. This system reports interest earned on foreign owned accounts and is used to prepare IRS Forms 1042–S that are mailed to account holders. Also included are electronic copies of documents created using electronic mail and word processing applications.

10. Department of the Treasury, Bureau of the Public Debt, (N1–53–02–9, 12 items, 11 temporary items). Records of the Office of Public Debt Accounting, including such records as debt statements and reconciliations, financial statements and reconciliations, accounting reviews, and exception reports. Historical reports of the Government's debt and expenses are proposed for permanent retention.

11. Department of the Treasury, Bureau of the Public Debt (N1–53–02–10, 17 items, 15 temporary items). Savings Bond Marketing Office records consisting of reports and documents

generated from the Payroll Savings Participation System and the Call and Progress Summary System. Records are used to develop and focus marketing efforts. Also included are electronic copies of documents created using electronic mail and word processing. Recordkeeping copies of Action Bulletins and Printed Promotional Materials are proposed for permanent retention.

12. Department of the Treasury, Bureau of the Public Debt, (N1–53–02–14, 6 items, 6 temporary items). Electronic records and related output reports used in connection with the printing, tracking, and distribution of agency forms.

13. Central Intelligence Agency, Directorate of Intelligence (N1–263–02–3, 7 items, 7 temporary items). Inputs, master data, outputs, backup tapes, and documentation for the Trade Data Aggregation and Recovery System, an electronic system containing international import and export data.

14. Executive Office of the President, Office of Telecommunications Policy (N1–429–02–3, 3 items, 1 temporary item). Reports prepared by study groups of the International Telegraph and Telephone Consultative Committee, 1968–1972. Proposed for permanent retention are files of the Assistant Director of the Office of Telecommunications Policy, 1971–1972, and subject files pertaining to communications matters, 1952–1970.

15. Farm Credit Administration, Agency-wide (N1–103–02–1, 4 items, 4 temporary items). Administrative subject files and records that document the Farm Credit Banks Funding Corporation's funding approval process. Records include correspondence and reports, offering circulars, term sheets, and sale confirmations. Also included are electronic copies of records created using electronic mail and word processing.

16. Office of Navajo and Hopi Indian Relocation, Executive Direction (N1–220–02–18, 3 items, 2 temporary items). Electronic copies of records created using electronic mail and word processing that relate to legislative history matters. Recordkeeping copies of these files are proposed for permanent retention.

17. Office of Navajo and Hopi Indian Relocation, Relocation Operations (N1–220–02–19, 7 items, 4 temporary items). Electronic copies of records created using electronic mail and word processing that relate to such matters as accommodation and stipulated settlement agreements, Hopi partitioned land reports, and residents on Hopi partitioned land who relinquished their interests in accommodation agreements. Recordkeeping copies of these files are proposed for permanent retention.

18. Tennessee Valley Authority, Transmission Power Supply (N1–142–01–4, 5 items, 5 temporary items). Paper and electronic surveying records including field notebooks, computation sheets, estimates, maps, reports, correspondence, and supporting materials. Also included are electronic copies of records created using word processing and electronic mail.

Dated: October 18, 2002.

Michael J. Kurtz,

Assistant Archivist for Record Services—Washington, DC.

[FR Doc. 02–27182 Filed 10–24–02; 8:45 am]

BILLING CODE 7515–01–P

NUCLEAR REGULATORY COMMISSION

Documents Containing Reporting or Recordkeeping Requirements: Office of Management and Budget (OMB) Review

AGENCY: U.S. Nuclear Regulatory Commission (NRC).

ACTION: Notice of the OMB review of information collection and solicitation of public comment.

SUMMARY: The NRC has recently submitted to OMB for review the following proposal for the collection of information under the provisions of the Paperwork Reduction Act of 1995 (44 U.S.C. Chapter 35).

1. *Type of submission, new, revision, or extension:* Revision.

1. *The title of the information collection:* Proposed Rule, 10 CFR part 50.48, ''Fire Protection, Voluntary Adoption of NFPA 805 Fire Protection Requirements''.

3. *The form number if applicable:* Not applicable.

4. *How often the collection is required:* When reactor licensees choose to adopt NFPA 805 fire protection requirements (once), or when requesting NRC approval for use of alternative methods or analytical approaches under NFPA 805 (as needed).

5. *Who will be required or asked to report:* Current light water reactor licensees choosing to adopt NFPA 805 fire protection requirements.

6. *An estimate of the number of annual responses:* 6 (4 reactor plants adopting NFPA 805 fire protection requirements, and 2 reactor plants requesting to use alternative methods or analytical approaches).

7. *The estimated number of annual respondents:* Four licensees adopting NFPA 805 fire protection requirements, and two licensees requesting to use alternative methods or analytical approaches.

8. *An estimate of the net total number of hours needed to complete the requirement or request (annual total for all plants):* 3156 hours of reporting per year, and 180,800 hours of recordkeeping per year (offset by reductions in exemption request processing and cost reductions associated with reduced maintenance, operating and training costs for fire protection features which can be removed from the reactor plants.)

9. *An indication of whether section 3507(d), Pub. L. 104–13 applies:* Applicable.

10. *Abstract:* The proposed rule would modify 10 CFR 50.48 to permit existing reactor licensees to voluntarily adopt a set of fire protection requirements contained in the National Fire Protection Association (NFPA) Standard 805, ''Performance-Based Standard for Fire Protection for Light Water Reactor Electric Generating Plants, 2001 Edition'' (NFPA 805).

Submit, by November 25, 2002, comments that address the following questions:

1. Is the proposed collection of information necessary for the NRC to properly perform its functions? Does the information have practical utility?

2. Is the burden estimate accurate?

3. Is there a way to enhance the quality, utility, and clarity of the information to be collected?

4. How can the burden of the information collection be minimized, including the use of automated collection techniques or other forms of information technology?

A copy of the NRC's submittal to OMB may be viewed free of charge at the NRC Public Document Room, One White Flint North, 11555 Rockville Pike, Room O–1 F21, Rockville, MD 20852. The proposed rule ''Revision of 10 CFR 50.48 to Permit Light-water Reactors to Voluntarily Adopt National Fire Protection Association (NFPA) Standard 805, 'Performance-based Standard for Fire Protection for Light-water Reactor Electric Generating Plants, 2001 Edition' as an Alternative Set of Risk-informed and performance-based Fire Protection Requirements'' is or has been published in the **Federal Register** within several days of the publication date of this **Federal Register** Notice. The OMB clearance package and rule are available at the NRC worldwide Web site: *http://www.nrc.gov/public-involve/doc-comment/omb/index.html* for 60 days after the signature date of this notice and are also available at the

rule forum site, *http://ruleforum.llnl.gov.*

Comments and questions should be directed to the OMB reviewer by November 25, 2002: Bryon Allen, Office of Information and Regulatory Affairs (3150–0011), NEOB–10202, Office of Management and Budget, Washington, DC 20503.

Comments can also be submitted by telephone at (202) 395–3087.

The NRC Clearance Officer is Brenda Jo. Shelton, (301) 415–7233.

Dated at Rockville, Maryland, this 17th day of October 2002.

For the Nuclear Regulatory Commission.

Brenda Jo. Shelton,

NRC Clearance Officer, Office of the Chief Information Officer.

[FR Doc. 02–27241 Filed 10–24–02; 8:45 am]

BILLING CODE 7590–01–P

NUCLEAR REGULATORY COMMISSION

[Docket No. 50–395]

South Carolina Electric and Gas Company, Virgil C. Summer Nuclear Station, Unit 1; Notice of Intent to Prepare an Environmental Impact Statement and Conduct Scoping Process

South Carolina Electric and Gas Company (SCE&G) has submitted an application for renewal of operating license NPF–12 for an additional 20 years of operation at Virgil C. Summer Nuclear Station (V.C. Summer), Unit 1. V.C. Summer is located in the southeastern corner of rural Fairfield County, South Carolina, approximately 26 miles northwest of Columbia, South Carolina. The application for renewal was submitted by letter dated August 6, 2002, pursuant to 10 CFR part 54. A notice of receipt of application, including the environmental report (ER), was published in the **Federal Register** on September 3, 2002 (67 FR 56316). A notice of acceptance for docketing of the application for renewal of the facility operating license was published in the **Federal Register** on October 10, 2002 (67 FR 62272). The purpose of this notice is to inform the public that the U.S. Nuclear Regulatory Commission (NRC) will be preparing an environmental impact statement (EIS) in support of the review of the license renewal application and to provide the public an opportunity to participate in the environmental scoping process as defined in 10 CFR 51.29.

In accordance with 10 CFR 54.23 and 10 CFR 51.53(c), SCE&G submitted the ER as part of the application. The ER was prepared pursuant to 10 CFR part 51 and is available for public inspection at the NRC's Public Document Room (PDR), located at One White Flint North, 11555 Rockville Pike (first floor), Rockville, Maryland, or from the Publicly Available Records component of NRC's Agencywide Documents Access and Management System (ADAMS). ADAMS is accessible at *http://www.nrc.gov/reading-rm/adams.html,* which provides access through the NRC's Public Electronic Reading Room (PERR). Persons who do not have access to ADAMS or who encounter problems in accessing the documents located in ADAMS, should contact the NRC's PDR reference staff at 1–800–397–4209, (301) 415–4737, or by email to *pdr@nrc.gov.* The application may also be viewed on the Internet at *http://www.nrc.gov/reactors/operating/licensing/renewal/applications/summer.html.* In addition, the Thomas Cooper Library, located at 1322 Greene Street, Columbia, South Carolina 29208, and the Fairfield County Library, located at 300 Washington Street, Winnsboro, South Carolina 29180, have agreed to make the ER available for public inspection.

This notice advises the public that the NRC intends to gather the information necessary to prepare a plant-specific supplement to the Commission's ''Generic Environmental Impact Statement (GEIS) for License Renewal of Nuclear Plants,'' (NUREG–1437) in support of the review of the application for renewal of the V.C. Summer operating license for an additional 20 years. Possible alternatives to the proposed action (license renewal) include no action and reasonable alternative energy sources. Title 10 of the CFR, section 10 CFR 51.95 requires that the NRC prepare a supplement to the GEIS in connection with the renewal of an operating license. This notice is being published in accordance with the National Environmental Policy Act (NEPA) and the NRC's regulations found in 10 CFR part 51.

The NRC will first conduct a scoping process for the supplement to the GEIS and, as soon as practicable thereafter, will prepare a draft supplement to the GEIS for public comment. Participation in this scoping process by members of the public and local, State, and Federal government agencies is encouraged. The scoping process for the supplement to the GEIS will be used to accomplish the following:

a. Define the proposed action which is to be the subject of the supplement to the GEIS.

b. Determine the scope of the supplement to the GEIS and identify the significant issues to be analyzed in depth.

c. Identify and eliminate from detailed study those issues that are peripheral or that are not significant.

d. Identify any environmental assessments and other EISs that are being or will be prepared that are related to, but are not part of the scope of the supplement to the GEIS being considered.

e. Identify other environmental review and consultation requirements related to the proposed action.

f. Indicate the relationship between the timing of the preparation of environmental analyses and the Commission's tentative planning and decision-making schedule.

g. Identify any cooperating agencies and, as appropriate, allocate assignments for preparation and schedules for completing the supplement to the GEIS to the NRC and any cooperating agencies.

h. Describe how the supplement to the GEIS will be prepared, including any contractor assistance to be used.

The NRC invites the following entities to participate in the scoping process:

a. The applicant, SCE&G.

b. Any Federal agency that has jurisdiction by law or special expertise with respect to any environmental impact involved, or that is authorized to develop and enforce relevant environmental standards.

c. Affected State and local government agencies, including those authorized to develop and enforce relevant environmental standards.

d. Any affected Indian tribe.

e. Any person who requests or has requested an opportunity to participate in the scoping process.

f. Any person who intends to petition for leave to intervene.

In accordance with 10 CFR 51.26, the scoping process for an EIS may include a public scoping meeting to help identify significant issues related to a proposed activity and to determine the scope of issues to be addressed in an EIS. The NRC has decided to hold a public meeting for the V.C. Summer license renewal supplement to the GEIS. The scoping meeting will be held at the White Hall Fellowship Room at the White Hall A.M.E. Church located at 8594 State Highway 215 South, Jenkinsville, South Carolina, on Wednesday, December 11, 2002. There will be two sessions to accommodate interested parties. The first session will convene at 1:30 p.m. and will continue until 4:30 p.m. The second session will convene at 7:00 p.m. with a repeat of the overview portions of the meeting and will continue until 10:00 p.m. Both

meetings will be transcribed and will include: (1) An overview by the NRC staff of the NEPA environmental review process, the proposed scope of the supplement to the GEIS, and the proposed review schedule; (2) an overview by SCE&G of the proposed action, V.C. Summer license renewal, and the environmental impacts as outlined in the ER; and (3) the opportunity for interested government agencies, organizations, and individuals to submit comments or suggestions on the environmental issues or the proposed scope of the supplement to the GEIS. Additionally, the NRC staff will host informal discussions one hour prior to the start of each session at the White Hall Fellowship Room. No comments on the proposed scope of the supplement to the GEIS will be accepted during the informal discussions. To be considered, comments must be provided either at the transcribed public meetings or in writing, as discussed below. Persons may register to attend or present oral comments at the meeting on the NEPA scoping process by contacting Mr. Gregory F. Suber by telephone at 1–800–368–5642, extension 1124, or by Internet to the NRC at *gxs@nrc.gov* no later than November 15, 2002. Members of the public may also register to speak at the meeting within 15 minutes of the start of each session. Individual oral comments may be limited by the time available, depending on the number of persons who register. Members of the public who have not registered may also have an opportunity to speak, if time permits. Public comments will be considered in the scoping process for the supplement to the GEIS. If special equipment or accommodations are needed to attend or present information at the public meeting, the need should be brought to Mr. Suber's attention no later than November 15, 2002, so that the NRC staff can determine whether the request can be accommodated.

Members of the public may send written comments on the environmental scoping process for the supplement to the GEIS to: Chief, Rules and Directives Branch, Division of Administrative Services, Office of Administration, Mailstop T–6 D 59, U.S. Nuclear Regulatory Commission, Washington, DC 20555–0001.

Comments may be hand-delivered to the NRC at 11545 Rockville Pike, Rockville, Maryland, between 7:45 a.m. and 4:15 p.m. on Federal workdays. To be considered in the scoping process, written comments should be postmarked by January 6, 2003. Electronic comments may be sent by the Internet to the NRC at *VCSummerEIS@nrc.gov.* Electronic submissions should be sent no later than January 6, 2003, to be considered in the scoping process. Comments will be available electronically and accessible through the NRC's PERR link, *http://www.nrc.gov/NRC/ADAMS/index.html,* at the NRC Home page.

Participation in the scoping process for the supplement to the GEIS does not entitle participants to become parties to the proceeding to which the supplement to the GEIS relates. Notice of opportunity for a hearing regarding the renewal application was the subject of the aforementioned **Federal Register** notice of acceptance for docketing. Matters related to participation in any hearing are outside the scope of matters to be discussed at this public meeting.

At the conclusion of the scoping process, the NRC will prepare a concise summary of the determination and conclusions reached, including the significant issues identified, and will send a copy of the summary to each participant in the scoping process. The summary will also be available for inspection through the PERR link. The staff will then prepare and issue for comment the draft supplement to the GEIS, which will be the subject of separate notices and a separate public meeting. Copies will be available for public inspection at the above-mentioned addresses, and one copy per request will be provided free of charge. After receipt and consideration of the comments, the NRC will prepare a final supplement to the GEIS, which will also be available for public inspection.

Information about the proposed action, the supplement to the GEIS, and the scoping process may be obtained from Mr. Suber at the aforementioned telephone number or e-mail address.

Dated at Rockville, Maryland, this 23rd, day of October, 2002.

For the Nuclear Regulatory Commission

Pao-Tsin Kuo,

Program Director, License Renewal and Environmental Impacts Program, Division of Regulatory Improvement Programs, Office of Nuclear Reactor Regulation.

[FR Doc. 02–27334 Filed 10–24–02; 8:45 am]

BILLING CODE 7590–01–P

NUCLEAR REGULATORY COMMISSION

[Docket No. 70–3103]

Louisiana Energy Services Gas Centrifuge Enrichment Facility

AGENCY: Nuclear Regulatory Commission.

ACTION: Extension of opportunity to provide public comments.

SUMMARY: In a **Federal Register** Notice (67 FR 61932), dated October 2, 2002, the U.S. Nuclear Regulatory Commission (NRC) requested comments from members of the public concerning a series of ''white papers'' presented to the NRC by the Louisiana Energy Services (LES) addressing licensing issues for a gas centrifuge uranium enrichment facility to be located in the area of Hartsville, Trousdale County, Tennessee. The October 2, 2002, **Federal Register** Notice provided a 30-day comment period. As a result of comments made at an October 14, 2002, public information forum sponsored by Trousdale County, Tennessee, the Commission is extending the comment period to November 13, 2002.

DATES: Comments are due by November 13, 2002. Comments received after this date will be considered if it is practical to do so, but the NRC is able to ensure consideration only for comments received on or before this date.

FOR FURTHER INFORMATION CONTACT: Mr. Timothy C. Johnson, Project Manager, Special Projects and Inspection Branch, Division of Fuel Cycle Safety and Safeguards, Office of Nuclear Material Safety and Safeguards, U.S. Nuclear Regulatory Commission, Mail Stop T–8A33, Washington, DC 20555. Telephone (301) 415–7299, e-mail *TCJ@nrc.gov.*

SUPPLEMENTARY INFORMATION: In a **Federal Register** Notice (67 FR 61932), dated October 2, 2002, NRC published an opportunity for the public to provide comments on six pre-application policy issue ''white papers.'' LES submitted these white papers to the Commission as LES believes that Commission direction on these issues will be essential to the conduct of an efficient regulatory review process. *The white papers addressed the following subjects:*

1. Analysis of need for the facility and the no-action alternative under the National Environmental Policy Act;
2. Environmental justice;
3. Financial qualifications;
4. Antitrust review;
5. Foreign ownership;
6. Disposition of depleted uranium tails.

A public meeting was held on April 30, 2002, to discuss these papers. Comments on the papers were submitted by two attendees at the meeting: the Department of Energy (DOE) and the United States Enrichment Corporation (USEC). The NRC prepared a meeting summary, dated May 28, 2002, which is publicly available. At the time of the April meeting, LES had not chosen a site for the facility.

On October 14, 2002, at a public information forum sponsored by

Trousdale County, Tennessee, several members of the public requested a 90-day extension of the comment period because the opportunity to provide comments was not locally advertised. On October 16, 2002, LES requested that NRC extend the comment period to end 30 days after the public information forum on October 14, 2002. After considering these requests, the Commission is extending the comment period. NRC considers that the extension provides sufficient time for members of the public to review the LES ''white papers'' and provide comment.

The April 24, 2002, LES ''white papers''; the May 28, 2002, NRC Meeting Summary; DOE's July 25, 2002, comments; and USEC's June 19, 2002, comments are accessible electronically from the NRC Agency wide Documents Access and Management System (ADAMS) Public Electronic Reading Room on the internet at the NRC Web site, *http://www.nrc.gov/readingrm/adams.html.* The ADAMS Accession Numbers for these documents are: ML022350051, ML021480298, ML022350130, and ML021770197, respectively. These documents may also be examined and/or copied for a fee at NRC's Public Document Room located at One White Flint North, 11555 Rockville Pike (first floor), Rockville, Maryland.

Members of the public may provide comments by November 13, 2002. The comments may be provided to Michael Lesar, Chief, Rules Review and Directives Branch, Division of Administration Services, Office of Administration, U.S. Nuclear Regulatory Commission, Washington, DC 20555.

Dated at Rockville, Maryland, this 18th day October, 2002.

For the U.S. Nuclear Regulatory Commission.

Melvyn N. Leach,

Chief, Special Projects and Inspection Branch, Division of Fuel Cycle Safety and Safeguards, Office of Nuclear Material Safety and Safeguards.

[FR Doc. 02–27242 Filed 10–24–02; 8:45 am]

BILLING CODE 7590–01–P

OVERSEAS PRIVATE INVESTMENT CORPORATION

Africa Investment Advisory Council Meeting

TIME AND DATE: Monday, October 21, 2002, Noon—3 PM (OPEN Portion) [1]

PLACE: Offices of the Corporation, Twelfth Floor Europe Room, 1100 New York Avenue, NW., Washington, DC.

STATUS: Meeting OPEN to the Public.

MATTERS TO BE CONSIDERED:

1. Welcome & Introductory Remarks.
2. Introduction to OPIC Instruments & Africa Project Portfolios.
3. Africa Investment Advisory Council: Role & Administrative Issues.
4. Discussion/Q&A.

Note: Due to unforeseen circumstances, this notice is published less than 15 days prior to the meeting (41 CFR 102–3.150(b)).

CONTACT PERSON FOR INFORMATION: Information on the meeting may be obtained from Marysue K. Shore at (202) 336–8630.

Dated: October 21, 2002.

Marysue K. Shore,

Senior Advisor to the President and Director, African Affairs, Overseas Private Investment Corporation.

[FR Doc. 02–27141 Filed 10–24–02; 8:45 am]

BILLING CODE 3210–01–M

SECURITIES AND EXCHANGE COMMISSION

Proposed Collection; Comment Request

Upon Written Request, Copies Available From: Securities and Exchange Commission, Office of Filings and Information Services, Washington, DC 20549.

Extension: Rule 11a1–1(T), SEC File No. 270–428, OMB Control No. 3235–0478.

Notice is hereby given that pursuant to the Paperwork Reduction Act of 1995 (44 U.S.C. 3501 *et seq.*), the Securities and Exchange Commission (''Commission'') is soliciting comments on the collection of information summarized below. The Commission plans to submit this existing collection of information to the Office of Management and Budget for extension and approval.

• Rule 11a1–1(T)—Transaction Yielding Priority, Parity, and Precedence

On January 27, 1976, the Commission adopted Rule 11a1–1(T) under the Securities Exchange Act of 1934 (''Exchange Act'') to exempt transactions of exchange members for their own accounts that would otherwise be prohibited under Section 11(a) of the Exchange Act. The rule provides that a member's proprietary order may be executed on the exchange of which the trader is a member, if, among other things: (1) The member discloses that a bid or offer for its account is for its account to any member with whom such bid or offer is placed or to whom it is communicated; (2) any such member through whom that bid or offer is communicated discloses to others participating in effecting the order that it is for account of a member; and (3) immediately before executing the order, a member (other than a specialist in such security) presenting any order for the account of a member on the exchange clearly announces or otherwise indicates to the specialist and to other members then present that he is presenting an order for the account of a member.

Without these requirements, it would not be possible for the Commission to monitor its mandate under the Exchange Act to promote fair and orderly markets and ensure that exchange members have, as the principle purpose of their exchange memberships, the conduct of a public securities business.

There are approximately 1,000 respondents that require an aggregate total of 333 hours to comply with this rule. Each of these approximately 1,000 respondents makes an estimated 20 annual responses, for an aggregate of 20,000 responses per year. Each response takes approximately 1 minute to complete. Thus, the total compliance burden per year is 333 hours (20,000 minutes/60 minutes per hour = 333 hours). The approximate cost per hour is $100, resulting in a total cost of compliance for the respondents of $33,333 (333 hours @ $100).

Written comments are invited on: (a) Whether the proposed collection of information is necessary for the proper performance of the functions of the agency, including whether the information shall have practical utility; (b) the accuracy of the agency's estimates of the burden of the proposed collection of information; (c) ways to enhance the quality, utility, and clarity of the information to be collected; and (d) ways to minimize the burden of the collection of information on respondents, including through the use of automated collection techniques or other forms of information technology. Consideration will be given to comments and suggestions submitted in writing within 60 days of this publication.

Please direct your written comments to Kenneth A. Fogash, Acting Associate Executive Director for the Office of Information Technology, Securities and Exchange Commission, 450 5th Street, NW., Washington, DC 20549.

[1] **Editorial Note:** This document was received at the Office of the Federal Register on October 21, 2002.

Dated: October 18, 2002.

Margaret H. McFarland,

Deputy Secretary.

[FR Doc. 02–27224 Filed 10–24–02; 8:45 am]

BILLING CODE 8010–01–P

SECURITIES AND EXCHANGE COMMISSION

[Release Number IC–25774; 812–12598]

Corvis Corporation; Notice of Application

October 21, 2002.

AGENCY: Securities and Exchange Commission (''Commission'').

ACTION: Notice of application under section 3(b)(2) of the Investment Company Act of 1940 (the ''Act'').

SUMMARY OF APPLICATION: Applicant Corvis Corporation (''Corvis'') seeks an order under section 3(b)(2) of the Act declaring it to be primarily engaged in a business other than that of investing, reinvesting, owning, holding or trading in securities. Corvis is a telecommunications company that designs, manufactures, and sells high performance optical networking products.

FILING DATES: The application was filed on August 7, 2001 and amended on October 18, 2002.

HEARING OR NOTIFICATION OF HEARING: An order granting the requested relief will be issued unless the Commission orders a hearing. Interested persons may request a hearing by writing to the Commission's Secretary and serving applicants with a copy of the request, personally or by mail. Hearing requests should be received by the Commission by 5:30 p.m. on November 15, 2002, and should be accompanied by proof of service on applicants, in the form of an affidavit or, for lawyers, a certificate of service. Hearing requests should state the nature of the writer's interest, the reason for the request, and the issues contested. Persons who wish to be notified of a hearing may request notification by writing to the Commission's Secretary.

ADDRESSES: Secretary, Securities and Exchange Commission, 450 Fifth Street, NW., Washington, DC 20549–0609. Applicant, 7015 Albert Einstein Drive, Columbia, MD, 21046–9400.

FOR FURTHER INFORMATION CONTACT: Julia Kim Gilmer, Senior Counsel, at (202) 942–0528, or Janet M. Grossnickle, Branch Chief, at (202) 942–0564 (Division of Investment Management, Office of Investment Company Regulation).

SUPPLEMENTARY INFORMATION: The following is a summary of the application. The complete application may be obtained for a fee at the Commission's Public Reference Branch, 450 Fifth Street, NW., Washington, DC 20549–0102 (tel. 202–942–8090).

Applicant's Representations

1. Corvis, a Delaware corporation, is in the business of designing, manufacturing and selling high performance optical networking products through its direct and indirect interests in wholly-owned subsidiaries and Acme Grating, LLC (''Acme Grating''), a company it controls within the meaning of section 2(a)(9) of the Act.[1] As a development stage company, Corvis' operations consisted primarily of research and development, product design, manufacturing and testing of optical communications systems. As an operating company, Corvis has conducted field trials for customers, deployed transmission and switching equipment, built up finished goods inventory to support customer service orders, and sold products to its customers.

2. Corvis states that it needs to maintain a large amount of capital in order to cover expenses related to the research and development of new technology, products, product enhancements, and other operational expenses such as marketing. Corvis desires to use a portion of its working capital to invest in short-term, investment grade securities, as outlined in its investment policies which are attached to the application (''Capital Preservation Investments''), pending the use of such capital for its current and future operations. Corvis also states that it must preserve capital for carrying out future mergers and acquisitions and for entering into strategic partnerships and joint ventures.

3. Corvis also makes and expects to continue making investments in long-term, non-controlling, strategic investments in the debt or equity securities of other entities (''Strategic Investments''). Corvis states that its current Strategic Investments are invested in developing-stage privately held companies that are engaged in businesses that Corvis believes complement its technology. Corvis further states that it views its Strategic Investments as a means to facilitate the development of next-generation technology and foster positive relations with companies that Corvis believes will add value to its products.

4. In October 2000, Corvis created Corvis US Capital, Inc. (''US Capital''), a Delaware corporation, for tax and business reasons unrelated to the Act, to hold Corvis' cash, Capital Preservation Investments, Strategic Investments and other marketable investment securities. Corvis indirectly owns all of the outstanding securities (other than short-term paper and directors' qualifying shares) of US Capital. Corvis states that it has not, does not currently, and does not intend in the future to engage in short-term trading of any securities, including Capital Preservation Investments and Strategic Investments.

Applicant's Legal Analysis

1. Corvis seeks an order under section 3(b)(2) of the Act declaring that it is primarily engaged in a business other than that of investing, reinvesting, owning, holding or trading in securities, and therefore not an investment company as defined in the Act.

2. Under section 3(a)(1)(C) of the Act, an issuer is an investment company if it is engaged or proposes to engage in the business of investing, reinvesting, owning, holding or trading in securities, and owns or proposes to acquire investment securities having a value in excess of 40% of the value of the issuer's total assets (exclusive of Government securities and cash items) on an unconsolidated basis. Section 3(a)(2) of the Act provides that ''investment securities'' include all securities except government securities, securities issued by employees' securities companies, and securities issued by majority-owned subsidiaries of the owner which (i) are not investment companies, and (ii) are not relying on the exclusions from the definition of investment company in section 3(c)(1) or 3(c)(7) of the Act.

3. Corvis states that as of June 29, 2002, 82% of its total assets (exclusive of government securities and cash items), on an unconsolidated basis, consistent of investment securities as defined in section 3(a)(2) of the Act. Corvis believes that this percentage may rise as it acquires additional Capital Preservation Investments, writes down the value of certain assets (such as goodwill), takes restructuring charges, and disposes of other assets (such as excess or obsolete inventory and surplus equipment).

4. Rule 3a–1 provides an exemption from the definition of investment company if no more than 45% of a company's total assets consist of, and

[1] Corvis owns 49% of the voting shares and 99% of the economic interest in Acme Grating. Acme Grating owns certain licensed intellectual property that it uses to manufacture gratings that Corvis purchases and uses in its operations. Corvis states that, as of June 29, 2002, Acme Grating had total assets of $0.

not more than 45% of its net income over the last four quarters is derived from, securities other than government securities and securities of majority-owned subsidiaries and companies primarily controlled by it. Corvis states that it cannot rely upon rule 3a–1 under the Act because it has suffered operating losses for the twelve months ended June 29, 2002, while earning some investment income during the same period.

5. Section 3(b)(2) of the Act provides that, notwithstanding section 3(a)(1)(C) of the Act, the Commission may issue an order declaring an issuer to be primarily engaged in a business or businesses other than that of investing, reinvesting, owning, holding, or trading in securities either directly, through majority-owned subsidiaries, or controlled companies conducting similar types of business. Corvis requests an order under section 3(b)(2) of the Act declaring that it is primarily engaged in a business other than that of investing, reinvesting, owning, holding or trading in securities, and therefore not an investment company as defined in the Act.

6. In determining whether a company is primarily engaged in a non-investment company business under section 3(b)(2), the Commission considers: (a) The issuer's historical development; (b) its public representations of policy; (c) the activities of its officers and directors; (d) the nature of its present assets; and (e) the sources of its present income.[2]

a. *Historical Development.* Corvis has been a development stage company from the time of its inception until July 2000 and an operating company from that time to the present. As a development stage company, Corvis' operations consisted primarily of research and development, product design, manufacturing, and testing of optical communications systems. As an operating company, Corvis has conducted field trials for customers, deployed transmission and switching equipment and built up finished goods inventory to support customer service orders and sold products to its customers. Corvis states that all of its activities since its formation have been devoted solely to designing, manufacturing and marketing high performance optical communications systems. Corvis has not disposed of any of its Strategic Investments and does not plan to dispose of any Strategic Investments in the foreseeable future.

b. *Public Representations of Policy.* Corvis states that it has never represented that it is involved in any business other than designing, manufacturing and selling high performance optical networking products. Corvis asserts that it has consistently stated in its reports to stockholders, press releases and filings with the Commission that it is a telecommunications company. Corvis states that it has emphasized operating results and has never emphasized either its investment income or the possibility of significant appreciation from its Capital Preservation Investments or Strategic Investments as a material factor in its business or future growth.

c. *Activities of Officers and Directors.* Corvis states that its senior officers and directors are actively engaged in the management of telecommunications business and that their educational and business backgrounds are predominantly in the fields of engineering, physics, telecommunications, accounting, mathematics, marketing, software development, computer science, general management and law. Only two of the twenty-six directors, executive officers and key employees have a securities investment background or private equity experience. Three Corvis officers and a director from Corvis' Board of Directors (''Board''), who is not an officer or employee of Corvis, serve on a committee (the ''Investment Committee'') that manages the investment portfolio. The officers and director devote, on average, less than 1% of their time to matters relating to Capital Preservation Investments and Strategic Investments. The involvement of Corvis' Board in capital preservation efforts has been limited to establishing investment objectives for the Capital Preservation Investments. Further, Corvis states that its approximately 900 employees collectively spend approximately 58% of their time on research and development, 24% of their time designing and manufacturing products, 18% of their time on accounting, recruiting, marketing products, and other administrative matters, and less than 1% of their time on Capital Preservation Investments and Strategic Investments.

d. *Nature of Assets.* Corvis states that as of June 29, 2002, its total assets (exclusive of Government securities and cash items, as such terms have been interpreted by the Commission or its staff), consolidated with US Capital, was $581.50 million, approximately 14.9% of which represented investment securities as defined in section 3(a)(2) of the Act.[3] Corvis further represents that as of June 29, 2002, less than 1% of these investment securities were Strategic Investments, and the rest were Capital Preservation Investments. Corvis states that Capital Preservation Investments consist of short-term investment grade securities held by Corvis not for investment purposes, but to preserve its capital pending its use in operations. Corvis further states that Strategic Investments are not contemplated to comprise as much as 4% of Corvis' total assets.

e. *Sources of Income and Revenue.* Corvis states that its subsidiaries (other than US Capital) and Acme Grating, a controlled company, are emerging telecommunications businesses that typically generate little or no income for Corvis in the form of dividends or capital appreciation and have produced significant losses for Corvis to date. Corvis asserts that its activities as an operating company are more appropriately analyzed by evaluating Corvis' proportionate share of the revenues from directly-owned assets, wholly-owned subsidiaries and Acme Grating in light of Corvis' total revenues. Corvis states that, for the four quarters ending June 29, 2002, revenues from its directly-owned assets, wholly-owned subsidiaries and Acme Grating represented approximately 84.1% of Corvis' total revenues.[4] Corvis expects that in the future, the percentage of its total revenues derived from operating activities will ordinarily be over 80% and the percentage derived from investments will ordinarily be under

[2] Tonopah Mining Company of Nevada, 26 SEC 426, 427 (1947).

[3] Corvis states that the value of its interests in controlled conducting similar types of business is $0 million. Additionally, for the purposes of this analysis, US Capital's holdings of money market fund shares have been treated as ''cash items.'' Corvis states that these money market funds comply with rule 2a–7 of the Act and seek to maintain a stable net asset value of $1.00 per share. Corvis states that consolidating its assets with those of US Capital provides a more accurate picture of its telecommunications business because the assets held by US Capital will only consist of money market fund shares, other Capital Preservation Investments, some or all of the Strategic Investments and other marketable debt and equity securities. Moreover, since US Capital is a wholly-owned subsidiary, consolidation will not result in the type of distortions that could result from consolidating other types of subsidiaries.

[4] For purposes of this analysis, revenues of the wholly-owned subsidiaries were consolidated and revenues of Acme Grating, a controlled company, were attributed to Corvis in proportion to Corvis' interests in Acme Grating. Corvis uses the equity method of accounting for Acme Grating, which under Generally Accepted Accounting Principles (''GAAP'') means that Acme Gratings' income or losses, but not revenues, are attributed to Corvis based on its ownership of Acme Grating. Acme Grating provided less than .1% of Corvis' total revenues. Corvis consolidates its wholly-owned subsidiaries, including US Capital, when preparing its financial statements in accordance with GAAP.

20%. Corvis represents that it does not intend to derive a significant percentage of its revenues from income derived from the sale of interest in non-controlled companies.

7. Corvis thus asserts that it satisfies the standards for an order under section 3(b)(2) of the Act.

Applicant's Conditions

Applicant agrees that any order granting the requested relief will be subject to the following conditions:

1. Corvis will continue to allocate and utilize its accumulated cash and Capital Preservation Investments, whether held directly or through US Capital, for bona fide business purposes.

2. Corvis will not engage in trading in securities, either directly or through any of its subsidiaries, for short-term speculative purposes.

For the Commission, by the Division of Investment Management, under delegated authority.

Margaret H. McFarland,

Deputy Secretary.

[FR Doc. 02–27223 Filed 10–24–02; 8:45 am]

BILLING CODE 8010–01–M

SECURITIES AND EXCHANGE COMMISSION

Sunshine Act Meetings

Notice is hereby given, pursuant to the provisions of the Government in the Sunshine Act, Public Law 94–409, that the Securities and ExchangeCommission will hold the following meetings during the week of October 28, 2002:

A Closed Meeting will be held on Monday, October 28, 2002, at 10 a.m., and Open Meetings will be held on Wednesday, October 30, 2002 at 10 a.m., and Thursday, October 31, 2002 at 10 a.m.

Commissioner Campos, as duty officer, determined that no earlier notice thereof was possible.

Commissioners, Counsel to the Commissioners, the Secretary to the Commission, and recording secretaries will attend the Closed Meeting. Certain staff members who have an interest in the matters may also be present.

The General Counsel of the Commission, or his designee, has certified that, in his opinion, one or more of the exemptions set forth in 5 U.S.C. 552b(c)(3), (5), (7), (9)(B) and (10) and 17 CFR 200.402(a)(3), (5), (7), (9)(ii) and (10), permit consideration of the scheduled matters at the Closed Meeting.

The subject matter of the Closed Meeting scheduled for Monday, October 28, 2002 will be:

Formal order of investigation;

Institution and settlement of administrative proceedings of an enforcement nature;

Institution and settlement of injunctive actions; and

Adjudicatory matter.

The subject matter of the Open Meeting scheduled for Wednesday, October 30, 2002 will be:

1. The Commission will consider proposing new rules and amendments regarding the use of pro forma financial information in order to implement section 401(b) of the Sarbanes-Oxley Act of 2002. In addition, the Commission will consider an amendment to Form 8-K requiring the filing of earnings announcements and releases.

2. The Commission will consider whether to propose rules relating to section 401(a) of the Sarbanes-Oxley Act of 2002. The proposed rules would require companies to provide in their ''Management's Discussion and Analysis'' section of the Commission filings: (a) A discussion of off-balance sheet arrangements; (b) a table of aggregate contractual obligations due in short and long-term time horizons; and (c) either a table or textual disclosure of aggregate contingent liabilities and commitments in the short and long-term.

3. The Commission will consider whether to propose new rules that would prohibit an issuer's directors and executive officers from purchasing, selling or otherwise acquiring or transferring any equity security of the issuer during a pension plan blackout period that prevents plan participants or beneficiaries from engaging in equity securities transactions, if the equity security was acquired in connection with the director or executive officer's service or employment as a director or executive officer. These rules would implement section 306(a) of the Sarbanes-Oxley Act of 2002. In addition, the proposed rules would require issuers to provide advance notice to their directors and executive officers and the Commission of the imposition of a pension plan blackout period.

The subject matter of the Open Meeting scheduled for Thursday, October 31, 2002 will be:

1. The Commission will consider whether to propose amendments to the definition of terms used in the exception from the definition of dealer for banks under section 3(a)(5) of the Securities Exchange Act of 1934. The Commission will consider whether to propose amendments to the related exemption for banks, savings associations, and savings banks as well as propose a new exemption concerning securities lending. These proposals relate to the implementation of the specific exceptions for banks from the definitions of ''broker'' and ''dealer'' that were amended by the Gramm-Leach-Bliley Act.

2. The Commission will consider proposed rules establishing standards of professional conduct for attorneys who appear and practice before the Commission in any way in the representation of issuers, as required by section 307 of the Sarbanes-Oxley Act of 2002. These standards would include a rule requiring an attorney to report ''evidence of a material violation of securities laws or breach of fiduciary duty or similar violation by the company or any agent thereof'' to the chief legal counsel or the chief executive officer of the company (or the equivalent); and, if they do not respond appropriately to the evidence, requiring the attorney to report the evidence to the audit committee, another committee of independent directors, or the full board of directors.

At times, changes in Commission priorities require alterations in the scheduling of meeting items. For further information and to ascertain what, if any, matters have been added, deleted or postponed, please contact: The Office of the Secretary at (202) 942–7070.

Dated: October 23, 2002.

Margaret H. McFarland,

Deputy Secretary.

[FR Doc. 02–27349 Filed 10–23–02; 10:47 am]

BILLING CODE 8010–01–P

SECURITIES AND EXCHANGE COMMISSION

[Release No. 34–46620A; File No. SR–NYSE–2002–46]

Self-Regulatory Organizations; Notice of Filing of Proposed Rule Change by the New York Stock Exchange, Inc. Relating to Shareholder Approval of Equity Compensation Plans and the Voting of Proxies

October 21, 2002.

Correction

In FR Document No. 02–26037, beginning on page 63486 in the issue for Friday, October 11, 2002, the word ''less'' in footnote 10 should be changed to ''greater.'' Footnote 10 should read as follows:

[10] For these purposes, a ''repricing'' means any of the following (or any other action that has the same effect as any of the following): (1) Amending the terms of an option after it is granted to lower its strike price; (2) any other action that is treated as a repricing under generally accepted accounting principles; and (3) canceling an option at a

time when its strike price is equal to or greater than the fair market value of the underlying stock, in exchange for another option, restricted stock, or other equity, unless the cancellation and exchange occurs in connection with a merger, acquisition, spin-off or other similar corporate transaction. A cancellation and exchange described in clause (3) of the preceding sentence will be considered a repricing regardless of whether the option, restricted stock or other equity is delivered 2 simultaneously with the cancellation, regardless of whether it is treated as a repricing under generally accepted accounting principles, and regardless of whether it is voluntary on the part of the option holder.

For the Commission by the Division of Market Regulation, pursuant to delegated authority.[1]

Margaret H. McFarland,

Deputy Secretary.

[FR Doc. 02–27225 Filed 10–24–02; 8:45 am]

BILLING CODE 8010–01–P

SECURITIES AND EXCHANGE COMMISSION

[Release No. 34–46684; File No. SR–PCX–2002–69]

Self-Regulatory Organizations; Notice of Filing and Immediate Effectiveness of Proposed Rule Change by the Pacific Exchange, Inc. To Adopt a New Interpretation Under PCXE Rule 7.37 in Securities Subject to the ITS Plan Exemption

October 17, 2002.

Pursuant to Section 19(b)(1) of the Securities Exchange Act of 1934 (''Act''),[1] and Rule 19b–4 thereunder,[2] notice is hereby given that on October 15, 2002, the Pacific Exchange, Inc. (''PCX'' or ''Exchange'') filed with the Securities and Exchange Commission (''SEC'' or ''Commission'') the proposed rule change as described in Items I, II, and III below, which Items have been prepared by PCX. PCX filed the proposed rule change pursuant to Section 19(b)(3)(A) of the Act[3] and Rule 19b–4(f)(6) thereunder,[4] which renders the proposal effective upon filing with the Commission. The Commission is publishing this notice to solicit comments on the proposed rule change from interested persons.

[1] 17 CFR 200.30–2(a)(12).

[1] 15 U.S.C. 78s(b)(1).

[2] 17 CFR 240.19b–4.

[3] 15 U.S.C. 78s(b)(3)(A).

[4] 17 CFR 240.19b–4(f)(6).

I. Self-Regulatory Organization's Statement of the Terms of Substance of the Proposed Rule Change

The Exchange, through its wholly owned subsidiary PCX Equities, Inc. (''PCXE''), proposes to amend certain rules governing the Archipelago Exchange (''ArcaEx''), the equities trading facility of PCXE, to conform to the Commission's order granting a *de minimis* exemption from the trade-through restrictions of the Intermarket Trading System (''ITS'') Plan in certain exchange-traded funds (''ETFs''). Below is the text of the proposed rule change. New text is in *italics,* while deletions appear in [brackets].

* * * * *

PCX Equities, Inc.

Rule 7—Equities Trading Orders and Modifiers

Rule 7.31(a)–(d)—No change.

(e) Immediate-or-Cancel Order. A market or limit order that is to be executed in whole or in part as soon as such order is received, and the portion not so executed is to be treated as canceled. *An immediate-or-cancel order for Trade-Through Exempt Securities (as defined in Rule 7.37) will be permitted to trade at a price no more than three cents ($0.03) away from the NBBO displayed in the Consolidated Quote.*

(f)–(u)—No change.

(v) NOW Order. A Limited Price Order that is to be executed in whole or in part on the Corporation, and the portion not so executed shall be routed pursuant to Rule 7.37(d) only to one or more NOW Recipients for immediate execution as soon as the order is received by the NOW Recipient. Any portion not immediately executed by the NOW Recipient shall be cancelled. If a NOW Order is not marketable when it is submitted to the Corporation, it shall be cancelled. *NOW Orders may not be Directed Orders. NOW Orders for Trade-Through Exempt Securities (as defined in Rule 7.37) may be routed and executed at a price that is no more than three cents ($0.03) away from the NBBO displayed in the Consolidated Quote.*

(w) PNP Order (Post No Preference). A limit order to buy or sell that is to be executed in whole or in part on the Corporation, and the portion not so executed is to be ranked in the Arca Book, without routing any portion of the order to another market center; provided, however, the Corporation shall cancel a PNP Order that would lock or cross the NBBO. *PNP Orders for Trade-Through Exempt Securities (as defined in Rule 7.37) will not be canceled at the time of order entry if such orders would lock or cross the NBBO. PNP Orders in Trade-Through Exempt Securities may be executed at a price no more than three cents ($0.03) away from the NBBO displayed in the Consolidated Quote.*

(x)—No change.

* * * * *

Order Execution

Rule 7.37. Subject to the restrictions on short sales under Rule 10a–1 under the Exchange Act, like-priced orders, bids and offers shall be matched for execution by following Steps 1 through 5 in this Rule; provided, however, for an execution to occur in any Order Process, the price must be equal to or better than the NBBO, unless the Archipelago Exchange has routed orders to [all] away markets at the NBBO, where applicable (however, a User may submit a NOW Order or Primary Only Order that may be routed to an away market without consideration of the NBBO). *This rule will not apply to securities that are subject to an exemption from the Commission under SEC Rule 11Aa3–2(f) to the trade-through provisions of the ITS Plan (''Trade-Through Exempt Securities''). Orders in Trade-Through Exempt Securities designated as IOC, NOW and PNP orders will be effected at a price no more than three cents ($0.03) away from the best bid and offer quoted in CQS.*

(a)–(e)—No change.

* * * * *

II. Self-Regulatory Organization's Statement of the Purpose of, and Statutory Basis for, the Proposed Rule Change

In its filing with the Commission, PCX included statements concerning the purpose of and basis for the proposed rule change and discussed any comments it received on the proposed rule change. The text of these statements may be examined at the places specified in Item IV below. The PCX has prepared summaries, set forth in sections A, B, and C below, of the most significant aspects of such statements.

A. Self-Regulatory Organization's Statement of the Purpose of, and Statutory Basis for, the Proposed Rule Change

1. Purpose

On August 28, 2002, the Securities and Exchange Commission issued an order granting a *de minimis* exemption from the trade-through restrictions of the Intermarket Trading System (''ITS'') Plan in exchange-traded funds (''ETFs'') tracking the Nasdaq-100 Index (''QQQ''), the Standard & Poor's 500 Index

(''SPY''), and the Dow Jones Industrial Average (''DIA'') (the ''Order'').[5] The exemption became operative on September 4, 2002, and covers transactions in the aforementioned ETFs that are executed no more than three cents ($0.03) away from the national best bid and offer (''NBBO'') displayed in the Consolidated Quote. As a result of the Commission's Order, the Exchange proposes to make conforming changes to certain rules governing the ArcaEx trading facility. The proposed rule changes are summarized below.

The Exchange's current rules governing the order execution processes for orders in the ArcaEx Book [6] are set forth in PCXE Rule 7.37. Presently, Rule 7.37 provides, in part, that for an execution to occur in any Order Process, the price must be equal to or better than the NBBO. The Exchange is proposing to add interpretive language to make it clear to ETP Holders and Sponsored Participants (collectively ''Users'') that the requirements of this Rule will not apply to orders designated as Immediate-or-Cancel (''IOC''), NOW and Post No Preference (''PNP'') in securities that are subject to an exemption from the Commission under SEC Rule 11Aa3–2(f) to the trade-through provisions of the ITS Plan, provided, however, that any resulting executions will be at a price no more than three cents $0.03 away from the national best bid and offer (''NBBO'') displayed in the Consolidated Quote.

The Exchange is also proposing to amend the definitions of certain order types, as follows: First, the Exchange is proposing to modify the definition of the IOC Order as set forth in PCXE Rule 7.31(e) by adding the following text: ''An immediate-or-cancel order for Trade-Through Exempt Securities (as defined in Rule 7.37) will be permitted to trade at a price no more than three cents ($0.03) away from the NBBO displayed in the Consolidated Quote.'' Second, the Exchange is proposing to amend Rule 7.31(v) relating to NOW Orders by adding the following text: ''NOW Orders for Trade-Through Exempt Securities (as defined in Rule 7.37) may be routed and executed at a price that is no more than three cents ($0.03) away from the NBBO displayed in the Consolidated Quote.'' Finally, the Exchange proposes to amend the definition of the PNP Order as set forth in PCXE Rule 7.31(w) by adding the following text: ''PNP Orders for Trade-Through Exempt Securities (as defined in Rule 7.37) will not be canceled at the time of order entry if such orders would lock or cross the NBBO. PNP Orders in Trade-Through Exempt Securities may be executed at a price no more than three cents ($0.03) away from the NBBO displayed in the Consolidated Quote.''

The Exchange believes that these proposed rule changes are consistent with the terms and spirit of the Commission's Order and will allow market participants to benefit from this exemption.

2. Statutory Basis

The Exchange believes that the proposed rule change is consistent with Section 6(b) [7] of the Act, in general, and further the objectives of Section 6(b)(5),[8] in particular, because it is designed to promote just and equitable principles of trade, to foster cooperation and coordination with persons engaged in facilitating transactions in securities, and to remove impediments and perfect the mechanisms of a free and open market and to protect investors and the public interest.

B. Self-Regulatory Organization's Statement on Burden on Competition

The Exchange does not believe that the proposed rule change will impose any burden on competition that is not necessary or appropriate in furtherance of the purposes of the Act.

C. Self-Regulatory Organization's Statement on Comments on the Proposed Rule Change Received From Members, Participants or Others

Written comments on the proposed rule change were neither solicited nor received.

III. Date of Effectiveness of the Proposed Rule Change and Timing for Commission Action

The PCX has designated the proposed rule change as one that: (i) Does not significantly affect the protection of investors or the public interest; (ii) does not impose any significant burden on competition; and (iii) does not become operative for 30 days from the date on which it was filed, or such shorter time as the Commission may designate. Therefore, the foregoing rule change has become effective pursuant to Section 19(b)(3)(A) of the Act [9] and Rule 19b–4(f)(6) thereunder.[10] At any time within 60 days of the filing of the proposed rule change, the Commission may summarily abrogate the rule change if it appears to the Commission that the action is necessary or appropriate in the public interest, for the protection of investors, or would otherwise further the purposes of the Act.

Pursuant to Rule 19b–4(f)(6)(iii) under the Act,[11] the proposal may not become operative for 30 days after the date of its filing, or such shorter time as the Commission may designate if consistent with the protection of investors and the public interest, and the self-regulatory organization must file notice of its intent to file the proposed rule change at least five business days beforehand. The PCX has requested that the Commission waive the five-day pre-filing requirement and the 30-day operative delay so that the proposed rule change will become immediately effective upon filing.

The Commission believes that waiving the five-day pre-filing provision and the 30-day operative delay is consistent with the protection of investors and the public interest.[12] Waiving the pre-filing requirement and accelerating the operative date will provide investors increased liquidity and increased choice of execution venues while limiting the possibility that investors will receive significantly inferior prices. For these reasons, the Commission designates that the proposed rule change as effective and operative immediately.

IV. Solicitation of Comments

Interested persons are invited to submit written data, views and arguments concerning the foregoing, including whether the proposed rule change is consistent with the Act. Persons making written submissions should file six copies thereof with the Secretary, Securities and Exchange Commission, 450 Fifth Street, NW., Washington, DC 20549–0609. Copies of the submission, all subsequent amendments, all written statements with respect to the proposed rule change that are filed with the Commission, and all written communications relating to the proposed rule change between the Commission and any person, other than those that may be withheld from the

[5] *See* Securities Exchange Act Release No. 46428 (August 28, 2002), 67 FR 56607 (September 27, 2002).

[6] ArcaEx maintains an electronic file of orders, called the ArcaEx Book, through which orders are displayed and matched. The ArcaEx Book is divided into four components, called processes—the Directed Order Process, the Display Order Process, the Working Order Process, and the Tracking Order Process. *See* PCXE Rule 7.37 for a detailed description of these order execution processes.

[7] 15 U.S.C. 78f(b).

[8] 15 U.S.C. 78f(b)(5).

[9] 15 U.S.C. 78s(b)(3)(A).

[10] 17 CFR 240.19b–4(f)(6).

[11] 17 CFR 240.19b–4(f)(6)(iii).

[12] For purposes of accelerating the operative date of this proposal, the Commission has considered the proposed rule's impact on efficiency, competition, and capital formation. 15 U.S.C. 78c(f).

public in accordance with the provisions of 5 U.S.C. 552, will be available for inspection and copying in the Commission's Public Reference Room. Copies of such filing will also be available for inspection and copying at the principal office of the PCX. All submissions should refer to File No. PCX–2002–69 and should be submitted by November 15, 2002.

For the Commission, by the Division of Market Regulation, pursuant to delegated authority.[13]

Margaret H. McFarland,

Deputy Secretary.

[FR Doc. 02–27226 Filed 10–24–02; 8:45 am]

BILLING CODE 8010–01–P

[13] 17 CFR 200.30–3(a)(12).

SOCIAL SECURITY ADMINISTRATION

Cost-of-Living Increase and Other Determinations for 2003

AGENCY: Social Security Administration.

ACTION: Notice.

SUMMARY: The Commissioner has determined—

(1) A 1.4 percent cost-of-living increase in Social Security benefits under title II of the Social Security Act (the Act), effective for December 2002;

(2) An increase in the Federal Supplemental Security Income (SSI) monthly benefit amounts under title XVI of the Act for 2003 to $552 for an eligible individual, $829 for an eligible individual with an eligible spouse, and $277 for an essential person;

(3) The student earned income exclusion to be $1,340 per month in 2003 but not more than $5,410 in all of 2003;

(4) The dollar fee limit for services performed as a representative payee to be $30 per month ($58 per month in the case of a beneficiary who is disabled and has an alcoholism or drug addiction condition that leaves him or her incapable of managing benefits) in 2003;

(5) The national average wage index for 2001 to be $32,921.92;

(6) The Old-Age, Survivors, and Disability Insurance (OASDI) contribution and benefit base to be $87,000 for remuneration paid in 2003 and self-employment income earned in taxable years beginning in 2003;

(7) The monthly exempt amounts under the Social Security retirement earnings test for taxable years ending in calendar year 2003 to be $960 and $2,560;

(8) The dollar amounts (''bend points'') used in the Primary Insurance Amount benefit formula for workers who become eligible for benefits, or who die before becoming eligible, in 2003 to be $606 and $3,653;

(9) The dollar amounts (''bend points'') used in the formula for computing maximum family benefits for workers who become eligible for benefits, or who die before becoming eligible, in 2003 to be $774, $1,118, and $1,458;

(10) The amount of taxable earnings a person must have to be credited with a quarter of coverage in 2003 to be $890;

(11) The ''old-law'' contribution and benefit base to be $64,500 for 2003;

(12) The monthly amount deemed to constitute substantial gainful activity for statutorily blind individuals in 2003 to be $1,330, and the corresponding amount for non-blind disabled persons to be $800;

(13) The earnings threshold establishing a month as a part of a trial work period to be $570 for 2003; and

(14) Coverage thresholds for 2003 to be $1,400 for domestic workers and $1,200 for election workers.

FOR FURTHER INFORMATION CONTACT: Jeffrey L. Kunkel, Office of the Chief Actuary, Social Security Administration, 6401 Security Boulevard, Baltimore, MD 21235–6401, (410) 965–3013. Information relating to this announcement is available on our Internet site at *http://www.ssa.gov/OACT/COLA/index.html.* For information on eligibility or filing for benefits, call our national toll-free number 1–800–772–1213 or TTY 1–800–325–0778, or visit our Internet site, Social Security Online, at *http://www.ssa.gov.*

SUPPLEMENTARY INFORMATION: In accordance with the Act, the Commissioner must publish within 45 days after the close of the third calendar quarter of 2002 the benefit increase percentage and the revised table of ''special minimum'' benefits (section 215(i)(2)(D)). Also, the Commissioner must publish on or before November 1 the national average wage index for 2001 (section 215(a)(1)(D)), the OASDI fund ratio for 2002 (section 215(i)(2)(C)(ii)), the OASDI contribution and benefit base for 2003 (section 230(a)), the amount of earnings required to be credited with a quarter of coverage in 2003 (section 213(d)(2)), the monthly exempt amounts under the Social Security retirement earnings test for 2003 (section 203(f)(8)(A)), the formula for computing a primary insurance amount for workers who first become eligible for benefits or die in 2003 (section 215(a)(1)(D)), and the formula for computing the maximum amount of benefits payable to the family of a worker who first becomes eligible for old-age benefits or dies in 2003 (section 203(a)(2)(C)).

Cost-of-Living Increases

General

The next cost-of-living increase, or automatic benefit increase, is 1.4 percent for benefits under titles II and XVI of the Act. Under title II, OASDI benefits will increase by 1.4 percent for individuals eligible for December 2002 benefits, payable in January 2003. This increase is based on the authority contained in section 215(i) of the Act (42 U.S.C. 415(i)).

Under title XVI, Federal SSI payment levels will also increase by 1.4 percent effective for payments made for the month of January 2003 but paid on December 31, 2002. This is based on the authority contained in section 1617 of the Act (42 U.S.C. 1382f).

Automatic Benefit Increase Computation

Under section 215(i) of the Act, the third calendar quarter of 2002 is a cost-of-living computation quarter for all the purposes of the Act. The Commissioner is, therefore, required to increase benefits, effective for December 2002, for individuals entitled under section 227 or 228 of the Act, to increase primary insurance amounts of all other individuals entitled under title II of the Act, and to increase maximum benefits payable to a family. For December 2002, the benefit increase is the percentage increase in the Consumer Price Index for Urban Wage Earners and Clerical Workers from the third quarter of 2001 to the third quarter of 2002.

Section 215(i)(1) of the Act provides that the Consumer Price Index for a cost-of-living computation quarter shall be the arithmetic mean of this index for the 3 months in that quarter. We round the arithmetic mean, if necessary, to the nearest 0.1. The Department of Labor's Consumer Price Index for Urban Wage Earners and Clerical Workers for each month in the quarter ending September 30, 2001, is: for July 2001, 173.8; for August 2001, 173.8; and for September 2001, 174.8. The arithmetic mean for this calendar quarter is 174.1. The corresponding Consumer Price Index for each month in the quarter ending September 30, 2002, is: for July 2002, 176.1; for August 2002, 176.6; and for September 2002, 177.0. The arithmetic mean for this calendar quarter is 176.6. Thus, because the Consumer Price Index for the calendar quarter ending September 30, 2002, exceeds that for the calendar quarter ending September 30, 2001 by 1.4 percent (rounded to the

nearest 0.1), a cost-of-living benefit increase of 1.4 percent is effective for benefits under title II of the Act beginning December 2002.

Section 215(i) also specifies that an automatic benefit increase under title II, effective for December of any year, will be limited to the increase in the national average wage index for the prior year if the ''OASDI fund ratio'' for that year is below 20.0 percent. The OASDI fund ratio for a year is the ratio of the combined assets of the Old-Age and Survivors Insurance and Disability Insurance Trust Funds at the beginning of that year to the combined expenditures of these funds during that year. (The expenditures in the ratio's denominator exclude transfer payments between the two trust funds, and reduce any transfers to the Railroad Retirement Account by any transfers from that account into either trust fund.) For 2002, the OASDI fund ratio is assets of $1,212,533 million divided by estimated expenditures of $461,809 million, or 262.6 percent. Because the 262.6-percent OASDI fund ratio exceeds 20.0 percent, the automatic benefit increase for December 2002 is not limited.

Title II Benefit Amounts

In accordance with section 215(i) of the Act, in the case of workers and family members for whom eligibility for benefits (*i.e.*, the worker's attainment of age 62, or disability or death before age 62) occurred before 2003, benefits will increase by 1.4 percent beginning with benefits for December 2002 which are payable in January 2003. In the case of first eligibility after 2002, the 1.4 percent increase will not apply.

For eligibility after 1978, benefits are generally determined using a benefit formula provided by the Social Security Amendments of 1977 (Pub. L. 95–216), as described later in this notice.

For eligibility before 1979, we determine benefits by means of a benefit table. You may obtain a copy of this table by writing to: Social Security Administration, Office of Public Inquiries, Windsor Building, 6401 Security Boulevard, Baltimore, MD 21235–6401. The table is also available on the Internet at address *http://www.ssa.gov/OACT/ProgData/tableForm.html.*

Section 215(i)(2)(D) of the Act requires that, when the Commissioner determines an automatic increase in Social Security benefits, the Commissioner will publish in the **Federal Register** a revision of the range of the primary insurance amounts and corresponding maximum family benefits based on the dollar amount and other provisions described in section 215(a)(1)(C)(i). We refer to these benefits as ''special minimum'' benefits. These benefits are payable to certain individuals with long periods of relatively low earnings. To qualify for such benefits, an individual must have at least 11 ''years of coverage.'' To earn a year of coverage for purposes of the special minimum benefit, a person must earn at least a certain proportion of the ''old-law'' contribution and benefit base (described later in this notice). For years before 1991, the proportion is 25 percent; for years after 1990, it is 15 percent. In accordance with section 215(a)(1)(C)(i), the table below shows the revised range of primary insurance amounts and corresponding maximum family benefit amounts after the 1.4 percent automatic benefit increase.

SPECIAL MINIMUM PRIMARY INSURANCE AMOUNTS AND MAXIMUM FAMILY BENEFITS PAYABLE FOR DECEMBER 2002

Number of years of coverage	Primary insurance amount	Maximum family benefit
11	$30.50	$46.40
12	61.80	93.40
13	93.30	140.40
14	124.40	187.10
15	155.60	233.90
16	186.90	281.20
17	218.40	328.40
18	249.70	375.20
19	280.90	422.20
20	312.20	469.00
21	343.70	516.40
22	374.70	563.10
23	406.50	610.80
24	437.80	657.40
25	469.00	703.90
26	500.70	751.80
27	531.70	798.50
28	563.00	845.30
29	594.30	892.60
30	625.60	939.10

Title XVI Benefit Amounts

In accordance with section 1617 of the Act, maximum SSI Federal benefit amounts for the aged, blind, and disabled will increase by 1.4 percent effective January 2003. For 2002, we derived the monthly benefit amounts for an eligible individual, an eligible individual with an eligible spouse, and for an essential person—$545, $817, and $273, respectively—from corresponding yearly unrounded Federal SSI benefit amounts of $6,541.65, $9,811.37, and $3,278.32. For 2003, these yearly unrounded amounts increase by 1.4 percent to $6,633.23, $9,948.73, and $3,324.22, respectively. Each of these resulting amounts must be rounded, when not a multiple of $12, to the next lower multiple of $12. Accordingly, the corresponding annual amounts, effective for 2003, are $6,624, $9,948, and $3,324. Dividing the yearly amounts by 12 gives the corresponding monthly amounts for 2003—$552, $829, and $277, respectively. In the case of an eligible individual with an eligible spouse, we equally divide the amount payable between the two spouses.

Title VIII of the Act provides for special benefits to certain World War II veterans residing outside the United States. Section 805 provides that ''[t]he benefit under this title payable to a qualified individual for any month shall be in an amount equal to 75 percent of the Federal benefit rate (the maximum amount for an eligible individual) under title XVI for the month, reduced by the amount of the qualified individual's benefit income for the month.'' Thus the monthly benefit for 2003 under this provision is 75 percent of $552, or $414.00.

Student Earned Income Exclusion

A blind or disabled child, who is a student regularly attending school, college, or university, or a course of vocational or technical training, can have limited earnings that are not counted against his or her SSI benefits. The maximum amount of such income that may be excluded in 2002 is $1,320 per month but not more than $5,340 in all of 2002. These amounts increase based on a formula set forth in regulation 20 CFR 416.1112.

To compute each of the monthly and yearly maximum amounts for 2003, we increase the corresponding unrounded amount for 2002 by the latest cost-of-living increase. If the amount so calculated is not a multiple of $10, we round it to the nearest multiple of $10. The unrounded monthly amount for 2002 is $1,323.54. We increase this amount by 1.4 percent to $1,342.07, which we then round to $1,340. Similarly, we increase the unrounded yearly amount for 2002, $5,335.20, by 1.4 percent to $5,409.89 and round this to $5,410. Thus the maximum amount of the income exclusion applicable to a student in 2003 is $1,340 per month but not more than $5,410 in all of 2003.

Fee for Services Performed as a Representative Payee

Sections 205(j)(4)(A)(i) and 1631(a)(2)(D)(i) of the Act permit a qualified organization to collect from an individual a monthly fee for expenses incurred in providing services performed as such individual's representative payee. Currently the fee is limited to the lesser of: (1) 10 percent of the monthly benefit involved; or (2)

$30 per month ($57 per month in any case in which the individual is entitled to disability benefits and the Commissioner has determined that payment to the representative payee would serve the interest of the individual because the individual has an alcoholism or drug addiction condition and is incapable of managing such benefits). The dollar fee limits are subject to increase by the automatic cost-of-living increase, with the resulting amounts rounded to the nearest whole dollar amount. Due to the rounding provision, the current $30 amount remains the same for 2003, while the current $57 increases by 1.4 percent to $58 for 2003.

National Average Wage Index for 2001

General

Under various provisions of the Act, several amounts increase automatically with annual increases in the national average wage index. The amounts are: (1) The OASDI contribution and benefit base; (2) the retirement test exempt amounts; (3) the dollar amounts, or ''bend points,'' in the primary insurance amount and maximum family benefit formulas; (4) the amount of earnings required for a worker to be credited with a quarter of coverage; (5) the ''old-law'' contribution and benefit base (as determined under section 230 of the Act as in effect before the 1977 amendments); (6) the substantial gainful activity amount applicable to statutorily blind individuals; and (7) the coverage threshold for election officials and election workers. Also, section 3121(x) of the Internal Revenue Code requires that the domestic employee coverage threshold be based on changes in the national average wage index.

In addition to the amounts required by statute, two amounts increase automatically under regulatory requirements. The amounts are (1) the substantial gainful activity amount applicable to non-blind disabled persons, and (2) the monthly earnings threshold that establishes a month as part of a trial work period for disabled beneficiaries.

Computation

The determination of the national average wage index for calendar year 2001 is based on the 2000 national average wage index of $32,154.82 announced in the **Federal Register** on October 25, 2001 (66 FR 54047), along with the percentage increase in average wages from 2000 to 2001 measured by annual wage data tabulated by the Social Security Administration (SSA). The wage data tabulated by SSA include contributions to deferred compensation plans, as required by section 209(k) of the Act. The average amounts of wages calculated directly from these data were $30,846.09 and $31,581.97 for 2000 and 2001, respectively. To determine the national average wage index for 2001 at a level that is consistent with the national average wage indexing series for 1951 through 1977 (published December 29, 1978, at 43 FR 61016), we multiply the 2000 national average wage index of $32,154.82 by the percentage increase in average wages from 2000 to 2001 (based on SSA-tabulated wage data) as follows (with the result rounded to the nearest cent).

Amount

The national average wage index for 2001 is $32,154.82 times $31,581.97 divided by $30,846.09, which equals $32,921.92. Therefore, the national average wage index for calendar year 2001 is $32,921.92.

OASDI Contribution and Benefit Base

General

The OASDI contribution and benefit base is $87,000 for remuneration paid in 2003 and self-employment income earned in taxable years beginning in 2003.

The OASDI contribution and benefit base serves two purposes:

(a) It is the maximum annual amount of earnings on which OASDI taxes are paid. The OASDI tax rate for remuneration paid in 2003 is 6.2 percent for employees and employers, each. The OASDI tax rate for self-employment income earned in taxable years beginning in 2003 is 12.4 percent. (The Hospital Insurance tax is due on remuneration, without limitation, paid in 2003, at the rate of 1.45 percent for employees and employers, each, and on self-employment income earned in taxable years beginning in 2003, at the rate of 2.9 percent.)

(b) It is the maximum annual amount of earnings used in determining a person's OASDI benefits.

Computation

Section 230(b) of the Act provides the formula used to determine the OASDI contribution and benefit base. Under the formula, the base for 2003 shall be the larger of: (1) The 1994 base of $60,600 multiplied by the ratio of the national average wage index for 2001 to that for 1992; or (2) the current base ($84,900). If the resulting amount is not a multiple of $300, it shall be rounded to the nearest multiple of $300.

Amount

Multiplying the 1994 OASDI contribution and benefit base amount ($60,600) by the ratio of the national average wage index for 2001 ($32,921.92 as determined above) to that for 1992 ($22,935.42) produces the amount of $86,986.34. We round this amount to $87,000. Because $87,000 exceeds the current base amount of $84,900, the OASDI contribution and benefit base is $87,000 for 2003.

Retirement Earnings Test Exempt Amounts

General

We withhold Social Security benefits when a beneficiary under the normal retirement age (NRA) has earnings in excess of the applicable retirement earnings test exempt amount. (NRA is the age of initial benefit entitlement for which the benefit, before rounding, is equal to the worker's primary insurance amount. The NRA is age 65 for those born before 1938, and it gradually increases to age 67.) A higher exempt amount applies in the year in which a person attains his/her NRA, but only with respect to earnings in months prior to such attainment, and a lower exempt amount applies at all other ages below NRA. Section 203(f)(8)(B) of the Act, as amended by section 102 of Pub. L. 104–121, provides formulas for determining the monthly exempt amounts. The corresponding annual exempt amounts are exactly twelve times the monthly amounts.

For beneficiaries attaining NRA in the year, we withhold $1 in benefits for every $3 of earnings in excess of the annual exempt amount for months prior to such attainment. For all other beneficiaries under NRA, we withhold $1 in benefits for every $2 of earnings in excess of the annual exempt amount.

Computation

Under the formula applicable to beneficiaries who are under NRA and who will not attain NRA in 2003, the lower monthly exempt amount for 2003 shall be the larger of: (1) The 1994 monthly exempt amount multiplied by the ratio of the national average wage index for 2001 to that for 1992; or (2) the 2002 monthly exempt amount ($940). If the resulting amount is not a multiple of $10, it shall be rounded to the nearest multiple of $10.

Under the formula applicable to beneficiaries attaining NRA in 2003, the higher monthly exempt amount for 2003 shall be the larger of: (1) The 2002 monthly exempt amount multiplied by the ratio of the national average wage index for 2001 to that for 2000; or (2) the

2002 monthly exempt amount ($2,500). If the resulting amount is not a multiple of $10, it shall be rounded to the nearest multiple of $10.

Lower Exempt Amount

Multiplying the 1994 retirement earnings test monthly exempt amount of $670 by the ratio of the national average wage index for 2001 ($32,921.92) to that for 1992 ($22,935.42) produces the amount of $961.73. We round this to $960. Because $960 is larger than the corresponding current exempt amount of $940, the lower retirement earnings test monthly exempt amount is $960 for 2003. The corresponding lower annual exempt amount is $11,520 under the retirement earnings test.

Higher Exempt Amount

Multiplying the 2002 retirement earnings test monthly exempt amount of $2,500 by the ratio of the national average wage index for 2001 ($32,921.92) to that for 2000 ($32,154.82) produces the amount of $2,559.64. We round this to $2,560. Because $2,560 is larger than the corresponding current exempt amount of $2,500, the higher retirement earnings test monthly exempt amount is $2,560 for 2003. The corresponding higher annual exempt amount is $30,720 under the retirement earnings test.

Computing Benefits After 1978

General

The Social Security Amendments of 1977 provided a method for computing benefits which generally applies when a worker first becomes eligible for benefits after 1978. This method uses the worker's ''average indexed monthly earnings'' to compute the primary insurance amount. We adjust the computation formula each year to reflect changes in general wage levels, as measured by the national average wage index.

We also adjust, or ''index,'' a worker's earnings to reflect the change in general wage levels that occurred during the worker's years of employment. Such indexation ensures that a worker's future benefit level will reflect the general rise in the standard of living that will occur during his or her working lifetime. To compute the average indexed monthly earnings, we first determine the required number of years of earnings. Then we select that number of years with the highest indexed earnings, add the indexed earnings, and divide the total amount by the total number of months in those years. We then round the resulting average amount down to the next lower dollar amount. The result is the average indexed monthly earnings.

For example, to compute the average indexed monthly earnings for a worker attaining age 62, becoming disabled before age 62, or dying before attaining age 62, in 2003, we divide the national average wage index for 2001, $32,921.92, by the national average wage index for each year prior to 2001 in which the worker had earnings. Then we multiply the actual wages and self-employment income, as defined in section 211(b) of the Act and credited for each year, by the corresponding ratio to obtain the worker's indexed earnings for each year before 2001. We consider any earnings in 2001 or later at face value, without indexing. We then compute the average indexed monthly earnings for determining the worker's primary insurance amount for 2003.

Computing the Primary Insurance Amount

The primary insurance amount is the sum of three separate percentages of portions of the average indexed monthly earnings. In 1979 (the first year the formula was in effect), these portions were the first $180, the amount between $180 and $1,085, and the amount over $1,085. We call the dollar amounts in the formula governing the portions of the average indexed monthly earnings the ''bend points'' of the formula. Thus, the bend points for 1979 were $180 and $1,085.

To obtain the bend points for 2003, we multiply each of the 1979 bend-point amounts by the ratio of the national average wage index for 2001 to that average for 1977. We then round these results to the nearest dollar. Multiplying the 1979 amounts of $180 and $1,085 by the ratio of the national average wage index for 2001 ($32,921.92) to that for 1977 ($9,779.44) produces the amounts of $605.96 and $3,652.59. We round these to $606 and $3,653. Accordingly, the portions of the average indexed monthly earnings to be used in 2003 are the first $606, the amount between $606 and $3,653, and the amount over $3,653.

Consequently, for individuals who first become eligible for old-age insurance benefits or disability insurance benefits in 2003, or who die in 2003 before becoming eligible for benefits, their primary insurance amount will be the sum of

(a) 90 percent of the first $606 of their average indexed monthly earnings, plus

(b) 32 percent of their average indexed monthly earnings over $606 and through $3,653, plus

(c) 15 percent of their average indexed monthly earnings over $3,653.

We round this amount to the next lower multiple of $0.10 if it is not already a multiple of $0.10. This formula and the rounding adjustment described above are contained in section 215(a) of the Act (42 U.S.C.415(a)).

Maximum Benefits Payable to a Family

General

The 1977 amendments continued the long established policy of limiting the total monthly benefits that a worker's family may receive based on his or her primary insurance amount. Those amendments also continued the then existing relationship between maximum family benefits and primary insurance amounts but did change the method of computing the maximum amount of benefits that may be paid to a worker's family. The Social Security Disability Amendments of 1980 (Pub.L. 96–265) established a formula for computing the maximum benefits payable to the family of a disabled worker. This formula applies to the family benefits of workers who first become entitled to disability insurance benefits after June 30, 1980, and who first become eligible for these benefits after 1978. For disabled workers initially entitled to disability benefits before July 1980, or whose disability began before 1979, we compute the family maximum payable the same as the old-age and survivor family maximum.

Computing the Old-Age and Survivor Family Maximum

The formula used to compute the family maximum is similar to that used to compute the primary insurance amount. It involves computing the sum of four separate percentages of portions of the worker's primary insurance amount. In 1979, these portions were the first $230, the amount between $230 and $332, the amount between $332 and $433, and the amount over $433. We refer to such dollar amounts in the formula as the ''bend points'' of the family-maximum formula.

To obtain the bend points for 2003, we multiply each of the 1979 bend-point amounts by the ratio of the national average wage index for 2001 to that average for 1977. Then we round this amount to the nearest dollar. Multiplying the amounts of $230, $332, and $433 by the ratio of the national average wage index for 2001 ($32,921.92) to that for 1977 ($9,779.44) produces the amounts of $774.28, $1,117.66, and $1,457.67. We round these amounts to $774, $1,118, and $1,458. Accordingly, the portions of the primary insurance amounts to be used in 2003 are the first $774, the amount

between $774 and $1,118, the amount between $1,118 and $1,458, and the amount over $1,458.

Consequently, for the family of a worker who becomes age 62 or dies in 2003 before age 62, we will compute the total amount of benefits payable to them so that it does not exceed

(a) 150 percent of the first $774 of the worker's primary insurance amount, plus

(b) 272 percent of the worker's primary insurance amount over $774 through $1,118, plus

(c) 134 percent of the worker's primary insurance amount over $1,118 through $1,458, plus

(d) 175 percent of the worker's primary insurance amount over $1,458.

We then round this amount to the next lower multiple of $0.10 if it is not already a multiple of $0.10. This formula and the rounding adjustment described above are contained in section 203(a) of the Act (42 U.S.C.403(a)).

Quarter of Coverage Amount

General

The amount of earnings required for a quarter of coverage in 2003 is $890. A quarter of coverage is the basic unit for determining whether a worker is insured under the Social Security program. For years before 1978, we generally credited an individual with a quarter of coverage for each quarter in which wages of $50 or more were paid, or with 4 quarters of coverage for every taxable year in which $400 or more of self-employment income was earned. Beginning in 1978, employers generally report wages on an annual basis instead of a quarterly basis. With the change to annual reporting, section 352(b) of the Social Security Amendments of 1977 amended section 213(d) of the Act to provide that a quarter of coverage would be credited for each $250 of an individual's total wages and self-employment income for calendar year 1978, up to a maximum of 4 quarters of coverage for the year.

Computation

Under the prescribed formula, the quarter of coverage amount for 2003 shall be the larger of: (1) The 1978 amount of $250 multiplied by the ratio of the national average wage index for 2001 to that for 1976; or (2) the current amount of $870. Section 213(d) further provides that if the resulting amount is not a multiple of $10, it shall be rounded to the nearest multiple of $10.

Quarter of Coverage Amount

Multiplying the 1978 quarter of coverage amount ($250) by the ratio of the national average wage index for 2001 ($32,921.92) to that for 1976 ($9,226.48) produces the amount of $892.05. We then round this amount to $890. Because $890 exceeds the current amount of $870, the quarter of coverage amount is $890 for 2003.

"Old-Law" Contribution and Benefit Base

General

The "old-law" contribution and benefit base for 2003 is $64,500. This is the base that would have been effective under the Act without the enactment of the 1977 amendments. We compute the base under section 230(b) of the Act as it read prior to the 1977 amendments.

The "old-law" contribution and benefit base is used by:

(a) the Railroad Retirement program to determine certain tax liabilities and tier II benefits payable under that program to supplement the tier I payments which correspond to basic Social Security benefits,

(b) the Pension Benefit Guaranty Corporation to determine the maximum amount of pension guaranteed under the Employee Retirement Income Security Act (as stated in section 230(d) of the Social Security Act),

(c) Social Security to determine a year of coverage in computing the special minimum benefit, as described earlier, and

(d) Social Security to determine a year of coverage (acquired whenever earnings equal or exceed 25 percent of the "old-law" base for this purpose only) in computing benefits for persons who are also eligible to receive pensions based on employment not covered under section 210 of the Act.

Computation

The "old-law" contribution and benefit base shall be the larger of: (1) The 1994 "old-law" base ($45,000) multiplied by the ratio of the national average wage index for 2001 to that for 1992; or (2) the current "old-law" base ($63,000). If the resulting amount is not a multiple of $300, it shall be rounded to the nearest multiple of $300.

Amount

Multiplying the 1994 "old-law" contribution and benefit base amount ($45,000) by the ratio of the national average wage index for 2001 ($32,921.92) to that for 1992 ($22,935.42) produces the amount of $64,593.82. We round this amount to $64,500. Because $64,500 exceeds the current amount of $63,000, the "old-law" contribution and benefit base is $64,500 for 2003.

Substantial Gainful Activity Amounts

General

A finding of disability under titles II and XVI of the Act requires that a person, except for a title XVI disabled child, be unable to engage in substantial gainful activity (SGA). (A finding of disability under title XVI for a child is based on a different standard, not related to SGA.) A person who is earning more than a certain monthly amount (net of impairment-related work expenses) is ordinarily considered to be engaging in SGA. The amount of monthly earnings considered as SGA depends on the nature of a person's disability. Section 223(d)(4)(A) of the Act specifies a higher SGA amount for statutorily blind individuals while Federal regulations (20 CFR 404.1574 and 416.974) specify a lower SGA amount for non-blind individuals. Both SGA amounts increase in accordance with increases in the national average wage index.

Computation

The monthly SGA amount for statutorily blind individuals for 2003 shall be the larger of: (1) Such amount for 1994 multiplied by the ratio of the national average wage index for 2001 to that for 1992; or (2) such amount for 2002. The monthly SGA amount for non-blind disabled individuals for 2003 shall be the larger of: (1) Such amount for 2000 multiplied by the ratio of the national average wage index for 2001 to that for 1998; or (2) such amount for 2002. In either case, if the resulting amount is not a multiple of $10, it shall be rounded to the nearest multiple of $10.

SGA Amount for Statutorily Blind Individuals

Multiplying the 1994 monthly SGA amount for statutorily blind individuals ($930) by the ratio of the national average wage index for 2001 ($32,921.92) to that for 1992 ($22,935.42) produces the amount of $1,334.94. We then round this amount to $1,330. Because $1,330 is larger than the current amount of $1,300, the monthly SGA amount for statutorily blind individuals is $1,330 for 2003.

SGA Amount for Non-Blind Disabled Individuals

Multiplying the 2000 monthly SGA amount for non-blind individuals ($700) by the ratio of the national average wage index for 2001 ($32,921.92) to that for 1998 ($28,861.44) produces the amount of $798.48. We then round this amount to $800. Because $800 is larger than the current amount of $780, the monthly

SGA amount for non-blind individuals is $800 for 2003.

Trial Work Period Earnings Threshold

General

During a trial work period, a beneficiary receiving Social Security disability benefits may test his or her ability to work and still be considered disabled. We do not consider services performed during the trial work period as showing that the disability has ended until services have been performed in at least 9 months (not necessarily consecutive) in a rolling 60-month period. In 2002, any month in which earnings exceed $560 is considered a month of services for an individual's trial work period. In 2003, this monthly amount increases to $570.

Computation

The method used to determine the new amount is set forth in our regulations at 20 CFR 404.1592(b). Monthly earnings in 2003, used to determine whether a month is part of a trial work period, is such amount for 2001 multiplied by the ratio of the national average wage index for 2001 to that for 1999, or, if larger, such amount for 2002. If the amount so calculated is not a multiple of $10, we round it to the nearest multiple of $10.

Amount

Multiplying the 2001 monthly earnings threshold ($530) by the ratio of the national average wage index for 2001 ($32,921.92) to that for 1999 ($30,469.84) produces the amount of $572.65. We then round this amount to $570. Because $570 is larger than the current amount of $560, the monthly earnings threshold is $570 for 2003.

Domestic Employee Coverage Threshold

General

The minimum amount a domestic worker must earn so that such earnings are covered under Social Security or Medicare is the domestic employee coverage threshold. For 2003, this threshold is $1,400. Section 3121(x) of the Internal Revenue Code provides the formula for increasing the threshold.

Computation

Under the formula, the domestic employee coverage threshold amount for 2003 shall be equal to the 1995 amount of $1,000 multiplied by the ratio of the national average wage index for 2001 to that for 1993. If the resulting amount is not a multiple of $100, it shall be rounded to the next lower multiple of $100.

Domestic Employee Coverage Threshold Amount

Multiplying the 1995 domestic employee coverage threshold amount ($1,000) by the ratio of the national average wage index for 2001 ($32,921.92) to that for 1993 ($23,132.67) produces the amount of $1,423.18. We then round this amount to $1,400. Accordingly, the domestic employee coverage threshold amount is $1,400 for 2003.

Election Worker Coverage Threshold

General

The minimum amount an election worker must earn so that such earnings are covered under Social Security or Medicare is the election worker coverage threshold. For 2003, this threshold is $1,200. Section 218(c)(8)(B) of the Act provides the formula for increasing the threshold.

Computation

Under the formula, the election worker coverage threshold amount for 2003 shall be equal to the 1999 amount of $1,000 multiplied by the ratio of the national average wage index for 2001 to that for 1997. If the amount so determined is not a multiple of $100, it shall be rounded to the nearest multiple of $100.

Election Worker Coverage Threshold Amount

Multiplying the 1999 election worker coverage threshold amount ($1,000) by the ratio of the national average wage index for 2001 ($32,921.92) compared to that for 1997 ($27,426.00) produces the amount of $1,200.39. We then round this amount to $1,200. Accordingly, the election worker coverage threshold amount is $1,200 for 2003.

(Catalog of Federal Domestic Assistance: Program Nos. 96.001 Social Security-Disability Insurance; 96.002 Social Security-Retirement Insurance; 96.004 Social Security-Survivors Insurance; 96.006 Supplemental Security Income)

Dated: October 18, 2002.

Jo Anne B. Barnhart,

Commissioner of Social Security.

[FR Doc. 02–27203 Filed 10–24–02; 8:45 am]

BILLING CODE 4191–02–P

DEPARTMENT OF STATE

Bureau of Consular Affairs

[Public Notice 4173]

Extension of Certain Foreign Passports Validity

In accordance with section 212(a)(7)(B) of the Immigration and Nationality Act (8 U.S.C. 1182(a)(7)(B)), a nonimmigrant alien who makes an application for a visa or for admission into the United States is required to possess a passport that:

(1) Is valid for a minimum of six months beyond the date of the expiration of the initial period of the alien's admission into the United States or contemplated initial period of stay and,

(2) Authorizes the alien to return to the country from which he or she came, or to proceed to and enter some other country during such period. Because of the foregoing requirement, the governments of certain countries (and other competent authorities) have agreed that their passports will be recognized as valid for the return of the bearer for a period of six months beyond the expiration date specified in the passport, thereby effectively extending the validity period of the foreign passport an additional six months beyond its expiration date, see 22 CFR 41.104(b).

This public notice adds Romania to the list of competent authorities that have provided the necessary assurances to the Government of the United States. This notice also adds Bosnia-Herzegovina, Croatia, Guatemala and Guyana to the list. These countries have had agreements in place for some time, but were inadvertently dropped from the list in previous notices. The updated list of competent authorities that have made the necessary assurances is shown below:

Table of Foreign Passports Recognized for Extended Validity

Algeria
Antigua & Barbuda
Argentina
Australia
Austria
Bahamas, the
Bangladesh
Barbados
Belgium
Bolivia
Bosnia-Herzegovina
Brazil
Canada
Chile
Colombia
Costa Rica

Cote D'ivoire
Croatia
Cuba
Cyprus
Czech Republic
Denmark
Dominica
Dominican Republic
Ecuador
Egypt
El Salvador
Ethiopia
Finland
France
Germany
Greece
Grenada
Guatemala
Guinea
Guyana
Hong Kong (Certificates of identity & passports)
Hungary
Iceland
India
Ireland
Israel
Italy
Jamaica
Sweden
Switzerland
Syria
Taiwan
Thailand
Togo
Trinidad & Tobago
Japan
Jordan
Korea
Kuwait
Laos
Latvia
Lebanon
Liechtenstein
Luxembourg
Macau
Madagascar
Malaysia
Malta
Mauritius
Mexico
Monaco
Netherlands
New Zealand
Nicaragua
Nigeria
Norway
Oman
Pakistan
Panama
Paraguay
Peru
Philippines
Poland
Portugal
Qatar
Romania
Russia
Senegal
Singapore
Slovak Republic
Slovenia
South Africa
Spain
Sri Lanka
St. Kitts & Nevis
St. Lucia
St. Vincent & the Grenadines
Sudan
Suriname
Tunisia
Turkey
United Arab Emirates
United Kingdom
Uruguay
Venezuela
Zimbabwe

Public Notice 4075 of August 6, 2002 published at 67 FR 50973 hereby superseded.

Dated: October 20, 2002.

George C. Lannon,

Acting Assistant Secretary for Consular Affairs, Department of State.

[FR Doc. 02–27232 Filed 10–24–02; 8:45 am]

BILLING CODE 4710–06–U

DEPARTMENT OF STATE

[Public Notice 4177]

Bureau of Educational and Cultural Affairs Request for Grant Proposals: Future Leaders Exchange (FLEX) Disability Reentry Workshop; Notice: Request for Grant Proposals

Summary: The Office of Citizen Exchanges, Youth Programs Division, of the Bureau of Educational and Cultural Affairs announces an open competition for the FLEX Disability Reentry Workshop. Public and private non-profit organizations meeting the provisions described in Internal Revenue Code section 26 U.S.C. 501(c)(3) may submit proposals for the conduct of a special reentry workshop to be held in April 2003 for students with disabilities participating in the 2002/03 Future Leaders Exchange (FLEX) program. Approximately 16–18 students will participate in this workshop. All programs must comply with J–1 visa regulations. Please refer to the Solicitation Package for further information.

Budget Guidelines: Applicants must submit a comprehensive budget for the entire program. Awards may not exceed $35,000. There must be a summary budget as well as breakdowns reflecting both administrative and program budgets. Applicants may provide separate sub-budgets for each program component, phase, location, or activity to provide clarification. Administrative costs should be kept as low as possible. Cost sharing is encouraged. Allowable costs for the program include the following:

(1) Round-trip transportation for participants from their host communities to/from the workshop site.

(2) Daily travel at workshop site location as necessary.

(3) Accommodations and meals for participants during the time of the workshop.

(4) Rental of facilities and equipment.

(5) Fees for relevant excursions and cultural activities.

(6) Honoraria for speakers/trainers, as appropriate.

(7) Necessary reasonable accommodations.

(8) Materials development.

Please refer to the Solicitation Package for complete budget guidelines and formatting instructions.

The Future Leaders Exchange (FLEX) program brings secondary school students from Eurasia to the U.S. for an academic year. During their time in the U.S., FLEX students live with American host families and attend U.S. high schools.

Note: For more information on the FLEX program, you may refer to the Youth Programs Division Web site: [*http://exchanges.state.gov/education/citizens/students.*]

Since 1995, the FLEX program has included a component for students with disabilities. This has been challenging since individuals with disabilities are treated very differently in Eurasia than they are in the U.S. In Eurasia, most disabled young people attend special schools, largely institutions, and being disabled carries a major stigma. Most young, disabled individuals either are ignored by parents who are ashamed of them or are overprotected by parents who are concerned that they cannot function independently.

Generally, FLEX participants with disabilities adjust well to American life and culture and realize the same positive effects as non-disabled participants. However, after having enjoyed the accessibility and other disability supports that exist in the U.S., they frequently are not well-prepared to return to the less disability-friendly environments of their Eurasian home countries. The major purpose of this special reentry workshop is to help prepare them to readjust to their home cultures. It is Bureau policy that recruitment of people with disabilities at every level should be a priority in all sponsored programming. If this is to be done effectively, it becomes equally important to adequately prepare

disabled program participants for the reverse culture shock that is sure to occur when they return home.

Therefore, this workshop should focus on the reentry and transition to home country of each student as a person with a disability, as the students will also be attending other reentry workshops conducted for all FLEX students by their respective placement organizations at the end of the program year. These other workshops will provide more general training for readjustment to their Eurasian home culture. Goals of the disability workshop are: (1) Facilitating readjustment as a person with a disability to a less disability-friendly environment; (2) conducting activities to further develop leadership skills and foster empowerment; (3) providing students with tools that will enable them to do outreach and work in support of disability rights in their home countries.

Announcement Title and Number: All correspondence with the Bureau concerning this RFGP should reference the above title and number ECA/PE/C/PY–03–21.

For Further Information Contact: The Youth Programs Division, Office of Citizen Exchanges, ECA/PE/C/PY, Room 568, U.S. Department of State, 301 4th Street, SW., Washington, DC 20547, telephone: 202/619–6299, fax: 202/619–5311, e-mail: *lbeach@pd.state.gov* to request a Solicitation Package. The Solicitation Package contains detailed award criteria, required application forms, specific budget instructions, and standard guidelines for proposal preparation. Please specify Bureau Program Officer Linda Beach on all other inquiries and correspondence.

Please read the complete **Federal Register** announcement before sending inquiries or submitting proposals. Once the RFGP deadline has passed, Bureau staff may not discuss this competition with applicants until the proposal review process has been completed.

To Download a Solicitation Package Via Internet: The entire Solicitation Package may be downloaded from the Bureau's Web site at *http://exchanges.state.gov/education/RFGPs.* Please read all information before downloading.

Deadline for Proposals: All proposal copies must be received at the Bureau of Educational and Cultural Affairs by 5 p.m. Washington, DC time on Monday, December 16, 2002. Faxed documents will not be accepted at any time. Documents postmarked the due date but received on a later date will not be accepted. Each applicant must ensure that the proposals are received by the above deadline.

Applicants must follow all instructions in the Solicitation Package. The original and seven copies of the application should be sent to: U.S. Department of State, SA–44, Bureau of Educational and Cultural Affairs, Ref.: ECA/PE/C/PY–03–21, Program Management, ECA/EX/PM, Room 534, 301 4th Street, SW., Washington, DC 20547.

Applicants must also submit the ''Executive Summary'' and ''Proposal Narrative'' sections of the proposal on a 3.5″ diskette, formatted for DOS. These documents must be provided in ASCII text (DOS) format with a maximum line length of 65 characters. Applicants are also encouraged to submit proposals as Microsoft Word or Excel documents as well.

Diversity, Freedom and Democracy Guidelines

Pursuant to the Bureau's authorizing legislation, programs must maintain a non-political character and should be balanced and representative of the diversity of American political, social, and cultural life. ''Diversity'' should be interpreted in the broadest sense and encompass differences including, but not limited to ethnicity, race, gender, religion, geographic location, socio-economic status, and physical challenges. Applicants are strongly encouraged to adhere to the advancement of this principle both in program administration and in program content. Please refer to the review criteria under the ''Support for Diversity'' section for specific suggestions on incorporating diversity into the total proposal. Public Law 104–319 provides that ''in carrying out programs of educational and cultural exchange in countries whose people do not fully enjoy freedom and democracy,'' the Bureau ''shall take appropriate steps to provide opportunities for participation in such programs to human rights and democracy leaders of such countries.'' Public Law 106—113 requires that the governments of the countries described above do not have inappropriate influence in the selection process. Proposals should reflect advancement of these goals in their program contents, to the full extent deemed feasible.

Adherence to all Regulations Governing the J Visa

The Bureau of Educational and Cultural Affairs is placing renewed emphasis on the secure and proper administration of Exchange Visitor (J visa) Programs and adherence by grantees and sponsors to all regulations governing the J visa. Therefore, proposals should demonstrate the applicant's capacity to meet all requirements governing the administration of Exchange Visitor Programs as set forth in 22 CFR 6Z, including the oversight of Responsible Officers and Alternate Responsible Officers, screening and selection of program participants, provision of pre-arrival information and orientation to participants, monitoring of participants, proper maintenance and security of forms, record-keeping, reporting and other requirements. ECA will be responsible for issuing DS–2019 forms to participants in this program.

A copy of the complete regulations governing the administration of Exchange Visitor (J) programs is available at *http://exchanges.state.gov* or from: United States Department of State, Office of Exchange Coordination and Designation, ECA/EC/ECD–SA–44, Room 734, 301 4th Street, SW., Washington, DC 20547, Telephone: (202) 401–9810, FAX: (202) 401–9809.

Review Process

The Bureau will acknowledge receipt of all proposals and will review them for technical eligibility. Proposals will be deemed ineligible if they do not fully adhere to the guidelines stated herein and in the Solicitation Package. All eligible proposals will be reviewed by the program office, as well as the Public Diplomacy section overseas, where appropriate. Eligible proposals will be subject to compliance with Federal and Bureau regulations and guidelines and forwarded to Bureau grant panels for advisory review. Proposals may also be reviewed by the Office of the Legal Adviser or by other Department elements. Final funding decisions are at the discretion of the Department of State's Assistant Secretary for Educational and Cultural Affairs. Final technical authority for assistance awards (grants or cooperative agreements) resides with the Bureau's Grants Officer.

Review Criteria

Technically eligible applications will be competitively reviewed according to the criteria stated below. These criteria are not rank ordered and all carry equal weight in the proposal evaluation:

1. Quality of the program idea: Proposals should exhibit originality, substance, precision, and relevance to the Bureau's mission.

2. Program planning and ability to achieve program objectives: Detailed agenda and relevant work plan should demonstrate substantive undertakings

and logistical capacity. Agenda and plan should adhere to the program overview and guidelines described above. Objectives should be reasonable, feasible, and flexible. Proposals should clearly demonstrate how the organization will meet the program's objectives and plan.

3. Support of diversity: Proposals should demonstrate substantive support of the Bureau's policy on diversity. Achievable and relevant features should be cited in both program administration and program content (orientation and wrap-up sessions, program meetings, resource materials and follow-up activities).

4. Institutional capacity: Proposed personnel and institutional resources should be adequate and appropriate to achieve the program or project's goals. Proposing organization should demonstrate it has experience with disability programming and international youth exchange, as well as familiarity with Eurasian culture.

5. Institution's record/Ability: Proposals should demonstrate an institutional record of successful exchange programs, including responsible fiscal management and full compliance with all reporting requirements for past Bureau grants as determined by Bureau Grant Staff. The Bureau will consider the past performance of prior recipients and the demonstrated potential of new applicants.

6. Multiplier effect/Impact: Proposed programs should describe how workshop participants will be motivated and enabled to reach out to other individuals with disabilities in their home countries.

7. Follow-on activities: Proposals should describe how workshop participants would be provided with knowledge and tools that will prepare them to work in support of disability rights in their home countries.

8. Project evaluation: Proposals should include a plan to evaluate the activity's success. A draft survey questionnaire or other technique plus description of a methodology to use to link outcomes to original project objectives are recommended. Successful applicants will be expected to submit a final report after the project has been completed.

9. Cost-effectiveness/Cost Sharing: The overhead and administrative components of the proposal, including salaries and honoraria, should be kept as low as possible. All other items should be necessary and appropriate. Proposals should maximize cost-sharing through other private sector support as well as institutional direct funding contributions.

Authority

Overall grant making authority for this program is contained in the Mutual Educational and Cultural Exchange Act of 1961, Public Law 87–256, as amended, also known as the Fulbright-Hays Act. The purpose of the Act is ''to enable the Government of the United States to increase mutual understanding between the people of the United States and the people of other countries * * *; to strengthen the ties which unite us with other nations by demonstrating the educational and cultural interests, developments, and achievements of the people of the United States and other nations * * * and thus to assist in the development of friendly, sympathetic and peaceful relations between the United States and the other countries of the world.'' The funding authority for the program above is provided through legislation of the FREEDOM Support Act.

Notice

The terms and conditions published in this RFGP are binding and may not be modified by any Bureau representative. Explanatory information provided by the Bureau that contradicts published language will not be binding. Issuance of the RFGP does not constitute an award commitment on the part of the Government. The Bureau reserves the right to reduce, revise, or increase proposal budgets in accordance with the needs of the program and the availability of funds. Awards made will be subject to periodic reporting and evaluation requirements.

Notification

Final awards cannot be made until funds have been appropriated by Congress, allocated and committed through internal Bureau procedures.

Dated: October 21, 2002.

C. Miller Crouch,

Principal Deputy Assistant Secretary, Educational and Cultural Affairs, Department of State.

[FR Doc. 02–27231 Filed 10–24–02; 8:45 am]

BILLING CODE 4710–05–U

DEPARTMENT OF STATE

[Public Notice 4176]

Bureau of Educational and Cultural Affairs Request for Grant Proposals: Islamic Countries Youth Initiative Academic Studies Program

SUMMARY: The Youth Programs Division, Office of Citizen Exchanges of the Bureau of Educational and Cultural Affairs announces an open competition for grants in support of projects to bring to the United States high school students from countries with significant Muslim populations to attend school and live with host families. Public and private non-profit organizations meeting the provisions described in Internal Revenue Code section 26 U.S.C. 501(c)(3) and public institutions may submit proposals to carry out projects for academic semester and year study, as described below.

Program Information

Overview

The goal of the program is to foster a community of shared interests and values developed through better mutual understanding through first-hand participation in an exchange. The objectives are to: Provide the opportunity for young people in selected countries to learn more about American society, people, institutions, values and culture; foster personal ties; enhance American understanding of the foreign students' countries and cultures; and support program alumni to put the knowledge and skills acquired on the exchange to good use in their home countries. The program seeks to select students with leadership potential and to develop their leadership skills while in the U.S. and when they return home.

This initiative is intended to lay a solid foundation for future exchanges by investing in the infrastructure in the U.S. and overseas necessary to ensure fulfillment of the exchange program's objectives. Funding will support pilot semester and year exchanges and incorporate lessons learned into perfecting the model for conducting future programs. Grants will be awarded both to organizations that have the necessary infrastructure and experience conducting academic high school exchange programs with the partner countries, as well as to those that seek to collaborate with the Bureau in building the necessary infrastructure for exchanges with the partner countries where this does not currently exist. The timing of grant awards and the amount of funding for this initiative are subject to the availability of money that will be transferred to the Bureau.

Guidelines

The partner countries for this pilot initiative will be selected based on a number of factors: (1) Foreign policy considerations, (2) a favorable climate for exchange, (3) data collected through an independent research study commissioned by the Bureau, and (4)

the ability of the private sector to administer exchange programs, as demonstrated by the response to this RFGP. The tentative list includes: Afghanistan, Algeria, Bahrain, Bangladesh, Egypt, Ethiopia, India, Indonesia, Jordan, Kuwait, Lebanon, Malaysia, Morocco, Nigeria, Oman, Pakistan, Philippines, Qatar, Saudi Arabia, Senegal, Syria, Tunisia, Turkey, United Arab Emirates, West Bank/Gaza, and Yemen. The Bureau reserves the right to amend this list at any time as conditions change.

There are two phases that will be funded simultaneously. Phase I—As noted above, a portion of the funding will be awarded to organizations that (1) have in place the existing infrastructure in the U.S. and in the partner countries to undertake a program with the required quality features, as outlined in this RFGP and supplementary documents; (2) have a recent track record of successfully conducting high school academic year exchanges with the partner countries; and (3) demonstrate their ability to comply with all requirements for administering federal grants, including the relevant J–1 visa regulations. To be eligible for this phase of the initiative, the grantee organization must be already designated by the Department of State as a secondary school student exchange visitor sponsor. The Bureau expects to be able to make award decisions by April 1, 2003. It is anticipated that participants selected for participation in phase I programs will travel to the U.S. in the summer of 2004 for the 2004–05 academic year. In the unlikely event the grants can be awarded in time to enable an organization to screen, select, orient and place scholarship winners for participation in the 2003–04 academic year, this is a possibility. As an alternative, grant recipients may bring a contingent of students to the U.S. for the spring 2004 semester. Approximately $2,000,000 is available for phase I grants, including funds earmarked for a special project for Indonesia.

Phase II—In the second phase of the program, the Bureau seeks to award grant funding to assist in the establishment of academic year exchanges with countries where no or inadequate capability exists at the present time. The goal is to encourage organizations to form partnerships, consortia, and other arrangements to pool resources that will result in successful exchange activity. J–1 visa designation is not a requirement, but a thorough understanding of the secondary school student exchange visitor regulations is essential. Funding availability is April 1, 2003, the same as in phase I. Because of the longer lead time needed for phase II, exchange participants will not begin their programs before the 2004–05 academic year, at the earliest, and may also participate in the 2005–06 academic year. Approximately $4,500,000 is available for phase II grants.

The following apply to both phases of this program:

1. While the emphasis is on bringing foreign students to the U.S., programs that provide opportunities for American high school students to study in the partner countries for a semester or year are eligible for consideration.

2. The essential components for all academic study projects undertaken with Bureau grant funding are: Collaboration with American embassies overseas in planning and implementing the exchange; an open, merit-based recruitment and selection process; testing for adequate English language ability for foreign participants; in-country pre-departure orientation; placement in schools that are committed to pursuing the program's objectives and will assist the students to be successful in academic, extracurricular and social activities; the ability to maintain on-program support in the students' home and host countries for the duration of the exchange; enhancement programming during the exchange in leadership development, civil society issues (including citizen activism and community service), and cultural enrichment; ongoing orientation and reentry training; community outreach to amplify the impact of the program and promote mutual understanding; and the ability to track and work with alumni to reinforce what was learned on the exchange and help them adjust to their home environments and apply what they acquired to promote the program's goals.

3. All grantees are required to include people with physical disabilities in the exchange.

4. Grant funding will be used to develop cultural orientation materials for use by all organizations that benefit from ECA grants under this initiative. Organizations may submit a proposal to develop these materials as a project by itself or as part of a grant for the exchange component.

5. Collaboration with Department of State efforts and networking with educational, civic, and other organizations to engage public schools and the American public in hosting participants in this program.

6. All exchange participants must travel on J–1 visas using DS2019s issued by the ECA program office under its program designation.

7. Grant funding will be available to pay for a percentage of the students in phase II exchanges to participate in a pre-academic English enhancement and cultural adjustment program, on an as-needed basis.

Please refer to the Solicitation Package for further information, especially the Project Objectives, Goals and Implementation (POGI) and the Proposal Submission Instructions (PSI).

Budget Guidelines

The number of grants awarded under phase I will be determined by the number of competitive proposals judged meritorious. The minimum bid for any organization is the amount needed to sponsor 40 students. There is no maximum bid limit. For phase II, in developing countries where there has been no previous exchange experience, the minimum number of students per country is 40. The objective is to foster the level of programming necessary to sustain an in-country organization in a cost-effective manner. See the POGI for additional budget details. Grants awarded to eligible organizations with less than four years of experience in conducting international exchange programs will be limited to $60,000. The Bureau encourages applicants to provide maximum levels of cost-sharing and funding from private sources in support of its programs.

Announcement Title and Number

All correspondence with the Bureau concerning this RFGP should reference the above title and number ECA/PE/C/PY–03–20.

FOR FURTHER INFORMATION CONTACT: The Youth Programs Division, Office of Citizen Exchanges, Bureau of Educational and Cultural Affairs, U.S. Department of State, 301 4th Street, SW, Washington, DC 20547, 202–619–6299, fax 619–5311, *rpersiko@pd.state.gov* to request the POGI and PSI. These documents contain detailed award criteria, required application forms, specific budget instructions, and standard guidelines for proposal preparation. Please specify Bureau Program Robert Persiko on all inquiries and correspondence.

Please read the complete **Federal Register** announcement before sending inquiries or submitting proposals. Once the RFGP deadline has passed, Bureau staff may not discuss this competition with applicants until the proposal review process has been completed.

To Download a Solicitation Package Via Internet

The entire Solicitation Package may be downloaded from the Bureau's

Website: *http://exchanges.state.gov/education/RFGPs*. Please read all information before downloading.

Deadline for Proposals

All proposal copies must be received at the Bureau of Educational and Cultural Affairs by 5 p.m. Washington, DC time on Monday, December 16, 2002. Faxed documents will not be accepted at any time. Documents postmarked the due date but received on a later date will not be accepted. Each applicant must ensure that the proposals are received by the above deadline.

Applicants must follow all instructions in the Solicitation Package. The original, one fully-tabbed copy, and eight copies with Tabs A–F of the application should be sent to:

U.S. Department of State, SA–44, Bureau of Educational and Cultural Affairs, Ref.: ECA/PE/C/PY–03–20, Program Management, ECA/EX/PM, Room 534, 301 4th Street, SW, Washington, DC 20547.

Applicants must also submit the ''Executive Summary,'' ''Proposal Narrative,'' budget sections and resumes, as well as important appendices, as e-mail attachments in Microsoft Word and Excel to the program office at *rpersiko@pd.state.gov*. The Bureau will transmit these files electronically to the Public Affairs Section at the U.S. embassies for their review, with the goal of reducing the time it takes to get embassy comments for the Bureau's grants review process.

Diversity, Freedom and Democracy Guidelines

Pursuant to the Bureau's authorizing legislation, programs must maintain a non-political character and should be balanced and representative of the diversity of American political, social, and cultural life. ''Diversity'' should be interpreted in the broadest sense and encompass differences including, but not limited to ethnicity, race, gender, religion, geographic location, socio-economic status, and physical challenges. Applicants are strongly encouraged to adhere to the advancement of this principle both in program administration and in program content. Please refer to the review criteria under the ''Support for Diversity'' section for specific suggestions on incorporating diversity into the total proposal. Public Law 104–319 provides that ''in carrying out programs of educational and cultural exchange in countries whose people do not fully enjoy freedom and democracy,'' the Bureau ''shall take appropriate steps to provide opportunities for participation in such programs to human rights and democracy leaders of such countries.'' Public Law 106–113 requires that the governments of the countries described above do not have inappropriate influence in the selection process. Proposals should reflect advancement of these goals in their program contents, to the full extent deemed feasible.

Adherence to All Regulations Governing the J Visa

The Bureau of Educational and Cultural Affairs is placing renewed emphasis on the secure and proper administration of Exchange Visitor (J visa) Programs and adherence by grantees and sponsors to all regulations governing the J visa. Therefore, proposals should demonstrate the applicant's capacity to meet all requirements governing the administration of Exchange Visitor Programs as set forth in 22 CFR 6Z, including the oversight of Responsible Officers and Alternate Responsible Officers, screening and selection of program participants, provision of pre-arrival information and orientation to participants, monitoring of participants, proper maintenance and security of forms, record-keeping, reporting and other requirements. As noted above, ECA will be responsible for issuing DS–2019 forms to participants in this program. A copy of the complete regulations governing the administration of Exchange Visitor (J) programs is available at *http://exchanges.state.gov/education/jexchanges*, or from: United States Department of State, Office of Exchange Coordination and Designation, ECA/EC/ECD–SA–44, Room 734, 301 4th Street, SW., Washington, DC 20547, Telephone: (202) 401–9810, FAX: (202) 401–9809.

Review Process

The Bureau will acknowledge receipt of all proposals and will review them for technical eligibility. Proposals will be deemed ineligible if they do not fully adhere to the guidelines stated herein and in the Solicitation Package. All eligible proposals will be reviewed by the program office, as well as the Public Affairs personnel overseas, where appropriate. Eligible proposals will be subject to compliance with Federal and Bureau regulations and guidelines and forwarded to Bureau grant panels for advisory review. Proposals may also be reviewed by the Office of the Legal Adviser or by other Department elements. Final funding decisions are at the discretion of the Department of State's Assistant Secretary for Educational and Cultural Affairs. Final technical authority for assistance awards resides with the Bureau's Grants Officer.

Review Criteria

Technically eligible applications will be competitively reviewed according to the criteria stated below. The review is an assessment of the proposal's strengths and weaknesses in key areas. These criteria are not rank ordered and all carry equal weight in the proposal evaluation.

1. Quality of the program idea: Proposals should exhibit originality, substance, precision, and relevance to the Bureau's mission and the purposes outlined in the solicitation.

2. Program planning: Detailed agenda and relevant work plan should demonstrate the ability to ensure that the proposed project accomplishes the stated objectives in the desired time frame.

3. Multiplier effect/impact: Proposed programs should strengthen long-term mutual understanding, including maximum sharing of information and establishment of long-term institutional and individual ties both during the exchange and after the participants return home.

4. Support of Diversity: Proposals should demonstrate substantive support of the Bureau's policy on diversity in all program aspects including participants (exchange students and hosts), sending and hosting communities, orientation, and program activities. Proposals should articulate a diversity plan, not just a statement of compliance.

5. Institutional Capacity: Proposed personnel and institutional resources should be adequate and appropriate to achieve the program's goals. Proposals for infrastructure building should convincingly describe the need and the plan to address that need in specific terms (*e.g.*, staffing, staff training, equipping and maintaining an office). The plan should demonstrate a thorough understanding of local requirements for establishing and registering an NGO.

6. Institution's Record/Ability: Proposals should demonstrate an institutional record of successful exchange programs, including responsible fiscal management and full compliance with all reporting requirements for past Bureau grants as determined by Bureau Grant Staff. The Bureau will consider the past performance of prior recipients and the demonstrated potential of new applicants.

7. Follow-on Activities: Proposals should provide a plan for continued contact with returnees to ensure that

they are tracked over time, integrated into alumni associations, and provided opportunities to reinforce what the knowledge and skills they acquired on the exchange and share them with others.

8. Project Evaluation: The Bureau will provide baseline data and standard questionnaires for use in surveying participants and returnees to ensure that data is comparable from one program to another and will facilitate the demonstration of results. The proposal should indicate concurrence with this plan. Applicants may describe any experience conducting results-oriented evaluations. Successful applicants will be expected to submit intermediate reports after each project component is concluded or quarterly, whichever is less frequent.

9. Cost-effectiveness: The overhead and administrative components of the proposal, including salaries and honoraria, should be kept as low as possible. All other items should be necessary and appropriate.

10. Cost-sharing: Proposals should maximize cost-sharing through institutional direct funding contributions, as well as other private sector support.

11. Value to U.S.-Partner Country Relations: Proposed projects should receive positive assessments by the U.S. Department of State's geographic area desk and overseas officers of program need, potential impact, and the feasibility of the implementation plan.

Authority

Overall grant making authority for this program is contained in the Mutual Educational and Cultural Exchange Act of 1961, Pub. L. 87–256, as amended, also known as the Fulbright-Hays Act. The purpose of the Act is ''to enable the Government of the United States to increase mutual understanding between the people of the United States and the people of other countries * * *; to strengthen the ties which unite us with other nations by demonstrating the educational and cultural interests, developments, and achievements of the people of the United States and other nations * * * and thus to assist in the development of friendly, sympathetic and peaceful relations between the United States and the other countries of the world.'' The funding authority for the program above is provided through legislation.

Notice

The terms and conditions published in this RFGP are binding and may not be modified by any Bureau representative. Explanatory information provided by the Bureau that contradicts published language will not be binding. Issuance of the RFGP does not constitute an award commitment on the part of the Government. The Bureau reserves the right to reduce, revise, or increase proposal budgets in accordance with the needs of the program and the availability of funds. Awards made will be subject to periodic reporting and evaluation requirements.

Notification

Final awards cannot be made until funds have been appropriated by Congress, allocated and committed through internal Bureau procedures.

Dated: October 21, 2002.

C. Miller Crouch,

Principal Deputy Assistant Secretary, Bureau of Educational and Cultural Affairs, Department of State.

[FR Doc. 02–27230 Filed 10–24–02; 8:45 am]

BILLING CODE 4710–05–U

DEPARTMENT OF TRANSPORTATION

Federal Aviation Administration

RTCA Special Committee 200/ EUROCAE Working Group 60: Modular Avionics, First Joint Plenary Meeting

AGENCY: Federal Aviation Administration (FAA), DOT.

ACTION: Notice of RTCA Special Committee 200/EUROCAE Working Group 60 meeting.

SUMMARY: The FAA is issuing this notice to advise the public of a meeting of RTCA Special Committee 200/ EUROCAE Working Group 60: Modular Avionics.

DATES: The meeting will be held November 12–14, 2002 staring at 9 a.m.

ADDRESSES: The meeting will be held at EADS Airbus Hamburg-Finkenwerder (AIRBUS Plant, Haus 25, Room, Wintergarten 4th level) Kreetslag 10.21129, Hamburg, Germany.

FOR FURTHER INFORMATION CONTACT: (1) RTCA Secretariat, 1828 L Street, NW., Suite 805, Washington, DC 20036; telephone (202) 833–9339; fax (202) 833–9434; Web site *http://www.rtca.org;* (2) Peter Anders; (e-mail) *peter.aners@airbus.com* (Phone) 49/40 7437 4002.

SUPPLEMENTARY INFORMATION: Pursuant to section 10(a)(2) of the Federal Advisory Committee Act (Pub. L. 92–463, 5 U.S.C., Appendix 2), notice is hereby given for a Special Committee 200/EUROCAE Working Group 60 meeting. *NOTE: You must check in if attending this meeting. The agenda will include:*

- *November 12:*
  - Opening Plenary Session (Welcome and Introductory Remarks, Review Agenda, Review/Approve previous Common Plenary Summary, Review Open Action Items);
  - Brief status of work of Subgroup 1—Introduction, Modular Avionics Overview, Modular Avionics Design and Integration; Subgroup 2—Modular Avionics Systems and Component Certification and Reuse Change Process; and Subgroup 3—Significant Issues;
  - Review and update Final Report outline;
- *November 13:*
  - Subgroups 1–3 form and work in individual meetings;
- *November 14:*
  - Report of Subgroup 1–3 meetings;
  - Closing Plenary Session (Review Action Items, Date and Place of Next meeting, Adjourn).

Attendance is open to the interested public but limited to space availability. With the approval of the chairmen, members of the public may present oral statements at the meeting. Persons wishing to present oral statements at the meeting. Persons wishing to present statements or obtain information should contact the person listed in the **FOR FURTHER INFORMATION CONTACT** section. Members of the public may present a written statement to the committee at any time.

Issued in Washington, DC on October 17, 2002.

Janice L. Peters,

FAA Special Assistant, RTCA Advisory Committee.

[FR Doc. 02–27239 Filed 10–24–02; 8:45 am]

BILLING CODE 4910–13–M

DEPARTMENT OF TRANSPORTATION

Federal Aviation Administration

Notice of Intent To Rule on Application 02–05–C–00–GRB to Impose and Use the Revenue From a Passenger Facility Charge (PFC) at Austin Straubel International Airport, Green Bay, WI

AGENCY: Federal Aviation Administration (FAA), DOT.

ACTION: Notice of intent to rule on application.

SUMMARY: The FAA proposes to rule and invites public comment on the application to impose and use the revenue from a PFC at Austin Straubel International Airport under the provisions of the 49 U.S.C. 40117 and part 158 of the Federal Aviation Regulations (14 CFR part 158).

DATES: Comments must be received on or before November 25, 2002.

ADDRESSES: Comments on this application may be mailed or delivered in triplicate to the FAA at the following address: Minneapolis Airports District Office, 6020 28th Avenue South, Room 102, Minneapolis, MN 55450–2706.

In addition, one copy of any comments submitted to the FAA must be mailed or delivered to Mr. Thomas W. Miller, Airport Director of the Austin Straubel International Airport at the following address: 2077 Airport Drive, Green Bay, WI 54313–5596.

Air carriers and foreign air carriers may submit copies of written comments previously provided to County of Brown under section 158.23 of Part 158.

FOR FURTHER INFORMATION CONTACT: Mr. Daniel J. Millenacker, Program Manager, Federal Aviation Administration, Airports District Office, 6020 28th Avenue South, Room 102, Minneapolis, MN 55450–2706, (612) 713–4359. The application may be reviewed in person at this same location.

SUPPLEMENTARY INFORMATION: The FAA proposes to rule and invites public comment on the application to impose and use the revenue from a PFC at Austin Straubel International Airport under the provisions of the 49 U.S.C. 40117 and part 158 of the Federal Aviation Regulations (14 CFR part 158).

On September 30, 2002, the FAA determined that the application to impose and use the revenue from a PFC submitted by the County of Brown, was substantially complete within the requirements of section 158.25 of part 158. The FAA will approve or disapprove the application, in whole or in part, no later than January 20, 2003.

The following is a brief overview of the application.

Proposed charge effective date: February 1, 2003.

Proposed charge expiration date: January 1, 2016.

Level of the proposed PFC: $4.50.

Total estimated PFC revenue: $23,319,000.

Brief description of proposed project: Air Carrier Terminal Expansion.

Class or classes of air carriers which the public agency has requested not be required to collect PFCs: Air Taxi/Commercial Operators (ATCO).

Any person may inspect the application in person at the FAA office listed above under **FOR FURTHER INFORMATION CONTACT**.

In addition, any person may, upon request, inspect the application, notice and other documents germane to the application in person at the Austin Straubel International Airport, 2077 Airport Drive, Green Bay, WI.

Issued in Des Plaines, Illinois on October 7, 2002.

Mark McClardy,

Manager, Planning and Programming Branch, Airports Division, Great Lakes Region.

[FR Doc. 02–27177 Filed 10–24–02; 8:45 am]

BILLING CODE 4910–13–M

DEPARTMENT OF TRANSPORTATION

Federal Aviation Administration

Notice of intent To Rule on Application 02–06–C–00–DLH To Impose and Use the Revenue From a Passenger Facility Charge (PFC) at Duluth International Airport, Duluth, MN

AGENCY: Federal Aviation Administration (FAA), DOT.

ACTION: Notice of Intent to Rule on Application.

SUMMARY: The FAA proposes to rule and invites public comment on the application to impose and use the revenue from a PFC at Duluth International Airport under the provisions of the 49 U.S.C. 40117 and Part 158 of the Federal Aviation Regulations (14 CFR Part 158).

DATES: Comments must be received on or before November 25, 2002.

ADDRESSES: Comments on this application may be mailed or delivered in triplicate to the FAA at the following address: Minneapolis Airports District Office, 6020 28th Avenue South, Room 102, Minneapolis, Minnesota 55450–2706.

In addition, one copy of any comments submitted to the FAA must be mailed or delivered to Mr. Brian D. Ryks, Executive Director, of the Duluth Airport Authority at the following address: Duluth Airport Authority, Duluth International Airport, 4701 Grinden Drive, Duluth, MN 55811.

Air carriers and foreign air carriers may submit copies of written comments previously provided to the Duluth Airport Authority under section 158.23 of part 158.

FOR FURTHER INFORMATION CONTACT: Mr. Gordon Nelson, Program Manager, Federal Aviation Administration, Airports District Office, 6020 28th Avenue South, Room 102, Minneapolis, Minnesota 55450–2706, telephone (612) 713–4358. The application may be reviewed in person at this same location.

SUPPLEMENTARY INFORMATION: The FAA proposes to rule and invites public comment on the application to impose and use the revenue from a PFC at Duluth International Airport under the provisions of the 49 U.S.C. 40117 and Part 158 of the Federal Aviation Regulations (14 CFR part 158).

On September 23, 2002, the FAA determined that the application to impose and use the revenue form a PFC submitted by the Duluth Airport Authority was substantially complete within the requirements of section 158.25 of Part 158. The FAA will approve or disapprove the application, in whole or in part, no later than December 28, 2002.

The following is a brief overview of the application.

Proposed charge effective date: March 1, 2003.

Proposed charge expiration date: November 1, 2004.

Level of the proposed PFC: $4.50.

Total estimated PFC revenue: $901,280.

Brief description of proposed projects: Preparation of Passenger Facility Charge application; purchase replacement snow removal equipment (SRE); construct SRE and material storage maintenance facility.

Class or classes of air carriers, which the public agency has requested, not be required to collect PFCs: Non-scheduled Part 135 Air Taxi/Commercial Operators (ATCO).

Any person may inspect the application in person at the FAA office listed above under FOR FURTHER INFORMATION CONTACT.

In addition, any person may, upon request, inspect the application, notice and other documents germane to the application in person at the Duluth Airport Authority, 4701 Grinden Drive, Duluth, MN.

Issued in Des Plaines, IL, on October 10, 2002.

Mark McClardy,

Manager, Airports Planning/ Programming Branch, Airports Division, Great Lakes Region.

[FR Doc. 02–27178 Filed 10–24–02; 8:45 am]

BILLING CODE 4910–13–M

DEPARTMENT OF TRANSPORTATION

Maritime Administration

Reports, Forms and Recordkeeping Requirements; Agency Information Collection Activity Under OMB Review

AGENCY: Maritime Administration, DOT.

ACTION: Notice and request for comments.

SUMMARY: In compliance with the Paperwork Reduction Act of 1995 (44 U.S.C. 3501 *et seq.*), this notice announces that the Information Collection abstracted below has been

forwarded to the Office of Management and Budget (OMB) for review and approval. The nature of the information collection is described as well as its expected burden. The **Federal Register** Notice with a 60-day comment period soliciting comments on the following collection of information was published on June 27, 2002. No comments were received.

DATES: Comments must be submitted on or before November 25, 2002.

FOR FURTHER INFORMATION CONTACT: Kathleen Dunn, Maritime Administration, Office of Ports and Domestic Shipping, 400 Seventh Street, Southwest, Washington, DC 20590. Telephone: (202) 366–2307, Fax: (202) 366–6988; or e-mail: *kathleen.dunn@marad.dot.gov.*

SUPPLEMENTARY INFORMATION: Maritime Administration (MARAD).

Title: Application for Waiver of the Coastwise Trade Laws for Small Passenger Vessels.

OMB Control Number: 2133–0529.

Type of Request: Approval of an existing information collection.

Affected Public: Small passenger vessel owners desirous of operating in the coastwise trade.

Form(s): None.

Abstract: Owners of ship vessels desiring waiver of the coastwise trade laws affecting small passenger vessels may file a written application and justification for waiver to the Maritime Administration (MARAD). Since the authority to accept requests for waivers expired September 30, 2002, but may be reauthorized by Congress, MARAD is requesting the Office of Management and Budget (OMB) to approve this information collection on a voluntary basis. Such approval would permit MARAD to accept requests for waivers promptly upon renewal of the waiver authority by Congress. The agency would then review the application and make a determination whether to grant the requested waiver. In addition, upon reauthorization for MARAD to accept waivers, we would request OMB to restore the original approval of this information collection as ''required to obtain or retain benefits.'' This request to OMB would not require additional public notice because such notice is hereby given.

Annual Estimated Burden Hours: 100 hours.

Addressee: Send comments to the Office of Information and Regulatory Affairs, Office of Management and Budget, 725 17th Street, NW, Washington, DC 20503, Attention MARAD Desk Officer.

Comments are Invited on: Whether the proposed collection of information is necessary for the proper performance of the functions of the agency, including whether the information will have practical utility; the accuracy of the agency's estimate of the burden of the proposed information collection; ways to enhance the quality, utility and clarity of the information to be collected; and ways to minimize the burden of the collection of information on respondents, including the use of automated collection techniques or other forms of information technology. A comment to OMB is best assured of having its full effect if OMB receives it within 30 days of publication.

Issued in Washington, DC on October 21, 2002.

Joel C. Richard,

Secretary, Maritime Administration.

[FR Doc. 02–27240 Filed 10–24–02; 8:45 am]

BILLING CODE 4910–81–P

DEPARTMENT OF TRANSPORTATION

Research and Special Programs Administration

Office of Hazardous Materials Safety Notice of Delays in Processing of Exemption Applications

AGENCY: Research and Special Programs Administration, DOT.

ACTION: List of applications delayed more than 180 days.

SUMMARY: In accordance with the requirements of 49 U.S.C. 5117(c), RSPA is publishing the following list of exemption applications that have been in process for 180 days or more. The reason(s) for delay and the expected completion date for action on each application is provided in association with each identified application.

FOR FURTHER INFORMATION CONTACT: J. Suzanne Hedgepeth, Director, Office of Hazardous Materials, Exemptions and Approvals, Research and Special Programs Administration, U.S. Department of Transportation, 400 Seventh Street, SW., Washington, DC 20590–0001, (202) 366–4535.

Key to ''Reasons for Delays''

1. Awaiting additional information from applicant
2. Extensive public comment under review
3. Application is technically complex and is of significant impact or precedent-setting and requires extensive analysis
4. Staff review delayed by other priority issues or volume of exemption applications

Meaning of Application Number Suffixes

N—New application

M—Modification request

PM—Party to application with modification request

Dated: Issues in Washington, DC, on October 10, 2002.

J. Suzanne Hedgepeth,

Director, Office of Hazardous Materials Exemptions and Approvals.

Application No.	Applicant	Reason for delay	Estimated date of completion
New Exemption Application			
11862–N	The BOC Group, Murray Hill, NJ	4	12/31/2002
11927–N	Alaska Marine Lines, Inc., Seattle, WA	4	12/31/2002
12381–N	Ideal Chemical & Supply Co., Memphis, TN	4	12/31/2002
12412–N	Great Western Chemical Company, Portland, OR	4	11/29/2002
12440–N	Luxfer Inc., Riverside, CA	4	12/31/2002
12571–N	Air Products & Chemicals, Inc., Allentown, PA	4	11/29/2002
12648–N	Stress Engineering Services, Inc., Houston, TX	4	12/31/2002
12701–N	Fuel Cell Components & Integrators, Inc., Hauppauge, NY	1	11/29/2002
12706–N	Raufoss Composites AS, Raufoss, NO	4	11/29/2002
12715–N	Arkansas Eastman Division, Eastman Chemical Co., Batesville, AR	4	11/29/2002
12718–N	Weldship Corporation, Bethlehem, PA	4	11/29/2002
12751–N	Defense Technology Corporation, Casper, WY	4	11/29/2002

Application No.	Applicant	Reason for delay	Estimated date of completion
12843–N	United States Enrichment Corporation, Bethesda, MD	4	11/29/2002
12859–N	Atlantic Research Corporation, Gainesville, VA	4	11/29/2002
12867–N	G.L.I. Citergaz, 964 Civray, FR	1	12/31/2002
12902–N	C&S Railroad Corp., Jim Thorpe, PA	4	12/31/2002
12921–N	GATX Rail, Chicago, IL	4	12/29/2002
12929–N	Matheson Tri-Gas, East Rutherford, NJ	4	11/29/2002
12941–N	The Neiman Marcus Group, Longview, TX	4	11/29/2002
12950–N	Walnut Industries, Inc., Bensalem, PA	4	11/29/2002
12960–N	International Fuel Cells, South Windsor, CT	4	11/29/2002
12966–N	Scientific Cylinder Corporation, Englewood, CO	4	11/29/2002
12973–N	Viking Packing Specialist, Tulsa, OK	4	11/29/2002
12990–N	Technifab Products, Inc., Brazil, IN	4	12/31/2002
12991–N	General Plastics Manufacturing Company, Tacoma, WA	4	12/31/2002?≤
4453–M	Dyno Nobel, Inc., Salt Lake City, UT	4	12/31/2002
4884–M	Matheson Tri-Gas East Rutherford, NJ	4	11/29/2002
7060–M	Federal Express Memphis, TN	4	12/31/2002
7277–M	Structural Composites Industries, Pomona, CA	4	12/31/2002
8162–M	Structural Composites Industries Pomona, CA	4	12/31/2002
8308–M	Tradewind Enterprises, Inc., Hillsboro, OR	4	10/31/2002
8308–M	American Courier Express Corporation, Miramar, FL	4	10/31/2002
8495–M	Kidde Aerospace, Wilson, NC	4	11/29/02
8718–M	Structural Composities Industries, Pomona, CA	4	12/31/2002
8723–M	Dyno Nobel, Inc., Salt Lake City, UT	4	12/31/2002
10019–M	Structural Composites Industries, Pomona, CA	4	12/31/2002
10440–M	MASS Systems (A Unit of Ameron Global, Inc.), Baldwin Park, CA	4	10/31/2002
10751–M	Dyno Nobel, Inc., Salt Lake City, UT	4	12/31/2002
11194–M	Carleston Technologies Inc, Pressure Technology Div, Glen Burnie, MD	4	11/29/2002
11327–M	Phoenix Services, Inc., Pasadena, MD	1	11/29/2002
11537–M	JCI Jones Chemicals, Inc., Milford, VA	4	12/31/2002
11579–M	Dyno Nobel, Inc., Salt Lake City, UT	4	12/31/2002
11769–M	Great Western Chemical Company, Portland, OR	4	12/31/2002
11769–M	Great Western Chemical Company, Portland, OR	4	12/31/2002
11769–M	Hydrite Chemical Company, Brookfield, WI	4	12/31/2002
11791–M	The Coleman Company, Inc., Wichita, KS	4	12/31/2002
11850–M	Air Transport Association, Washington, DC	4	11/29/2002
11860–M	GATX Rail, Chicago, IL	4	12/31/2002
11911–M	Transfer Flow, Inc., Chico, CA	4	12/31/2002
19111–M	Transfer Flow, Inc., Chico, CA	4	12/31/2002
12065–M	Petrolab Company, Latham, NY	4	11/29/2002
12443–M	Dow Reichhold Speciality Latex, LLC, Chickamauga, GA	4	11/29/2002
12449–M	Chlorine Service Company, Inc., Kingwood, TX	4	11/29/2002
12599–M	Voltaix, Inc., North Branch, NJ	4	10/31/2002
12866–M	Delta Air Lines (Technical Operations Center), Atlanta, GA	4	11/29/2002

[FR Doc. 02–27167 Filed 10–24–02; 8:45 am]
BILLING CODE 4910–60–M

DEPARTMENT OF TRANSPORTATION

Surface Transportation Board

Agency Information Collection Activities: Proposed Collection(s); Comment Request

AGENCY: Surface Transportation Board, Transportation.

ACTION: 60-day notice and request for comments.

SUMMARY: The Surface Transportation Board (Board), as part of its continuing effort to reduce paperwork burdens, invites comment on the information collection(s) described below, as required by the Paperwork Reduction Act of 1995, 44 U.S.C. Chapter 35 (PRA). Under the PRA, a Federal agency conducting or sponsoring a collection of information must display a currently valid Office of Management and Budget (OMB) control number. ''Collection of information'' is defined in 44 U.S.C. 3502(3) and 5 CFR 1320.3(c) and includes agency requirements that persons submit reports, keep records, or provide information to the agency, third parties, or the public. Under 44 U.S.C. 3506(c)(2)(A), Federal agencies are required to provide a 60-day notice in the **Federal Register** concerning each proposed collection of information, including each proposed extension of an existing collection of information, before submitting the collection to OMB for approval. The Board is publishing this notice to comply with this requirement. We should note that OMB control numbers were obtained in the past for six of the seven collections of information that are the subject of this notice. Comments are requested concerning: (1) Whether the particular collections of information described below are necessary for the proper performance of the functions of the Board, including whether the collections have practical utility; (2) the accuracy of the Board's burden estimates; (3) ways to enhance the quality, utility and clarity of the information collected; and (4) ways to minimize the burden of the collection of information on the respondents, including the use of automated collection techniques or other forms of information technology, when appropriate.

DATES: Written comments are due on December 24, 2002.

ADDRESSES: Written comments (an original plus 1 copy) should be identified as Paperwork Reduction Act

Comments, refer to the title of the specific collection(s) commented upon and be sent to: Anne K. Quinlan, Surface Transportation Board, 1925 K Street, NW, Washington, DC 20423–0001.

FOR FURTHER INFORMATION CONTACT: For additional information or copies of the information collection(s) contact Anne K. Quinlan, (202) 565–1727. [Federal Information Relay Service (FIRS) for the hearing impaired: (800) 877–8339.]

SUPPLEMENTARY INFORMATION:

Collection Number 1

OMB Control Number: 2140–XXXX.

Title: Class I Railroad Annual Report.

Form number: R1.

Type of review: Reinstatement, without change, of a previously approved collection for which OMB control number has expired.

Respondents: Class I railroads.

Number of respondents: Fewer than 10.

Estimated time per response: 800 hours, based on information provided by the railroad industry during the 1990's. This estimate includes time spent reviewing instructions; searching existing data sources; gathering and maintaining the data needed; completing and reviewing the collection of information; and converting the data from the carrier's individual accounting system to the Board's Uniform System of Accounts (USOA), see 49 U.S.C. 11141–43, 11161–64, 49 CFR 1200–1201, for presentation in the R–1 format for consistency of information across all reporting railroads. It is possible that the time required to produce this report is overstated, given the advances in computerized data collection and processing systems.

Frequency of response: Annual.

Total annual hour burden: Less than 8,000 hours annually.

Total annual ''non-hour burden'' cost: We have identified no ''non-hour cost'' burdens associated with this collection.

Needs and uses: Annual reports are required to be filed by Class I railroads under 49 U.S.C. 11145. The reports show operating expenses of the carriers, including those for right-of-way and structures, equipment, train and yard operations and general and administrative expenses. The reports are used by the Board, other Federal agencies and industry groups to monitor and assess railroad industry growth, financial stability, traffic and operations and to identify industry changes that may affect national transportation policy. Information from this report is also entered into the Board Uniform Rail Costing System (URCS), which is a cost measurement methodology. URCS was developed by the Board pursuant to 49 U.S.C. 11161 and is used as a tool in rail rate proceedings to calculate the variable costs associated with providing a particular service in accordance with 49 U.S.C. 10107(d).

The Board uses data from the reports to more effectively carry out its regulatory responsibilities, including acting on railroad requests for authority to engage in Board-regulated financial transactions such as mergers, acquisitions of control, consolidations and abandonments; developing the Uniform Rail Costing System (URCS); conducting rail revenue adequacy proceedings; developing rail cost adjustment factors; and conducting investigations and rulemakings.

Information from certain schedules contained in the reports that are filed is compiled and published on the Board's Web site, *http://www.stb.dot.gov.* Information in these reports is not available from any other source.

Collection Number 2

OMB Control Number: 2140–XXXX.

Title: Quarterly Report of Revenues, Expenses and Income—Railroads (Form RE&I).

Form number: None.

Type of review: Reinstatement, without change, of a previously approved collection for which OMB control number has expired.

Respondents: Class I railroads.

Number of respondents: Fewer than 10.

Estimated time per response: 6 hours.

Frequency of response: Quarterly.

Total annual hour burden: Less than 240 hours annually.

Total annual ''non-hour burden'' cost: We have identified no ''non-hour cost'' burdens associated with this collection.

Needs and uses: This collection is a report of railroad operating revenues, operating expenses and income items; it is a profit and loss statement. *See* 49 CFR 1243.1. It discloses net railway operating income on a quarterly and year-to-date basis for the current and prior year. The Board uses the information in this report to ensure competitive, efficient and safe transportation through general oversight programs that monitor and forecast the financial and operating condition of railroads, and through regulation of railroad rate and service issues and rail restructuring proposals, including railroad mergers, consolidations, acquisitions of control and abandonments. Information from the reports is used by the Board, other Federal agencies and industry groups to monitor and assess industry growth and operations, detect changes in carrier financial stability, and identify trends that may affect the national transportation system. Information from these reports is compiled by the Board and published on its Web site, *http://www.stb.dot.gov*. The information contained in these reports is not available from any other source.

Collection Number 3

OMB Control Number: 2140–XXXX.

Title: Quarterly Condensed Balance Sheet—Railroads (Form CBS).

Form number: None.

Type of review: Reinstatement, without change, of a previously approved collection for which OMB control number has expired.

Respondents: Class I railroads.

Number of respondents: Fewer than 10.

Estimated time per response: 6 hours.

Frequency of response: Quarterly.

Total annual hour burden: Less than 240 hours annually.

Total annual ''non-hour burden'' cost: We have identified no ''non-hour cost'' burdens associated with this collection.

Needs and uses: This collection shows the balance at the end of each quarter, for the current and prior year, of the carrier's assets and liabilities; quarterly and cumulative for the current and prior year, the carrier's gross capital expenditures; and quarterly and cumulative for the current and prior year, the carrier's revenue tons carried. *See* 49 CFR 1243.2. The Board uses the information in this report to ensure competitive, efficient and safe transportation through general oversight programs that monitor and forecast the financial and operating condition of railroads, and through specific regulation of railroad rate and service issues and rail restructuring proposals, including railroad mergers, consolidations, acquisitions of control and abandonments. Information from the reports is used by the Board, other Federal agencies and industry groups to assess industry growth and operations, detect changes in carrier financial stability and identify trends that may affect the National Transportation System. Information from these reports is compiled by the Board and published on its Web site, *http://www.stb.dot.gov*. The information contained in these reports is not available from any other source.

Collection Number 4

OMB Control Number: 2140–XXXX.

Title: Report of Railroad Employees, Service and Compensation—Wage Forms A and B.

Form number: None.

Type of review: Reinstatement, without change, of a previously approved collection for which OMB control number has expired.

Respondents: Class I railroads.

Number of respondents: Fewer than 10.

Estimated time per response: 107 hours, based on information provided by the railroad industry during the 1990's. It is possible that the time required to collect this information is overstated given the advances in computerized data collection and processing systems.

Frequency of response: Quarterly, with an annual summation.

Total annual hour burden: Less than 4,280 hours annually.

Total annual ''non-hour burden'' cost: We have identified no ''non-hour cost'' burdens associated with this collection.

Needs and uses: This collection shows the number of employees, service hours and compensation, by employee group (executive, professional, maintenance-of-way and equipment and transportation), of the reporting railroads. *See* 49 CFR 1245. The information is used by the Board to forecast labor costs and measure the efficiency of the reporting railroads. The information also is used by the Board to evaluate proposed regulated transactions that may impact rail employees, including mergers and consolidations, acquisitions of control, purchases and abandonments. Other Federal agencies and industry groups, including the Railroad Retirement Board, Bureau of Labor Statistics and Association of American Railroads, depend on the information contained in the reports to monitor railroad operations. Certain information from the reports is compiled and published on the Board's Web site, *http://www.stb.dot.gov*. The information contained in the reports is not available from any other source.

Collection Number 5

OMB Control Number: 2140–XXXX.

Title: Monthly Report of Number of Employees of Class I Railroads.

Form number: STB Form 350.

Type of review: Reinstatement, without change, of a previously approved collection for which OMB control number has expired.

Respondents: Class I railroads.

Number of respondents: Fewer than 10.

Estimated time per response: 1.25 hours.

Frequency of response: Monthly.

Total annual hour burden: Less than 150 hours annually.

Total annual ''non-hour burden'' cost: We have identified no ''non-hour cost'' burdens associated with this collection.

Needs and uses: This collection shows, for each reporting carrier, the average number of employees at mid-month in the six job classification groups that encompass all railroad employees. *See* 49 CFR 1246. The information is used by the Board to forecast labor costs and measure the efficiency of the reporting railroads. The information also is used by the Board to evaluate proposed regulated transactions that may impact rail employees, including mergers and consolidations, acquisitions of control, purchases and abandonments. Other Federal agencies and industry groups, including the Railroad Retirement Board, Bureau of Labor Statistics and Association of American Railroads, depend on the information contained in the reports to monitor railroad operations. Certain information from the reports is compiled and published on the Board's Web site, *http://www.stb.dot.gov*. The information contained in the reports is not available from any other source.

Collection Number 6

OMB Control Number: 2140–XXXX.

Title: Annual Report of Cars Loaded and Cars Terminated.

Form number: Form STB–54.

Type of review: Existing collection in use without an OMB control number.

Respondents: Class I railroads.

Number of respondents: Fewer than 10.

Estimated time per response: 4 hours.

Frequency of response: Annual.

Total annual hour burden: Less than 40 hours annually.

Total annual ''non-hour burden'' cost: We have identified no ''non-hour cost'' burdens associated with this collection.

Needs and uses: This collection reports the number of cars loaded and cars terminated on the reporting carrier's line. *See* 49 CFR 1247. Information in this report is entered into the Board's Uniform Rail Costing System (URCS), which is a cost measurement methodology. URCS was developed by the Board pursuant to 49 U.S.C. 11161 and is used as a tool in rail rate proceedings to calculate the variable costs associated with providing a particular service in accordance with 49 U.S.C. 10707(d). The Board also uses URCS to analyze the information that it obtains through the annual railroad industry waybill sample, *see* 49 CFR 1244, and in railroad abandonment proceedings to measure off-branch costs in accordance with 49 CFR 1152.32(n). There is no other source for the information contained in this report.

Collection Number 7

OMB Control Number: 2140–XXXX.

Title: Quarterly Report of Freight Commodity Statistics (Form QCS).

Form number: None.

Type of review: Reinstatement, without change, of a previously approved collection for which OMB control number has expired.

Respondents: Class I railroads.

Number of respondents: Fewer than 10.

Estimated time per response: 217 hours.

Frequency of response: Quarterly, with an annual summation.

Total annual hour burden: Less than 8,680 hours annually.

Total annual ''non-hour burden'' cost: We have identified no ''non-hour cost'' burdens associated with this collection.

Needs and uses: This collection, which is based on information contained in waybills used by railroads in the ordinary course of business, reports car loadings and total revenues by commodity code for each commodity that moved on the railroad during the reporting period. *See* 49 CFR 1248. Information in this report is entered into the Uniform Rail Costing System (URCS), which is a cost-measurement methodology. URCS was developed by the Board pursuant to 49 U.S.C. 11161 and is used in rail rate proceedings as a tool to calculate the variable costs of providing a particular rail service in accordance with 49 U.S.C. 10707(d). The Board also uses URCS to analyze the information that it obtains though the annual railroad waybill sample and in railroad abandonment proceedings to measure off-branch costs in accordance with 49 CFR 1152.32(n). There is no other source for the information contained in this report.

Dated: October 18, 2002.

Vernon A. Williams,

Secretary.

[FR Doc. 02–27216 Filed 10–24–02; 8:45 am]

BILLING CODE 4915–00–P

DEPARTMENT OF TRANSPORTATION

Surface Transportation Board

Release of Waybill Data

The Surface Transportation Board has received a request from Reebie Associates on behalf of the Kansas City Southern Railway (WB595—10/22/02), for permission to use certain data from the Board's Carload Waybill Samples. A copy of the request may be obtained

from the Office of Economics, Environmental Analysis, and Administration.

The waybill sample contains confidential railroad and shipper data; therefore, if any parties object to these requests, they should file their objections with the Director of the Board's Office of Economics, Environmental Analysis, and Administration within 14 calendar days of the date of this notice. The rules for release of waybill data are codified at 49 CFR 1244.8.

FOR FURTHER INFORMATION CONTACT: Mac Frampton, (202) 565–1541.

Vernon A. Williams,

Secretary.

[FR Doc. 02–27217 Filed 10–24–02; 8:45 am]

BILLING CODE 4915–00–P

DEPARTMENT OF THE TREASURY

Federal Law Enforcement Training Center

FLETC Glynco, GA; Notice of Intent

AGENCY: Federal Law Enforcement Training Center, Treasury.

ACTION: Notice of intent to hold public meeting and prepare an environmental assessment.

SUMMARY: Notice is hereby given that the Federal Law Enforcement Training Center (FLETC), pursuant to the National Environmental Policy Act of 1969 (NEPA), the Council on Environmental Quality Regulations for Implementing the National Environmental Policy Act (40 CFR parts 1500–1508), and the Department of the Treasury Directive 75–02 (Department of the Treasury Environmental Quality Program), proposes to prepare an Environmental Assessment related to the limited acquisition of certain public roadways adjacent to the FLETC Glynco, Georgia facility. The proposed action is associated with a previous FLETC action involving the purchase of property and buildings located at the intersection of Sidney Lanier Drive and Ethridge Drive, Brunswick, Georgia, which are adjacent to the existing FLETC site. The action addressed herein includes acquisition of portions of these public roads near their intersection, construction of cul-de-sacs where these public roads are blocked to allow turnarounds, security fencing to connect and incorporate the property and buildings noted above into the perimeter of the adjacent FLETC site, and extension of the current FLETC internal perimeter road. Double leaf security gates will be installed in each cul-de-sac.

Meeting Information: Public participation in the scoping process will be an integral part of this project. During the scoping process the FLETC will seek information, comments, and guidance from agencies and the public that may be interested in, or affected by, this project. The scoping process will include: (a) Identification of potential issues; (b) identification of issues to be analyzed in depth; (c) elimination of insignificant issues; (d) identification of potential environmental effects; (e) exploration of potential alternatives; and (f) determination of potentially involved agencies. The FLETC will conduct a meeting associated with the scoping of the assessment of potential significant environmental impacts related to the project. The meeting will be advertised in a newspaper of general circulation in the project area. The meeting will be open to the interested public, and federal, state, and local government agencies, and will be held on November 7, 2002 from 7 p.m. until 9 p.m. at the Coastal Georgia Community College 3700 Altama Avenue Brunswick, Georgia in the Southeast Georgia Conference Center for Continuing Education Building. The public and agencies are invited to participate in the planning and analysis of the proposed project. Representatives of the FLETC and its consultants will be available at the meeting to discuss the FLETC's environmental review process, describe the project and alternatives under consideration, discuss the scope of environmental issues to be considered in accordance with the requirements of NEPA, and answer questions and written comments.

DATES: Written comments will be accepted until December 8, 2002.

ADDRESSES: *Send comments to:* FLETC, Building T–726, Glynco, GA 31524.

FOR FURTHER INFORMATION CONTACT: Susan Shaw, NEPA Coordinator/Project Manager, FLETC, at (912) 261–4557. Ms. Shaw's e-mail address is *sshaw@fletc.treas.gov*.

SUPPLEMENTARY INFORMATION: The Federal Law Enforcement Training Center has a mission of providing high quality, cost-effective training of federal law enforcement personnel. The Glynco, Georgia FLETC facility is the primary training location for FLETC, with others located in Maryland and New Mexico.

Alternatives being considered by the FLETC for this project include: (a) No Action—Continuation of the present road configuration and public access without security improvements to the buildings; (b) Proposed Action—Acquisition of public roads, inclusion of the buildings into the FLETC site, construction of cul-de-sacs, and construction of perimeter fencing and road; (c) Alternative—Improvements to building security without road acquisition, with continued isolation of the buildings from the contiguous FLETC site.

Based on the input received at the public meeting, and ongoing contact and involvement of the interested agencies and the public, the FLETC will prepare a Draft Environmental Assessment addressing the significance of the project and its impact for public review and comment. Distribution and placement of this document in publicly accessible places such as the regional library and government offices will occur. A Final Environmental Assessment will be prepared considering the comments from agencies and the public received following the review period for the draft document.

Should the FLETC determine, based on the information presented in the Final Environmental Assessment for the project, that the impacts of the acquisition and associated construction will not have a significant environmental impact, it will prepare a Finding of No Significant Impact (FONSI) for publication in the **Federal Register** and in a newspaper of general circulation in the project area. Should significant environmental impacts be determined to exist due to the project, the FLETC will proceed with the preparation of an Environmental Impact Statement, per the requirements of NEPA, the Council on Environmental Quality, and its own environmental policies and procedures.

Authority: The Council on Environmental Quality's National Environmental Policy Act, 40 CFR parts 1500 *et seq.*

Dated: October 21, 2002.

Paul Magalski,

Assistant Director, Office of Compliance, Federal Law Enforcement Training Center.

[FR Doc. 02–27195 Filed 10–24–02; 8:45 am]

BILLING CODE 4810–32–P

Corrections

Federal Register

Vol. 67, No. 207

Friday, October 25, 2002

This section of the FEDERAL REGISTER contains editorial corrections of previously published Presidential, Rule, Proposed Rule, and Notice documents. These corrections are prepared by the Office of the Federal Register. Agency prepared corrections are issued as signed documents and appear in the appropriate document categories elsewhere in the issue.

DEPARTMENT OF COMMERCE

National Oceanic and Atmospheric Administration

Draft Guidance for the Coastal and Estuarine Land Conservation Program

Correction

In notice document 02–26996 beginning on page 64874 in the issue of Tuesday, October 22, 2002, make the following corrections:

1. On page 64874, in the third column, the subject is corrected to read as set forth above.

2. On page 64875, in the first column, in the third and fourth lines, the web address is corrected to read as set forth as follows:

''*www.ocrm.nos.noaa.gov/landconservation.html*''.

3. On the same page, in the same column, in the date line, ''October 7, 2002'' should read, ''October 17, 2002''.

[FR Doc. C2–26996 Filed 10–24–02; 8:45 am]

BILLING CODE 1505–01–D

DEPARTMENT OF ENERGY

Federal Energy Regulatory Commission

[Docket No. CP02–142–001]

Columbia Gas Transmission Corporation; Notice of Petition To Amend

October 11, 2002.

Correction

In notice document 02–26490 beginning on page 64356 in the issue of Friday, October 18, 2002, make the following correction:

On page 64356, in the first column, the docket number is corrected to read as set forth above.

[FR Doc. C2–26490 Filed 10–24–02; 8:45 am]

BILLING CODE 1505–01–D

Federal Register

Friday,
October 25, 2002

Part II

National Credit Union Administration

12 CFR Parts 703 and 704
Investment and Deposit Activities; Corporate Credit Unions; Final Rule

NATIONAL CREDIT UNION ADMINISTRATION

12 CFR Parts 703 and 704

Investment and Deposit Activities; Corporate Credit Unions

AGENCY: National Credit Union Administration (NCUA).

ACTION: Final rule.

SUMMARY: NCUA is issuing final revisions to the rule governing corporate credit unions (corporates). The major revisions to the rule are in the areas of capital, credit concentration limits and services. The amendments enable corporates to remain competitive in the marketplace while retaining NCUA's historic focus on the safety and soundness of the corporate credit union system. The major changes to these areas necessitate some substantive changes to other provisions of the rule. Several other minor revisions are generally either a clarification or a modernization of the existing rule.

DATES: This rule is effective November 25, 2002, except that the revision of the definition ''paid-in capital'' in §704.2 is effective July 1, 2003. Compliance with this rule is not required until January 1, 2003.

FOR FURTHER INFORMATION CONTACT: Kent Buckham, Director, Office of Corporate Credit Unions, 1775 Duke Street, Alexandria, Virginia 22314–3428 or telephone (703) 518–6640; or Mary Rupp, Staff Attorney, Office of General Counsel, at the above address or telephone (703) 518–6540.

SUPPLEMENTARY INFORMATION:

A. Background

On July 28, 1999, and November 22, 2000, NCUA issued advance notices of proposed rulemaking (ANPRs). 64 FR 40787, July 28, 1999; 65 FR 70319, November 22, 2000. Based on the comments received in response to the ANPRs, the Board issued a proposed rule. 66 FR 48742, September 21, 2001. In response to the comments received, particularly in the area of capital, the Board issued a revised proposed rule for another round of public comment. 67 FR 44270, July 1, 2002. The Board received 37 comments on the revised proposal: 22 from corporate credit unions, six from natural person credit unions, four from credit union trade associations, two from bank trade associations, two from state credit union leagues and one from a research firm. The commenters appreciated the Board's willingness to issue a revised proposal. The comments to the revised proposed rule have greatly assisted the Board in drafting the final rule and will be discussed in the relevant section of the section-by-section analysis.

B. Section-by-Section Analysis

Natural Person Credit Union Investments, Section 703.100

As in the initial proposed rule, the Board retained an increase in the limit on a natural person credit union's aggregate purchase of paid-in capital (PIC) and membership capital (MC) in one corporate to 2 percent of the credit union's assets measured at the time of purchase. Additionally, the Board retained the limit on a credit union's aggregate purchase of PIC and MC in all corporates of 4 percent.

Two commenters, both bank trade groups, noted continued opposition to the proposed increase. The commenters argued that it increases exposure to individual credit unions and raises the overall systemic risk. One commenter expressed support for the proposal but indicated the limit should be based on the natural person credit union's net worth rather than on its assets.

The Board remains convinced the revised limits on natural person credit union investments in PIC and MC in an individual corporate and in the aggregate are in the best interest of the credit union system. These changes have been retained in the final rule.

Definitions, Section 704.2

Daily Average Net Assets (DANA)

Although not specifically addressed in the rule, nineteen commenters continued to oppose the guidance on DANA issued by the Office of Corporate Credit Union (OCCU) in 2000 that was discussed in the preamble. Corporate Credit Union Guidance Letter No. 2000–03, August 30, 2000. The letter addressed the inclusion of future dated ACH items and uncollected cash letters that are perfectly matched on both the asset and liability sides of the balance sheet in the definition of DANA. As noted in the revised proposal, the issue is whether such transactions should be recorded on their settlement date (the date the funds are posted) or on the advice date (the date the corporate receives an advice indicating the funds will posted on a specific future date). 67 FR at 4270. All of the commenters on this issue noted their preference for recording these transactions on the settlement date.

The commenters stated that, while the American Institute of Certified Public Accountants (AICPA) has not taken an official position on this specific issue, there exists professional accounting guidance supporting exclusion of future dated ACH transactions from the definition of DANA. For example, the Financial Accounting Standards Board (FASB) Statement of Financial Accounting Concept's No. 6—Elements of Financial Statements defines liabilities as ''probable future sacrifices of economic benefits arising from present obligations of a particular entity to transfer assets or provide services to other entitles as a result of past transactions or events.'' FASB No. 6 goes on to state that an item is not a liability ''if the item involves a future sacrifice of assets that the entity will be obligated to make, but the events or circumstances that obligate the entity have not yet occurred.'' A number of commenters indicated they are under no legal obligation to pay the transactions on the advice date. Several commenters also noted that some corporates have received opinions from their CPA firms indicating accounting for such transactions as of the advice date is not in accordance with Generally Accepted Accounting Principles (GAAP).

The Board believes it is important to have consistency among corporates, as well with the other financial regulators. To ensure NCUA's position on this issue is consistent with that taken by the other financial regulators, NCUA staff contacted the Federal Deposit Insurance Corporation, Office of the Comptroller of the Currency, Office of Thrift Supervision and the Federal Reserve Board. All of these financial regulators require their financial institutions to report future dated ACH transactions on their call reports as of the advice date. None of the financial regulators exclude future dated ACH transactions from their regulatory ratio calculations. As such, NCUA's position is consistent with the other financial regulators.

The Board remains convinced that a corporate should report future dated ACH items and uncollected cash letters on the advice date for both regulatory and 5310 (Corporate Credit Union Call Report) reporting purposes. For other financial statement reporting, corporates should follow their CPA firm's guidance.

Capital, Section 704.3

One commenter indicated the Board should not set a regulatory standard for each type of capital account, including retained earnings. The commenter suggests each corporate set its own limits for each type of capital it wants to hold. NCUA should just set a minimum overall capital level. Several commenters indicated that PIC should be counted equally with regular reserves and undivided earnings (RUDE) in all areas of the regulation.

One commenter recommended limiting the aggregate amount of MC and PIC that can be used to satisfy the total capital requirement to 100 percent of RUDE. One commenter indicated that the amount of MC that can be counted as ''core capital'' should be limited to 50 percent of retained earnings and PIC.

The Board is not persuaded to revise the treatment of the various capital accounts. The Board believes there is a very important distinction between internally generated capital, retained earnings, and other types of capital accounts. The Board continues to believe an adequate level of internally generated capital is essential to avoid erosion of member confidence in the event losses occur. The final regulation provides an adequate capital structure and appropriate types of capital accounts for corporates.

Requirements for Membership Capital, Section, 704.3(b)

The Board addresses the comments to this provision in conjunction with its discussion of the comments on Appendix A, Model Forms.

Requirements for Paid-in Capital, Section, 704.3(c)

One commenter suggested removing the prohibition conditioning membership, services, or prices for services on a credit union's ownership of PIC. The commenter indicated that PIC is no longer considered a temporary measure to strengthen capital, and the same restriction is not placed on MC. The Board continues to believe it is in the best interest of natural person credit unions and their members to be able to obtain the most efficient and cost effective services available. The Board does not want, in effect, to force natural person credit unions to commit to a long-term PIC account as a means of obtaining service or membership. PIC was intended to be an additional means for corporates to strengthen their levels of capital. The Board believes a natural person credit union's decision to invest in PIC should be based on its commitment to the corporate, not a requirement to obtain services. Forcing natural person credit unions to obtain PIC as a condition of membership may have the unintended consequence of having them seek products and services outside the system.

Fifteen commenters requested a ''grandfathering'' period ranging from 12 to 24 months on the implementation of the revised definition of PIC. While supportive of the change making PIC a perpetual, non-cumulative dividend account, the commenters believe that immediate adoption of the definition might give a competitive advantage to those corporates that issued PIC under the existing regulatory definition. Several commenters noted that some corporates held off issuing PIC to see what the regulatory changes were before dedicating the time and expense to that endeavor.

The Board views the issuance of PIC as a business decision for corporates. In response to the comments, the Board will permit corporates to issue PIC under the current definition of PIC until June 30, 2003. The effective date of the revised definition of PIC is delayed until July 1, 2003.

Earnings Retention Requirement, Section, 704.3(i)

Based on comments to the proposed rule, the Board in the revised proposal eliminated the requirement that established a minimum RUDE to moving DANA ratio of 2 percent. Three commenters opposed this action and requested the minimum RUDE ratio be reinstated.

In place of a minimum RUDE ratio, the Board proposed an earnings retention requirement. Five commenters indicated they supported the intent of the earnings retention requirement, but not the proposal in full. Seven commenters opposed the earnings retention requirement.

A number of commenters suggested the process for calculating the earnings retention ratio is virtually impossible because dividends are paid throughout the month on various accounts. Due to the timing of when financial statements are prepared, losses or expenses may not be fully appreciated until after dividends have already been paid. A corporate might pay dividends without realizing it had gone below the 2 percent level.

Four commenters indicated that PIC should be included with retained earnings in the earnings retention calculation. Another commenter suggested excluding the gains/losses on the sale of fixed assets and other non-operating gains/losses from the earnings retention calculation. One commenter suggested calculating the earnings retention requirement only on a quarterly basis, and another commenter suggested calculating on a year-to-year rather than month-to-month basis. One commenter believed that a total capital ratio alone would be sufficient for monitoring capital in corporate credit unions. Another commenter suggested that capital requirements for each corporate be based on the risk in that specific institution.

Twenty-seven commenters objected to the dividend restrictions in § 704.3(i)(5). Numerous commenters expressed concern that the dividend restrictions might give their competitors an advantage over credit union deposits. Many also expressed concern that natural person credit unions would seek riskier investments if they believed the corporate may be unable to pay dividends. This could result in a negative impact on the entire credit union system. Several commenters also noted that smaller natural person credit unions would be the most severely affected as they rely heavily on the dividends they earn from their deposits in corporates. Two commenters recommended that a corporate that falls below 2 percent be allowed to pay dividends, but be required to submit an earnings retention plan. Two other commenters objected to the dividend restrictions for state-chartered corporates because it moves control over undivided earnings out of the hands of the corporates and the state regulators and into the hands of the federal deposit insurer. One commenter noted that, even if NCUA were flexible in its approach to approving dividend payments, the perception of increased risk would have inflicted damage to the credit union network. Several commenters indicated that NCUA already has adequate regulatory and supervisory tools to ensure corporates build and maintain an appropriate level of capital.

Ten commenters recommended the adoption of a credit-risk weighted capital requirement as the best means of measuring capital in corporate credit unions.

The Board continues to believe that an earnings retention requirement is the appropriate means of ensuring adequate retained earnings on an ongoing basis. As noted in the preamble of the revised proposed rule, the Board is concerned that a minimum RUDE ratio may have the unintended consequence of limiting the traditional role of corporates as depositors of excess liquidity for natural person credit unions. The Board also believes, as stated numerous times in the past, that a credit-risk weighted capital requirement is not the best measure of risk in corporates. 67 FR at 44273.

The Board agrees failure to pay dividends would have a dramatic impact on a corporate, its members, and, potentially, the entire credit union system. The intent of proposed § 704.3(i)(5) was to ensure cooperative action between the corporate and NCUA and, if applicable, the state regulator in building retained earnings that have fallen below the minimum desired level. Therefore, the Board is persuaded that

§ 704.3(i)(5) should be revised to address the commenters' concerns while retaining the original intent of the proposed regulation. Any restriction on the payment of dividends has been eliminated from the final rule.

The final rule requires operational management of corporates to notify the board of directors, supervisory committee, OCCU Director and, if applicable, the state regulator if the retained earnings ratio falls below 2 percent. Notification of the occurrence is sufficient if the decrease in the retained earnings ratio is due solely to the increase in moving DANA and the dollar amount of retained earnings has remained constant or increased. This places no additional burden on a corporate that has an influx of funds due to excess liquidity in natural person credit unions.

If a corporate's retained earnings ratio declines below 2 percent due, in full or in part, to a decline in the dollar amount of retained earnings and the retained earnings ratio is not restored to at least 2 percent by the next month end, the corporate will be required to submit a retained earnings action plan.

The Board believes NCUA has sufficient supervisory authority over corporates, coupled with the notification and the retained earnings action plan requirements, to work with officials to address a decline in the retained earnings ratio below 2 percent in a timely and effective manner.

The Board is satisfied that the existing retained earnings ratio calculation method is sufficient. The timing of the notification within 10 calendar days is based on the date the determination is made that the retained earnings ratio has fallen below 2 percent. If necessary, the timing of the submission of a retained earnings action plan within 30 calendar days is based on the next month end after the month in which the retained earnings ratio has fallen below 2 percent. In some cases, the determination may be made during the month, while in other cases the determination may not be made until after the books are closed at the end of the month.

Board Responsibilities, Section 704.4

The revised proposed rule changed the term ''operating policies'' to ''policies'' throughout this section and changed the title of subsection (c) to ''Other requirements.'' The commenters supported this change and it has been retained as proposed.

Investments, Section 704.5

The revised proposed rule deleted several investment related definitions no longer used in the regulation and amended the definitions of: Asset-backed security (ABS), Collateralized mortgage obligation (CMO), Forward settlement, Quoted market price, Mortgage related security, Regular-way settlement, Repurchase transaction, and Residual interest. One commenter suggested including the acronym ''ABS'' in the title for asset-backed security. The Board agrees, and the final rule includes the acronym. No commenters objected to the other provisions, and they have been deleted or amended as proposed.

Two commenters expressed concern about possible erroneous categorizations of home equity backed securities on the 5310 Call Report in light of the revised definitions of mortgage related security and asset-backed security. If there is any uncertainty about appropriate reporting, a corporate is encouraged to discuss the matter with its corporate examiner.

One commenter suggested deleting the definitions of: Credit enhancement; Dealer bid indication; Industry recognized information provider; Matched; and Small business related security, if they are no longer used in the regulation. The Board agrees and is deleting the first four terms since they are no longer used but is retaining the definition of ''small business related security'' since that term is used in § 704.5(h)(4).

Policies, Section 704.5(a)

The revised proposed rule combined the policy requirements in this section and deleted ''if any'' from § 704.5(a)(1) to clarify a corporate must have ''appropriate tests and criteria'' to evaluate investments it makes on an ongoing basis, as well as new investments. No comments were received on these provisions, and they have been retained as proposed.

The revised proposed rule deleted the requirement in § 704.5(a)(2) that the investment policy address the marketing of liabilities to its members. No comments were received on this provision, and it is deleted in the final rule.

The revised proposed rule added a requirement for a corporate to establish appropriate aggregate limits on limited liquidity investments. As with the initial proposed rule, the revised proposed rule defined ''limited liquidity investment'' to mean an investment without a quoted market price. The preamble specified ''limited liquidity investment'' means ''a private placement or funding agreement.'' 67 FR at 44274, 44285.

One commenter did not object to the proposed definition and supported the proposed requirements for limited liquidity investments. Another commenter was concerned with the proposed definition. The commenter noted using the term ''quoted market price'' in the definition was problematic, since sales prices on most ABS and MBS are not publicly available and dealers do not post bid and asked quotes. The Board agrees and has revised the definition in the final rule so that it is consistent with the revised proposed preamble. The final rule limits ''limited liquidity investments'' to private placements and funding agreements. The requirements for limited liquidity investments are retained as proposed.

Authorized Activities, Section 704.5(c)(5). The revised proposed rule clarified an ABS must be domestically issued. No comments were received on this provision, and it is retained as proposed.

Section 704.5(c)(6). The revised proposed rule deleted this section, which provided specific authorization for CMOs. These investments are still authorized under § 704.5(c)(1) and (5). No comments were received on this provision, and it is deleted in the final rule.

Repurchase agreements, Section 704.5(d). The revised proposed rule made several changes to the requirements for repurchase agreements to conform them to current market practices. No comments were received on this provision, and it is retained as proposed.

Securities lending, Section 704.5(e). The revised proposed rule made several nonsubstantive changes to the requirements for securities lending transactions to clarify the rule and conform it more closely to current market practices. No comments were received on this provision, and it is retained as proposed.

Investment companies, Section 704.5(f). Section 704.5(f) of the revised proposed rule allows a corporate to invest in an investment company, for example, a mutual fund ''provided that the prospectus of the company restricts the investment portfolio to investments and investment transactions that are permissible for that corporate credit union.'' One commenter stated that the prospectus of an investment company does not restrict the investment portfolio of an investment company, and suggested that the quoted language be changed to read ''provided that all investments and investment transactions, as described in the prospectus of the company, are permissible for that corporate credit union.'' The Board appreciates the issue

the commenter raises but does not believe a change is necessary.

A mutual fund must file a registration statement with the Securities and Exchange Commission (SEC) on Form N–1A. The prospectus is Part A of Form N–1A. According to the SEC's instructions for completing Part A, the prospectus will ''describe the Fund's principal investment strategies, including the particular type or types of securities in which the Fund principally invests or will invest.'' SEC Final Rule, Registration Form Used by Open-End Management Companies (Item 4), 63 FR 13916, 13951, March 23, 1998.

To the extent that a prospectus for a particular mutual fund only discloses the securities it ''principally'' invests in, the fund might hold other investments that are impermissible for the corporate credit union. This is unacceptable. A corporate may not own investments indirectly through a mutual fund that it is prohibited from owning directly.

While the SEC's instructions on completing a prospectus do not require the prospectus disclose all permissible investment types, the instructions do not prohibit such disclosure either. Where the prospectus' description of investment types includes only investments permissible for corporates, and that it will not hold investments other than those described, the mutual fund will be permissible for the corporate.

The Board also notes that Part B of the registration statement, the Statement of Additional Information (SAI), provides additional information about the mutual fund's investment policies and permissible investment types. For example, the SAI will ''[d]escribe any investment strategies, *including a strategy to invest in a particular type of security,* used by an investment adviser of the [mutual] fund in managing the fund that are *not* principal strategies * * *.'' Final Rule, Registration Form Used by Open-End Management Companies (Item 12(b)), 63 FR 13916, 13956, March 23, 1998, (emphasis added). In addition, the SAI will ''[d]isclose, if applicable, the types of investments that a Fund may make while assuming [a temporary defensive position as described in the prospectus.]'' *Id.,* Item 12(d).

If a prospectus is not clear, a corporate should obtain the SAI on any particular mutual fund directly from the fund company. A fund's prospectus, when read in conjunction with the SAI, should provide sufficient information on the types of investments the fund may make and whether they are restricted to those permissible for the corporate.

Prohibitions, Section 704.5(h). The revised proposed rule permitted trading securities but required transactions to be accounted for on a trade date basis and, in addition, no longer prohibited engaging in pair-off transactions and when-issued trading. The revised proposed rule retained the prohibitions on engaging in adjusted trading and short sales. No comments were received on these provisions and they are retained as proposed in the final rule.

The revised proposed rule prohibited investments in residual interests in ABS, deleted the prohibition on commercial mortgage related securities, and moved the prohibition on the purchase of mortgage servicing rights from the investments section to the permissible services section. The Board notes that the prohibition on the purchase of mortgage servicing rights, as explained in the permissible services section, is being retained as an impermissible investment. One commenter agreed with the deletion of the prohibition on investments in commercial mortgage-related securities. The commenter noted the market for privately-issued commercial mortgage-related securities has become well-established in recent years. The Board agrees, and these provisions have been deleted or amended as proposed.

Credit Risk Management, Section 704.6

The revised proposed rule defined ''obligor'' to mean the primary party obligated to repay an investment and excluded from the definition the originator of receivables underlying an asset-backed security, the servicer of such receivables, or an insurer of an investment. No comments were received on this definition, and it is retained as proposed.

The revised proposed rule deleted the definitions of ''short-term investment'' and ''long-term investment'' since they are no longer used. The revised proposed rule also deleted the definition of ''expected maturity,'' since that term was only used in the definitions of these deleted terms. No comments were received on these definitions, and they are deleted in the final rule.

Policies, Section 704.6(a). The revised proposed rule amended the policy requirements to base credit limits on capital, rather than RUDE and PIC. A few commenters supported this provision. This provision is retained as proposed.

The revised proposed rule deleted the requirement that the credit risk management policy address loan credit limits. The revised proposed rule added to the examples of concentrations of credit risk an ''originator of receivables'' and an ''insurer.'' No comments were received on these provisions, and they are retained as proposed.

Exemption, Section 704.6(b). The revised proposed rule required subordinated debt of government sponsored enterprises to meet the rule's credit risk management requirements. No comments were received on this provision, and it is retained as proposed.

Concentration limits, Section 704.6(c). The revised proposed rule established a general credit concentration limit of 50 percent of capital or a *de minimis* limit of $5 million for the aggregate of all investments in any single obligor, whichever is greater. One commenter, a bank trade group, asserted these changes would increase concentration limits. It claimed without explanation that the proposed 50 percent of capital limit would not have the overall effect of reducing credit concentration limits from the prior limits as stated in the preamble to the proposed rule. 67 FR at 44275. The Board disagrees. Using July 2002 month-end data for an unsecured obligation, the proposed 50 percent of capital limit, in comparison to the current limits, would decrease the corporate system's aggregate maximum investment in the unsecured obligations of a single obligor from $5.43 billion to $2.95 billion, reflecting a reduction in credit concentration of $2.48 billion. For secured obligations, there would be a large reduction because, unlike the revised proposal that had a limit of 50 percent of capital, corporates with Part I or Part II expanded authorities currently have no limitation.

Eleven commenters opposed the general credit concentration limit as too restrictive. Some commenters noted there is a relatively small number of AAA rated obligors. Thus, the proposed limits could force increased aggregate exposure to lower quality credits. A number of these commenters suggested a general credit concentration limit of 100 percent of capital on investments rated no lower than AA- (or equivalent) or A–1 (or equivalent). Two commenters recommended an increase to the credit concentration limit for investments rated AAA (or equivalent); one recommended a limit of 100 percent of capital. One commenter suggested differentiating between single obligor debt instruments and ABS or MBS, noting single obligor instruments, such as corporate debt instruments, are entirely dependent upon the performance of the issuing entity. Two commenters suggested NCUA generally reconsider the limits, with one suggesting NCUA permit a higher

percentage concentration limit for investments rated AA (double A flat) or higher.

As the Board noted in the revised proposed rule, the Board believes this 50 percent limit is the most credit exposure a corporate should prudently take in investment-grade quality investments. *Id.* The Board continues to believe the corporate network must exercise caution in placing membership capital at risk, and these provisions are retained as proposed.

Section 704.6(c)(2) of the revised proposed rule provided exceptions to the general credit concentration rule. For repurchase and securities lending transactions, the proposed limit was 200 percent of capital. Investments in corporate CUSOs were subject to the limitations in § 704.11. Investments in wholesale corporate credit unions and aggregate investments in other corporates were exempt. One commenter recommended limiting the exemption to wholesale corporates. The commenter asserted it was difficult to envision efficiencies for corporates investing in other non-wholesale corporates. As stated in the preamble to the revised proposal, the Board continues to believe that the benefits to the corporate system of applying this exemption to all corporates outweigh any potential concerns, and the Board is retaining the exemption in the final rule. 67 FR at 44275.

Revised proposed § 704.6(c)(3) deems an investment as ''nonconforming'' if it fails a credit concentration requirement because of a reduction in capital following the purchase of that investment. A corporate is required to exercise reasonable efforts to bring nonconforming investments into conformity within 90 days. Investments that remain nonconforming for 90 days are deemed to ''fail'' a requirement, and a corporate will have to comply with the requirements in § 704.10. No comments were received on this provision, and it is retained as proposed.

Two commenters recommended deleting § 704.6(c)(4), since proposed § 704.6(c)(3) addressed the same issue. The Board notes that § 704.6(c)(4) was deleted in the revised proposed rule and will remain deleted in the final rule.

Credit ratings, Section 704.6(d). This section reduced the applicable credit rating to AA- (or equivalent) for investments with long-term ratings and A–1 (or equivalent) for investments with short-term ratings. The revised proposed rule triggered the investment action plan requirements of § 704.10 if at least two ratings were downgraded and a corporate had relied on more than one rating to meet the minimum credit rating requirements at the time of purchase.

A state-chartered corporate supported this proposal, but believed additional investment authority was needed. The corporate noted its state supervisory authority permitted investment in all investment grade categories. Further, the commenter noted typical cash market practice for repurchase transactions is to require investment grade securities; the commenter noted it is more difficult to arrange repurchase agreements at favorable rates if the securities must be restricted to those with ratings in the top grades of the investment grade categories.

As noted in the preamble to the revised proposed rule, in light of the substantial flexibility already provided to corporates, the Board remains convinced a base level corporate should not be permitted to acquire more than limited credit risk exposure. Expanded authority provisions allow a broader spectrum of credit risk, and require increased due diligence by corporates that obtain such authority. 67 FR at 44276. Thus, this section is retained as proposed.

The proposed rule clarified investments in a corporate or a CUSO do not require a rating. One commenter recommended corporates be permitted to invest in other non-wholesale corporates only if that corporate had a credit rating from at least one nationally recognized statistical rating organization (NRSRO). It is not current market practice for corporates to obtain depositor ratings. While an NRSRO rating is a useful tool for investors to evaluate credit risk, it is no substitute for due diligence. The Board is convinced a corporate should be permitted to decide whether to purchase shares or deposits in another corporate. Thus, this provision is retained as proposed.

One commenter requested clarification of ratings relied upon ''at the time of purchase.'' The commenter noted this might mean either the trade or settlement date. The commenter asserted industry practice was to assign an assumed rating for new-issue securities and not to provide an official rating until settlement date. The commenter suggested there was the potential for a corporate to be unable to purchase new-issue securities until settlement date when the official rating was assigned if the interpretation of ''at the time of purchase'' were trade date. The Board agrees industry practice is to assign an assumed rating for new-issue securities and not to provide an official rating until settlement date. However, the Board understands it is also industry practice that purchase offers are contingent on assignment of the assumed rating. This means a purchasing corporate could refuse delivery on the settlement date if a security did not receive the bargained for rating. Thus, ''at the time of purchase'' means the security must have either an official permissible rating on the trade date if purchase is not contingent on receipt of an official permissible rating or, for a new issue, an assumed permissible rating on the trade date and an official permissible rating on the settlement date.

To avoid confusion regarding the investment watch list requirements of § 704.6(e)(1), the revised proposed rule clarified in § 704.6(d)(4) that it is applicable only when the corporate relied upon more than one rating to meet the minimum credit rating requirements at the time of purchase. If there is a subsequent downgrade below the minimum requirement, then the investment must be placed on the investment watch list.

One commenter recommended a technical change in § 704.6(d)(4) to delete the words ''any rating that'' following ''investment watch list'' and to substitute ''any investment for which a rating.'' The Board agrees, and the final rule reflects that substitution.

Reporting and documentation, Section 704.6(e). The revised proposed rule clarified that requirements for annual approval apply to each credit limit with each obligor or transaction counterparty. No comments were received on this provision, and it is retained as proposed.

Lending, Section 704.7

Section 704.7(c)(1) and (2). Currently, the aggregate secured and unsecured loan and line of credit limits to any one member credit union are based on the higher of a percentage of capital or a percentage of RUDE and PIC. The Board proposed basing the loan limits on a percentage of capital and eliminating the option of basing them on a percentage of RUDE and PIC. The Board received no comments on this section and has adopted this change in the final rule.

Section 704.7(c) and (d) and Appendix B to Part 704 reference ''irrevocable'' loans and lines of credit. In the revised proposed rule, the Board deleted the modifier ''irrevocable'' while clarifying in the preamble that the loan and line of credit limits apply to both ''irrevocable'' and ''revocable'' loans and lines of credit. One commenter objected to the deletion of the word ''irrevocable'' in the revised proposed rule. This commenter

suggested re-inserting either ''irrevocable'' or ''committed'' in the final rule so that the limits do not apply to uncommitted lines of credit. The Board's intent is that the aggregate limits apply to all loans and lines of credit and, therefore, the Board is retaining the deletion in the final rule.

Section 704.7(d). This section addresses ''Loans to nonmembers'' and is subdivided into two subsections: Credit unions and Corporate CUSOs. A commenter suggested part 704 should not distinguish between corporate and natural person credit union CUSOs. This commenter recommended expanding § 704.7 to address loans to natural person credit union CUSOs rather than requiring those loans to comply with part 723. The rationale was that the part 723 collateral requirements put corporates at a disadvantage in the marketplace for natural person credit union CUSO related activities. In the final rule, the Board does not expand § 704.7 to address loans to natural person credit union CUSOs. The Board believes that the exceptions should only apply to loan limits for corporate CUSOs because these entities are wholly or partially owned by corporates. Also, loans to corporate CUSOs are currently required to comply with part 723's aggregate limits and most of that regulation's due diligence requirements.

Section 704.7(e)(3). This provision of the revised proposal, like the current rule, provides a partial exemption from the member business loan rule if a loan or line of credit to an ''Other member'' is fully guaranteed by a credit union or fully secured by U.S. Treasury or agency securities. One commenter requested clarification as to whether cash or shares are also included as permissible collateral to secure a loan, line of credit or letter of credit. Loans secured by cash or shares, rather than qualifying for a partial exemption, are not member business loans and, therefore, are not subject to any of the requirements of part 723. 12 CFR 723.1(b)(2).

Revised proposed § 704.7(e) clarified the applicability of the member business loan rule in part 723 to loans granted by a corporate. The Board did not receive any comments on this revision and, therefore, the Board retained this clarification in the final rule.

Revised proposed § 704.7(g) expanded the provision governing loan participations between corporates to include a requirement that a corporate execute a master participation loan agreement before the purchase or the sale of a participation loan. In conjunction with this requirement, the Board deleted the language that a participation loan agreement may be executed at any time before, during, or after the disbursement. No comments were received on this section, and this requirement is retained in the final rule.

The Board proposed allowing corporates to participate in loans with member natural person credit unions but only as an expanded Part V authority and with certain limitations. One commenter indicated proposed Part V authority should be a permissible activity for all corporates. The rationale was that, since natural person credit unions are permitted to engage in this activity, it is not a regulatory concern for NCUA. This commenter also stated that state law on participation lending should govern state-chartered corporates. As stated in the preamble to the proposed rule, since the Board believes ''a number of corporates do not exhibit a level of infrastructure commensurate with the risks associated with this activity,'' corporates should apply for approval before entering into loan participations with natural person credit unions. 66 FR at 48748. For these reasons, the final rule only allows corporates with Part V authority to engage in participation lending with natural person credit unions. These safety and soundness concerns apply to state-chartered corporates as well as federal corporates. Another commenter recommended the Board grandfather corporates who have received a waiver to engage in participation lending with member natural person credit unions. The Board agrees and corporates with existing waivers continue to have the authority to enter into loan participations to the extent previously granted without applying for Part V authority.

One commenter recommended expanding Part V to permit a wholesale corporate to join with its member corporate in participating in a loan that the wholesale corporate is permitted to purchase in its own right from a nonmember natural person credit union. The Board believes it needs additional time to study this issue, which is being raised for the first time in response to the revised proposed rule. The Board notes that, after additional study, it may be open to considering this activity as permissible either by amending the regulation to expand Part V or as a waiver to Part V.

Finally, the Board proposed reorganizing the lending section to make it easier to read. No commenter objected to the reorganization and the final rule incorporates these changes.

Asset and Liability Management, Section 704.8

The revised proposed rule deleted the term ''net interest income'' because it is no longer used in the regulation and amended the definitions of ''net economic value (NEV)'' and ''fair value.'' NEV means the fair value of assets minus the fair value of liabilities. The amended definition excluded from liabilities both PIC and MC, rather than excluding only PIC. One commenter again urged that all off balance sheet financial derivatives remain in the definition of NEV. As the Board explained in the revised preamble, for purposes of NEV measurement, GAAP does not require accounting for immaterial positions in financial derivatives on balance sheets. 67 FR at 44277.

The commenter also recommended limiting the aggregate amount of MC and PIC included in total capital to not more than 100 percent of RUDE in any NEV-related requirements. This would limit the aggregate amount of MC and PIC excluded from liabilities for purposes of NEV calculations to not more than retained earnings, resulting in NEV limits based on a percentage of two times the fair value of retained earnings. If a corporate were to realize a loss of substantially all of retained earnings, but not MC or PIC, the commenter's proposal would require a corporate without net unrealized gains to eliminate all interest rate risk. The Board does not believe this is the most advisable course of action to re-establish earnings. Instead, the Board has proposed conservative NEV limits based on capital, rather than a subset of capital. Under the Board's formulation, a loss of substantially all of retained earnings reduces the level of interest rate risk permitted, but does not require a corporate to eliminate all interest rate risk. Therefore, these provisions are deleted or amended as proposed.

The Board has made a technical change to the revised proposed definition of ''fair value.'' In the first sentence of the definition ''other than in'' is changed to ''as opposed to.''

Policies, Section 704.8(a)(2). The revised proposed rule eliminated the redundancies with § 704.5(a) and changed the term ''current NEV'' to ''base case NEV'' to provide uniform usage throughout the regulation. No commenters addressed these provisions, and they are deleted or modified as proposed.

Section 704.8(a)(5). The revised proposed rule deleted the requirement for a policy limit on decline in net income. One commenter supported this

deletion, and it is deleted in the final rule.

Section 704.8(a)(6). The revised proposed rule added a requirement for the asset and liability management policy to address the tests used before purchase, to include an estimate of the impact of proposed investments on the percentage decline in NEV, as compared to the base case NEV. One commenter opposed this requirement. The commenter advocated the tests should be reviewed as a supervisory issue. As noted in the preamble to the revised proposed rule, this provision is intended to require a corporate to establish an ongoing process to identify, estimate, monitor and control interest rate risk between the periodic complete NEV analyses. 67 FR at 44277. The Board believes a corporate's board should establish policy parameters for this process and has retained this section as proposed.

Penalty for early withdrawals, Section 704.8(c). The revised proposed rule clarified that the minimum penalty for early certificate/share withdrawal, if early withdrawal is permitted, must be reasonably related to the rate that the corporate would be required to offer to attract funds for a similar term with similar characteristics. The preamble noted a gain does not appear consistent with the notion of a penalty for early withdrawal. 67 FR at 44278.

No commenters addressed the text of the revised proposed rule, however, nine commenters objected to the statement in the preamble that a gain does not appear consistent with the notion of a penalty for early withdrawal. *Id.* The commenters asserted a gain could be paid on early withdrawal of a share certificate and still meet the requirement of a penalty for early withdrawal. The commenters noted this is consistent with the ''mark to market'' premise of a penalty sufficient to cover the estimated replacement cost of the redeemed certificate. The commenters also noted the need to be competitive with alternative instruments that could provide members with liquidity and gains, without the need to increase the balance sheet of both the corporate and the member by a share secured loan if a gain could not be paid.

The Board does not believe that the concept of a penalty can be equated with the payment of a gain and reiterates that a gain is not permissible in conjunction with a penalty for early withdrawal. In addition, the Board is concerned that contractual provisions for redemption of a deposit at a gain may have the unintended consequence of encouraging a run on a substantially impaired corporate by members seeking to obtain gains. The Board acknowledges holders of debt securities may freely transact with third-party participants in the secondary market at a price that may result in a gain to the holder. However, debt security issuers typically are not subject to repurchase demands by debt holders. This is because the holder of a typical debt security does not have the right to put the debt to the issuer at a market price.

Interest rate sensitivity analysis, Section 704.8(d). The revised proposal deleted the requirement to conduct net interest income simulations. One commenter supported the elimination of the requirement for net interest income simulations, and it is deleted in the final rule.

The revised proposed rule deleted the word ''Treasury'' to permit evaluation of the impact of shocks in appropriate yield curves on its NEV and NEV ratio, since the market has moved away from the Treasury yield curve as a benchmark. No comments were received on this provision, and it is amended as proposed.

Section 704.8(d)(1)(i). The revised proposed rule increased from two to three percent the minimum base case NEV ratio that triggers monthly interest rate sensitivity analysis testing. One commenter suggested setting the trigger at four percent, rather than three percent, since the base case NEV ratio for most corporates will increase significantly because of the new definition of NEV.

The Board is comfortable with a three percent NEV trigger for monthly testing in base corporates, in large measure because the corporate system has improved its ability to identify, measure, monitor and control interest rate risk since the existing regulation was adopted. In addition, the estimation requirements of amended § 704.8(a)(6) typically provide adequate information for a base corporate with a minimum base case NEV ratio of at least three percent to monitor and control interest rate risk between complete periodic reevaluations. The Board recognizes base case NEV ratios are likely to increase substantially under the amended definition of NEV. The section is retained as proposed.

Section 704.8(d)(1)(ii) limited a corporate's risk exposure to levels that do not result in any NEV ratio resulting from the specified parallel shock tests, or a base case NEV ratio, of less than two percent, rather than the current one percent. No comments were received on this provision, and it is retained as proposed.

Section 704.8(d)(1)(iii). The proposal reduced the NEV decline limit for a base corporate from 18 to 15 percent. This represented an increased level of risk compared to the current rule, since the proposal excluded MCs from liabilities and, therefore, increased the base case NEV.

Two commenters recommended the Board retain the 18 percent limit: one noted this represented little interest rate risk and the other was not aware of any significant deterioration of a base corporate because of interest rate risk. In contrast, one commenter suggested reducing the NEV decline limit to 10 percent, to avoid increasing the amount of interest rate risk permitted.

As noted in the preamble to the revised proposed rule, the Board is comfortable with the increased risk because the corporate system has improved its ability to measure interest rate risk since the existing regulation was adopted. 67 FR at 44278. In addition, the estimation requirements of amended § 704.8(a)(6) provide adequate information for a corporate to monitor and control interest rate risk between complete periodic reevaluations. The Board does not believe it is prudent to increase the amount of interest rate risk that a base corporate may undertake further than the proposed 15 percent decline in NEV. Corporates meeting the requirements for expanded authority provisions are permitted to undertake additional interest rate risk. Thus, this section is retained as proposed.

Section 704.8(d)(2). The revised proposed rule required all corporates to assess annually whether it is appropriate to conduct periodic, additional, interest rate risk tests. These additional tests formerly were triggered based on the level of unmatched embedded options. No comments were received on this provision, and it is retained as proposed.

Regulatory Violations and Policy Violations, Section 704.8(e) and (f). The revised proposed changes were non-substantive, grammatical amendments and also designated the OCCU Director to respond to regulatory violations. No comments were received on these sections, and they are retained as proposed.

Divestiture, Section 704.10

The Board did not propose any changes to this provision; however, because of confusion concerning this provision, the Board proposed retitling it ''Investment Action Plan.'' This change clarifies that divestiture is not the only remedy available under this section. No commenters opposed the title change; however, five commenters objected to the current inclusion of derivative contracts under the

divestiture requirements of this section. They stated that these contracts are not investments and should not be subject to this provision. The commenters noted that these contracts are not freely tradable between third parties, as is the case with traditional investment instruments, and the cost for a corporate to ''unwind'' a derivative contract can be excessive.

The Board has consistently interpreted derivatives as subject to the requirements for investments. 12 CFR parts 703 and 704. Further, the Board believes these transactions should be subject to the requirements for an investment action plan because of the credit risk of the counterparty. Risk mitigation within the contract will have a significant impact on the Board's willingness to allow the corporate to hold instruments where the issuing entity has been downgraded. The Board is aware there are costs involved in unwinding a derivative contract and will review each plan submitted by a corporate weighing the costs of unwinding the derivative versus the risks associated with holding it. In addition, the Board has added clarifying language to Appendix B, Part IV to clarify how § 704.10 applies to derivative contracts. The Board remains convinced that corporates should not be allowed to hold financial contracts or investments from counterparties with excessive levels of credit risk and so will continue to interpret derivatives as investments under this provision. The Board is revising the title as proposed.

Corporate CUSOs, Section 704.11

The revised proposed rule added new due diligence requirements for corporates' loans to corporate CUSOs. These requirements were taken from the member business loan rule. No commenters commented on this provision and the Board is adopting it in the final rule.

The revised proposed rule maintains a limit of 15 percent of capital for investments in corporate CUSOs, increases the aggregate limit for loans and investments to 30 percent of capital, and retains the additional 15 percent for loans that are fully secured. One commenter objected stating the proposal was too limiting. Another commenter suggested clarifying that the 30 percent aggregate limit for loans and investments does not include the additional 15 percent for loans that are fully secured. The Board believes the increased limits strike the appropriate balance between added flexibility and safety and soundness and is retaining them as proposed in the final rule. The Board notes that the 30 percent aggregate limit does not include the additional 15 percent for loans that are fully secured.

The preamble to the revised proposed rule explained that the current audit requirements in § 704.11(d)(3) do not require a separate CPA audit for wholly owned CUSOs. This modification mirrored the practice that is currently permissible for natural person CUSOs. 63 FR 10743, 10747, March 5, 1998. Six commenters suggested that this exemption be stated in the regulation and it also apply to majority owned CUSOs. The Board agrees and the final regulation states that a wholly owned or majority owned CUSO is not required to obtain a separate annual audit if it is included in the corporate's consolidated audit.

Based on a request from six commenters, the revised proposal amended § 704.11(b) so that it mirrors § 712.6 of the natural person CUSO rule. Section 704.11(b) prohibits a corporate from acquiring control directly or indirectly of another ''financial institution'' and § 712.6 prohibits a natural person credit union from acquiring control directly or indirectly of another ''depository financial institution.'' One commenter questioned the authority of the Board to limit ''financial institution'' with the modifier ''depository.'' The Board's long-standing interpretation of financial institution is that it means a deposit taking institution. 51 FR 10353, 10354, March 26, 1986. This interpretation has been reflected in the natural person CUSO rule since 2001 and the Board believes adopting it in the corporate CUSO rule is appropriate. 66 FR 40575, August 3, 2001. This commenter also objected to the current prohibition on a corporate investing in the shares, stocks or obligations of a CUSO that is a financial institution. The commenter notes that this prohibition is broader than either the limitation in the Federal Credit Union (FCU) Act or the natural person CUSO regulation that only prohibit ''acquir[ing] control directly or indirectly'' and do not prohibit ''invest[ing]'' in a financial institution. 12 U.S.C. 1757(7)(I); 12 CFR 712.6. The Board agrees and is deleting this prohibition from the final rule.

The revised proposal clarified that the aggregate limit of § 723.16, the member business loan rule, applies to loans to CUSOs. No comments were received on this clarification and the Board is retaining it in the final rule.

Permissible Services, Section 704.12

The revised proposal listed eight broad categories of permissible financial services for corporates with examples under each category. This was modeled after the broad categories in parts 712 and 721. The Board received no comments on this provision, except as to its applicability to state-chartered corporates, and is retaining it in the final as proposed.

The revised proposal, at the commenters' suggestion, added a provision similar to the provisions in parts 712 and 721 concerning adding new permissible services. It permits corporates to petition the Board to add a new service to § 704.12 and encourages them to seek an advisory opinion from the Office of General Counsel (OGC) on whether a proposed service is already covered by one of the authorized categories before filing a petition. The rule does not require a corporate to come to OGC for an opinion every time it wants to provide a service not specifically listed as an example under a broad category. An opinion from OGC is recommended if there is doubt as to whether a specific service falls within one of the broad categories. In those situations, a corporate that does not consult with OGC runs the risk of engaging in an impermissible activity and being subject to supervisory action. Six commenters objected to or requested clarification on the applicability of this provision to state-chartered corporates. The commenters suggest that, at a minimum, since a state-chartered corporate's authority to engage in an activity is derived from its state statute and not the FCU Act, the appropriate approach for state charters is to request a waiver, rather than a rule change, to add an activity that may be impermissible for federal corporates. The Board would then base its decision to grant or deny the waiver on any safety and soundness concerns it has with the proposed activity. The Board agrees with the commenters and is revising the final rule to reflect a waiver process for state-chartered corporates.

The revised proposal deleted the requirement that services to nonmember natural person credit unions through a correspondent services agreement could only be provided to those natural person credit unions' branch offices in the corporate's geographic field of membership. In addition, the revised proposal clarified that a correspondent services agreement is an agreement between two corporates for one of the corporates to provide services to the members of the other. One commenter reiterated its objection to the clarification that correspondent services can only be provided through an agreement with another corporate credit union. The Board remains committed to the fundamental principle that credit

unions, including corporates, are formed to serve their members and is adopting the requirements in the revised proposal for correspondent services in the final rule.

The revised proposal also moved the current prohibition on the purchase of ''mortgage servicing rights'' from the investment section to this section and renamed it ''loan servicing rights.'' The Board has reconsidered removing this prohibition from the investment section. The Board will retain the prohibition in the investment section to clarify that this is not a permissible investment. It will also include the prohibition in this section. Although this activity is a permissible service for natural person credit unions under limited circumstances, the Board has safety and soundness concerns with corporates engaging in this activity, and will continue to prohibit this service for corporates.

One commenter suggested clarifying that the prohibition on the purchase of loan servicing rights does not apply if a corporate has the authority to purchase loans and the purchase of servicing rights are in conjunction with that purchase. The Board agrees that the purchase of servicing rights in conjunction with the purchase of a loan is not prohibited.

Fixed Assets, Section 704.13

The revised proposal eliminated this section. No commenters commented on this change. Therefore, the revised proposal reflects this change.

Representation, Section 704.14

The revised proposal clarified the meaning of the term ''credit union trade association'' in § 704.14(a) by adding to the regulation the definition of ''credit union trade association'' that was in the preamble to the prior final rule. 59 FR 59357, 59358, November 17, 1994. The thirteen commenters that commented on this clarification objected to adding a definition of ''credit union trade association.'' The commenters erroneously perceived this as a change and stated that it unnecessarily limited the pool of qualified applicants and is not needed in light of the recusal provisions in § 704.14(d). The commenters stated that the restrictive definition ignores the reality that natural person CEOs on corporate boards are often the most active in the credit union community serving multiple roles at the chapter, league and national level. Several of these commenters suggested amending the definition so that it is not so limiting. They suggested only including the state credit union leagues of the state in which the corporate is headquartered. One commenter fails to see how loyalty is divided if the chair serves on the board of an affinity group such as a defense, automotive or educational trade association. This commenter suggests only prohibiting state or multi-state leagues.

The Board continues to believe that the chairman of the board of a corporate should not serve simultaneously as an officer, director or employee of a national credit union trade association. As the Board stated when this provision was originally drafted, ''the chair should be an individual whose loyalty is *in no way divided* between the corporate credit union and a trade association.'' 59 FR 59357, 59358, November 17, 1994 (emphasis added). The Board, however, agrees that the definition is broader than is necessary to accomplish its objective of having a chair ''whose loyalty is in no way divided'' and is deleting from the prohibition ''and their affiliates and service organizations, and local, state, and national special interest credit union associations and organizations.''

The revised proposal amended the requirement in § 704.14(a) that both federal and state-chartered corporates comply with federal corporate bylaws governing election procedures. All corporates will have to comply with § 704.14(a) governing election procedures but state-chartered corporates will not have to comply with federal corporate bylaws. No commenters commented on this amendment. The Board is retaining this change in the final rule.

Wholesale Corporate Credit Unions, Section 704.19

The revised proposed rule eliminated the proposed 1 percent minimum RUDE ratio requirement and replaced it with an earnings retention requirement when the retained earnings ratio falls below 1 percent.

Three commenters addressed the earnings retention requirement. One commenter disagreed with the proposal stating despite the two-tier corporate structure, the earnings retention requirement should be the same as established for retail corporates. This commenter is concerned with the potential for a significant financial crisis in the credit union industry if a wholesale corporate fails. The Board remains convinced a separate wholesale corporate earnings retention requirement is appropriate based upon the corporate system's tiered capital structure.

One commenter expressed concern with the earnings retention requirement being met by either the current month or rolling 3-month calculation. This commenter believes wholesale corporates should be permitted to meet the earnings retention requirement based on a rolling 12-month average as presently permitted for reserve transfers. The Board believes sufficient flexibility for meeting the earnings retention requirement exists by using either the current month or rolling 3-month calculation. The Board notes the OCCU Director may approve a decrease in the earnings retention amount in the rare event a lesser amount is necessary to avoid a significant adverse impact upon a wholesale corporate.

One commenter stated the .15 percent per annum earnings retention requirement when the retained earnings ratio is less than 1 percent and the core capital ratio is less than 3 percent neither considers the tiering of reserves in the corporate system nor the narrow margins necessary for a wholesale corporate to offer competitive investment products. This commenter believes the earnings retention factor should be .10 percent per annum when the retained earnings ratio is less than 1 percent and the core capital ratio is less than 3 percent. The Board is not persuaded by this argument. The Board considers wholesale corporates subject to .15 percent per annum earnings retention requirement to be thinly capitalized. The Board believes wholesale corporates have numerous options available to reduce the earnings retention requirement if the .15 percent per annum earnings retention requirement is too onerous. For example, wholesale corporates can issue additional PIC to increase the core capital ratio to at least 3 percent or they can use off balance sheet activities to shrink their balance sheet.

Two commenters disagreed with the payment of dividend language in revised proposed § 704.19(b)(5) for many of the same reasons commenters opposed the language contained in revised proposed § 704.3(i)(5) for retail corporates. One commenter recommended substituting a notification provision for the current language. The Board agrees and, for the reasons stated in § 704.3, the final rule replaces the limitations on the payment of dividends with notification and restoration plan requirements.

Appendix A to Part 704—Model Forms

The revised proposal added language to the model forms to clarify the treatment of MC and PIC in the event of the merger, liquidation, or charter conversion of a member credit union or the corporate credit union. Six commenters raised objections to the

proposed clarifications. The commenters expressed concern that the additional requirements, rather than being a clarification to the existing language, alter the contractual agreement between the corporate and its members. A number of commenters also noted the additional language might create potential legal, regulatory, and operational problems. One commenter recommended leaving the added language in Appendix A and making the additional disclosure voluntary. Several commenters noted that natural person credit unions are not bound by part 704, nor is a continuing entity in the event of a charter conversion. Further, the commenters contended that, in the case of a liquidation or charter conversion, the member holding the MC or PIC account ceases to exist. As the entity no longer exists, its membership automatically terminates and its shares, including MC and PIC, should be paid out in accordance with applicable law. The commenters argued the model forms conflict with the Corporate Federal Credit Union Bylaws, and they may also conflict with applicable state laws for state-chartered credit unions. Several commenters indicated the existing language was adequate and it should be left up to each corporate to determine how to handle MC in the event of a merger, liquidation, or charter conversion based on its own capital management plan and applicable laws and regulations.

The Board does not believe the language added to Appendix A and to the requirements for MC in § 704.3(b)(3) create any additional legal, regulatory, or operational problems. The current regulation requires all MC accounts to have a minimum three-year notice. 12 CFR 704.2. The regulation does not provide any exceptions to the three-year notice requirement. The clarifying language has been added because OCCU has received inquiries as to how to handle MC in the event of merger, liquidation or charter conversion.

In the event of a merger, the existence of the MC should be identified as part of the due diligence process. The continuing credit union has the right to put the MC on notice. If the continuing credit union is a member of the corporate, an adjusted balance account may be adjusted at the next adjustment period. If the account is not an adjusted balance account, the continuing credit union would not be in violation of § 703.100, as that section specifically states the measure is assets ''*at the time of purchase*'' of the MC. In the event of a charter conversion, as with a merger, the existence and requirements of the MC should be identified during the due diligence leading up to a charter conversion. The new entity may place the MC on notice and collect the funds at the end of the three-year notice period. In the event of a liquidation, the Liquidating Agent may submit a request to the OCCU Director to allow the corporate to release the funds before the end of the three-year notice period.

The existing regulation is very specific that the only means by which a credit union may obtain its funds in an MC account is after the three-year notice or if it sells it to another credit union with the concurrence of the corporate. 12 CFR 704.2. The language was drafted to provide as much ''permanence'' to the three-year accounts as possible so they could be considered as capital. The regulatory requirements in the corporate rule and the contractual provisions of the MC concerning the three-year notice requirement do not conflict with the general provision in the Corporate Federal Credit Union Bylaws governing withdrawal of shares. Article III, Section 5 of the bylaws states a corporate's board may not require a member to give more than 60 days notice of intent to withdraw. This general withdrawal provision is not intended to apply to accounts that the member is contractually obligated to maintain for a period in excess of 60 days. Based on the requirements of current § 704.2, there should be no outstanding MC with conditions that would cause legal, regulatory, or operational concerns due to the addition of the clarifying language.

One commenter suggested revising the wording of § 704.3(b)(5) by changing the words ''credit union'' to ''another member'' to permit one member of the corporate to sell its MC to another member rather than only to a credit union in the corporate's field of membership. The Board concurs with the recommendation and has adopted this change in the final rule.

Appendix B to Part 704—Expanded Authorities and Requirements

In the revised proposed rule the Board proposed changes to: expand permissible credit ratings on investments; permit corporates that pre-commit to a higher level of capital the option of a higher level of interest rate risk; ease the requirements for corporates to participate in risk reducing derivative activities; and permit corporates to participate in loan participations with natural person credit unions. In addition, the revised proposal eliminated the proposed requirement for corporates to update the self assessment plan originally submitted for expanded authority. No comments were received objecting to the removal of this requirement and it is retained as proposed.

Base-Plus

In the revised proposed rule, the Board proposed a maximum NEV decline of 20 percent. Several commenters believed the limit should remain at its current 25 percent level, and one commenter believed the level should be decreased. The Board remains convinced that the proposed level is appropriate given the requirement of monthly NEV analysis. The Board is adopting the limits from the revised proposed rule.

Parts I and II

In the revised proposed rule, the Board proposed NEV decline limits based on capital levels. Several commenters opposed the proposed limits recommending the limits remain at current levels, and one commenter recommended lower levels. The Board has greater confidence in the ability of the corporate credit unions to model their balance sheets accurately; therefore, the limits were proposed at levels where the corporates can manage their balance sheets without taking excessive levels of risk. The Board was not convinced to change the levels either up or down; therefore, the Board is adopting the limits from the revised proposed rule.

The Board will permit any corporate currently approved for Part I or Part II Expanded Authorities to request to lower its NEV decline limit in conjunction with a request to lower its minimum capital requirement from 5 or 6 percent, respectively.

In the revised proposed rule, the Board proposed limits for the aggregate credit exposure to a single obligor at 50 percent of capital. Several commenters objected that the 50 percent of capital general concentration limit was too restrictive, particularly for corporates with expanded authorities. The commenters recommended increasing concentration limits to 100 percent, particularly for long-term instruments rated not lower than AA– and short-term investments rated no lower than A–1. The Board continues to believe this limit is the most credit exposure a corporate should prudently take in investment quality investments.

In the revised proposed rule, the Board established a 300 percent of capital limit for Part I, and 400 percent limit for Part II on aggregate investments in repurchase and securities lending agreements with any one counterparty. Several commenters objected to the

limits stating that these levels will significantly reduce their existing limits. The Board continues to believe the proposed levels are prudent given the secured nature of the activity and the increased requirements for credit analysis for Part I and II corporates; however, the Board believes increasing the limits beyond those proposed would raise safety and soundness concerns. The Board is adopting the limits as proposed in the revised proposed rule.

In the revised proposed rule, the Board tied minimum capital ratings of short-term investments to a minimum issuer long-term rating. One commenter contended that the requirement tying short-term and long-term ratings together is not representative of credit risks in the marketplace because long-term and short-term credit ratings should be assessed independently. The Board remains convinced that the overall credit quality of the issuer must fall within the limits of this rule and is adopting the proposed requirements.

Part II

The Board proposed lowering the minimum credit rating requirement for a long-term investment (including asset-backed securities) to BBB (flat). Three commenters recommended that BBB (flat) concentration limit be reduced to 25 percent and the concentration limit for AAA rated investments be increased to 100 percent of total capital. One commenter recommended the concentration limit for AAA rated investments be set at 75 percent for Part I and 100 percent for Part II. One commenter stated that corporates with higher levels of expanded authority have demonstrated the ability to manage the risks inherent in these lower rated instruments. The commenter also noted that corporates are in the business of managing risk. One commenter was opposed to permitting any investment in BBB (flat) rated securities. Based on the comments and further analysis of the risk, the Board believes the limit for BBB+ and BBB (flat) rated instruments with Part II authority should be reduced from the revised proposed rule level of 50 percent to 25 percent of capital. The Board agrees with the commenters that corporates with Part I or II authority do have additional credit monitoring capabilities allowing them to move down the credit scale and this authority requires the additional infrastructure stipulated in this rule and its appendixes.

Part III

In response to the proposed rule, several commenters noted that Part III granted preference to foreign banks over other foreign counterparties. The revised proposal permitted corporates to purchase investments from any approved entity with an acceptable NRSRO rating within a country with an acceptable country rating. This change allowed corporates greater flexibility in managing their investments. No comments were received and the Board is adopting this change as proposed.

In addition, the revised proposal incorporated the changes from the proposed rule. No comments were received and, for the reasons stated in the revised proposal, the Board is adopting these changes as proposed. 67 FR at 44283.

Part IV

Part IV expanded authorities have been restructured to provide more flexibility among corporates seeking to use derivatives to reduce risk. The current rule requires corporates to have either Part I or II expanded authorities to qualify for Part IV. The proposal removed this requirement. The Board believes that all corporates demonstrating and possessing the resources, knowledge, systems, and procedures necessary to measure, monitor, and control the risks associated with derivative transactions should be permitted to use these powers. As with all expanded authorities, the corporate in its application must detail the specific types of derivatives they may utilize. The Board believes that derivative transactions, used properly, reduce risk to the institution and its members.

In the revised proposed rule, the Board broadened the authority of corporates to enter into derivative transactions by adding government sponsored enterprises, member credit unions, and entities fully guaranteed by an entity with a minimum permissible rating for a comparable term investment. No negative comments were received, and the Board is adopting this change as proposed.

Several commenters noted that the revised proposed rule should state that Part III expanded authority was required for a corporate to enter into derivative contracts with a foreign counterparty. The Board has amended Part IV to clarify this.

In the revised proposed rule, Part IV (b)(1) detailed the requirements for counterparty credit ratings. Several commenters noted in their comments on § 704.10 that derivatives are not investments; therefore Section 704.10 should not apply. As previously stated, the Board has consistently interpreted derivatives as investments for purposes of parts 703 and 704. In addition, the Board believes that without credit mitigation within the contract, these instruments may present excessive levels of credit risk if a counterparty is downgraded. Therefore, Part IV is amended to clarify that compliance with § 704.10 is required if the counterparty is downgraded below permissible levels.

Delegations of Authority

Although not in the initial proposed rule, the Board, in an effort to streamline the regulatory approval process, has delegated to the OCCU Director in the revised proposal, the authority to act on its behalf in §§ 704.3(e), (g) and (i); 704.8(e); 704.10; 704.15; and 704.19(b).

Technical Correction

The Board has revised the wording in § 704.18(e) to conform to the new terminology in part 704.

C. Regulatory Procedures

Regulatory Flexibility Act

The Regulatory Flexibility Act requires NCUA to prepare an analysis to describe any significant economic impact any proposed regulation may have on a substantial number of small entities (those under $1 million in assets). The rule only applies to corporates, all of which have assets well in excess of $1 million. The final amendments will not have a significant economic impact on a substantial number of small credit unions and, therefore, a regulatory flexibility analysis is not required.

Paperwork Reduction Act

NCUA has determined that the final regulation does not increase paperwork requirements under the Paperwork Reduction Act of 1995 and regulations of the Office of Management and Budget. NCUA currently has OMB clearance for part 704's collection requirements (OMB No. 3133–0129).

Executive Order 13132

Executive Order 13132 encourages independent regulatory agencies to consider the impact of their actions on state and local interests. In adherence to fundamental federalism principles, NCUA, an independent regulatory agency as defined in 44 U.S.C. 3502(5), voluntarily complies with the executive order. The executive order states that: ''National action limiting the policymaking discretion of the states shall be taken only where there is constitutional and statutory authority for the action and the national activity is appropriate in light of the presence of a problem of national significance.'' The risk of loss to federally insured credit

unions and the NCUSIF caused by actions of corporates are concerns of national scope. The final rule will help assure that proper safeguards are in place to ensure the safety and soundness of corporates.

The rule applies to all corporates that accept funds from federally insured credit unions. NCUA believes that the protection of such credit unions, and ultimately the NCUSIF, warrants application of the proposed rule to all corporates, including nonfederally insured. The rule does not impose additional costs or burdens on the states or affect the states' ability to discharge traditional state government functions. NCUA has determined that this rule may have an occasional direct effect on the states, on the relationship between the national government and the states, or on the distribution of power and responsibilities among the various levels of government. However, the potential risk to the NCUSIF without the final changes justifies them.

The Treasury and General Government Appropriations Act, 1999—Assessment of Federal Regulations and Policies on Families

The NCUA has determined that this rule will not affect family well-being within the meaning of section 654 of the Treasury and General Government Appropriations Act, 1999, Pub. L. 105–277, 112 Stat. 2681 (1998).

Agency Regulatory Goal

NCUA's goal is to promulgate clear and understandable regulations that impose minimal regulatory burden. The regulatory change is understandable and imposes minimal regulatory burden. NCUA requested comments on whether the proposed rule was understandable and minimally intrusive if implemented as proposed. No comments were received.

Small Business Regulatory Enforcement Fairness Act

The Small Business Regulatory Enforcement Fairness Act of 1996 (Pub. L. 104–121) provides generally for congressional review of agency rules. A reporting requirement is triggered in instances where NCUA issues a final rule as defined by Section 551 of the Administrative Procedure Act. 5 U.S.C. 551. The Office of Management and Budget is reviewing whether this rule is a major rule for purposes of the Small Business Regulatory Enforcement Fairness Act of 1996.

List of Subjects

12 CFR Part 703

Credit unions, Investments.

12 CFR Part 704

Credit unions, Reporting and recordkeeping requirements, Surety bonds.

By the National Credit Union Administration Board on October 17, 2002.

Becky Baker,

Secretary of the Board.

Accordingly, NCUA amends 12 CFR parts 703 and 704 as follows:

PART 703—INVESTMENT AND DEPOSIT ACTIVITIES

1. The authority citation for part 703 continues to read as follows:

Authority: 12 U.S.C. 1757(7), 1757(8), and 1757(15).

2. Amend § 703.100 paragraph (c) by revising the second and third sentences and adding a fourth sentence to read as follows:

§ 703.100 What investments and investment activities are permissible for me?

* * * * *

(c) * * * Your aggregate amount of paid-in capital and membership capital in one corporate credit union is limited to two percent of your assets measured at the time of investment or adjustment. Your aggregate amount of paid-in capital and membership capital in all corporate credit unions is limited to four percent of your assets measured at the time of investment or adjustment. Paid-in capital and membership capital are defined in part 704 of this chapter.

* * * * *

PART 704—CORPORATE CREDIT UNIONS

3. The authority citation for part 704 continues to read as follows:

Authority: 12 U.S.C. 1762, 1766(a), 1781, and 1789.

4. Amend § 704.2 as follows:

a. Remove the definition of ''*commercial mortgage related security*'', ''*correspondent services*'', ''*credit enhancement*'', ''*dealer bid indication*'', ''*expected maturity*'', ''*industry recognized information provider*'', ''*long term investment*'', ''*market price*'', ''*matched*'', ''*member paid-in capital*'', ''*mortgage servicing*'', ''*net interest income*'', ''*non member paid-in capital*'', ''*non secured obligation*'', ''*prepayment model*'', ''*real estate mortgage investment conduit (REMIC)*'', ''*reserve ratio*'', ''*reserves and undivided earnings*'', ''*short-term investment*'', and ''*trade association*'';

b. Revise the definitions of ''*capital*'', ''*collateralized mortgage obligation (CMO)*'', ''*fair value*'', ''*forward settlement*'', ''*membership capital*'', ''*mortgage related security*'', ''*paid-in capital*'', ''*regular-way settlement*'', ''*repurchase transaction*'', and ''*residual interest*'';

c. Amend the definitions of ''*asset-backed security*'' by revising the definition heading and the last sentence, and ''*net economic value (NEV)*'' by revising the second and third sentences; and

d. Add new definitions for ''*core capital*'', ''*core capital ratio*'', ''*limited liquidity investment*'', ''*obligor*'', ''*quoted market price*'', ''*retained earnings*'', and ''*retained earnings ratio*''.

§ 704.2 Definitions.

* * * * *

Asset-backed security (ABS) * * * This definition excludes mortgage related securities.

Capital means the sum of a corporate credit union's retained earnings, paid-in capital, and membership capital.

* * * * *

Collateralized mortgage obligation (CMO) means a multi-class mortgage related security.

Core capital means the corporate credit union's retained earnings and paid-in capital.

Core capital ratio means the corporate credit union's core capital divided by its moving daily average net assets.

* * * * *

Fair value means the amount at which an instrument could be exchanged in a current, arms-length transaction between willing parties, as opposed to a forced or liquidation sale. Quoted market prices in active markets are the best evidence of fair value. If a quoted market price in an active market is not available, fair value may be estimated using a valuation technique that is reasonable and supportable, a quoted market price in an active market for a similar instrument, or a current appraised value. Examples of valuation techniques include the present value of estimated future cash flows, option-pricing models, and option-adjusted spread models. Valuation techniques should incorporate assumptions that market participants would use in their estimates of values, future revenues, and future expenses, including assumptions about interest rates, default, prepayment, and volatility.

* * * * *

Forward settlement of a transaction means settlement on a date later than regular-way settlement.

* * * * *

Limited liquidity investment means a private placement or funding agreement.

* * * * *

Membership capital means funds contributed by members that: are adjustable balance with a minimum withdrawal notice of 3 years or are term certificates with a minimum term of 3 years; are available to cover losses that exceed retained earnings and paid-in capital; are not insured by the NCUSIF or other share or deposit insurers; and cannot be pledged against borrowings.

Mortgage related security means a security as defined in section 3(a)(41) of the Securities Exchange Act of 1934,15 U.S.C. 78c(a)(41), *e.g.*, a privately-issued security backed by mortgages secured by real estate upon which is located a dwelling, mixed residential and commercial structure, residential manufactured home, or commercial structure that is rated in one of the two highest rating categories by at least one nationally recognized statistical rating organization.

* * * * *

Net economic value (NEV) * * * All fair value calculations must include the value of forward settlements and embedded options. The amortized portion of membership capital and paid-in capital, which do not qualify as capital, are treated as liabilities for purposes of this calculation. * * *

Obligor means the primary party obligated to repay an investment, *e.g.*, the issuer of a security, the taker of a deposit, or the borrower of funds in a federal funds transaction. Obligor does not include an originator of receivables underlying an asset-backed security, the servicer of such receivables, or an insurer of an investment.

* * * * *

Paid-in capital means accounts or other interests of a corporate credit union that: are perpetual, non-cumulative dividend accounts; are available to cover losses that exceed retained earnings; are not insured by the NCUSIF or other share or deposit insurers; and cannot be pledged against borrowings.

* * * * *

Quoted market price means a recent sales price or a price based on current bid and asked quotations.

Regular-way settlement means delivery of a security from a seller to a buyer within the time frame that the securities industry has established for immediate delivery of that type of security. For example, regular-way settlement of a Treasury security includes settlement on the trade date (''cash''), the business day following the trade date (''regular way''), and the second business day following the trade date (''skip day'').

Repurchase transaction means a transaction in which a corporate credit union agrees to purchase a security from a counterparty and to resell the same or any identical security to that counterparty at a specified future date and at a specified price.

* * * * *

Residual interest means the remainder cash flows from a CMO or ABS transaction after payments due bondholders and trust administrative expenses have been satisfied.

Retained earnings means the total of the corporate credit union's undivided earnings, reserves, and any other appropriations designated by management or regulatory authorities. For purposes of this regulation, retained earnings does not include the allowance for loan and lease losses account, accumulated unrealized gains and losses on available for sale securities, or other comprehensive income items.

Retained earnings ratio means the corporate credit union's retained earnings divided by its moving daily average net assets.

* * * * *

5. Amend § 704.3 as follows:

a. Amend paragraph (a) by revising the paragraph heading;

b. Redesignate paragraphs (d) through (g) as paragraphs (e) through (h) and paragraph (b) as paragraph (d);

c. Remove paragraph (c);

d. Add paragraphs (b), (c), and (i); and

e. Revise redesignated paragraphs (e) heading, (e)(1) introductory text, (e)(2) and (e)(3)(iii) and (f).

§ 704.3 Corporate credit union capital.

(a) *Capital plan.* * * *

(b) *Requirements for membership capital*—(1) *Form.* Membership capital funds may be in the form of a term certificate or an adjusted balance account.

(2) *Disclosure.* The terms and conditions of a membership capital account must be disclosed to the recorded owner of the account at the time the account is opened and at least annually thereafter.

(i) The initial disclosure must be signed by either all of the directors of the member credit union or, if authorized by board resolution, the chair and secretary of the board; and

(ii) The annual disclosure notice must be signed by the chair of the corporate credit union. The chair must sign a statement that certifies that the notice has been sent to member credit unions with membership capital accounts. The certification must be maintained in the corporate credit union's files and be available for examiner review.

(3) *Three-year remaining maturity.* When a membership capital account has been placed on notice or has a remaining maturity of less than three years, the amount of the account that can be considered membership capital is reduced by a constant monthly amortization that ensures membership capital is fully amortized one year before the date of maturity or one year before the end of the notice period. The full balance of a membership capital account being amortized, not just the remaining non-amortized portion, is available to absorb losses in excess of the sum of retained earnings and paid-in capital until the funds are released by the corporate credit union at the time of maturity or the conclusion of the notice period.

(4) *Release.* Membership capital may not be released due solely to the merger, charter conversion or liquidation of a member credit union. In the event of a merger, the membership capital transfers to the continuing credit union. In the event of a charter conversion, the membership capital transfers to the new institution. In the event of liquidation, the membership capital may be released to facilitate the payout of shares with the prior written approval of the OCCU Director.

(5) *Sale.* A member may sell its membership capital to another member in the corporate credit union's field of membership, subject to the corporate credit union's approval.

(6) *Liquidation.* In the event of liquidation of a corporate credit union, membership capital is payable only after satisfaction of all liabilities of the liquidation estate, including uninsured share obligations to shareholders and the National Credit Union Share Insurance Fund (NCUSIF), but excluding paid-in capital.

(7) *Merger.* In the event of a merger of a corporate credit union, membership capital transfers to the continuing corporate credit union. The minimum three-year notice period for withdrawal of membership capital remains in effect.

(8) *Adjusted balance accounts:*

(i) May be adjusted no more frequently than once every six months; and

(ii) Must be adjusted in relation to a measure, *e.g.*, one percent of a member credit union's assets, established and disclosed at the time the account is opened without regard to any minimum withdrawal period. If the measure is other than assets, the corporate credit union must address the measure's permanency characteristics in its capital plan.

(iii) *Notice of withdrawal.* Upon written notice of intent to withdraw membership capital, the balance of the account will be frozen (no further adjustments) until the conclusion of the notice period.

(9) *Grandfathering.* Membership capital issued before the effective date of this regulation is exempt from the limitation of § 704.3(b)(8)(i).

(c) *Requirements for paid-in capital*—(1) *Disclosure.* The terms and conditions of any paid-in capital instrument must be disclosed to the recorded owner of the instrument at the time the instrument is created and must be signed by either all of the directors of the member credit union or, if authorized by board resolution, the chair and secretary of the board.

(2) *Release.* Paid-in capital may not be released due solely to the merger, charter conversion or liquidation of a member credit union. In the event of a merger, the paid-in capital transfers to the continuing credit union. In the event of a charter conversion, the paid-in capital transfers to the new institution. In the event of liquidation, the paid-in capital may be released to facilitate the payout of shares with the prior written approval of the OCCU Director.

(3) *Callability.* Paid-in capital accounts are callable on a pro-rata basis across an issuance class only at the option of the corporate credit union and only if the corporate credit union meets its minimum level of required capital and NEV ratios after the funds are called.

(4) *Liquidation.* In the event of liquidation of the corporate credit union, paid-in capital is payable only after satisfaction of all liabilities of the liquidation estate, including uninsured share obligations to shareholders, the NCUSIF, and membership capital holders.

(5) *Merger.* In the event of a merger of a corporate credit union, paid-in capital shall transfer to the continuing corporate credit union.

(6) *Paid-in capital.* Paid-in capital includes both member and nonmember paid-in capital.

(i) Member paid-in capital means paid-in capital that is held by the corporate credit union's members. A corporate credit union may not condition membership, services, or prices for services on a credit union's ownership of paid-in capital.

(ii) Nonmember paid-in capital means paid-in capital that is not held by the corporate credit union's members.

(7) *Grandfathering.* A corporate credit union's authority to include paid-in capital as a component of capital is governed by the regulation in effect at the time the paid-in capital was issued. When a grandfathered paid-in capital instrument has a remaining maturity of less than 3 years, the amount that may be considered paid-in capital is reduced by a constant monthly amortization that ensures the paid-in capital is fully amortized 1 year before the date of maturity. The full balance of grandfathered paid-in capital being amortized, not just the remaining non-amortized portion, is available to absorb losses in excess of retained earnings until the funds are released by the corporate credit union at maturity.

* * * * *

(e) *Individual capital ratio requirement*—(1) When significant circumstances or events warrant, the OCCU Director may require a different minimum capital ratio for an individual corporate credit union based on its circumstances. Factors that may warrant a different minimum capital ratio include, but are not limited to:

* * * * *

(2) When the OCCU Director determines that a different minimum capital ratio is necessary or appropriate for a particular corporate credit union, he or she will notify the corporate credit union in writing of the proposed capital ratio and the date by which the capital ratio must be reached. The OCCU Director also will provide an explanation of why the proposed capital ratio is considered necessary or appropriate.

(3) * * *

(iii) After the close of the corporate credit union's response period, the OCCU Director will decide, based on a review of the corporate credit union's response and other information concerning the corporate credit union, whether a different minimum capital ratio should be established for the corporate credit union and, if so, the capital ratio and the date the requirement must be reached. The corporate credit union will be notified of the decision in writing. The notice will include an explanation of the decision, except for a decision not to establish a different minimum capital ratio for the corporate credit union.

(f) *Failure to maintain minimum capital ratio requirement.* When a corporate credit union's capital ratio falls below the minimum required by paragraphs (d) or (e) of this section, or Appendix B to this part, as applicable, operating management of the corporate credit union must notify its board of directors, supervisory committee, and the OCCU Director within 10 calendar days.

* * * * *

(i) *Earnings retention requirement.* A corporate credit union must increase retained earnings if the prior month-end retained earnings ratio is less than 2 percent.

(1) Its retained earnings must increase:

(i) During the current month, by an amount equal to or greater than the monthly earnings retention amount; or

(ii) During the current and prior two months, by an amount equal to or greater than the quarterly earnings retention amount.

(2) Earnings retention amounts are calculated as follows:

(i) The monthly earnings retention amount is determined by multiplying the earnings retention factor by the prior month-end moving daily average net assets; and

(ii) The quarterly earnings retention amount is determined by multiplying the earnings retention factor by moving daily average net assets for each of the prior three month-ends.

(3) The earnings retention factor is determined as follows:

(i) If the prior month-end retained earnings ratio is less than 2 percent and the core capital ratio is less than 3 percent, the earnings retention factor is .15 percent per annum; or

(ii) If the prior month-end retained earnings ratio is less than 2 percent and the core capital ratio is equal to or greater than 3 percent, the earnings retention factor is .10 percent per annum.

(4) The OCCU Director may approve a decrease to the earnings retention amount if it is determined a lesser amount is necessary to avoid a significant adverse impact upon a corporate credit union.

(5) Operating management of the corporate credit union must notify its board of directors, supervisory committee, the OCCU Director and, if applicable, the state regulator within 10 calendar days of determining that the retained earnings ratio has declined below 2 percent. If the decline in the retained earnings ratio is due, in full or in part, to a decline in the dollar amount of retained earnings and the retained earnings ratio is not restored to at least 2 percent by the next month end, a retained earnings action plan is required to be submitted within 30 calendar days.

(6) The retained earnings action plan must be submitted to the OCCU Director and, if applicable, the state regulator and, at a minimum, include the following:

(i) Reasons why the dollar amount of retained earnings has decreased;

(ii) Description of actions to be taken to increase the dollar amount of retained earnings within specific time frames; and

(iii) Monthly balance sheet and income projections, including assumptions, for the next 12-month period.

6. Amend § 704.4 by removing the word ''operating'' wherever it appears in paragraphs (a) and (b) and revising paragraph (c) introductory text to read as follows:

§ 704.4 Board responsibilities.

* * * * *

(c) *Other requirements.* The board of directors of a corporate credit union must ensure:

* * * * *

7. Amend § 704.5 as follows:

a. Revise paragraphs (a)(1) and (2), (c)(5), (d)(1), (e)(1), (3) and (4), (f), and (h)(2) and(3);

b. Remove paragraphs (c)(6), (d)(3) and (d)(6);

c. Redesignate paragraphs (d)(4) and (d)(5) as paragraphs (d)(3) and (d)(4);

d. Revise redesignated paragraphs (d)(3) and the first sentence of (d)(4);

e. Add paragraph (h)(4); and

f. Add at the end of paragraph (c)(4) after the '';'' an ''and.''

§ 704.5 Investments.

(a) * * *

(1) Appropriate tests and criteria for evaluating investments and investment transactions before purchase; and

(2) Reasonable and supportable concentration limits for limited liquidity investments in relation to capital.

* * * * *

(c) * * *

(5) Domestically-issued asset-backed securities.

(d) * * *

(1) The corporate credit union, directly or through its agent, receives written confirmation of the transaction, and either takes physical possession or control of the repurchase securities or is recorded as owner of the repurchase securities through the Federal Reserve Book-Entry Securities Transfer System;

* * * * *

(3) The corporate credit union, directly or through its agent, receives daily assessment of the market value of the repurchase securities and maintains adequate margin that reflects a risk assessment of the repurchase securities and the term of the transaction; and

(4) The corporate credit union has entered into signed contracts with all approved counterparties and agents, and ensures compliance with the contracts.

* * *

(e) * * *

(1) The corporate credit union, directly or through its agent, receives written confirmation of the loan, obtains a first priority security interest in the collateral by taking physical possession or control of the collateral, or is recorded as owner of the collateral through the Federal Reserve Book-Entry Securities Transfer System;

* * * * *

(3) The corporate credit union, directly or through its agent, receives daily assessment of the market value of collateral and maintains adequate margin that reflects a risk assessment of the collateral and terms of the loan; and

(4) The corporate credit union has entered into signed contracts with all agents and, directly or through its agent, has executed a written loan and security agreement with the borrower. The corporate or its agent ensures compliance with the agreements.

(f) *Investment companies.* A corporate credit union may invest in an investment company registered with the Securities and Exchange Commission under the Investment Company Act of 1940 (15 U.S.C. 80a), provided that the prospectus of the company restricts the investment portfolio to investments and investment transactions that are permissible for that corporate credit union.

* * * * *

(h) * * *

(2) Engaging in trading securities unless accounted for on a trade date basis;

(3) Engaging in adjusted trading or short sales; and

(4) Purchasing stripped mortgage-backed securities, mortgage servicing rights, small business related securities, or residual interests in CMOs or asset-backed securities.

* * * * *

8. Amend § 704.6 by revising paragraph (a) introductory text and paragraphs (a)(3), (a)(4) and (b) through (e) to read as follows:

§ 704.6 Credit risk management.

(a) *Policies.* A corporate credit union must operate according to a credit risk management policy that is commensurate with the investment risks and activities it undertakes. The policy must address at a minimum:

* * * * *

(3) Maximum credit limits with each obligor and transaction counterparty, set as a percentage of capital. In addition to addressing deposits and securities, limits with transaction counterparties must address aggregate exposures of all transactions including, but not limited to, repurchase agreements, securities lending, and forward settlement of purchases or sales of investments; and

(4) Concentrations of credit risk (*e.g.*, originator of receivables, insurer, industry type, sector type, and geographic).

(b) *Exemption.* The requirements of this section do not apply to investments that are issued or fully guaranteed as to principal and interest by the U.S. government or its agencies or enterprises (excluding subordinated debt) or are fully insured (including accumulated interest) by the NCUSIF or Federal Deposit Insurance Corporation.

(c) *Concentration limits*—(1) *General rule.* The aggregate of all investments in any single obligor is limited to 50 percent of capital or $5 million, whichever is greater.

(2) *Exceptions.* Exceptions to the general rule are:

(i) Aggregate investments in repurchase and securities lending agreements with any one counterparty are limited to 200 percent of capital;

(ii) Investments in corporate CUSOs are subject to the limitations of § 704.11; and

(iii) Aggregate investments in corporate credit unions are not subject to the limitations of paragraph (c)(1) of this section.

(3) For purposes of measurement, each new credit transaction must be evaluated in terms of the corporate credit union's capital at the time of the transaction. An investment that fails a requirement of this section because of a subsequent reduction in capital will be deemed nonconforming. A corporate credit union is required to exercise reasonable efforts to bring nonconforming investments into conformity within 90 calendar days. Investments that remain nonconforming for 90 calendar days will be deemed to fail a requirement of this section and the corporate credit union will have to comply with § 704.10.

(d) *Credit ratings.*—(1) All investments, other than in a corporate credit union or CUSO, must have an applicable credit rating from at least one nationally recognized statistical rating organization (NRSRO).

(2) At the time of purchase, investments with long-term ratings must be rated no lower than AA– (or equivalent) and investments with short-term ratings must be rated no lower than A–1 (or equivalent).

(3) Any rating(s) relied upon to meet the requirements of this part must be identified at the time of purchase and must be monitored for as long as the corporate owns the investment.

(4) When two or more ratings are relied upon to meet the requirements of this part at the time of purchase, the board or an appropriate committee must place on the § 704.6(e)(1) investment watch list any investment for which a rating is downgraded below the minimum rating requirements of this part.

(5) Investments are subject to the requirements of § 704.10 if:

(i) One rating was relied upon to meet the requirements of this part and that rating is downgraded below the minimum rating requirements of this part; or

(ii) Two or more ratings were relied upon to meet the requirements of this part and at least two of those ratings are downgraded below the minimum rating requirements of this part.

(e) *Reporting and documentation.* (1) At least annually, a written evaluation of each credit limit with each obligor or transaction counterparty must be prepared and formally approved by the board or an appropriate committee. At least monthly, the board or an appropriate committee must receive an investment watch list of existing and/or potential credit problems and summary credit exposure reports, which demonstrate compliance with the corporate credit union's risk management policies.

(2) At a minimum, the corporate credit union must maintain:

(i) A justification for each approved credit limit;

(ii) Disclosure documents, if any, for all instruments held in portfolio. Documents for an instrument that has been sold must be retained until completion of the next NCUA examination; and

(iii) The latest available financial reports, industry analyses, internal and external analyst evaluations, and rating agency information sufficient to support each approved credit limit.

9. Amend § 704.7 by removing paragraphs (c) through (g), adding paragraphs (c) through (f) and redesignating paragraph (h) as paragraph (g) to read as follows:

§ 704.7 Lending.

* * * * *

(c) *Loans to members*—(1) *Credit unions.* (i) The maximum aggregate amount in unsecured loans and lines of credit to any one member credit union, excluding pass-through and guaranteed loans from the CLF and the NCUSIF, must not exceed 50 percent of capital.

(ii) The maximum aggregate amount in secured loans and lines of credit to any one member credit union, excluding those secured by shares or marketable securities and member reverse repurchase transactions, must not exceed 100 percent of capital.

(2) *Corporate CUSOs.* Any loan or line of credit must comply with § 704.11.

(3) *Other members.* The maximum aggregate amount of loans and lines of credit to any other one member must not exceed 15 percent of the corporate credit union's capital plus pledged shares.

(d) *Loans to nonmembers*—(1) *Credit unions.* A loan to a nonmember credit union, other than through a loan participation with another corporate credit union, is only permissible if the loan is for an overdraft related to the providing of correspondent services pursuant to § 704.12. Generally, such a loan will have a maturity of one business day.

(2) *Corporate CUSOs.* Any loan or line of credit must comply with § 704.11.

(e) *Member business loan rule.* Loans, lines of credit and letters of credit to:

(1) Member credit unions are exempt from part 723 of this chapter;

(2) Corporate CUSOs must comply with § 704.11; and

(3) Other members not excluded under § 723.1(b) of this chapter must comply with part 723 of this chapter unless the loan or line of credit is fully guaranteed by a credit union or fully secured by U.S. Treasury or agency securities. Those guaranteed and secured loans must comply with the aggregate limits of § 723.16 but are exempt from the other requirements of part 723.

(f) *Participation loans with other corporate credit unions.* A corporate credit union is permitted to participate in a loan with another corporate credit union provided the corporate retains an interest of at least 5 percent of the face amount of the loan and a master participation loan agreement is in place before the purchase or the sale of a participation. A participating corporate credit union must exercise the same due diligence as if it were the originating corporate credit union.

* * * * *

10. Amend § 704.8 as follows:

a. Remove paragraphs (a)(2), (a)(5) and (e);

b. Redesignate paragraphs (a)(3) and (a)(4) as (a)(2) and (a)(3), (a)(6) and (a)(7) as (a)(4) and (a)(5), and (f) and (g) as (e) and (f);

c. Add ''; and'' at the end of redesignated paragraph (a)(5) in place of the period;

d. Add paragraph (a)(6);

e. Revise redesignated paragraphs (a)(2), (e) and (f);

f. Add a sentence to the end of paragraph (c); and

g. Revise paragraphs (d)(1)(i) through (iii) and (d)(2) introductory text.

§ 704.8 Asset and liability management.

(a) * * *

(2) The maximum allowable percentage decline in net economic value (NEV), compared to base case NEV;

* * * * *

(6) The tests that will be used, prior to purchase, to estimate the impact of investments on the percentage decline in NEV, compared to base case NEV. The most recent NEV analysis, as determined under paragraph (d)(1)(i) of this section may be used as a basis of estimation.

* * * * *

(c) * * * This means the minimum penalty must be reasonably related to the rate that the corporate credit union would be required to offer to attract funds for a similar term with similar characteristics.

(d) * * *

(1) * * *

(i) Evaluate the risk in its balance sheet by measuring, at least quarterly, the impact of an instantaneous, permanent, and parallel shock in the yield curve of plus and minus 100, 200, and 300 basis points on its NEV and NEV ratio. If the base case NEV ratio falls below 3 percent at the last testing date, these tests must be calculated at least monthly until the base case NEV ratio again exceeds 3 percent;

(ii) Limit its risk exposure to levels that do not result in a base case NEV ratio or any NEV ratio resulting from the tests set forth in paragraph (d)(1)(i) of this section below 2 percent; and

(iii) Limit its risk exposures to levels that do not result in a decline in NEV of more than 15 percent.

(2) A corporate credit union must assess annually if it should conduct periodic additional tests to address market factors that may materially impact that corporate credit union's NEV. These factors should include, but are not limited to, the following:

* * * * *

(e) *Regulatory violations.* If a corporate credit union's decline in NEV, base case NEV ratio or any NEV ratio resulting from the tests set forth in paragraph (d)(1)(i) of this section violates the limits established by this rule and is not brought into compliance within 10 calendar days, operating management of the corporate credit union must immediately report the information to the board of directors, supervisory committee, and the OCCU Director. If any violation persists for 30 calendar days, the corporate credit

union must submit a detailed, written action plan to the OCCU Director that sets forth the time needed and means by which it intends to correct the violation. If the OCCU Director determines that the plan is unacceptable, the corporate credit union must immediately restructure the balance sheet to bring the exposure back within compliance or adhere to an alternative course of action determined by the OCCU Director.

(f) *Policy violations.* If a corporate credit union's decline in NEV, base case NEV ratio, or any NEV ratio resulting from the tests set forth in paragraph (d)(1)(i) of this section violates the limits established by its board, it must determine how it will bring the exposure within policy limits. The disclosure to the board of the violation must occur no later than its next regularly scheduled board meeting.

10a. Amend § 704.10 by revising the section heading and the first sentence of paragraph (a) to read as follows:

§ 704.10 Investment action plan.

(a) Any corporate credit union in possession of an investment, including a derivative, that fails to meet a requirement of this part must, within 30 calendar days of the failure, report the failed investment to its board of directors, supervisory committee and the OCCU Director. * * *

* * * * *

11. Amend § 704.11 by revising paragraph (b), redesignating paragraphs (c) through (e) as paragraphs (f) through (h), adding paragraphs (c), (d) and (e) and revising redesignated paragraph (g)(3) to read as follows:

§ 704.11 Corporate Credit Union Service Organizations (Corporate CUSOs).

* * * * *

(b) *Investment and loan limitations.* (1) The aggregate of all investments in member and nonmember corporate CUSOs must not exceed 15 percent of a corporate credit union's capital.

(2) The aggregate of all investments in and loans to member and nonmember corporate CUSOs must not exceed 30 percent of a corporate credit union's capital. A corporate credit union may lend to member and nonmember corporate CUSOs an additional 15 percent of capital if the loan is collateralized by assets in which the corporate has a perfected security interest under state law.

(3) If the limitations in paragraphs (b)(1) and (b)(2) of this section are reached or exceeded because of the profitability of the CUSO and the related GAAP valuation of the investment under the equity method without an additional cash outlay by the corporate, divestiture is not required. A corporate credit union may continue to invest up to the regulatory limit without regard to the increase in the GAAP valuation resulting from the corporate CUSO's profitability.

(4) The aggregate of all loans to corporate CUSOs must comply with the aggregate limit of § 723.16 of this chapter. This requirement does not apply to loans excluded under § 723.1(b).

(c) *Due diligence.* A corporate credit union must comply with the due diligence requirements of §§ 723.5 and 723.6(f) through (l) of this chapter for all loans to corporate CUSOs. This requirement does not apply to loans excluded under § 723.1(b).

(d) *Separate entity.* (1) A corporate CUSO must be operated as an entity separate from a corporate credit union.

(2) A corporate credit union investing in or lending to a corporate CUSO must obtain a written legal opinion that concludes the corporate CUSO is organized and operated in a manner that the corporate credit union will not reasonably be held liable for the obligations of the corporate CUSO. This opinion must address factors that have led courts to ''pierce the corporate veil,'' such as inadequate capitalization, lack of corporate identity, common boards of directors and employees, control of one entity over another, and lack of separate books and records.

(e) *Prohibited activities.* A corporate credit union may not use this authority to acquire control, directly or indirectly, of another depository financial institution or to invest in shares, stocks, or obligations of an insurance company, trade association, liquidity facility, or similar organization.

* * * * *

(g) * * *

(3) Obtain an annual CPA opinion audit and provide a copy to the corporate credit union. A wholly owned or majority owned CUSO is not required to obtain a separate annual audit if it is included in the corporate credit union's annual consolidated audit; and

* * * * *

12. Revise § 704.12 to read as follows:

§ 704.12 Permissible services.

(a) *Preapproved services.* A corporate credit union may provide to members the preapproved services set out in this section. NCUA may at any time, based upon supervisory, legal, or safety and soundness reasons, limit or prohibit any preapproved service. The specific activities listed within each preapproved category are provided as illustrations of activities permissible under the particular category, not as an exclusive or exhaustive list.

(1) *Correspondent services agreement.* A corporate credit union may only provide financial services to nonmembers through a correspondent services agreement. A correspondent services agreement is an agreement between two corporate credit unions, whereby one of the corporate credit unions agrees to provide services to the other corporate credit union or its members.

(2) *Credit and investment services.* Credit and investment services are advisory and consulting activities that assist the member in lending or investment management. These services may include loan reviews, investment portfolio reviews and investment advisory services.

(3) *Electronic financial services.* Electronic financial services are any services, products, functions, or activities that a corporate credit union is otherwise authorized to perform, provide or deliver to its members but performed through electronic means. Electronic services may include automated teller machines, online transaction processing through a website, website hosting services, account aggregation services, and internet access services to perform or deliver products or services to members.

(4) *Excess capacity.* Excess capacity is the excess use or capacity remaining in facilities, equipment or services that: a corporate credit union properly invested in or established, in good faith, with the intent of serving its members; and it reasonably anticipates will be taken up by the future expansion of services to its members. A corporate credit union may sell or lease the excess capacity in facilities, equipment or services, such as office space, employees and data processing.

(5) *Liquidity and asset and liability management.* Liquidity and asset and liability management services are any services, functions or activities that assist the member in liquidity and balance sheet management. These services may include liquidity planning and balance sheet modeling and analysis.

(6) *Operational services.* Operational services are services established to deliver financial products and services that enhance member service and promote safe and sound operations. Operational services may include tax payment, electronic fund transfers and providing coin and currency service.

(7) *Payment systems.* Payment systems are any methods used to facilitate the movement of funds for transactional purposes. Payment

systems may include Automated Clearing House, wire transfer, item processing and settlement services.

(8) *Trustee or custodial services.* Trustee services are services in which the corporate credit union is authorized to act under a written trust agreement to the extent permitted under part 724 of this chapter. Custodial and safekeeping services are services a corporate credit union performs on behalf of its member to act as custodian or safekeeper of investments.

(b) *Procedure for adding services that are not preapproved.* To provide a service to its members that is not preapproved by NCUA:

(1) A federal corporate credit union must request approval from NCUA. The request must include a full explanation and complete documentation of the service and how the service relates to a corporate credit union's authority to provide services to its members. The request must be submitted jointly to the OCCU Director and the Secretary of the Board. The request will be treated as a petition to amend § 704.12 and NCUA will request public comment or otherwise act on the petition within a reasonable period of time. Before engaging in the formal approval process, a corporate credit union should seek an advisory opinion from NCUA's Office of General Counsel as to whether a proposed service is already covered by one of the authorized categories without filing a petition to amend the regulation; and

(2) A state-chartered corporate credit union must submit a request for a waiver that complies with § 704.1(b) to the OCCU Director.

(c) *Prohibition.* A corporate credit union is prohibited from purchasing loan servicing rights.

§ 704.13 [Removed and Reserved]

13. Remove and reserve § 704.13.

14. Amend § 704.14 by revising paragraph (a) introductory text, redesignating paragraphs (b) through (d) as (c) through (e), and adding a new paragraph (b) to read as follows:

§ 704.14 Representation.

(a) *Board representation.* The board will be determined as stipulated in its bylaws governing election procedures, provided that:

* * * * *

(b) *Credit union trade association.* As used in this section, a credit union trade association includes but is not limited to, state credit union leagues and league service corporations and national credit union trade associations.

* * * * *

§ 704.18 [Amended]

15. Amend § 704.18(e)(1), including the table, by removing the words ''reserve ratio'' wherever they appear and adding in their place, the words ''core capital ratio'' and removing the words ''reserves and undivided'' wherever they appear adding in their place, the word ''retained.''

16. Amend § 704.19 by revising paragraph (b) and removing paragraph (c) as follows:

§ 704.19 Wholesale corporate credit unions.

* * * * *

(b) *Earnings retention requirement.* A wholesale corporate credit union must increase retained earnings if the prior month-end retained earnings ratio is less than 1 percent.

(1) Its retained earnings must increase:

(i) During the current month, by an amount equal to or greater than the monthly earnings retention amount; or

(ii) During the current and prior two months, by an amount equal to or greater than the quarterly earnings retention amount.

(2) Earnings retention amounts are calculated as follows:

(i) The monthly earnings retention amount is determined by multiplying the earnings retention factor by the prior month-end moving daily average net assets; and

(ii) The quarterly earnings retention amount is determined by multiplying the earnings retention factor by moving daily average net assets for each of the prior three month-ends.

(3) The earnings retention factor is determined as follows:

(i) If the prior month-end retained earnings ratio is less than 1 percent and the core capital ratio is less than 3 percent, the earnings retention factor is .15 percent per annum; or

(ii) If the prior month-end retained earnings ratio is less than 1 percent and the core capital ratio is equal to or greater than 3 percent, the earnings retention factor is .075 percent per annum.

(4) The OCCU Director may approve a decrease to the earnings retention amount set forth in this section if it is determined a lesser amount is necessary to avoid a significant adverse impact upon a wholesale corporate credit union.

(5) Operating management of the wholesale corporate credit union must notify its board of directors, supervisory committee, OCCU Director and, if applicable, the state regulator within 10 calendar days of determining the retained earnings ratio has declined below 1 percent. If the decline in the retained earnings ratio is due in full or in part, to a decline in the dollar amount of retained earnings and the retained earnings ratio is not restored to at least 1 percent by the next month end, a retained earnings action plan is required to be submitted within 30 calendar days.

(6) The retained earnings action plan must be submitted to the OCCU Director and, if applicable, the state regulator and, at a minimum, include the following:

(i) Reasons why the dollar amount of retained earnings has decreased;

(ii) Description of actions to be taken to increase the dollar amount of retained earnings within specific time frames; and

(iii) Monthly balance sheet and income projections, including assumptions for the ensuing 12-month period.

17. Revise Appendix A to part 704 as follows:

Appendix A to Part 704—Model Forms

This appendix contains sample forms intended for use by corporate credit unions to aid in compliance with the membership capital account and paid-in capital disclosure requirements of § 704.3.

SAMPLE FORM 1

Terms and Conditions of Membership Capital Account

(1) A membership capital account is not subject to share insurance coverage by the NCUSIF or other deposit insurer.

(2) A membership capital account is not releasable due solely to the merger, charter conversion or liquidation of the member credit union. In the event of a merger, the membership capital account transfers to the continuing credit union. In the event of a charter conversion, the membership capital account transfers to the new institution. In the event of liquidation, the membership capital account may be released to facilitate the payout of shares with the prior written approval of NCUA.

(3) A member credit union may withdraw membership capital with three years' notice.

(4) Membership capital cannot be used to pledge borrowings.

(5) Membership capital is available to cover losses that exceed retained earnings and paid-in capital.

(6) Where the corporate credit union is liquidated, membership capital accounts are payable only after satisfaction of all liabilities of the liquidation estate including uninsured obligations to shareholders and the NCUSIF.

(7) Where the corporate credit union is merged into another corporate credit union, the membership capital account will transfer to the continuing corporate credit union. The three-year notice period for withdrawal of the membership capital account will remain in effect.

(8) {If an adjusted balance account}: The membership capital balance will be adjusted ____(1 or 2)_____ time(s) annually in relation to the member credit union's _____ (assets or other measure) _____ as of _____(date(s))_____. {If a term certificate}: The membership capital account is a term certificate that will mature on _____(date)_____.

I have read the above terms and conditions and I understand them.

I further agree to maintain in the credit union's files the annual notice of terms and conditions of the membership capital account.

The notice form must be signed by either all of the directors of the member credit union or, if authorized by board resolution, the chair and secretary of the board of the credit union.

The annual disclosure notice form must be signed by the chair of the corporate credit union. The chair must then sign a statement that certifies that the notice has been sent to member credit unions with membership capital accounts. The certification must be maintained in the corporate credit union's files and be available for examiner review.

SAMPLE FORM 2

Terms and Conditions of Paid-In Capital

(1) A paid-in capital account is not subject to share insurance coverage by the NCUSIF or other deposit insurer.

(2) A paid-in capital account is not releasable due solely to the merger, charter conversion or liquidation of the member credit union. In the event of a merger, the paid-in capital account transfers to the continuing credit union. In the event of a charter conversion, the paid-in capital account transfers to the new institution. In the event of liquidation, the paid-in capital account may be released to facilitate the payout of shares with the prior written approval of NCUA.

(3) The funds are callable only at the option of the corporate credit union and only if the corporate credit union meets its minimum required capital and NEV ratios after the funds are called.

(4) Paid-in capital cannot be used to pledge borrowings.

(5) Paid-in capital is available to cover losses that exceed retained earnings.

(6) Where the corporate credit union is liquidated, paid-in capital accounts are payable only after satisfaction of all liabilities of the liquidation estate including uninsured obligations to shareholders and the NCUSIF, and membership capital holders.

(7) Where the corporate credit union is merged into another corporate credit union, the paid-in capital account will transfer to the continuing corporate credit union.

(8) Paid-in capital is perpetual maturity and noncumulative dividend.

I have read the above terms and conditions and I understand them. I further agree to maintain in the credit union's files the annual notice of terms and conditions of the paid-in capital instrument.

The notice form must be signed by either all of the directors of the credit union or, if authorized by board resolution, the chair and secretary of the board of the credit union.

18. Revise Appendix B to part 704 as follows:

Appendix B to Part 704—Expanded Authorities and Requirements

A corporate credit union may obtain all or part of the expanded authorities contained in this Appendix if it meets the applicable requirements of Part 704 and Appendix B, fulfills additional management, infrastructure, and asset and liability requirements, and receives NCUA's written approval. Additional guidance is set forth in the NCUA publication Guidelines for Submission of Requests for Expanded Authority.

A corporate credit union seeking expanded authorities must submit to NCUA a self-assessment plan supporting its request. A corporate credit union may adopt expanded authorities when NCUA has provided final approval. If NCUA denies a request for expanded authorities, it will advise the corporate credit union of the reason(s) for the denial and what it must do to resubmit its request. NCUA may revoke these expanded authorities at any time if an analysis indicates a significant deficiency. NCUA will notify the corporate credit union in writing of the identified deficiency. A corporate credit union may request, in writing, reinstatement of the revoked authorities by providing a self-assessment plan detailing how it has corrected the deficiency.

Minimum Requirement

In order to participate in any of the authorities set forth in Base-Plus, Part I, Part II, Part III, Part IV, and Part V of this Appendix, a corporate credit union must evaluate monthly the changes in NEV and the NEV ratio for the tests set forth in § 704.8(d)(1)(i).

Base-Plus

A corporate that has met the requirements for this Base-plus authority may, in performing the rate stress tests set forth in § 704.8(d)(1)(i), allow its NEV to decline as much as 20 percent.

Part I

(a) A corporate credit union that has met the requirements for this Part I may:

(1) Purchase investments with long-term ratings no lower than A– (or equivalent);

(2) Purchase investments with short-term ratings no lower than A–2 (or equivalent), provided that the issuer has a long-term rating no lower than A– (or equivalent) or the investment is a domestically-issued asset-backed security;

(3) Engage in short sales of permissible investments to reduce interest rate risk;

(4) Purchase principal only (PO) stripped mortgage-backed securities to reduce interest rate risk; and

(5) Enter into a dollar roll transaction.

(b) Aggregate investments in repurchase and securities lending agreements with any one counterparty are limited to 300 percent of capital.

(c) In performing the rate stress tests set forth in § 704.8(d)(1)(i), the NEV of a corporate credit union that has met the requirements of this Part I may decline as much as:

(1) 20 percent;

(2) 28 percent if the corporate credit union has a 5 percent minimum capital ratio and is specifically approved by NCUA; or

(3) 35 percent if the corporate credit union has a 6 percent minimum capital ratio and is specifically approved by NCUA.

(d) The maximum aggregate amount in unsecured loans and lines of credit to any one member credit union, excluding pass-through and guaranteed loans from the CLF and the NCUSIF, must not exceed 100 percent of the corporate credit union's capital. The board of directors must establish the limit, as a percent of the corporate credit union's capital plus pledged shares, for secured loans and lines of credit.

Part II

(a) A corporate credit union that has met the requirements for this Part II may:

(1) Purchase investments with long-term ratings no lower than BBB (flat) (or equivalent). The aggregate of all investments rated BBB+ (or equivalent) or lower in any single obligor is not to exceed 25 percent of capital;

(2) Purchase investments with short-term ratings no lower than A–2 (or equivalent), provided that the issuer has a long-term rating no lower than BBB (flat) (or equivalent) or the investment is a domestically issued asset-backed security;

(3) Engage in short sales of permissible investments to reduce interest rate risk;

(4) Purchase principal only (PO) stripped mortgage-backed securities to reduce interest rate risk; and

(5) Enter into a dollar roll transaction.

(b) Aggregate investments in repurchase and securities lending agreements with any one counterparty are limited to 400 percent of capital.

(c) In performing the rate stress tests set forth in § 704.8(d)(1)(i), the NEV of a corporate credit union which has met the requirements of this Part II may decline as much as:

(1) 20 percent;

(2) 28 percent if the corporate credit union has a 5 percent minimum capital ratio and is specifically approved by NCUA; or

(3) 35 percent if the corporate credit union has a 6 percent minimum capital ratio and is specifically approved by NCUA.

(d) The maximum aggregate amount in unsecured loans and lines of credit to any one member credit union, excluding pass-through and guaranteed loans from the CLF and the NCUSIF, must not exceed 100 percent of the corporate credit union's capital. The board of directors must establish the limit, as a percent of the corporate credit union's capital plus pledged shares, for secured loans and lines of credit.

Part III

(a) A corporate credit union that has met the requirements of either Part I or Part II of this Appendix and the additional requirements for Part III may invest in:

(1) Debt obligations of a foreign country;

(2) Deposits and debt obligations of foreign banks or obligations guaranteed by these banks;

(3) Marketable debt obligations of foreign corporations. This authority does not apply to debt obligations that are convertible into the stock of the corporation; and

(4) Foreign issued asset-backed securities.

(b) All foreign investments are subject to the following requirements:

(1) Investments must be rated no lower than the minimum permissible domestic rating under the corporate credit union's Part I or Part II authority;

(2) A sovereign issuer, and/or the country in which an obligor is organized, must have a long-term foreign currency (non-local currency) debt rating no lower than AA– (or equivalent);

(3) For each approved foreign bank line, the corporate credit union must identify the specific banking centers and branches to which it will lend funds;

(4) Obligations of any single foreign obligor may not exceed 50 percent of capital; and

(5) Obligations in any single foreign country may not exceed 250 percent of capital.

Part IV

(a) A corporate credit union that has met the requirements for this Part IV may enter into derivative transactions specifically approved by NCUA to:

(1) Create structured products;

(2) Manage its own balance sheet; and

(3) Hedge the balance sheets of its members.

(b) Credit Ratings:

(1) All derivative transactions are subject to the following requirements:

(i) If the counterparty is domestic, the counterparty rating must be no lower than the minimum permissible rating for comparable term permissible investments; and

(ii) If the counterparty is foreign, the corporate must have Part III expanded authority and the counterparty rating must be no lower that the minimum permissible rating for a comparable term investment under Part III Authority.

(iii) Any rating(s) relied upon to meet the requirements of this part must be identified at the time the transaction is entered into and must be monitored for as long as the contract remains open.

(iv) Section 704.10 of this part if:

(A) one rating was relied upon to meet the requirements of this part and that rating is downgraded below the minimum rating requirements of this part; or

(B) two or more ratings were relied upon to meet the requirements of this part and at least two of those ratings are downgraded below the minimum rating requirements of this part.

(2) Exceptions. Credit ratings are not required for derivative transactions with:

(i) Domestically chartered credit unions;

(ii) U.S. government sponsored enterprises; or

(iii) Counterparties if the transaction is fully guaranteed by an entity with a minimum permissible rating for comparable term investments.

Part V

A corporate credit union that has met the requirements for this Part V may participate in loans with member natural person credit unions as approved by the OCCU Director and subject to the following:

(a) The maximum aggregate amount of participation loans with any one member credit union must not exceed 25 percent of capital; and

(b) The maximum aggregate amount of participation loans with all member credit unions will be determined on a case-by-case basis by the OCCU Director.

§§ 704.3, 704.10, 704.15 [Amended]

19. In addition to the amendments set forth above, in 12 CFR part 704 remove the acronym ''NCUA'' wherever it appears and add in their place, the words ''the OCCU Director'' in the following places:

a. Redesignated § 704.3(e)(3)(i) and (ii), (g)(2)(v) and (g)(3).

b. Section 704.10(a) introductory text, (b) and (c).

c. Section 704.15(a) and (b).

[FR Doc. 02–26902 Filed 10–24–02; 8:45 am]

BILLING CODE 7535–01–P

Federal Register

Friday,
October 25, 2002

Part III

Department of Transportation

Federal Aviation Administration

14 CFR Parts 91 and 136

National Parks Air Tour Management; Final Rule

DEPARTMENT OF TRANSPORTATION

Federal Aviation Administration

14 CFR Parts 91 and 136

[Docket No. FAA–2001–8690]

RIN 2120–AF46

National Parks Air Tour Management

AGENCY: Federal Aviation Administration (FAA), DOT.

ACTION: Final rule.

SUMMARY: The FAA is codifying the provisions of title VIII of the National Parks Air Tour Management Act of 2000 (the Act), as a new part of its regulations. This action finalizes, in cooperation with the National Park Service, a 5,000-ft. above ground level (AGL) altitude that completes the definition of ''commercial air tour operation'' as required by the Act. If an operator conducts an operation below 5,000 ft. AGL over a national park, and that operation otherwise meets the statutory definition of a commercial air tour operation, that operator is defined as a commercial air tour operator and is required to meet the requirements of the Act and the new regulations. This final rule also codifies the provisions of Special Federal Aviation Regulation 78, the prohibition against commercial air tour flights over the Rocky Mountain National Park, as part of the new regulations. This action completes the codification of the new regulations and presents it for public information.

DATES: This final rule is effective January 23, 2003. All operators seeking to conduct commercial air tour operations, as defined by the Act, must file an application for operating authority and have interim operating authority before January 23, 2003 in order to avoid a break in operations.

FOR FURTHER INFORMATION CONTACT: Kent Stephens, Air Transportation Division, Flight Standards Service, Federal Aviation Administration, 800 Independence Avenue, SW., Washington, DC 20591; Telephone: (202) 267–7493.

SUPPLEMENTARY INFORMATION:

Availability of Rulemaking Documents

You can get an electronic copy using the Internet by taking the following steps:

(1) Go to the search function of the Department of Transportation's electronic Docket Management system (DMS) Web page (*http://dms.dot.gov/search*).

(2) On the search page, type in the last four digits of the Docket number shown at the beginning of this document. Click on ''search''.

(3) On the next page, which contains the Docket summary information for the Docket you selected, click on the item you wish to view.

You can also get an electronic copy using the Internet through the FAA's web page at *http://www.faa.gov/avr/arm/nprm/nprm.htm* or the Government Printing Office's Web page at *http://www.access.gpo.gov/su_docs/aces/acrs140.htm.*

You can also get a copy of this final rule by mail by submitting a request to the Federal Aviation Administration, Office of Rulemaking, 800 Independence Avenue, SW., Washington, DC 20591, or by calling (202) 267–9680.

Small Business Regulatory Enforcement Fairness Act

The Small Business Regulatory Enforcement Fairness Act (SBREFA) of 1996 requires FAA to comply with small entity requests for information or advice about compliance with statutes and regulations within its jurisdiction. Therefore, any small entity that has a question regarding this document may contact its local FAA official, or the person listed under **FOR FURTHER INFORMATION CONTACT.** You can find out more about SBREFA on the Internet at our site, *http://www.gov/avr/arm/sbrefa.htm*. For more information on SBREFA, e-mail us at *9–AWA–SBREFA@faa.gov*.

Background

The National Parks Air Tour Management Act of 2000

The National Parks Air Tour Management Act of 2000 (the Act) was enacted on April 5, 2000, as Public Law 106–181. The Act applies to ''commercial air tour operations'' occurring over a unit of the national park system or tribal lands within or abutting a national park. A commercial air tour operation is defined in the Act as ''any flight conducted for compensation or hire in a powered aircraft where a purpose of the flight is sightseeing over a national park, within ½ mile outside the boundary of any national park, or over tribal lands, during which the aircraft flies—(i) below a minimum altitude, determined by the Administrator in cooperation with the Director, above ground level (except solely for purposes of takeoff or landing, or necessary for safe operation of aircraft as determined under the rules and regulations of the Federal Aviation Administration requiring the pilot-in-command to take action to ensure the safe operation of the aircraft), or (ii) less than 1 mile laterally from any geographic feature within the park (unless more than ½ mile outside the boundary).'' *See* 49 U.S.C. Section 40128(f)(4)(A). In making the determination as to whether a flight is a commercial air tour operation, the Act lists eight factors that the Administrator may consider. Id. at 40128(f)(4)(B). The term ''tribal lands'' is defined in the Act as ''Indian Country (as that term is defined in section 1151 of title 18) that is within or abutting a national park.'' The term ''National Park'' is defined in the Act as ''any unit of the National Park System.'' [1] All commercial air tour operations must be conducted in accordance with the following: (1) Title 49 of the U.S. Code (U.S.C.) Section 40128; (2) conditions and limitations prescribed for that operator by the FAA; and (3) any applicable air tour management plans (ATMPs).

The Act states that ''Before commencing commercial air tour operations over a national park or tribal lands, a commercial air tour operator shall apply to the Administrator for authority to conduct the operations over the park or tribal lands.'' *See* 49 U.S.C. Section 40128(a)(2)(A). This application then triggers the process for the FAA, in cooperation with the National Park Service (NPS), to develop an ATMP for that park or tribal lands. The objective of an ATMP is to ''develop acceptable and effective measures to mitigate or prevent the significant adverse impacts, if any, of commercial air tour operations upon the natural and cultural resources, visitor experiences, and tribal lands.'' *See* 49 U.S.C. Section 40128(b)(1)(B).

The Act also provides that ''upon application for operating authority, the Administrator shall grant interim operating authority under [49 U.S.C. Section 40128(c)] to a commercial air tour operator for commercial air tour operations over a national park or tribal lands for which the operator is an existing commercial air tour operator.'' *See* 49 U.S.C. Section 40128(c)(1). Such interim operating authority is subject to a number of requirements and limitations, including a limit on the number of commercial air tour operations that may be conducted on an interim basis pending issuance of the ATMP for that park.

In Section 802 of the Act, Congress found that the FAA has the authority ''to preserve, protect and enhance the environment by minimizing, mitigating,

[1] There are currently 384 units of the National Park System in the United States. For a complete listing of all units of the National Park System see *http://www.nps.gov/legacy/nomenclature.html.*

or preventing the adverse effects of aircraft overflights, on public and tribal lands.'' Congress also found that the NPS has the responsibility of ''conserving the scenery and natural and historic objects and wildlife in national parks and of providing for the enjoyment of the national parks in ways that leave the national parks unimpaired for future generations.'' *Id.* Further, the Act states that ''the protection of tribal lands from aircraft overflights is consistent with protecting the public health and welfare and is essential to the maintenance of the natural and cultural resources of Indian tribes.'' *Id.*

The FAA's and NPS' Proposed Altitude and Comments Received on That Altitude

To meet the requirements of the Act, the FAA, in cooperation with the NPS, proposed an altitude of 5,000 ft. AGL that would complete the definition of a commercial air tour operation. (*See* 66 FR 21264; April 27, 2001.) The comment period on the proposal closed on June 11, 2001.

Approximately 2,400 comments were received on the proposal. The vast majority of these, however, are form letters making 4 major points: (1) They support the 5,000-ft. triggering altitude; (2) they believe that the FAA should recognize the NPS' expertise on natural quiet issues; (3) they urge immediate enforcement of the ''no new entrant'' clause of the Act and ask the FAA to ban those part 91 operators who did not register within 90 days of enactment of the Act; and (4) they ask the FAA to define the process by which ATMPs will be developed. Some of these points are also supported by environmental associations. National Parks Conservation Association (NPCA) encourages the FAA to adopt the proposed 5,000-ft. AGL altitude expeditiously so that the ATMP process may begin. NPCA is concerned that a lower altitude would allow some fixed-wing aircraft to conduct air tours without being subject to any rules or restrictions. NPCA also urges the FAA to clarify the ATMP process through guidance and to clarify the roles of the FAA and NPS in the process. Winter Wildlands Alliance supports the 5,000-ft. altitude because it will not interfere with general aviation traffic since operators must meet the rest of the definition of a commercial air tour operation to be defined as a commercial air tour operation under the Act. The Alliance also asks the FAA to begin immediate enforcement of the ''no new entrant'' clause. Jackson Hole Conservation Alliance comments that any altitude lower than 5,000 ft. would be unacceptable because it would invite uncontrolled damage to wildlife.

FAA Response: The FAA recognizes the support of the 5,000-ft. triggering altitude submitted by the majority of commenters either through individual comments or a form letter. The FAA and NPS will work together to develop ATMPs that mitigate or prevent significant adverse impacts on the environment. This cooperative relationship is consistent with the findings of Congress enumerated in Section 802 as follows:

—The FAA has sole authority to control airspace over the United States and the authority to preserve, protect, and enhance the environment by minimizing, mitigating, or preventing the adverse effects of aircraft overflights on public and tribal lands;

—the NPS has the responsibility of conserving the scenery and natural and historical objects and wildlife in national parks and of providing for the enjoyment of the national parks in ways that leave the national parks unimpaired for future generations.

The Act includes procedural requirements for establishing ATMPs, including holding at least one public meeting, publishing the proposed ATMP in the **Federal Register** for public comment, and soliciting the participation of Indian tribes whose tribal lands are, or may be, overflown by aircraft involved in a commercial air tour operation. 49 U.S.C. Section 40128(b)(4). Additionally, the Act provides that in establishing ATMPs the FAA is the ''lead agency'' and the NPS is a ''cooperating agency'' for purposes of compliance with regulations of the Council on Environmental Quality implementing the National Environmental Policy Act (NEPA). 49 U.S.C. Section 40128(b)(4)(C). In accordance with these provisions, the FAA and the NPS are working cooperatively to implement the Act.

The definition of a commercial air tour operation is complete with the publication of this final rule. All operators wishing to conduct commercial air tour operations over a unit of the national park system or tribal lands now have 90 days to apply for operating authority, in accordance with the procedures outlined in an advisory circular (AC). This AC may be obtained from the public docket, by calling the person listed under **FOR FURTHER INFORMATION CONTACT,** or on the Internet site established for the ATMP process: *http://www.atmp.faa.gov.*

The FAA earlier informed air tour operators of the requirements of the Act in a **Federal Register** notice published on May 26, 2000. However, in that notice, the FAA acknowledged that the definition of a commercial air tour operation was not yet complete. That definition is now complete and any operator defined as an air tour operator must obtain a part 135 or part 121 certificate, as appropriate, and operating authority if it operates over a national park.

In response to commenters' concerns about ''new entrants'', the Act authorizes the FAA, in cooperation with the NPS, to grant interim operating authority to new entrant air tour operators under certain circumstances and subject to certain limitations. See 49 U.S.C. Section 40128(c)(3). This provision of the Act is restated in Section 136.11(c) of this final rule.

Comment: Some individual commenters find the 5,000-ft. triggering altitude to be too restrictive and fear that it will capture flights other than commercial air tours, such as pilot training flights, while over a park. Another commenter is concerned that the altitude and related definitions of an air tour operator will allow some part 91 operators to slide through a loophole and not be governed by the regulations. One commenter expresses concern that, once in place, the restrictions on flying over parks would be extended to general aviation users, which in this instance would require burdensome deviations to fly over his State. Air Maui, a commercial operator, comments that there is no justification for the 5,000-ft. altitude and that a triggering altitude should be set by particular park or area.

Arizona Grand Canyon Chapter of the Sierra Club recommends careful scrutiny of point-to-point services that claim to not be air tour operators.

FAA Response: The law requires an altitude to be set by the Administrator to complete the definition of a commercial air tour operation. Once the definition is established, the operators covered by the definition can file for operating authority. The application for operating authority then triggers the ATMP process. Once established, an ATMP may, among other things, establish maximum or minimum altitudes—below the 5,000 ft. trigger altitude—for commercial air tour operations over the national park unit. Neither the FAA nor the NPS has the authority to extend the provisions of the Act to flights other than commercial air tour operations. Only Congress could effect such a change. Training flights and part 91 flights that are not commercial air tour operations are not captured under the Act. Criteria to determine whether a flight meets the definition are spelled out in the Act and

codified in the regulations at 14 CFR Section 136.3(d)(2). The Administrator may consider additional criteria in any specific circumstance. See 14 CFR Section 136.3(d)(2)(viii).

Comment: Many individuals do not understand the 5,000-ft. proposal as a triggering altitude but assumed that this is a proposed minimum operating altitude for parks in general. Most of these individuals support a 5,000-ft. minimum operating altitude over parks. A few individuals urge a ban on overflights of national parks. In addition, one of these individuals specifically recommends no flights at all below 16,000-ft. AGL if a total ban on commercial air tours over parks is not implemented. Another person's preference is that aircraft fly at altitudes and distances to prevent any noise pollution to the parks. One person recommends including non-motorized aircraft as part of that park overflight ban.

FAA response: Again, the law requires that the Administrator set the altitude to complete the definition of a commercial air tour operation. The FAA believes it is clear that the triggering altitude is to be used only to determine which air tour flights will be subject to this specific regulation. The suggestion to set a 16,000-ft. altitude is beyond the scope of the NPRM. The Act does not attempt to impose a ban over all units of the national park system, though a specific ATMP may ban commercial air tour operations (below 5,000 ft. AGL) over some or all of a particular park. The FAA knows of no commercial air tour operation that uses non-motorized aircraft. In any event, one element of the statutory definition of a ''commercial air tour operation'' is that it is conducted in a ''powered aircraft.'' See 49 U.S.C. Section 40128(f)(4)(A).

Comment: One individual supports the 5,000-ft. triggering altitude, but raises the issue of how to deal with air carriers who must fly below that altitude for landing and takeoff when there is an airport within a park, such as Jackson Hole Airport in Wyoming. A few people propose exclusion for air tours operating out of Jackson Hole Airport since it is in Grand Teton National Park.

FAA response: The Act specifically states that aircraft may descend below the altitude set by the FAA, in cooperation with NPS, for purposes of take-off and landing. See 49 U.S.C. Section 40128(f)(4)(A)(i). Thus, for example, if an air carrier flight is operating below 5,000 ft. AGL above a unit of the National Park System, but that operation is strictly for purposes of takeoff and landing at an airport in or near the park, then such a flight is not a ''commercial air tour operation.'' A Jackson Hole airport exclusion is not part of this rulemaking.

Comment: Another individual is concerned about how the number of operations performed by interim operators is counted. This commenter encourages the use of financial records to document actual flights conducted to protect the honest operator.

FAA response: The method that the Principal Operations Inspector for each operator will use in determining the number of actual flights that the operator conducted will be spelled out in a procedures manual being developed by the FAA. Financial records will certainly be one of the sources used, along with aircraft log books, flight plans, maintenance records, etc., in the determination of interim operating authorizations.

Comment: Nevada Commercial Aviation Council for Tourism supports the 5,000-ft. altitude and the exclusion of flying over the Lake Mead area as a transportation route from the ATMP process.

FAA response: Lake Mead is a unit of the national park system and is thus included in the ATMP process by the terms of the Act. The Act excludes flights over or near the Lake Mead Recreational Area that are solely for transportation to conduct a commercial air tour over the Grand Canyon. The Act states the factors to be used in determining whether a flight is a commercial air tour operation.

Comment: Helicopter Association International expresses no opinion on the 5,000-ft. triggering altitude, but notes that since most helicopter operations are conducted below 5,000 feet, this will not serve as an effective way of distinguishing helicopter air tour operations from other helicopter operations. One individual opposes unregulated helicopter tours due to noise impacts to visitors, fire danger, and negative impacts to wildlife.

FAA response: The ATMP process will take into consideration all effects of commercial air tour operations, whether fixed wing or rotary wing. The Act specifies additional criteria, other than altitude, for determining whether or not an operation is a commercial air tour operation.

Comment: National Air Transportation Association (NATA) and Aircraft Owners and Pilots Association (AOPA) recommend a triggering altitude of 3,000 ft. AGL. AOPA remarks that 3,000 ft. AGL is the start altitude for visual flight rules (VFR) cruising altitudes and this lower trigger altitude will better separate the commercial air tour aircraft from general aviation, avoiding an intermix with other higher altitude aircraft. AOPA notes that the National Parks Overflights Working Group (NPOWG) recommended 5,000-ft. AGL altitude only as a ''place holder'' that would be identified in association with other triggering altitudes that they considered. AOPA expresses concern that this altitude may be used to justify future restrictions on aircraft overflights. AOPA also commends the FAA for including the limited exemption for part 91 operators codified in the Act. Other commenters state that the 5,000-ft. AGL altitude is too restrictive, unnecessary and unreasonable and recommend alternative altitudes such as 2,000, 2,500 and 3,000 ft. AGL.

FAA response: A trigger altitude of 3,000 ft. AGL will not separate air tour traffic from general aviation. Nothing in the Act or this final rule requires general aviation operations to fly above the triggering altitude, regardless of whether that trigger altitude is 3,000 ft. AGL or 5,000 ft. AGL as proposed and adopted here. The FAA believes the 5,000-ft. trigger altitude reasonably captures any viable air tour traffic over a unit of the National Park System. The FAA agrees with the National Parks Conservation Association that the 5,000-ft. altitude is reasonable in that some fixed wing aircraft could possibly conduct a viable air tour above 3,000 ft. and not be ''captured'' in the definition, whereas a 3,000 ft. altitude would capture virtually all rotor wing aircraft. The Act does not authorize the FAA or NPS to evaluate significant adverse impacts of non commercial air tour operations.

Comment: Finally, one person recommends the NPS work with the FAA to implement relevant provisions of the Glacier National Park General Management Plan that would ban commercial air tours over the park.

FAA response: The General Management Plan will be a consideration in the development of any ATMP at Glacier National Park.

The Final Rule

In this rulemaking, the FAA establishes 5,000 feet AGL as the altitude that completes the definition of the term ''commercial air tour operation.'' Therefore, any flight conducted for compensation or hire in a powered aircraft where a purpose of the flight is sightseeing over a national park, within ½ mile outside the boundary of any national park, or over tribal lands during which the aircraft flies below 5,000 feet above ground level (except solely for purposes of takeoff or landing, or necessary for safe operation of an aircraft as determined

under the rules and regulations of the Federal Aviation Administration requiring the pilot-in-command to take action to ensure the safe operation of the aircraft), or less than 1 mile laterally from any geographic feature within the park (unless more than ½ mile outside the boundary) would be subject to the provisions of the Act and the new part 136.

The 5,000-ft. AGL altitude addresses the great majority of current and potential commercial air tour operations over national park units. In addition, the NPOWG, which met from May 1997 through December 1997, considered a number of possible minimum altitudes and recommended that the minimum altitude be set at 5,000 ft. AGL. The Act acknowledged their efforts stating; ''this title reflects the recommendations made by that Group.'' See Section 802 of the Act.

The FAA reminds readers that the 5,000-ft. altitude completes the definition of commercial air tour operation. This final rule notifies operators conducting commercial air tour operations, as defined in the Act, that such operations are subject to the provisions of the Act. Because this definition is now complete, Section 136.7 requires commercial air tour operators to apply for operating authority. Application by a person to conduct a commercial air tour operation over a unit of the National Park System triggers the ATMP process. It does not mean that all air tour operations will be required to be conducted above 5,000 ft. AGL or that they will be limited to that minimum altitude. Rather the air tour management plan for any given national park unit will define the altitudes (below 5,000 ft. AGL) at which operations may be conducted.

Environmental Review

The Act provides that the objective of an ATMP is to ''mitigate or prevent the significant adverse impacts, if any, of commercial air tour operations upon the natural and cultural resources, visitor experiences, and tribal lands.'' *See* 49 U.S.C. Section 40128(b)(a)(B). Accordingly, this final rule supports this statutory objective and promotes the goal of avoiding any significant adverse environmental impacts from commercial air tour operations.

In accordance with FAA Order 1050.1D, the FAA has determined that this final rule is categorically excluded from environmental review under section 102(2)(C) of the National Environmental Policy Act (NEPA). In particular, this determination is based on FAA Order 1050.1D, Appendix 4, paragraph 4.i, which applies to ''[r]egulatory documents which cover administrative or procedural requirements,'' and paragraph 4.j, which covers ''[r]egulations, standards, and exemptions (excluding those which if implemented may cause a significant impact on the human environment).''

NEPA compliance will be performed as part of the development of each ATMP prepared in accordance with this rule.

Economic Summary

Changes to Federal regulations must undergo several economic analyses. First, Executive Order 12866 directs that each Federal agency shall propose or adopt a regulation only upon a reasoned determination that the benefits of the intended regulation justify its costs. Second, the Regulatory Flexibility Act of 1980 requires agencies to analyze the economic effect of regulatory changes on small entities. Third, the Trade Agreement Act of 1979 directs agencies to assess the effect of regulatory changes on international trade. Fourth, Public Law 104–4 requires federal agencies to assess the impact of any federal mandates on state, local, tribal governments, and the private sector. The FAA has determined that this rule is not a ''significant regulatory action'' under section 3(f) of Executive Order 12866 and Department of Transportation policies and procedures (44FR11034, February 26, 1979). This final rule would not have a significant impact on a substantial number of small entities. In addition, this rule would not constitute a barrier to international trade. Finally, the FAA has determined that the rule would not impose a federal mandate on state, local, or tribal governments, or the private sector of $100 million per year.

Benefit—Cost Analysis

This final rule codifies in new part 136 the applicable provisions of the Act concerning commercial air tour operations over national parks or within ½ mile of the boundary of a national park, over tribal lands within or abutting national parks, or less than 1 mile laterally from any geographic feature within the park. The Act and the rule specifically exclude the Grand Canyon National Park and tribal lands within or abutting it, air transportation routes over the Lake Mead area, and land or waters located in Alaska. Congress directed the FAA, in cooperation with the NPS, to determine the minimum altitude under which commercial air tour operations would be subject to the provisions of the statute. An altitude of 5,000 ft. AGL completes the definition of a commercial air tour operation to determine who will be subject to part 136. The 5,000-ft. AGL altitude addresses the great majority of current and potential commercial air tour operations over national park units. In addition, the NPOWG, which met from May 1997 through December 1997, considered a number of possible minimum altitudes and recommended that the minimum altitude be set at 5,000 ft. AGL.

These new regulations simply codify statutory provisions from Public Law 106–181, and finalize Congress' directive that the Administrator determine an altitude to complete the definition set forth in 49 U.S.C. Section 40128 (f)(4)(A). The primary benefit of the regulations will be to enable the FAA and the NPS to develop acceptable and effective measures to mitigate or prevent the significant adverse effects, if any, of commercial air tour operations upon the natural and cultural resources, visitor experiences, and tribal lands.

The costs and benefits of this rule cannot be evaluated effectively without taking into account specific noise mitigation measures that would be incorporated in an ATMP for a specific park. The NPS and FAA thus intend to prepare such evaluations when specific plans specified in § 136.9 (Air Tour Management Plans) are proposed.

Regulatory Flexibility Determination and Assessment

The Regulatory Flexibility Act (RFA) of 1980 establishes ''as a principle of regulatory issuance that agencies shall endeavor, consistent with the objective of the rule and of applicable statutes, to fit regulatory and informational requirements to the scale of the business, organization, and government jurisdictions subject to regulation.'' To achieve that principle, the RFA requires agencies to solicit and consider flexible regulatory proposals and to explain the rationale for their actions. The RFA covers a wide range of small entities, including small businesses, not-for-profit organizations and small governmental jurisdictions.

Agencies must perform a review to determine whether a proposed or final rule will have a significant economic impact on a substantial number of small entities. If the determination is that it will, the agency must prepare a regulatory flexibility analysis as described in the RFA.

However, if an agency determines that a proposed or final rule is not expected to have a significant economic impact on a substantial number of small entities, section 605(b) of the RFA provides that the head of the agency

may so certify and a regulatory flexibility analysis is not required. The certification must include a statement providing the factual basis for this determination, and the reasoning should be clear.

The FAA has determined that this final rule by itself imposes no costs on small commercial air tour operators. The actual effect on small entities of implementing this rule will be determined by individual ATMPs. This final rule is limited to only what has been authorized by this Act. Accordingly, pursuant to the Regulatory Flexibility Act, 5 U.S.C. 605(b), the Federal Aviation Administration certifies that this rule will not have a significant impact on a substantial number of small entities. The FAA solicits comments on this determination.

International Trade Impact Assessment

The Trade Agreement Act (TAA) of 1979 prohibits Federal agencies from engaging in any standards or related activities that create unnecessary obstacles to the foreign commerce of the United States. Legitimate domestic objectives, such as safety, are not considered unnecessary obstacles. The TAA also requires consideration of international standards and where appropriate, that they be the basis for U.S. standards.

In accordance with the above Act, the FAA has assessed the potential effect of this final rule and has determined that it will have only a domestic impact and therefore no effect on any trade-sensitive activity.

Unfunded Mandates Reform Act Assessment

The Unfunded Mandates Reform Act of 1995 (UMRA), enacted as Public Law 104–4 on March 22, 1995, is intended, among other things, to curb the practice of imposing unfunded Federal mandates on State, local, and tribal governments.

Title II of the UMRA requires each Federal agency to prepare a written statement assessing the effects of any Federal mandate in a proposed or final agency rule that may result in a $100 million or more expenditure (adjusted annually for inflation) in any one year by State, local, and tribal governments, in the aggregate, or by the private sector; such a mandate is deemed to be a ''significant regulatory action.''

This final rule does not contain such a mandate. Therefore, the requirements of Title II of the Unfunded Mandates Reform Act of 1995 do not apply.

Paperwork Reduction Act

The FAA finds that no paperwork burden is imposed by the adoption of this final rule, which essentially adopts an altitude that completes the definition of commercial air tour operation. The paperwork burden imposed is the product of a Congressional mandate pursuant to the National Park Air Tour Management Act.

The FAA and NPS acknowledge, however, that the Air Tour Management Process will impose paperwork requirements on the public as individual management plans for parks are developed and interim operating authority is approved. This process is delineated in an advisory circular. A request for approval of the paperwork requirements has been submitted to OMB for approval. The description below is provided so that interested individuals may comment on the paperwork submission requirements.

Title: National Parks Air Tour Management.

Summary: Section 40128(a)(2)(A) of the Act requires that ''Before commencing commercial air tour operations over a national park or tribal lands, a commercial air tour operator shall apply to the Administrator for authority to conduct the operations over the park or tribal lands.'' The FAA codified this section as 14 CFR 136.7(b). An advisory circular assists the operator in complying with this application process by listing the requirements:

- Name, mailing address, phone numbers of the company.
- Address of principal base where operations will be conducted.
- Proposed start up date for operations (for new entrants).
- Company certificate number if a certificated operator.
- Management personnel names, titles, phone numbers.
- Part 91 status; Part 135 single pilot, basic, full, or commuter operator status; or Part 121 status.
- Type and number of aircraft to be used in commercial air tour operations.
- National park or tribal lands over which commercial air tour operations will be conducted.
- The safety history of the operator.
- Any additional information that might provide the FAA with a better understanding of the proposed operation (*e.g.*, proposed or actual routes, altitudes, frequency of flights, time of flights, etc.).
- For existing operators, the greater of—

—The number of commercial air tour operations within the 12-month period preceding April 5, 2000, or from April 1, 1999, through March 31, 2000, or

—The average number of commercial air tour operations per 12-month period for the 36 months preceding April 5, 2000, or from April 1, 1997 through March 31, 2000, and

—For seasonal operations, the number of commercial air tour operations that occurred during the season or seasons covered by the 12-month period preceding April 5, 2000, or from April 1, 1999, through March 31, 2000.

- Other appropriate information as may be requested by the Administrator—
- Operators may submit the following optional data to support ATMP development—

—The economic benefits of the operator's commercial air tour operations to the park and community

—Impact of any potential restrictions on an operator's commercial air tour operations

—The advantages of the operator's air tours for its customers and the national parks and/or tribal lands they visit

—The number of air tour visitors the operator serves on an annual or seasonal basis

Except for the optional information, these are routine items that any company would maintain as a matter of business practice, and this information should not require more than an hour to collect. Operators are encouraged to submit the optional information, as it may aid in the ATMP development process. Operators may elect to submit this optional data as a group to reduce duplication of effort.

Use of the information: This information collection supports the final rule, which was mandated by the Act.

Respondents: We estimate that there would be about 174 respondents.

Frequency: This is a one-time collection.

Annual Burden Estimate: The estimate for the collection of routine company data is 1 hour; the collection of the optional information is 2 hours. We estimate that a clerical assistant should be able to produce the application package in 4 hours.

The hourly wage for a chief pilot/company president to produce the information is estimated as equivalent to a GS–14, Step 10, or $101,742 divided by 2080 hours = $49. per hour. Clerical assistance is estimated as equivalent to a GS–6, Step 1, or $28,253 divided by 2080 = $13.58 per hour.

174 operators × 3 hours × $49. = $25,578.

174 clerical assistants × 4 hours × $13.58 = $9, 451.78.

$25,578 + $9,451.78 = $35,029.78 (total cost of 174 operators completing operating authority applications).

The total reporting hour burden is 1218 hours.

The agency is soliciting comments on this information collection to—

(1) Evaluate the accuracy of the agency's estimate of the burden;

(2) Enhance the quality, utility and clarity of the information to be collected; and

(3) Minimize the burden of the collection of information on those who are to respond, including through the use of appropriate automated, electronic, mechanical, or other technological collection techniques or other forms of information technology.

Individuals and organizations may submit comments on the information collection requirements by December 24, 2002 and should direct them to Docket No. FAA–2001–8609, U.S. DOT Dockets, Room PL–401, 400 7th Street, SW., Washington, DC 20590–0001. Comments should also be submitted to the Office of Information and Regulatory Affairs, OMB, New Executive Building, Room 10202, 725 17th Street, NW., Washington, DC 20053, Attention: Desk Officer for FAA.

According to the regulations implementing the Paperwork Reduction Act of 1995 (5 CFR 1320.8(b)(2)(vi)), an agency may not conduct or sponsor, and a person is not required to respond to, a collection of information unless it displays a currently valid OMB control number. The OMB control number for this information collection will be published in the **Federal Register** after the Office of Management and Budget approves it.

List of Subjects

14 CFR Part 91

Afghanistan, Agriculture, Air traffic control, Aircraft, Airmen, Airports, Aviation safety, Canada, Cuba, Ethiopia, Freight, Mexico, Noise control, Political candidates, Reporting and recordkeeping requirements, Yugoslavia.

14 CFR Part 136

Air transportation, Aircraft, Aviation safety, National parks, Recreation and recreation areas, Reporting and recordkeeping requirements.

Adoption of Amendments

For the reasons set forth above, the Federal Aviation Administration amends chapter I of title 14 of the Code of Federal Regulations as follows:

PART 91—GENERAL OPERATING AND FLIGHT RULES

1. The authority citation for part 91 continues to read as follows:

Authority: 49 U.S.C. 106(g), 1155, 40103, 40113, 40120, 44101, 44111, 44701, 44709, 44711, 44712, 44715, 44716, 44717, 44722, 46306, 46315, 46316, 46504, 46506–46507, 47122, 47508, 47528–47531, articles 12 and 29 of the Convention on International Civil Aviation (61 stat. 1180).

2. Special Federal Aviation Regulation No. 78 is removed.

3. 14 CFR part 136 is added to read as follows:

PART 136—NATIONAL PARKS AIR TOUR MANAGEMENT

Sec.

136.1 Applicability.
136.3 Definitions.
136.5 Prohibition of commercial air tour operations over the Rocky Mountain National Park.
136.7 Overflights of national parks and tribal lands.
136.9 Air tour management plans (ATMP).
136.11 Interim operating authority.

Authority: 49 U.S.C. 106(g), 40113, 40119, 44101, 44701, 44701–44702, 44705, 44709–44711, 44713, 44716–44717, 44722, 44901, 44903–44904, 44912, 46105.

§ 136.1 Applicability.

(a) This part restates and paraphrases several sections of the National Parks Air Tour Management Act of 2000, including section 803 (codified at 49 U.S.C. 40128) and sections 806 and 809. This part clarifies the requirements for the development of an air tour management plan for each park in the national park system where commercial air tour operations are flown.

(b) Except as provided in paragraph (c) of this section, this part applies to each commercial air tour operator who conducts a commercial air tour operation over—

(1) A unit of the national park system;

(2) Tribal lands as defined in this part; or

(3) Any area within one-half mile outside the boundary of any unit of the national park system.

(c) This part does not apply to a commercial air tour operator conducting a commercial air tour operation—

(1) Over the Grand Canyon National Park;

(2) Over that portion of tribal lands within or abutting the Grand Canyon National Park;

(3) Over any land or waters located in the State of Alaska; or

(4) While flying over or near the Lake Mead Recreation Area, solely as a transportation route, to conduct a commercial air tour over the Grand Canyon National Park.

§ 136.3 Definitions.

For purposes of this part—

(a) *Commercial air tour operator* means any person who conducts a commercial air tour operation.

(b) *Existing commercial air tour operator* means a commercial air tour operator that was actively engaged in the business of providing commercial air tour operations over a national park at any time during the 12-month period ending on April 5, 2000.

(c) *New entrant commercial air tour operator* means a commercial air tour operator that—

(1) Applies for operating authority as a commercial air tour operator for a national park or tribal lands; and

(2) Has not engaged in the business of providing commercial air tour operations over the national park or tribal lands for the 12-month period preceding enactment.

(d) *Commercial air tour operation*—

(1) Means any flight, conducted for compensation or hire in a powered aircraft where a purpose of the flight is sightseeing over a national park, within ½ mile outside the boundary of any national park, or over tribal lands, during which the aircraft flies—

(i) Below 5,000 feet above ground level (except for the purpose of takeoff or landing, or as necessary for the safe operation of an aircraft as determined under the rules and regulations of the Federal Aviation Administration requiring the pilot-in-command to take action to ensure the safe operation of the aircraft);

(ii) Less than 1 mile laterally from any geographic feature within the park (unless more than ½ mile outside the boundary); or

(iii) Except as provided in § 136.5.

(2) The Administrator may consider the following factors in determining whether a flight is a commercial air tour operation for purposes of this part—

(i) Whether there was a holding out to the public of willingness to conduct a sightseeing flight for compensation or hire;

(ii) Whether a narrative that referred to areas or points of interest on the surface below the route of the flight was provided by the person offering the flight;

(iii) The area of operation;

(iv) The frequency of flights conducted by the person offering the flight;

(v) The route of flight;

(vi) The inclusion of sightseeing flights as part of any travel arrangement package offered by the person offering the flight;

(vii) Whether the flight would have been canceled based on poor visibility of the surface below the route of the flight; and

(viii) Any other factors that the Administrator and Director consider appropriate.

(3) For purposes of § 136.5, means any flight conducted for compensation or hire in a powered aircraft where a purpose of the flight is sightseeing over a national park.

(e) *National park* means any unit of the national park system. (See title 16 of the U.S. Code, section 1, *et seq.*)

(f) *Tribal lands* means that portion of Indian country (as that term is defined in section 1151 of title 18 of the U.S. Code) that is within or abutting a national park.

(g) *Administrator* means the Administrator of the Federal Aviation Administration.

(h) *Director* means the Director of the National Park Service.

(i) *Superintendent* means the duly appointed representative of the National Park Service for a particular unit of the national park system.

§ 136.5 Prohibition of commercial air tour operations over the Rocky Mountain National Park.

All commercial air tour operations in the airspace over the Rocky Mountain National Park are prohibited regardless of altitude.

§ 136.7 Overflights of national parks and tribal lands.

(a) *General.* A commercial air tour operator may not conduct commercial air tour operations over a national park or tribal land except—

(1) In accordance with this section;

(2) In accordance with conditions and limitations prescribed for that operator by the Administrator; and

(3) In accordance with any applicable air tour management plan for the park or tribal lands.

(b) *Application for operating authority.* Before commencing commercial air tour operations over a national park or tribal lands, a commercial air tour operator shall apply to the Administrator for authority to conduct the operations over the park or tribal lands.

(c) *Number of operations authorized.* In determining the number of authorizations to issue to provide commercial air tour operations over a national park, the Administrator, in cooperation with the Director, shall take into consideration the provisions of the air tour management plan, the number of existing commercial air tour operators and current level of service and equipment provided by any such operators, and the financial viability of each commercial air tour operation.

(d) *Cooperation with National Park Service.* Before granting an application under this part, the Administrator, in cooperation with the Director, shall develop an air tour management plan in accordance with § 136.9 and implement such a plan.

(e) *Time limit on response to applications.* Every effort will be made to act on any application under this part and issue a decision on the application not later than 24 months after it is received or amended.

(f) *Priority.* In acting on applications under this paragraph to provide commercial air tour operations over a national park, the Administrator shall give priority to an application under this paragraph in any case where a new entrant commercial air tour operator is seeking operating authority with respect to that national park.

(g) *Exception.* Notwithstanding this section, commercial air tour operators may conduct commercial air tour operations over a national park under part 91 of this chapter if—

(1) Such activity is permitted under part 119 of this chapter;

(2) The operator secures a letter of agreement from the Administrator and the Superintendent for that park describing the conditions under which the operations will be conducted; and

(3) The number of operations under this exception is limited to not more than a total of 5 flights by all operators in any 30-day period over a particular park.

(h) *Special rule for safety requirement.* Notwithstanding § 136.11, an existing commercial air tour operator shall apply, not later than January 23, 2003 for operating authority under part 119 of this chapter, for certification under part 121 or part 135 of this chapter. A new entrant commercial air tour operator shall apply for such authority before conducting commercial air tour operations over a national park or tribal lands that are within or abut a national park. The Administrator shall make every effort to act on such application for a new entrant and issue a decision on the application not later than 24 months after it is received or amended.

§ 136.9 Air tour management plans (ATMP).

(a) *Establishment.* The Administrator, in cooperation with the Director, shall establish an air tour management plan for any national park or tribal land for which such a plan is not in effect whenever a person applies for authority to conduct a commercial air tour operation over the park. The air tour management plan shall be developed by means of a public process in accordance with paragraph (d) of this section. The objective of any air tour management plan is to develop acceptable and effective measures to mitigate or prevent the significant adverse impacts, if any, of commercial air tour operations upon the natural and cultural resources, visitor experiences, and tribal lands.

(b) *Environmental determination.* In establishing an air tour management plan under this section, the Administrator and the Director shall each sign the environmental decision document required by section 102 of the National Environmental Policy Act of 1969 (42 U.S.C. 4332) which may include a finding of no significant impact, an environmental assessment, or an environmental impact statement and the record of decision for the air tour management plan.

(c) *Contents.* An air tour management plan for a park—

(1) May prohibit commercial air tour operations in whole or in part;

(2) May establish conditions for the conduct of commercial air tour operations, including, but not limited to, commercial air tour routes, maximum number of flights per unit of time, maximum and minimum altitudes, time of day restrictions, restrictions for particular events, intrusions on privacy on tribal lands, and mitigation of noise, visual, or other impacts;

(3) Shall apply to all commercial air tour operations within ½ mile outside the boundary of a national park;

(4) Shall include incentives (such as preferred commercial air tour routes and altitudes, and relief from caps and curfews) for the adoption of quiet technology aircraft by commercial air tour operators conducting commercial air tour operations at the park;

(5) Shall provide for the initial allocation of opportunities to conduct commercial air tour operations if the plan includes a limitation on the number of commercial air tour operations for any time period; and

(6) Shall justify and document the need for measures taken pursuant to paragraphs (c)(1) through (c)(5) of this section and include such justification in the record of decision.

(d) *Procedure.* In establishing an ATMP for a national park or tribal lands, the Administrator and Director shall—

(1) Hold at least one public meeting with interested parties to develop the air tour management plan;

(2) Publish the proposed plan in the **Federal Register** for notice and

comment and make copies of the proposed plan available to the public;

(3) Comply with the regulations set forth in 40 CFR 1501.3 and 1501.5 through 1501.8 (for the purposes of complying with 40 CFR 1501.3 and 1501.5 through 1501.8, the Federal Aviation Administration is the lead agency and the National Park Service is a cooperating agency); and

(4) Solicit the participation of any Indian tribe whose tribal lands are, or may be, overflown by aircraft involved in a commercial air tour operation over the park or tribal lands to which the plan applies, as a cooperating agency under the regulations referred to in paragraph (d)(3) of this section.

(e) *Amendments.* The Administrator, in cooperation with the Director, may make amendments to an air tour management plan. Any such amendments will be published in the **Federal Register** for notice and comment. A request for amendment of an ATMP will be made in accordance with § 11.25 of this chapter as a petition for rulemaking.

§ 136.11 Interim operating authority.

(a) *General.* Upon application for operating authority, the Administrator shall grant interim operating authority under this section to a commercial air tour operator for commercial air tour operations over a national park or tribal land for which the operator is an existing commercial air tour operator.

(b) *Requirements and limitations.* Interim operating authority granted under this section—

(1) Shall provide annual authorization only for the greater of—

(i) The number of flights used by the operator to provide the commercial air tour operations within the 12-month period prior to April 5, 2000; or

(ii) The average number of flights per 12-month period used by the operator to provide such operations within the 36-month period prior to April 5, 2000, and for seasonal operations, the number of flights so used during the season or seasons covered by that 12-month period;

(2) May not provide for an increase in the number of commercial air tour operations conducted during any time period by the commercial air tour operator above the number the air tour operator was originally granted unless such an increase is agreed to by the Administrator and the Director;

(3) Shall be published in the **Federal Register** to provide notice and opportunity for comment;

(4) May be revoked by the Administrator for cause;

(5) Shall terminate 180 days after the date on which an air tour management plan is established for the park and tribal lands;

(6) Shall promote protection of national park resources, visitor experiences, and tribal lands;

(7) Shall promote safe commercial air tour operations;

(8) Shall promote the adoption of quiet technology, as appropriate, and

(9) Shall allow for modifications of the interim operating authority based on experience if the modification improves protection of national park resources and values and of tribal lands.

(c) *New entrant operators.* The Administrator, in cooperation with the Director, may grant interim operating authority under this paragraph (c) to an air tour operator for a national park or tribal lands for which that operator is a new entrant air tour operator if the Administrator determines the authority is necessary to ensure competition in the provision of commercial air tour operations over the park or tribal lands.

(1) *Limitation.* The Administrator may not grant interim operating authority under this paragraph (c) if the Administrator determines that it would create a safety problem at the park or on the tribal lands, or if the Director determines that it would create a noise problem at the park or on the tribal lands.

(2) *ATMP limitation.* The Administrator may grant interim operating authority under this paragraph (c) only if the ATMP for the park or tribal lands to which the application relates has not been developed within 24 months after April 5, 2000.

Issued in Washington, DC on October 17, 2002.

Marion C. Blakey,

Administrator.

[FR Doc. 02–27033 Filed 10–24–02; 8:45 am]

BILLING CODE 4910–13–P

Federal Register

Friday,
October 25, 2002

Part IV

Department of Health and Human Services

Centers for Medicare & Medicaid Services

42 CFR Parts 409, 417, and 422
Medicare Program; Modifications to Managed Care Rules; Proposed Rule

DEPARTMENT OF HEALTH AND HUMAN SERVICES

Centers for Medicare & Medicaid Services

42 CFR Parts 409, 417, and 422

[CMS–4041–P]

RIN 0938–AK71

Medicare Program; Modifications to Managed Care Rules

AGENCY: Centers for Medicare & Medicaid Services (CMS), HHS.

ACTION: Proposed rule.

SUMMARY: This proposed rule would implement certain provisions of the Social Security Act (the Act) relating to the Medicare+Choice (M+C) program that were enacted in the Medicare, Medicaid, and SCHIP Benefits Improvement and Protection Act of 2000 (BIPA).

It also proposes other changes to the M+C regulations based on program experience and feedback from M+C organizations.

DATES: We will consider comments if we receive them at the appropriate address, as provided below, no later than 5 p.m. on December 24, 2002.

ADDRESSES: In commenting, please refer to file code CMS–4041–P. Because of staff and resource limitations, we cannot accept comments by facsimile (FAX) transmission. Mail written comments (one original and three copies) to the following address ONLY: Centers for Medicare & Medicaid Services, Department of Health and Human Services, Attention: CMS–4041–P, P.O. Box 8013, Baltimore, MD 21244–8013.

Please allow sufficient time for mailed comments to be timely received in the event of delivery delays.

If you prefer, you may deliver (by hand or courier) your written comments (one original and three copies) to one of the following addresses: Hubert H. Humphrey Building, 200 Independence Avenue, SW., Room 445–G, Washington, DC 20201 or Centers for Medicare & Medicaid Services, Room C5–14–03, 7500 Security Boulevard, Baltimore, MD 21244–1850.

(Because access to the interior of the Hubert H. Humphrey Building is not readily available to persons without Federal Government identification, commenters are encouraged to leave their comments in the CMS drop slots located in the main lobby of the building. A stamp-in clock is available for persons wishing to retain proof of filing by stamping and retaining an extra copy of the comments being filed.)

Comments mailed to the addresses indicated as appropriate for hand or courier delivery may be delayed and could be considered late.

For information on viewing public comments, see the beginning of the **SUPPLEMENTARY INFORMATION** section.

FOR FURTHER INFORMATION CONTACT: Tom Hutchinson, (410) 786–8953.

SUPPLEMENTARY INFORMATION: *Inspection of Public Comments:* Comments received timely will be available for public inspection as they are received, generally beginning approximately 3 weeks after publication of a document, at the headquarters of the Centers for Medicare & Medicaid Services, 7500 Security Boulevard, Baltimore, Maryland 21244, Monday through Friday of each week from 8:30 a.m. to 4 p.m. To schedule an appointment to view public comments, phone (410) 786–7197.

I. Background

A. Balanced Budget Act of 1997

Section 4001 of the Balanced Budget Act of 1997 (BBA) (Pub. L. 105–33), added sections 1851 through 1859 to the Social Security Act (the Act) establishing a new Part C of the Medicare program, known as the Medicare+Choice (M+C) program. Under section 1851(a)(1) of the Act, every individual entitled to Medicare Part A and enrolled under Part B, except for individuals with end-stage renal disease, could elect to receive benefits either through the Medicare fee-for-service program or an M+C plan, if one was offered where he or she lived.

The primary goal of the M+C program was to provide Medicare beneficiaries with a wider range of health plan choices through which to obtain their Medicare benefits. The BBA authorized a variety of private health plan options for beneficiaries, including both the traditional managed care plans (such as those offered by health maintenance organizations (HMOs)) that had been offered under section 1876 of the Act, and new options that were not previously authorized. Three types of M+C plans were authorized under the new Part C, as follows:

- M+C coordinated care plans, including HMO plans (with or without point-of-service options), provider-sponsored organization (PSO) plans, and preferred provider organization (PPO) plans.
- M+C medical savings account (MSA) plans (combinations of a high-deductible M+C health insurance plan and a contribution to an M+C MSA).
- M+C private fee-for-service plans.

B. Medicare, Medicaid, and SCHIP Balanced Budget Refinement Act of 1999

The Medicare, Medicaid, and SCHIP Balanced Budget Refinement Act of 1999 (BBRA) (Pub. L. 106–113) amended the M+C provisions of the Act. Many of these amendments were reflected in a final rule with comment period published in the **Federal Register** on June 29, 2000 (65 FR 40170). We received five comments in response to that final rule, which will be addressed in the final rule responding to comments concerning this proposed rule.

Certain amendments to the new Part C made by the BBRA are relevant to the Medicare, Medicaid, and SCHIP Benefits Improvement and Protection Act of 2000 (BIPA), since the BIPA made changes to the BBRA amendments. For example, section 502 of the BBRA amended section 1851(f)(2) of the Act by providing that if an election or change in election to an M+C plan was made after the 10th day of a calendar month, the election would be effective the first day of the second calendar month following the date the election or change in election was made, not the first calendar month, as had been the case under the original M+C statute. As discussed in a final rule published on March 22, 2002 (67 FR 13278), the BIPA reversed this amendment and restored the original effective date.

Section 511(a) of the BBRA amended section 1853(a) of the Act by providing for a risk adjustment transition schedule for calendar years (CY) 2000 and 2001 that differed from the one that we had provided as part of our risk adjustment methodology. The BIPA further revised this transition schedule.

Section 512 of the BBRA amended section 1853 of the Act by adding a new paragraph (i) to provide for new entry bonus payments to encourage M+C organizations to offer plans where there were no M+C plans serving the area as of January 1, 2000. This BBRA provision was amended by the BIPA to permit M+C organizations entering counties that had been abandoned in 2001 to receive bonuses.

The final rule published on March 22, 2002 revised the regulations to reflect the changes to the BBRA provided in sections 502, 511, and 512 of the BIPA

C. Medicare, Medicaid, and SCHIP Benefits Improvement and Protection Act of 2000

The Medicare, Medicaid, and SCHIP Benefits Improvement and Protection Act of 2000 (BIPA), enacted December

21, 2000, further amended the M+C provisions of the Act. The final rule published on March 22, 2002 amended the regulations to reflect changes made by certain provisions of the BIPA, including those discussed in section I.B of this preamble, that amended provisions enacted in the BBRA. In this proposed rule, we propose to revise the regulations to implement sections 605, 606, 611, 612, 615, 617, 620, 621, and 623 of the BIPA.

1. Revision of Payment Rates for End-Stage Renal Disease (ESRD) Patients Enrolled in Medicare+Choice Plans

Section 605(a) of the BIPA amended section 1853(a)(1)(B) of the Act by requiring us to provide for appropriate adjustments to the M+C ESRD payment rates, effective January 1, 2002, to reflect the demonstration rate (including the risk adjustment methodology associated with the demonstration rate) of the social health maintenance organization ESRD capitation demonstration. This demonstration assessed whether it would be feasible to allow Medicare ESRD patients of all ages to enroll in M+C plans and to test risk-adjusted capitation payments for ESRD beneficiaries.

Before January 1, 2002, M+C ESRD capitation payments were based on State level base rates that were not risk-adjusted. The base payment rates were based on a base year (1997) amount that represented 95 percent of projected State average fee-for-service costs, as determined at the time.

Under section 605(c) of the BIPA, we were required to publish for public comment a description of the adjustments we proposed to make in accordance with section 605(a) of the BIPA. We published a proposed notice on May 1, 2001 (66 FR 21770) soliciting comments on the proposed adjustments. Section 605(c) of the BIPA further required us to publish these adjustments in final form so that the amendment made by section 605(a) would be implemented consistent with 605(b) (which provided that the adjustments were to become effective with payments made for January 2002. We published this final notice in the **Federal Register** on October 1, 2001 (66 FR 49958).

The new ESRD payment methodology set forth in the final notice published on October 1, 2001—

- Increased the ESRD base payment rate for 2002 by 3 percent. We determined in the final notice that a 3 percent increase in the base rate was the most appropriate proxy for 100 percent of the estimated per capita fee-for-service expenditures for ESRD beneficiaries, and the most appropriate way to reflect the demonstration rates; and
- Adjusted State per capita rates by age and sex factors, in order to reflect differences in costs among ESRD patients.

These adjustment factors and rates for CY 2002 for enrollees with ESRD can be found on our Web site at *http:www.cms.gov/stats/hmorates/aapccpg.htm#2002rates.*

For the purpose of M+C payment, ESRD beneficiaries include all beneficiaries with ESRD, whether entitled to Medicare because of ESRD, disability, or age. Under the new M+C ESRD payment methodology published on October 1, 2001, rates would continue to include the costs of beneficiaries with Medicare as Secondary Payer (MSP) status. (Costs to Medicare of M+C ESRD enrollees with MSP status do not include payments made by other primary payers such as employer group health plans or other insurers.)

We propose to revise § 422.250(a)(2)(i) to reflect these changes to the payment methodology for ESRD enrollees set forth in the October 1, 2001 final notice.

2. Permitting Premium Reductions as Additional Benefits Under Medicare+Choice Plans

Section 606 of the BIPA amended section 1854(f)(1) of the Act by allowing M+C organizations to reduce the standard Part B premiums for their M+C Medicare enrollees, as an additional benefit, if the M+C organization experiences an adjusted excess amount, as defined in § 422.312(a)(2), for that plan in a contract year, beginning in CY 2003. Under section 606 of the BIPA, M+C organizations could now elect to accept lower payments from us and apply 80 percent of the reduction to reduce the standard Part B premiums of M+C beneficiaries enrolled in that plan. The amount of the reduction in payments to the M+C organizations may not exceed 125 percent of the Medicare standard Part B premium rate set by us for that year, which is the amount that would result in eliminating the enrollee's liability for the Part B premium entirely. The reduction must be applied uniformly to all similarly situated enrollees of the M+C plan.

In addition, section 606 of the BIPA required that the list of information made available to each enrollee electing an M+C plan must also include a description of any reduction in the Part B premiums.

We would revise §§ 422.2, 422.111(f), 422.250(a)(1), and 422.312 to reflect these changes.

3. Payment of Additional Amounts for New Benefits Covered During a Contract Term

Section 611 of the BIPA amended section 1853(c)(7) of the Act by limiting the financial impact on M+C organizations of new coverage requirements adopted by the Congress. If we project that these new coverage requirements would result in a significant increase in costs to M+C organizations, M+C organizations would not be required to cover them under their contracts, but the services would be instead paid for on a fee-for-service basis through our fiscal intermediaries or carriers, until the next annual M+C payment announcement is made following the coverage change. After that, appropriate adjustments would be made to the payments made to M+C organizations to reflect the additional costs. Before the payment rate adjustments become effective, the change in benefits would not be part of the M+C organizations' contracts with us and would not be covered under the M+C plans. After the payment adjustments become effective, the change in benefits would become part of the M+C organizations' contracts with us and would be covered by the M+C plans.

We would revise §§ 422.109 and 422.256(b) accordingly.

4. Restriction on Implementation of Significant New Regulatory Requirements Midyear

Section 612 of the BIPA amended section 1856(b) of the Act to prohibit us from imposing significant new regulatory requirements on an M+C organization or plan, other than at the beginning of a calendar year. We propose in a new § 422.521 to define significant regulatory requirements as those which impose a new cost or burden on M+C organizations, and for which a mid-year effective date is not required by statute.

5. Election of Uniform Local Coverage Policy for a Medicare+Choice Plan Covering Multiple Localities

Section 615 of the BIPA amended section 1852(a)(2) of the Act by adding a section that would allow M+C organizations to achieve greater consistency of benefits for M+C plans covering multiple localities. In providing Medicare covered benefits to its enrollees, each M+C organization ordinarily must comply with, among other things, written coverage decisions of local carriers and intermediaries with jurisdiction for claims in the geographic area in which the services are covered

under the M+C plan. Some M+C organizations have plans that cover a large area, either a State or multiple counties in a State. Section 615 of the BIPA would allow those M+C organizations that offer a plan in an area large enough that more than one local coverage policy is applied in the service area, to elect to have the local coverage policy for that part of the area that is the most beneficial to the M+C enrollees apply to all M+C enrollees in the plan. The Secretary will make the final determination as to which local coverage policy is most beneficial to the M+C enrollees.

By electing to use this uniform coverage policy, M+C organizations could use economies of scale when printing and distributing marketing materials and descriptions of benefits for their M+C plans. This policy would also enable the M+C organizations to standardize coverage decisions and provider contracts across entire plans, rather than having different policies apply to different geographic areas of the same plan.

We propose to revise § 422.101(b)(3) to reflect the new option allowed by section 615 of the BIPA.

6. Medicare+Choice Program Compatibility With Employer or Union Group Health Plans

Section 617 of the BIPA amended section 1857 of the Act by allowing us to waive or modify requirements that hinder the design of, the offering of, or the enrollment in M+C plans under contracts between M+C organizations and employers, labor organizations, or the trustees of a fund established to furnish benefits to an entity's employees. Previously, M+C organizations that contracted with an employer group or with a State Medicaid agency to provide benefits had to comply with all requirements of the regulations found at part 422.

The authority in section 617 of the BIPA was first available for calendar year 2001. We accordingly informed M+C organizations that, in order to facilitate the offering of M+C plans under contracts with employers, labor organizations, or the trustees of a benefits trust fund, under this proposed rule we would, upon written request from an M+C organization, waive or modify those requirements in part 422 of the regulations that would hinder the design of, the offering of, or the enrollment in an M+C plan. We indicated that after we have approved a request for a waiver, the requesting M+C plan, and any other M+C organization, would be able to use the waiver in developing its Adjusted Community Rate Proposal (ACRP). Any M+C plan using the waiver must include that information in the cover letter of its ACRP submission to us. The waiver or modification would take effect once the ACRP has been approved.

We informed M+C organizations that, at least initially, we would approve the following three types of waivers under the authority in section 617 of the BIPA:

- Employer-Only Plans: We would allow M+C organizations to offer employer-only plans (M+C plans not available to the individual market). M+C organizations would not be required to market these plans to individuals. In addition, M+C organizations would not be required to have the marketing materials for employer-only plans reviewed and approved by us.
- Actuarial Swaps: We would allow M+C organizations to swap benefits not covered by Medicare of approximately equal value when an employer asks for a benefit package that differs from the package offered by the M+C organization to the individual market.
- Actuarial Equivalence: We would allow M+C organizations to raise the co-payments for certain benefits but provide a higher benefit level or a modification to the premium charged, as long as projected beneficiary liability was actuarially equivalent.

We also indicated that we would continue to review additional areas for waiver or modification and would issue further guidance once we have completed our review. We solicit comments on these categories, and whether we should provide for additional categories.

We propose to amend § 422.106 by adding a new paragraph (c) to reflect the authority in section 617 of the BIPA.

7. Permitting End-Stage Renal Disease Beneficiaries To Enroll in Another Medicare+Choice Plan if the Plan in Which They Are Enrolled Is Terminated

Section 620 of the BIPA amended section 1851(a)(3)(B) of the Act to permit beneficiaries with end-stage renal disease (ESRD) to enroll in another M+C plan if the plan in which they are enrolled terminates its contract with us or discontinues the plan in the area in which the beneficiary lives. Before the BIPA, beneficiaries with ESRD who were affected by an M+C plan termination had no Medicare options other than another plan offered by the same M+C organization or the original Medicare fee-for-service program.

Section 620 of the BIPA allows ESRD beneficiaries to elect to enroll in another M+C plan if their plan terminates its contract with us or discontinues the plan in their area. However, this provision only authorizes the beneficiaries to make one election based on that termination. If the new M+C plan in which the ESRD beneficiary enrolls pursuant to section 620 of the BIPA terminates, the ESRD beneficiary may enroll in another M+C plan. This is true for any subsequent M+C plan terminations or discontinuations that result in the beneficiary's disenrollment. However, if the ESRD beneficiary enrolls in another M+C plan after his or her plan terminates its contract or discontinues the plan in the area in which he or she lives, then disenrolls from the new plan for a reason other than that the plan is terminating or discontinuing the plan in his or her area, he or she may not enroll in another new M+C plan unless the new plan is offered by the same M+C organization offering the M+C plan in which he or she was enrolled. If there is no plan meeting this criterion available, the beneficiary must instead return to the original Medicare fee-for-service program.

While this provision refers to ESRD beneficiaries electing to continue enrollment in another M+C plan, we do not interpret this to mean that the enrollee must make the election immediately upon the termination of the M+C plan in which he or she is enrolled. This is because, under section 620(b)(2) of the BIPA, an individual whose plan was terminated or discontinued any time after December 31, 1998 is eligible for enrollment under this provision, and is to be treated as if the plan terminated as of the date of enactment of the BIPA. Since the BIPA was enacted in the middle of a month, and a beneficiary could not be expected to be informed of its provisions in time to enroll effective the first of the next month, we believe that the Congress contemplated that the opportunity to enroll in another plan provided in section 620 of the BIPA does not necessarily have to be exercised immediately upon termination of an M+C plan. In other words, we do not interpret ''continue enrollment'' necessarily to mean ''continue without interruption''.

We propose to revise § 422.50(a)(2) to reflect the provisions in section 620 of the BIPA.

8. Providing Choice for Skilled Nursing Facility Services Under the Medicare+Choice Program

Section 621 of the BIPA amended section 1852 of the Act by adding a new subsection (l). This new subsection would ensure that an M+C organization would give a Medicare beneficiary who is a resident of a skilled nursing facility

(SNF) the option of returning to his or her ''home SNF'' for posthospital extended care services upon discharge from a hospital.

The term ''home skilled nursing facility'' would mean—

- The SNF in which the beneficiary resided at the time of admission to the hospital;
- A SNF providing posthospital extended care services through a continuing care retirement community that provided residence to the beneficiary at the time of admission to the hospital; or
- The SNF in which the spouse of the beneficiary is residing at the time of discharge from the hospital.

In order for a home SNF to be offered under this section, the SNF to which the beneficiary would be returned must either have a contract with the M+C organization to provide posthospital services or agree to accept substantially similar payment under the same terms and conditions that apply to SNFs under contract with the M+C organization. The coverage provided must be no less favorable to the beneficiary than coverage of posthospital services that are otherwise covered under the M+C plan.

The requirement to return the beneficiary to his or her home SNF would not apply if the applicable SNF is not qualified to provide benefits under Medicare Part A to beneficiaries not enrolled in an M+C plan. A SNF that is not contractually bound to do so could refuse to accept an M+C beneficiary or impose conditions on the acceptance of the beneficiary for posthospital extended care services.

The requirements of this new subsection first became applicable under contracts entered into or renewed on or after December 20, 2000.

This proposed rule would add a new § 422.133 to reflect the requirements of section 621 of the BIPA.

In addition to the requirements concerning returning beneficiaries to their home SNFs, this section also required that the Medicare Payment Advisory Commission (MEDPAC) conduct a study to analyze the effects of the new requirements. The study must examine the effects of the new requirements on the following:

- The scope of additional benefits provided under the M+C program.
- The administrative and other costs incurred by M+C organizations.
- The contractual relationships between M+C organizations and SNFs.

MEDPAC must submit a report on this study to the Congress no later than December 20, 2002.

9. Increased Civil Money Penalty for Medicare+Choice Organizations That Terminate Contracts Mid-Year

Section 1857(g)(3) of the Act, authorizes us to impose intermediate sanctions, including civil money penalties, on M+C organizations for the same reasons that we can terminate an M+C organization's contract. Section 1857(c)(2) of the Act provides that we may, at any time, terminate an M+C organization's contract if we determine that the M+C organization—

- Failed substantially to carry out the contract;
- Is carrying out the contract in a manner inconsistent with the efficient and effective administration of the M+C program; or
- No longer substantially meets the applicable conditions of the M+C program.

In §§ 422.510(a)(1) through (a)(12), we identified specific M+C organization behaviors that we have determined meet one of the grounds for termination described in section 1857(c)(2) of the Act. Further, in §§ 422.752(b) and 422.756(f)(3), we described the basis and procedures for imposing the intermediate sanctions that originate from M+C contract violations that are grounds for M+C contract termination by us.

Section 623 of the BIPA amended section 1857(g)(3) of the Act by providing us with enhanced civil money penalty authority, which we would implement in proposed § 422.758. Under section 623 of the BIPA, the Congress gave us the authority to establish and levy separate and distinct civil money penalties when our determination that an M+C organization has failed to substantially carry out the terms of its contract is based upon the M+C organization's termination of its contract with us in a manner other than that provided for in the M+C contract and in § 422.512. The new civil money penalty would apply to terminations occurring after December 21, 2000. The amount of this civil money penalty may not exceed $100,000, unless we establish a higher amount through further regulations.

We believe that the Congress extended the flexibility to establish a potentially higher civil money penalty in recognition of the fact that the $100,000 specified in the Act may, in some instances, not provide an effective deterrent to discourage M+C organizations from terminating their contracts in a manner inconsistent with the procedures described in the regulations. In developing this civil money penalty amount, it is appropriate for us to consider the number of Medicare beneficiaries who could be adversely affected by an M+C organization's decision to terminate its contract with us in a manner that violates M+C rules.

We propose to establish the amount of this civil money penalty as either $250 per Medicare member enrolled in the terminated M+C plan or plans at the time the M+C organization terminated its contract with us or $100,000, whichever is greater. We have added the ''whichever is greater'' provision to discourage violations of the contract termination provisions by M+C organizations with lower M+C plan enrollment. In either instance, this new civil money penalty would represent a substantial increase over the current civil money penalty of $25,000 for similar violations and would serve as an effective deterrent against M+C contract terminations violations that could potentially harm Medicare beneficiaries.

This provision of the BIPA would create a separate category of civil money penalty, with a dollar amount unique to the violation, that we can impose on M+C organizations that fail to substantially carry out the terms of their contracts with us by violating the contract termination provisions described in § 422.512. Accordingly, we would revise § 422.758 and add a new paragraph (b) that describes this civil money penalty.

D. Skilled Nursing Facility Care Under Medicare+Choice

Under section 1814(a)(2)(B) of the Act, the Medicare extended care skilled nursing facility (SNF) benefit covers skilled nursing care or other skilled rehabilitation services that are needed on a daily basis and only available in a SNF on an inpatient basis.

Generally, this benefit is only covered following a hospital stay of not less than 3 days. Under section 1812(f) of the Act, however, we may authorize coverage of SNF care without a prior hospital stay if two conditions are met. First, the coverage of these services must not result in any increase in Medicare program payments, and second, the coverage must not alter the acute care nature of the benefit.

We have determined that these conditions are met in the case of SNF services furnished by an M+C organization that covers SNF services. We are proposing to revise the regulations to reflect this determination, so that a SNF stay without a prior 3-day hospital stay can be covered by Medicare if the admission to the SNF occurred while the beneficiary was

enrolled in a M+C plan that covers SNF services.

Under section 1852(a) of the Act, organizations contracting with us under the M+C program must provide to their Medicare enrollees at least those items and services for which benefits are available under the original Medicare fee-for-service program. These M+C organizations may also furnish additional coverage, including cost-sharing for Medicare benefits and benefits not covered under the original Medicare fee-for-service program. One additional benefit that many M+C organizations have chosen to furnish is care in a SNF that does not follow a 3-day hospital stay.

Because these SNF services were not Medicare covered services, the cost of the services were included either as an additional benefit funded out of the adjusted excess calculated in the Adjusted Community Rate (ACR), or as a supplemental benefit for which a premium was charged. An enrollee receiving SNF services under these circumstances would remain entitled to the SNF Medicare benefit, which required a prior 3-day hospital stay. Moreover, an enrollee in a SNF for services covered as an additional or supplemental benefit without a prior 3-day hospital stay would no longer have the SNF services covered if he or she disenrolled from the M+C plan (or the plan terminated) in the middle of the SNF stay. By exercising our authority under section 1812(f) and allowing Medicare coverage of SNF services without the prior 3-day hospital stay by an M+C organization that covered them as an additional or supplemental benefit, the entire SNF stay would then be considered a Medicare covered benefit.

Our determination that SNF services furnished by M+C organizations meet the two tests in section 1812(f) is based on the fact that M+C organizations are paid a monthly per-Medicare enrollee payment to provide all contracted services. Thus, Medicare costs would not be affected by permitting SNF services to be covered by Medicare without the prior 3-day hospital stay. The savings from the 3-day hospital stay would be applied to the SNF care for those same 3 days. This would also provide incentives for the M+C organizations to provide care more cost effectively. Some evidence indicates that M+C organizations, particularly coordinated care plans, can shorten hospital stays and shift patients to post acute or subacute settings, such as SNFs, more quickly than under the original Medicare program. If SNF care is the appropriate level of care, M+C organizations may use SNF care rather than more expensive hospital care for similar patients requiring post hospital care. For some patients and diagnoses, the M+C organization may bypass the hospital stay and admit the beneficiary directly to a SNF.

We make a capitation payment for each enrollee using a formula set in section 1853 of the Act. Allowing an M+C organization to provide a SNF benefit that does not require a 3-day hospital stay as part of its basic Medicare benefit package would not affect any payments to M+C organizations. Since we are already paying for the transition from M+C organizations to the original Medicare program during a SNF stay, there would be no additional program costs. If those M+C enrollees had been in the original Medicare program, they would have had a 3-day hospital stay. M+C organizations that take advantage of this new benefit would furnish it the same way it has been used in the past, to shift care to the SNF setting that otherwise would have occurred in the hospital when the beneficiary's physician determines that a SNF stay would meet the level of care requirement.

We would add a § 409.20(c)(4), revise §§ 409.30(b) and 409.31(b), and add a new § 422.101(c) to reflect these changes.

E. Disenrollment by the M+C Organization

The interim final rule published in the **Federal Register** on June 26, 1998 (63 FR 35067) provided that an M+C plan enrollee who remained out of the M+C plan's the service area for more than 12 months was considered to have moved out of the service area, and must be disenrolled by the M+C organization offering the plan. There were several comments in response to this interim final rule concerning this issue. Commenters were concerned about beneficiaries being out of the service area of a plan, but still enrolled in the plan, in which case they could only receive urgent and emergent care. They believed that an enrollee who was out of the service area for more than 6 months should join another M+C plan that could provide all healthcare benefits, not just urgent and emergent care. As a result of these comments, in the final rule with comment period published in the **Federal Register** on June 29, 2000 (65 FR 40270, we shortened the time in which an enrollee could be out of the service area and still remain enrolled in the M+C plan from 12 months to 6 months.

However, this change had the consequence of limiting the ''visitor'' or ''traveler'' type programs that many M+C plans have for their enrollees who leave the service area for extended periods of time, exceeding 6 months. These programs allow enrollees to remain enrolled in the M+C plan and to receive more than just urgent and emergent care when out of the service area. For example, enrollees may temporarily stay with a relative while recuperating from an illness, or may temporarily travel to a more temperate climate during colder weather, or may just travel for an extended period of time. The M+C organizations have expressed concerns about the impact of the current 6-month rule on these programs. In response to these concerns, we propose to create an exception to the 6-month rule that would allow the plans to continue to offer these programs that extend the out-of-service-area benefits from 6 to 12 months. The M+C organizations offering these programs would be allowed to impose restrictions on obtaining benefits, except for urgent, emergent, and post stabilization care, and renal dialysis. Enrollees in these programs would not be disenrolled if they are out of the service area for up to 12 months, but enrollees in M+C plans without this program would continue to be disenrolled if they are out of the service area for 6 months or more. We propose to revise § 422.74(d)(4) to reflect this change.

F. Reporting Requirements for Physician Incentive Plans

Section 1852(j)(4)(B)(iii) of the Act required M+C organizations to provide us with descriptive information regarding their physician incentive plans (PIP) sufficient to permit us to determine whether the plan is in compliance with the applicable requirements. The current regulations interpreted this provision to require that an M+C organization submit the CMS PIP Disclosure Form (OMB No. 0938–0700) to us with its contract application and annually thereafter. In this proposed rule, we would change the reporting requirement to allow M+C organizations to maintain the required PIP information in their files (or their subcontractors' files) and submit it to us upon request (such as during a site visit). Furthermore, we propose to delete the specific requirements concerning the type of information that would have to be maintained.

We would retain all other requirements pertaining to physician incentive plans, such as the stop-loss provisions and the requirement that M+C organizations provide information to beneficiaries upon request. This change would also apply to HMOs

contracting with us who are also required to submit the same information concerning their physician incentive plans.

When the physician incentive plan requirements were enacted, the Congress expressed concern that financial incentives could lead to physicians hesitating to provide needed referral services. Because this proposed rule would modify the reporting requirements, there may be concern that this could lead to a reduction in the quality of care provided to beneficiaries. However, we have taken a number of steps to improve the quality of care provided by M+C organizations, such as the collection of Health Plan Employer Data Information Sets (HEDIS) and the Consumer Assessment of Health Plans Survey (CAHPS), and we have implemented a number of other quality improvement projects. These improved quality assessments provide direct measures of quality and access that we believe make it less necessary to receive annual reports on PIP arrangements. In addition, this proposed approach would be consistent with the reporting requirements of private accrediting organizations, such as the National Committee for Quality Assurance (NCQA), which only reviews incentive plans when investigating quality problems.

We propose to revise §§ 417.479(h)(2) and 422.210(a) to reflect these changes.

G. M+C Appeals Process

1. Defining Who Can Request Organization Determinations

Currently, the M+C regulations at § 422.566(c) specify that any of the parties listed in § 422.574 can request an M+C organization determination. It has come to our attention that in some cases the use of this cross-reference has been misconstrued to mean that in order to request an organization determination on behalf of an enrollee, an affiliated provider would need to be an authorized representative, and a non-affiliated provider would need to be an assignee. Although we discussed this issue in our June 29, 2000 final rule (65 FR 40,282), some confusion has continued.

The intent of the regulation has always been for the provisions governing requests for organization determinations to be more inclusive than the provisions governing requests for appeals. To clarify this point, we are proposing to eliminate the existing cross-reference to § 422.574 and list those who may request an M+C organization determination under § 422.566(c). Determination requests may be made by—

- The enrollee (including his or her authorized representative);
- Any provider that furnishes, or intends to furnish, services to the enrollee; or
- The legal representative of a deceased enrollee's estate.

The fact that an individual or entity may request an organization determination does not necessarily entitle that individual or entity the right to request an appeal, unless the conditions for party status under § 422.574 are met.

2. Effectuation Times When M+C Organizations File Appeals

The current regulations at §§ 422.618 and 422.619 establish effectuation times when an M+C organization's denial of coverage or payment is overturned, either through its own reconsideration process or by an independent outside entity. The M+C organization may not appeal the overturning of its denial of coverage or payment in either of these situations. Section 422.618 also requires that if the independent outside entity's determination is reversed (in whole or in part) by an administrative law judge (ALJ), or at a higher level of appeal, the M+C organization must pay for, authorize, or provide the service under dispute as expeditiously as the enrollee's health condition requires, but no later than 60 calendar days from the date the M+C organization receives notice reversing the determination. In these situations, the M+C organization, like an enrollee, has 60 days to appeal.

The ambiguity in the current regulations, which require effectuation of a determination within 60 days, but also permit further appeal within the same time frame, results in confusion. To reconcile these two regulatory provisions, we are proposing that M+C organizations may await the outcome of a Departmental Appeals Board (the Board) review before effectuating a decision of an ALJ. This proposal would serve to balance the M+C organizations' right to appeal with the need to ensure that an enrollee would not be faced with a potentially large debt in the event that the Board overturns the ALJ after the service had been rendered to the enrollee. The Board's practice is to screen all of its cases upon arrival to identify and give priority to pre-service denial cases, including immediate assignment and resolution of cases involving imminent health risks.

In § 422.618(c), we would retain the 60-day effectuation requirement for reversals by an ALJ or higher level of appeal because we do not want to negate the M+C organizations' 60-day right to request an appeal to the Board or higher level. However, our expectation is that M+C organizations would not take the maximum 60 days to effectuate a decision they do not intend to appeal. We are proposing to redesignate the current § 422.618(c) as § 422.618(c)(1) and add a new § 422.618(c)(2) to allow for an exception to the 60-day standard if the M+C organization decides to request a board review consistent with § 422.608. We would allow the M+C organization to await the outcome of the Board review before it pays for, authorizes, or provides the service under dispute. Under the proposed provision, we would require an M+C organization that files an appeal with the Board concurrently to send a copy of its request and any accompanying documents to the enrollee. Additionally, the M+C organization would be required to notify the independent review entity of the requested appeal.

Consistent with this proposed change, we would also revise § 422.619(c) with regard to effectuating expedited reconsidered determinations. As in standard appeals, we would allow an exception for the M+C organization to await the outcome of the Board's review before the M+C organization authorizes or provides the service under dispute. Additionally, an M+C organization that files an appeal with the Board would be required concurrently to send a copy of its request and any accompanying documents to the enrollee, as well as notify the independent review entity of the requested appeal.

We considered reducing the time frame in § 422.619(c) from 60 days to 72 hours for the M+C organization to authorize or provide the service under dispute. This would have been consistent with our reasoning for other effectuation guidelines because if the M+C organization originally had rendered a decision favorable to the enrollee, it would have been required to do so within the maximum organization determination time frame. However, we decided to maintain the 60-day effectuation time frame, so that we do not limit the M+C organizations' 60-day window in which to appeal. If we had required M+C organizations to effectuate a decision within 72 hours, we would have forced them to decide whether to appeal within that same 72 hours. Thus, we would have had to require notice to the enrollee regarding effectuation. Moreover, the M+C organization would have to send a second notice to the enrollee when the M+C organization filed its appeal. To eliminate confusion for enrollees and a

cumbersome process for M+C organizations, we would maintain the requirement that when an expedited determination is reversed, in whole or in part, by an ALJ or at a higher level of appeal, the M+C organization must effectuate the decision within 60 days. We would emphasize, however, that the M+C organization would have to meet the medical exigency standard for providing or authorizing services as expeditiously as the enrollee's health condition requires regardless of the 60-day time frame.

H. Requiring Health Care Prepayment Plans (HCPPs) and Remaining Cost Plans To Follow the M+C Appeals Process

We are soliciting comments on whether HCPPs and the remaining cost plans should follow the M+C appeals and grievance processes under subpart M of part 422. Currently, HCPPs and the remaining cost plans adhere to the provisions under subpart Q of part 417, which implemented the former managed care program for risk contracts under section 1876 of the Act. We believe that the M+C appeals process provides enhanced enrollee protections, such as faster processing times and streamlined notice procedures. We recognize that the remaining cost plans are expected to be phased out by 2004, therefore we solicit comments concerning whether the burdens associated with complying with subpart M of part 422 outweigh the protections afforded to beneficiaries. Moreover, unlike cost plans, HCPPs do not provide in-patient hospital services, thus, we are not proposing that HCPPs follow §§ 422.620 through 422.622, which provide for immediate Peer Review Organization review for in-patient hospital discharges.

I. Technical Clarifications

1. Grace Period for Late Premium Payments

We are proposing a technical change in this proposed rule to address concerns M+C organizations have raised concerning when the 90-day grace period for premium payments begins running. The regulation currently provides, at § 422.74(d)(1)(ii), that an M+C organization may only disenroll a Medicare enrollee when the organization has not received payment within 90 days after the date it has sent a written notice of nonpayment to the enrollee. Several M+C organizations have asked that the 90-day grace period begin to run on the day the premium payment was due, not the day the notice was sent. We believe that as long as the beneficiary receives notice under § 422.74(d)(1)(i)(C) that he or she would be disenrolled if payment is not made by the end of the grace period, a 90-day grace period beginning at the payment due date is sufficient. Because the notice has to be provided within 20 days after the payment was due, this would ensure the enrollee of 70 days following the notice within which to make payment, and avoid disenrollment.

We are accordingly proposing to revise § 422.74(d)(1)(ii) to provide that the M+C organization may only disenroll a Medicare enrollee when the organization has not received payment within 90 days after the date the premium was due.

2. Payment for Hospice Care

We are proposing a clarification in this proposed rule to provide information concerning changes in M+C payments when an individual has elected hospice care.

We would revise § 422.266(d) to make clear that when enrollees of M+C plans elect to receive hospice care under § 418.24, we would not make any payment for the hospice care to the M+C plan beginning with the next month's payment after the election, except for the portion of the payment applicable to additional benefits, as described in § 422.312. Currently, the regulation refers to capitation payments being reduced to this amount. This clarification makes the language of the rules regarding hospice care for M+C enrollees the same as the rules for HMOs and CMPs.

We propose to revise § 422.266(c) to reflect this clarification.

II. Provisions of This Proposed Rule

The provisions of this proposed rule are as follows:

- In § 409.20, we would add a paragraph (c)(4) to add a definition of the term ''posthospital SNF care'' to include SNF care that does not follow a hospital stay if the beneficiary is enrolled in an M+C plan.
- In § 409.30, we would revise paragraph (b)(2) to add an exception to the preadmission requirements for enrollees of M+C organization plans.
- In § 409.31, we would add a new paragraph (b)(2)(iii) to add a condition to the level of care requirements that for an M+C enrollee, a physician has determined that a direct admission to a SNF without an inpatient hospital stay would be medically appropriate.
- In § 417.479, we would revise paragraph (h) to modify the reporting requirements concerning physician incentive plans.
- In § 422.2, we would revise the definition of additional benefits to include a reduction in the Medicare beneficiary's standard Part B premium.
- In § 422.50, we would revise paragraph (a)(2) to include in the exception to the general rule that a beneficiary with end-stage-renal-disease (ESRD) is not eligible to elect an M+C plan, that an individual with ESRD whose enrollment in an M+C plan is discontinued because we or the M+C organization terminated the organization's contract for the plan, is eligible to elect another M+C plan, if the original enrollment was terminated after December 31, 1998.
- In § 422.74, we would revise paragraph (d)(1)(ii) to reflect that an M+C organization may only disenroll a Medicare enrollee when the organization has not received payment within 90 days after the date the premium payment was due.
- In § 422.74, we would revise paragraph (d)(4) to allow M+C organizations to operate ''visitor'' or ''traveler'' programs that provide benefits beyond urgent and emergent care to their enrollees who are out of the service area for more than 6 months but less than 12 months.
- In § 422.101, we would revise paragraph (b)(3) to reflect the provisions in section 1852(a)(2)(C) of the Act permitting M+C organizations with plans that cover large areas encompassing more than one local coverage policy area to elect to have the local coverage policy for the part of the area that is the most beneficial to the M+C enrollees apply to all M+C enrollees in the plan. This policy allows M+C organizations to standardize coverage decisions and provider contracts across the entire plan, rather than having different policies apply to different geographic areas of the same plan.
- In § 422.101, we would add a paragraph (c) to include in the requirements relating to Medicare covered benefits the option to provide for coverage as a Medicare benefit of posthospital SNF care in the absence of a prior hospital stay.
- In § 422.106, we would add a new paragraph (c) to reflect the provisions in section 1857(i) of the Act permitting us to grant a waiver or modification of requirements in part 422 that hinder the design of, the offering of, or the enrollment in, M+C plans under contracts between M+C organizations and employers, labor organizations, or the trustees of benefits funds.
- In § 422.109, we would revise the definition of ''significant cost'' to include legislative changes in benefits

and detail that if we project that the legislative changes in benefits would result in significant costs to M+C organizations, we would pay (through our fiscal intermediaries and carriers) the additional costs outside the contract until the next payment update. Subsequently, an adjustment would be made to payments under the contract to reflect the new costs.

- In § 422.111, we would add a new paragraph (f)(8)(iii) to add any reduction in Part B premiums to the list of information that must be disclosed to each enrollee electing an M+C plan.
- We would add a new § 422.133 to contain the new requirement that M+C organizations return residents of SNFs to their home SNF for posthospital extended care services after discharge from a hospital. This new section would contain the definition of home SNF, the requirements for return to the home SNF, and the exceptions to the general rule.
- In § 422.210, we would revise paragraph (a) to reflect changes to the reporting requirements concerning physician incentive plans.
- In § 422.250, we would revise paragraph (a)(1) to reflect that beginning with the initial payment for CY 2003, monthly payments to M+C organizations may be reduced by the amount described in new § 422.312(d) for the reduction of the beneficiary's standard Part B premium.
- In § 422.250, we would also revise paragraph (a)(2) to redesignate paragraph (a)(2)(i)(B) as (a)(2)(i)(C) and add a new paragraph (a)(2)(i)(B) to reflect that when we establish ESRD rates, we would apply appropriate adjustments, including risk adjustment factors.
- In § 422.256, we would revise paragraph (b) to reflect that we would make appropriate payment adjustments for new legislative changes in benefits that would result in significant costs to M+C organizations, based on an analysis by our chief actuary of the costs associated with the new legislative change in benefits.
- In § 422.266, we would revise paragraph (c) to clarify that when enrollees of M+C plans elect to receive hospice care under § 418.24, we would not make any payment for the hospice care to the M+C plan beginning with the next month's payment after the election, except for the portion of the payment applicable to additional benefits, as described in § 422.312.
- In § 422.312, we would redesignate paragraph (d) as paragraph (e) and add a new paragraph (d) to reflect that an M+C organization may apply adjusted excess amounts to additional benefits and accept lower payments from us, which would allow a reduction of standard Part B premiums for its enrollees. The reduction in standard Part B premiums could not equal more than 80 percent of the reduction in payments to the M+C organization and the payment reduction could not exceed 125 percent of the standard Part B premium. In addition, the reduction in premium would have to be applied uniformly to all similarly situated enrollees.
- We would add a new § 422.521 to indicate that we would not implement, other than at the beginning of a calendar year, regulations that would impose new cost or burden on M+C organizations or plan, unless a different effective date is required by statute.
- In § 422.566, we would revise paragraph (c) to delete the cross-reference to § 422.574 and enumerate who can request an organization determination.
- In § 422.618, we would revise paragraph (c) to add an effectuation exception when the M+C organization files an appeal with the Departmental Appeals Board in the case of a standard reconsidered determination.
- In § 422.619, we would revise paragraph (c) to add an effectuation exception when the M+C organization files an appeal with the Departmental Appeals Board in the case of an expedited reconsidered determination.
- In § 422.758, we would revise paragraph (b) to include the new maximum amount of the civil money penalty that we would impose on M+C organizations that terminate their contracts in a manner other than that described in § 422.512. The new penalty amount would be $100,000 or $250 per Medicare enrollee from the terminated plan or plans, whichever is greater.

III. Collection of Information Requirements

Under the Paperwork Reduction Act of 1995 (PRA), we are required to provide 60-day notice in the **Federal Register** and solicit public comment before a collection of information requirement is submitted to the Office of Management and Budget (OMB) for review and approval. In order to fairly evaluate whether an information collection should be approved by OMB, section 3506(c)(2)(A) of the PRA requires that we solicit comment on the following issues:

- The need for the information collection and its usefulness in carrying out the proper functions of our agency.
- The accuracy of our estimate of the information collection burden.
- The quality, utility, and clarity of the information to be collected.
- Recommendations to minimize the information collection burden on the affected public, including automated collection techniques.

We are soliciting public comment on each of these issues for the following sections of this document that contain information collection requirements:

Section 417.479(h)—This section states that each HMO must provide to us information concerning its physician incentive plans as requested, and each HMO must provide information to any Medicare beneficiary who requests it.

This section requires the HMOs to disclose information to us and to Medicare beneficiaries. While this requirement is subject to the PRA, the burden associated with this requirement is captured in approved collection 0938–0700, with an expiration date of April 30, 2004.

Section 422.50(a)(2)—This section states that an individual who develops end-stage renal disease while enrolled in an M+C plan or in a health plan offered by an M+C organization is eligible to elect an M+C plan offered by that organization. Also, an individual with end-stage renal disease whose enrollment in an M+C plan is terminated or discontinued after December 31, 1998 because we or the M+C organization terminated the M+C organization's contract for the plan or discontinued the plan in the area in which the individual resides is eligible to elect another M+C plan. An individual who elects an M+C plan under paragraph (a)(2)(ii) of this section may elect another M+C plan if the plan elected under paragraph (a)(2)(ii) also is terminated or discontinued in the area in which the individual resides.

The burden associated with this requirement is the time and effort for the individual to submit a new election form. While this section is subject to the PRA, this burden is currently captured in approved collection 0938–0753, due to expire October 31, 2002 (currently at OMB awaiting re-approval).

Section 422.74(d)(4)(i)—This section states that unless continuation of enrollment is elected under § 422.54, the M+C organization must disenroll an individual if the M+C organization establishes, on the basis of a written statement from the individual or other evidence acceptable to us, that the individual has permanently moved.

This section requires that the individual must prepare and provide a written statement to the M+C organization that he or she has permanently moved. While this requirement is subject to the PRA, the

burden associated with this requirement is captured in approved collection 0938–0753.

Section 422.106(c)(1)—M+C organizations may request, in writing, from us a waiver or modification of those requirements in part 422 that hinder the design of, the offering of, or the enrollment in, M+C plans under contracts between M+C organizations and employers, labor organizations, or the trustees of benefits funds.

We estimate that there will be approximately 200 requests for waivers or modifications submitted on an annual basis and that it will take approximately 2 hours to prepare each request. The total annual burden associated with this requirement is estimated to be 400 hours.

Section 422.106(c)(2)—This section states that approved waivers or modifications under this paragraph may be used by any M+C organization on developing its Adjusted Community Rate Proposal (ACRP). Any M+C organization using a waiver or modification must include that information in the cover letter of its ACRP submission.

The burden associated with this requirement is the time and effort for the M+C organization to include the information in the cover letter of its ACRP submission. Although this requirement is subject to the PRA, the burden is minimal; therefore, the burden is captured in the analysis for § 422.106(c)(1).

Section 422.111(f)(8)(iii)—This section has been revised to add any reduction in Part B premiums to the list of information that must be disclosed to each enrollee electing an M+C plan.

The burden associated with this requirement is the time and effort for the M+C organization to disclose information to each enrollee electing an M+C plan. Although this requirement is subject to the PRA, the burden associated with this requirement is captured in approved collection 0938–0778.

Section 422.210(a)(1)—This section states that each M+C organization must provide to us upon request, descriptive information about its physician incentive plan in sufficient detail to enable us to determine whether that plan complies with the requirements of § 422.208.

This section requires the M+C organization to prepare and submit, upon request, descriptive information to us. While this requirement is subject to the PRA, the burden associated with this requirement is captured in approved collection 0938–0700.

Section 422.266(a)—An M+C organization that has a contract under subpart K of this part must inform each Medicare enrollee eligible to select hospice care under § 418.24 of this chapter about the availability of hospice care (in a manner that objectively presents all available hospice providers, including a statement of any ownership interest in a hospice held by the M+C organization or a related entity).

While this requirement is subject to the PRA, the burden associated with it is captured in approved collections 0938–0753 and 0938–0302.

In summary, the total burden hours for this proposed rule is calculated to be 400 hours. The breakdown is as follows:

Section 417.479(h)—burden captured in 0938–0700
Section 422.50(a)(2)—burden captured in 0938–0753
Section 422.74(d)(4)(i)—burden captured in 0938–0753
Section 422.106(c)(1)—400 hours
Section 422.106(c)(2)—burden captured in 422.106(c)(1)
Section 422.111(f)(8)(iii)—burden captured in 0938–0788
Section 422.210(a)(1)—burden captured in 0938–0700
Section 422.266(a)—burden captured in 0938–0753 & 0302

If you comment on these information collection and recordkeeping requirements, please mail one original and three copies directly to the following: Centers for Medicare & Medicaid Services, Office of Information Services, Information Technology Investment Management Group, Attn: Dawn Willinghan, CMS–4041–P, Room N2–14–26, 7500 Security Boulevard, Baltimore, MD 21244–1850, and Office of Information and Regulatory Affairs, Office of Management and Budget, Room 10235, New Executive Office Building, Washington, DC 20503, Attn: Brenda Aguilar, CMS Desk Officer.

We have submitted a copy of this proposed rule to OMB for its review of the information collection requirements in § 422.106. This requirement is not effective until it has been approved by OMB.

IV. Response to Comments

Because of the large number of items of correspondence we normally receive on **Federal Register** documents published for comment, we are not able to acknowledge or respond to them individually. We will consider all comments we receive by the date and time specified in the **DATES** section of this preamble, and, if we proceed with a subsequent document, we will respond to the major comments in the preamble to that document.

V. Regulatory Impact Statement

A. Overall Impact

We have examined the impacts of this proposed rule as required by Executive Order 12866 (September 1993, Regulatory Planning and Review) and the Regulatory Flexibility Act (RFA) (September 19, 1980, Public Law 96–354). Executive Order 12866 directs agencies to assess all costs and benefits of available regulatory alternatives and, if regulation is necessary, to select regulatory approaches that maximize net benefits (including potential economic, environmental, public health and safety effects, distributive impacts, and equity). A regulatory impact analysis (RIA) must be prepared for major rules with economically significant effects ($100 million or more annually).

As a result of the proposed changes to the M+C regulations that reflect the provisions of the BIPA in this proposed rule, this proposed rule is not a major rule with economically significant effects as defined in Title 5, U.S.C. section 804(2) and is not an economically significant rule under Executive Order 12866. This proposed rule would result in increases in total expenditures of less than $100 million per year.

However, we are providing estimates of the budgetary impact of section 605 of the Act, which mandated revised ESRD payments. The revised rates affect those M+C organizations that enroll the approximately 18,000 ESRD beneficiaries in their plans. The additional cash expenditures for these M+C ESRD beneficiaries under this provision of the BIPA are estimated to be—

- $35 million in FY 2002 (for 9 months of costs based on the effective date of January 2002);
- $55 million in FY 2003;
- $55 million in FY 2004;
- $60 million in FY 2005; and
- $65 million in FY 2006.

These estimates assume continuation of the current restrictions on enrollment in the M+C program for ESRD beneficiaries. These estimates also include the impact of adjusting for age and sex and the impact of raising the ESRD base rates by 3 percent.

The RFA requires agencies to analyze options for regulatory relief of small businesses. For purposes of the RFA, small entities include small businesses, nonprofit organizations, and government agencies. Most hospitals and most other providers and suppliers are small entities, either by nonprofit status, or by having revenues of between $5.0 million and $25 million or less

annually. (For details see the Small Business Administration publication that sets forth size standards for health care industries at 65 FR 69432.) Individuals and States are not included in the definition of small entities.

For purposes of the RFA, most managed care organizations are not considered to be small entities. We estimate that fewer than 5 out of 177 M+C organization contractors have annual revenues of $7.5 million or less. Approximately 35 percent of M+C organization contractors have tax-exempt status, and thus, for purposes of the RFA are considered to be small entities. We have examined the economic impact of this proposed rule on M+C organizations, including those that are tax-exempt, and thus small entities, and we find that overall the economic impact is positive, due to the revised ESRD rates mandated by section 605 of the BIPA, thus generating an increase in payments; we certify that this proposed rule would not have a significant impact on a substantial number of small businesses. The data available do not allow us to determine the distributional effects of this increase. We have not considered alternatives to lessen the impact or regulatory burden of this proposed rule because no burden is imposed.

In addition, section 1102(b) of the Act requires us to prepare a regulatory impact analysis if a proposed rule may have a significant impact on the operations of a substantial number of small rural hospitals. This analysis must conform to the provisions of section 603 of the RFA. For purposes of section 1102(b) of the Act, we define a small rural hospital as a hospital that is located outside of a Metropolitan Statistical Area (MSA) and has fewer than 100 beds. Almost 2 percent of M+C enrollees reside in payment areas outside MSAs. Because information on the payment terms in contracts between M+C organizations and their providers is not available, data are not available on the level of this economic impact.

B. The Unfunded Mandates Act

Section 202 of the Unfunded Mandates Reform Act of 1998 (UMRA) requires that agencies assess anticipated costs and benefits before issuing any rule that may result in an expenditure in any 1 year by State, local, or tribal governments, in the aggregate, or by the private sector, of $110 million. We have determined, and we certify that this proposed rule would have no consequential effect on State, local, or tribal governments.

C. Federalism

Executive Order 13132 establishes certain requirements that an agency must meet when it promulgates a proposed or final rule that imposes substantial direct requirement costs on State and local governments, preempts State law, or otherwise has Federalism implications. This proposed rule would impose no direct requirement costs on State and local government, would not preempt State law, or have any Federalism implications.

In accordance with the provisions of Executive Order 12866, this proposed rule was reviewed by the Office of Management and Budget.

List of Subjects

42 CFR Part 409

Health facilities, Medicare.

42 CFR Part 417

Administrative practice and procedure, Grants programs—health, Health care, Health insurance, Health maintenance organizations (HMO), Loan programs—health, Medicare, Reporting and recordkeeping requirements.

42 CFR Part 422

Administrative practice and procedure, Health facilities, Health Maintenance Organizations (HMO), Medicare+Choice, Penalties, Privacy, Provider-sponsored organizations (PSO), Reporting and recordkeeping requirements.

For the reasons set forth in the preamble, the Centers for Medicare & Medicaid Services proposes to amend 42 CFR chapter IV as set forth below:

PART 409—HOSPITAL INSURANCE BENEFITS

1. The authority citation for part 409 continues to read as follows:

Authority: Secs. 1102 and 1871 of the Social Security Act (42 U.S.C. 1302 and 1395hh).

Subpart C—Posthospital SNF Care

2. In § 409.20, the following changes are made to read as set forth below:

A. Paragraph (c)(3) is revised.

B. Paragraph (c)(4) is added.

§ 409.20 Coverage of services.

* * * * *

(c) * * *

(3) The term *swing-bed hospital* includes a CAH with swing-bed approval under subpart F of part 485 of this chapter.

(4) The term *posthospital SNF care* includes SNF care that does not follow a hospital stay when the beneficiary is enrolled in a plan, as defined in § 422.4 of this chapter, offered by a Medicare+Choice (M+C) organization, that includes the benefits described in § 422.101(c) of this chapter.

Subpart D—Requirements for Coverage of Posthospital SNF Care

3. In § 409.30, paragraph (b)(2) is revised to read as follows:

§ 409.30 Basic requirements.

* * * * *

(b) * * *

(2) The following exceptions apply—

(i) A beneficiary for whom posthospital SNF care would not be medically appropriate within 30 days after discharge from the hospital or CAH, or a beneficiary enrolled in a Medicare+Choice (M+C) plan, may be admitted at the time it would be medically appropriate to begin an active course of treatment.

(ii) If, upon admission to the SNF, the beneficiary was enrolled in an M+C plan, as defined in § 422.4 of this chapter, offering the benefits described in § 422.101(c) of this chapter, the beneficiary will be considered to have met the requirements described in paragraphs (a) and (b) of this section, and also in § 409.31(b)(2), for the duration of the SNF stay.

4. In § 409.31 paragraph (b)(2)(ii) is revised, and a new paragraph (b)(2)(iii) is added to read as follows:

§ 409.31 Level of care requirement.

(b) * * *

(2) * * *

(ii) Which arose while the beneficiary was receiving care in a SNF or swing-bed hospital or inpatient CAH services; or

(iii) For which, for an M+C enrollee described in § 409.20(c)(4), a physician has determined that a direct admission to a SNF without an inpatient hospital or inpatient CAH stay would be medically appropriate.

* * * * *

PART 417—HEALTH MAINTENANCE ORGANIZATIONS, COMPETITIVE MEDICAL PLANS, AND HEALTH CARE PREPAYMENT PLANS

5. The authority citation for part 417 continues to read as follows:

Authority: Secs. 1102 and 1871 of the Social Security Act (42 U.S.C. 1302 and 1395hh), secs. 1301, 1306, and 1310 of the Public Health Service Act (42 U.S.C. 300e, 300e–5, and 300e–9), and 31 U.S.C. 9701.

Subpart L—Medicare Contract Requirements

6. In § 417.479, paragraph (h)(1) and the heading of paragraph (h)(2) are revised and paragraph (h)(2) introductory text is added to read as follows:

§ 417.479 Requirements for physician incentive plans.

* * * * *

(h) *Disclosure requirements for organizations with physician incentive plans.* (1) *Disclosure to CMS.* Each HMO must provide to CMS information concerning its physician incentive plans as requested.

(2) *Disclosure to Medicare beneficiaries.* An HMO must provide the following information to any Medicare beneficiary who requests it:

* * * * *

PART 422—MEDICARE+CHOICE PROGRAM

7. The authority citation for part 422 continues to read as follows:

Authority: Secs. 1102 and 1871 of the Social Security Act (42 U.S.C. 1302 and 1395hh).

Subpart A—General Provisions

8. In § 422.2, the introductory text is republished, and the definition of *Additional benefits* is revised to read as follows:

§ 422.2 Definitions.

As used in this part—

* * * * *

Additional benefits are health care services not covered by Medicare, reductions in premiums or cost-sharing for Medicare covered services, and reductions in the Medicare beneficiary's standard Part B premium, funded from adjusted excess amounts as calculated in the ACR.

* * * * *

Subpart B—Eligibility, Election, and Enrollment

9. In § 422.50, paragraph (a)(2) is revised to read as follows:

§ 422.50 Eligibility to elect an M+C plan.

(a) * * *

(2) Has not been medically determined to have end-stage renal disease, except that—

(i) An individual who develops end-stage renal disease while enrolled in an M+C plan or in a health plan offered by the M+C organization is eligible to elect an M+C plan offered by that organization; and

(ii) An individual with end-stage renal disease whose enrollment in an M+C plan was terminated or discontinued after December 31, 1998, because CMS or the M+C organization terminated the M+C organization's contract for the plan or discontinued the plan in the area in which the individual resides, is eligible to elect another M+C plan.

(iii) An individual who elects an M+C plan under paragraph (a)(2)(ii) of this section may elect another M+C plan if the plan elected under paragraph (a)(2)(ii) of this section also is terminated or discontinued in the area in which the individual resides.

* * * * *

10. In § 422.74, the following changes are made to read as set forth below:

A. Paragraph (d)(1)(ii) is revised.

B. Paragraph (d)(4) is revised.

§ 422.74 Disenrollment by the M+C organization.

* * * * *

(d) * * *

(1) * * *

(ii) The M+C organization only disenrolls a Medicare enrollee when the organization has not received payment within 90 days after the date the premium was due.

* * * * *

(4) *Individual no longer resides in the M+C plan's service area.*

(i) *Basis for disenrollment.* Unless continuation of enrollment is elected under § 422.54, the M+C organization must disenroll an individual if the M+C organization establishes, on the basis of a written statement from the individual or other evidence acceptable to CMS that the individual has permanently moved—

(A) Out of the M+C plan's service area; or

(B) From the residence in which the individual resided at the time of enrollment in the M+C plan to an area outside the M+C plan's service area, for those individuals who enrolled in the M+C plan under the eligibility requirements at § 422.50(a)(3)(ii) or (a)(4).

(ii) *Special rule.* If the individual has not moved from the M+C plan's service area (or residence, as described in paragraph (d)(4)(i)(B) of this section), but has left the service area (or residence) for more than 6 months, the M+C organization must disenroll the individual from the plan, unless the exception in paragraph (d)(4)(iii) of this section applies.

(iii) *Exception.* If the M+C plan covers services other than emergent, urgent, maintenance and poststabilization, and renal dialysis services (as described in §§ 422.100(b)(1)(iv) and 422.113) when the individual is out of the service area for a period of consecutive days longer than 6 months but less than 12 months, but within the United States (as defined in § 400.200 of this chapter), the M+C organization may elect to offer to the individual the option of remaining enrolled in the M+C plan if—

(A) The individual is disenrolled on the first day of the 13th month after the individual left the service area (or residence, if paragraph (d)(4)(i)(B) of this section applies);

(B) The individual understands and accepts any restrictions imposed by the M+C plan on obtaining these services while absent from the M+C plan's service area for the extended period; and

(C) The M+C organization makes this option available to all Medicare enrollees who are absent for an extended period from the M+C plan's service area. However, M+C organizations may limit this option to enrollees who travel to certain areas, as defined by the M+C organization, and who receive services from qualified providers who directly provide, arrange for, or pay for health care.

* * * * *

Subpart C—Benefits and Beneficiary Protections

11. In § 422.101, the following changes are made to read as follows:

A. Paragraph (b)(3) is revised.

B. Paragraph (c) is added.

§ 422.101 Requirements relating to basic benefits.

* * * * *

(b) * * *

(3) Written coverage decisions of local carriers and intermediaries with jurisdiction for claims in the geographic area in which services are covered under the M+C plan, except that M+C plans that cover areas encompassing more than one local coverage policy area may elect to have the local coverage decisions for the part of the area that is the most beneficial to the M+C enrollees apply with respect to all M+C enrollees in the plan. M+C plans that elect this option must consult with CMS prior to selecting the area that has local coverage policies that are most beneficial to M+C enrollees.

(c) M+C organizations may elect to furnish, as part of their Medicare covered benefits, coverage of posthospital SNF care as described in subparts C and D of this part, in the absence of the prior qualifying hospital stay that would otherwise be required for coverage of this care.

12. In § 422.106, the following changes are made to read as follows:

A. The section heading is revised.

B. Paragraphs (a) introductory text, (a)(1) and (a)(2) are revised.

C. Paragraph (b) introductory text is revised.

D. A new paragraph (c) is added.

§ 422.106 Coordination of benefits with employer or union group health plans and Medicaid.

(a) *General rule.* If an M+C organization contracts with an employer, labor organization, or the trustees of a fund established by one or more employers or labor organizations that cover enrollees in an M+C plan, or contracts with a State Medicaid agency to provide Medicaid benefits to individuals who are eligible for both Medicare and Medicaid, and who are enrolled in an M+C plan, the enrollees must be provided the same benefits as all other enrollees in the M+C plan, with the employer, labor organization, fund trustees, or Medicaid benefits supplementing the M+C plan benefits. Jurisdiction regulating benefits under these circumstances is as follows:

(1) All requirements of this part that apply to the M+C program apply to the M+C plan coverage provided to enrollees eligible for benefits under an employer, labor organization, trustees of a fund established by one or more employers or labor organizations, or Medicaid contract.

(2) Employer benefits that complement an M+C plan, and the marketing materials associated with the benefits, are not subject to review or approval by CMS. M+C plan benefits provided to enrollees of the employer, labor organization, or trustees of the fund established to furnish benefits, and the associated marketing materials, are subject to CMS review and approval.

(3) * * *

(b) *Examples.* Permissible employer, labor organization, benefit fund trustee, or Medicaid plan benefits include the following:

* * * * *

(c) *Waiver or modification.* (1) M+C organizations may request, in writing, from CMS, a waiver or modification of those requirements in this part that hinder the design of, the offering of, or the enrollment in, M+C plans under contracts between M+C organizations and employers, labor organizations, or the trustees of funds established by one or more employers or labor organizations to furnish benefits to the entity's employees, former employees, or members or former members of the labor organizations.

(2) Approved waivers or modifications under this paragraph may be used by any M+C organization in developing its Adjusted Community Rate Proposal (ACRP). Any M+C organization using a waiver or modification must include that information in the cover letter of its ACRP submission.

13. Section 422.109 is revised to read as follows:

§ 422.109 Effect of national coverage determinations (NCDs) and legislative changes in benefits.

(a) *Definitions.* The term *significant cost*, as it relates to a particular NCD or legislative change in benefits, means either of the following:

(1) The average cost of furnishing a single service exceeds a cost threshold that—

(i) For calendar years 1998 and 1999, is $100,000; and

(ii) For calendar year 2000 and subsequent calendar years, is the preceding year's dollar threshold adjusted to reflect the national per capita growth percentage described in § 422.254(b).

(2) The estimated cost of all Medicare services furnished as a result of a particular NCD or legislative change in benefits represents at least 0.1 percent of the national standardized annual capitation rate, as described in § 422.254(f), multiplied by the total number of Medicare beneficiaries for the applicable calendar year.

(b) *General rule.* If CMS determines and announces that an NCD or legislative change in benefits meets the criteria for significant cost described in paragraph (a) of this section, an M+C organization is not required to assume risk for the costs of that service or benefit until the contract year for which payments are appropriately adjusted to take into account the cost of the NCD service or legislative change in benefits.

(c) *Before payment adjustments become effective.* Before the contract year that payment adjustments that take into account the significant cost of the NCD service or legislative change in benefits become effective, the service or benefit is not included in the M+C organization's contract with CMS, and is not a covered benefit under the contract. The following rules apply to these services or benefits:

(1) Medicare payment for the service or benefit is made directly by the fiscal intermediary and carrier to the provider furnishing the service or benefit in accordance with original Medicare payment rules, methods, and requirements.

(2) Costs for NCD services or legislative changes in benefits for which CMS intermediaries and carriers will not make payment and are the responsibility of the M+C organization are—

(i) Services necessary to diagnose a condition covered by the NCD or legislative changes in benefits;

(ii) Most services furnished as follow-up care to the NCD service or legislative change in benefits;

(iii) Any service that is already a Medicare-covered service and included in the annual M+C capitation rate or previously adjusted payments; and

(iv) Any service, including the costs of the NCD service or legislative change in benefits, to the extent the M+C organization is already obligated to cover it as an additional benefit under § 422.312 or supplemental benefit under § 422.102.

(3) Costs for NCD services or legislative changes in benefits for which CMS fiscal intermediaries and carriers will make payment are—

(i) Costs relating directly to the provision of services related to the NCD or legislative change in benefits that were noncovered services before the issuance of the NCD or legislative change in benefits; and

(ii) A service that is not included in the M+C capitation payment rate.

(4) Beneficiaries are liable for any applicable coinsurance and deductible amounts.

(d) *After payment adjustments become effective.* For the contract year in which payment adjustments that take into account the significant cost of the NCD service or legislative change in benefits are in effect, the service or benefit is included in the M+C organization's contract with CMS, and is a covered benefit under the contract. Subject to all applicable rules under this part, the M+C organization must furnish, arrange, or pay for the NCD service or legislative change in benefits. M+C organizations may establish separate plan rules for these services and benefits, subject to CMS review and approval. CMS may, at its discretion, issue overriding instructions limiting or revising the M+C plan rules, depending on the specific NCD or legislative change in benefits. For these services or benefits, the Medicare enrollee will be responsible for M+C plan cost sharing, as approved by CMS or unless otherwise instructed by CMS.

14. In § 422.111, a new paragraph (f)(8)(iii) is added to read as follows:

§ 422.111 Disclosure requirements.

* * * * *

(f) * * *

(8) * * *

(iii) The reduction in Part B premiums, if any.

* * * * *

15. A new § 422.133 is added to subpart C to read as follows:

§ 422.133 Return to home skilled nursing facility.

(a) *General rule*. Beginning with contracts entered into or renewed on or after December 20, 2000, M+C plans must provide coverage of posthospital extended care services to Medicare enrollees through a home skilled nursing facility if the enrollee elects to receive the coverage through the home skilled nursing facility, and if the home skilled nursing facility either has a contract with the M+C organization or agrees to accept substantially similar payment under the same terms and conditions that apply to similar skilled nursing facilities that contract with the M+C organization.

(b) *Definitions*. In this subpart, *home skilled nursing facility* means—

(1) The skilled nursing facility in which the enrollee resided at the time of admission to the hospital preceding the receipt of posthospital extended care services;

(2) A skilled nursing facility that is providing posthospital extended care services through a continuing care retirement community in which the M+C plan enrollee was a resident at the time of admission to the hospital. A continuing care retirement community is an arrangement under which housing and health-related services are provided (or arranged) through an organization for the enrollee under an agreement that is effective for the life of the enrollee or for a specified period; or

(3) The skilled nursing facility in which the spouse of the enrollee is residing at the time of discharge from the hospital.

(c) *Coverage no less favorable*. The posthospital extended care scope of services, cost-sharing, and access to coverage provided by the home skilled nursing facility must be no less favorable to the enrollee than posthospital extended care services coverage that would be provided to the enrollee by a skilled nursing facility that would be otherwise covered under the M+C plan.

(d) *Exceptions*. The requirement to allow an M+C plan enrollee to elect to return to the home skilled nursing facility for posthospital extended care services after discharge from the hospital does not do the following:

(1) Require coverage through a skilled nursing facility that is not otherwise qualified to provide benefits under Part A for Medicare beneficiaries not enrolled in the M+C plan.

(2) Prevent a skilled nursing facility from refusing to accept, or imposing conditions on the acceptance of, an enrollee for the receipt of posthospital extended care services.

Subpart E—Relationships with Providers

16. In § 422.210 paragraph (a) and the introductory text to paragraph (b) are revised to read as follows:

§ 422.210 Disclosure of physician incentive plans.

(a) *Disclosure to CMS*. Each M+C organization must provide to CMS information concerning its physician incentive plans as requested.

(b) *Disclosure to Medicare beneficiaries*. Each M+C organization must provide the following information to any Medicare beneficiary who requests it:

* * * * *

Subpart F—Payments to Medicare+Choice Organizations

17. In § 422.250, the following changes are made to read as follows:

A. Paragraph (a)(1) is revised.

B. Paragraph (a)(2)(i)(B) is redesignated as (a)(2)(i)(C).

C. A new paragraph (a)(2)(i)(B) is added.

§ 422.250 General provisions.

(a) *Monthly payments*—(1) *General rule*.

(i) Except as provided in paragraphs (a)(2) or (f) of this section, CMS makes advance monthly payments equal to 1/12th of the annual M+C capitation rate for the payment area described in paragraph (c) of this section adjusted for such demographic risk factors as an individual's age, disability status, sex, institutional status, and other factors as it determines to be appropriate to ensure actuarial equivalence.

(ii) Effective January 1, 2000, CMS adjusts for health status as provided in § 422.256(c). When the new risk adjustment is implemented, 1/12th of the annual capitation rate for the payment area described in paragraph (c) of this section will be adjusted by the risk adjustment methodology under § 422.256(d).

(iii) Effective January 1, 2003, monthly payments may be reduced by the adjusted excess amount, as described in § 422.312(a)(2), and 80 percent of the reduction in monthly payments used to reduce the Medicare beneficiary's Part B premium, up to a total of 125 percent of Part B premium amount.

(2) * * *

(i) * * *

(B) CMS applies appropriate adjustments when establishing the rates, including risk adjustment factors. CMS also establishes annual changes in capitation rates using the methodology described in § 422.252. For 2002, a special adjustment is made to increase ESRD rates to 100 percent of estimated per capita fee-for-service expenditures and rates are adjusted for age and sex. In subsequent years, rates are adjusted for age, sex, and other factors, if appropriate.

* * * * *

18. In § 422.256, paragraph (b) is revised to read as follows:

§ 422.256 Adjustments to capitation rates and aggregate payments.

* * * * *

(b) *Adjustment for national coverage determination (NCD) services and legislative changes in benefits*. If CMS determines that the cost of furnishing an NCD service or legislative change in benefits is significant, as defined in § 422.109, CMS adjusts capitation rates or makes other payment adjustments for the next calendar year to take account of the new service or benefit. The change in payment amounts is based on an analysis by the CMS chief actuary of the costs associated with the NCD or legislative change in benefits. CMS will pay or arrange for payment of these additional costs until the adjusted payments are in effect.

* * * * *

19. In § 422.266, the following changes are made to read as follows:

A. Paragraph (a) introductory text is revised.

B. Paragraph (c) is revised.

§ 422.266 Special rules for hospice care.

(a) *Information*. An M+C organization that has a contract under subpart K of this part must inform each Medicare enrollee eligible to select hospice care under § 418.24 of this chapter about the availability of hospice care (in a manner that objectively presents all available hospice providers, including a statement of any ownership interest in a hospice held by the M+C organization or a related entity) if—

* * * * *

(c) *Payment*. (1) No payment is made to an M+C organization on behalf of a Medicare enrollee who has elected hospice care under § 418.24 of this chapter except for the portion of the payment applicable to the additional benefits described in § 422.312. This no-payment rule is effective from the first day of the month following the month of election to receive hospice care, until

the first day of the month following the month in which the election is terminated.

(2) During the time the hospice election is in effect, CMS's monthly capitation payment to the M+C organization is reduced to an amount equal to the adjusted excess amount determined under § 422.312. In addition, CMS pays through the original Medicare program (subject to the usual rules of payment)—

(i) The hospice program for hospice care furnished to the Medicare enrollee; and

(ii) The M+C organization, provider, or supplier for other Medicare-covered services to the enrollee.

Subpart G—Premiums and Cost-Sharing

20. In § 422.312, the following changes are made to read as follows:

A. Paragraph (d) is redesignated as paragraph (e).

B. A new paragraph (d) is added.

§ 422.312 Requirement for additional benefits.

* * * * *

(d) *Reduction in payments*. Beginning January 1, 2003, as a part of providing additional benefits under paragraph (b) of this section, if there is an adjusted excess amount for the plan it offers, the M+C organization—

(1) May elect to receive a reduction (not to exceed 125 percent of the standard Part B premium amount) in its payments under § 422.250(a)(1), 80 percent of which will be applied to reduce the Part B premiums of its Medicare enrollees; and

(2) Must apply the reduction uniformly to all similarly situated enrollees of the M+C plan.

* * * * *

Subpart K—Contracts with Medicare+Choice Organizations

21. A new § 422.521 is added as set forth below:

§ 422.521 Effective date of new significant regulatory requirements.

CMS will not implement, other than at the beginning of a calendar year, regulations under this part that impose a new significant cost or burden on M+C organizations or plans, unless a different effective date is required by statute.

Subpart M—Grievances, Organization Determinations and Appeals

22. In § 422.566, paragraph (c) is revised to read as set forth below:

§ 422.566 Organization determinations.

* * * * *

(c) *Who can request an organization determination*. (1) Those individuals or entities who can request an organization determination are—

(i) The enrollee (including his or her authorized representative);

(ii) Any provider that furnishes, or intends to furnish, services to the enrollee; or

(iii) The legal representative of a deceased enrollee's estate.

(2) Those who can request an expedited determination are—

(i) An enrollee (including his or her authorized representative); or

(ii) A physician (regardless of whether the physician is affiliated with the M+C organization).

23. In § 422.618, paragraph (c) is revised to read as set forth below:

§ 422.618 How an M+C organization must effectuate standard reconsidered determinations or decisions.

* * * * *

(c) *Reversals other than by the M+C organization or the independent outside entity*. (1) *General rule*. If the independent outside entity's determination is reversed in whole or in part by the ALJ, or at a higher level of appeal, the M+C organization must pay for, authorize, or provide the service under dispute as expeditiously as the enrollee's health condition requires, but no later than 60 calendar days from the date it receives notice reversing the determination. The M+C organization must inform the independent outside entity that the organization has effectuated the decision or that it has appealed the decision.

(2) *Effectuation exception when the M+C organization files an appeal with the Departmental Appeals Board*. If the M+C organization requests Departmental Appeals Board (the Board) review consistent with § 422.608, the M+C organization may await the outcome of the review before it pays for, authorizes, or provides the service under dispute. An M+C organization that files an appeal with the Board must concurrently send a copy of its appeal request and any accompanying documents to the enrollee and must notify the independent outside entity that it has requested an appeal.

24. In § 422.619, paragraph (c) is revised to read as set forth below:

§ 422.619 How an M+C organization must effectuate expedited reconsidered determinations.

* * * * *

(c) *Reversals other than by the M+C organization or the independent outside entity*. (1) *General rule*. If the independent outside entity's expedited determination is reversed in whole or in part by the ALJ, or at a higher level of appeal, the M+C organization must authorize or provide the service under dispute as expeditiously as the enrollee's health condition requires, but no later than 60 days from the date it receives notice reversing the determination. The M+C organization must inform the independent outside entity that the organization has effectuated the decision.

(2) *Effectuation exception when the M+C organization files an appeal with the Departmental Appeals Board*. If the M+C organization requests Departmental Appeals Board (the Board) review consistent with § 422.608, the M+C organization may await the outcome of the review before it authorizes or provides the service under dispute. An M+C organization that files an appeal with the Board must concurrently send a copy of its appeal request and any accompanying documents to the enrollee and must notify the independent outside entity that it has requested an appeal.

Subpart O—Intermediate Sanctions

25. In § 422.758, the following changes are made to read as set forth below:

A. The introductory text is designated as paragraph (a).

B. Paragraph (a) is redesignated as paragraph (a)(1).

C. Paragraph (b) is redesignated as paragraph (a)(2).

D. A new paragraph (b) is added.

§ 422.758 Maximum amount of civil money penalties imposed by CMS.

* * * * *

(b) If CMS makes a determination under §§ 422.752(b) and 422.756(f)(3), based on a determination under § 422.510(a)(1) that an M+C organization has terminated its contract with CMS in a manner other than described under § 422.512—$250 per Medicare enrollee from the terminated M+C plan or plans at the time the M+C organization terminated its contract, or $100,000, whichever is greater.

(Catalog of Federal Domestic Assistance Program No. 93.773, Medicare—Hospital Insurance; and Program No. 93.774, Medicare—Supplementary Medical Insurance Program)

Dated: July 16, 2002.

Thomas A. Scully,

Administrator, Centers for Medicare & Medicaid Services.

Dated: July 17, 2002.

Tommy G. Thompson,

Secretary.

[FR Doc. 02–27142 Filed 10–24–02; 8:45 am]

BILLING CODE 4120–01–P

Federal Register

Friday,
October 25, 2002

Part V

Department of the Interior

National Park Service

Draft Environmental Impact Statement for the General Management Plan for Carl Sandburg Home National Historic Site; Notice

DEPARTMENT OF INTERIOR

National Park Service

Draft Environmental Impact Statement for the General Management Plan for Carl Sandburg Home National Historic Site

AGENCY: National Park Service, Interior.

ACTION: Notice of availability of a draft environmental impact statement for the General Management Plan for Carl Sandburg Home National Historic Site, Flat Rock, North Carolina.

SUMMARY: Pursuant to section 102(2)(c) of the National Environmental Policy Act of 1969 and National Park Service policy in Director's Order Number 2 (Park Planning) and Director's Order Number 12 (Conservation Planning, Environmental Impact Analysis, and Decision-making) the National Park Service announces the availability of a Draft Environmental Impact Statement and General Management Plan (DEIS/GMP) for Carl Sandburg Home National Historic Site, Flat Rock, North Carolina.

The DEIS/GMP analyzes three action alternatives and one no-action alternative for guiding management of the park over the next 20 years. The three action alternatives incorporate various management prescriptions to ensure resource protection and quality visitor experience conditions. The no-action alternative would continue current management practices and policies into the future.

DATES: The DEIS/GMP will be available for public review from October 15, 2002, through December 15, 2002. Public meetings will be held in November 2002. Representatives of the National Park Service will be available at the public meetings to receive comments, concerns, and other input from the public related to the DEIS/GMP. Public notice of the specific dates, times, and locations of the meetings will be provided in a newsletter, announced in local media, and posted on the Internet at *http://www.nps.gov/carl/gmp_info.htm.*

ADDRESSES: Copies of the DEIS/GMP are available from the Superintendent, Carl Sandburg Home National Historic Site, 1928 Little River Road, Flat Rock, North Carolina, 28731. Public reading copies of the DEIS/GMP will also be available for review at the following locations:

- Office of the Superintendent, Carl Sandburg Home National Historic Site, 1928 Little River Road, Flat Rock, North Carolina, 28731. Telephone: 828–693–4178.
- Division of Planning and Compliance, Southeast Regional Office, National Park Service, Attention: Tim Bemisderfer, 100 Alabama Street, 1924 Building, Atlanta, Georgia 30303. Telephone: 404–562–3124 ext. 693.
- An electronic copy of DEIS/GMP is available for download in .pdf format on the Internet at *http://www.nps.gov/carl/gmp_news.htm.*

FOR FURTHER INFORMATION CONTACT: Superintendent, Carl Sandburg Home National Historic Site, 1928 Little River Road, Flat Rock, North Carolina 28731. Telephone: 828–693–4178.

SUPPLEMENTARY INFORMATION: The DEIS/GMP analyzes three action alternatives and one no-action alternative for guiding management of the park over the next 20 years. Environmental consequences anticipated from implementing the various alternatives are addressed in the DEIS/GMP. Impact topics include cultural resources, natural resources, interpretation and museum operations, park operations and administration, and quality of life and the socioeconomic environment. The action alternatives are described as follows:

In the Sandburg Center alternative, the park serves as a national and worldwide focal point for learning about Carl Sandburg. Access to Sandburg information, literature, and research would be enhanced through an extensive internet database and traveling exhibits of Sandburg related historical objects. Visitors who come to the site in person would find extraordinary opportunities to learn about the life and works of Carl Sandburg. The alternative provides high quality museum space where visitors can gain additional access to information and objects currently housed in the museum preservation facility. Additional interpretive program areas would be created by rehabilitating the interior of one or more historic structures near the main house or barn, renovating the existing visitor contract station to improve its interpretive and visitor services function, and creating a visitor center outside the current authorized boundary of the park. The Sandburg Center alternative includes a Congressionally legislated boundary expansion of 110 acres for scenic view and boundary protection and up to 5 acres for construction of a visitor center and new parking area.

The Paths of Discovery alternative encourages park managers and local government leaders to collectively identify and address common needs. The concept supplements the park's traditional high quality interpretive program and provides additional community walking opportunity by constructing a new 3/4 mile interpretive trail parallel to Little River Road and the Back Drive. In turn, the park would encourage a community partnership strategy to address common needs like additional parking and multi purpose meeting space. The Paths of Discovery alternative includes a Congressionally legislated boundary expansion of 110 acres for scenic view and boundary protection and up to 5 acres for construction of a visitor center and new parking area.

In the Connemara Lifestyle alternative, visitors would experience the site much as Carl Sandburg knew it. Park management would focus on maintaining the site's historic landscape, structures, and furnishings and providing interpretive programs on site and at local schools. Primary access to the objects and information contained in the museum collection would occur at the amin house, an expanded visitor contact station, and through the internet or other mass media formats. Opportunities for access to objects and information would be greater than existing conditions but less than the Sandburg Center or Paths of Discovery alternatives. The Connemara Lifestyle alternative includes a Congressionally legislated boundary expansion of 25 acres for scenic view and boundary protection and up to 2 acres for construction of a new parking area. The Connemara Lifestyle alternative acknowledge uncertainty about increased federal funding by taking a conservative approach to proposing new infrastructure, additional staff, and increased maintenance responsibility.

In all action alternatives, the park would continue to provide guided tours of the Sandburg residence and maintain the historic landscape at a high level of integrity. Opportunities for walking would be available and closely managed to maintain the historic character of the site. The existing amphitheater would be relocated to a less intrusive location and the trailer restroom would be replaced by an appropriately designed modern facility at the same location. Any additional property interest acquired by the park would be acquired under a willing sell/willing buyer arrangement.

Dated: September 6, 2002.

W. Thomas Brown,

Acting Regional Director, Southeast Region.

[FR Doc. 02–27244 Filed 10–24–02; 8:45 am]

BILLING CODE 4310–70–M

Reader Aids

Federal Register

Vol. 67, No. 207

Friday, October 25, 2002

CUSTOMER SERVICE AND INFORMATION

Federal Register/Code of Federal Regulations

General Information, indexes and other finding aids	**202–741–6000**
Laws	**741–6000**

Presidential Documents

Executive orders and proclamations	**741–6000**
The United States Government Manual	**741–6000**

Other Services

Electronic and on-line services (voice)	**741–6020**
Privacy Act Compilation	**741–6064**
Public Laws Update Service (numbers, dates, etc.)	**741–6043**
TTY for the deaf-and-hard-of-hearing	**741–6086**

ELECTRONIC RESEARCH

World Wide Web

Full text of the daily Federal Register, CFR and other publications is located at: **http://www.access.gpo.gov/nara**

Federal Register information and research tools, including Public Inspection List, indexes, and links to GPO Access are located at: **http://www.archives.gov/federal__register/**

E-mail

FEDREGTOC-L (Federal Register Table of Contents LISTSERV) is an open e-mail service that provides subscribers with a digital form of the Federal Register Table of Contents. The digital form of the Federal Register Table of Contents includes HTML and PDF links to the full text of each document.

To join or leave, go to **http://listserv.access.gpo.gov** and select *Online mailing list archives, FEDREGTOC-L, Join or leave the list (or change settings);* then follow the instructions.

PENS (Public Law Electronic Notification Service) is an e-mail service that notifies subscribers of recently enacted laws.

To subscribe, go to **http://hydra.gsa.gov/archives/publaws-l.html** and select *Join or leave the list* (or change settings); then follow the instructions.

FEDREGTOC-L and **PENS** are mailing lists only. We cannot respond to specific inquiries.

Reference questions. Send questions and comments about the Federal Register system to: **info@fedreg.nara.gov**

The Federal Register staff cannot interpret specific documents or regulations.

FEDERAL REGISTER PAGES AND DATE, OCTOBER

61467–61760 1
61761–61974 2
61975–62164 3
62165–62310 4
62311–62626 7
62627–62862 8
62863–63048 9
63049–63236 10
63237–63528 11
63529–63812 15
63813–64026 16
64027–64306 17
64307–64516 18
64517–64786 21
64787–65010 22
65011–65284 23
65285–65468 24
65469–65688 25

CFR PARTS AFFECTED DURING OCTOBER

At the end of each month, the Office of the Federal Register publishes separately a List of CFR Sections Affected (LSA), which lists parts and sections affected by documents published since the revision date of each title.

3 CFR

Proclamations:
7598 62161
7599 62165
7600 62167
7601 62169
7602 62863
7603 62865
7604 62867
7605 63527
7606 63811
7607 64025
7608 64027
7609 64029
7610 64031
7611 64787
7612 65281
7613 65283

Executive Orders:
12978 (See Notice of October 16, 2002) 64307
13275 62869

Administrative Orders:
Memorandums:
Memorandum of October 1, 2002 62163
Memorandum of October 16, 2002 64515
Notices:
Notice of October 16, 2002 64307

Presidential Determinations:
No. 2002-32 of September 30, 2002 62311
No. 2003-02 of October 16, 2002 65469
No. 2003-03 of October 16, 2002 65471

4 CFR

Proposed Rules:
21 61542

5 CFR

534 63049
2634 61761
2635 61761

7 CFR

1 63237
29 61467
250 65011
300 63529
301 .....61975, 62627, 63529
305 65016
319 .....63529, 64702, 65016
457 65029
723 62871
729 62871
868 62313
905 62313
906 62318
920 62320
996 63503
997 63503
998 63503
999 63503
1260 61762
1400 61468
1405 64748
1412 .....61470, 64748
1421 63506
1425 64454
1427 64454
1430 64454
1434 64454
1437 62323
1470 63242
1942 .....63019, 63536
4284 63537

Proposed Rules:
97 61545
300 61547
319 61547
800 65048
993 63568
1424 61565
1710 62652
1721 62652

8 CFR

103 61474
214 61474
217 63246

Proposed Rules:
103 .....61568, 63313
212 63313
214 .....61568, 63313
245 63313
248 .....61568, 63313
264 61568
299 63313

9 CFR

94 62171
331 61767
381 61767
417 62325

Proposed Rules:
94 64827

10 CFR

20 62872
32 62872
35 62872
50 64033
63 62628
170 64033

Proposed Rules:
30 62403
40 62403
70 62403

11 CFR

100.....65190, 65212
114.....65190

Proposed Rules:

100.....64555
104.....64555
105.....64555
108.....64555
109.....64555
110.....62410

12 CFR

8.....62872
204.....62634
226.....61769
703.....65640
704.....65640

Proposed Rules:

220.....62214
614.....64320
615.....64833

13 CFR

107.....64789
121 .....62292, 62334, 62335, 65285
123.....62335, 64517

Proposed Rules:

121.....61829

14 CFR

21.....63193
23.....62636
25 .....62339, 63050, 63250, 64309, 65473, 65475, 65477
36.....63193
39 .....61476, 61478, 61481, 61770, 61771, 61980, 61983, 61984, 61985, 62341, 62347, 63813, 63815, 63817, 63821, 64039, 64519, 64520, 64791, 64792, 64794, 64798, 65030, 65033, 65290, 65298, 65303, 65479, 65484, 65493, 65495
71 .....63823, 63824, 63825, 63826, 63827, 63828, 65035, 65497, 65498, 65499
91.....63193, 65662
95.....65036
97 .....62638, 62640, 65307, 65308
136.....65662

Proposed Rules:

25.....61836, 65048
39 .....61569, 61842, 61843, 62215, 62654, 63573, 63856, 64321, 64322, 64325, 64326, 64328, 64568, 64571, 65517, 65519
60.....65524
71 .....62410, 62412, 62413, 62414, 62415, 62416, 63858, 65323, 65324
119.....64330
121 .....61996, 62142, 62294
129.....62142
135.....62142
207.....61996
208.....61996
221.....61996
250.....61996
253.....61996
256.....61996
302.....61996
380.....61996
389.....61996
399.....61996

15 CFR

902.....63223, 64311
990.....61483

Proposed Rules:

30.....62911
50.....62657
806.....63860

16 CFR

305.....65310

17 CFR

1.....62350, 63966
3.....62350
4.....62350
9.....62350
11.....62350
15.....64522
16.....62350
17.....62350
18.....62350
19.....62350
21.....62350
31.....62350
36.....62350
37.....62350, 62873
38.....62350, 62873
39.....62350, 62873
40.....62350, 62873
41.....62350
140.....62350
145.....62350, 63538
150.....62350
170.....62350
171.....62350
190.....62350
200.....65037

Proposed Rules:

240.....65325

18 CFR

Proposed Rules:

35.....63327
154.....62918
161.....62918
250.....62918
284.....62918
375.....64835
388.....64835

19 CFR

10.....62880
163.....62880
178.....62880

Proposed Rules:

24.....62920
101.....62920
111.....63576

20 CFR

Proposed Rules:

655.....64067

21 CFR

73.....65311
101.....61773
163.....62171
173.....61783
510.....63054
520.....63054, 65038
522.....63054
558.....63054
1308.....62354

Proposed Rules:

310.....62218
314.....65448
358.....62218
882.....64835

22 CFR

22.....62884

23 CFR

450.....62370
650.....63539

Proposed Rules:

658.....65056

24 CFR

5.....65272
15.....65276
92.....61752
982.....64484

Proposed Rules:

200.....63198

25 CFR

103.....63543

Proposed Rules:

170.....62417

26 CFR

1.....64799, 65312
20.....64799
25.....64799
31.....64799
53.....64799
54.....64799
56.....64799
301.....64799, 64807

Proposed Rules:

1 .....62417, 63330, 64331, 64840, 65060
20.....63330, 64840
25 .....61997, 63330, 64840
31.....64067, 64840
53.....64840
54.....64840
56.....64840
301 .....64067, 64840, 64842

27 CFR

4.....62856
5.....62856
7.....62856
13.....62856
46.....63543
47.....64525

Proposed Rules:

4.....61998, 62860
5.....62860
7.....62860
9.....64573, 64575
13.....62860
55.....63862

28 CFR

Proposed Rules:

15.....64844
549.....63059

29 CFR

2520.....64766
2560.....64774
2570.....64774
4022.....63544
4044.....63544

30 CFR

47.....63254

Proposed Rules

6.....64196
7.....64196
18.....64196
19.....64196
20.....64196
22.....64196
23.....64196
27.....64196
33.....64196
35.....64196
36.....64196

31 CFR

1.....62886
351.....64276
357.....64276
359.....64276
360.....64276
363.....64276

Proposed Rules:

103.....64067, 64075

32 CFR

806b.....64312

33 CFR

100.....63265
110.....65038
117 .....61987, 63255, 63259, 63546, 63547, 64527, 64812, 65041
165 .....61494, 61988, 62178, 62373, 63261, 63264, 64041, 64044, 64046, 64813, 65038, 65041, 65042
334.....65313

Proposed Rules:

117.....64578, 64580
154.....63331
155.....63331
165.....64345, 65074
334.....65331, 65332

36 CFR

1201.....63267
1254.....63267

Proposed Rules:

Ch. 1 64347

37 CFR

Proposed Rules:

201.....63578

38 CFR

1.....62642
17.....62887
36.....62646, 62889
39.....62642

Proposed Rules:

3.....63352

39 CFR

111.....63549, 65500
952.....62178
957.....62178
958.....62178
960.....62178
962.....62178
964.....62178
965.....62178

Proposed Rules:

111.....63582

40 CFR

52 .....61784, 61786, 62179, 62184, 62376, 62378, 62379, 62381, 62383, 62385, 62388, 62389, 62392, 62395, 62889, 62891, 63268, 63270, 64990, 64994, 64999, 65501
61.....62395
62.....62894
63.....64498, 64742
70.....63551
81 .....61786, 62184, 64815, 65043, 65045
136.....65220
141.....65220
143.....65220
180.....63503, 65314
258.....62647
300.....61802, 65315
420.....64216
1518.....62189

Proposed Rules:

52 .....62221, 62222, 62425, 62426, 62427, 62431, 62432, 62926, 63353, 63354, 63583, 63586, 64347, 64582, 64993, 64998, 65002, 65077, 65080, 65526
60.....64014
61.....62432
81.....62222
122.....63867
131.....65256
228.....62659
271.....64594
300 .....61844, 64846, 65082
372.....63060
450.....63867

41 CFR

302–3.....65321

42 CFR

81.....62096
413.....61496
431.....65504
438.....65504
457.....61956
460.....61496, 63966
482.....61805, 61808
483.....61808
484.....61808

Proposed Rules:

409.....65672
417.....65672
422.....65672

43 CFR

2.....64527
4.....61506
268.....62618
271.....62618
2930.....61732
3430.....63565
3470.....63565
3800.....61732
6300.....61732
8340.....61732
8370.....61732
9260.....61732

Proposed Rules:

268.....62626
271.....62626
2930.....61746

44 CFR

64.....63271
65 .....63273, 63829, 63834
67 .....63275, 63837, 63849
201.....61512
206.....61512, 62896

Proposed Rules:

67 .....63358, 63360, 63867, 63872

45 CFR

Proposed Rules:

46.....62432

46 CFR

10.....64313
71.....64315
115.....64315
126.....64315
167.....64315
169.....64315
176.....64315

47 CFR

0.....63279
1.....63850
11.....65321
15.....63290
20.....63851
25.....61814
61.....63850
64.....62648
69.....63850
73 .....61515, 61816, 62399, 62400, 62648, 62649, 62650, 63290, 63852, 63853, 64048, 64049, 64552, 64553, 64817, 64818
90.....63279
95.....63279

Proposed Rules:

Ch. I.....64968
0.....65527
25.....61999
43.....65527
63.....65527
64.....62667, 65527
73 .....61572, 61845, 63873, 63874, 63875, 63876, 64080, 64598, 64853

48 CFR

201.....65509
206.....61516
207.....61516
208.....65505, 65509
212.....65512
216.....65505
217.....61516
223.....61516
226.....65512
237.....61516, 65512
239.....65509
242.....61516
245.....61516
247.....61516
251.....65509
252.....65509, 65514
1804.....62190
1833.....61519
1852.....61519
1872.....61519

Proposed Rules:

2.....64010
11.....64010
23.....64010
31.....65468
206.....62590
208.....62590
209.....62590
225.....62590
242.....62590
252.....62590, 65528

49 CFR

40.....61521
350.....61818, 63019
360.....61818
365.....61818
372.....61818
382.....61818
383.....61818
386.....61818
387.....61818
388.....61818
390.....61818, 63019
391.....61818
393.....61818, 63966
397.....62191
571.....61523, 64818
573.....64049
577.....64049
579.....63295
594.....62897
1002.....65046

Proposed Rules:

27.....61996
37.....61996
40.....61996
177.....62681
219.....61996, 63022
225.....63022
240.....63022
376.....61996
382.....61996
397.....62681
575.....62528
653.....61996
654.....61996

50 CFR

16.....62193
17 .....61531, 62897, 63968, 65414
300.....64311
600 .....61824, 62204, 64311
635.....61537, 63854
648 .....62650, 63223, 63311, 64825
654.....61990
660 .....61824, 61994, 62204, 62401, 63055, 63057, 64826, 65514
679 .....61826, 61827, 62212, 62651, 62910, 63312, 64066, 64315, 65046

Proposed Rules:

17 .....61845, 62926, 63064, 63066, 63067, 63738, 65083
300.....64853
600.....62222
660 .....62001, 63599, 64861
679.....63600

REMINDERS

The items in this list were editorially compiled as an aid to Federal Register users. Inclusion or exclusion from this list has no legal significance.

RULES GOING INTO EFFECT OCTOBER 25, 2002

CONSUMER PRODUCT SAFETY COMMISSION

Poision prevention packaging:
- Child-resistant packaging requirements—
  - Household products containing low-viscosity hydrocarbons; published 10-25-01

DEFENSE DEPARTMENT

Acquisition regulations:
- Caribbean Basin country; definition—
  - Honduras; published 10-25-02
- Contracting officer qualifications; published 10-25-02
- Enterprise software agreements; published 10-25-02
- Multiple award contracts; competition requirements for purchase of services; published 10-25-02
- Performance-based contracting; published 10-25-02

ENVIRONMENTAL PROTECTION AGENCY

Air quality implementation plans; approval and promulgation; various States:
- Arizona; published 8-26-02
- California; published 8-26-02

FEDERAL COMMUNICATIONS COMMISSION

Digital television stations; table of assignments:
- Indiana; published 10-8-02
- South Dakota; published 10-8-02

INTERIOR DEPARTMENT

Indian Affairs Bureau

Trust management reform:
- Nine CFR parts removed; published 8-26-02

COMMENTS DUE NEXT WEEK

AGRICULTURE DEPARTMENT

Agricultural Marketing Service

Oranges, grapefruit, tangerines, and tangelos grown in—
- Florida; comments due by 10-28-02; published 8-28-02 [FR 02-22008]

Plant Variety and Protection Office; fee increase; comments due by 10-31-02; published 10-1-02 [FR 02-24903]

AGRICULTURE DEPARTMENT

Commodity Credit Corporation

Loan and purchase programs:
- Bioenergy Program; comments due by 10-31-02; published 10-1-02 [FR 02-24539]

AGRICULTURE DEPARTMENT

Federal Crop Insurance Corporation

Crop insurance regulations:
- Sunflower seed; comments due by 10-29-02; published 8-30-02 [FR 02-22258]

AGRICULTURE DEPARTMENT

Rural Utilities Service

Electric loans:
- Construction and procurement; standard contract forms; revision; comments due by 10-30-02; published 7-2-02 [FR 02-16278]

ARCHITECTURAL AND TRANSPORTATION BARRIERS COMPLIANCE BOARD

Americans with Disabilities Act and Architectural Barriers Act; implementation:
- Accessibility guidelines—
  - Buildings and facilities; public rights-of-way; draft guidelines availability; comments due by 10-28-02; published 6-17-02 [FR 02-15117]

DEFENSE DEPARTMENT

Federal Acquisition Regulation (FAR):
- Commercial items—
  - Contract cost principles and procedures; comments due by 10-28-02; published 8-29-02 [FR 02-21619]
- Contract cost principles and procedures; comments due by 10-28-02; published 8-29-02 [FR 02-21620]
- Federal Prison Industries Contracts; past performance evaluation; comments due by 10-28-02; published 8-29-02 [FR 02-21616]
- Leadership in Environmental Management (E.O. 13148); comments due by 10-28-02; published 8-29-02 [FR 02-21618]
- Notification of overpayment, contract financing payments; comments due by 10-28-02; published 8-29-02 [FR 02-21617]
- Temporary emergency procurement authority; comments due by 10-29-02; published 8-30-02 [FR 02-21868]

ENVIRONMENTAL PROTECTION AGENCY

Air programs; approval and promulgation; State plans for designated facilities and pollutants:
- Ohio; comments due by 10-30-02; published 9-30-02 [FR 02-24767]

Air quality implementation plans; approval and promulgation; various States:
- Georgia; comments due by 10-28-02; published 9-27-02 [FR 02-24490]
- Texas; comments due by 10-28-02; published 9-26-02 [FR 02-24492]

Superfund program:
- National oil and hazardous substances contingency plan—
  - National priorities list update; comments due by 11-1-02; published 10-2-02 [FR 02-24642]

Superfund programs:
- National oil and hazardous substances contingency plan—
  - National priorities list update; comments due by 11-1-02; published 10-2-02 [FR 02-24641]

FEDERAL COMMUNICATIONS COMMISSION

Digital television stations; table of assignments:
- Texas; comments due by 11-1-02; published 9-23-02 [FR 02-24105]

Television broadcasting:
- Digital broadcast copy protection; comments due by 10-30-02; published 8-20-02 [FR 02-20957]

GENERAL SERVICES ADMINISTRATION

Federal Acquisition Regulation (FAR):
- Commerical items—
  - Contract cost principles and procedures; comments due by 10-28-02; published 8-29-02 [FR 02-21619]
- Contract cost principles and procedures; comments due by 10-28-02; published 8-29-02 [FR 02-21620]
- Contract financing payments; notification of overpayments; comments due by 10-28-02; published 8-29-02 [FR 02-21617]
- Federal Prison Industries Contracts; past performance evaluation; comments due by 10-28-02; published 8-29-02 [FR 02-21616]
- Leadership in Environmental Management (E.O. 13148); comments due by 10-28-02; published 8-29-02 [FR 02-21618]
- Temporary emergency procurement authority; comments due by 10-29-02; published 8-30-02 [FR 02-21868]

HEALTH AND HUMAN SERVICES DEPARTMENT

Food and Drug Administration

Administrative practice and procedure hearings
- Presiding officers at regulatory hearings; comments due by 10-29-02; published 8-15-02 [FR 02-20701]

Administrative practice and procedure:
- Presiding officers at regulatory hearings; comments due by 10-29-02; published 8-15-02 [FR 02-20700]

Human drugs:
- Total parenteral nutrition; aluminum use in large and small volume parenterals; labeling requirements; comments due by 10-28-02; published 8-12-02 [FR 02-20300]
  - Correction; comments due by 10-28-02; published 8-21-02 [FR 02-21265]

HOUSING AND URBAN DEVELOPMENT DEPARTMENT

Real Estate Settlement Procedures Act:
- Simplifying and improving process of obtaining mortgages to reduce settlement costs to consumers; comments due by 10-28-02; published 7-29-02 [FR 02-18960]

HOUSING AND URBAN DEVELOPMENT DEPARTMENT

Federal Housing Enterprise Oversight Office

Risk-based capital:

Federal Home Loan Mortgage Corporation (Freddie Mac) and Federal National Mortgage Association (Fannie Mae)—

Corrections and technical amendments; comments due by 10-29-02; published 9-30-02 [FR 02-24815]

INTERIOR DEPARTMENT

Fish and Wildlife Service

Endangered and threatened species:

Beluga sturgeon; comments due by 10-29-02; published 7-31-02 [FR 02-19250]

Critical habitat designations—

Plant species from Maui and Kahoolawe, HI; economic analysis; comments due by 11-1-02; published 10-2-02 [FR 02-25039]

JUSTICE DEPARTMENT

Immigration and Naturalization Service

Nonimmigrant classes:

Mexican or Canadian nationals; F and M nonimmigrant students in border communities; reduced course load; comments due by 10-28-02; published 8-27-02 [FR 02-21823]

NATIONAL AERONAUTICS AND SPACE ADMINISTRATION

Federal Acquisition Regulation (FAR):

Commercial items—

Contract cost principles and procedures; comments due by 10-28-02; published 8-29-02 [FR 02-21619]

Contract cost principles and procedures; comments due by 10-28-02; published 8-29-02 [FR 02-21620]

Contract financing payments; notification of overpayments; comments due by 10-28-02; published 8-29-02 [FR 02-21617]

Federal Prison Industries Contracts; past performance evaluation; comments due by 10-28-02; published 8-29-02 [FR 02-21616]

Leadership in Environmental Management (E.O. 13148); comments due by 10-28-02; published 8-29-02 [FR 02-21618]

Temporary emergency procurement authority; comments due by 10-29-02; published 8-30-02 [FR 02-21868]

NATIONAL SCIENCE FOUNDATION

Antarctic Science, Tourism, and Conservation Act of 1996; implementation:

Antarctic meteorites; comments due by 10-28-02; published 8-27-02 [FR 02-21621]

SMALL BUSINESS ADMINISTRATION

Small business size standards:

Tour operators; comments due by 11-1-02; published 10-2-02 [FR 02-24919]

SOCIAL SECURITY ADMINISTRATION

Social security benefits:

World War II veterans; special benefits; comments due by 10-29-02; published 8-30-02 [FR 02-21892]

TRANSPORTATION DEPARTMENT

Coast Guard

Ports and waterways safety:

Strait of Juan de Fuca and adjacent waters, WA; traffic separation schemes; comments due by 10-28-02; published 8-27-02 [FR 02-21785]

TRANSPORTATION DEPARTMENT

Federal Aviation Administration

Air carrier certification and operations:

Incidents involving animals during air transport; reports by carriers; comments due by 10-28-02; published 9-27-02 [FR 02-24127]

Airworthiness directives:

Boeing; comments due by 10-29-02; published 8-30-02 [FR 02-22007]

Cirrus Design; comments due by 11-1-02; published 8-29-02 [FR 02-22001]

Learjet; comments due by 10-28-02; published 8-28-02 [FR 02-21707]

McDonnell Douglas; comments due by 10-29-02; published 8-30-02 [FR 02-22127]

REVO, Incorporated; comments due by 11-1-02; published 10-17-02 [FR 02-26371]

Airworthiness standards:

Special conditions—

CenTex Aerospace, Inc., Beech Model A36 airplane; comments due by 10-28-02; published 9-27-02 [FR 02-24667]

Cessna Model 680 Sovereign airplane; comments due by 10-28-02; published 9-27-02 [FR 02-24668]

Class D airspace; comments due by 10-28-02; published 9-27-02 [FR 02-24128]

Class D and Class E airspace; comments due by 10-30-02; published 9-19-02 [FR 02-23830]

Class E airspace; comments due by 10-30-02; published 9-19-02 [FR 02-23829]

Commercial space transportation:

Launch licensing and safety requirements; comments due by 10-28-02; published 7-30-02 [FR 02-18340]

TRANSPORTATION DEPARTMENT

Federal Motor Carrier Safety Administration

Motor carrier safety standards:

Registration enforcement; comments due by 10-28-02; published 8-28-02 [FR 02-21917]

TREASURY DEPARTMENT

Internal Revenue Service

Income taxes:

Dual consolidated loss recapture events; comments due by 10-30-02; published 8-1-02 [FR 02-19237]

Qualified cost sharing arrangements; compensatory stock options; comments due by 10-28-02; published 7-29-02 [FR 02-19126]

LIST OF PUBLIC LAWS

This is a continuing list of public bills from the current session of Congress which have become Federal laws. It may be used in conjunction with ''P L U S'' (Public Laws Update Service) on 202–741–6043. This list is also available online at *http://www.nara.gov/fedreg/plawcurr.html*.

The text of laws is not published in the **Federal Register** but may be ordered in ''slip law'' (individual pamphlet) form from the Superintendent of Documents, U.S. Government Printing Office, Washington, DC 20402 (phone, 202–512–1808). The text will also be made available on the Internet from GPO Access at *http://www.access.gpo.gov/nara/nara005.html*. Some laws may not yet be available.

H.R. 2121/P.L. 107–246

Russian Democracy Act of 2002 (Oct. 23, 2002; 116 Stat. 1511)

H.R. 4085/P.L. 107–247

Veterans' Compensation Cost-of-Living Act of 2002 (Oct. 23, 2002; 116 Stat. 1517)

H.R. 5010/P.L. 107–248

Department of Defense Appropriations Act, 2003 (Oct. 23, 2002; 116 Stat. 1519)

H.R. 5011/P.L. 107–249

Military Construction Appropriation Act, 2003 (Oct. 23, 2002; 116 Stat. 1578)

Last List October 23, 2002

Public Laws Electronic Notification Service (PENS)

PENS is a free electronic mail notification service of newly enacted public laws. To subscribe, go to *http://hydra.gsa.gov/archives/publaws-l.html* or send E-mail to **listserv@listserv.gsa.gov** with the following text message:

SUBSCRIBE PUBLAWS-L Your Name.

Note: This service is strictly for E-mail notification of new laws. The text of laws is not available through this service. **PENS** cannot respond to specific inquiries sent to this address.