Federal Register

Friday,
November 8, 2002

Part II

Environmental Protection Agency

40 CFR Parts 89 et al.

Control of Emissions From Nonroad Large Spark-Ignition Engines, and Recreational Engines (Marine and Land-Based); Final Rule

ENVIRONMENTAL PROTECTION AGENCY

40 CFR Parts 89, 90, 91, 94, 1048, 1051, 1065, and 1068

[AMS–FRL–7380–2]

RIN 2060–AI11

Control of Emissions From Nonroad Large Spark-Ignition Engines, and Recreational Engines (Marine and Land-Based)

AGENCY: Environmental Protection Agency (EPA).

ACTION: Final rule.

SUMMARY: In this action, we are adopting emission standards for several groups of nonroad engines that have not been subject to EPA emission standards. These engines are large spark-ignition engines such as those used in forklifts and airport ground-service equipment; recreational vehicles using spark-ignition engines such as off-highway motorcycles, all-terrain vehicles, and snowmobiles; and recreational marine diesel engines. Nationwide, these engines and vehicles cause or contribute to ozone, carbon-monoxide, and particulate-matter nonattainment, as well as other types of pollution impacting human health and welfare.

We expect that manufacturers will be able to maintain or even improve the performance of their products when producing engines and equipment meeting the new standards. Many engines will substantially reduce their fuel consumption, partially or completely offsetting any costs associated with the emission standards. Overall, the gasoline-equivalent fuel savings associated with the anticipated changes in technology resulting from this rule are estimated to be about 800 million gallons per year once the program is fully phased in. Health and environmental benefits from the controls included in today's rule are estimated to be approximately $8 billion per year once the controls are fully phased in. There are also several provisions to address the unique limitations of small-volume manufacturers.

DATES: This final rule is effective January 7, 2003.

The incorporation by reference of certain publications listed in this regulation is approved by the Director of the Federal Register as of January 7, 2003.

ADDRESSES: Materials relevant to this rulemaking are contained in Public Docket Numbers A–98–01 and A–2000–01 at the following address: EPA Docket Center (EPA/DC), Public Reading Room, Room B102, EPA West Building, 1301 Constitution Avenue, NW., Washington DC. The EPA Docket Center Public Reading Room is open from 8:30 a.m. to 4:30 p.m., Monday through Friday, except on government holidays. You can reach the Reading Room by telephone at (202) 566–1742, and by facsimile at (202) 566–1741. The telephone number for the Air Docket is (202) 566–1742. You may be charged a reasonable fee for photocopying docket materials, as provided in 40 CFR part 2.

For further information on electronic availability of this action, see **SUPPLEMENTARY INFORMATION** below.

FOR FURTHER INFORMATION CONTACT: U.S. EPA, Office of Transportation and Air Quality, Assessment and Standards Division hotline, (734) 214–4636, *asdinfo@epa.gov;* Alan Staut, (734) 214–4805.

SUPPLEMENTARY INFORMATION:

Regulated Entities

This action will affect companies that manufacture or introduce into commerce any of the engines or vehicles subject to emission standards. These include: spark-ignition industrial engines such as those used in forklifts and compressors; recreational vehicles such as off-highway motorcycles, all-terrain vehicles, and snowmobiles; and recreational marine diesel engines. This action will also affect companies buying engines for installation in nonroad equipment. There are also requirements that apply to those who rebuild any of the affected nonroad engines. Regulated categories and entities include:

Category	NAICS Codes [a]	SIC Codes [b]	Examples of potentially regulated entities
Industry	333618	3519	Manufacturers of new nonroad spark-ignition engines, new marine engines.
Industry	333111	3523	Manufacturers of farm equipment.
Industry	333112	3531	Manufacturers of construction equipment, recreational marine vessels.
Industry	333924	3537	Manufacturers of industrial trucks.
Industry	811310	7699	Engine repair and maintenance.
Industry	336991		Motorcycle manufacturers.
Industry	336999		Snowmobiles and all-terrain vehicle manufacturers.
Industry	421110		Independent Commercial Importers of Vehicles and Parts.

[a] North American Industry Classification System (NAICS)
[b] Standard Industrial Classification (SIC) system code.

This list is not intended to be exhaustive, but rather provides a guide regarding entities likely to be regulated by this action. To determine whether this action regulates particular activities, you should carefully examine the regulations. You may direct questions regarding the applicability of this action to the person listed in **FOR FURTHER INFORMATION CONTACT**.

Obtaining Electronic Copies of the Regulatory Documents

The preamble, regulatory language, Final Regulatory Support Document, and other rule documents are also available electronically from the EPA Internet web site. This service is free of charge, except for any cost incurred for internet connectivity. The electronic version of this final rule is made available on the day of publication on the primary web site listed below. The EPA Office of Transportation and Air Quality also publishes **Federal Register** notices and related documents on the secondary web site listed below.

1. *http://www.epa.gov/docs/fedrgstr/EPA-AIR/* (either select desired date or use Search feature)
2. *http://www.epa.gov/otaq/* (look in What's New or under the specific rulemaking topic)

Please note that due to differences between the software used to develop the documents and the software into which the document may be downloaded, format changes may occur.

Table of Contents

I. Introduction
A. Overview
B. How Is This Document Organized?
C. What Categories of Vehicles and Engines Are Covered in This Final Rule?
D. What Requirements Are We Adopting?
E. Why Is EPA Taking This Action?

II. Nonroad: General Provisions
A. Scope of Application
B. Emission Standards and Testing
C. Demonstrating Compliance
D. Other Concepts
III. Recreational Vehicles and Engines
A. Overview
B. Engines Covered by This Rule
C. Emission Standards
D. Testing Requirements
E. Special Compliance Provisions
F. Technological Feasibility of the Standards
IV. Permeation Emission Control
A. Overview
B. Vehicles Covered by This Provision
C. Permeation Emission Standards
D. Testing Requirements
E. Special Compliance Provisions
F. Technological Feasibility
V. Large Spark-ignition (SI) Engines
A. Overview
B. Large SI Engines Covered by This Rule
C. Emission Standards
D. Testing Requirements and Supplemental Emission Standards
E. Special Compliance Provisions
F. Technological Feasibility of the Standards
VI. Recreational Marine Diesel Engines
A. Overview
B. Engines Covered by This Rule
C. Emission Standards for Recreational Marine Diesel Engines
D. Testing Equipment and Procedures
E. Special Compliance Provisions
F. Technical Amendments
G. Technological Feasibility
VII. General Nonroad Compliance Provisions
A. Miscellaneous Provisions (Part 1068, Subpart A)
B. Prohibited Acts and Related Requirements (Part 1068, Subpart B)
C. Exemptions (Part 1068, Subpart C)
D. Imports (Part 1068, Subpart D)
E. Selective Enforcement Audit (Part 1068, Subpart E)
F. Defect Reporting and Recall (Part 1068, Subpart F)
G. Hearings (Part 1068, Subpart G)
VIII. General Test Procedures
A. General Provisions
B. Laboratory Testing Equipment
C. Laboratory Testing Procedures
D. Other Testing Procedures
IX. Projected Impacts
A. Environmental Impact
B. Cost Estimates
C. Cost Per Ton of Emissions Reduced
D. Economic Impact Analysis
E. Do the Benefits Outweigh the Costs of the Standards?
X. Public Participation
XI. Statutory and Executive Order Reviews
A. Executive Order 12866: Regulatory Planning and Review
B. Paperwork Reduction Act
C. Regulatory Flexibility Act (RFA), as Amended by the Small Business Regulatory Enforcement Fairness Act of 1996 (SBREFA), 5 U.S.C. 601 *et seq.*
D. Unfunded Mandates Reform Act
E. Executive Order 13132: Federalism
F. Executive Order 13175: Consultation and Coordination With Indian Tribal Governments
G. Executive Order 13045: Protection of Children From Environmental Health and Safety Risks
H. Executive Order 13211: Actions That Significantly Affect Energy Supply, Distribution, or Use
I. National Technology Transfer and Advancement Act
J. Congressional Review Act
K. Plain Language

I. Introduction

A. Overview

Emissions from the engines regulated in this rule contribute to serious air-pollution problems, and will continue to do so in the future absent regulation. These air pollution problems include exposure to carbon monoxide (CO), ground-level ozone, and particulate matter (PM), which can cause serious health problems, including premature mortality and respiratory problems. Fine PM has also been associated with cardiovascular problems, such as heart rate variability and changes in fibrinogen (a blood clotting factor) levels, and hospital admissions and mortality related to cardiovascular diseases. These emissions also contribute to other serious environmental problems, including visibility impairment and ecosystem damage. In addition, many of the hydrocarbon (HC) pollutants emitted by these engines are air toxics.

This rule addresses these air-pollution concerns by adopting national emission standards for several types of nonroad engines and vehicles that are currently unregulated. These include large spark-ignition engines used in industrial and commercial applications such as those used in forklifts and airport equipment; recreational spark-ignition vehicles such as off-highway motorcycles, all-terrain vehicles, and snowmobiles; and recreational marine diesel engines.[1] These new standards are a continuation of the process of establishing emission standards for nonroad engines and vehicles, under Clean Air Act section 213(a).

We conducted a study of emissions from nonroad engines, vehicles, and equipment in 1991, as directed by the Clean Air Act, section 213(a) (42 U.S.C. 7547(a)). Based on the results of that study, we determined that emissions of oxides of nitrogen (NO_X), volatile organic compounds, and CO from nonroad engines and equipment contribute significantly to ozone and CO concentrations in more than one nonattainment area (59 FR 31306, June 17, 1994). Given this determination, section 213(a)(3) of the Act requires us to establish (and from time to time revise) emission standards for those classes or categories of new nonroad engines, vehicles, and equipment that in our judgment cause or contribute to such air pollution. We have determined that the engines covered by this final rule cause or contribute to such air pollution (see the final finding for recreational vehicles and nonroad spark-ignition engines over 19 kW published on December 7, 2000 (65 FR 76790), the final rule for marine diesel engines published on December 29, 1999 (64 FR 73301)[2], Section II of the preamble to the proposed rule (66 FR 51098, October 5, 2001), this preamble, and the Final Regulatory Support Document).

Where we determine that other emissions from new nonroad engines, vehicles, or equipment significantly contribute to air pollution that may reasonably be anticipated to endanger public health or welfare, section 213(a)(4) of the Act authorizes EPA to establish (and from time to time revise) emission standards from those classes or categories of new nonroad engines, vehicles, and equipment that cause or contribute to such air pollution. Pursuant to section 213(a)(4) of the Act, we are finalizing a finding that emissions from new nonroad engines, including construction equipment, farm tractors, boats, locomotives, marine engines, nonroad spark-ignition engines over 19 kW, recreational vehicles (including off-highway motorcycles, all-terrain-vehicles, and snowmobiles), significantly contribute to regional haze and visibility impairment in federal Class I areas and where people live, work and recreate. These engines, particularly recreational vehicles such as snowmobiles, are significant emitters of pollutants that are known to impair visibility in federal Class I areas (see Section I.E of this preamble and the Final Regulatory Support Document). We have also determined that engines covered by this final rule, particularly recreational vehicles including snowmobiles, contribute to such pollution. Thus, we are finalizing HC standards for snowmobiles to reduce PM-related visibility impairment.

[1] Diesel-cycle engines, referred to simply as ''diesel engines'' in this document, may also be referred to as compression-ignition (or CI) engines. These engines typically operate on diesel fuel, but other fuels may also be used. Otto-cycle engines (referred to here as spark-ignition or SI engines) typically operate on gasoline, liquefied petroleum gas, or natural gas.

[2] This rule also found that PM emissions from marine diesel engines contribute to PM nonattainment.

B. How Is This Document Organized?

This final rule covers engines and vehicles that vary in design and use, and many readers may be interested in only one or two of the applications. We have grouped engines by common application (for example, recreational land-based engines, marine diesel recreational engines, large spark-ignition engines used in commercial applications). This document is organized in a way that allows each reader to focus on the applications of particular interest.

Section II describes general provisions that are relevant to all of the nonroad engines covered by this rulemaking. Section III through VI present information specific to each of the affected nonroad applications, including standards, effective dates, testing information, and other specific requirements.

Sections VII and VIII describe a wide range of compliance and testing provisions that apply generally to engines and vehicles from all the nonroad engine and vehicle categories included in this rulemaking. Several of these provisions apply not only to manufacturers, but also to equipment manufacturers installing certified engines, remanufacturing facilities, operators, and others. Therefore, all affected parties should read the information contained in these sections.

Section IX summarizes the projected impacts and a discussion of the benefits of this rule. Finally, Sections X and XI contain information about public participation and various administrative requirements.

The remainder of this section summarizes the new requirements and the air quality need for the rulemaking.

C. What Categories of Vehicles and Engines Are Covered in This Final Rule?

This final rule establishes regulatory programs for new nonroad vehicles and engines not yet subject to EPA emission standards, including the following engines:

- Land-based spark-ignition recreational engines, including those used in snowmobiles, off-highway motorcycles, and all-terrain vehicles. For the purpose of this rule, we are calling this group of engines ''recreational vehicles,'' even though all-terrain vehicles can be used for commercial purposes.
- Land-based spark-ignition engines rated over 19 kW, including engines used in forklifts, generators, airport baggage tow trucks, and various farm, construction, and industrial equipment. This category also includes auxiliary marine engines, but does not include propulsion marine engines or engines used in recreational vehicles. For purposes of this rule, we refer to this category as ''Large SI engines.''
- Recreational marine diesel engines.

This final rule covers new engines that are used in the United States, whether they are made domestically or imported.[3] A more detailed discussion of the meaning of the terms ''new'' and ''imported'' that help define the scope of application of this rule is in Section II of this preamble.

D. What Requirements Are We Adopting?

The fundamental requirement for nonroad engines and vehicles is meeting EPA's emission standards. Section 213(a)(3) of the Act requires that standards to control emissions related to ozone or CO achieve the greatest degree of emission reduction achievable through the application of technology that will be available, giving appropriate consideration to cost, noise, energy, and safety factors. Section 213 (a)(4) of the Act requires that standards for emissions related to other air pollution problems be appropriate and take into account costs, noise, safety, and energy impacts of applying technology that will be available. Other requirements such as applying for certification, labeling engines, and meeting warranty requirements define a process for implementing the program in an effective way.

With regard to Large SI engines, we are adopting a two-phase program. The first phase of the standards go into effect in 2004 and are the same as those adopted in October 1998 by the California Air Resources Board for 2004. These standards will reduce combined HC and NO_X emissions by nearly 75 percent, based on emission measurements during steady-state operation. In 2007, we supplement these standards by setting limits that will require optimizing the same technologies and will base emission measurements on a transient test cycle. New requirements for evaporative emissions and engine diagnostics also start in 2007.

For recreational vehicles, we are adopting separate emission standards for snowmobiles, off-highway motorcycles, and all-terrain vehicles. For snowmobiles, we are adopting a first phase of standards for HC and CO emissions based on a mixture of technologies ranging from clean carburetion and engine modifications to direct fuel injection two-stroke technology and some conversion to four-stroke engines, and second and third phases of emission standards for snowmobiles that will involve significant use of direct fuel injection two-stroke technology and conversion to four-stroke engines. For off highway motorcycles and all-terrain vehicles, we are adopting standards based mainly on moving these engines from two-stroke to four-stroke technology with the use of some secondary air injection. We are also adopting requirements to address permeation emissions from all three types of recreational vehicles.

The emission standards for recreational marine diesel engines are comparable to those already established for commercial marine diesel engines. Manufacturers generally have additional time to meet emission standards for the recreational models and several specific rulemaking provisions are tailored to the unique characteristics of these engines.

We are also adopting more stringent voluntary Blue Sky Series emission standards for recreational marine diesel engines and Large SI engines. Blue Sky Series emission standards are more stringent than the mandatory emission standards and are intended to encourage the introduction and more widespread use of low-emission technologies. Manufacturers may be motivated to exceed emission requirements either to gain early experience with certain technologies or as a response to market demand or local government programs. For recreational vehicles, we are not adopting voluntary standards but rather providing consumers with consumer labeling, which will provide information and opportunity to buy lower-emissions models.

We have also conducted extensive analysis on the costs and benefits of this rulemaking effort, with specific details found in Section IX below and in the Final Regulatory Support Document. In summary, we estimate that annually, the cost to manufacturers is approximately $210 million, the social gain is approximately $550 million, and the quantified benefits are approximately $8 billion. Social gain is defined as the economic cost of the rule minus the estimated fuels savings. Quantified benefits reflect the health benefits primarily associated with particulate matter controls.

E. Why Is EPA Taking This Action?

There are important public health and welfare reasons supporting the new

[3] For this final rule, we consider the United States to include the States, the District of Columbia, the Commonwealth of Puerto Rico, the Commonwealth of the Northern Mariana Islands, Guam, American Samoa, the U.S. Virgin Islands, and the Trust Territory of the Pacific Islands.

emission standards. As described below and in the Final Regulatory Support Document, these engines contribute to air pollution that causes public health and welfare problems.

Nationwide, these engines and vehicles are a significant source of mobile source air pollution. As described below, of all mobile source emissions in 2000 they accounted for about 9 percent of HC emissions, 4 percent of CO emissions, 3 percent of NO_X emissions, and 2 percent of direct PM emissions. The emissions from Large SI engines contributed 2 to 3 percent of the HC, NO_X, and CO emissions from mobile sources in 2000. Recreational vehicles by themselves account for about 6 percent of national mobile source HC emissions and about 2 percent of national mobile source CO emissions. By reducing these emissions, the standards will aid states facing ozone and CO air quality problems, which can cause a range of adverse health effects, especially in terms of respiratory disease and related illnesses. The engine categories subject to this rule contribute to regional haze and visibility impairment in Class I areas and near where people live, work and recreate. Within national parks, emissions from snowmobiles in particular contribute to ambient concentrations of fine PM, a leading cause of visibility impairment. States are required to develop plans to address visibility impairment in national parks, and the reductions required in this rule would assist states in those efforts.

The standards will also help reduce acute exposure to CO and air toxics for forklift operators, equipment users or riders, national and state park attendants, and other people who may be at particular risk because they operate or work or are otherwise in close proximity to this equipment due to their occupation or as riders. Emissions from these vehicles and equipment can be very high on a per-engine basis. In addition, the equipment using these engines (especially forklifts) is often operated in enclosed areas. Similarly, exposure to CO and air toxics can be intensified for snowmobile riders who follow a group of other riders along a trail, since those riders are exposed to the emissions of all the other snowmobiles riding ahead.

When the emission standards are fully implemented in 2030, we expect a 75-percent reduction in HC emissions, 82-percent reduction in NO_X emissions, and 61-percent reduction in CO emissions, and a 60-percent reduction in direct PM emissions from these engines, equipment, and vehicles (see Section IX below). These emission reductions will reduce ambient concentrations of CO, ozone, and PM fine; fine particles are a public health concern and contributes to visibility impairment. The standards will also reduce exposure for people who operate or who work with or are otherwise in close proximity to these engines and vehicles.

We believe technology can be applied to these engines that will reduce emissions of these harmful pollutants. Manufacturers can reduce two-stroke engine emissions by improving fuel management and calibration. This can be achieved by making improvements to carbureted fuel systems and/or converting to electronic and direct fuel injection. In addition, many of the existing two-stroke engines in these categories can be converted to four-stroke technology. Finally, there are modifications that can be made to four-stroke engines, often short of requiring catalysts, that can reduce emissions even further.

1. Health and Welfare Effects

Exposure to CO, ground-level ozone, and PM can cause serious respiratory problems, including premature mortality and respiratory problems. Fine PM has also been associated with cardiovascular problems, such as heart rate variability and fibrinogen (a blood clotting factor) levels, and hospital admissions and mortality related to cardiovascular diseases. These emissions also contribute to other serious environmental problems, including visibility impairment and ecosystem damage. In addition, some of the HC pollutants emitted by these engines are air toxics. (The health and welfare effects are described in more detail in the Final Regulatory Support Document.)

CO enters the bloodstream through the lungs and reduces the delivery of oxygen to the body's organs and tissues. The health threat from CO is most serious for those who suffer from cardiovascular disease, particularly those with angina or peripheral vascular disease. Healthy individuals also are affected, but only at higher CO levels. Exposure to elevated CO levels is associated with impairment of visual perception, work capacity, manual dexterity, learning ability and performance of complex tasks.

Exposures to ozone has been linked to increased hospital admissions and emergency room visits for respiratory problems.[4] Repeated exposure to ozone can increase susceptibility to respiratory infection and lung inflammation. It can aggravate preexisting respiratory diseases, such as asthma. Prolonged (6 to 8 hours), repeated exposure to ozone can cause inflammation of the lung, impairment of lung defense mechanisms, and possibly irreversible changes in lung structure, which over time could lead to premature aging of the lungs and/or chronic respiratory illnesses such as emphysema and chronic bronchitis. Children, the elderly, asthmatics and outdoor workers are most at risk from ozone exposure. Evidence also exists of a possible relationship between daily increases in ozone levels and increases in daily mortality levels. In addition to human health effects, ozone adversely affects crop yield, vegetation and forest growth, and the durability of materials.

PM, like ozone, has been linked to a range of serious respiratory health problems.[5] The key health effects associated with ambient particulate matter include premature mortality, aggravation of respiratory and cardiovascular disease (as indicated by increased hospital admissions and emergency room visits, school absences, work loss days, and restricted activity days), aggravated asthma, acute respiratory symptoms, including aggravated coughing and difficult or painful breathing, chronic bronchitis, and decreased lung function that can be experienced as shortness of breath. Observable human non-cancer health effects associated with exposure to diesel PM include some of the same health effects reported for ambient PM such as respiratory symptoms (cough, labored breathing, chest tightness, wheezing), and chronic respiratory disease (cough, phlegm, chronic bronchitis and suggestive evidence for decreases in pulmonary function). Symptoms of immunological effects such as wheezing and increased allergenicity are also seen.

PM also causes adverse impacts to the environment. Fine PM is the major cause of reduced visibility in parts of the United States, including many of our national parks and in places where people live and work. Visibility effects are manifest in two principal ways: (1) as local impairment (for example,

[4] U.S. EPA Review of the National Ambient Air Quality Standards for Ozone: Policy Assessment of Scientific and Technical Information OAQPS Staff Paper. EPA–452/R–96–007. June 1996. A copy of this document can be found in Docket A–99–06, Document II–A–22.

[5] U.S. EPA Review of the National Ambient Air Quality Standards for Particulate Matter: Policy Assessment of Scientific and Technical Information OAQPS Staff Paper. EPA–452/R–96–013. 1996. Docket Number A–99–06, Documents Nos. II–A–18, 19, 20, and 23. The particulate matter air quality criteria documents are also available at *http://www.epa.gov/ncea/partmatt.htm.*

localized hazes and plumes) and (2) as regional haze. The emissions from engines covered by this rule can contribute to both types of visibility impairment.

The engines covered by this rule also emit air toxics that are known or suspected human or animal carcinogens, or have serious non-cancer health effects. These include benzene, 1,3-butadiene, formaldehyde, acetaldehyde, and acrolein.

2. What Is the Inventory Contribution From the Nonroad Engines and Vehicles That Would Be Subject to This Rule?

The contribution of emissions from the nonroad engines and vehicles that will be subject to this final rule to the national inventories of pollutants is considerable. To estimate nonroad engine and vehicle emission contributions, we used the latest version of our NONROAD emissions model, updated with information received during the public comment period. This model computes nationwide, state, and county emission levels for a wide variety of nonroad engines, and uses information on emission rates, operating data, and population to determine annual emission levels of various pollutants. A more detailed description of the model and our estimation methodology can be found in the Chapter 6 of the Final Regulatory Support Document.

Baseline emission inventory estimates for the year 2000 for the categories of engines and vehicles covered by this rule are summarized in Table I.E–1. This table shows the relative contributions of the different mobile source categories to the overall national mobile source inventory. Of the total emissions from mobile sources, the categories of engines and vehicles covered by this rule contribute about 9 percent, 3 percent, 4 percent, and 2 percent of HC, NO_X, CO, and PM emissions, respectively, in the year 2000. The results for Large SI engines indicate they contribute approximately 2 to 3 percent to HC, NO_X, and CO emissions from mobile sources. The results for land-based recreational engines reflect the impact of the significantly different emissions characteristics of two-stroke engines. These engines are estimated to contribute about 6 percent of HC emissions and 2 percent of CO from mobile sources. Recreational marine diesel engines contribute less than 1 percent to NO_X mobile source inventories. When only nonroad emissions are considered, the engines and vehicles that will be subject to the standards account for a larger share.

Our draft emission projections for 2020 and 2030 for the nonroad engines and vehicles subject to this rule show that emissions from these categories are expected to increase over time if left uncontrolled. The projections for 2020 and 2030 are summarized in Tables I.E–2 and I.E–3, respectively. The projections for 2020 and 2030 indicate that the categories of engines and vehicles covered by this rule are expected to contribute approximately 25 percent, 10 percent, 5 percent, and 5 percent of mobile source HC, NO_X, CO, and PM emissions, respectively, if left uncontrolled. Engine population growth and the effects of other regulatory control programs are factored into these projections. The relative importance of uncontrolled nonroad engines in 2020 and 2030 is higher than the projections for 2000 because there are already emission-control programs in place for the other categories of mobile sources which are expected to reduce their emission levels. The effectiveness of all control programs is offset by the anticipated growth in engine populations.

Regarding PM specifically, this information and information in Section I.3(ii) below show that the engines being regulated in this rule, snowmobiles and other recreational vehicles in particular, contribute to PM concentrations that may reasonably be anticipated to endanger public health and welfare both because of the health effects associated with PM and because of the effects on visibility discussed below.

TABLE I.E–1.—MODELED ANNUAL EMISSION LEVELS FOR MOBILE SOURCE CATEGORIES IN 2000

[Thousand short tons]

Category	NO_X		HC		CO		PM	
	1000 tons	Percent of mobile source	1000 tons	Percent of mobile source	1000 tons	Percent of mobile source	1000 tons	Percent of mobile source
Total for engines subject to this final rule*	351	2.6	645	8.8	2,860	3.8	14.6	2.1
Highway Motorcycles	8	0.1	84	1.2	331	0.4	0.4	0.1
Nonroad Industrial SI >19 kW*	308	2.3	226	3.1	1,734	2.3	1.6	0.2
Recreational SI*	5	0.0	418	5.7	1,120	1.5	12.0	1.7
Recreational Marine Diesel*	38	0.3	1	0.0	6	0.0	1	0.1
Marine SI Evap	0	0.0	100	1.4	0	0.0	0	0.0
Marine SI Exhaust	32	0.2	708	9.7	2,144	2.8	38	5.4
Nonroad SI <19 kW	106	0.8	1,460	20.0	18,359	24.3	50	7.1
Nonroad diesel	2,625	19.5	316	4.3	1,217	1.6	253	35.9
Commercial Marine Diesel	963	7.2	30	0.4	127	0.2	41	5.8
Locomotive	1,192	8.9	47	0.6	119	0.2	30	4.3
Total Nonroad	5,269	39	3,305	45	24,826	33	427	60
Total Highway	7,981	59	3,811	52	49,813	66	240	34
Aircraft	178	1	183	3	1,017	1	39	6
Total Mobile Sources	13,428	100	7,300	100	75,656	100	706	100
Total Man-Made Sources	24,532	.....	18,246	.....	97,735	.....	3,102	.....
Mobile Source percent of Total Man-Made Sources	55	.....	40	.....	77	.....	23	

TABLE I.E–2.—MODELED ANNUAL BASELINE EMISSION LEVELS FOR MOBILE SOURCE CATEGORIES IN 2020

[thousand short tons]

Category	NO_X		HC		CO		PM	
	1000 tons	Percent of mobile source	1000 tons	Percent of mobile source	1000 tons	Percent of mobile source	1000 tons	Percent of mobile source
Total for engines subject to this final rule*	547	8.8	1,305	24.1	4,866	5.6	34.1	5.2
Highway Motorcycles	14	0.2	142	2.6	572	0.7	0.8	0.1
Nonroad Industrial SI > 19 kW*	472	7.6	318	5.9	2,336	2.7	2.3	0.4
Recreational SI*	14	0.2	985	18.2	2,521	2.9	30.2	4.6
Recreational Marine Diesel*	61	1.0	2	0.0	9	0.0	1.6	0.2
Marine SI Evap	0	0.0	114	2.1	0	0.0	0	0.0
Marine SI Exhaust	58	0.9	284	5.2	1,985	2.3	28	4.3
Nonroad SI < 19 Kw	106	1.7	986	18.2	27,352	31.7	77	11.8
Nonroad Diesel	1,791	28.8	142	2.6	1,462	1.7	261	40.0
Commercial Marine Diesel	819	13.2	35	0.6	160	0.2	46	7.0
Locomotive	611	9.8	35	0.6	119	0.1	21	3.2
Total Nonroad	3,932	63	2,901	54	35,944	42	467	71
Total Highway	2,050	33	2,276	42	48,906	56	145	22
Aircraft	232	4	238	4	1,387	2	43	7
Total Mobile Sources	6,214	100	5,415	100	86,237	100	655	100
Total Man-Made Sources	16,190	.....	15,475	.....	109,905	.....	3,039	.....
Mobile Source percent of Total Man-Made Sources	38	.....	35	.....	79	.....	22	.....

TABLE I.E–3.—MODELED ANNUAL EMISSION LEVELS FOR MOBILE SOURCE CATEGORIES IN 2030

[Thousand short tons]

Category	NO_X		HC		CO		PM	
	1000 tons	Percent of mobile source	1000 tons	Percent of mobile source	1000 tons	Percent of mobile source	1000 tons	Percent of mobile source
Total for engines subject to this final rule*	640	10.0	1,411	23.5	5,363	5.4	36.5	4.8
Highway Motorcycles	17	0.3	172	2.9	693	0.7	1.0	0.1
Nonroad Industrial SI > 19 kW*	553	8.6	371	6.2	2,703	2.7	2.7	0.4
Recreational SI*	15	0.2	1,038	17.3	2,649	2.7	31.9	4.2
Recreational Marine Diesel*	72	1.1	2	0.0	11	0.0	1.9	0.3
Marine SI Evap	0	0.0	122	2.0	0	0.0	0	0.0
Marine SI Exhaust	64	1.0	269	4.5	2,083	2.1	29	3.8
Nonroad SI < 19 kW	126	2.0	1,200	20.0	32,310	32.4	93	12.3
Nonroad Diesel	1,994	31.0	158	2.6	1,727	1.7	306	40.4
Commercial Marine Diesel	1,166	18.1	52	0.9	198	0.2	74	9.8
Locomotive	531	8.3	30	0.5	119	0.1	18	2.4
Total Nonroad	4,521	70	3,242	54	41,800	42	557	74
Total Highway	1,648	26	2,496	42	56,303	56	158	21
Aircraft	262	4	262	4	1,502	2	43	6
Total Mobile Sources	6,431	100	6,000	100	99,605	100	758	100
Total Man-Made Sources	16,639	—	17,020	—	123,983	—	3,319	—
Mobile Source percent of Total Man-Made Sources	39	—	35	—	80	—	23	—

3. Why are Controls to Protect against CO Nonattainment and to Protect Visibility Needed From the Nonroad Engines and Vehicles That Would Be Subject to This Rule?

i. Why are We Controlling CO Emissions from Nonroad Engines and Vehicles that Would be Subject to this Rule?

Engines subject to this rule contributed about 3.8 percent of CO from mobile sources in 2000. Over 22.4 million people currently live in the 13 nonattainment areas for the CO National Ambient Air Quality Standard (NAAQS). Industry association comments questioned the need for CO control and snowmobile contribution, in particular. First, the statute envisions that categories should be considered in determining contribution because otherwise, it would be possible to continue to arbitrarily divide subcategories until the contribution from any subcategory becomes minimal while the cumulative effect of the air pollution remains. EPA previously determined that the category of Large SI engines and recreational vehicles cause or contribute to ambient CO and ozone in more than one nonattainment area (65 FR 76790, December 7, 2000). EPA also examined recreational vehicles separately and found that recreational vehicles subject to this rule contribute to CO nonattainment in areas such as Los Angeles, Phoenix, Anchorage, and Las Vegas (see RSD chapter 2). Thus, if considered as a category, recreational vehicles contribute to CO nonattainment.[6] Moreover, when we examined snowmobiles separately, they met the contribution criteria.

The International Snowmobile Manufacturers Association (ISMA) stated in its public comments that snowmobiles in particular are not operated in many of the CO nonattainment areas because of lack of snow (although they may be stored in those areas). The commenters also contended that northern areas have experienced improved CO air quality. Many areas are making progress in improving their air quality. However, an area cannot be redesignated to attainment until it can show EPA that it has had air quality levels within the level required for attainment and that it has a plan in place to maintain such levels. Until areas have been redesignated, they remain nonattainment areas.[7] Snowmobiles contribute to CO nonattainment in more than one of these areas.

Snowmobiles have relatively high per-engine CO emissions, and they can be a significant source of ambient CO levels in CO nonattainment areas. Despite the fact that snowmobiles are largely banned in CO nonattainment areas by the state of Alaska, the state estimated (and a National Research Council study confirmed) that snowmobiles contributed 0.3 tons/day in 2001 to Fairbanks' CO nonattainment area or 1.2 percent of a total inventory of 23.3 tons per day in 2001.[8,9] While Fairbanks has made significant progress in reducing ambient CO concentrations, existing climate conditions make achieving and maintaining attainment challenging. Anchorage, AK, reports a similar contribution of snowmobiles to their emissions inventories (0.34 tons per day in 2000). Furthermore, a recent National Academy of Sciences report concludes that ''Fairbanks will be susceptible to violating the CO health standards for many years because of its severe meteorological conditions. That point is underscored by a December 2001 exceedance of the standard in Anchorage which had no violations over the last 3 years.''[10]

ISMA commented that it agreed with EPA that there is a snowmobile trail within the Spokane, WA, CO nonattainment area, although they noted that snowmobile operation alone would not result in CO nonattainment. However, emissions from regulated categories need only contribute to, not themselves cause, nonattainment. Concentrations of NAAQS-related pollutants are by definition a result of multiple sources of pollution.

Several states that contain CO nonattainment areas also have large populations of registered snowmobiles and nearby snowmobile trails in adjoining counties, which are an indication of where they are operated (see Table I.E–4). EPA requested comment on the volume and nature of snowmobile use in these and other CO nonattainment areas. ISMA commented on the proximity of trails to northern CO nonattainment areas, assuming that snowmobiles are operated only on trails. A search of the available literature indicates that snowmobiles are ridden in areas other than trails. For example, a 1998 report by the Michigan Department of Natural Resources indicates that from 1993 to 1997, of the 146 snowmobile fatalities studied, 46 percent occurred on a state or county roadway (another 2 percent on roadway shoulders) and 27 percent occurred on private lands. Furthermore, accident reports in CO nonattainment area Fairbanks, AK, demonstrate that snowmobiles driven on streets have collided with motor vehicles. On certain days there may be concentrations of snowmobiles operated in nonattainment areas due to public events such as snowmachine races (such as the Iron Dog Gold Rush Classic, which finishes in Fairbanks, AK), during which snowmobiles will be present and operated.

TABLE I.E–4.—SNOWMOBILE USE IN SELECTED CO NONATTAINMENT AREAS

City and state	CO nonattainment classification	2001 State snowmobile population[a]
Anchorage, AK		
Fairbanks, AK	Serious	[b] 35576
Spokane, WA	Serious	31532
Fort Collins, CO	Moderate	32500
Medford, OR	Moderate	16809

[6] Likewise, Large SI equipment and recreational marine diesel engines also contribute to CO in nonattainment areas.

[7] There are important reasons to focus on redesignation status, as compared to just current air quality. Areas with a few years of attainment data can and often do have exceedances following such years of attainment because of several factors including different climatic events during the later years, increases in inventories, etc. Control of emissions from nonroad engines can help to avoid potential future air quality problems.

[8] Draft Anchorage Carbon Monoxide Emission Inventory and Year 2000 Attainment Projections, Air Quality Program, May 2001, Docket Number A–2000–01, Document II–A–40; Draft Fairbanks 1995–2001 Carbon Monoxide Emissions Inventory, June 1, 2001, Docket Number A–2000–01, Document II–A–39.

[9] National Research Council. The Ongoing Challenge of Managing Carbon Monoxide Pollution in Fairbanks, AK. May 2002. Docket A–2000–01, Document No. IV–A–115.

[10] National Research Council. The Ongoing Challenge of Managing Carbon Monoxide Pollution in Fairbanks, AK. May 2002. Docket A–2000–01, Document IV–A–115.

TABLE I.E–4.—SNOWMOBILE USE IN SELECTED CO NONATTAINMENT AREAS—Continued

City and state	CO nonattainment classification	2001 State snowmobile population[a]
Missoula, MT	Moderate	23440

[a] Source: ISMA U.S. Snowmobile Registration History, May 15, 2001; various studies prepared for state snowmobile associations included in Docket A–2000–01.
[b] Point of sale registration was not mandatory in Alaska prior to 1998, so the statewide registered population is likely to underestimate the total population.

Exceedances of the 8-hour CO standard were recorded in three of seven CO nonattainment areas located in the northern portion of the country over the five year period from 1994 to 1999: Fairbanks, AK; Medford, OR; and Spokane, WA.[11] Given the variability in CO ambient concentrations due to weather patterns such as inversions, the absence of recent exceedances for some of these nonattainment areas should not be viewed as eliminating the need for further reductions to consistently attain and maintain the standard. A review of CO monitor data in Fairbanks from 1986 to 1995 shows that while median concentrations have declined steadily, unusual combinations of weather and emissions have resulted in elevated ambient CO concentrations well above the 8-hour standard of 9 ppm. Specifically, a Fairbanks monitor recorded average 8-hour ambient concentrations at 16 ppm in 1988, around 9 ppm from 1990 to 1992, and then a steady increase in CO ambient concentrations at 12, 14 and 16 ppm during some extreme cases in 1993, 1994 and 1995, respectively.[12]

In addition, there are 6 areas that have not been classified as nonattainment where air quality monitoring indicated a need for CO control. For example, CO monitors in northern locations such as Des Moines, IA, and Weirton, WV/Steubenville, OH, registered levels above the level of the CO standards in 1998.

ii. Why are Controls Needed From the Nonroad Engines and Vehicles That Would Be Subject to this Rule to Protect Visibility?

(1) Visibility is Impaired by Fine PM and Precursor Emissions From Nonroad Engines and Vehicles That Would Be Subject to This Rule.

Visibility can be defined as the degree to which the atmosphere is transparent to visible light.[13] Visibility degradation is an easily noticeable effect of fine PM present in the atmosphere, and fine PM is the major cause of reduced visibility in parts of the United States, including many of our national parks and in places across the country where people live, work, and recreate. Fine particles with significant light-extinction efficiencies include organic matter, sulfates, nitrates, elemental carbon (soot), and soil.

Visibility is an important effect because it has direct significance to people's enjoyment of daily activities in all parts of the country. Individuals value good visibility for the well-being it provides them directly, both in where they live and work, and in places where they enjoy recreational opportunities. Visibility is highly valued in significant natural areas such as national parks and wilderness areas, because of the special emphasis given to protecting these lands now and for future generations.

To quantify changes in visibility, we compute a light-extinction coefficient, which shows the total fraction of light that is decreased per unit distance. Visibility can be described in terms of PM concentrations, visual range, light extinction or deciview.[14] In addition to limiting the distance that one can see, the scattering and absorption of light caused by air pollution can also degrade the color, clarity, and contrast of scenes.

Visibility effects are manifest in two main ways: as local impairment (for example, localized hazes and plumes) and as regional haze. In addition, visibility impairment has a time dimension in that it might relate to a short-term excursion or to longer periods (for example, worst 20 percent of days or annual average levels).

Local-scale visibility degradation is commonly seen as a plume resulting from the emissions of a specific source or small group of sources, or it is in the form of a localized haze such as an urban ''brown cloud.'' Plumes are comprised of smoke, dust, or colored gas that obscure the sky or horizon relatively near sources. Impairment caused by a specific source or small group of sources has been generally termed as ''reasonably attributable.''

The second type of impairment, regional haze, results from pollutant emissions from a multitude of sources located across a broad geographic region. It impairs visibility in every direction over a large area, in some cases over multi-state regions. Regional haze masks objects on the horizon and reduces the contrast of nearby objects. The formation, extent, and intensity of regional haze is a function of meteorological and chemical processes, which sometimes cause fine particulate loadings to remain suspended in the atmosphere for several days and to be transported hundreds of kilometers from their sources.

On an annual average basis, the concentrations of non-anthropogenic fine PM are generally small when compared with concentrations of fine particles from anthropogenic sources. Anthropogenic contributions account for about one-third of the average extinction coefficient in the rural West and more than 80 percent in the rural East. Because of significant differences related to visibility conditions in the eastern and western U.S., we present information about visibility by region. Furthermore, it is important to note that even in those areas with relatively low

[11] Technical Memorandum to Docket A–2000–01 from Drew Kodjak, Attorney-Advisor, Office of Transportation and Air Quality, ''Air Quality Information for Selected CO Nonattainment Areas,'' July 27, 2001, Docket Number A–2000–01, Document Number II–B–18.

[12] Air Quality Criteria for Carbon Monoxide, U.S. EPA, EPA 600/P–99/001F, June 2000, at 3–38, Figure 3–32 (Federal Bldg, AIRS Site 020900002). Air Docket A–2000–01, Document Number II–A–29. This document is also available at *http://www.epa.gov/ncea/coabstract.htm.*

[13] National Research Council, 1993. Protecting Visibility in National Parks and Wilderness Areas. National Academy of Sciences Committee on Haze in National Parks and Wilderness Areas. National Academy Press, Washington, DC. This document is available on the internet at *http://www.nap.edu/books/0309048443/html/.* See also U.S. EPA Air Quality Criteria Document for Particulate Matter (1996) and Review of the National Ambient Air Quality Standards for Particulate Matter: Policy Assessment of Scientific and Technical Information. These documents can be found in Docket A–99–06, Documents No. II–A–23 and IV–A–130–32.

[14] Visual range can be defined as the maximum distance at which one can identify a black object against the horizon sky. It is typically described in miles or kilometers. Light extinction is the sum of light scattering and absorption by particles and gases in the atmosphere. It is typically expressed in terms of inverse megameters (Mm-1), with larger values representing worse visibility. The deciview metric describes perceived visual changes in a linear fashion over its entire range, analogous to the decibel scale for sound. A deciview of 0 represents pristine conditions. Under many scenic conditions, a change of 1 deciview is considered perceptible by the average person.

concentrations of anthropogenic fine particles, such as the Colorado plateau, small increases in anthropogenic fine particle concentrations can lead to significant decreases in visual range. This is one of the reasons Class I areas have been given special consideration under the Clean Air Act.

Nonroad engines that are subject to this final rule contribute to ambient fine PM levels in two ways. First, they contribute through direct emissions of fine PM. As shown in Table I.E–1, these engines emitted 14,600 tons of PM (over 2 percent of all mobile source PM) in 2000. Second, these engines contribute to indirect formation of PM through their emissions of gaseous precursors which are then transformed in the atmosphere into particles. For example, these engines emitted over 8 percent of the HC tons from mobile sources. Furthermore, recreational vehicles, such as snowmobiles and all-terrain vehicles emit high levels of organic carbon (as HC) on a per-engine basis. Some organic emissions are transformed into particles in the atmosphere and other volatile organics can condense if emitted in cold temperatures, as is the case for emissions from snowmobiles, for example. Organic carbon accounts for between 27 and 36 percent of ambient fine particle mass depending on the area of the country.

(A) Visibility Impairment Where People Live, Work and Recreate

The secondary PM NAAQS is designed to protect against adverse welfare effects such as visibility impairment. In 1997, the secondary PM NAAQS was set as equal to the primary (health-based) PM NAAQS (62 **Federal Register** No. 138, July 18, 1997). EPA concluded that PM can and does produce adverse effects on visibility in various locations, depending on PM concentrations and factors such as chemical composition and average relative humidity. In 1997, EPA demonstrated that visibility impairment is an important effect on public welfare and that visibility impairment is experienced throughout the U.S., in multi-state regions, urban areas, and remote Federal Class I areas.

In many cities having annual mean $PM_{2.5}$ concentrations exceeding 17 μg/m^3, improvements in annual average visibility resulting from the attainment of the annual $PM_{2.5}$ standard are expected to be perceptible to the general population (*e.g.*, to exceed 1 deciview). Based on annual mean monitored $PM_{2.5}$ data, many cities in the Northeast, Midwest, and Southeast as well as Los Angeles would be expected to experience perceptible improvements in visibility if the $PM_{2.5}$ annual standard were attained. For example, in Washington, DC, where the IMPROVE monitoring network shows annual mean $PM_{2.5}$ concentrations at about 19 μg/m^3 during the period of 1992 to 1995, approximate annual average visibility would be expected to improve from 21 km (29 deciview) to 27 km (27 deciview), a change of 2 deciviews. The $PM_{2.5}$ annual average in Washington, DC, was 18.9 μg/m^3 in 2000.

The updated monitored data and air quality modeling presented in the RSD confirm that the visibility situation identified during the NAAQS review in 1997 is still likely to exist. Thus, the determination in the NAAQS rulemaking about broad visibility impairment and related benefits from NAAQS compliance are still relevant. Levels above the fine PM NAAQS cause adverse welfare impacts, such as visibility impairment (both regional and localized impairment).

Furthermore, in setting the PM NAAQS, EPA acknowledged that levels of fine particles below the NAAQS may also contribute to unacceptable visibility impairment and regional haze problems in some areas, and Clean Air Act Section 169 provides additional authorities to remedy existing impairment and prevent future impairment in the 156 national parks, forests and wilderness areas labeled as Class I areas.

In making determinations about the level of protection afforded by the secondary PM NAAQS, EPA considered how the Section 169 regional haze program and the secondary NAAQS would function together. Regional strategies are expected to improve visibility in many urban and non-Class I areas as well. The following recommendation for the National Research Council, Protecting Visibility in National Parks and Wilderness Areas (1993), addresses this point:

Efforts to improve visibility in Class I areas also would benefit visibility outside these areas. Because most visibility impairment is regional in scale, the same haze that degrades visibility within or looking out from a national park also degrade visibility outside it.

The 1999–2000 $PM_{2.5}$ monitored values, which cover about a third of the nation's counties, indicate that at least 82 million people live in areas where long-term ambient fine particulate matter levels are at or above 15 μg/m^3.[15] Thus, these populations (plus those who travel to those areas) could be experiencing visibility impairment that is unacceptable, and emissions of PM and its precursors from engines in these categories contribute to this unacceptable impairment.[16]

Because the chemical composition of the PM affects visibility impairment, we used EPA's Regulatory Model System for Aerosols and Deposition (REMSAD)[17] model to project visibility conditions in 2030 accounting for the chemical composition of the particles and to estimate visibility impairment directly as changes in deciview. Our projections included anticipated emissions from the engines subject to this rule, and although our emission predictions reflected our best estimates of emissions projections at the time the modeling was conducted, we now have new estimates, as discussed in the RSD Chapter 1. Based on public comment for this rule and new information, we have revised our emissions estimates in some categories downwards and other categories upwards; however, on net, we believe the modeling underestimates the PM air quality levels that would have been predicted if new inventories were used.

The most reliable information about the future visibility levels would be in areas for which monitoring data are available to evaluate model performance for a base year (*e.g.*, 1996). Accordingly, we predicted that in 2030, 49 percent of the population will be living in areas where fine PM levels are above 15 μg/m^3 and monitors are available.[18] This can be compared with the 1996 level of 37 percent of the population living in areas where fine PM levels are above 15 μg/m^3 and monitors are available. Thus, a substantial percent of the population would experience unacceptable visibility impairment in areas where they live, work and recreate.

As shown in Table I.E–5, in 2030, we expect visibility in the East to be about

[15] Memorandum to Docket A–99–06 from Eric O. Ginsburg, Senior Program Advisor, ''Summary of 1999 Ambient Concentrations of Fine Particulate Matter,'' November 15, 2000. Air Docket A–2000–01, Document No. II–B–12.

[16] These populations would obviously also be exposed to PM concentrations associated with the adverse health impacts related to $PM_{2.5}$.

[17] Additional information about the Regulatory Model System for Aerosols and Deposition (REMSAD) and our modeling protocols can be found in our Regulatory Impact Analysis: Heavy-Duty Engine and Vehicle Standards and Highway Diesel Fuel Sulfur Control Requirements, document EPA420–R–00–026, December 2000. Docket No. A–2000–01, Document No. A–II–13. This document is also available at *http://www.epa.gov/otaq/disel.htm#documents.*

[18] Technical Memorandum, EPA Air Docket A–99–06, Eric O. Ginsburg, Senior Program Advisor, Emissions Monitoring and Analysis Division, OAQPS, Summary of Absolute Modeled and Model-Adjusted Estimates of Fine Particulate Matter for Selected Years, December 6, 2000, Table P–2. Docket Number 2000–01, Document Number II–B–14.

19 deciviews (or visual range of 60 kilometers) on average, with poorer visibility in urban areas, compared to the visibility conditions without man-made pollution of 9.5 deciviews (or visual range of 150 kilometers). Likewise, we expect visibility in the West to be about 9.5 deciviews (or visual range of 150 kilometers) in 2030, compared to the visibility conditions without man-made pollution of 5.3 deciviews (or visual range of 230 kilometers).

Nonroad engines contribute significantly to these effects. As shown in Tables I.E–1 through I.E–3, nonroad engines emissions contribute a large portion of the total PM emissions from mobile sources and anthropogenic sources, in general. These emissions occur in and around areas with PM levels above the annual $PM_{2.5}$ NAAQS. The engines subject to the final rule will contribute to these effects. They are estimated to emit 36,500 tons of direct PM in 2030, which is 1.1 percent of the total anthropogenic PM emissions in 2030. Similarly, for PM precursors, the engines subject to this rule will emit 640,000 tons of NO_X and 1,411,000 tons HC in 2030, which are 3.8 and 8.3 percent of the total anthropogenic NO_X and HC emissions, respectively, in 2030. Recreational vehicles in particular contribute to these levels. In Table I.E–1 through I.E–3, we show that recreational vehicles emitted about 1.7 percent of mobile source PM emissions in 2000. Similarly, recreational vehicles are modeled to emit over 4 percent of mobile source PM in 2020 and 2030. Thus, the emissions from these sources contribute to the visibility impairment modeled for 2030 summarized in the table.

Furthermore, for 20 counties across nine states, snowmobile trails are found within or near counties that registered ambient $PM_{2.5}$ concentrations at or above 15 $\mu g/m^3$, the level of the $PM_{2.5}$ NAAQS.[19] Fine particles may remain suspended for days or weeks and travel hundreds to thousands of kilometers, and thus fine particles emitted or created in one county may contribute to ambient concentrations in a neighboring county.[20, 21]

TABLE I.E–5—SUMMARY OF 2030 NATIONAL VISIBILITY CONDITIONS BASED ON REMSAD MODELING

[Deciviews]

Regions [a]	Predicted 2030 visibility [b] (annual average)	Natural background visibility
Eastern		
U.S.	18.98	9.5
Urban	20.48	
Rural ..	18.38	
Western		
U.S.	9.54	5.3
Urban	10.21	
Rural ..	9.39	

[a] Eastern and Western Regions are separated by 100 degrees north longitude. Background visibility conditions differ by region.

[b] The results incorporate earlier emissions estimates from the engines subject to this rule, as discussed in the Final Regulatory Support Document. We have revised our estimates both upwards for some categories and downwards for others based on public comment and updated information; however, we believe that the net results would underestimate future PM emissions.

(B) Visibility Impairment in Class I Areas

The Clean Air Act establishes special goals for improving visibility in many national parks, wilderness areas, and international parks. In the 1977 amendments to the Clean Air Act, Congress set as a national goal for visibility the ''prevention of any future, and the remedying of any existing, impairment of visibility in mandatory class I Federal areas which impairment results from manmade air pollution'' (CAA section 169A(a)(1)). The Amendments called for EPA to issue regulations requiring States to develop implementation plans that assure ''reasonable progress'' toward meeting the national goal (CAA Section 169A(a)(4)). EPA issued regulations in 1980 to address visibility problems that are ''reasonably attributable'' to a single source or small group of sources, but deferred action on regulations related to regional haze, a type of visibility impairment that is caused by the emission of air pollutants by numerous emission sources located across a broad geographic region. At that time, EPA acknowledged that the regulations were only the first phase for addressing visibility impairment. Regulations dealing with regional haze were deferred until improved techniques were developed for monitoring, for air quality modeling, and for understanding the specific pollutants contributing to regional haze.

In the 1990 Clean Air Act amendments, Congress provided additional emphasis on regional haze issues (see CAA section 169B). In 1999 EPA finalized a rule that calls for States to establish goals and emission reduction strategies for improving visibility in all 156 mandatory Class I national parks and wilderness areas. In this rule, EPA established a ''natural visibility'' goal. In that rule, EPA also encouraged the States to work together in developing and implementing their air quality plans. The regional haze program is focused on long-term emissions decreases from the entire regional emissions inventory comprised of major and minor stationary sources, area sources and mobile sources. The regional haze program is designed to improve visibility and air quality in our most treasured natural areas from these broad sources. At the same time, control strategies designed to improve visibility in the national parks and wilderness areas will improve visibility over broad geographic areas. In the 1997 PM NAAQS rulemaking, EPA also anticipated the need in addition to the NAAQS and Section 169 regional haze program to continue to address localized impairment that may relate to unique circumstances in some Western areas. For mobile sources, there is a need for a Federal role in reduction of those emissions, particularly because mobile source vehicles are regulated primarily at the federal level.

Visibility impairment is caused by pollutants (mostly fine particles and precursor gases) directly emitted to the atmosphere by several activities (such as electric power generation, various industry and manufacturing processes, truck and auto emissions, construction activities, etc.). These gases and particles scatter and absorb light, removing it from the sight path and creating a hazy condition. Visibility impairment is caused by both regional haze and localized impairment. As described above, regional haze is caused

[19] Memo to file from Terence Fitz-Simons, OAQPS, Scott Mathias, OAQPS, Mike Rizzo, Region 5, ''Analyses of 1999 PM Data for the PM NAAQS Review,'' November 17, 2000, with attachment B, 1999 $PM_{2.5}$ Annual Mean and 98th Percentile 24-Hour Average Concentrations. Docket No. A–2000–01, Document No. II–B–17.

[20] This information also shows that snowmobiles contribute to concentrations of fine PM that are above the primary health-related NAAQS, which indicates that emissions from snowmobiles also contribute to primary and secondary PM pollution that may reasonably be anticipated to endanger public health and welfare.

[21] Review of the National Ambient Air Quality Standards for Particulate Matter: Policy Assessment for Scientific and Technical Information, OAQPS Staff Paper, EPA–452\R–96–013, July, 1996, at IV–7. This document is available from Docket A–99–06, Document II–A–23.

by the emission from numerous sources located over a wide geographic area.[22]

Because of evidence that fine particles are frequently transported hundreds of miles, all 50 states, including those that do not have Class I areas, participate in planning, analysis, and, in many cases, emission control programs under the regional haze regulations. Even though a given State may not have any Class I areas, pollution that occurs in that State may contribute to impairment in Class I areas elsewhere. The rule encourages states to work together to determine whether or how much emissions from sources in a given state affect visibility in a downwind Class I area.

The regional haze program calls for states to establish goals for improving visibility in national parks and wilderness areas to improve visibility on the haziest 20 percent of days and to ensure that no degradation occurs on the clearest 20 percent of days (64 FR 35722. July 1, 1999). The rule requires states to develop long-term strategies including enforceable measures designed to meet reasonable progress goals toward natural visibility conditions. Under the regional haze program, States can take credit for improvements in air quality achieved as a result of other Clean Air Act programs, including national mobile source programs.[23]

In the PM air quality modeling described above, we also modeled visibility conditions in the Class I areas, and we summarize the results by region in Table I.E–6.

TABLE I.E–6—SUMMARY OF 2030 VISIBILITY CONDITIONS IN CLASS I AREAS BASED ON REMSAD MODELING

[Annual Average Deciview]

Region [a]	Predicted 2030 visibility [b]	Natural background visibility
Eastern	.....	9.5
Southeast	25.02	.....
Northeast/Midwest	21.00	.....
Western	.....	5.3
Southwest	8.69	.....
California	11.61	.....
Rocky Mountain	12.30	.....
Northwest	15.44	.....
National Class I Area Average	14.04	.....

[a] Regions are depicted in Figure VI–5 in the Regulatory Support Document for the highway Heavy Duty Engine/Diesel Fuel RIA (EPA 420–R–00–026, December 2000.) Background visibility conditions differ by region: Eastern natural background is 9.5 deciviews (or visual range of 150 kilometers) and in the West natural background is 5.3 deciviews (or visual range of 230 kilometers).

[b] The results incorporate earlier emissions estimates from the engines subject to this rule, as discussed in the Final Regulatory Support Document. We have revised our estimates both upwards for some categories and downwards for others based on public comment and updated information; however, we believe that the net results underestimate future PM emissions.

Nonroad engines represent a sizeable portion of the total inventory of anthropogenic emissions related to PM2.5, as shown in the tables above. Numerous types of nonroad engines may operate near Class I areas (*e.g.*, mining equipment, recreational vehicles, and agricultural equipment). We have reviewed contributions from snowmobile in particular.

Emissions from nonroad engines, in particular snowmobiles, contribute significantly to visibility impairment in Class I areas.[24] Visibility and PM monitoring data are available for eight Class I areas where snowmobiles are commonly used. These are: Acadia, Boundary Waters, Denali, Mount Rainier, Rocky Mountain, Sequoia and Kings Canyon, Voyageurs, and Yellowstone.[25] Fine particle monitoring data for these parks are set out in Table I.E–7. This table shows the number of monitored days in the winter that fell within the 20-percent worst visibility days for each of these eight parks. Monitors collect data 2 days a week for a total of about 104 days of monitored values. Thus, for a particular site, a maximum of 21 worst possible days of these 104 days with monitored values constitute the set of 20-percent worst visibility days during a year which are tracked as the primary focus of regulatory efforts.[26] With the exception of Denali in Alaska, we defined the snowmobile season as January 1 through March 15 and December 15 through December 31 of the same calendar year, consistent with the methodology used in the Regional Haze Rule, which is calendar-year based. For Denali in Alaska, the snowmobile season is October 1 to April 30.

[22] U.S. EPA Review of the National Ambient Air Quality Standards for Particulate Matter: Policy Assessment of Scientific and Technical Information OAQPS Staff Paper. EPA–452/R–96–013. 1996. Docket Number A–99–06, Documents Nos. II–A–18, 19, 20, and 23. The particulate matter air quality criteria documents are also available at *http://www.epa.gov/ncea/partmatt.htm*.

[23] In a recent case, *American Corn Growers Association* v. *EPA*, 291 F. 3d 1 (D.C. Cir 2002), the court vacated the BART provisions of the Regional Haze rule, but the court denied industry's challenge to EPA's requirement that state's SIPs provide for reasonable progress towards achieving natural visibility conditions in national parks and wilderness areas and the ''no degradation'' requirement. Industry did not challenge requirements to improve visibility on the haziest 20 percent of days. A copy of this decision can be found in Docket A–2000–01, Document IV–A–113.

[24] The results incorporate earlier emissions estimates from the engines subject to this rule, as discussed in the Final Regulatory Support Document. We have revised our estimates both upwards for some categories and downwards for others based on public comment and updated information; however, we believe that the net results would underestimate future PM emissions.

[25] No data were available at five additional parks where snowmobiles are also commonly used: Black Canyon of the Gunnison, CO, Grand Teton, WY, Northern Cascades, WA, Theodore Roosevelt, ND, and Zion, UT.

[26] Letter from Debra C. Miller, Data Analyst, National Park Service, to Drew Kodjak, August 22, 2001. Docket No. A–2000–01, Document Number II–B–28.

TABLE I.E–7—WINTER DAYS THAT FALL WITHIN THE 20 PERCENT WORST VISIBILITY DAYS AT NATIONAL PARKS USED BY SNOWMOBILES

NPS unit	States	Number of sampled wintertime days within 20 percent worst visibility days (maximum of 21 out of 104 monitored days)			
		1996	1997	1998	1999
Acadia NP	ME	4	4	2	1
Denali NP and Preserve	AK	10	10	12	9
Mount Rainier NP	WA	1	3	1	1
Rocky Mountain NP	CO	2	1	2	1
Sequoia and Kings Canyon NP	CA	4	9	1	8
Voyageurs NP (1989–1992)	MN	1989	1990	1991	1992
		3	4	6	8
—Boundary Waters USFS Wilderness Area (close to Voyaguers with recent data).	MN	2	5	1	5
Yellowstone NP	ID, MT, WY	0	2	0	0

Source: Letter from Debra C. Miller, Data Analyst, National Park Service, to Drew Kodjak, August 22, 2001. Docket No. A–2000–01, Document Number II–B–28.

According to the National Park Service, ''[s]ignificant differences in haziness occur at all eight sites between the averages of the clearest and haziest days. Differences in mean standard visual range on the clearest and haziest days fall in the approximate range of 115–170 km.'' [27] We examined future air quality predictions to whether the emissions from recreational vehicles, such as snowmobiles, contribute to regional visibility impairment in Class I areas. We present results from the future air quality modeling described above for these Class I areas in addition to inventory and air quality measurements. Specifically, in Table I.E–8, we summarize the expected future visibility conditions in these areas without these regulations.

TABLE I.E–8—ESTIMATED 2030 VISIBILITY IN SELECTED CLASS I AREAS [a,b]

Class I area	County	State	Predicted 2030 visibility (annual average deciview)	Natural background visibility (annual average deciview)
Eastern areas				9.5
Acadia	Hancock Co	ME	23.42	
Boundary Waters	St. Louis Co	MN	22.07	
Voyageurs	St. Louis Co	MN	22.07	
Western areas				5.3
Grand Teton NP	Teton Co	WY	11.97	
Kings Canyon	Fresno Co	CA	10.39	
Mount Rainier	Lewis Co	WA	16.19	
Rocky Mountain	Larimer Co	CO	8.11	
Sequoia-Kings	Tulare Co	CA	9.36	
Yellowstone	Teton Co	WY	11.97	

[a] Natural background visibility conditions differ by region because of differences in factors such as relative humidity: Eastern natural background is 9.5 deciviews (or visual range of 150 kilometers) and in the West natural background is 5.3 deciviews (or visual range of 230 kilometers).

[b] The results incorporate earlier emissions estimates from the engines subject to this rule. We have revised our estimates both upwards for some categories and downwards for others based on public comment and updated information; however, on net, we believe that HD07 analyses would underestimate future PM emissions from these categories.

The information presented in Table I.E–7 shows that visibility data support a conclusion that there are at least 8 Class I Areas (7 national parks and one wilderness area) frequented by snowmobiles with one or more wintertime days within the 20-percent worst visibility days of the year, and in many cases several days. For example, Rocky Mountain National Park in Colorado was frequented by about 27,000 snowmobiles during the 1998–1999 winter. Of the monitored days characterized as within the 20-percent worst visibility monitored days, 2 of those days occurred during the wintertime when snowmobile emissions such as hydrocarbons contributed to visibility impairment.

The information in Table I.E–8 shows that these areas also are predicted to have high annual average deciview levels in the future. Emissions from snowmobiles and other recreational vehicles, as well as other nonroad engines contributed to these levels.[28]

[27] Letter from Debra C. Miller, Data Analyst, National Park Service, to Drew Kodjak, August 22, 2001. Docket No. A–2000–01, Document Number II–B–28.

[28] See Chapter 1 in the RSD for a discussion or U.S. EPA Technical Support Document for Heavy-duty Engine and Vehicle Standards and Highway Diesel Fuel Sulfur Control Requirements—Air Quality Modeling Analyses December 2000. Docket No. A–2000–01, Docket Number IV–A–218. This document is also avaiable at *www.epa.gov/otaq/hdmodels.htm.*

Ambient concentrations of fine particles are the primary pollutant responsible for visibility impairment. The classes of fine particles principally responsible for visibility impairment are sulfates, nitrates, organic carbon particles, elemental carbon, and crustal material. Hydrocarbon emissions from automobiles, trucks, snowmobiles, and other industrial processes are common sources of organic carbon. The organic carbon fraction of fine particles ranges from 47 percent in Western areas such as Denali National Park, to 28 percent in Rocky Mountain National Park, to 13 percent in Acadia National Park.[29]

In the winter months, HC emissions from snowmobiles can be significant, and these HC emissions can be more than half of the organic carbon fraction of fine particles which are largely responsible for visibility impairment. In Yellowstone, a park with high snowmobile usage during the winter months, snowmobile HC emissions can exceed 500 tons per year, as much as several large stationary sources.[30] Other parks with less snowmobile traffic are also impacted although to a lesser extent by these HC emissions.[31]

Table I.E–9 shows estimated tons of four pollutants during the winter season in five Class I national parks for which we have estimates of snowmobile use. The national park areas outside of Denali in Alaska are open to snowmobile operation in accordance with special regulations (36 CFR part 7). Denali National Park permits snowmobile operation by local rural residents engaged in subsistence uses (36 CFR part 13).

TABLE I.E–9.—WINTER SEASON SNOWMOBILE EMISSIONS

[tons; 1999 Winter Season]

NPS unit	HC	CO	NO_X	PM
Denali NP & Preserve	>9.8	>26.1	>0.08	>0.24
Grand Teton NP	13.7	36.6	0.1	0.3
Rocky Mountain NP	106.7	284.7	0.8	2.6
Voyageurs NP	138.5	369.4	1.1	3.4
Yellowstone NP	492	1311.9	3.8	12

Source: Letter from Aaron J. Worstell, Environmental Engineer, National Park Service, Air Resources Division, to Drew Kodjak, August 21, 2001, particularly Table 1. Docket No. A–2000–01, Document No. II–G–178.

Inventory analysis performed by the National Park Service for Yellowstone National Park suggests that snowmobile emissions are a significant source of total annual mobile source emissions for the park year round. The proportion of snowmobile emissions to emissions from other sources affecting air quality in these parks is likely to be similar to that in Yellowstone.

Furthermore, public comments from an industry-initiated study contained modeling showing a 4 to 8 percent contribution to perceptible impairment from snowmobile exhaust in Yellowstone National Park. Although we believe the modeling technique may not be fully appropriate, the study still indicates a significant contribution from snowmobiles. EPA conducted independent modeling using a more appropriate visibility model, and we confirmed that snowmobiles would be creating perceptible plumes at all park entrances, impairing visibility. This evidence shows that snowmobiles contribute significantly to visibility impairment in several Class I areas.

(C) Regulation of HC Is a Good Proxy for Regulation of Fine PM Emissions From Current Snowmobile Engines

We believe the best way to regulate the contribution to ambient concentrations of fine PM from current snowmobile engines is to set standards to control HC emissions. The current fleet of snowmobiles consists almost exclusively of two-stroke engines. Two-stroke engines inject lubricating oil into the air intake system where it is combusted with the air and fuel mixture in the combustion chamber. This is done to provide lubrication to the piston and crankshaft, since the crankcase is used as part of the fuel delivery system and cannot be used as a sump for oil storage as in four-stroke engines. As a result, in addition to products of incomplete combustion, two-stroke engines also emit a mixture of uncombusted fuel and lubricant oil. HC-related emissions from snowmobiles increase PM concentrations in two ways. Snowmobile engines emit HC directly as particles (such as droplets of lubricant oil). Snowmobile engines also emit HC gases, as well as raw unburned HC from the fuel which either condenses in cold temperatures to particles or reacts chemically to transform into particles as it moves in the atmosphere. As discussed above, fine particles can cause a variety of adverse health and welfare effects, including visibility impairment.

We believe measurements of HC emissions will serve as a reasonable surrogate for measurement of fine particles for snowmobiles for several reasons. First, emissions of PM and HC from these engines are related. Test data show that over 70 percent of the average volatile organic fraction of PM from a typical two-stroke snowmobile engine is organic hydrocarbons, largely from lubricating oil components.[32] The HC measurements (which use a 191° C heated flame-ionization detector (FID)) would capture the volatile component, which in ambient temperatures would be particles (as droplets).

Second, many of the technologies that will be employed to reduce HC emissions are expected to reduce PM (four-stroke engines, pulse air, and direct fuel injection techniques for example). The organic emissions are a mixture of fuel and oil, and reductions in the organic emissions will likely yield both HC and PM reductions. HC measurements would capture the reduction from both the gas and particle (at ambient temperature) phases. For example, the HC emission factor for a

[29] Letter from Debra C. Miller, Data Analyst, National Park Service, to Drew Kodjak, August 22, 2001. Docket No. A–2000–01, Document Number II–B–28.

[30] Emissions of NO_X from snowmobiles contribute to the total amount of particulate nitrate, although the total NO_X emissions from snowmobiles are considerably less than HC or direct PM emissions from these engines.

[31] Technical Memorandum, Aaron Worstell, Environmental Engineer, National Park Service, Air Resources Division, Denver, Colorado, particularly Table 1. Docket No. A–2000–01, Document Number II–G–178.

[32] Memo to Docket, Mike Samulski. ''Hydrocarbon Measurements as an Indicator for Particulate Matter Emissions in Snowmobiles,'' with attachments. September 6, 2002, Docket A–2000–01; Document No. IV–B–42.

typical two-stroke snowmobile is 111 g/hp-hr. The HC emission factor for a direct fuel injection engine is 21.8, and for a four-stroke is 7.8 g/hp-hr, representing a 80-percent and 99-percent reduction, respectively. Similarly, the PM emission factor for a typical two-stroke snowmobile is 2.7 g/hp-hr. The corresponding PM emission factor for a direct fuel injection engine is 0.57, and for a four-stroke is 0.15 g/hp-hr, representing a 75 percent and 93 percent reduction, respectively.

Thus, manufacturers will generally reduce PM emissions as a result of reducing HC emissions, making separate PM standards less necessary. Moreover, PM standards would cover only the PM directly emitted at the tailpipe. It would not measure the gaseous or semi-volatile organic emissions which would condense or be converted into PM in the atmosphere. The HC measurements would also include the gaseous HC which would condense or be converted into PM in the atmosphere. Consequently, the HC measurement would be a more comprehensive measurement. Also, HC standards actually will reduce secondary PM emissions that would not necessarily be reduced by PM standards.

Finally, from an implementation point of view, PM is not routinely measured in snowmobiles. There is no currently established protocol for measuring PM and substantial technical issues would need to be overcome to create a new method. Establishing additional PM test procedures would also entail additional costs for manufacturers. HC measurements are more routinely performed on these types of engines, and these measurements currently serve as a more reliable basis for setting a numeric standard. Thus, we believe that regulation of HC is the best way to reduce PM emissions and PM contributions from current snowmobile engines.

We included a NO_X standard for snowmobiles. This standard will essentially cap NO_X emissions from these engines to prevent backsliding. We are not promulgating standards that would require substantial reductions in NO_X because we believe that standards which force substantial NO_X reductions would likely not lead to reductions in PM and may in fact increase PM levels. NO_X emissions from snowmobiles are very small, particularly compared to levels of HC. In fact, technologies that reduce HC and CO are likely to increase levels of NO_X and vice versa, because technologies to reduce HC and CO emissions would result in leaner operation. A lean air and fuel mixture causes NO_X emissions to increase. These increases are minor, however, compared to the reductions of HC (and therefore PM) that result from these techniques.

On the other hand, substantial control of NO_X emissions may have the counter-effect of increasing HC emissions and the greater PM emissions associated with those HC emissions. The only way to reduce NO_X emissions from four-stroke engines (at the same time as reducing HC and CO levels) would be to use a three-way catalytic converter. We do not have enough information at this time on the durability or safety implications of using a three-way catalyst with a four-stroke engine in snowmobile applications. Three-way catalyst technology is well beyond the technology reviewed for this rule and would need substantial additional review before being contemplated for snowmobiles. Thus, given the overwhelming level of HC compared to NO_X, and the secondary PM expected to result from these levels, it would be premature and possibly counterproductive to promulgate NO_X standards that require significant NO_X reductions from snowmobiles at this time. We have therefore decided to structure our long term HC+NO_X standard for 2012 and later model year snowmobiles to require only a cap on NO_X emissions from the advanced technology engines which will be the dominant technology in the new snowmobiles certified at that time.

II. Nonroad: General Provisions

This section describes general provisions concerning the emission standards adopted in this final rule and the ways in which a manufacturer shows compliance with these standards. Clean Air Act section 213(a)(3) requires us to set standards that achieve the greatest degree of emission reduction achievable through the application of technology that will be available, giving appropriate consideration to cost, noise, energy, and safety factors. Section 202(a)(4) provides further authority to adopt standards for pollution beyond that regulated under section 202(a)(3). In addition to emission standards, this document describes a variety of other provisions necessary for implementing the proposed emission-control program in an effective way, such as applying for certification, labeling engines, and meeting warranty requirements.

The discussions in this section are general and are meant to cover all the nonroad engines and vehicles subject to the new standards. In this Section II, the term engine is sometimes used to include both nonroad engines and nonroad vehicles. Refer to the discussions of specific programs, contained in Sections III through VI, to determine whether the regulations are being applied to the entire vehicle or just the engine, as well as for more information about specific requirements for different categories of nonroad engines and vehicles.

This section describes general nonroad provisions related to certification prior to sale or introduction into commerce. Section VII describes several compliance provisions that apply generally to nonroad engines, and Section VIII similarly describes general testing provisions.

A. Scope of Application

This final rule covers recreational marine diesel engines, nonroad spark-ignition engines rated over 19 kW, and recreational spark-ignition vehicles introduced into commerce in the United States. The following sections describe generally when emission standards apply to these products. These provisions are generally consistent with prior nonroad and motor-vehicle rulemakings. Refer to the specific program discussion below for more information about the scope of application and timing of new standards.

1. What Engines and Vehicles Are Subject to the Standards?

The scope of this rule is broadly set by Clean Air Act section 213(a), which instructs us to set emission standards for new nonroad engines and new nonroad vehicles. Generally speaking, this rule is intended to cover all new engines and vehicles in the categories listed above (including any associated equipment or vessels) for their entire useful lives, as defined in the regulations.[33] Once the emission standards apply to a group of engines or vehicles, manufacturers of a new engine must have an approved certificate of conformity from us before selling them in the United States.[34] This also applies to importation by any person and any other means of introducing new engines and vehicles into commerce. We also require equipment manufacturers that install engines from other companies to install only certified engines into new equipment once emission standards

[33] For recreational vehicles, we are adopting vehicle-based standards. For these applications, the term ''engine'' in this document applies equally to the vehicles.

[34] The term ''manufacturer'' includes any individual or company that manufactures any new engine for sale or otherwise introduces a new engine into commerce in the United States. It also includes importers for resale.

apply. The information we require of manufacturers applying for certification (with the corresponding engine labels) provides assurance that manufacturers have met their obligation to make engines that meet emission standards over the useful life we specify in the regulations.

2. How Do I Know if My Engine or Equipment Is New?

We are defining ''new'' consistent with previous rulemakings. We will consider a nonroad engine (or nonroad equipment) to be new until its title has been transferred to the ultimate purchaser or the engine has been placed into service. This definition applies to both engines and equipment, so the nonroad equipment using these engines, including all-terrain vehicles, snowmobiles, off-highway motorcycles, and other land-based nonroad equipment will be considered new until their title has been transferred to an ultimate buyer. In Section II.B.1 we describe how to determine the model year of individual engines and vehicles.

To further clarify the definition of new nonroad engine, we specify that a nonroad engine, vehicle, or equipment is placed into service when it is used for its intended purpose. An engine subject to emission standards is used for its functional purpose when it is installed in an all-terrain vehicle, snowmobile, off-highway motorcycle, marine vessel, or other piece of nonroad equipment. We need to make this clarification because some engines are made by modifying a highway or land-based nonroad engine that has already been installed on a vehicle or other piece of equipment. For example, someone can install an engine in a recreational marine vessel after it has been used for its functional purpose as a land-based highway or nonroad engine. We believe our approach is reasonable because the practice of adapting used highway or land-based nonroad engines may become more common if these engines are not subject to emission standards.

In summary, an engine may be subject to emission standards if it is:

- Freshly manufactured, whether domestic or imported; this may include engines produced from engine block cores
- Installed for the first time in nonroad equipment after having powered an automobile or a category of nonroad equipment subject to different emission standards
- Installed in new nonroad equipment, regardless of the age of the engine
- Imported (freshly manufactured or used) and was originally manufactured after the effective date of our standards

3. When Do Imported Engines Need To Meet Emission Standards?

The emission standards apply to all new engines sold in the United States. Consistent with Clean Air Act section 216, engines that are imported by any person, whether freshly manufactured or used are considered ''new'' engines.[35] Thus, we include engines that are imported for use in the United States, whether they are imported as loose engines or if they are already installed on a marine vessel, recreational vehicle, or other piece of nonroad equipment, built elsewhere. All imported engines manufactured after our standards begin to apply need an EPA-issued certificate of conformity to clear customs, with limited exemptions (as described below).

An engine or marine vessel, recreational vehicle, or other piece of nonroad equipment that was built after emission standards take effect cannot be imported without a currently valid certificate of conformity. We would consider it to be a new engine, vehicle, or vessel, which would trigger a requirement to comply with the applicable emission standards. Thus, for example, a marine vessel manufactured in a foreign country in 2007, then imported into the United States in 2010, would be considered ''new.'' The engines on that vessel would have to comply with the requirements for the 2007 model year, assuming no other exemptions apply. This provision is important to prevent manufacturers from avoiding emission standards by building vessels or vehicles abroad, transferring their title, and then importing them as used vessels or vehicles.

Imported engines are generally subject to emission standards. However, we are not adopting a definition of ''import'' in this regulation. We will defer to the U.S. Customs Service for determinations of when an engine or vehicle is imported into the U.S.

4. Do the Standards Apply to Exported Engines or Vehicles?

Engines or vehicles intended for export are generally not required to meet the emission standards or other requirements adopted in this rule. However, engines that will be exported and subsequently re-imported into the United States must be covered by a certificate of conformity. For example, this would occur when a foreign company purchases engines manufactured in the United States for installation on a marine vessel, recreational vehicle, or other nonroad equipment for export back to the United States. Those engines would be subject to the emission standards that apply on the date the engine was originally manufactured. If the engine is later modified and certified (or recertified), the engine is subject to emission standards that apply on the date the modification is complete. So, for example, foreign boat builders buying U.S.-made engines without recertifying the engines will need to make sure they purchase complying engines for the products they sell in the U.S. We also do not exempt engines exported to countries that share our emission standards.

5. Are Any New Engines or Vehicles in the Applicable Categories Not Subject to Emission Standards of This Rule?

We are extending our basic nonroad exemptions to the engines and vehicles covered by this rulemaking. These include the testing exemption, the manufacturer-owned exemption, the display exemption, and the national-security exemption. These exemptions are described in more detail in Section VII.C.

In addition, the Clean Air Act does not consider stationary engines or engines used solely for competition to be nonroad engines, so the emission standards do not apply to them. Refer to the program discussions below for a description of how these exclusions or exemptions apply for different categories of engines.

B. Emission Standards and Testing

1. Which Pollutants Are Covered by Emission Standards?

Engines subject to the exhaust emission standards must meet standards based on measured levels of specified pollutants, such as NO_X, HC, or CO, though not all engines have standards for each pollutant. Diesel engines generally must also meet a PM emission standard. In addition, there may be standards or other requirements for crankcase, evaporative, or permeation emissions, as described below.

The emission standards are effective on a model-year basis. We define model year much like we do for passenger cars. It generally means either the calendar year or some other annual production period based on the manufacturer's production practices. A model year may include January 1 from only one year.

[35] The definition in Clean Air Act section 216 applies specifically to ''new motor vehicles,'' but we have interpreted ''new nonroad engine'' consistently with the definition in section 216.

For example, manufacturers could start selling 2006 model year engines as early as January 2, 2005, as long as the production period extends until at least January 1, 2006. All of a manufacturer's engines from a given model year must meet emission standards for that model year. For example, manufacturers producing new engines in the 2006 model year need to comply with the 2006 standards. The model year of a particular engine is determined based on the date that the engine is fully assembled. In the case of recreational vehicles, this generally applies to the final assembly of the whole vehicle, since the emission standards apply to the vehicle. Refer to the individual program discussions below or the regulations for additional information about model year periods, including how to define what model year means in less common scenarios, such as installing used engines in new equipment.

2. What Standards Apply to Crankcase, Evaporative, Permeation, and Other Emissions?

Blow-by of combustion gases and the reciprocating action of the piston can cause exhaust emissions to accumulate in the crankcase of four-stroke engines. Uncontrolled engine designs route these vapors directly to the atmosphere, where they contribute to ambient levels of hydrocarbons. We have long required that automotive engines prevent emissions from their crankcases. Manufacturers typically do this by routing crankcase vapors through a valve into the engine's air intake system. We generally require in this rulemaking that engines control crankcase emissions.

Vehicles with spark-ignition engines use fuel that is volatile and the unburned fuel can be released into the ambient air. We are adopting standards to limit evaporative emissions from the fuel. Evaporative emissions result from heating gasoline or other volatile fuels in a tank that is vented to the atmosphere or from permeation through plastic fuel tanks and rubber hoses. Section IV describes the permeation standards for recreational vehicles. Section V provides additional information on the evaporative emission standards for Large SI engines.

We are also adopting a general requirement that all engines subject to this final rule may not cause or contribute to an unreasonable risk to public health, welfare, or safety, especially with respect to noxious or toxic emissions that may increase as a result of emission-control technologies. The regulatory language has been modified consistent with the alternate language suggested in the proposal. This alternate language implements sections 202(a)(4) and 206(a)(3) of the Act and clarifies that the purpose of this requirement is to prevent control technologies that would cause unreasonable risks, rather than to prevent trace emissions of any noxious compounds. For example, this requirement would prevent the use of emission-control technologies that produce high levels of pollutants for which we have not set emission standards, but nevertheless pose a risk to the public. However, it should be noted that this would generally not apply to exhaust gas recirculation systems on gasoline- or diesel-fueled engines.

3. What Duty Cycles Is EPA Adopting for Emission Testing?

Testing an engine for exhaust emissions typically consists of exercising it over a prescribed duty cycle of speeds and loads, typically using an engine or chassis dynamometer. The duty cycle used to measure emissions for certification, which is generally derived from typical operation from the field, is critical in evaluating the likely emissions performance of engines designed to emission standards. Testing for recreational marine diesel engines and Large SI engines may also include additional operation not included in the specific duty cycles.

Steady-state testing consists of engine operation for an extended period at several speed-load combinations. Associated with these test points are weighting factors that allow calculation of a single weighted-average steady-state emission level in g/kW. Transient testing involves a continuous trace of specified engine or vehicle operation; emissions are collected over the whole testing period for a single mass measurement.

See Section VIII.C for a discussion of how we define maximum test speed and intermediate speed for engine testing. Refer to the program discussions below for more information about the type of duty cycle required for testing the various engines and vehicles. Those sections also include information regarding testing provisions that do not rely on specific operating cycles (*i.e.*, field-testing, not-to exceed testing, and evaporative testing).

4. How Do Adjustable Engine Parameters Affect Emission Testing?

Many engines are designed with components that can be adjusted for optimum performance under changing conditions, such as varying fuel quality, high altitude, or engine wear. Examples of adjustable parameters include spark timing, idle-speed setting, and fuel-injection timing. While we recognize the need for this practice, we are also concerned that engines maintain an appropriate level of emission control for the whole range of adjustability. Manufacturers must therefore show that their engines meet emission standards over the full adjustment range. Manufacturers must also provide a physical stop to prevent adjustment outside the established range. Operators are then prohibited by the anti-tampering provisions from adjusting engines outside this range.

5. What Are Voluntary Low-Emission Engines and Blue Sky Standards?

Several state and environmental groups and manufacturers of emission controls have supported our efforts to develop incentive programs to encourage engine technologies that go beyond federal emission standards. Some companies have already significantly developed these technologies. In the final rule for land-based nonroad diesel engines, we included a program of voluntary standards for low-emitting engines, referring to these as ''Blue Sky Series'' engines (63 FR 56967, October 23, 1998). We included similar programs for commercial marine diesel engines. The general purposes of such programs are to provide incentives to manufacturers to produce clean products, as well as to create market choices and opportunities for environmental information for consumers regarding such products.

We are adopting voluntary Blue Sky Series standards for some of the engines subject to this final rule. Creating a program of voluntary standards for low-emitting engines, including testing and durability provisions to help ensure adequate in-use performance, will be a step forward in advancing emission-control technologies. While these are voluntary standards, they become binding once a manufacturer chooses to participate. EPA certification will therefore provide protection against false claims of environmentally beneficial products.

C. Demonstrating Compliance

We are adopting a compliance program to accompany the final emission standards. This consists first of a process for demonstrating that new engine models comply with the emission standards. In addition to new-engine testing, several provisions ensure that emission-control systems will continue to function over long-term

operation in the field. Most of these certification provisions are consistent with previous rulemakings for other nonroad engines. Refer to the discussion of the specific programs below for additional information about these requirements for each engine category.

1. How Do I Certify My Engines?

We are adopting a certification process similar to that already established for other nonroad engines. Manufacturers generally test representative prototype engines and submit the emission data along with other information to EPA in an application for a Certificate of Conformity. If we approve the application, EPA issues a Certificate of Conformity which allows the manufacturer to produce and sell the engines described in the application in the U.S.

Manufacturers certify their engine models by grouping them into engine families that have similar emission characteristics. The engine family definition is fundamental to the certification process and to a large degree determines the amount of testing required for certification. The regulations include specific engine characteristics for grouping engine families for each category of engines. To address a manufacturer's unique product mix, we may approve using broader or narrower engine families.

Engine manufacturers are responsible to build engines that meet the emission standards over each engine's useful life. The useful life we adopt by regulation is intended to reflect the period during which engines are designed to properly function without being remanufactured or the average service life. Useful life values, which are expressed in terms of years or amount of operation (in hours or kilometers), vary by engine category, as described in the following sections. Consistent with other recent EPA programs, we generally consider this useful life value in amount of operation to be a minimum value, requiring manufacturers to comply for a longer period in those cases where their engines operate longer than the minimum useful life.

The emission-data engine is the engine from an engine family that will be used for certification testing. To ensure that all engines in the family meet the standards, manufacturers must select the engine most likely to exceed emission standards in a family for certification testing. In selecting this ''worst-case'' engine, the manufacturer uses good engineering judgment. Manufacturers consider, for example, all engine configurations and power ratings within the engine family and the range of installed options allowed. Requiring the worst-case engine to be tested helps the manufacturer be sure that all engines within the engine family are complying with emission standards. Manufacturers estimate the rate of deterioration for each engine family over its useful life and show that engines continue to meet standards after incorporating the estimated deterioration. We may also test the engines ourselves.

Manufacturers must include in their application for certification the results of emission tests showing that the engine family meets emission standards. In addition, we may ask the manufacturer to include any additional data from their emission-data engines, including any diagnostic-type measurements (such as ppm testing) and invalidated tests. This complete set of test data ensures that the valid tests forming the basis of the manufacturer's application are a robust indicator of emission-control performance, rather than a spurious or incidental test result.

We are adopting test-fuel specifications intended to represent in-use fuels. Engines must be able to meet the standards on fuels with properties anywhere in the specified ranges. The test fuel is generally to be used for all testing associated with the regulations, including certification, production-line testing, and in-use testing. Refer to the program discussions below related to test fuel specifications.

We require engine manufacturers to give engine buyers instructions for properly maintaining their engines. We are including limitations on the frequency of scheduled maintenance that a manufacturer may specify for emission-related components to help ensure that emission-control systems don't depend on an unreasonable expectation of maintenance in the field. These maintenance limits also apply during any service accumulation that a manufacturer may do to establish deterioration factors. This approach is common to all our engine programs. It is important to note, however, that these provisions don't limit the maintenance an operator may perform; it merely limits the maintenance that operators can be expected to perform on a regularly scheduled basis. Refer to the discussion of the specific programs below for additional information about the allowable maintenance intervals for each category of engines.

Once an engine family is certified, we require every engine a manufacturer produces from the engine family to have a label with basic identifying information. The design and content of engine labels is specified in the regulations.

2. What Warranty Requirements Apply to Certified Engines?

Consistent with our current emission-control programs, manufacturers must provide a design and defect warranty covering emission-related components for a minimum period specified in the regulations. This minimum period is generally half of the useful life period. The regulations also provide that the manufacturer's emission warranty period could be adjusted to a value higher than the minimum period for those cases where the manufacturer provides a longer mechanical warranty for the engine or any of its components; this includes extended warranties that are available for an extra price. Any such adjustment would be dependent on the average service life of the vehicle as well. The manufacturer generally does not need to include scheduled maintenance or other routine maintenance under the emission warranty. See the regulation language for a detailed description of the components that are considered to be emission-related.

If an operator makes a valid warranty claim for an emission-related component during the warranty period, the engine manufacturer is generally obligated to replace the component at no charge to the operator. The engine manufacturer may deny warranty claims, however, if the operator caused the component failure by misusing the engine or failing to do necessary maintenance.

We are also adopting a defect reporting requirement that applies separate from the emission-related warranty (see Section VII.F). In general, defect reporting applies when a manufacturer discovers a pattern of component failures, whether that information comes from warranty claims, voluntary investigation of product quality, or other sources.

3. Can I Use Emission Averaging To Show That I Meet Emission Standards?

Many of our mobile source emission-control programs include voluntary use of emission credits to facilitate implementation of emission controls. An emission-credit program is an important factor we take into consideration in setting emission standards that are appropriate under Clean Air Act section 213. An emission-credit program can improve the technological feasibility and reduce the cost of achieving standards, allowing us to consider a more stringent emission standard than might otherwise be

appropriate, including a compliance date for the standards earlier than would otherwise be appropriate. Manufacturers gain flexibility in product planning and introduction of product lines meeting a new standard. Emission-credit programs also create an incentive for the early introduction of new technology, which allows certain engine families to act as trailblazers for new technology. This can help provide valuable information to manufacturers on the technology before they apply the technology throughout their product line. This early introduction of clean technology improves the feasibility of achieving the standards and can provide valuable information for use in other regulatory programs that may benefit from similar technologies.

Emission-credit programs may involve averaging, banking, or trading. Averaging allows a manufacturer to certify one or more engine families at emission levels above the applicable emission standards, as long as the increased emissions from that engine family are offset by one or more engine families certified below the applicable standards. The over-complying engine families generate credits that are used by the under-complying engine families. Compliance is determined taking into account differences in production volume, power and useful life among engine families. The average of all the engine families for a particular manufacturer's production must be at or below the level of the applicable emission standards. This calculation generally factors in sales-weighted average power, production volume, and useful life. Banking allows a manufacturer to generate emission credits and bank them for future use in its own averaging program in later years. Trading allows transfer of credits to another company.

In general, a manufacturer choosing to participate in an emission-credit program certifies each participating engine family to a Family Emission Limit. In its certification application, a manufacturer determines a separate Family Emission Limit for each pollutant included in the emission-credit program. The Family Emission Limit selected by the manufacturer becomes the emission standard for each engine in that engine family. Emission credits are based on the difference between the emission standard that applies to the family and the Family Emission Limit. Manufacturers must meet the Family Emission Limit for all emission testing of any engine in that family. At the end of the model year, manufacturers must show that the net effect of all their engine families participating in the emission-credit program is a zero balance or a net positive balance of credits. A manufacturer may generally choose to include only a single pollutant from an engine family in the emission-credit program or, alternatively, to establish a Family Emission Limit for each of the regulated pollutants. Refer to the program discussions below for more information about emission-credit provisions for individual engine categories.

4. What Are the Production-Line Testing Requirements?

We are adopting production-line testing requirements for recreational marine diesel engines, recreational vehicles, and Large SI engines. Manufacturers must routinely test production-line engines to help ensure that newly assembled engines control emissions at least as well as the emission-data engines tested for certification. Production-line testing serves as a quality-control step, providing information to allow early detection of any problems with the design or assembly of freshly manufactured engines. This is different than selective enforcement auditing, in which we would give a test order for more rigorous testing for a small subset of production-line engines in a particular engine family (see Section VII.E). Production-line testing requirements are already common to several categories of nonroad engines as part of their emission-control program.

If an engine fails to meet an emission standard, the manufacturer must modify it to bring that specific engine into compliance. Manufacturers may adjust the engine family's Family Emission Limit to take into account the results from production-line testing (if applicable). If too many engines exceed emission standards, this indicates it is more of a family-wide problem and the manufacturer must correct the problem for all affected engines. The remedy may involve changes to assembly procedures or engine design, but the manufacturer must, in any case, do sufficient testing to show that the engine family complies with emission standards before producing more engines. The remedy may also need to address engines already produced since the last showing that production-line engines met emission standards.

The production-line testing programs for Large SI engines and for recreational vehicles depend on the Cumulative Sum (CumSum) statistical process for determining the number of engines a manufacturer needs to test (see the regulations for the specific calculation methodology). Each manufacturer generally selects engines randomly at the beginning of each new quarter.[36] If engines must be tested at a facility where final assembly is not yet completed, manufacturers must randomly select engine components and assemble the test engine according to their established assembly instructions. The Cumulative Sum program uses the emission results to calculate the number of tests required for the remainder of the year to reach a pass or fail determination for production-line testing. If tested engines have emissions close to the standard, the statistical sampling method calls for an increased number of tests to show whether to make a pass or fail determination for the engine family. The remaining number of tests is recalculated after the manufacturer tests each engine. Engines selected should cover the broadest range of production configurations possible. Tests should also be distributed evenly throughout the sampling period to the extent possible.

If an engine family fails the production-line testing criteria, we may suspend the Certificate of Conformity. Under the CumSum approach, individual engines can exceed the emission standards without causing the whole engine family to exceed the production-line testing criteria. The production-line testing criteria are designed to determine if there is a problem that applies broadly across the engine family. Whether or not the production-line testing criteria are met, manufacturers must adjust or repair every failing engine and retest it to show that it meets the emission standards. Note also that all production-line emission measurements must be included in the periodic reports to us. This includes any type of screening or surveillance tests (including ppm measurements), all data points for evaluating whether an engine controls emissions ''off-cycle,'' and any engine tests that exceed the minimum required level of testing.

The regulations allow us to reduce testing requirements for engine families that consistently pass the production-line testing criteria. For engine families that pass all of the production-line test requirements for two consecutive years, the manufacturer may request a reduced testing rate. The minimum testing rate is one test per engine family for one year. Our approval for a reduced testing rate may be limited to a single model year,

[36] We consider an engine to be randomly selected if it undergoes normal assembly and manufacturing procedures. An engine is not randomly selected if it has been built with any kind of special components or procedures.

but manufacturers may continue to request reduced testing rates.

As we have concluded in other engine programs, some manufacturers may have unique circumstances that call for different methods to show that production engines comply with emission standards. A manufacturer may therefore suggest an alternate plan for testing production-line engines, as long as the alternate program is as effective at ensuring that the engines will comply. A manufacturer's petition to use an alternate plan should address the need for the alternative and should justify any changes from the regular testing program. The petition must also describe in detail the equivalent thresholds and failure rates for the alternate plan. If we approve the plan, we will use these criteria to determine when an engine family passes or fails the production-line testing criteria. It is important to note that this allowance is intended only as a flexibility, and is not intended to affect the stringency of the standards or the production-line testing program.

Refer to the specific program discussions below for additional information about production-line testing for different types of engines.

D. Other Concepts

1. What Are Emission-Related Installation Instructions?

Manufacturers selling loose engines to equipment manufacturers must develop a set of emission-related installation instructions. These instructions include anything the installer needs to know to ensure that the engine operates within its certified design configuration. For example, the installation instructions could specify a total capacity needed from the engine cooling system, placement of catalysts after final assembly, or specification of parts needed to control evaporative or permeation emissions. We approve emission-related installation instructions as part of the certification process. If equipment manufacturers fail to follow the established emission-related installation instructions, we will consider this tampering, which may subject them to significant civil penalties. Refer to the program discussions below for more information about specific provisions related to installation instructions.

2. Are There Special Provisions for Small Manufacturers of These Engines and Vehicles?

The scope of this rule includes many engine and vehicle manufacturers that have previously not been subject to our mobile source regulations or certification process. Some of these manufacturers are small businesses, with unique concerns relating to the compliance burden from the general regulating program. The sections describing the emission-control program include discussion of special compliance provisions designed to address this for the different engine categories.

III. Recreational Vehicles and Engines

A. Overview

We are adopting new exhaust emission standards for snowmobiles, off-highway motorcycles, and all-terrain vehicles (ATVs). The engines used in these vehicles are a subset of nonroad SI engines.[37] In our program to set exhaust emission standards for nonroad spark-ignition engines below 19 kW (Small SI), we excluded recreational vehicles because they have different design characteristics and usage patterns than certain other engines in the Small SI category. For example, engines typically found in the Small SI category are used in lawn mowers, chainsaws, trimmers, and other lawn and garden applications. These engines tend to have low power outputs and operate at constant loads and speeds, whereas recreational vehicles can have high power outputs with highly variable engine loads and speeds. This suggests that these engines should be regulated differently than Small SI engines. In the same way, we treat snowmobiles, off-highway motorcycles, and ATVs separately from our Large SI engine program, which is described in Section V. Recreational vehicles that are not snowmobiles, off-highway motorcycles, or ATVs, will be subject to the standards that otherwise apply to small nonroad spark-ignition engines (see Section III.B.2).

We are adopting exhaust emission standards for HC and CO from all recreational vehicles. We are adopting an additional requirement to control NO_X from off-highway motorcycles and ATVs. We believe that vehicle and engine manufacturers will be able to use technology already established for other types of engines, such as highway motorcycles, small spark-ignition engines, and marine engines, to meet these standards. We recognize that some small businesses manufacture recreational vehicles; we are therefore adopting several special compliance provisions to reduce the burden of emission regulations on small businesses.

1. What Are Recreational Vehicles and Who Makes Them?

We are adopting new exhaust emission standards for off-highway motorcycles, ATVs, and snowmobiles. Eight large manufacturers dominate the sales of these recreational vehicles. Of these eight manufacturers, seven of them manufacture two or more of the three main types of recreational vehicles. For example, there are four companies that manufacture both off-highway motorcycles and ATVs. There are three companies that manufacture ATVs and snowmobiles; one company manufactures all three. These eight companies represent approximately 95 percent of all domestic sales of recreational vehicles.

a. Off-highway motorcycles. Motorcycles are two-wheeled, self-powered vehicles that come in a variety of configurations and styles. Off-highway motorcycles are similar in appearance to highway motorcycles, but there are several important distinctions between the two types of machines. Off-highway motorcycles are not street-legal and are primarily operated on public and private lands over trails and open areas. A significant number are used in competition events. Off-highway motorcycles tend to be much smaller, lighter and more maneuverable than their larger highway counterparts. They are equipped with relatively small-displacement single-cylinder two- or four-stroke engines ranging from 48 to 650 cubic centimeters (cc) in size. The exhaust systems for off-highway motorcycles are distinctively routed high on the frame to prevent damage from brush, rocks, and water. Off-highway motorcycles are designed to be operated over varying surfaces, such as dirt, sand, or mud, and are equipped with knobby tires to give better traction in off-road conditions. Unlike highway motorcycles, off-highway motorcycles have fenders mounted far from the wheels and closer to the rider to keep dirt and mud from spraying the rider and clogging between the fender and tire. Off-highway motorcycles are also equipped with more advanced suspension systems than those for highway motorcycles. This allows the operator to ride over obstacles and make jumps safely.

Five companies dominate sales of off-highway motorcycles. They are long-established, large corporations that manufacture several different products including highway and off-highway motorcycles. These five companies account for 90 to 95 percent of all

[37] Almost all recreational vehicles are equipped with spark-ignition engines. Any diesel engines used in these applications must meet our emission standards for nonroad diesel engines.

domestic sales of off-highway motorcycles. There are also several relatively small companies that manufacture off-highway motorcycles, many of which specialize in competition machines.

b. All-terrain vehicles. The earliest ATVs were three-wheeled off-highway models with large balloon tires that existed in the early 1970's. Due to safety concerns, the three-wheeled ATVs were phased-out in the mid-1980s and replaced by the current and more popular four-wheeled vehicle known as ''quad runners'' or simply ''quads.'' Quads resemble the earlier three-wheeled ATVs except that the single front wheel was replaced with two wheels. The ATV steering system uses motorcycle handlebars, rather than a steering wheel. The operator sits on and rides the quad much like a motorcycle. The engines used in quads tend to be very similar to those used in off-highway motorcycles—relatively small, single-cylinder two- or four-stroke engines. Quads are typically divided into utility and sport models. The utility quads are designed for multi-function use and have the ability to perform many utility functions, such as plowing snow, tilling gardens, and mowing lawns in addition to use for recreational riding. They are typically heavier and equipped with relatively large four-stroke engines and automatic transmissions with a reverse gear. Sport quads are smaller and lighter and designed primarily for recreational purposes. They are equipped with two- or four-stroke engines and manual transmissions. Presently utility ATVs comprise about 75 percent of the market and sport models about 25 percent.

Of all of the types of recreational vehicles, ATVs have the largest number of major manufacturers. All but one of the companies noted above for off-highway motorcycles and below for snowmobiles are significant ATV producers. These seven companies represent over 95 percent of total domestic ATV sales. The remaining 5 percent of sales come from importers, which tend to import less expensive, youth-oriented ATVs.

As discussed below, we are requiring utility vehicles capable of speeds above 25 mph to comply the regulations for ATVs.

c. Snowmobiles. Snowmobiles, also referred to as ''sleds,'' are tracked vehicles designed to operate over snow. Snowmobiles have some similarities to off-highway motorcycles and ATVs. A snowmobile rider sits on and rides a snowmobile similar to an ATV. Snowmobiles use high-powered two- and three-cylinder two-stroke engines that look similar to off-highway motorcycle engines. Rather than wheels, snowmobiles are propelled by a track system similar to what is used on a bulldozer. The snowmobile is steered by two skis at the front of the sled. Snowmobiles use handlebars similar to off-highway motorcycles and ATVs. The typical snowmobile seats two riders comfortably. Over the years, snowmobile performance has steadily increased to the point that many snowmobiles currently have engines over 100 horsepower and are capable of exceeding 100 miles per hour. The definition for snowmobiles includes a limit of 1.5-meter width to differentiate conventional snowmobiles from ice-grooming machines and snow coaches, which use very different engines.

There are four major snowmobile manufacturers, accounting for more than 99 percent of all domestic sales. The remaining sales come from very small manufacturers who tend to specialize in high-performance designs.

d. Other recreational vehicles. Currently, our Small SI nonroad engine regulations cover all recreational engines that are under 19 kW (25 hp) and have either an installed speed governor or a maximum engine speed less than 5,000 revolutions per minute (rpm). Recreational vehicles currently covered by the Small SI standards include go-carts, golf carts, and small mini-bikes. Although some off-highway motorcycles, ATVs and snowmobiles have engines with rated horsepower less than 19 kW, they all have maximum engine speeds greater than 5,000 rpm. Thus they have not been included in the Small SI regulations. The only other types of small recreational engines not covered by the Small SI rule are those engines under 19 kW that aren't governed and have maximum engine speed of at least 5,000 rpm. There are relatively few such vehicles with recreational engines not covered by the Small SI regulations. The best example of vehicles that fit in this category are stand-on scooters and skateboards that have been equipped with very small gasoline spark-ignition engines. The engines used on these vehicles are typically the same as those used in string trimmers or other lawn and garden equipment, which are covered under the Small SI regulations. Because these engines are generally already covered by the Small SI regulations and are the same as, or very similar to, engines as those used in lawn and garden applications, we are revising the Small SI rules to cover these engines under the Small SI regulations. To avoid any problems in transitioning to meet emission standards, we are applying these standards beginning in 2006. We did not receive any comments on this approach.

2. What Is the Regulatory History for Recreational Vehicles?

The California Air Resources Board (California ARB) established standards for off-highway motorcycles and ATVs, which took effect in January 1997 (1999 for vehicles with engines of 90 cc or less). California has not adopted standards for snowmobiles. The standards, shown in Table III.A–1, are based on the highway motorcycle chassis test procedures. Manufacturers may certify ATVs to optional standards, also shown in Table III.A–1, which are based on the utility engine test procedure.[38] This is the test procedure over which Small SI engines are tested. The stringency level of the standards was based on the emission performance of small four-stroke engines and advanced two-stroke engines with a catalytic converter. California ARB anticipated that the standards would be met initially by using high-performance four-stroke engines.

III.A–1—CALIFORNIA OFF-HIGHWAY MOTORCYCLE AND ATV STANDARDS FOR MODEL YEAR 1997 AND LATER

[1999 and later for engines at or below 90 cc]

	HC	NO_X	CO	PM
Off-highway motorcycle and ATV standards (g/km)	[a] 1.2		15	

[38] Notice to Off-Highway Recreational Vehicle Manufacturers and All Other Interested Parties Regarding Alternate Emission Standards for All-Terrain Vehicles, Mail Out #95–16, April 28, 1995, California ARB (Docket A–2000–01, document II–D–06).

	HC + NO_X	CO	PM
Optional standards for ATV engines below 225 cc (g/bhp–hr)	[a] 12.0	300	.....
Optional standards for ATV engines at or above 225 cc (g/bhp–hr)	[a] 10.0	300	.....

a Corporate-average standard.

California revisited the program because a lack of certified off-highway motorcycles from manufacturers was reportedly creating economic hardship for dealerships. The number of certified off-highway motorcycle models was particularly inadequate.[39] In 1998, California revised the program, allowing the uncertified products in off-highway vehicle recreation areas with regional/seasonal use restrictions. Currently, noncomplying vehicles may be sold in California and used in attainment areas year-round and in nonattainment areas during months when exceedances of the state ozone standard are not expected. For enforcement purposes, certified and uncertified products are identified with green and red stickers, respectively. Only about one-third of off-highway motorcycles selling in California are certified. All certified products have four-stroke engines.

B. Engines Covered by This Rule

We are adopting new emission standards for new off-highway motorcycles, ATVs, and snowmobiles. (We are also applying existing Small SI emission standards to other recreational equipment, as described above.) The engines used in recreational vehicles tend to be small, air- or liquid-cooled, reciprocating Otto-cycle engines that operate on gasoline.[40] Engines used in vehicle applications experience engine performance that is characterized by highly transient operation, with a wide range of engine speed and load capability. Maximum engine speed are typically well above 5,000 rpm. Also, with the exception of snowmobiles, the vehicles are typically equipped with transmissions rather than torque converters to ensure performance under a variety of operating conditions.[41]

1. Two-Stroke vs. Four-Stroke Engines

The engines used by recreational vehicles can be separated into two distinct designs: two-stroke and four-stroke. The distinction between two-stroke and four-stroke engines is important for emissions because two-stroke engines tend to emit much greater amounts of unburned HC and PM than four-stroke engines of similar size and power. Two-stroke engines have lower NO_X emissions than do four-stroke engines because they experience a significant amount of internal exhaust gas recirculation resulting from exhaust gases being drawn back into the combustion chamber on the piston's downward stroke while the exhaust port is uncovered. Exhaust gas is inert and displaces fresh fuel and air that could otherwise be combusted, which creates lower in-cylinder temperatures and thus less NO_X. Two-stroke engines also have greater fuel consumption than four-stroke engines, but they also tend to have higher power output per-unit displacement, lighter weight, and better cold-starting performance. These, and other characteristics, tend to make two-stroke engines popular as a power unit for recreational vehicles. With the exception of a few youth and touring models, almost all snowmobiles use two-stroke engines. Currently, about 63 percent of all off-highway motorcycles (predominantly in high-performance, youth, and entry-level bikes) and 20 percent of all ATVs sold in the United States use two-stroke engines.

The basis for the differences in engine performance and exhaust emissions between two-stroke and four-stroke engines can be found in the fundamental differences in how two-stroke and four-stroke engines operate. Four-stroke operation takes place in four distinct steps: intake, compression, power, and exhaust. Each step corresponds to one up or down stroke of the piston or 180° of crankshaft rotation. The first step of the cycle is for an intake valve in the combustion chamber to open during the intake stroke, allowing a mixture of air and fuel to be drawn into the cylinder while the piston moves down the cylinder. The intake valve then closes and the momentum of the crankshaft causes the piston to move back up the cylinder, compressing the air and fuel mixture. At the very end of the compression stroke, the air and fuel mixture is ignited by a spark from a spark plug and begins to burn. As the air and fuel mixture burns, increasing temperature and pressure cause the piston to move back down the cylinder. This is referred to as the ''power'' stroke. At the bottom of the power stroke, an exhaust valve opens in the combustion chamber and as the piston moves back up the cylinder, the burnt gases are pushed out through the exhaust valve to the exhaust manifold, and the cycle is complete.

In a four-stroke engine, combustion and the resulting power stroke occur only once every two revolutions of the crankshaft. In a two-stroke engine, combustion occurs every revolution of the crankshaft. Two-stroke engines eliminate the intake and exhaust strokes, leaving only compression and power strokes. This is due to the fact that two-stroke engines do not use intake and exhaust valves. Instead, they have intake and exhaust ports in the sides of the cylinder walls. With a two-stroke engine, as the piston approaches the bottom of the power stroke, it uncovers exhaust ports in the wall of the cylinder. The high pressure combustion gases blow into the exhaust manifold. As the piston gets closer to the bottom of the power stroke, the intake ports are uncovered, and fresh mixture of air and fuel are forced into the cylinder while the exhaust ports are still open. Exhaust gas is ''scavenged'' or forced into the exhaust by the pressure of the incoming charge of fresh air and fuel. In the process, however, some mixing between the exhaust gas and the fresh charge of air and fuel takes place, so that some of the fresh charge is also emitted in the exhaust. Losing part of the fuel out of the exhaust during scavenging causes very high hydrocarbon emission characteristics of two-stroke engines. The other major reason for high HC emissions from two-stroke engines is their tendency to misfire under low-load conditions due to greater combustion instability.

2. Applicability of Small SI Regulations

In our regulations for Small SI engines, we established criteria, such as rated engine speed at or above 5,000 rpm and the use of a speed governor, that excluded engines used in certain types of recreational vehicles (see 40 CFR 90.1(b)(5)). Engines used in some other types of recreational vehicles may be covered by the Small SI standards, depending on the characteristics of the engines. For example, lawnmower-type

[39] Initial Statement of Reasons, Public Hearing to Consider Amendments to the California Regulations for New 1997 and Later Off-highway Recreational Vehicles and Engines, California ARB, October 23, 1998 (Docket A–2000–01, document II–D–08).

[40] Otto-cycle is another name for a reciprocating, internal-combustion engine that uses a spark to ignite a homogeneous air and fuel mixture, in which air-fuel mixing may occur inside or outside the combustion chamber.

[41] Snowmobiles use continuously variable transmissions, which tend to operate like torque converters.

engines used in go carts are typically covered by the Small SI standards because they don't operate above 5000 rpm. Similarly, engines used in golf carts are included in the Small SI program. As discussed above, we are revising the Small SI regulations to include all recreational engines except those in off-highway motorcycles, ATVs, snowmobiles, and hobby engines. Golf cart and go-cart engines will remain in the Small SI program because the vehicles are not designed for operation over rough terrain and do not meet the definition of ATV. We are accordingly removing the 5,000 rpm and speed governor criteria from the applicability provisions of the Small SI regulations.

3. Utility Vehicles

We proposed to define ATV as a ''nonroad vehicle with three or more wheels and a seat designed for operation over rough terrain and intended primarily for transportation'', and that it would include ''both land-based and amphibious vehicles''. We requested comment on the proposed definition and based on comments, we are modifying the definition to clearly exclude utility vehicles not capable of reaching 25 mph. Utility vehicles differ from ATVs in several ways. As stated earlier, an ATV is operated and ridden very similar to a motorcycle, with the rider straddling the seat and using handlebars to steer the vehicle. The throttle and brakes are located on the handle bars, similar to a motorcycle and snowmobile. Utility vehicles look and operate very similarly to golf carts. The operator sits on a bench seat with a back support that holds two or more passengers. Rather than handlebars, utility vehicles use a steering wheel and have throttle and brake pedals on the floor, similar to an automobile. Utility vehicles also typically have a cargo box or bed (similar to that found on a pick-up truck) used for hauling cargo. We define an off-highway utility vehicle as a ''nonroad vehicle that has four or more wheels, seating for two or more persons, is designed for operation over rough terrain, and has either a rear payload of 350 pounds or more or seating for six or more passengers.'' We are requiring utility vehicles capable of high speed operation (speeds greater than 25 mph) to meet ATV standards. For utility vehicles that are permanently governed and not capable of reaching 25 mph, manufacturers must either continue to certify them to the Small SI standards (or Large SI standards, if applicable) or optionally certify them to the new ATV standards.

We received comments from the Outdoor Power Equipment Institute (OPEI) that the definition should be clarified to exclude utility vehicles. Most utility vehicles are equipped with engines that are currently required to meet EPA Small SI standards. OPEI commented that utility vehicles are designed specifically for work related tasks and are equipped with seating for passengers, a bed for cargo, and riding-mower-style controls.

The industry differentiates between utility vehicles based on vehicle speed. The vast majority of utility vehicles are considered ''low-speed utility vehicles'' (LUVs) and are vehicle speed governed with maximum speed of less than 25 mph. The engines used in such vehicles are generally below 25 hp and are typically used in other lawn and garden or utility applications such as generators or lawn tractors. The engines differ significantly from those used in recreational products which are designed for higher rpm operation with an emphasis on higher performance. OPEI also provided comment on a newer type of utility vehicle, which uses a more powerful (over 19kW) ATV-based engine and is capable of speeds of up to 40 mph.

We are finalizing the approach described. The engines used in low-speed utility vehicles are more similar in design and use to utility engines than ATVs. The engines used to power these vehicles are often used in other utility applications, such as lawn and garden tractors and generators and are typically produced by companies that specialize in utility and lawn equipment rather than power sport vehicles. These products are already certified to the Small SI standards.

However, we have some concerns with continuing to use the Small SI program test cycle for engines used in applications that operate at broad engine speeds. The cycle was developed primarily for push lawnmowers and other equipment that operates in a narrow band of engine speeds. The Small SI test cycle measures emissions only at a single high engine speed. We are concerned that the Small SI test cycle may not achieve the same emission reductions for off-highway utility vehicles in use as it would for lawnmowers, especially as more stringent standards go into effect. The concern also applies to other large ride-on equipment in the Small SI program, such as riding lawn mowers, where engine speed is inherently variable. While the ATV program may not be appropriate for these low-speed utility applications due to operating and design differences, the Small SI program as it is currently designed may not be completely appropriate either. Since we did not propose changes for the Small SI program which currently applies to utility vehicles and need to further study the issues, we are not finalizing such changes to the Small SI program in this Final Rule. We plan to continue to study the issue and, if necessary, address it through a future rulemaking for the Small SI program.

In addition to test cycle, there are other reasons we plan to continue to examine the appropriateness of the Small SI program for large ride-on equipment. With respect to useful life, we are concerned that off-highway utility vehicles may be designed to last significantly longer than the typical lawnmower. 40 CFR 90.105 specifies useful life values that vary by application with the longest useful life being 1000 hours. It is not clear that this maximum value is high enough to address the expected life of in-use off-highway utility vehicles, especially those that are used commercially. Finally, with respect to the level of the standards, we are concerned about the relative stringency of the Small SI standards relative to the long-term standards for ATVs and other nonroad vehicles. Nevertheless, given the low-speed operation of these vehicles, and other differences, we do not believe that they should be treated the same as higher speed ATVs. We did not propose changes for the Small SI program to address the above issues and need to study them further. However, these vehicles are unique in many ways, and should be addressed in a future rulemaking.

Given the utility nature of the low-speed vehicles, we believe that at least for now, it is appropriate to continue to certify them under 40 CFR part 90. For vehicles capable of higher speeds (*e.g.*, greater than 25 mph), the engine designs and vehicle in-use operation is likely to be more like ATVs. The test procedures and standards for ATVs will better fit these high speed vehicles than those in the Small SI program. For regulatory purposes, we are defining an off-highway utility vehicle as a nonroad vehicle that has four or more wheels, seating for two or more persons, is designed for operation over rough terrain, and has either a rear payload capacity of 350 pounds or more or total seating for six or more passengers.

4. Hobby Engines

The Small SI rule categorized spark-ignition engines used in model cars, boats, and airplanes as recreational engines and exempted them from the

Small SI program.[42] We are continuing to exclude hobby engines from the Small SI program because of significant engine design and use differences. We also believe that hobby engines are substantially different than engines used in recreational vehicles and, as proposed, we are not including spark-ignition hobby engines in this final rule. We received no comment on our proposed treatment of hobby engines or any additional information on their design or use.

There are about 8,000 spark-ignition engines sold per year for use in scale-model aircraft, cars, and boats.[43] This is a very small subsection of the overall model engine market, most of which are glow-plug engines that run on a mix of castor oil, methyl alcohol, and nitro methane.[44] A typical spark-ignition hobby engine is approximately 25 cc with a horsepower rating of about 1–3 hp, though larger engines are available. These spark-ignition engines are specialty products sold in very low volumes, usually not more than a few hundred units per engine line annually. Many of the engines are used in model airplanes, but they are also used in other types of models such as cars and boats. These engines, especially the larger displacement models, are frequently used in competitive events by experienced operators. The racing engines sometimes run on methanol instead of gasoline. In addition, the engines are usually installed and adjusted by the hobbyist who selects an engine that best fits the particular model being constructed.

The average annual hours of operation has been estimated to be about 12.2 hours per year.[45] The usage rate is very low compared to other recreational or utility engine applications due to the nature of their use. Much of the hobby revolves around building the model and preparing the model for operation. The engine and model must be adjusted, maintained, and repaired between uses.

Spark-ignition model engines are highly specialized and differ significantly in design compared to engines used in other recreational or utility engine applications. While some of the basic components such as pistons may be similar, the materials, airflow, cooling, and fuel delivery systems are considerably different.[46] [47] Some spark-ignition model engines are scale replicas of multi-cylinder aircraft or automobile engines and are fundamentally different than spark-ignition engines used in other applications. Model-engine manufacturers often select lighter-weight materials and simplified designs to keep engine weight down, often at the expense of engine longevity. Hobby engines use special ignition systems designed specifically for the application to be lighter than those used in other applications. To save weight, hobby engines typically lack pull starters that are found on other engines. Hobby engines must be started by spinning the propeller. In addition, the models themselves vary significantly in their design, introducing packaging issues for engine manufacturers.

We are not including spark-ignition hobby engines in the recreational vehicles program. The engines differ significantly from other recreational engines in their design and use, as noted above. Emission-control strategies envisioned for other recreational vehicles may not be well suited for hobby engines because of their design, weight constraints, and packaging limitations. Approaches such as using a four-stroke engine, a catalyst, or fuel injection all would involve increases in weight, which would be particularly problematic for model airplanes. The feasibility of these approaches for these engines is questionable. Reducing emissions, even if feasible, would likely involve fundamental engine redesign and substantial R&D efforts. The costs of achieving emission reductions are likely to be much higher per engine than for other recreational applications because the R&D costs would be spread over very low sales volumes. The cost of fundamentally redesigning the engines could double the cost of some engines.

By contrast, because of their very low sales volumes, annual usage rates, and relatively short engine life cycle, spark-ignition hobby engine emission contributions are extremely small compared to recreational vehicles. The emission reductions possible from regulating such engines would be minuscule (we estimate that spark-ignition hobby engines as a whole account for less than 30 tons of HC nationally per year, much less than 0.01 percent of mobile source HC emissions).[48]

In addition, hobby engines differ significantly in their in-use operating characteristics compared to small utility engines and other recreational vehicle engines. It is unclear if the test procedures developed and used for other types of spark-ignition engine applications would be sufficiently representative or even technically practical for hobby engines. We are not aware of any efforts to develop an emission test cycle or conduct any emission testing of these engines. Also, because installing, optimizing, maintaining, and repairing the engines are as much a part of the hobby as operating the engine, emission standards could fundamentally alter the hobby itself. Engines with emission-control systems would be more complex and the operator would need to be careful not to make changes that would cause the engine to exceed emission standards. EPA will continue to review these issues, as necessary, in the future and reconsider adoption of regulations if appropriate.

5. Competition Exemptions

a. Off-Highway motorcycles. Currently, a large portion of off-highway motorcycles are designed as competition/racing motorcycles. These models often represent a manufacturer's high-performance offerings in the off-highway market. Most such motorcycles are of the motocross variety, although some high-performance enduro models are marketed for competition use.[49] [50] These high-performance motorcycles are

[42] 80 FR 24292, April 25, 2000.

[43] Comments submitted by Hobbico on behalf of Great Plains Model Distributors and Radio Control Hobby Trade Association, February 5, 2001, Docket A–2000–01, document II–D–58.

[44] Hobby engines with glow plugs are considered compression-ignition (diesel) engines because they lack a spark-ignition system and a throttle (see the definition of compression-ignition, 40 CFR 89.2). The nonroad diesel engine regulations 40 CFR part 89 generally do not apply to hobby engines, so these engines are unregulated.

[45] Comments submitted by Hobbico on behalf of Great Plains Model Distributors and Radio Control Hobby Trade Association, February 5, 2001, Docket A–2000–01, document II–D–58.

[46] E-mail from Carl Maroney of the Academy of Model Aeronautics to Christopher Lieske, of EPA, June 4, 2001, Docket A–2000–01, document II–G–144.

[47] Comments submitted by Hobbico on Behalf of Great Plains Model Distributors and Radio Control Hobby Trade Association, February 5, 2001, Docket A–2000–01, document II–D–58.

[48] For further information on the feasibility, emission inventories, and costs, see ''Analysis of Spark Ignition Hobby Engines'', Memorandum from Chris Lieske to Docket A–2000–01, document II–G–144.

[49] A motocross bike is typically a high-performance off-highway motorcycle that is designed to be operated in motocross competition. Motocross competition is defined as a circuit race around an off-highway closed-course. The course contains numerous jumps, hills, flat sections, and bermed or banked turns. The course surface usually consists of dirt, gravel, sand, and mud. Motocross bikes are designed to be very light for quick handling and easy maneuverability. They also come with large knobby tires for traction, high fenders to protect the rider from flying dirt and rocks, aggressive suspension systems that allow the bike to absorb large amounts of shock, and are powered by high-performance engines. They are not equipped with lights.

[50] An enduro bike is very similar in design and appearance to a motocross bike. The primary difference is that enduros are equipped with lights and have slightly different engine performance that is more geared towards a broader variety of operation than a motocross bike. An enduro bike

largely powered by two-stroke engines, though some four-stroke models have been introduced in recent years.

Competition events for motocross motorcycles mostly involve closed-course or track racing. Other types of off-highway motorcycles, such as enduros and trials bikes, are usually marketed for trail or open-area use. When used for competition, these models are likely to be involved in point-to-point competition events over trails or stretches of open land. There are also specialized off-highway motorcycles that are designed for competitions such as ice racing, drag racing, and observed trials competition. A few races involve professional manufacturer-sponsored racing teams. Amateur competition events for off-highway motorcycles are also held frequently in many areas of the U.S.

Clean Air Act subsections 216 (10) and (11) exclude engines and vehicles ''used solely for competition'' from nonroad engine and nonroad vehicle regulations. In the proposal we stated that in previous nonroad engine emission-control programs, we have generally defined the term as follows:

Used solely for competition means exhibiting features that are not easily removed and that would render its use other than in competition unsafe, impractical, or highly unlikely.

Most motorcycles marketed for competition do not appear to have obvious physical characteristics that constrain their use solely to competition. In fact, they are usually sold by dealers from the showroom floor. Upon closer inspection, however, there are several features and characteristics for many competition motorcycles that make recreational use unlikely. For example, motocross bikes are not equipped with lights or a spark arrester, which prohibits them from legally operating on public lands (such as roads, parks, state land, and federal land).[51] Vehicle performance of modern motocross bikes is so advanced (for example, with extremely high power-to-weight ratios and advanced suspension systems) that it is highly unlikely that these machines will be used for recreational purposes. In addition, motocross and other competition off-highway motorcycles typically do not come with a warranty, which further deters purchasing and using competition bikes for recreational operation.[52] We believe these features are sufficient in distinguishing competition motorcycles from recreational motorcycles. Therefore, we are specifically adopting the following features as indicative of motorcycles used solely for competition: *absence of a headlight or other lights; the absence of a spark arrester; suspension travel greater than 10 inches; an engine displacement greater than 50 cc; absence of a manufacturer warranty; and the absence of a functional seat.*

Manufacturers must specifically request and receive an exemption from EPA to sell off-highway motorcycles without a certificate under the competition exemption. Vehicles not meeting the applicable criteria listed above will be exempted only in cases where the manufacturer has clear and convincing evidence that the vehicles for which the exemption is being sought will be used solely for competition. Examples of this type of evidence may be technical rationale explaining the differences between a competition and non-competition motorcycle, marketing and sales information indicating the intent of the motorcycle for competition purposes, and survey data from users indicating the competitive nature of the motorcycle.

Although there are several features that generally distinguish competition motorcycles from recreational motorcycles, several parties have commented that they believe motorcycles designed for competition use are also used for recreational purposes, rather than solely for competition. This is of particular concern because competition motorcycles represent about 29 percent of total off-highway motorcycle sales or approximately 43,000 units per year. However, a study on the characterization of off-highway motorcycle usage found that there are numerous—and increasingly popular—amateur off-highway motorcycle competitions across the country, especially motocross.[53] The estimated number of off-highway motorcycle competitors is as high as 80,000. Since it is very common for competitive riders to replace their machines every one to two years, the sale of 43,000 off-highway competition motorcycles appears to be a reasonable number, considering the number of competitive participants. We are therefore confident that, although we are excluding a high percentage of off-highway motorcycles as being competition machines, the criteria laid out above are indicative of motorcycles used solely for competition.

However, we do recognize that it is possible that some competition motorcycles will be used for recreational purposes. We are therefore adopting a provision within the regulations that allows the Agency to deny a manufacturer's claim for exemption from the standards for any models, including models that meet the six specified criteria, where other information is available that indicates these off-highway motorcycle models are not used solely for competition. This same provision allows the Agency to deny claims for exemptions in later years even if they had been granted previously. Examples of this type of information can be state registration data that indicate a significant number of competition exempt models being registered to operate on public lands. Off-highway competition motorcycles designed for motocross competition are not typically required to be registered with states, since most motocross competitions occur on closed-circuit courses on private, not public land, and motocross machines lack spark arresters which are required to operate on public land. We believe the possibility of losing an exemption for competition motorcycles will encourage manufacturers to take proper actions in promoting, marketing, and guaranteeing that competition machines are sold to those individuals who will use them solely for competition.

b. *Snowmobiles and ATVs.* Snowmobiles and ATVs are also used in competition events; however, the percentage of snowmobiles or ATVs used solely for competition is not nearly as large as that for off-highway motorcycles. Since snowmobile and ATV competition have typically not been as popular as off-highway motorcycle competitions, there has not been the demand for competition machines that exists with off-highway motorcycles. As a result, manufacturers have not manufactured and sold directly from their dealers competition snowmobiles and ATVs like they have off-highway motorcycles. Most snowmobiles and ATVs used in competition events are modified recreational vehicles, rather than stock racing machines bought directly from the dealer, as is the case with off-highway motorcycles. As a result, there isn't the same concern over potential misuse of competition snowmobiles and ATVs for recreational purposes.

needs to be able to cruise at high speeds as well as operate through tight woods or deep mud.

[51] A spark arrester is a device located in the end of the tailpipe that catches carbon sparks coming from the engine before they get out of the exhaust system. This is important when a bike is used off-highway, where hot carbon sparks falling in grassy or wooded areas could result in fires.

[52] Most manufacturers of motocross racing motorcycles do not offer a warranty. Some manufacturers do, however, offer very limited (1 to 3 months) warranties under special conditions.

[53] ''Characterization of Off-Road Motorcycle Use,'' ICF Consulting, September 2001, A–2000–1 document II–A–81.

Competition snowmobiles and ATVs aren't currently sold directly at the dealership. Therefore, manufacturers can receive a competition exemption from EPA for snowmobiles and ATVs meeting all of the following criteria: *the vehicle or engine may not be displayed for sale in any public dealership; sale of the vehicle must be limited to professional racers or other qualified racers; and the vehicle must have performance characteristics that are substantially superior to noncompetitive models.*

As with off-highway motorcycles, snowmobiles and ATVs not meeting the applicable criteria listed above will be exempted only in cases where the manufacturer has clear and convincing evidence that the vehicles for which the exemption is being sought will be used solely for competition. We are also adopting the same provision as for off-highway motorcycles within the regulations that allows the Agency to deny a manufacturer's claim for exemption from the standards for any models where other information is available that indicates these snowmobiles and ATVs models are not used solely for competition. As with off-highway motorcycles, this same provision allows the Agency to deny claims for exemptions in later years even if they had been granted previously.

C. Emission Standards

1. What Are the Emission Standards and Compliance Dates?

a. Off-highway motorcycles. We are adopting HC plus NO_X and CO standards for off-highway motorcycles. We expect the largest benefit to come from reducing HC emissions from two-stroke engines. Two-stroke engines have very high HC emission levels. Baseline NO_X levels are relatively low for engines used in these applications and therefore including NO_X in the standard serves only to cap NO_X emissions for these engines. Comparable CO reductions can be expected from both two-stroke and four-stroke engines, as CO levels are similar for the two engine types. We are also adopting averaging, banking and trading provisions for off-highway motorcycles, as discussed below.

In the current off-highway motorcycle market, consumers can choose between two-stroke and four-stroke models in most sizes. Each engine type offers unique performance characteristics. Some manufacturers specialize in two-stroke or four-stroke models, while others offer a mix of models. The HC standard is likely to be a primary determining factor for what technology manufacturers choose to employ to meet emission standards overall. HC emissions can be reduced substantially by switching from two-stroke to four-stroke engines. Four-stroke engines are very common in off-highway motorcycle applications. Approximately 55 percent of non-competition off-highway motorcycles are four-stroke. Certification results from California ARB's emission-control program for off-highway motorcycles, combined with our own baseline emission testing, provides ample data on the emission-control capability of four-stroke engines in off-highway motorcycles. Off-highway motorcycles certified to California ARB standards for the 2000 model year have HC certification levels ranging from 0.4 to 1.0 g/km. These motorcycles have engines ranging in size from 48 to 650 cc; none of these use catalysts.

The emission standards for off-highway motorcycles take effect beginning in the 2006 model year. We will allow a phase-in of 50-percent implementation in the 2006 model year with full implementation in 2007. These standards apply to testing with the highway motorcycle Federal Test Procedure (FTP) test cycle. For HC+NO_X emissions, the standard is 2.0 g/km (3.2 g/mi). For CO emissions, the standard is 25.0 g/km (40.5 g/mi). Both of these standards are based on averaging with a cap on the Family Emission Limit (FEL) of 20 g/km for HC+NO_X and 50 g/km for CO. Banking and trading provisions are also included in the program, as described in Section III.C.2. These emission standards allow us to set near-term requirements to introduce the low-emission technologies for substantial emission reductions with minimal lead time. We expect manufacturers to meet these standards using four-stroke engines with some low-level modifications to fuel-system calibrations. These systems are similar to those used for many years in highway motorcycle applications, but with less overall sophistication for off-highway applications.

We received comments from several states and environmental groups encouraging us to harmonize our off-highway motorcycle standards with California. The comments focused on the perceived difference in stringency between the two programs. For California, the standard is an HC-only standard of 1.2 g/km. Our standard is a HC+NO_X standard of 2.0 g/km. We believe it is prudent to set a HC+NO_X standard in lieu of a HC-only standard since the main emission-control strategy is expected to be the use of four-stroke engines in lieu of two-stroke engines. Two-stroke engines emit extremely low levels of NO_X. Four-stroke engines, on the other hand, have higher NO_X emission levels, in the range of 0.3 g/km on average. This is part of the reason why we proposed a somewhat higher numeric standard compared to California.

The California standards, which were adopted in 1994, were stringent enough that manufacturers were unable to certify several models of off-highway motorcycles, even some with four-stroke engine technology. The result was a substantial shortage of products for dealers to sell in California. The shortage led California to change their program to allow manufacturers to sell noncompliant off-highway motorcycles under some circumstances. As a result, approximately a third of the off-highway motorcycles sold in California are compliant with the standards. The uncertified models being sold in California include both two-stroke and four-stroke machines.

EPA received comments from dealers and consumers concerned that a similar shortage could arise nationwide if EPA adopted the California standards. EPA shared this concern and proposed standards that were somewhat less stringent than that of California, based on test data from high-performance four-stroke machines. We are finalizing this approach to ensure the four-stroke technology can be implemented broadly across the product line in the 2006 time-frame. Although the approach we are finalizing contains somewhat less stringent standards than the California program, we believe it will achieve reductions beyond that of the California program because more products will be certified (even when the competition exemption is taken into account). The vast majority of the HC reductions achieved by the program come from shifting away from conventional two-stroke engines which have HC emissions levels in the range of 35 g/km. The 2.0 g/km standard represents about a 95-percent reduction in emissions for these vehicles.

If we were to go beyond this level of reduction, manufacturers would need to employ on a widespread basis additional technology that presents significant technical issues concerning their application to off-highway motorcycles given their extreme usage patterns and issues such as safety, packaging, and weight. For example, technologies such as electronic fuel injection and secondary air injection raise concerns about their durability and reliability in the harsh operating environments to which off-highway motorcycles are sometimes exposed.

The use of catalytic converters poses concerns over packaging, durability and safety. Off-highway motorcycles are very light and narrow. These attributes are necessary for operating through tight forest trails and other harsh conditions. This leaves little room for packaging a catalyst so that it won't be damaged from engine vibration, shock resulting from jumps and hopping logs, and falling over and hitting objects, such as trees and rocks. These technologies may become compatible for off-highway motorcycles in the future, but we do not believe that it is appropriate to promulgate emission standards based on these technologies at this time, given the technical problems currently associated with their use. Four-stroke engine technology has advanced considerably since the California regulations went into effect. Manufacturers are now capable of offering four-stroke engines that provide excellent performance. This performance can be achieved only as long as manufacturers are allowed to operate four-stroke engines with a slightly rich air and fuel mixture, which can result in somewhat higher HC and CO emissions. Although the standards we are setting are higher than those in California, we believe they will require four-stroke engines that are well calibrated for emissions control without significantly sacrificing performance. For these reasons, we believe the standards we are establishing are appropriate.

As discussed above in Section III.B.5, the Clean Air Act requires us to exempt from emission standards off-highway motorcycles used for competition. We expect several competition two-stroke off-highway motorcycle models to continue to be available. We are concerned that setting standards as stringent as California's would result in a performance penalty for some four-stroke engines that would be unacceptable to the consumers. This could encourage consumers who want performance-oriented off-highway motorcycles to purchase competition vehicles (and use them recreationally) in lieu of purchasing compliant machines that don't provide the desired performance. We believe that our emission standards will allow the continued advancement of four-stroke technology and properly considers available emission-control technology while taking vehicle performance into consideration and avoiding significant adverse impacts on performance.

As proposed, we are also finalizing an option allowing off-highway motorcycles with an engine displacement of 50 cc or less to be certified using the Small SI emission standards for non-handheld Class I engines. These youth-oriented models may not be able to operate over the FTP due to the higher speeds of the test cycle. We did not receive comment on this provision.

Optional Standards

During the comment period, we received several comments expressing concern that our proposed standard of 2.0 g/km HC+NO_X for off-highway motorcycles would effectively prohibit the use of two-stroke engines in non-competition applications. These engines currently have typical HC+NO_X levels of about 35 g/km. The commenters argued that two-stroke engines possess several unique attributes, such as high power and light weight, that make two-stroke powered off-highway motorcycles more desirable to some operators, especially smaller, lighter riders, than heavier four-stroke powered off-highway motorcycles.

We also received comments from several states and environmental organizations expressing strong concern over the number of competition off-highway motorcycles that would be exempt from our regulations as a result of our competition exemption. They felt that people purchasing exempt competition motorcycles would use them for recreational purposes instead of solely for competition.

One manufacturer indicated that they were planning on building high-performance off-highway motorcycles equipped with direct fuel-injection two-stroke engines that would potentially be capable of meeting a HC+NO_X standard of 4.0 g/km. To enable use of this technology, they suggested that we should adopt a standard of 4.0 g/km instead of the proposed standard of 2.0 g/km. The commenter believes that direct injection could be used to make clean competition machines and also argued that the technology is robust and not as susceptible to user modifications as other technologies such as catalysts. The commenter wanted an opportunity to develop and certify their product because it perceives a benefit to the purchaser not only in performance but also in the ability for the owner to resell the competition vehicle into the secondary market without concerns about potential misuse. In addition, the owner would be able to use the vehicle both for competition and recreation.

It is clear that if manufacturers were able to certify and bring to market clean competition machines as described by the commenter, significant reductions in emissions would be gained over conventional two-stroke technology. Some competition models we tested had baseline HC and CO emissions in excess of 50 g/km and 40 g/km, respectively. We believe it is appropriate to provide an avenue for the development and voluntary certification of clean competition motorcycles. Therefore, we are finalizing an optional set of standards for off-highway motorcycles of 4.0 g/km HC+NO_X and 35.0 g/km CO. For manufacturers to utilize this option, however, they must certify all of their models, including their competition models, to the optional standards. To qualify for this option, a manufacturer must show that ten percent or more of their sales would otherwise meet the competition definition.

The optional standard was derived from the fact that non-competition four-stroke engines can meet a 2.0 g/km level and competition two-stroke machines with advanced direct fuel-injection technology could meet a 8.0 g/km level. Since approximately one-third of the total off-highway motorcycle fleet are competition machines and the other two-thirds would be non-competition four-stroke recreational machines, the weighting of the 2.0 g/km level by two-thirds and the 8.0 g/km level by one-third results in a weighted standard of 4.0 g/km. This presumes that emissions from four-stroke engines will not increase under this option and that non-competition engines will be almost exclusively four-stroke engines. These assumptions are discussed below. The significant reductions in otherwise unregulated competition engines means that this option should produce even greater overall reductions than the base 2.0 g/km standard. We recognize that for some manufacturers this program will increase opportunities to make a limited number of non-competition recreational two-stroke machines; however, we believe that the number of two-stroke non-competition engines developed under this program will be limited by the fact that the required technology (direct fuel-injection) would be too expensive and complex for the recreational motorcycle market. The majority of non-competition recreational off-highway motorcycles that use two-stroke engines are entry-level and youth motorcycles, where cost and simplicity are important factors. There is also the fact that for every two stroke non-competition engine manufactured under this program, a manufacturer must make one less competition engine or must make more four-stroke engines. Further, we believe that any increase in the number of non-competition two-stroke engines is justified given the fact that this program will overall bring levels from off-highway engines down

considerably and the fact that the technology needed to reduce emissions from competition machines will only be made available and used if, under this optional approach, manufacturers have an incentive to use the technologies.

One major incentive in using this approach is the fact that once these machines are certified, a consumer will be able to use these machines legally for non-competition uses, which increases the value of the competition machines. This approach thus will also reduce the incentive for manufacturers to manufacturer all of their two-stroke machines as competition machines to avoid regulation, and thus reduce the incentive for users to circumvent the regulations. This may mean that any increase in two-stroke non-competition engines under this approach would not lead to an increase in total two-stroke sales, because manufacturers will not have an incentive to increase the number of two-stroke competition vehicles to avoid regulation.

We believe this approach is responsive to all of the above comments. It directly addresses the concerns of the manufacturer developing the new competition motorcycle and also helps address the concerns of users, states, and environmental groups. The successful development and certification of clean competition models increases the choices for consumers in the marketplace. Offered the option of a certified high-performance two-stroke off-highway motorcycle that can be used both for competition and recreation, consumers may not feel the need to purchase exempt competition motorcycles. This option has the potential to significantly decrease the number of conventional two-stroke competition machines sold under the competition exemption and is likely to decrease the potential for misuse of competition machines. Conventional competition two-stroke motorcycles generate extremely high levels of HC emissions, as noted above. For every conventional two-stroke competition machine replaced by a certified competition machine, HC emissions would be reduced by 80 percent, or more.

While the 4.0 g/km standard is higher than the 2.0 g/km standard contained in the base program, we do not expect any loss in emissions reductions from four-stroke models. We continue to believe most off-highway motorcycles will continue to be powered by four-stroke engines. Most non-competition off-highway motorcycles are already four-stroke motorcycles, and the trend towards four-stroke is continuing even in the absence of these regulations. We are convinced that there will be no backsliding of emissions control for motorcycles using four-stroke engines, because the dirtiest of the four-stroke models tend to be competition machines, and our emissions testing indicates that competition four-stroke off-highway motorcycles have $HC+NO_X$ emission levels below 2.0 g/km. Since these motorcycles are optimized for power and racing conditions, there is no incentive for manufacturers to increase $HC+NO_X$ emissions from their current levels. In fact, increasing the emission levels would mean increasing the air-to-fuel mixture, which would tend to reduce the engines performance.

As with the primary program, these optional standards would take effect in 2006 with 50-percent implementation and full implementation in 2007 and manufacturers could switch between the options from model year to model year. The $HC+NO_X$ standard can be met through averaging with some families certified above the standards and some below. If averaging is used, the FEL cap would be 8.0 g/km.

We are retaining the averaging approach for this option because it may be a critical flexibility for manufacturers pursuing clean competition products. The commenter based its recommendation for a 4.0 g/km standard on their projections for a single prototype model equipped with a medium sized engine. This engine is in the early stages of development and there is some uncertainty as to what emissions level the final product can achieve. Also, manufacturers may want to apply their approach to other engines that may not be able to achieve this same level of control. Manufacturers could find that they can produce competition products that are very clean relative to the baseline but with higher emissions than 4.0 g/km. For example, larger engine sizes could have emissions levels somewhat higher than the 4.0 g/km suggested by the commenter. We are not satisfied at this time that two-stroke off-highway motorcycles, particularly those used in competition could meet the 4.0 g/km standard, especially considering the special performance needs of competition motorcycles. Therefore, rather than keeping a 2.0 g/km standard for four-stroke engines and having a standard higher than 4.0 g/km for two-stroke engines (a standard as high as 8.0 g/km might be appropriate), we are using a 4.0 g/km standard that permits averaging. Averaging provides flexibility for manufacturers to bring cleaner two-stroke, particularly cleaner competition two-stroke, engines to market without creating a disincentive to building four-stroke engines. One way of taking advantage of the averaging program in this way would be for a manufacturer to maximize its sales of four-stroke models as part of its sales mix, and average the emissions from these engines against the higher emissions of the two-stroke competition engines which still would need to be much cleaner than if they were unregulated. This approach therefore requires the substantial use of cleaner four-stroke technologies while at the same time encouraging manufacturers to substantially reduce emissions from motorcycles that would otherwise be unregulated competition motorcycles. We have capped the emissions levels at 8.0 g/km $HC+NO_X$ because we want to ensure that products certified under this option provide large emissions reductions compared to baseline levels and that the option provides environmental benefits in all cases. Competition motorcycles certified to the 8.0 g/km level would continue to provide over a 75-percent reduction in HC emissions over baseline levels.

One of the challenges facing manufacturers selecting this option is the potentially high CO emissions from competition machines. We tested competition models and found CO emissions to be in the range 25 to 50 g/km. Although this option contains a somewhat higher CO standard (35 g/km compared to 25 g/km) than the base program, manufacturers are still expected to need to control CO emissions through tight engine calibrations. We are not including averaging for the less stringent CO standard. As noted by the manufacturer supporting the 4.0 g/km option, direct injection technology is likely to reduce CO from two-stroke engines. We believe that through proper calibration, the 35 g/km standard will be achievable and will not significantly impede manufacturers in selecting this option.

b. ATVs. We are adopting HC plus NO_X and CO standards for ATVs. We expect the largest benefit to come from reducing HC emissions from two-stroke engines. Two-stroke engines have very high HC emission levels. Baseline NO_X levels are relatively low for engines used in these applications and therefore including NO_X in these standards serves only to cap NO_X emissions for these engines. Comparable CO reductions can be expected from both two-stroke and four-stroke engines, as CO levels are similar for the two engine types. We are also adopting averaging, banking and trading provisions for ATVs, as discussed below.

In the current ATV market, consumers can choose between two-stroke and four-stroke models, although the

majority, approximately eighty-percent of sales, are four-stroke. Each engine type offers unique performance characteristics. Some manufacturers specialize in two-stroke or four-stroke models, but most manufacturers offer a mix of models. The HC standard is likely to be a primary determining factor for which technology manufacturers choose to employ to meet emission standards overall. HC emissions can be reduced substantially by switching from two-stroke to four-stroke engines. Certification results from California ARB's emission-control program for ATVs, combined with our own baseline emission testing, provides ample data on the emission-control capability of four-stroke engines in ATVs.

In the proposal we included two phases of ATV standards. The first phase of standards, 2.0 g/km HC+NO_X and 25 g/km CO, was proposed to be phased in at 50 percent of production in 2006 with the remainder phased-in for 2007. We proposed a second set of standards that included a more stringent 1.0 g/km HC+NO_X standard with no change to the CO standards. It was to be met in 2009/2010 using the same 50-percent and 100-percent phase-in scheme as Phase 1. We proposed that both phases of HC+NO_X standards could be met through averaging.

We received comments from several environmental groups stating that we should harmonize our Phase 1 standards with the California FTP-based standards. Manufacturers did not comment on the level of our proposed Phase 1 HC+NO_X standards. However, in a letter sent to the Agency in August 6, 2001, just before we published the proposal, the Motorcycle Industry Council stated that the most cost-effective approach to setting standards for ATVs would be to adopt the California HC standards of 1.2 g/km. They did comment on the fact that almost all of the CO nonattainment areas identified in the Draft Regulatory Support Document are now in compliance and that ATV activity is typically so far removed from congested urban areas, that we should delete the proposed CO standard.[54] Manufacturers stated generally that CO standards will make it more difficult to meet the HC+NO_X standards but did not provide additional specific comments on the feasibility or costs of the CO level proposed. In subsequent meetings with manufacturers, they suggested that if we were not going to delete the CO standard, it should be set sufficiently high so that it would not be an impediment to meeting the HC+NO_X standard. They suggested a level of 50.0 g/km.

We have decided to finalize only one set of HC+NO_X emission standards for the 2006 model year that are essentially equivalent to the California standard. The emission standards for ATVs take effect beginning in the 2006 model year. We will allow a phase-in of 50-percent implementation in the 2006 model year with full implementation in 2007. These standards apply to testing with the highway motorcycle Class I FTP test cycle. For HC+NO_X emissions, the standard is 1.5 g/km (2.4 g/mi). The California program has a HC-only standard of 1.2 g/km. We have made the standard 1.5 g/km to account for NO_X emissions. For CO emissions, we agree with manufacturers that CO standards can make it more difficult to meet the HC+NO_X standard. Based on our emission test data, we feel that a standard of 35.0 g/km (56.4 g/mi) is more appropriate than the 25.0 g/km standard we proposed or the 50.0 g/km standard suggested by the manufacturers. A standard of 35.0 g/km will still result in an overall reduction in CO emissions from high emitting ATVs, but will also allow manufacturers to balance CO control with the need to meet stringent NO_X levels. The HC+NO_X standard may be met through averaging. Banking and trading provisions for HC+NO_X are also being included in the program, as discussed in C.2., below.

Our decision to finalize a 1.5 g/km value rather than the 2.0 g/km value is consistent with the manufacturers technical capability in the 2006/2007 time-frame. The 1.5 g/km HC+NO_X and 35 g/km CO standards require the use of engine technology changes and add-on devices such as secondary air systems, which are clearly available for ATV application in this time frame. We proposed a 1.0 g/km HC+NO_X standard for a 2009/2010 phase-in which could require use of catalytic converter technology in many models of ATVs. As discussed below, we are not finalizing that proposal now, and thus find it appropriate to finalize more stringent Phase 1 standards which are technologically feasible and otherwise consistent with statutory criteria related to cost, safety, noise, and energy considerations.

Aligning our emission standards with those currently in place in California allows us to set requirements to introduce the low-emission technologies for substantial emission reductions with reasonable lead time and will for the most part allow manufacturers to sell one model in all fifty states. This ''harmonization'' between federal and California requirements is valued by industry because it allows the development and production of one emission-control technology per model/family. However, in a few cases, we expect emissions reductions under the EPA program that go beyond that of the California program because California allows the sale of uncertified ATVs, including two-stroke models, under their red sticker provisions. With the exception of competition exempt ATVs, all ATV models subject to the EPA program will need to be certified. We expect manufacturers to meet these standards using four-stroke engines with some modifications to fuel-system calibrations and some limited use of secondary air systems. These systems are similar to those used for many years in highway applications, but will likely require lesser sophistication than used in highway motorcycle applications.

In addition to being consistent with the California standards, we feel the 1.5 g/km HC+NO_X standard is more appropriate than the proposed 2.0 g/km standard because our testing has shown that emission levels from four-stroke ATVs can vary considerably. We stated in the proposed rule that a standard of 2.0 g/km HC+NO_X would be a four-stroke enforcing standard, which would most likely result in the elimination of any two-stroke engines, but not necessarily require any additional control from the four-stroke engines. As stated above, a standard of 1.5 g/km HC+NO_X will require the use of engine technology changes and add-on devices such as secondary air systems, which are clearly available for ATV application in this time frame.

At this point, we do not believe it is appropriate to promulgate Phase 2 standards. In the proposal, we projected significant use of secondary air systems and catalysts for meeting the Phase 2 standards. Since that time, we have been conducting testing on ATVs with the type of catalysts and secondary air systems we envisioned for the Phase 2 standards to demonstrate feasibility. However, the testing we have done to date has not been sufficient to reach an affirmative conclusion on the feasibility of the Phase 2 standards. Testing with secondary air systems and catalysts have not shown consistent results and we have had only partial success in demonstrating the feasibility of the proposed Phase 2 standards using these technologies. In testing on a utility-type ATV, these technologies have provided only small emissions reductions.[55] The

[54] We respond to these comments in Section II of the Summary and Analysis of Comments.

[55] Utility-type ATVs, it should be noted, are not the same as utility vehicles. Utility vehicles are not

Continued

results of our preliminary testing are discussed further in Section III.F and in the Final Regulatory Support Document. It is unclear if the level of technology we projected in the proposal would be sufficient to meet the Phase 2 standards. We have not done enough research or testing on other potential technologies, such as electronic or direct fuel injection, to finalize a decision based on these technologies. We plan to continue to evaluate the technologies that would be needed to meet the Phase 2 levels and determine if those levels can be met with the level of technology we projected in the proposal or with other technology. We also received comments that we underestimated costs for Phase 2 and we will continue to evaluate costs as well.

In addition, we received comments that the emissions inventories we projected for ATVs were too large, and that if we adjusted them appropriately, we would see that Phase 2 was not needed. This is provided in detail in the public docket.[56] We have studied and evaluated in-depth the new and additional information provided by the commenters after we published the proposal. As is shown in our revised analysis, the emissions inventory projections for ATVs have been reduced by more than 75 percent in response to the significant new information we received after publishing the proposal. Our analysis of the appropriate standards for 2006/2007 described above was made using this new information, and future analysis of Phase 2 standards would also use these revised inventory numbers. However, it is important to note that the revised inventories still show that these vehicles contribute to nonattainment.

Engine-based Standards

California allows ATVs to be optionally tested using the California ARB utility engine test cycle (SAE J1088) and procedures. In California, manufacturers using the J1088 engine test cycle option must meet the California Small Off-Road Engine emission standards. Some manufacturers do not have chassis testing facilities and at the time California finalized its program were concerned about the cost of doing FTP testing for California-only requirements. To use this option, manufacturers were required by California to submit some emission data from the various modes of the J1088 test cycles to show that emissions from these modes were comparable to FTP emissions. Although a good correlation was not found between the two test cycles, California allowed this option because the goal of their program was to encourage four-stroke engine technology in ATVs.

As described above, we are finalizing standards based on vehicle testing over the FTP that are essentially harmonized with the California FTP standards. We did not propose a permanent option of engine testing using J1088 due to strong concerns that the test cycle misses substantial portions of ATV operation because it contains test points at only one engine speed. We understand that vehicle testing would be a significant change for manufacturers who currently conduct emissions testing on the engine rather than the vehicle for California. Due to the costs and lead-time requirements associated with switching to vehicle-based testing, we proposed a transitional program to allow the J1088 option for models years 2006 through 2008. To facilitate the phase-in of ATV standards, we proposed to allow manufacturers to optionally certify ATVs using the California utility cycle and standards, shown in Table III.C–1, instead of the FTP standards.

TABLE III.C–1.—CALIFORNIA UTILITY ENGINE EMISSION STANDARDS

Engine displacement	$HC+NO_X$	CO
Less than 225 cc	12.0 g/hp-hr (16.1 g/kW-hr)	300 g/hp-hr (400 g/kW-hr)
Greater than 225 cc	10.0 g/hp-hr (13.4 g/kW-hr)	300 g/hp-hr (400 g/kW-hr)

We are finalizing this approach, but will eliminate the J1088 option (including both the test cycle and the utility engine emission standards) for certification in model year 2009. The last model year to use the J1088 cycle and emission standards is 2008. We received comments that the FTP is also not representative of ATV operation and that the J1088 option should remain available until a new test cycle and accompanying standards can be developed and made available to manufacturers. Although it may not be completely representative of ATV operation, we believe the FTP to be greatly superior to the J1088 test cycle because the cycle is transient, emissions are measured at a variety of speeds and it is more likely to result in robust emission-control designs that reduce emissions in-use. We continue to be very concerned that the vast majority of ATV operation is missed with the J1088 test because the engine is tested at only one engine speed. ATV operation is inherently transient in nature because the user controls the throttle position to vary vehicle speed. We believe the J1088 test is not sufficient to ensure robust emissions control development and use for ATVs. Given the choice of available test procedures for the long-term, we could not justify retaining the J1088 option.

For small displacement ATVs of 70 cc or less, we proposed that they would have the permanent option to certify to the proposed FTP-based ATV standards discussed above or meet the Phase 1 Small SI emission standards for non-handheld Class 1 engines. These standards are 16.1 g/kW-hr $HC+NO_X$ and 610 g/kW-hr CO. Manufacturers argued that ATVs with engine displacements between 70 cc and 99 cc also should be allowed to certify to the Small SI standards, since the differences between a 70 cc and 99 cc engine is very small and the ATVs equipped with 99

considered ATVs due to fundamental differences in the vehicle characteristics. Most utility vehicles are currently regulated by the Small SI program, with a small subset of utility vehicles required by the Final Rule to meet ATV standards. See section III.B.3. above, for a complete discussion of utility vehicles. When we say utility-type ATV, we are referring to ATVs that have features that are work related such as cargo racks. These ATVs are often somewhat larger and bulkier than sport models and may have transmissions geared more for work related tasks rather than for high performance. However, they have ATV features such as four low pressure tires, a seat designed to be straddled by the operator, handlebars for steering controls, and are intended for use by a single operator. These vehicle must meet ATV requirements.

[56] Comments of the Motorcycle Industry Council, Inc., and the Specialty Vehicle Institute of America on the Notice of Proposed Rulemaking to Establish Mandatory Emission Standards for Nonroad Large Spark-Ignition Engines and Recreational Engines (Marine and Land-Based), Air Docket A–2000–01, IV–D–214.

cc engines face the same obstacles with the FTP test cycle as the 70 cc and below ATVs. They also argued that the Phase 1 Small SI standards are too stringent for these engines and recommended that EPA adopt the Phase 2 standards for Class 1B engines of 40 g/kW-hr for HC+NO_X and 610 g/kW-hr for CO.

We recognize that the vast majority of engine families, including 4-stroke engines, below 100 cc are not certified to the California standards, which is an indication to us that the standards proposed may not be feasible for most engines in this size range given the lead time provided. However, manufacturers did not provide supporting data and we do not have data to confirm that the level recommended by the manufacturers would result in an appropriate level of control. We examined the 2002 model year certification data for non-handheld Small SI engines certified to the Phase 2 Class I–A and I–B engine standards (engines below 100 cc). We found that the five engine families certified to these standards had average emissions for HC+NO_X of about 25 g/kW-hr. All of these engine families had CO emissions below 500 g/kW-hr and well below the 610 g/kW-hr level recommended by manufacturers. We believe these levels are more representative of the levels that can be achieved with the lead time provided through the use of 4-stroke engines than the standards recommended by the manufacturers. Therefore, we are finalizing a 25.0 g/kW-hr HC+NO_X standard and a 500 g/kW-hr CO standard for ATVs with engine displacements of 99 cc or less. These standards will be optional to the FTP-based standards and, unlike the J–1088 standards option for larger displacement engines, the option will not expire. We are retaining averaging for the HC+NO_X standard but do not believe averaging would be appropriate for the CO standard. This is consistent with the approach outlined above for J–1088 standards for engines above 100 cc.

The ATV standards are phased in at 50% of a manufacturer's production in 2006 and 100% in 2007. This phase-in applies to a manufacturer's overall ATV production regardless engine size or which option a manufacturer chooses for standards for particular models.

New Test Procedure for ATVs

We are comfortable with retaining the FTP as the basis of the long-term ATV program. However, EPA understands the manufacturers' concerns regarding the additional facility costs associated with FTP testing for ATVs. We also recognize that this approach is a significant deviation from their current practice in the California program. Throughout the development of the final rule, we have met with manufacturers and the State of California and have discussed the possibility of developing a new test cycle for ATVs. We intend to work further with all interested parties to determine whether a new test cycle and accompanying standards is appropriate. The standards, if developed for the new test cycle, would be of equivalent stringency to the FTP standards discussed above. If we do propose a new test cycle and accompanying standards for ATVs, it is likely that we would do so in concert with a decision on whether a second phase of standards is appropriate for ATVs. We are now developing a Memorandum of Understanding with manufacturers which describes in detail the steps that will be taken in furtherance of this task.[57] Other interested parties including the state of California will also be invited to participate in this process.

By finalizing the temporary availability of J1088, we are providing time to develop, and if appropriate, finalize and implement an alternative to the FTP that meets both the needs of the Agency, manufacturers and other parties. This allows for our program to remain harmonized with California during the transition to the new test procedure. However, we do not support allowing the use of J1088 for a period any longer than necessary to make this transition. We expect that developing a new test cycle will be relatively straightforward and that the MOU process cited above will provide a road map of how we will proceed. We expect to initiate this effort next year and conclude the work on the new test cycle in enough time to promulgate it through rulemaking and to provide industry adequate lead time to implement it in an orderly manner (nominally three years lead time). If we encounter unforeseen and unavoidable delays or complications in this process, we will consider extending the J1088 temporarily as part of our process of adopting changes to the ATV test cycle through rulemaking. We would expect such an extension to be at most for one model year.

c. Snowmobiles. We are adopting CO and HC emission standards for snowmobiles, effective in three phases, as discussed below. As discussed below, we are also adopting an emissions averaging banking and trading program for snowmobiles which includes provisions for the early generation of credits prior to the effective date of the standards. We are not adopting PM standards for snowmobiles at this time, because limits on HC emissions will serve to simultaneously reduce PM and because there are significant complications in accurately measuring PM that make requiring PM standards difficult in this time frame. Finally, we are not adopting limits for NO_X for the first two phases of standards, but manufacturers are required to measure NO_X emissions and report them in the application for certification. However, we have included NO_X in the Phase 3 standards to effectively cap NO_X emissions from snowmobiles.

The three phases of standards we are adopting will require progressively broader application of advanced technologies such as direct injection two-stroke technology, and four stroke engines. Only about two percent of current snowmobile production utilizes these advanced technologies. We expect that about seven percent of new snowmobiles will have them by 2005. With the Phase 1 standards we expect that ten percent of snowmobiles will require advanced technologies (in addition to less advanced emissions controls on most other snowmobiles). We project that the Phase 2 and Phase 3 standards will require the application of advanced technology on 50 and 70 percent of new snowmobiles, respectively.

Phase 1 Standards

We are adopting Phase 1 standards largely as proposed for snowmobiles to take effect for all models starting in the 2006 model year. However, given that the manufacturers will effectively have only three years to design and certify snowmobiles prior to the 2006 model year, as well as the fact that snowmobiles are currently unregulated, we believe that requiring 100 percent of models to certify in 2006 is not reasonable. Thus, we are including a phase in of the Phase 1 standards with 50 percent of sales required to comply with the 30 percent reduction standards in 2006 and 100 percent compliance required in 2007. The standards of 275 g/kW-hr (205 g/hp-hr) for CO and 100 g/kW-hr (75 g/hp-hr) for HC are to be met on average by each manufacturer. As described in the proposal, these standards represent a 30-percent reduction from the baseline CO and HC emission rates for uncontrolled snowmobiles. We expect manufacturers to meet these standards using a variety of technologies and strategies across their product lines. For the reasons

[57] See item IV–G–114, docket A–2000–01.

described below, we believe these are the most stringent standards feasible beginning in the 2006 model year.

Snowmobiles pose some unique challenges for implementing emission-control technologies and strategies. Snowmobiles are very sensitive to weight, power, and packaging constraints. Current snowmobile designs have very high power-to-weight ratios, to address performance considerations. The desire for low weight has been stated to be a concern, since weight (and weight distribution) affects handling and operators occasionally have to drag their sleds out of deep snow. This has especially been mentioned as a concern in the context of four-stroke engines given that they are heavier than their two-stroke counterparts of similar power. However, four-stroke engines have significantly better fuel economy than two-stroke engines, and for identical fuel tank sizes, would have significantly greater range. This of course would be a positive attribute. The size of a fuel tank on a four-stroke powered snowmobile could be reduced to provide similar range to that of a similarly powered two-stroke snowmobile, resulting in offsetting weight savings from both the smaller fuel tank and less fuel on board. However, this could still represent a change in the distribution of weight compared to current sleds.

The approach used to control emissions in compliance with the Phase 1 standards will vary according to a given manufacturers product line, technological capability, long term plans, and other factors. However, we expect all manufacturers to pursue a mix of technologies. Some manufacturers may focus more on clean carburetion and associated engine modifications and apply those widely across their entire product line with more limited implementation of advanced technology such as four-stroke and semi direct injection engines. Others may choose to be more aggressive in applying advanced technologies in their more expensive, high-performance sleds and be less aggressive in pursuing emission reductions from their lower-priced offerings to optimize the fit of different technologies (and their associated costs) to the various product offerings in the near term. As can be seen on their websites[58], all large manufacturers now have limited product offerings of advanced emissions technology snowmobiles. Snowmobiles must, on average and according to the phase in schedule, meet the first phase of emission standards beginning with the 2006 model year. Given the relative inexperience this industry has with designing effective snowmobile engines with advanced emissions controls and in certifying to EPA requirements, it is unlikely that any manufacturer could market enough of these advanced snowmobiles for model year 2006 to enable it to meet significantly more stringent standards. Due to the unique performance requirements for snowmobiles and the relatively short lead time to modify current engines or design new products, we believe our 2006/2007 standards will be technologically challenging for manufacturers and will result in cleaner snowmobiles.

Phase 2 and Phase 3 Standards

We believe the two most viable advanced technologies for use in snowmobiles are two-stroke direct (or semi-direct) injection technology and four-stroke engines. All four major snowmobile manufacturers either currently offer or are planning to offer in the next year or two one or more of these technologies on a limited number of snowmobile models. With sufficient resources and lead time for manufacturers, we believe it would be technologically possible to eventually apply such advanced technology broadly across most or all of the snowmobile fleet.

Manufacturers have indicated that with enough investment and sufficient time to design and implement direct injection technology for snowmobile use, two-stroke engines equipped with direct fuel injection systems can reduce HC emissions by 70 to 75 percent and reduce CO emissions by 50 to 70 percent. These projections are based largely on laboratory prototypes and generally do not account for in-use deterioration or the need for production compliance margins in the ultimate certification levels. Certification results for 2002 model year outboard engines and personal water craft support these projections.[59]

In addition to the direct injection two-stroke, a few four-stroke models are currently available, and more are expected to be introduced in the next few years. Based on testing of prototypes and other low-hour engines it appears that advanced four-stroke snowmobiles are capable of HC reductions ranging from 70 to 95 percent relative to current technology two-stroke snowmobile engines. However, CO reductions from four stroke engines vary quite a bit. For four-stroke engines used in low-power applications, CO reductions of 50 to 80 percent from baseline levels have been reported. However, the majority of the snowmobile market is for higher-powered performance machines, and CO reductions from higher powered four stroke engines are lower than those from low powered four strokes, with expected reductions of 20 to 50 percent from baseline levels. As discussed further in the RSD and Summary and Analysis of Comments document, we expect that many of the four-stroke snowmobile models offered in the future will not be current two-stroke models which have been modified to utilize a four-stroke engine, but rather new models designed specifically to take advantage of the unique characteristics of four-stroke engines. Thus, we expect that the lead time associated with the conversion to four-stroke engines and optimized sleds is even longer than that needed for conversion to direct injection two-stroke technology.

It is not obvious to us that either of these advanced technologies is better than the other or more suited to broad application in the snowmobile market. Each has its strong points regarding emissions performance, power, noise, cost, etc. For example, two-stroke engines equipped with direct fuel injection have the potential to have greater CO emission reductions than a comparably powered four-stroke engine, although they would have less HC reductions. For those applications where a light, powerful, compact engine is desired, a direct injection two-stroke engine may be preferred. However, for applications where pure power and speed is desired, a high-performance four-stroke engine may be preferred. Given the broad range of snowmobile model designs and applications it is apparent that one of these technologies could be preferable to the other in some situations. Further, given the broad range of snowmobile types offered, a mix of advanced technologies would provide the best opportunity for substantial average emission reductions while still maintaining customer satisfaction across the entire range of snowmobile types. Thus, we believe it is most appropriate to set emission standards for snowmobiles that are not based entirely on the use of either direct injection two-stroke technology or four-stroke engines, but rather a mix of the

[58] *http://www.arcticcat.com, http://www.polarisindustries.com, http://www.skidoo.com,* and *http://www.yamaha-motor.com.*

[59] See the snowmobile feasibility discussion in the Final Regulatory Support Document.

two, along with some other technologies in certain applications.

It is our belief that with sufficient resources and lead time, manufacturers can successfully implement technologies such as two-stroke direct injection and four-stroke engines in many models in their respective snowmobile fleets. The question at hand is how broadly this technology can be practically applied across the snowmobile fleet in the near term, taking into account factors such as the number of engine and snowmobile models currently available, and the capacity of the industry to perform the research and development efforts required to optimally apply advanced technology to each of these models.

Currently there are only four major snowmobile manufacturers, and each has different technological capabilities. Of these four, only two currently manufacturer all of their own engines, one has limited in-house engine manufacturing operations, the other has none. Beyond this, there are only two advanced technologies (direct injection two-stroke, and four stroke) that at this time appear to be feasible to provide significant reductions in snowmobile emissions. Further, given the small volume of snowmobile sales compared to other vehicles and equipment which use similar sized engines, these manufacturers may have difficulty in working with their engine suppliers to develop and optimize four-stroke or direct injection two-stroke technology quickly. Clearly, the nature of the relationship between these snowmobile manufacturers and their suppliers would result in a less efficient use of available lead time as compared to the manufacturers that have both technology and engine manufacturing available in-house. Thus, there is varying capability within the snowmobile industry to develop and implement advanced technology in the next five to ten years.

The amount of engine redesign or development work is another factor. While one snowmobile manufacturer currently offers four different engine models, the other three, including the two that do not manufacture their own engines, currently offer eight to twelve engine models each. Additionally, each of these engine models typically goes into more than one type of snowmobile. There are a variety of basic snowmobile types specifically designed for a variety of riding styles and terrains including high-performance trail riding, high-performance off-trail riding (including designs specifically for deep snow), mountain riding, touring (two person snowmobiles designed for use on groomed trails), and entry level snowmobiles (lower-powered and lower priced snowmobiles which utilize simpler technology and are specifically designed to appeal to first time buyers). Some snowmobile manufacturers also offer snowmobile models specifically for youth, and utility models for work in cold climates or to facilitate winter sports such as hauling winter camping gear, or hunting and fishing equipment. It is not surprising that some of these snowmobile models are much more popular than others. Thus, there can be quite a difference in the production volumes of the different snowmobile types, with performance models typically having large sales volumes, and more unique models such as utility and youth models selling far fewer units.

Considering the number of snowmobile types, and the fact that each engine model is typically used in several different snowmobile models, each manufacturer has potentially dozens of different engine/snowmobile combinations that it offers. An analysis of the manufacturers current product offerings shows that while one manufacturer has only about twelve unique engine/snowmobile model combinations, the other three offer significantly more—from around 30 to over 50. Each of these different snowmobile models is designed with specific power needs in mind, with the engine and clutching specifically suited for the application style for which the snowmobile was intended. This means that a given engine model may require slightly different calibrations for each different snowmobile model in which it is used. While the advanced technologies are known, they are not ''one size fits all'' technologies. These technologies need to be optimized not only for the specific engine model, but in some cases for the snowmobile the engine will be used in as well, as just described.

For all of the reasons just discussed, we believe that it is necessary to allow two additional years of lead time for compliance with the proposed Phase 2 standards, and are therefore adopting the ultimate phase of snowmobile standards effective for the 2012 model year rather than the 2010 model year as proposed. However, we expect that between the 2006 and 2012 model years there can and will be substantial development and application of advanced technologies on snowmobiles beyond that required in compliance with the Phase 1 standards. We believe that it is important to capture the emission benefits that these advances present, and are therefore adopting a new set of Phase 2 standards, effective with the 2010 model year, which will require 50 percent HC reductions and 30 percent CO reductions from average baseline levels. The Phase 2 standards are 275 g/kW-hr (205 g/hp-hr) for CO and 75 g/kW-hr (56 g/hp-hr) for HC. These Phase 2 standards will be followed by Phase 3 standards in 2012 which will effectively require the equivalent of 50 percent reductions in both HC and CO as compared to average baseline levels.

We believe that the 2010 and 2012 model years are appropriate for the second and third phases of snowmobile standards because they allow an additional four to six years beyond the Phase 1 standards for the further development and application of advanced emissions control technology. We expect that the manufacturers will utilize some level of advanced technology in compliance with the Phase 1 standards, and this will give the manufacturers some time to evaluate how the advanced technology they have already applied works in the field as well as give them several years to work with the certification and compliance programs before more stringent Phase 2 standards take effect in 2010. We believe that by the 2010/2012 time frame manufacturers could, at least in theory, apply advanced technology across essentially their entire product lines. However, the manufacturers are resource constrained, and they will need to focus their efforts on compliance with the Phase 1 and Phase 2 standards prior to the 2010 model year. There is a need for significant technology development and manufacturing learning to occur, and there is concern that in this time frame such technology could not be performance, emissions, and safety optimized for each application given the number of engine and snowmobile model combinations that would require optimization. This would be especially challenging for those manufacturers who rely on outside suppliers for their engines. Rather, we expect that by the 2012 model year the manufacturers could both apply and optimize advanced technology to their larger volume families while applying clean carburetion and electronic fuel injection technology to the rest of their production. Under this scenario we expect that the manufacturers could apply optimized advanced technology on around 50 percent of their production by the 2010 model year, and an additional 20 percent of their production by the 2012 model year. We do not believe that having only two

years lead time between the Phase 2 and Phase 3 standards presents any problems because compliance with the Phase 3 standards will be achieved through the broader application of technologies which will already be applied in compliance with the Phase 2 standards, rather than through the introduction of new technologies altogether.

As was previously discussed, four-stroke technology has the potential to significantly reduce HC emissions, even below levels expected from direct injection two-stroke technology. However, higher powered four-stroke engines are not currently capable of CO reductions on the order of those expected from direct injection two-stroke technology. This is significant given that a very large segment of the snowmobile market is in higher powered performance sleds. We are concerned that a straight 50 percent reduction in CO in the Phase 3 standards may deter technology development and constrain the use of four-stroke technology in this key portion of the snowmobile market. As the emissions standards become more stringent we believe that it is important to provide additional flexibility to assure compliance in a manner which minimizes costs and is consistent with the availability of technology and the realities of the snowmobile marketplace. Thus, to allow snowmobile manufacturers the flexibility to base their future product lines on higher percentages of four-stroke models, we are adopting a flexible Phase 3 standards scheme that will allow manufacturers to certify their production to levels which nominally represent 50 percent reductions in HC and CO. This overall reduction could be met by other combinations summing to 100 percent such as 70 percent reductions in HC and 30 percent reductions in CO, or any level between these two points (for example, 60 percent reductions in HC and 40 percent reductions in CO). However, in no case may a manufacturer's corporate average for the individual pollutants for Phase 3 be less than 50 percent on HC and 30 percent on CO (the Phase 2 standards).

Some manufacturers have raised safety concerns regarding the use of advanced technologies on snowmobiles, particularly four-stroke engines used in high-performance and mountain sleds. In particular, they raised issues regarding weight and the ability to start the snowmobile in cold weather. However, we believe these issues can be overcome with sufficient time and technology. For example, as noted above, smaller fuel tanks can significantly reduce the weight of four-stroke snowmobiles. The use of new light-weight materials can also reduce weight for four-stroke designs. Manufacturers have raised concerns over cold starting for four-stroke engines because the typical four-stroke design uses an oil distribution system where the pump and oil are located in the crankcase (referred to as a ''wet'' sump). During extremely cold temperatures, the oil becomes thick and provides an additional load the engine must overcome when starting. However, by using a ''dry'' sump, where the oil and pump are located in a separate tank (not in the crankcase), the concern over cold temperature starting loads due to thickened oil in the crankcase are gone. The new Yamaha RX–1 four-stroke snowmobile uses a smaller fuel tank and lighter materials to reduce weight and a dry sump to help cold starting, so clearly these issues can be addressed.

We believe that, given enough resources and lead time, it is ultimately feasible at some point beyond the 2012 model year to apply advanced technology successfully to all snowmobiles and perhaps to even resolve current design and operating issues with regard to the use of aftertreatment devices such as catalytic converters. However, it is difficult to predict at this point when this would be feasible, especially given the number of smaller volume snowmobile models that would need development effort once the larger volume models were optimized in compliance with the Phase 3 standards in 2012. We did consider standards based on the full application of optimized advanced technology to all snowmobiles, for example by setting the Phase 3 standards at a level that would require the full application of advanced technology to all snowmobiles. However, we believe that such standards are not feasible by 2012 and, we are not confident that we could choose the appropriate model year beyond 2012 for such standards given how far in the future such a requirement would be. Such an approach would also serve to eliminate the benefits associated with the Phase 3 standards in 2012. There are diverse capabilities and limiting factors within the industry, and time is needed for an orderly development and prove out of this advanced technology across the various models and applications before standards are set which require its use in all models. Additionally, as these engines have never previously been regulated or used advanced emission control technologies in large numbers, we believe it is appropriate to monitor the development and use of such technologies on snowmobiles before requiring these technologies for the entire fleet. Thus, we chose not to set standards at this time based on the optimized application of advanced technology to all snowmobiles. Nevertheless, we will monitor the development and application of the advanced technology as manufacturers work to comply with the Phase 3 standards in 2012 and will consider a fourth phase of snowmobile standards to take effect sometime after the 2012 model year.

We have not included a NO_X standard for the first two phases of the snowmobile regulations because NO_X emissions from snowmobiles, particularly two-stroke engines, are very small compared to levels of HC, CO and PM and we believe that stringent NO_X standards may require the use of technologies that will lead to increases in HC, PM and CO levels. Technologies that reduce NO_X are likely to increase levels of HC, PM and CO and vice versa, because technologies to reduce HC, PM and CO emissions would result in leaner operation. A lean air and fuel mixture causes NO_X emissions to increase. These increases are minor, however, compared to the reductions of HC, CO and PM that result from these techniques. On the other hand, any attempt to control the NO_X emissions may have the counter-effect of increasing HC, CO, and PM emissions, as well as causing the greater secondary PM concentrations associated with increased HC emissions. This is especially critical for HC and PM, because NO_X would be regulated primarily for its effect on secondary PM levels.

We are promulgating a NO_X standard (actually an HC plus NO_X standard) as part of the third phase of the snowmobile standards. This standard will essentially cap NO_X emissions from these engines. The reason we are including such standards in the final phase of the rule as that the third phase of the rule will result in increases in the use of four-stroke engines. While four-stroke engines greatly reduce HC and direct PM levels, they increase levels of NO_X. While NO_X levels remain substantially lower than HC and CO levels, they are higher than levels for two-stroke engines.

Thus, it is appropriate to place a cap on such levels to ensure that levels do not become so high as to become a substantial concern.

While we are promulgating an effective cap on such emissions, the standard will not mandate substantial reductions in NO_X. This is because the

emissions effect on reducing NO_X from four-stroke engines is the same as for two-stroke engines; that is, technologies that substantially reduce NO_X will increase levels of other pollutants of concern. The only way to reduce NO_X emissions from four-stroke engines (at the same time as reducing HC and CO levels) would be to use a three-way catalytic converter. We don't have enough information at this time on the durability or safety implications of using a three-way catalyst with a four-stroke engine in snowmobile applications. Three-way catalyst technology is well beyond the technology reviewed for this rule and would need substantial additional review before being contemplated for snowmobiles. Thus, given the overwhelming level of HC and CO compared to NO_X, and the secondary PM expected to result from these levels, it would be premature and possibly counterproductive to require substantial NO_X reductions from snowmobiles at this time.

2. Are There Opportunities for Averaging, Emission Credits, or Other Flexibilities?

a. Averaging, banking and trading. Historically, voluntary emission-credit programs have allowed a manufacturer to certify one or more engine families at emission levels above the applicable emission standards, provided that the increased emissions are offset by one or more engine families certified below the applicable standards. With averaging alone, the average of all engine families for a particular manufacturer's production must be at or below that level of the applicable emission standards. We are adopting separate emission-credit programs for snowmobiles, off-highway motorcycles, and ATVs. We are adopting an emission-credit program for the optional ATV engine-based standards as well as the chassis-based standards.

In addition to the averaging program just described, the emission-credit program contains banking and trading provisions, which allow manufacturers to generate emission credits and bank them for future use in their own averaging program or sell them to another entity. We are not adopting a credit life limit or credit discounting for these credits. Unlimited credit life and no discounting increases the incentive to introduce the clean technologies needed to gain credits. To generate credits, the engine family's emissions level must be below the standard, so any credits will result from reducing emissions more than necessary to meet the standards.

ATVs and Off-highway Motorcycles

Emission credits from off-highway motorcycle and ATVs will be averaged separately because there are differing degrees of stringency in the standards for ATVs and off-highway motorcycles long-term and we do not want off-highway motorcycle credits to dilute the effectiveness of the ATV standards. This also avoids providing an advantage in the market to companies that offer both types of products over those that produce only one type. Also, ATVs certified to the chassis-based standards or engine-based standards are considered separate averaging groups with no credit exchanges between the two. We are not allowing credit exchanges between engine and chassis-based testing because there is little, if any, correlation between the two test cycles. Without a strong correlation, it is not possible to establish an exchange rate between the two programs. For the engine-based (J–1088) ATV standards, the standards vary by engine size (less than 100 cc, 100 cc up to 225 cc, and 225 cc and greater). We are allowing averaging, banking, and trading for each of the separate engine-based $HC+NO_X$ standards with no credit exchanges or averaging between the engine size categories.

We did not propose an averaging, banking, and trading program for CO for ATVs and off-highway motorcycles because it was not clear if such provisions would be needed to implement the expected technologies or if the need would warrant the additional complexity of an averaging program. We received comments that the 25 g/km CO standard could be technologically limiting in some instances. Manufacturers recommended that EPA drop CO the standard from the program and provided no comments regarding CO averaging. In addition, our recent testing indicates that the level of the standards may represent a significant technological challenge to the manufacturers in some cases.

We are retaining CO standards in the final program, and are establishing different CO standards for off-highway motorcycles and ATVs, as discussed in Section III.C.1. For ATVs, we are addressing the feasibility issues by finalizing a standard of 35 g/km. We are not including averaging or a credits program at this level. We are also adopting the 35 g/km CO standard for the optional off-highway motorcycle program with no averaging or credits program. At the 35 g/km level, we believe averaging is unnecessary and would greatly reduce the need to control CO, especially for larger manufacturers who have several engine families with which to average. The engine-based (J–1088) standards for CO also do not represent levels of stringency where we believe averaging would be appropriate or necessary. California certification test data shows that the engine-based (J–1088) CO standards can be achieved with reasonable compliance margins.

For the primary off-highway motorcycle program, we are retaining the proposed 25 g/km CO standard. We are providing the option of averaging for the 25 g/km CO standard, to help manufacturers balance the need to control CO while meeting stringent NO_X requirements. We believe that the final program with averaging for CO will enable manufacturers to develop a unified emission-control strategy to control HC, NO_X, and CO, rather than requiring them to develop unique control strategies driven by the need to meet the CO standards.

We are adopting FEL caps where we are allowing averaging standards. For ATVs certified to the 1.5 g/km FTP standard, there will be an FEL cap of 20 g/km $HC+NO_X$. This cap will also apply to off-highway motorcycles certified to the 2.0 g/km NO_X+HC standard. For off-highway motorcycles certified to the 25 g/km CO standard, the CO cap will be 50 g/km. For off-highway motorcycles, we are also finalizing an option that allows manufacturers to certify to an average $HC+NO_X$ standard of 4.0 g/km, if the manufacturer certifies all off-highway motorcycles including competition machines. Under this option, we are limiting FELs to 8.0 g/km. The goal of the option is to encourage the development and certification of clean competition products. Without a reasonable FEL limit, manufacturers could certify two-stroke machines at, or close to, baseline levels. This is a concern because the majority of manufacturers' product offerings are likely to be certified below the 4.0 g/km level and significant credits could be available. We believe the 8.0 g/km limit ensures significantly cleaner products compared to baseline levels for competition machines, while providing manufacturers with the incentive and flexibility to pursue innovative technologies for their competition products.

As noted above, we have also included engine-based J–1088 standards for ATVs. The $HC+NO_X$ portion of the J–1088 standards can be met through averaging and we have included reasonable emissions caps for these standards as well. For engines certified to the permanent optional J–1088 standards for ATV engines below 100 cc, the emissions cap is 40.0 g/kW-hr.

The NO_X+HC emissions cap is 32.2 g/kW-hr for engine certified to the temporary J–1088 standards which are available for all engine sizes.

Snowmobiles

For snowmobiles, we are adopting an emissions averaging and credit program for all three phases of standards. Averaging is available for each phase of standards. Once the program begins in 2006, manufacturers will make a demonstration of compliance with the applicable corporate average standards at the end of the model year. If a manufacturer has achieved a corporate average level below the corporate average standards, then the manufacturer may bank credits. Manufacturers may bank credits for use in a current phase of standards based on the difference between their corporate average and the standards. In order to bank credits for future use under a subsequent phase of standards, manufacturers may pull engines from their corporate average for the current phase of standards and certify them early to a future phase of standards. The credits must be generated based on the difference between the FEL for those engines and the phase of standards for which they are intended to be used. The credits may not be carried forward for use to meet a subsequent phase of standards.

For example, manufacturers may bank Phase 2 credits in 2007 by removing engines from their 2007 corporate average for one or both pollutants and certifying the engines to the Phase 2 standards early. These Phase 2 credits may then be saved for Phase 2, but may not be used for Phase 3. Manufacturers may also remove only part of an engine family for purposes of banking credits. Manufacturers may bank credits after the end of the model year when they have completed their demonstration of compliance for that year. The Final Rule includes provisions for banking credits for a single pollutant, with the other pollutant remaining in the averaging program for the current model year. For Phase 3, if a manufacturer chooses to bank credits for only one pollutant, the manufacturer must use an assigned value for the other pollutant in the Phase 3 standards formula. We are specifying a value of 90 g/kW-hr for HC+NO_X and 275 g/kW-hr for CO. These levels ensure no windfall credits using the Phase 3 formula for the credit-generating engines.

Starting with Phase 3, Family Emission Limits may be set up to the current average baseline emission levels of 400 g/kW-hr (300 g/hp-hr) CO and 150 g/kW-hr (110 g/hp-hr) HC. These caps ensure a minimum level of control for each snowmobile certified under the long-term program. We believe this is appropriate due to the potential for personal exposure to very high levels of emissions as well as the potential for high levels of emissions in areas where several snowmobiles are operated in a group. We proposed that these limits would be effective beginning in 2006. We received comments from manufacturers recommending that we drop the FEL limits because they would create a tremendous near term workload burden. They commented that manufacturers would need to modify all product lines for 2006 just to meet the FEL limit. EPA recognizes that this could be a significant issue in the early years of the program and could detract from manufacturers' efforts to develop much cleaner technologies. Thus, we are finalizing the FEL limits only for Phase 3 and later, beginning in 2012. We believe this helps resolve the lead-time and workload issues while maintaining the integrity of the long-term program.

b. Early credits. We believe that allowing manufacturers to generate credits prior to 2006 has some merit in that it encourages them to produce cleaner snowmobiles earlier than they otherwise might and provides early environmental benefits. It would also allow for a smoother transition to new emission standards in a previously unregulated industry. However, in the proposal we expressed concern that an early-credit program could result in the generation of windfall credits, especially if the credits were generated relative to the average baseline emissions rates. A manufacturer could choose those engine families that already emit below the average baseline levels and certify those families for credit generation purposes without doing anything to actually reduce their emissions. Clearly this would undermine any environmental advantages of an early-credit program. However, we believe that it is possible to design an early-credit program which provides incentive for the early introduction of cleaner snowmobiles and also helps ease the transition into the first ever phase of snowmobile standards while preventing the generation of windfall credits. The early-credit program described in the following paragraphs will be available beginning with the 2003 model year. As with the standard snowmobile emissions averaging, banking and trading program, credits generated under the early-credit program will be calculated on a power-weighted basis.

A manufacturer can choose to certify one or more engine families early for purposes of credit generation. An engine family must at least meet the Phase 1 standards for both HC and CO to qualify for early credits, and the credits will be calculated based on the difference between the certification FEL and the Phase 1 standards. Credits generated under this option can be used only in compliance with the Phase 1 standards. Thus, such early credits will expire at the end of the 2009 model year.

The above discussion of early credits primarily addresses those snowmobiles that will meet the Phase 1 standards early. However, we also expect that there will be some engine families introduced prior to the 2006 model year which could meet Phase 2 standards. For such engines, a manufacturer may elect to split credits between Phase 1 and Phase 2. A manufacturer may save credits generated between the certification FELs and the actual Phase 2 standards for use in Phase 2. Credits generated between the Phase 1 and Phase 2 standards could be used for Phase 1 only. Credits generated prior to the start of the program in 2006 may not be used for Phase 3.

EPA did not receive comments on such programs for off-highway motorcycle or ATVs and we are not finalizing any additional provisions. The majority of products currently offered for sale are equipped with four-stroke engines which raises concerns over the potential for windfall credits. Due to this issue and the lack of suggestions or input on the part of commenters, we are not finalizing early credits or other types of flexibilities for these programs.

c. Nonconformance penalties for recreational vehicles. Section 206(g) of the Act, 42 U.S.C. 7525(g), authorizes EPA to establish nonconformance penalties (NCPs) for motorcycles and heavy-duty engines which exceed the applicable emission standard, provided that their emissions do not exceed an appropriate upper limit. NCPs allow manufacturers that are technological laggards to temporarily sell their vehicles by payment of a penalty, rather than being forced out of the marketplace. One manufacturer suggested that we consider establishing NCPs for recreational vehicles. Section 213(d) of the Act makes nonroad standards subject to the provisions of section 206, and directs EPA to enforce nonroad standards in the same manner as highway vehicles. We therefore believe that the Act authorizes us to establish NCPs in appropriate circumstances for nonroad engines and vehicles. Recreational vehicles are

similar technologically to highway motorcycles, and NCPs might be appropriate for recreational vehicles under certain circumstances.

We will consider the need for NCPs two or three years before compliance with these standards is required. Manufacturers that determine in that time frame that they are likely to be unable to comply with the standards should notify us. If we determine that NCPs are appropriate for recreational vehicles, we would establish regulations that would specify how to calculate the penalties. While we have not determined the content of such regulations, it is likely that they would be similar to our existing NCP regulations for heavy-duty engines, which are set forth in 40 CFR part 86, subpart L.

3. Are There Voluntary Low-Emission Standards for These Engines?

In the proposal we included a Voluntary Low-Emission Standards program for recreational vehicles. We did this for two reasons: to encourage new emission-control technology and to aid the consumer in choosing clean technologies. We received numerous comments on this proposed program. The environmental community was supportive of voluntary standards and encouraged us to adopt permanent labels which identify the emission performance of the vehicle in a simplistic manner that would be easily understood by the initial purchaser and any purchases of used recreational vehicles. Manufacturers of recreational vehicles ATVs, off-highway motorcycles, and snowmobiles), on the other hand, did not support voluntary standards. They were supportive of providing initial purchasers with emission performance information via temporary consumer labeling, but were opposed to voluntary standards. Their concern was that voluntary standards or permanent labels could be used by federal, state, local or any other jurisdictions to limit the use of recreational vehicles from public lands by allowing access only to recreational vehicles that meet certain emission criteria. Manufacturers further argued that our proposed mandatory emission standards were stringent enough that they would encourage and result in the use of advanced emission-control technology and that the voluntary standards would provide no additional incentives.

As stated above, the general purpose of the Voluntary Low-Emission Standards program is to provide incentives to manufacturers to produce clean products and thus create market choices for consumers to purchase these products.[60] For all three recreational vehicle categories, but especially for snowmobiles, we are expecting a variety of emission-control technologies to be used to meet the standards. In all three categories we expect consumers to have a choice of which technologies to purchase and that they will base that purchase on an understanding of key attributes such as cost, performance, noise levels, safety, and emissions. Thus, an important factor for informing consumer decision is to provide them information on the relative emissions attributes of a given model. We believe this can be achieved through a temporary consumer labeling program without voluntary standards. Therefore, we are not finalizing a voluntary standard program for recreational vehicles at this time. We will consider this issue again in the future, once experience is gained under this program. In addition, given the manufacturer's opposition, it is not clear that voluntary standards by themselves would be an effective incentive for manufacturers.

Instead, we will be adopting a consumer labeling program. A label must be fixed securely to the product prior to arriving at the dealership but does not have to be permanent and may be removed by the consumer when placed into use. The label can be in the form of a removable sticker or decal, or a hang tag affixed to the handlebars or fuel cap. If a hang tag is used, it must be attached by a cable tie that cannot be easily removed, except by the ultimate retail consumer. The label, at a minimum, must include the following information: U.S. EPA; Clean Air Index (appropriate pollutant, *e.g.*, $HC+NO_X$, etc.); manufacturer name; vehicle model with engine description (*e.g.*, 500 cc two-stroke with direct fuel injection); emission performance rating scale; explanation of scale; and notice stating that label must be on vehicle prior to sale and can be removed only by the ultimate retail consumer. In section 1051.135(g) of the regulations, titled ''How must I label and identify the vehicles I produce?,'' we have developed several equations that determine what the emission performance rating scale will be for each category. The scale is based on a rating system of 1.0 through 10.0. A value of 1.0 would be assigned for the cleanest vehicle, while the dirtiest vehicle would get a rating of 10.0.

4. What Durability Provisions Apply?

We are adopting several additional provisions to ensure that emission controls will be effective throughout the life of the vehicle. This section discusses these provisions for recreational vehicles. More general certification and compliance provisions, which apply across different vehicle categories, are discussed in Sections II and VII, respectively.

a. How long do my engines have to comply. Manufacturers must produce off-highway motorcycle and ATV engines that comply over a useful life of 5 years or until the vehicle accumulates 10,000 kilometers, or for ATVs 1,000 hours, whichever occurs first. We consider the 10,000-kilometer and 1,000 hour values to be minimum values for useful life, with the requirement that manufacturers must comply for a longer period if the average life of their vehicles is longer than this minimum value.

The values being finalized will harmonize EPA's useful life intervals with those contained in the California program. We proposed a significantly longer useful life intervals of 30,000 kilometers based on our understanding of usage rates for the vehicles at the time of the proposal. We received comments from manufacturers that we overestimated vehicle usage and commenters recommended that we harmonize the useful life intervals with California's. We have lowered our estimate of usage rates based on available data, including new data provided during the comment period.

Based on our current estimates of usage, we concur with manufacturers that harmonization with California is the best approach for establishing minimum useful life intervals. Generally, this will allow the same emission test data to be used for certification under both programs. However, this remains the minimum useful life and longer useful life intervals could be required in cases where the basic mechanical warranty of the engine or the advertised operating life is longer than the minimum interval. Average service life information will help in making such a determination. The manufacturer can alternatively base the longer useful life on the average service life of the vehicles where necessary data are available.

For snowmobiles, the minimum useful life is 5 years, 8,000 km, or 400 hours of operation, whichever occurs first. We based these values on

[60] The snowmobile industry (see docket item II–G–221) and a group of public health and environmental organizations (see docket item II–G–139) have both expressed their general support for labeling programs that can provide information on the environmental performance of various products to consumers.

discussions with manufacturers regarding typical snowmobile life, and on emission-modeling data regarding typical snowmobile usage rates.[61] As with ATVs and off-highway motorcycles, longer useful life intervals are required where the basic mechanical warranty of the engine or the advertised operating life is longer than the minimum interval and the manufacturer may alternatively base the longer useful life on the average service life of the vehicles where necessary data are available.

b. What are the minimum warranty periods for emission controls. For off-highway motorcycle, ATVs, and snowmobiles, manufacturers must provide an emission-related warranty for at least half of the minimum useful life period. These periods could be longer if the manufacturer offers a longer mechanical warranty for the engine or any of its components; this includes extended warranties that are available for an extra price. See § 1051.120 for a description of which components are emission-related.

We have included in our final rule an optional set of standards for off-highway motorcycles that would require the certification of competition motorcycles. However, for those individual vehicles actually used in organized competition events, it may be appropriate to exclude competition motorcycles from warranty coverage. Machines used in competition, even part of the time, may be subject to usage that can cause premature degradation of the engine and related components. Competition riders may place a premium on winning at the expense of engine durability or could otherwise damage the vehicle during the competition events. In fact, most manufacturers do not offer any mechanical warranty on vehicles used in competition. In addition, motorcycles used only for competition may be modified by the user in ways that alter the emissions characteristics of the vehicle.[62] We do not believe it is reasonable to hold manufacturers responsible for the emission warranty for such vehicles.

c. How do I demonstrate emission durability during certification. Durability demonstration for off-highway motorcycles, ATVs, and snowmobiles includes a requirement to run the engines long enough to develop and justify the full life deterioration factor. This allows manufacturers to generate a deterioration factor that helps ensure that the engines will continue to control emissions over a lifetime of operation. Snowmobiles also must run out to the end of the useful life for purposes of durability demonstration and generating deterioration factors.

d. What maintenance is allowed during service accumulation. For vehicles certified to the minimum useful life, emission-related maintenance is generally not allowed during service accumulation. The only maintenance that may be done must be (1) regularly scheduled, (2) unrelated to emissions, and (3) technologically necessary. This typically includes changing engine oil, oil filter, fuel filter, and air filter.

5. Do These Standards Apply to Alternative-Fueled Engines?

These standards apply to all spark-ignited recreational vehicles, without regard to the type of fuel used. However, because we are not aware of any alternative-fueled recreational vehicles sold into the U.S. market, we are not adopting extensive special provisions to address them at this time.

6. Is EPA Controlling Crankcase Emissions?

We are requiring that new off-highway motorcycles and ATVs not emit crankcase vapors directly to the atmosphere. This requirement will phase in beginning in 2006 and be fully phased in by 2007. California's regulations for off-highway motorcycles and ATVs, which has been in effect since 1997, also prohibits the venting of crankcase vapors into the atmosphere. The major ATV manufacturers sell many of their California certified ATV models federally as 50-state applications. Thus, many ATVs sold federally already control crankcase emissions. The only exceptions could be some of the small youth ATV models that are imported from Asia.

The typical control strategy used to control crankcase emissions is to route the crankcase vapors back to the engine intake. This is consistent with our previous regulation of crankcase emissions from such diverse sources as highway motorcycles, outboard and personal water craft marine engines, locomotives, and passenger cars. We have data from California ARB showing that a performance-based four-stroke off-highway motorcycle experienced considerably higher tailpipe emission results when crankcase emissions were routed back into the intake of the engine, illustrating the potentially high levels of crankcase emissions that exist.[63]

New snowmobiles must also have closed crankcases, beginning in 2006. This requirement is relevant only for four-stroke snowmobiles, however, since two-stroke engines, by virtue of their operation, have closed crankcases. Information on the costs and benefits of this action can be found in the Final Regulatory Support Document.

D. Testing Requirements

1. What Duty Cycles Are Used To Measure Emissions?

Testing a vehicle or engine for emissions typically consists of exercising it over a prescribed duty cycle of speeds and loads, typically using a chassis or engine dynamometer. The nature of the duty cycle used for determining compliance with emission standards during the certification process is critical in evaluating the likely emission performance of engines designed to those standards. Duty cycles must be relatively comparable to the way equipment is actually used because if they are not, then compliance with emission standards would not assure that emissions from the equipment are actually being reduced in use as intended.

a. Off-highway Motorcycles and ATVs. For testing off-highway motorcycles and ATVs, we specify the current highway motorcycle test procedure be used for measuring emissions. The highway motorcycle test procedure is very similar to the test procedure as used for light-duty vehicles (i.e., passenger cars and trucks) and is referred to as the Federal Test Procedure (FTP). The FTP for a particular class of engine or equipment is actually the aggregate of all of the emission tests that the engine or equipment must meet to be certified. However, the term FTP has also been used traditionally to refer to the exhaust emission test based on the Urban Dynamometer Driving Schedule (UDDS), also referred to as the LA–4 (Los Angeles Driving Cycle #4). The UDDS is a chassis dynamometer driving cycle that consists of numerous ''hills''

[61] EPA memorandum, ''Emission Modeling for Recreational Vehicles,'' from Linc Wehrly to Docket A–2000–01, November 13, 2000 (document II–B–19).

[62] While it is possible that the user could make modifications to their competition off-highway motorcycle that alter the emissions characteristics of the vehicle, we do not expect tampering to be a problem for those competition vehicles certifying to our voluntary standard of 4.0 g/km $HC+NO_X$ because the technologies required to meet this standard, four-stroke engines and direct fuel injection two-stroke engines, are inherent to the engine and will be optimized for maximum engine performance as well as emissions performance. Thus, any modifications would actually reduce rather than improve engine performance.

[63] ''Closed Crankcase Exhaust Emissions from Four-Stoke Competition Off-highway Motorcycle,'' EPA memo from L. Wehrly to Docket A–2000–01, September 10, 2001 (document II-B–25).

which represent a driving event. Each hill includes accelerations, steady-state operation, and decelerations. There is an idle between each hill. The FTP consists of a cold start UDDS, a 10-minute soak, and a hot start. The emissions from these three separate events are collected into three unique bags. Each bag represents one of the events. Bag 1 represents cold transient operation, Bag 2 represents cold stabilized operation, and Bag 3 represents hot transient operation.

For highway motorcycles, we have three classes based on engine displacement, with Class I (50 to 169 cc) being the smallest and Class III (280 cc and over) being the largest. The highway motorcycle regulations allow Class I motorcycles to be tested on a less severe UDDS cycle than the Class II and III motorcycles. This is accomplished by reducing the acceleration and deceleration rates on some the more aggressive ''hills.'' We proposed to use this same class/cycle distinction for off-highway motorcycles and ATVs. In other words, we proposed that off-highway motorcycles and ATVs with an engine displacement at or below 169 cc would be tested over the FTP test cycle for Class I highway motorcycles. We proposed that off-highway motorcycles and ATVs with engine displacements greater than 169 cc would be tested over the FTP test cycle for Class II and Class III highway motorcycles. We requested comment on the appropriateness of allowing the use of the Class I test cycle for all ATVs.

Manufacturers have expressed concerns over the appropriateness of testing ATVs using the FTP and the ability of some ATVs to be run on the test cycle. Manufacturers recommended for FTP testing, that all ATVs be tested over the Class I cycle. Manufacturers stated that the Class I cycle top speed of 36 mph would be ''much more representative'' of ATV operation than the 57 mph top speed of the Class III cycle. Manufacturers also noted that California FTP testing is based on the use of the Class I cycle for all ATVs and that the EPA program would need to be changed allow for harmonization. Manufacturers did not raise these same concern for off-highway motorcycles which are tested in accordance with the highway motorcycle classifications for California.

After considering this issue further, we concur with the manufacturer's comments and are finalizing the Class I cycle for all ATVs. One of the objectives of the final program is to allow harmonization with California and this change is fundamental in the manufacturers' ability to use the same FTP test data for both programs. Also, the average speeds of in-use ATVs appear to be significantly lower than we estimated in the analysis for the proposal (8–13 mph compared to 20 mph). The new data on ATV usage alleviates concerns that the lower speeds of the Class I test cycle might miss significant high-speed ATV operation. The change in the test procedure is directionally consistent with this new data. In addition, the change in test procedure will enable ATVs in general to be tested over the FTP with fewer issues concerning the ability of the vehicles to operate over the driving cycle. We are finalizing the test procedure requirements as proposed for off-highway motorcycles. We believe that the manufacturer's concerns regarding the FTP are also addressed by the option to test the smallest ATVs (up to 100 cc) to J–1088 standards permanently. These vehicles are typically governed to top speeds below the 36 mph contained in the Class I FTP cycle. Also, the small displacement ATVs may be most strenuously tested (i.e., more operation at high loads) on the FTP due to their lower horsepower output.

We acknowledge that chassis dynamometers for ATVs could be costly to purchase and difficult to put in place in the near term, especially for smaller manufacturers. As discussed in Section III.C.1.b, we are allowing the use of the J1088 engine test cycle as a transitional option through model year 2008. The J1088 option expires after 2008 and the FTP becomes the required test cycle in 2009. As noted above, EPA is currently in discussions with ATV manufacturers to determine whether a new test cycle is appropriate. The J1088 may be discontinued earlier than 2009 if another test procedure is implemented.

b. Snowmobiles. We are adopting the snowmobile duty cycle developed by Southwest Research Institute (SwRI) in cooperation with the International Snowmobile Manufacturers Association (ISMA) for all snowmobile emission testing.[64] The test procedure consists of two main parts; the duty cycle that the snowmobile engine operates over during testing and other testing protocols surrounding the measurement of emissions (sampling and analytical equipment, specification of test fuel, atmospheric conditions for testing, etc.). While the duty cycle was developed specifically to roughly approximate snowmobile operation, many of the testing protocols are well established in other EPA emission-control programs and have been simply adapted where appropriate for snowmobiles.

The snowmobile duty cycle was developed by instrumenting several snowmobiles and operating them in the field in a variety of typical riding styles, including aggressive (trail), moderate (trail), double (trail with operator and one passenger), freestyle (off-trail), and lake driving. A statistical analysis of the collected data produced the five mode steady-state test cycle is shown in Table III.D–1. This duty cycle is the one that was used to generate the baseline emissions levels for snowmobiles, and we believe it is the most appropriate for demonstrating compliance with the snowmobile emission standards at this time.

TABLE III.D–1.—SNOWMOBILE ENGINE TEST CYCLE

Engine parameter	Mode				
	1	2	3	4	5
Normalized Speed	1.00	0.85	0.75	0.65	Idle
Normalized Torque	1.00	0.51	0.33	0.19	0.00
Relative Weighting (in percent)	12	27	25	31	5

The rest of the testing protocol is largely derived from our regulations for marine outboard and personal water craft engines, as recommended in the SwRI/ISMA test cycle development work (61 FR 52088, October 4, 1996).

[64] ''Development and Validation of a Snowmobile Engine Emission Test Procedure,'' Jeff J. White, Southwest Research Institute and Christopher W. Wright, Arctic Cat, Inc., Society of Automotive Engineers paper 982017, September, 1998. (Docket A–2000–1; document II–D–05).

The testing equipment and procedures from that regulation are generally appropriate for snowmobiles, including the provisions for raw exhaust gas sampling which are being adopted here for snowmobiles.

Unlike marine engines, however, snowmobiles tend to operate in cold ambient temperatures. Thus, some provision needs to be made in the snowmobile test procedure to account for the colder ambient temperatures typical of snowmobile operation. Since snowmobile carburetors are jetted for specific ambient temperatures and pressures, appropriate accounting for typical operating temperatures is important to assure that anticipated emissions reductions actually occur in use. We proposed that snowmobile engine inlet air temperature be between −15° C and −5° C (5° F and 23° F), but that the ambient temperature in the test cell not be required to be refrigerated. We received comments stating that this approach would be expensive due to the need for refrigeration equipment, pointing out that the snowmobile manufacturers do not currently have the capacity for cold testing. Further, we received comments that accurate emissions results can be obtained using appropriate jetting determined by extrapolating from the manufacturer's jet chart (if necessary).

We agree that emissions can be accurately measured at higher ambient temperatures provided that the proper compensation be made in the fueling system. For carbureted engines this means jetting the engine appropriately for the test temperature. For electronically controlled engines this doesn't tend to be an issue because such technology generally includes temperature compensation in its control algorithms. However, one manufacturer stated that for snowmobiles that have electronically controlled engines, it would be preferable and environmentally appropriate to test with colder inlet temperatures. Thus, we are adopting the option to allow snowmobile testing using either cold engine inlet air temperatures between −15° C and −5° C (5° F and 23° F) or warm engine inlet air temperatures between 20° C and 30° C (68° F and 86° F). However, depending on the location of the air box where inlet air enters the engine intake system, the inlet temperature could be considerably warmer than ambient conditions. For a snowmobile that does not have temperature compensating capabilities, it could be possible to get a moderate emission reduction due to the increase in air density that results at colder temperatures from the artificially induced test inlet air. These emission reductions would not occur in real operation since actual inlet air would be warmer. Therefore, to use the colder inlet temperature option, a manufacturer must demonstrate that for the given engine family, the temperature of the inlet air within the air box is consistent with the inlet-air temperature test conditions.

2. What Fuels Will Be Used During Exhaust Emission Testing?

We are adopting fuel specifications as proposed for all recreational vehicles that we have specified for 2004 and later light-duty vehicles.

3. Are There Production-Line Testing Provisions for These Engines?

Recreational vehicle or engine manufacturers must perform emission tests on a small percentage of their production as it leaves the assembly line to ensure that production vehicles operate at certified emission levels. The broad outline of this program is discussed in Section II.C.4 above. Production-line testing must be performed using the same test procedures as for certification testing.

E. Special Compliance Provisions

As described in Section XI.B, the report of the inter-agency Small Business Advocacy Review Panel addresses the concerns of small-volume manufacturers of recreational vehicles. We proposed to adopt the provisions recommended by the panel and received comments on the proposals. We are finalizing the provisions below as proposed, with the modifications as noted.

Off-Highway Motorcycles and ATVs

To identify representatives of small businesses for this process, we used the definitions provided by the Small Business Administration for motorcycles, ATVs, and snowmobiles (fewer than 500 employees). Eleven small businesses agreed to serve as small-entity representatives. These companies represented a cross-section of off-highway motorcycle, ATV, and snowmobile manufacturers, as well as importers of off-highway motorcycles and ATVs.

As discussed above, our emission standards for off-highway motorcycles and ATVs will likely necessitate the widespread use of four-stroke engines. Most small-volume off-highway motorcycle and ATV importers—and to a lesser degree, small-volume manufacturers—currently use two-stroke engines. While four-stroke engines are common in motorcycles and ATVs in general, their adoption by any manufacturer is still a significant business challenge. Small manufacturers of these engines may face additional challenges in certifying engines to emission standards, because the cost of certification would be spread over the relatively few engines they produce. These higher per-unit costs may place small manufacturers at a competitive disadvantage without specific provisions to address this burden.

We are applying the flexibilities described below to engines produced or imported by small entities with combined off-highway motorcycle and ATV annual sales of fewer than 5,000 units. The inter-agency panel recommended these provisions to address the potentially significant adverse effects on small entities of an emission standard that may require conversion to four-stroke engines. The 5,000-unit threshold is intended to focus these flexibilities on those segments of the market where the need is likely to be greatest and to ensure that the flexibilities do not result in significant adverse environmental effects during the period of additional lead-time recommended below.[65] In addition, we are limiting some or all of these flexibilities to companies that are in existence or have product sales at the time we proposed emission standards to avoid creating arbitrary opportunities in the import sector, and to guard against the possibility of corporate reorganization, entry into the market, or other action for the sole purpose of circumventing emission standards.

Snowmobiles

There are only a few small snowmobile manufacturers and they sell only a few hundred sleds a year, which represents less than 0.5 percent of total annual production. Therefore, the per-unit cost of regulation may be significantly higher for these small entities because they produce very low volumes. Additionally, these companies do not have the design and engineering resources to tackle compliance with emission standard requirements at the same time as large manufacturers and tend to have limited ability to invest the capital necessary to conduct emission testing related to research, development, and certification. Finally, the requirements of the snowmobile program may be infeasible or highly impractical because some small-volume

[65] For example, importers may have access to large supplies of vehicles from major overseas manufacturers and potentially could substantially increase their market share by selling less expensive noncomplying products.

manufacturers may have typically produced engines with unique designs or calibrations to serve niche markets (such as mountain riding). The new snowmobile emission standards may impose significant economic hardship on these few manufacturers whose market presence is small. We therefore believe significant flexibility is necessary and appropriate for this category of small entities, as described below.

Flexibilities

1. Additional lead time. We are adopting a delay of two years beyond the date larger businesses must comply to ease the burden for small businesses. This will provide extra time to develop technology and, in the case of importers, extra time to resolve supplier issues that may arise. The two-year delay also applies to the timing of the Phase 2 standards for snowmobiles.

In addition, for small snowmobile manufacturers, the emission standards phase in over an additional two years at a rate of 50 percent, then 100 percent. Phase 1 phases in at 50/50/100 percent in 2008/2009/2010 and Phase 2 phases in at 50/50/100 percent in 2012/2013/2014.

2. Design-based certification. The process of certification is a business cost and lead time issue that may place a disproportionate burden on small entities, particularly importers. Certification is a fixed cost of doing business, which is potentially more burdensome on a unit-cost basis for small entities. It is potentially an even greater challenge, since some small entities will either contract emission testing to other parties or, in the case of importers, perhaps rely on off-shore manufacturers to develop and certify imported engines.

Small-volume manufacturers may use design-based certification, which allows us to issue a certificate to a small business for the emission-performance standard based on a demonstration that engines or vehicles of a similar design criteria meet the standards of the individual engine family. The small vehicle manufacturer must demonstrate that their engine uses a design similar to or superior to one that is being used by other manufacturers that has been shown through prior emission testing to meet the standards. The demonstration must be based in part on emission test data from engines of a similar design. Under a design-based certification program, a manufacturer provides evidence in the application for certification that an engine or vehicle meets the applicable standards for its useful life based on comparing its design (for example, the use a four-stroke engine, advanced fuel injection, or any other particular technology or calibration) to that of a previously tested engine. The design criteria might include specifications for engine type, calibrations (spark timing, air /fuel ratio, etc.), and other emission-critical features, including, if appropriate, catalysts (size, efficiency, precious metal loading). Manufacturers submit adequate engineering and other information about their individual designs showing that they will meet emission standards for the useful life.

3. Broaden engine families. Small businesses may define their engine families more broadly, putting all their models into one engine family (or more) for certification purposes. Manufacturers may then certify their engines using the ''worst-case'' configuration within the family.

A small manufacturer might need to conduct certification emission testing rather than pursuing design-based certification. Such a manufacturer would likely find broadened engine families useful.

4. Production-line testing waiver. As discussed above, manufacturers must test a small sampling of production engines to ensure that production engines meet emission standards. We are waiving production-line testing requirements for small manufacturers. This will eliminate or substantially reduce production-line testing requirements for small businesses.

5. Use of assigned deterioration factors for certification. Small manufacturers may use deterioration factors assigned by EPA. Rather than performing a durability demonstration for each family for certification, manufacturers may elect to use deterioration factors determined by us to demonstrate emission levels at the end of the useful life, thus reducing the development and testing burden. This might be a very useful and cost-beneficial option for a small manufacturer opting to perform certification emission testing instead of design-based certification.

6. Using emission standards and certification from other EPA programs. A wide array of engines certified to other EPA programs may be used in recreational vehicles. For example, there is a large variety of engines certified to EPA lawn and garden standards (Small SI). Manufacturers of recreational vehicles may use engines certified to any other EPA standards for five years. Under this approach, engines certified to the Small SI standards may be used in recreational vehicles. These engines would then meet the Small SI standards and related provisions rather than those adopted in this document for recreational vehicles. Small businesses using these engines will not have to recertify them, as long as they do not alter the engines in a way that might cause it to exceed the emission standards it was originally certified to meet. Also, the recreational vehicle application may not be the primary intended application for the engine.

Additionally, a certified snowmobile engine produced by a large snowmobile manufacturer may be used by a small snowmobile manufacturer, as long as the small manufacturer did not change the engine in a way that might cause it to exceed the snowmobile emission standards. This provides a reasonable degree of emission control. For example, if a manufacturer changed a certified engine only by replacing the stock exhaust pipes with pipes of similar configuration or the stock muffler and air intake box with a muffler and air box of similar air flow, the engine would still be eligible for this flexibility option, subject to our review. The manufacturer may also change the carburetor to have a leaner air-fuel ratio without losing eligibility. The manufacturer in such cases could establish a reasonable basis for knowing that emissions performance is not negatively affected by the changes. However, if the manufacturer changed the bore or stroke of the engine, it would no longer qualify, as emissions might increase beyond the level of the standard.

7. Averaging, banking, and trading. For the overall program, we are adopting corporate-average emission standards with opportunities for banking and trading of emission credits. We expect the averaging provisions to be most helpful to manufacturers with broad product lines. Small manufacturers and small importers with only a few models might not have as much opportunity to take advantage of these flexibilities. However, we received comment from one small manufacturer supporting these types of provisions as a critical component of the program. Therefore, we are adopting corporate-average emission standards with opportunities for banking and trading of emission credits for small manufacturers.

8. Hardship provisions. We are adopting provisions to address hardship circumstances, as described in Section VII.C.

9. Unique snowmobile engines. Even with the broad flexibilities described above, there may be a situation where a small snowmobile manufacturer cannot comply. Therefore, we are adopting an additional provision to allow a small

snowmobile manufacturer to petition us for relaxed standards for one or more engine families. The manufacturer must justify that the engine has unique design, calibration, or operating characteristics that make it atypical and infeasible or highly impractical to meet the emission-reduction requirements, considering technology, cost, and other factors. At our discretion, we may then set an alternative standard at a level between the prescribed standard and the baseline level, which would likely apply until the engine family is retired or modified in a way that might alter emissions. These engines will be excluded from averaging calculations. We proposed that this provision be limited to 300 snowmobiles per year. However, we received comment that this limit is too restrictive to be of much assistance to small businesses. Based on this comment we are adopting a limit for this provision of 600 snowmobiles per year.

F. Technological Feasibility of the Standards

1. Off-highway Motorcycles and ATVs

We believe the new emission standards are technologically feasible given the availability of emission-control technologies, as described below.

a. What are the baseline technologies and emission levels? As discussed earlier, off-highway motorcycles and ATVs are equipped with relatively small (48 to 650 cc) high-performance two-or four-stroke single cylinder engines that are either air-or liquid-cooled.[66] Since these vehicles are unregulated outside of the state of California, the main emphasis of engine design is on performance, durability, and cost and thus they generally have no emission controls. The fuel systems used on these engines are almost exclusively carburetted. Two-stroke engines lubricate the piston and crankshaft by mixing oil with the air and fuel mixture. This is accomplished by most contemporary two-stroke engines with a pump that sends two-cycle oil from a separate oil reserve to the carburetor where it is mixed with the air and fuel mixture. Some less expensive two-stroke engines require that the oil be mixed with the gasoline in the fuel tank. Four-stroke engines inject oil via a pump throughout the engine as the means of lubrication. With the exception of those vehicles certified in California, most of these engines are unregulated and thus have no emission controls. For ATVs, approximately 80-percent use four-stroke engines while only 55 percent of off-highway motorcycles use four-stroke engines. The average HC emissions for two-stroke engines are about 35 g/km, while the average for four-stroke engines are 1.5 g/km. CO emissions levels are very similar between the types of engines with two-stroke levels of approximately 34 g/km and four-stroke levels of 30 g/km. For performance and durability reasons, off-highway motorcycle and ATV engines all tend to operate with a ''rich'' air and fuel mixture. That is, they operate with excess fuel, which enhances performance and allows engine cooling to promote longer engine life. However, rich operation results in high levels of HC, CO, and PM emissions. Also, two-stroke engines tend to have high scavenging losses, where up to a third of the unburned air and fuel mixture goes out of the exhaust resulting in high levels of HC emissions.

b. What technology approaches are available to control emissions? Several approaches are available to control emissions from off-highway motorcycles and ATVs. The simplest approach consists of modifications to the base engine, fuel system, cooling system, and recalibration of the air and fuel mixture. These changes may include adjusting valve timing for four-stroke engines, changing from air-to liquid-cooling, and using advanced carburetion techniques or electronic fuel injection instead of traditional carburetion systems. Other approaches may include secondary air injected into the exhaust, an oxidation or three-way catalyst, or a combination of secondary air and a catalyst. The engine technology that may have the most potential for maximizing emission reductions from two-stroke engines is direct fuel injection. Direct fuel injection is able to reduce or even eliminate scavenging losses by pumping only air through the engine and then injecting fuel into the combustion chamber after the intake and exhaust ports have closed. Using oxidation catalysts with direct injection may reduce emissions even further. Finally, converting from two-stroke to four-stroke engine technology will significantly reduce HC emissions. All of these technologies have the capability to reduce HC and CO emissions.

We expect none of these technologies to negatively affect noise, safety, or energy factors. Fuel injection can improve the combustion process which can result in lower engine noise. The vast majority of four-stroke engines used in off-highway motorcycles and ATVs are considerably quieter than their two-stroke counterparts. Fuel injection has no impact on safety and four-stroke engines often have a more ''forgiving'' power band which means the typical operator may find the performance of the machine to be more reasonable and safe. Fuel injection, the enleanment of the air and fuel mixture and four-stroke technology all can result in significant reductions in fuel consumption.

c. What technologies are most likely to be used to meet emission standards?

Four-Stroke Engines

Most manufacturers have experience with four-stroke engine technology and currently have several models powered by four-stroke engines. This is especially true in the ATV market where four-stroke engines account for 80 percent of sales. Because four-stroke engines have been so prevalent over the last 10 years in the off-highway motorcycle and ATV industry, manufacturers have developed a high level of confidence in four-stroke technology and its application.

Manufacturers of off-highway motorcycles and ATVs utilizing four-stroke engines will need to make some minor calibration changes and improvements to the carburetor to meet emission standards for the 2006 model year. Some of these modifications may have already been incorporated in response to California requirements. The calibration changes will most likely consist of reducing the amount of fuel in the air-fuel mixture. This is commonly referred to as leaning out the air-fuel ratio. Although four-stroke engines produce considerably lower levels of HC than two-stroke engines, the four-stroke engines used in off-highway motorcycles and ATVs all tend to be calibrated to operate with a rich air-fuel ratio for performance and durability benefits. This rich operation results in high levels of CO, since CO is formed in the engine when there is a lack of oxygen to complete combustion. We believe that many of these engines are calibrated to operate richer than needed, because they have either never had to consider emissions when optimizing air-fuel ratio or those that are certified to the California standards can operate richer because the California ATV CO standards are fairly lenient. Carburetors with tighter tolerances ensure more precise flow of fuel and air, resulting in better fuel atomization (*i.e.*, smaller fuel droplets), better combustion, and lower emissions.

In addition to converting to four-stroke technology and making some minor calibration and carburetion improvements to meet the 2006

[66] The engines are small relative to automotive engines. For example, automotive engines typically range from one liter to well over five liters in displacement, whereas off-highway motorcycles range from 0.05 liters to 0.65 liters.

emission standards, manufacturers may need to use secondary air injection on some models. Secondary air has been used by passenger cars and highway motorcycles for many years as a means to help control HC and CO. The hot exhaust gases coming from the combustion chamber contain significant levels of unburned HC and CO. If sufficient oxygen is present, these gases will continue to react in the exhaust system, reducing the amount of pollution emitted into the atmosphere. To assure that sufficient oxygen is present in the exhaust, air is injected into the exhaust system. For off-highway motorcycles and ATVs, the additional air can be injected into the exhaust manifold using a series of check valves which use the normal pressure pulsations in the exhaust manifold to draw air from outside, commonly referred to as pulse air injection. We have tested several four-stroke ATVs with secondary air injected into the exhaust manifold and found that the HC and CO emission levels were below the standards (further details of our secondary air testing are described in the Final Regulatory Support Document).

A small number of models in California have been equipped with secondary air technology. It is likely that some manufacturers will opt to use secondary air systems to reduce emissions in addition to enleanment strategies to meet EPA standards. We believe this may be especially true for ATVs meeting the 1.5 g/km HC+NO_X standard. Using these systems would also provide manufacturers with more flexibility within the averaging scheme and would allow them to avoid any negative affects on performance that could accompany excessive enleanment. Also, several models are not certified to California standards, including some four-stroke models. Manufacturers may use secondary air on a more widespread basis to bring all models into compliance.

Since the emission standards address HC + NO_X, as well as CO, manufacturers will have to use an emission-control strategy or technology that doesn't cause NO_X emissions to increase disproportionately. However, since all of these vehicles operate with rich air-fuel ratios, as discussed above, NO_X levels from these engines are generally low and strategies designed to focus on HC reduction allow manufacturers to meet emission standards with no significant increase in NO_X levels.

Two-Stroke Engines

Off-highway motorcycles and ATVs using two-stroke engines will present a greater challenge for compliance with emission standards. Since baseline HC and CO emission levels are so high for two-stroke engines, it would be very difficult for any two-stroke engine to meet our standards with current production technologies. Although catalysts have been used for two-stroke powered mopeds, scooters, and small displacement highway motorcycles in Europe and Asia, the standards and test cycles are significantly different from ours and there is no way to make reasonable comparisons. We have not performed any testing, nor are we aware of any emission test data on the use of catalysts on ATV and off-highway motorcycle two-stroke engines. Therefore, we do not believe that catalysts would be available for two-stroke engines that would meet our standards in the time frame necessary to comply with our program. Direct fuel injection has been successfully applied to two-stroke engines used in marine personal water craft, outboard engines, and small mopeds and scooters and is just now being looked at for off-highway motorcycle applications. However, as discussed below, even this advanced technology cannot meet our standards alone.

As described in Section III.C.1.a, we are including an optional standard for off-highway motorcycles of 4.0 g/km HC + NO_X, for manufacturers willing to certify competition motorcycles that would otherwise be exempt from emission standards. We received comment from REV! Motorcycles in support of this level. Rev! plans to manufacture two-stroke off-highway motorcycles equipped with direct injection. Based on an early analysis of the technology, REV! requested that EPA consider establishing a 4.0 g/km standard to allow them to pursue the technology and have a realistic opportunity to meet emission standards. According to their comments, they believe that their engines will be capable of meeting the 4.0 g/km standard without the use of a catalyst. Perhaps most importantly, REV! believes that this is a viable technology approach for competition models, which have very high baseline emissions.

REV! shared their plans and emissions projections for a single prototype model of competition motorcycle. Production units, additional models, or motorcycles produced by other manufacturers using similar technologies may not be able to achieve the 4.0 g/km level. The 4.0 g/km level represents an HC reduction of 90 percent or more from baseline levels for some competition motorcycles, which is likely to be very challenging. This is one reason EPA is also allowing averaging, banking, and trading for this option. Averaging will provide flexibility to manufacturers who have some models that, while very clean relative to baseline levels, are above the 4.0 g/km standard. Manufacturers will be able to use credits, for example, from the sale of four-stroke machines with emissions below 4.0 g/km to achieve the 4.0 g/km standard on average.

2. Snowmobiles

a. What are the baseline technologies and emission levels? As discussed earlier, snowmobiles are equipped with relatively small high-performance two-stroke two and three cylinder engines that are either air-or liquid-cooled. Since these vehicles are currently unregulated, the main emphasis of engine design is on performance, durability, and cost and thus they have no emission controls. The fuel system used on these engines are almost exclusively carburetors, although some have electronic fuel injection. Two-stroke engines lubricate the piston and crankshaft by mixing oil with the air and fuel mixture. This is accomplished by most contemporary two-stroke engines with a pump that sends two-cycle oil from a separate oil reserve to the carburetor where it is mixed with the air and fuel mixture. Some less expensive two-stroke engines require that the oil be mixed with the gasoline in the fuel tank. Snowmobiles currently operate with a ''rich'' air and fuel mixture. That is, they operate with excess fuel, which enhances performance and allows engine cooling which promotes longer lasting engine life. However, rich operation results in high levels of HC, CO, and PM emissions. Also, two-stroke engines tend to have high scavenging losses, where up to a third of the unburned air and fuel mixture goes out of the exhaust resulting in high levels of raw HC. Current average snowmobile emission rates are 400 g/kW-hr (296 g/hp-hr) CO and 150 g/kW-hr (111 g/hp-hr) HC. There are however, at least two snowmobile models that use four-stroke engines. Two companies currently have a moderate-powered four-stroke touring model that has very low emissions. One sled uses a small advanced automotive engine, while the other uses a modified ATV engine. Both engines are very sophisticated, using electronic fuel injection and computer-based closed-loop control. The other snowmobile manufacturers are planning to release four-stroke models for the 2003 model year, but are focusing on higher performing models that, according to

the manufacturers, may not have as good of emissions control as the production four-stroke touring models.

b. What technology approaches are available to control emissions? We believe the new emission standards are technologically feasible. A variety of technologies are currently available or in stages of development to be available for use on two-stroke snowmobiles. These include improvements to carburetion (improved fuel control and atomization, as well as improved production tolerances), enleanment strategies for both carbureted and fuel injected engines, and semi-direct and direct fuel injection. In addition to these two-stroke technologies, converting to four-stroke engines is also feasible. Each of these is discussed in the following paragraphs.

There are several ways to improve carburetion in snowmobile engines. First, strategies to improve fuel atomization promote more complete combustion of the fuel/air mixture. Additionally, improved production tolerances enable more consistent fuel metering. Both of these changes allow more accurate control of air-fuel ratios. Snowmobile engines are currently calibrated with rich air-fuel ratios for durability reasons. Leaner calibrations to CO and HC emissions pose a challenge for maintaining engine durability, but many engine improvements are available to prevent problems. These include changes to the cylinder head, pistons, ports and pipes to reduce knock. In addition critical engine components can be made more robust to improve durability.

The same calibration changes to the air-fuel ratio just discussed for carbureted engines can also be employed, possibly with more accuracy, by using fuel injection. At least one major snowmobile manufacturer currently employs electronic fuel injection on several of its snowmobile models.

In addition to rich air-fuel ratios, one of the main reasons that two-stroke engines have such high HC emission levels is that they release a substantial amount of unburned fuel into the atmosphere as a result from scavenging losses, as described above. One way to reduce or eliminate such losses is to inject the fuel into the cylinder after the exhaust port has closed. This can be done by injecting the fuel into the cylinder through the transfer port (semi-direct injection) or directly into the cylinder (direct injection). Both of these approaches are currently being used successfully in two-stroke personal water craft engines. We believe these technologies hold promise for application to snowmobiles. In fact, one company is offering a snowmobile with a semi-direct injection two-stroke engine for the 2003 model year. Manufacturers must address a variety of technical design issues for adapting the technology to snowmobile operation, such as operating in colder ambient temperatures and at variable altitude. The averaging approach and the several years of lead time give manufacturers time to incorporate these development efforts into their overall research plan as they apply these technologies to snowmobiles.

In addition to the two-stroke technologies just discussed, using four-stroke engines in snowmobiles is another feasible approach to reduce emissions. Since they do not scavenge the exhaust gases with the incoming air-fuel mixture, four-stroke engines have inherently lower HC emissions compared to two-stroke engines. Four-stroke engines have a lower power-to-displacement ratio than two-stroke engines and are heavier. Thus, initially they may be more appropriate for snowmobile models where extreme power and acceleration are not the primary selling points. Such models include touring and sport trail sleds. However, one company has developed a four-stroke engine based off one of their sport highway motorcycle engines that produces 150 horsepower and will be used in their high-performance snowmobiles in the 2003 model year.

c. What technologies are most likely to be used to meet emission standards?

2006 Standards

We expect that, in the context of an emissions averaging program, manufacturers might choose to take different paths to meet the 2006 emission standards. We expect manufacturers to use a mix of technologies that will include improved carburetion and enleanment strategies, combined with engine modifications, the use of direct injection, and the use of four-stroke engine technology. For example, depending on their emission rates, one scenario for meeting our standards could be a mixture of 60 percent using improved carburetion, enleanment strategies, and engine modifications, 15 percent using direct injection, and another 15 percent using four-stroke engines. Manufacturers can expect moderate emission reductions from engine modifications and enleanment strategies. Most two-stroke snowmobile engines are designed to operate with a rich air and fuel mixture, which result in high levels of HC, CO, and PM. By reducing the amount of fuel in the air and fuel mixture (*i.e.*, enleanment), these emissions can be reduced. Because manufacturers use the extra fuel in the air and fuel mixture to help cool the engine, some modifications such as the use of more robust materials, may be necessary. Manufacturers have indicated to us that direct injection strategies can result in emission reductions of 70 to 75 percent for HC and 50 to 70 percent for CO. Certification results from 2000 model year outboard engines and personal water craft (PWC) support such reductions. We believe that as manufacturers learn to apply direct injection strategies they may choose to implement those technologies on some of their more expensive sleds and use less aggressive technologies, such as improved carburetion and enleanment on their lower performance models.

It appears that the use of four-stroke engines in snowmobiles will be more prevalent than we initially anticipated. For the 2003 model year, all four of the major snowmobile manufacturers will offer a four-stroke engine. Two manufacturers have already sold limited quantities of their four-stroke snowmobiles in 2002. All of these engines will be appearing in at least two different models and in some cases up to three or four models. The size and design of these engines is quite varied. All of the engines range in size from 650 cc to 1000 cc. There are two cylinder and four cylinder engines, fuel injected and carbureted, moderate horsepower and high horsepower. Manufacturers have indicated that depending on their success, four-stroke engines will play a large role in meeting our standards.

2010 Standards

As with the 2006 standards, we expect that manufacturers will use a mix of technologies to meet our 2010 standards. To meet the 2010 standards, manufacturers will need to employ the use of advanced technologies such as direct fuel-injection and four-stroke engines on a larger portion of their production. As noted above, manufacturers are beginning to introduce these technologies and will be gaining experience with them over the next several years. Because we are offering manufacturers the option to choose between two sets of standards in 2010, the mixture of technologies will be very manufacturer and engine family specific. For example, direct injection typically reduces CO significantly but does not reduce HC to the same extent as four-stroke engines. Engine families that manufacturers believe will be most compatible with direct injection technology would likely meet the 75 g/kW-hr HC and 200 g/kW-hr CO

standards. A potential scenario for meeting these standards could be a mixture of 50 percent direct injection, 20 percent four-stroke engines, and 30 percent with engine modifications. Engine families that manufacturers believe will be more compatible with four-stroke technology, which typically has superior HC emissions levels but do not necessarily have exceptionally good CO performance, will likely meet the 45 g/kW-hr HC and 275 g/kw-hr CO standards. Under either option, it is possible that manufacturers will continue to sell two-stroke models with lesser levels of technology. Manufacturers are likely to reduce emissions where possible from at least a portion of the remaining two-stroke engines through the use of engine modifications, calibration optimization, and secondary air systems. In some cases this will be necessary just to meet the FEL cap. A potential scenario for meeting these standards could be a mixture of 70 percent four-stroke engines, 10 percent direct fuel injection, and 20 percent with engine modifications.

IV. Permeation Emission Control

A. Overview

In the proposal we specified only exhaust emission controls for recreational vehicles. However, several commenters raised the issue of control of evaporative emissions related to permeation from fuel tanks and fuel hoses. The commenters stated that work done by California ARB on permeation emissions from plastic fuel tanks and rubber fuel line hoses for various types of nonroad equipment as well as portable plastic fuel containers raised a new emissions concern. Our own investigation into the hydrocarbon emissions related to permeation of fuel tanks and fuel hoses from recreational land-based and marine applications supports the concerns raised by the commenters. Therefore, on May 1, 2002, we reopened the comment period and requested comment on possible approaches to regulating permeation emissions from recreational vehicles. As a result of our investigations and the comments received, we have determined that it is appropriate to promulgate standards regulating permeation emissions from these vehicles.

This section describes the provisions for 40 CFR part 1051, which would apply only to recreational vehicle manufacturers. This section also discusses test equipment and procedures (for anyone who tests fuel tanks and hoses to show they meet emission standards) and general compliance provisions.

We are adopting performance standards intended to reduce permeation emissions from recreational vehicles. The standards, which apply to new vehicles starting in 2008, are nominally based on manufacturers reducing these permeation emissions from new vehicles by about 90 percent overall.[67] We also recognize that there are many small businesses that manufacture recreational vehicles. We are therefore adopting several special compliance provisions to reduce the burden of permeation emission regulations on small businesses. These special provisions are the same as for the exhaust emission standards, as applicable, and are discussed in Section III.E.

B. Vehicles Covered by This Provision

We are adopting new permeation emission standards for new off-highway motorcycles, all-terrain vehicles, and snowmobiles. These provisions apply even if the recreational vehicle manufacturer exercises the option to use an engine certified under another program such as the small spark ignition requirements in 40 CFR part 90. These standards would require these vehicle manufacturers to use low permeability fuel tanks and hoses. We include vehicles and fuel systems that are used in the United States, whether they are made domestically or imported.

Even though snowmobiles do not usually experience year around use, as is the case with ATVs and off-highway motorcycles, we are including snowmobiles in this standard because it is common practice among snowmobile owners to store their snowmobiles in the off-season with fuel in the tank (typically half full to full tank). A fuel stabilizer is typically added to the fuel to prevent gum, varnish, and rust from occurring in the engine as a result of the fuel sitting in the fuel tank and fuel system for an extended period of time; however, this does not reduce permeation. Thus, snowmobiles experience fuel permeation losses just like off-highway motorcycles and ATVs.

We are extending our basic nonroad exemptions to the engines and vehicles covered by this rule. These include the testing exemption, the manufacturer-owned exemption, the display exemption, and the national security exemption. These exemptions are described in more detail under Section VII.C. In addition, vehicles used solely for competition are not considered to be nonroad vehicles, so they are exempt from meeting the emission standards (but see discussion in Section III.C.1.a regarding the voluntary program for certification of all off-highway motorcycles).

C. Permeation Emission Standards

1. What Are the Emission Standards and Compliance Dates?

We are finalizing new standards that will require an 85-percent reduction in plastic fuel tank permeation and a 95-percent reduction in fuel system hose permeation from new recreational vehicles beginning in 2008. These standards and their implementation dates are presented in Table IV.C–1. Section IV.D presents the test procedures associated with these standards. Test temperatures are presented in Table IV.C–1 because they represent an important parameter in defining the emission levels.

We will base the permeation standards on the inside surface areas of the hoses and fuel tanks. We sought comment on whether the potential permeation standards for fuel tanks should be expressed as grams per gallon of fuel tank capacity per day or as grams per square meter of inside surface area per day. Although volume is generally used to characterize fuel tank emission rates, we base the standard on inside surface area because permeation is a function of surface area. In addition, the surface to volume ratio of a fuel tank changes with capacity and geometry of the tank. Two similar shaped tanks of different volumes or two different shaped tanks of the same volume could have different g/gallon/day permeation rates even if they were made of the same material and used the same emission-control technology. Therefore, we believe that using a $g/m^2/day$ form of the standard more accurately represents the emissions characteristics of a fuel tank and minimizes complexity. This approach was supported by the commenters.

[67] Estimated reductions in permeation are 95 percent when not considering competition vehicles, which are exempt from the standard.

TABLE IV.C–1.—PERMEATION STANDARDS FOR RECREATIONAL VEHICLES

Emission component	Implementation date	Standard	Test temperature
Fuel Tank Permeation	2008	1.5 g/m²/day	28 °C (82 °F)
Hose Permeation	2008	15 g/m²/day	23 °C (73 °F)

These standards are revised compared to the values we sought comment on in the notice. In the reopening of the comment period, we identified the need to accommodate variability and deterioration in setting the fuel tank permeation standard. Since the notice, we have received test information that suggests that a tank permeation standard representing an 85 rather than a 95-percent reduction would fully accommodate these factors. Nonetheless, we continue to believe that manufacturers will target control technologies and strategies focused on achieving reductions of 95 percent in production tanks. With regard to the permeation standard for hoses, we have adjusted the standard slightly to give the manufacturers more freedom in selecting their hose material and to accommodate the fact that we selected a certification test fuel based on a 10-percent ethanol blend, which would be prone to greater permeation than straight gasoline.

Cost-effective technologies exist to significantly reduce permeation emissions. Because essentially all of these vehicles use high density polyethylene (HDPE) fuel tanks, manufacturers would be able to choose from several technologies for providing a permeation barrier in HDPE tanks. The use of metal fuel tanks would also meet the standards, because metal tanks do not experience any permeation losses. The hose permeation standard can be met using barrier hose technology or through using low permeation automotive-type tubing. These technologies are discussed in Section IV.F. The implementation dates give manufacturers three to four years to comply. This will allow manufacturers time to implement controls in their tanks and hoses in an orderly business manner.

2. Will I Be Able to Average, Bank, or Trade Emissions Credits?

Averaging, banking, and trading (ABT) refers to the generation and use of emission credits based on certified emission levels relative to the standard. The general ABT concept is discussed in detail in Section II.C.3. In many cases, an ABT program can improve technological feasibility, provide manufacturers with additional product planning flexibility, and reduce costs which allows us to consider emission standards with the most appropriate level of stringency and lead time, as well as providing an incentive for the early introduction of new technology.

We are finalizing ABT for fuel tanks to facilitate the implementation of the standard across a variety of tank designs which include differences in wall thickness, tank geometry, material quality, and pigment in plastic fuel tanks. To meet the standard on average, manufacturers would be able to divide their fuel tanks into different emission families and certify each of their emission families to a different Family Emissions Level (FEL). The emission families would include fuel tanks with similar characteristics, including wall thickness, material used (including additives such as pigments, plasticizers, and UV inhibitors), and the emission-control strategy applied. The FELs would then be weighted by sales volume and fuel tank inside surface area to determine the average level across a manufacturer's total production. An additional benefit of a corporate-average approach is that it provides an incentive for developing new technology that can be used to achieve even larger emission reductions or perhaps to achieve the same reduction at lower costs or to achieve some reductions early.

Any manufacturer could choose to certify each of its evaporative emission control families at levels which would meet the standard. Some manufacturers may choose this approach as the could see it as less complicated to implement.

We are also finalizing a voluntary program intended to give an opportunity for manufacturers to prove out technologies earlier than 2008. Manufacturers will be able to use permeation control strategies early, and even if they do not meet the standard, they can earn credit through partial emission reduction that will give them more lead time to meet the standard. This program will allow a manufacturer to certify fuel tanks early to a less stringent standard and thereby delay the fuel tank permeation standard. Therefore, a manufacturer can earn more time to meet the 1.5 g/m²/day standard if they have an alternative approach that will reduce permeation by a lesser amount earlier than 2008. Specifically, if a manufacturer certifies fuel tanks early to a standard of 3.0 g/m²/day, they can delay the 1.5 g/m²/day standard for these fuel tanks by 1 tank-year for every tank-year of early certification. As an alternative, this delay could be applied to other fuel tanks provided that these tanks have an equal or smaller inside surface area and meet a level of 3.0 g/m²/day. As an example, suppose a manufacturer were to sell 50 vehicles in 2006 and 75 vehicles in 2007 with fuel tanks that meet a level of 3.0 g/m²/day. This manufacturer would then be able to sell 125 vehicles with fuel tanks that meet a level of 3.0 g/m²/day in 2008 and later years. No uncontrolled tanks could be sold after 2007. In addition to providing implementation flexibility to manufacturers, this option, if used, would result in additional and earlier emission reductions.

For hoses, we do not believe that ABT provisions would result in a significant technological benefit to manufacturers. We believe that all fuel hoses can meet the permeation standards using straight forward technology as discussed in Section IV.F. From EPA's perspective, including an ABT program in the rule creates a long-term administrative burden that is not worth taking on since it does not provide the industry with useful flexibility.

3. How Do I Certify My Products?

We are finalizing a certification process similar to our existing program for other mobile sources. Manufacturers test representative prototype designs and submit the emission data along with other information to EPA in an application for a Certificate of Conformity. As discussed in Section IV.D.3, we will allow manufacturers to certify based on either design (for which there is already data) or by conducting its own emissions testing. If we approve the application, then the manufacturer's Certificate of Conformity allows the manufacturer to produce and sell the vehicles described in the application in the U.S.

Manufacturers certify their fuel systems by grouping them into emission families that have similar emission characteristics. The emission family definition is fundamental to the certification process and to a large

degree determines the amount of testing required for certification. The regulations include specific characteristics for grouping emission families for each category of tanks and hoses. For fuel tanks, key parameters include wall thickness, material used (including additives such as pigments, plasticizers, and UV inhibitors), and the emission-control strategy applied. For hoses, key parameters include material, wall thickness, and emission-control strategy applied. To address a manufacturer's unique product mix, we may approve using broader or narrower engine families. The certification process for vehicle permeation is similar as for the process for certifying engines (see Section II.C.1).

4. What Durability Provisions Apply?

We are adopting several additional provisions to ensure that emission controls will be effective throughout the life of the vehicle. This section discusses these provisions for permeation from recreational vehicles. More general certification and compliance provisions, which apply across different vehicle categories, are discussed in Sections II and VII, respectively.

a. How long do my vehicles have to comply? Manufacturers would be required to build fuel systems that meet the emission standards over each vehicle's useful life. For the permeation standards, we use the same useful life as discussed in Section III.C.4.a for exhaust emissions from recreational vehicle engines based on the belief that fuel system components and engines are intended to have the same design life. Further, we are applying the same warranty period for permeation emission related components of the fuel system as for exhaust emission-related components of the vehicle (See Section III.C.4.b).

b. How do I demonstrate emission durability? We are adopting several additional provisions to ensure that emission controls will be effective throughout the life of the vehicle. Vehicle manufacturers must demonstrate that the permeation emission-control strategies will last for the useful life of the vehicle. Any deterioration in performance would have to be included in the family emissions limit. This section discusses durability provisions for fuel tanks and hoses.

For plastic fuel tanks, we are specifying a preconditioning and four durability steps that must be performed in conjunction with the permeation testing for certification to the standard. These steps, which include fuel soaking, slosh, pressure-vacuum cycling, temperature cycling, and ultra-violet light exposure, are described in more detail in Section IV.D.1. The purpose of these preconditioning steps is to help demonstrate the durability of the fuel tank permeation control under conditions that may occur in use. For fuel hoses, the only preconditioning step that we are requiring is a fuel soak to ensure that the permeation rate is stabilized prior to testing. Data from before and after the durability tests would be used to determine deterioration factors for the certified fuel tanks. The durability factors would be applied to permeation test results to determine the certification emission level of the fuel tank at full useful life. The manufacturer would still be responsible for ensuring that the fuel tank and hose meet the permeation standards throughout the useful life of the vehicle.

We recognize that vehicle manufacturers will likely depend on suppliers/vendors for treated tanks and fuel hoses. We believe that, in addition to normal business practices, our testing requirements will help assure that suppliers/vendors consistently meet the performance specifications laid out in the certificate.

D. Testing Requirements

To obtain a certificate allowing sale of products meeting EPA emission standards, manufacturers generally must show compliance with such standards through emission testing. The test procedures for determining permeation emissions from fuel tanks and hoses on recreational vehicles are described below. This section also discusses design-based certification as an alternative to performing specific testing.

1. What Are the Test Procedures for Measuring Permeation Emissions From Fuel Tanks?

Prior to testing the fuel tanks for permeation emissions, the fuel tank must be preconditioned by allowing the tank to sit with fuel in it until the hydrocarbon permeation rate has stabilized. Under this step, the fuel tank must be filled with a 10-percent ethanol blend in gasoline (E10), sealed, and soaked for 20 weeks at a temperature of 28 ± 5°C. Once the soak period has ended, the fuel tank is drained, refilled with fresh fuel, and sealed. The permeation rate from fuel tanks is measured at a temperature of 28 ± 2°C over a period of at least 2 weeks. Consistent with good engineering judgment, a longer period may be necessary for an accurate measurement for fuel tanks with low permeation rates. Permeation loss is determined by measuring the weight of the fuel tank before and after testing and taking the difference. Once the mass change is determined it is divided by the manufacturer provided tank surface area and the number of days of soak to get the emission rate. As an option, permeation may be measured using alternative methods that will provide equivalent or better accuracy. Such methods include enclosure testing as described in 40 CFR part 86. The fuel used for this testing will be a blend of 90-percent gasoline and 10-percent ethanol. This fuel is consistent with the test fuel used for highway evaporative emission testing.

To determine permeation emission deterioration factor, we are specifying three durability tests: slosh testing, pressure-vacuum cycling, and ultra-violet exposure. The purpose of these deterioration tests is to help ensure that the technology is durable and the measured emissions are representative of in-use permeation rates. For slosh testing, the fuel tank is filled to 40-percent capacity with E10 fuel and rocked for 1 million cycles. The pressure-vacuum testing contains 10,000 cycles from −0.5 to 2.0 psi. These two durability tests are based on draft recommended SAE practice.[68] The third durability test is intended to assess potential impacts of UV sunlight (0.2 μm—0.4 μm) on the durability of the surface treatment. In this test, the tank must be exposed to a UV light of at least 0.40 W-hr/m2 /min on the tank surface for 15 hours per day for 30 days. Alternatively, it can be exposed to direct natural sunlight for an equivalent period of time.

We originally sought comment on applying the procedures in 49 CFR part 173, appendix B, but upon further evaluation and receipt of additional information found these inadequate for our purposes. The 49 CFR part 173 test procedure is designed for testing plastic receptacles for transporting hazardous chemicals. This test focus on temperatures and durability procedures that do not represent recreational vehicle use.

2. What Are the Test Procedures for Measuring Permeation Emissions From Fuel System Hoses?

The permeation rate of fuel from hoses would be measured at a temperature of 23 ± 2°C using SAE

[68] Draft SAE Information Report J1769, ''Test Protocol for Evaluation of Long Term Permeation Barrier Durability on Non-Metallic Fuel Tanks,'' (Docket A–2000–01, document IV–A–24).

method J30[69] with E10. The hose must be preconditioned with a fuel soak to ensure that the permeation rate has stabilized. The fuel to be used for this testing would be a blend of 90-percent gasoline and 10-percent ethanol. This fuel is consistent with the test fuel used for highway evaporative emission testing. Alternatively, for purposes of submission of data at certification, permeation could be measured using alternative equipment and procedures that provide equivalent results. To use these alternative methods, manufacturers would have to apply to us and demonstrate equivalence. Examples of alternative approaches that we anticipate manufacturers may use are the recirculation technique described in SAE J1737,[70] enclosure-type testing such as in 40 CFR part 86, or weight loss testing such as described in SAE J1527.[71]

3. Can I Certify Based on Engineering Design Rather Than Through Testing?

In general, test data would be required to certify fuel tanks and hoses to the permeation standards. Test data could be carried over from year to year for a given emission-control design. We do not believe the cost of testing tanks and hose designs for permeation would be burdensome especially given that the data could be carried over from year to year, and that there is a good possibility that the broad emission family concepts would lead to minimum testing. However, there are some specific cases where we would allow certification based on design. These special cases are discussed below.

We would consider a metal fuel tank to meet the design criteria for a low permeation fuel tank because fuel does not permeate through metal. However, we would not consider this design to be any more effective than any other low permeation fuel tank for the purposes of any sort of credit program. Although metal is impermeable, seals and gaskets used on the fuel tank may not be. The design criteria for the seals and gaskets would be that either they would not have a total exposed surface area exceeding 1000 mm^2, or the seals and gaskets would have to be made of a material with a permeation rate of 10 g/m^2/day or less at 23°C as measured under ASTM D814.[72] A metal fuel tank with seals that meet this design criteria would readily pass the standard.

Fuel hoses can be certified by design as being manufactured in compliance with certain accepted SAE specifications. Specifically, a fuel hose meeting the SAE J30 R11–A or R12 requirements could be design-certified to the standard. In addition, fuel line meeting the SAE J2260[73] Category 1 requirements could be design-certified to the standard. These fuel hoses and fuel line specifications are based on 15-percent methanol fuel and higher temperatures. We believe that fuel hoses and lines that are tested and meet these requirements would also meet our hose permeation standards because both are generally acknowledged as representing more stringent test parameters. In the future, if new SAE specifications are developed which are consistent with our hose permeation standards, we would consider including hoses meeting the new SAE requirements as being able to certify by design.

At certification, manufacturers will have to submit an engineering analysis showing that the tank or hose designs will meet the standards throughout their full useful life. The tanks and hoses will remain subject to the emission standards throughout their useful lives. The design criteria relate only to the issuance of a certificate.

E. Special Compliance Provisions

We believe that the permeation control requirements will be relatively easy for small businesses to meet, given the relatively low cost of the requirements and the availability of materials and treatment support by outside vendors. Low permeation fuel hoses are available from vendors today, and we would expect that surface treatment would be applied through an outside company. However, to minimize any additional burden these requirements may impose on small manufacturers, we are implementing, where they are applicable to permeation, the same options we proposed for the exhaust emission standards. These options for small recreational vehicle manufacturers are described in detail in Section III.E.

F. Technological Feasibility

We believe there are several strategies that manufacturers can use to meet our permeation emission standards. This section gives an overview of this technology. See Chapters 3 and 4 of the Final Regulatory Support Document for more detail on the technology discussed here.

1. Implementation Schedule

The permeation emission standards for fuel tanks become effective in the 2008 model year. Several technologies are available that could be used to meet this standard. Surface treatments to reduce tank permeation are widely used today in other container applications, and the technology and production facilities needed to conduct this process exist. Selar is used by at least one portable fuel tank manufacturer and has also been used in automotive applications. Plastic tanks with coextruded barriers have been used in automotive applications for years. However, fuel tanks used in recreational vehicles are primarily (but not exclusively) high-density polyethylene tanks with no permeation control. We received comments from manufacturers that they would not be able to comply with permeation standards until 2008 or 2009. They stated that, especially for fuel tanks, they would need this extra lead time to ensure that the useful life requirement can be met on their products. At the same time, others commented that the technology is already available and that the permeation standards should apply in 2004. We believe it is appropriate to give manufacturers until the 2008 model year for the fuel tank permeation standards. Manufacturers will need lead time to allow for durability testing and other development work associated with applying this technology to recreational vehicles. This is especially true for manufacturers or vendors who choose to set up their own sulfonation or fluorination facilities in-house.

We believe that the low permeation hose technology can also be applied in the 2008 time frame. A lower permeation fuel hose exists today known as the SAE R9 hose that is as flexible as the SAE R7 hose used in most recreational applications today. These SAE hose specifications are contained in SAE J30 cited above. This hose would meet our permeation standard on gasoline, but probably not on a 10-percent ethanol blend. As noted in Chapter 4 of the Final Regulatory Support Document, barrier materials typically used in R9 hose today may have permeation rates 3 to 5 times

[69] SAE Recommended Practice J30, ''Fuel and Oil Hoses,'' June 1998, (Docket A–2000–01, document IV–A–92).

[70] SAE Recommended Practice J1737, ''Test Procedure to Determine the Hydrocarbon Losses from Fuel Tubes, Hoses, Fittings, and Fuel Line Assemblies by Recirculation,''1997, (Docket A–2000–01, document, IV–A–34).

[71] SAE Recommended Practice J1527, ''Marine Fuel Hoses,''1993, (Docket A–2000–01, document IV–A–19).

[72] ASTM Standard Test Method D 814–95 (Reapproved 2000), ''Rubber Property—Vapor Transmission of Volatile Liquids,'' (Docket A–2000–01, document IV–A–95).

[73] SAE Recommended Practice J2260, ''Nonmetallic Fuel System Tubing with One or More Layers,''1996, (Docket A–2000–01, document IV–A–18).

higher on a 10-percent ethanol blend than on straight gasoline. However, there are several lower permeability barrier materials that can be used in rubber hose that will comply with the hose permeation requirement on a 10-percent ethanol blend and still be flexible enough for use in recreational vehicles. This hose is available for automotive applications at this time, but some lead time may be required to apply these hoses to recreational vehicles if hose connection fitting changes were required. For these reasons, we are implementing the hose permeation standard on the same schedule as the tank permeation standards.

2. Standard Levels

We have identified several strategies for reducing permeation emissions from fuel tanks and hoses. We recognize that some of these technologies may be more desirable than others for some manufacturers, and we recognize that different strategies for equal emission reductions may be better for different applications. A specific example of technology that could be used to meet the fuel tank permeations would be surface barrier treatments such as sulfonation or fluorination. With these surface treatments, more than a 95-percent reduction in permeation emissions from new fuel tanks is feasible. However, variation in material tolerances and in-use deterioration can reduce this effectiveness. Given the lead time for the standards, manufacturers will be able to provide fuel tanks with consistent material quality, and the surface treatment processes can be optimized for a wide range of material qualities and additives such as pigments, plasticizers, and UV inhibitors. We do not expect a large deterioration in use; however, data on slosh testing suggest that some deterioration may occur. To accommodate variability and deterioration, we are finalizing a standard that represents about an 85-percent reduction in permeation emissions from plastic fuel tanks. It is our expectation that manufacturers will aim for a surface treatment effectiveness rate as near to 100 percent a practical for new tanks. Therefore, even with variability and deterioration in use, control rates are likely to exceed 85 percent. Several materials are available today that could be used as a low permeation barrier in rubber hoses. We present more detail on these and other technological approaches below.

3. Technological Approaches

a. Fuel tanks. Blow molding is widely used for the manufacture of small fuel tanks of recreational vehicles. Typically, blow molding is performed by creating a hollow tube, known as a parison, by pushing high-density polyethylene (HDPE) through an extruder with a screw. The parison is then pinched in a mold and inflated with an inert gas. In highway applications, non-permeable plastic fuel tanks are produced by blow molding a layer of ethylene vinyl alcohol (EVOH) or nylon between two layers of polyethylene. This process is called coextrusion and requires at least five layers: the barrier layer, adhesive layers on either side of the barrier layer, and HDPE as the outside layers which make up most of the thickness of the fuel tank walls. However, multi-layer construction requires two additional extruder screws which significantly increases the cost of the blow molding process. Multi-layer fuel tanks can also be formed using injection molding. In this method, a low viscosity polymer is forced into a thin mold to create each side of the fuel tank. The two sides are then welded together. To add a barrier layer, a thin sheet of the barrier material is placed inside the mold prior to injection of the poleythylene. The polyethylene, which generally has a much lower melting point than the barrier material, bonds with the barrier material to create a shell with an inner liner.

A less expensive alternative to coextrusion is to blend a low permeable resin in with the HDPE and extrude it with a single screw. The trade name typically used for this permeation control strategy is Selar. The low permeability resin, typically EVOH or nylon, creates non-continuous platelets in the HDPE fuel tank which reduce permeation by creating long, tortuous pathways that the hydrocarbon molecules must navigate to pass through the fuel tank walls. Although the barrier is not continuous, this strategy can still achieve greater than a 90-percent reduction in permeation of gasoline. EVOH has much higher permeation resistance to alcohol than nylon; therefore, it would be the preferred material to use for meeting our standard which is based on testing with a 10-percent ethanol fuel.

Another type of low permeation technology for fuel tanks would be to treat the surfaces of a plastic fuel tanks with a barrier layer. Two ways of achieving this are known as fluorination and sulfonation. The fluorination process causes a chemical reaction where exposed hydrogen atoms are replaced by larger fluorine atoms which creates a barrier on the surface of the fuel tank. In this process, a batch of fuel tanks are generally processed post production by stacking them in a steel container. The container is then voided of air and flooded with fluorine gas. By pulling a vacuum in the container, the fluorine gas is forced into every crevice in the fuel tanks. As a result of this process, both the inside and outside surfaces of the fuel tank would be treated. As an alternative, fuel tanks can be fluorinated on-line by exposing the inside surface of the fuel tank to fluorine during the blow molding process. However, this method may not prove as effective as off-line fluorination which treats the inside and outside surfaces.

Sulfonation is another surface treatment technology where sulfur trioxide is used to create the barrier by reacting with the exposed polyethylene to form sulfonic acid groups on the surface. Current practices for sulfonation are to place fuel tanks on a small assembly line and expose the inner surfaces to sulfur trioxide, then rinse with a neutralizing agent. However, sulfonation can also be performed using a batch method. Either of these processes can be used to reduce gasoline permeation by more than 95 percent.

Over the first month or so of use, polyethylene fuel tanks can expand by as much as three percent due to saturation of the plastic with fuel. Manufacturers have raised the concern that this hydrocarbon expansion could affect the effectiveness of surface treatments like fluorination or sulfonation. We believe this will not have a significant effect on the effectiveness of these surface treatments. California ARB has performed extensive permeation testing on portable fuel containers with and without these surface treatments. Prior to the permeation testing, the tanks were prepared by first performing a durability procedure where the fuel container is cycled a minimum of 1000 times between −1 psi and 5 psi. In addition, the fuel containers are soaked with fuel for a minimum of four weeks prior to testing. Their test data, presented in Chapter 4 of the Final Regulatory Support Document show that fluorination and sulfonation are still effective after this durability testing.

Manufacturers have also commented that fuel sloshing in the fuel tank, under normal in-use operation, could wear off the surface treatments. However, we do not believe that this is likely. These surface treatments actually result in an atomic change in the structure of the

outside surface of the fuel tank. To wear off the treatment, the plastic would need to be worn away on the outside surface. In addition, testing by California ARB shows that the fuel tank permeation standard can be met by fuel tanks that have been sloshed for 1.2 million cycles. Test data on an sulfonated automotive HDPE fuel tank after five years of use showed no deterioration in the permeation barrier. This data are presented in Chapter 4 of the Final Regulatory Support Document.

Permeation can also be reduced from fuel tanks by constructing them out of a lower permeation material than HDPE. For instance, metal fuel tanks would not permeate. In addition, there are grades of plastics other than HDPE that could be molded into fuel tanks. One commenter suggested nylon; however, although nylon has excellent permeation resistance on gasoline, it has poor chemical resistance to alcohol-blended fuels. Other materials, which have excellent permeation even with alcohol-blended fuels are acetal copolymers and thermoplastic polyesters. At this time, these materials are generally much more expensive than HDPE.

b. Hoses. Fuel hoses produced for use in recreational vehicles are generally extruded nitrile rubber with a cover for abrasion resistance. Lower permeability fuel hoses produced today for other applications are generally constructed in one of two ways: either with a low permeability layer or by using a low permeability rubber blend. By using hose with a low permeation thermoplastic layer, permeation emissions can be reduced by more than 95 percent. Because the thermoplastic layer is very thin, on the order of 0.1 to 0.2 mm, the rubber hose retains its flexibility. Two thermoplastics which have excellent permeation resistance, even with an alcohol-blend fuel, are ETFE and THV.[74]

In automotive applications, multilayer plastic tubing, made of fluoropolymers is generally used. An added benefit of these low permeability lines is that some fluoropolymers can be made to conduct electricity and therefore can prevent the buildup of static charges. Although this technology can achieve more than an order of magnitude lower permeation than barrier hoses, it is relatively inflexible and may need to be molded in specific shapes for each recreational vehicle design. Manufacturers have commented that they would need flexible hose to fit their many designs, resist vibration, and to simplify the hose connections and fittings.

An alternative approach to reducing the permeability of fuel hoses would be to apply a surface treatment such as fluorination or sulfonation. This process would be performed in a manner similar to discussed above for fuel tanks.

4. Conclusions

The standards for permeation emissions from recreational vehicles reasonably reflect what manufacturers can achieve through the application of available technology. Manufacturers will have several years of lead time to select, design, and produce permeation emission-control strategies that will work best for their product lines. We expect that meeting these requirements will pose a challenge, but one that is feasible taking into consideration the availability and cost of technology, lead time, noise, energy, and safety. The role of these factors is presented in detail in Chapters 3 and 4 of the Final Regulatory Support Document.

The permeation standards are based on the effective application of low permeable materials or surface treatments. This is a step change in technology; therefore, we believe that even if we set a less stringent permeation standard, these technology options would likely still be used. In addition, this technology is relatively inexpensive and can achieve meaningful emission reductions. The standards are expected to achieve more than an 85-percent reduction in permeation emissions from fuel tanks and more than 95 percent from hoses. We believe that more stringent standards could result in significantly more expensive materials without corresponding additional emission reduction. In addition, the control technology would generally pay for itself over time by conserving fuel that would otherwise evaporate. The projected costs and fuel savings are discussed in Chapter 5 of the Final Regulatory Support Document.

V. Large Spark-Ignition (SI) Engines

A. Overview

This section applies to most nonroad spark-ignition engines rated over 19 kW (''Large SI engines''). The emission standards will lead to emission reductions of about 90 percent for CO, NO_X, and HC. Since the emission standards are based on engine testing with broadly representative duty cycles, these estimated reductions apply to all types of equipment using these engines. Reducing Large SI engine emissions will help reduce ozone and CO concentrations and will also be valuable to individuals operating these engines in areas with limited fresh air circulation. The cost of applying the anticipated emission-control technology to these engines is offset by much greater cost savings from reduced fuel consumption over the engines' operating lifetime, as described in the Final Regulatory Support Document.

This section describes the requirements that apply to engine manufacturers. See Section II for a description of our general approach to regulating nonroad engines and how manufacturers show that they meet emission standards. See Section VII for additional requirements for engine manufacturers, equipment manufacturers, and others. See Section VIII for general provisions related to testing equipment and procedures.

B. Large SI Engines Covered by This Rule

Large SI engines covered in this section power nonroad equipment such as forklifts, sweepers, pumps, and generators. This includes marine auxiliary engines, but does not include marine propulsion engines or engines used in recreational vehicles (snowmobiles, off-highway motorcycles, and all-terrain vehicles). These other nonroad applications are addressed elsewhere in this document.

This final rule applies only to spark-ignition engines. Our most recent rulemaking for nonroad diesel engines adopted a definition of ''compression-ignition'' that addressed the status of alternative-fuel engines (63 FR 56968, October 23, 1998). We are adopting updated definitions consistent with those already established in previous rulemakings to clarify that all reciprocating internal combustion engines are either spark-ignition or compression-ignition.[75] These new definitions apply to 40 CFR parts 89 and 1048. Spark-ignitions include gasoline-fueled engines and any others that control power with a throttle and follow the theoretical Otto cycle. Compression-ignition engines are any reciprocating internal-combustion engines that are not spark-ignition engines. Under these definitions, it is possible for a diesel-derived engine to fall under the spark-ignition program. We believe the requirements adopted in this rule are feasible and appropriate for these engines. However, we will allow such engines over 250 kW to instead meet the requirements that apply to nonroad

[74] ethylene-tetrafluoro-ethylene (ETFE), tetra-fluoro-ethylene, hexa-fluoro-propylene, and vinyledene fluoride (THV).

[75] Gas turbines are non-reciprocating internal combustion engines.

diesel engines. We believe this is appropriate for several reasons. First, the technology requirements are comparable between programs. The nonroad diesel emission standards, which apply over the longer useful life characteristic of diesel engines, are slightly more stringent for CO and slightly less stringent for $HC+NO_X$. The calibration changes needed to adjust these emission levels are not fundamental to the overall design of the emission-control system. Second, the diesel engine manufacturers producing these engines are already set up to do testing based on test procedures that apply to diesel engines. To the extent that they would incur costs to be able to run test procedures specified for Large SI engines, these costs would likely not correspond with improving emission-controls. Third, these engines share important technical characteristics with diesel engines and are likely to experience in-use operation that is more like that of nonroad diesel engines. In addition, they are installed in applications that also use diesel engines, not Large SI engines.

Several types of engines are excluded or exempted from these new regulations. The following sections describe the types of special provisions that apply uniquely to nonrecreational spark-ignition engines rated over 19 kW. Section VII.C covers several additional exemptions that apply generally across programs.

1. Stationary Engine Exclusion

Consistent with the Clean Air Act, stationary-source engines are not nonroad engines, so the emission standards don't apply to engines used in stationary applications. In general, an engine that would otherwise be considered a Large SI engine is not considered a nonroad engine if it will be either installed in a fixed position or if it will be a portable (or transportable) engine operating for at least one-year periods without moving throughout its lifetime. We are adopting the same definitions for these engines that have already been established for other programs. These stationary engines (that would otherwise qualify as Large SI engines) must have an engine label identifying their excluded status. This is especially valuable for importing excluded engines without complication from U.S. Customs officials. It also helps us ensure that such engines are legitimately excluded from emission standards.

2. Exclusion for Engines Used Solely for Competition

For Large SI engines we proposed the existing regulatory definition for nonroad engines, with excludes engines used solely for competition. As described in the proposed rule, we are not aware of any manufacturers producing new engines that are intended only for competition. As a result, we are not adopting any specific provisions addressing a competition exclusion for manufacturers. Part 1068 of the regulations includes provisions addressing the practice of modifying certified engines for competition (see Section VII.C).

3. Motor Vehicle Engine Exemption

In some cases an engine manufacturer may want to modify a certified automotive engine for nonroad use to sell the engine without recertifying it as a Large SI engine. We are therefore adopting an exemption from the Large SI standards in 40 CFR part 1048 for engines that are already certified to the emission standards in 40 CFR part 86 for highway applications. To qualify for this exemption from separately certifying to nonroad standards, the manufacturer must makes no changes to the engine that might affect its exhaust or evaporative emissions. Companies using this exemption must report annually to us, including a list of its exempted engine models. For engines included under this provision, manufacturers of the vehicle or engine must generally meet all the requirements from 40 CFR part 86 that would apply if the engine were used in a motor vehicle. Section 1048.605 of the regulations describes the qualifying criteria and responsibilities in greater detail.

We generally prohibit equipment or vehicle manufacturers from producing new nonroad equipment that does not have engines certified to nonroad emission standards. However, in some cases a manufacturer may want to produce vehicles certified to highway emission standards for nonroad use. We are providing an exemption for these manufacturers, as long as there is no change in the vehicle's exhaust or evaporative emission-control systems. For example, a mining company may want to use a pickup truck for dedicated work at a mine site, but special-order the trucks from the manufacturer with modifications that cause the truck to no longer qualify as a motor vehicle. Manufacturers may produce such a modified version of a truck that has been certified to the motor-vehicle standards, as long as the modifications don't affect its emissions.

4. Lawn and Garden Engine Exemption

Most Large SI engines, rated over 19 kW, have a total displacement greater than one liter. The design and application of the few Large SI engines currently being produced with displacement less than one liter are very similar to those of engines rated below 19 kW, which are typically used for lawn and garden applications. As described in the most recent rulemaking for these smaller engines, manufacturers may certify engines between 19 and 30 kW with total displacement of one liter or less to the requirements we have already adopted in 40 CFR part 90 for engines below 19 kW (see 65 FR 24268, April 25, 2000). We are not changing this provision, and engines so certified would not be subject to the requirements that apply to Large SI engines. This approach allows manufacturers of small air-cooled engines to certify their engines rated between 19 and 30 kW with the program adopted for the comparable engines with slightly lower power ratings. This is also consistent with the provisions adopted by California ARB, except for the addition of the 30-kW cap to prevent treating high-power engines under the program that applies to lawn and garden engines.

Technological, economic, and environmental issues associated with the few engine models with rated power over 19 kW, but with displacement at or below 1 liter, were previously analyzed in the rulemaking for nonroad spark-ignition engines below 19 kW. This rule therefore does not specifically address the provisions applying to them or repeat the estimated impacts of adopting emission standards.

Conversely, we are aware that some engines rated below 19 kW may be part of a larger family of engine models that includes engines rated above 19 kW. This may include, for example, three- and four-cylinder engine models that are otherwise identical. To avoid the need to separate these engines into separate engine families (certified under completely different control programs), manufacturers may certify any engine rated under 19 kW to the more stringent Large SI emission standards. Such an engine is then exempt from the requirements of 40 CFR part 90.

C. Emission Standards

In October 1998, California ARB adopted emission standards for Large SI engines. We are extending these requirements to the rest of the U.S. in the near term. We are also revising the

emission standards and adding various provisions in the long term, as described below. The near-term and the long-term emission standards are based on three-way catalytic converters with electronic fueling systems to control emissions, and differ primarily in terms of how well the controls are optimized. In addition to the anticipated emission reductions, we project that these technologies will provide large savings to operators as a result of reduced fuel consumption and other performance improvements.

An important element of the control program is the attempted harmonization with the requirements adopted by California ARB. We are aware that inconsistent or conflicting requirements may lead to additional costs. Cooperation between agencies has allowed a great degree of harmonization. In addition to the common structure of the programs, the specific provisions that make up the certification requirements and compliance programs are consistent with very few exceptions. In most of the cases where individual provisions differ, the EPA language is more general than that adopted by California, rather than being incompatible. The following sections describe the requirements in greater detail.

1. What Are the Emission Standards and Compliance Dates?

a. Exhaust emissions. We are adopting standards starting in the 2004 model year consistent with those adopted by California ARB. These standards, which apply to testing only with the applicable steady-state duty cycles, are 4.0 g/kW-hr (3.0 g/hp-hr) for HC+NO_X emissions and 50 g/kW-hr (37 g/hp-hr) for CO emissions. See Section V.D for further discussion of the steady-state duty cycles. We expect manufacturers to meet these standards using three-way catalytic converters and electronically controlled fuel systems. These systems are similar to those used for many years in highway applications, but not necessarily with the same degree of sophistication.

Adopting emission standards for these engines starting in 2004 allows a relatively short lead time. However, manufacturers will be able to achieve this by expanding their production of the same engines they will be selling in California at that time. We have designed our 2004 standards to require no additional development, design, or testing beyond what California ARB already requires. Adopting these near-term emission standards allows us to set early requirements to introduce the low-emission technologies for substantial emission reductions with minimal lead time. The final requirements includes two principal adjustments to align with the California ARB standards. First, we specify that manufacturers' deterioration factors for 2004 through 2006 model years should be based on emission measurements over 3500 hours of engine operation, rather than the full useful life of 5000 hours. Second, for those same model years, we are applying an emission standard of 5.4 g/kW-hr (4.0 g/hp-hr) HC+NO_X for any in-use testing to account for the potential for additional deterioration beyond 3500 hours. This allowance for higher in-use emissions is a temporary provision to ensure the feasibility of compliance in the early years of the program. Testing has shown that with additional design time, manufacturers can incorporate emission-control technologies with sufficient durability that the long-term standards do not require a separate in-use standard. This is separate from the field-testing standards described below.

Testing has shown that additional time to optimize designs to better control emissions will allow manufacturers to meet significantly more stringent emission standards that are based on more robust measurement procedures. We are therefore adopting a second tier of standards to require additional emission reductions. These later standards require manufacturers to control emissions under both steady-state and transient engine operation, as described in Section V.D below). Setting the emission standards to require additional control involves separate consideration of the achievable level of control for HC+NO_X and CO emissions. While HC+NO_X emissions contribute to nonattainment of ozone air quality standards, CO emissions contribute to nonattainment of CO air quality standards and potentially harmful exposures of individuals where engines are operating in areas where fresh airflow may be restricted. Emission-control technology is able to simultaneously control these three pollutants, but a tradeoff between NO_X and CO emissions persists for any given system. This relationship is determined by an engine's precise control of air-fuel ratios—shifting to air-fuel ratios slightly lean of stoichiometric increases NO_X emissions but decreases CO emissions and vice versa. Engines using different fuels face this same situation, though gasoline engines operating under heavy load generally need to shift to richer air-fuel ratios to prevent accelerated engines wear from very high combustion temperatures.

Our primary focus in setting the level of the emission standards is reductions in emissions that contribute to ambient air-pollution problems. At the same time, we recognize that these engines are used in many applications where there are concerns about personal exposure to the engine exhaust, including workplace exposure, focusing primarily on CO exposure. It is appropriate to take such concerns into consideration in setting the level of the standards. In this case, where the equipment using these engines can vary substantially and where the emission-control technology means there is a trade-off between HC+NO_X control and CO control, it is difficult to set a single, optimal standard for all three pollutants. In such a situation it is reasonable to have more than one set of standards to allow an engine to use technologies focused on controlling the pollutants of most concern for a specific application.

We are not in a position, however, to readily identity the specific levels of alternative standards that are appropriate for each application or to pick specific applications that should go with different standards. We also want to ensure that engines significantly reduce emissions of all three pollutants.

To address this, we are setting a combination of standards requiring more effective emission controls starting with the 2007 model year. First, we are setting benchmark emission standards of 2.7 g/kW-hr (2.0 g/hp-hr) for HC+NO_X emissions and 4.4 g/kW-hr (3.3 g/hp-hr) for CO emissions. The emission standards apply to measurements during duty-cycle testing under both steady-state and transient operation, including certification, production-line testing, and in-use testing.[76] These emission levels provide for substantial control of HC+NO_X emissions (in fact, these standards are more stringent than those proposed), but also contain substantial control of CO emissions to protect against individual exposure as well as CO nonattainment.

We are also including an option for manufacturers to certify their engines to different emission levels to allow manufacturers to build engines whose emission controls are more weighted toward controlling NO_X emissions to reflect the inherent tradeoff of NO_X and CO emissions. Generally this involves meeting a less stringent CO standard if a manufacturer certifies an engine with lower HC+NO_X emissions. Table V.C–1 shows several examples of possible combinations of HC+NO_X and CO emission standards. The highest allowable CO standard is 20.6 g/kW-hr (15.4 g/hp-hr), which corresponds with HC+NO_X emissions below 0.8 g/kW-hr

[76] See Section V.D for a discussion of duty cycles.

(0.6 g/hp-hr). Manufacturers certify to any $HC+NO_X$ level between and including 0.8 and 2.7 g/kW-hr, rounding to the nearest 0.1 g/kW-hr. They will certify also to the corresponding CO level, as calculated using the formula below, again rounding to the nearest 0.1 g/kW-hr.

TABLE V.C–1.—SAMPLES OF POSSIBLE ALTERNATIVE DUTY-CYCLE EMISSION STANDARDS FOR LARGE SI ENGINES(G/KW-HR)*

$HC+NO_X$	CO
2.7	4.4
2.2	5.6
1.7	7.9
1.3	11.1
1.0	15.5
0.8	20.6

* As described in the Final Regulatory Support Document and the regulations, the values in the table are related by the following formula: $(HC+NO_X) \times CO^{0.784} = 8.57$. These values follow directly from the logarithmic relationship presented with the proposal in the Draft Regulatory Support Document.

We believe this flexible approach to setting standards is the most appropriate and efficient way to allocate the different design strategies to achieve effective reductions of $HC+NO_X$ emissions while providing for the best control of CO emissions where it is most needed. Testing has shown that emission controls are more likely to experience degradation with respect to controlling CO emissions than HC or NO_X emissions. Manufacturers therefore have a natural incentive to certify engine families with an $HC+NO_X$ emission level as low as possible to increase the compliance margin for meeting the CO standard. In addition, many of these engines will be used in applications where ozone is of more concern. As a result, we expect manufacturers to design most of their engines to operate substantially below the 2.7 g/kW-hr standard for $HC+NO_X$ emissions. This approach also encourages manufacturers to continually improve their control of $HC+NO_X$ emissions over time. At the same time, to the extent that purchasers want engines with low CO emission levels, particularly for exposure-related concerns, manufacturers will be able to produce compliant engines that will provide appropriate protection. Note that engines operating at the highest allowable CO emission levels under the 2007 standards will still be substantially reducing CO emissions compared with baseline levels. The emission standards in this final rule will achieve substantial reductions, but are not designed to guarantee workplace safety or to set a safety standard. Rather, we intend to facilitate the use of engine-based control technologies so that owners and operators can purchase equipment to help them address these concerns.

We are not adopting any controls or limits to restrict the sale of engines meeting certain requirements into certain applications. We believe that the manufacturers and customers for these products will together make educated choices regarding the appropriate mix of emission controls for each application and that market forces will properly balance emission controls for the different pollutants in specific applications. We believe that customers for these applications, some of whom are subject to occupational air-quality standards for related pollutant concentrations, will be well placed to make informed choices regarding air-pollution control, especially given their ability to make choices based on the specific environmental circumstances of each particular customer.[77]

We are adopting field-testing standards of 3.8 g/kW-hr (2.8 g/hp-hr) for $HC+NO_X$ and 6.5 g/kW-hr (4.9 g/hp-hr) for CO. As described above for duty-cycle testing, field-testing allows for the same pattern of optional emission standards to reflect the tradeoff of CO and NO_X emissions. See Section V.D.5 for more information about field testing.

As described in Chapter 4 of the Final Regulatory Support Document, we believe manufacturers can achieve these emission standards by optimizing currently available three-way catalysts and electronically controlled fuel systems.

Two additional provisions apply to specific situations. First, some engines need to operate with rich air-fuel ratios at high loads to protect the engine from overheating. This is especially true for gasoline-fueled engines, which typically experience higher combustion temperatures. When operating at such air-fuel ratios, the engines may be unable to meet the CO emission standard during steady-state testing because the steady-state duty cycle involves sustained operation under high-load conditions, unlike the transient duty cycle. If a manufacturer shows us that this type of engine operation keeps it from meeting the CO emission standard shown above for specific models, we will approve a separate CO emission standard of 31.0 g/kW-hr that would apply only to steady-state testing. This standard reflects the adjustment needed at high-load operation and would apply to any steady-state tests for certification, production-line testing, or in-use testing. To prevent high in-use emission levels, we are adopting several additional provisions related to this separate CO standard. Manufacturers must show that enrichment is necessary to protect the engine from damage and that enrichment will be limited to operating modes that require additional cooling to protect the engine from damage. In addition, manufacturers must show in their application for certification that enrichment will rarely occur in the equipment in which your engines are installed (for example, an engine that is expected to operate 5 percent of the time in use with enrichment would clearly not qualify). Finally, manufacturers must include in the emission-related installation instructions any steps necessary for someone installing the engines to prevent enrichment during normal operation. This option does not apply to transient or field testing, so these engines would need to meet the same formula for $HC+NO_X$ and CO standards that apply to other engines for transient testing and for field testing. By tying the CO standard for these engines to the highest allowable CO emission level for field testing, we are effectively requiring that manufacturers ensure that in-use engines employ engine-protection strategies no more frequently than is reflected in the steady-state duty cycles for certification.

Second, equipment manufacturers have made it clear that some nonroad applications involve operation in severe environments that require the use of air-cooled engines. These engines rely on air movement instead of an automotive-style water-cooled radiator to maintain acceptable engine temperatures. Since air cooling is less effective, these engines rely substantially on enrichment to provide additional cooling relative to water-cooled engines. At these richer air-fuel ratios, catalysts are able to reduce NO_X emissions but oxidation of CO emissions is much less effective. As a result, we are adopting emission standards for these ''severe-duty'' engines of 2.7 g/kW-hr for $HC+NO_X$ and 130 g/kW-hr for CO. These standards apply to duty-cycle

[77] While the emission standards in this final rule require substantial emission reductions of CO and other harmful pollutants from nonroad engines, this does not replace the need for ongoing regulation of air quality to protect occupational safety and health. More specifically, in accordance with the limitations provided in Section 310(a) of the Clean Air Act (42 U.S.C. section 7610(a)), nothing in this rule affects the Occupational Safety and Health Administration's authority to enforce standards and other requirements under the Occupational Safety and Health Act of 1970 (29 U.S.C. sections 651 *et seq.*).

emission testing for both steady-state and transient measurements (for certification, production-line, and in-use testing). The corresponding field-testing standards are 3.8 g/kW-hr for $HC+NO_X$ and 200 g/kW-hr for CO. Severe-duty applications include concrete saws and concrete pumps. These types of equipment are exposed to high levels of concrete dust, which tends to form a thick insulating coat around any heat-exchanger surfaces and exposes engines to highly abrasive dust particles. Manufacturers may request approval in identifying additional severe-duty applications subject to these less stringent standards if they can provide clear evidence that the majority of installations need air-cooled engines as a result of operation in a severe-duty environment. This arrangement generally prevents these higher-emitting engines from gaining a competitive advantage in markets that don't already use air-cooled engines.

We believe three years between phases of emission standards allows manufacturers enough lead time to meet the more stringent emission standards. The projected emission-control technologies for the 2004 emission standards should be capable of meeting the 2007 emission levels with additional optimization and testing. In fact, manufacturers may be able to apply their optimization efforts before 2004, leaving only the additional testing demonstration for complying with the 2007 standards. The biggest part of the optimization effort may be related to gaining assurance that engines will meet field-testing emission standards described in Section V.D.5, since engines will not be following a prescribed duty cycle.

For engines fueled by gasoline and liquefied petroleum gas (LPG), we specify emission standards based on total hydrocarbon measurements, while California ARB standards are based on nonmethane hydrocarbons. We believe that switching to measurement based on total hydrocarbons simplifies testing, especially for field testing of in-use engines with portable devices (See Section V.D.5). To maintain consistency with California ARB standards in the near term, we will allow manufacturers to base their certification through 2006 on either nonmethane or total hydrocarbons (see 40 CFR 1048.145). Methane emissions from controlled engines operating on gasoline or LPG are about 0.1 g/kW-hr.

Operation of natural gas engines is very similar to that of LPG engines, with one noteworthy exception. Since natural gas consists primarily of methane, these engines have a much higher level of methane in the exhaust. Methane generally does not contribute to ozone formation, so it is often excluded from emission measurements. We have therefore specified nonmethane hydrocarbon emissions for comparison with the standard for natural gas engines. However, the emission standards based on measuring emissions in the field depend on total hydrocarbons. We are therefore adopting a NO_X-only field-testing standard for natural gas engines instead of a $HC+NO_X$ standard. Since control of NO_X emissions for natural gas engines poses a significantly greater challenge than controlling nonmethane hydrocarbons, duty-cycle testing provides adequate assurance that these engines have sufficiently low hydrocarbon emission levels. Manufacturers must show that they meet these duty-cycle standards for certification and the engines remain subject to the nonmethane hydrocarbon standard in-use when tested over the same duty-cycles.

b. Evaporative emissions. We are adopting requirements related to evaporative and permeation emissions from gasoline-fueled Large SI engines. For controlling diurnal emissions, we are adopting an emission standard of 0.2 grams of hydrocarbon per gallon of fuel tank capacity during a 24-hour period. In addition, we specify that manufacturers use fuel lines meeting an industry standard for permeation-resistance. Finally, we require that manufacturers take steps to prevent fuel from boiling. We expect certification of manufacturers' equipment to be design-based, as compared with conducting a full emission-measurement program during certification. As such, meeting these evaporative requirements is much more like meeting the requirements related to controlling crankcase emissions and is therefore discussed in detail in Section V.C.4 below.

2. May I Average, Bank, or Trade Emission Credits?

We are not including an averaging, banking, and trading program for certifying engines. As described in Chapter 4 of the Final Regulatory Support Document, we believe that manufacturers will generally be able to rely on a relatively uniform application of emission-control technology to meet emission standards. The standards were selected based on the capabilities of all manufacturers to comply with all their models without an emission-credit program. Moreover, overlaying an emission-credit program on the flexible standards described above would be highly impractical. If such a program could be devised it would need to be very complex and would achieve little, if any, advantage to manufacturers beyond the advantages already embodied in the flexible approach we are adopting.

However, as an alternative to a program of calculating emission credits for averaging, banking, and trading, we are adopting a simpler approach of ''family banking'' to help manufacturers transition to new emission standards (see 40 CFR 1048.145 of the regulations). Manufacturers may certify an engine family early, which would allow them to delay certification of smaller engine families. This would be based on the actual sales of each engine family; this requires no calculation or accounting of emission credits. The manufacturer would have actual sales figures for the early family at the end of the production year, which would yield a total number of allowable sales for the engine family with delayed compliance. Manufacturers may certify engines to the 2004 standards early, but this would provide benefits only for complying with the 2004 standards. These ''credits'' would not apply to engines for meeting the 2007 standards.

3. Is EPA Adopting Voluntary Blue Sky Standards for These Engines?

We are adopting voluntary Blue Sky standards for Large SI engines. We are setting a target of 0.8 g/kW-hr (0.6 g/hp-hr) $HC+NO_X$ and 4.4 g/kW-hr (3.3 g/hp-hr) CO as a qualifying level for Blue Sky Series engines. The corresponding field-testing standards for Blue Sky Series engines are 1.1 g/kW-hr (0.8 g/hp-hr) $HC+NO_X$ and 6.6 g/kW-hr (4.9 g/hp-hr) CO. These voluntary standards are based on achieving the maximum control of both $HC+NO_X$ and CO emissions, as described in Section V.C.1. To achieve these emission levels, manufacturers will need to apply significantly additional technology beyond that required for the mandatory standards.

Manufacturers may start producing engines to these voluntary standards immediately after this final rule becomes effective. In addition, we are adopting interim voluntary standards corresponding with the introduction of new emission standards. Since manufacturers will not be complying early to bank emission credits, voluntary emission standards are an appropriate way to encourage manufacturers to meet emission standards before the regulatory deadline. If manufacturers certify engines to these voluntary standards, they are not eligible for participation in the family-banking program described

above. In the 2003 model year, manufacturers may certify their engines to the requirements that apply starting in 2004 to qualify for the Blue Sky designation. Since manufacturers are producing engines with emission-control technologies starting in 2001, these engines are available to customers outside of California desiring emission reductions or fuel-economy improvements. Similarly, for 2003 through 2006 model years, manufacturers may certify their engines to the requirements that start to apply in 2007.

4. Are There Other Requirements for Large SI Engines?

a. Crankcase emissions. Due to blowby of combustion gases and the reciprocating action of the piston, exhaust emissions (mostly hydrocarbons) can accumulate in the crankcase. These crankcase emissions are significant, representing about 33 percent of total exhaust hydrocarbon. Uncontrolled engines route these vapors directly to the atmosphere. We have long required that automotive engines prevent crankcase emissions. Manufacturers typically do this by routing crankcase vapors through a valve into the engine's air intake system where they are burned in the combustion process.

Manufacturers may choose one of two methods for controlling crankcase emissions. First, adding positive-crankcase ventilation prevents crankcase emissions. Since automotive engine blocks are already tooled for closed crankcases, the cost of adding a valve for positive-crankcase ventilation for most engines is very small. An alternative method addresses specific concerns related to turbocharged engines or engines operating in severe-duty environments. Where closed crankcases are impractical, manufacturers may therefore measure crankcase emissions during any emission testing to add crankcase emissions to measured exhaust emissions for comparing with the standards.

b. Diagnosing malfunctions. Manufacturers must design their Large SI engines to diagnose malfunctioning emission-control systems starting with the 2007 model year (see § 1048.110). Three-way catalyst systems with closed-loop fueling control work well only when the air-fuel ratios are controlled to stay within a narrow range around stoichiometry.[78] Worn or broken components or drifting calibrations over time can prevent an engine from operating within the specified range. This increases emissions and can significantly increase fuel consumption and engine wear. The operator may or may not notice the change in the way the engine operates. We are not requiring similar diagnostic controls for recreational vehicles or recreational marine diesel engines, because the anticipated emission-control technologies for these other applications are generally less susceptible to drift and gradual deterioration.

This diagnostic requirement focuses solely on maintaining stoichiometric control of air-fuel ratios. This kind of design detects problems such as broken oxygen sensors, leaking exhaust pipes, fuel deposits, and other things that require maintenance to keep the engine at the proper air-fuel ratio.

Some companies are already producing engines with diagnostic systems that check for consistent air-fuel ratios. Their initiative supports the idea that diagnostic monitoring provides a mechanism to help keep engines tuned to operate properly, with benefits for both controlling emissions and maintaining optimal performance. There are currently no inspection and maintenance programs for nonroad engines, so the most important variable in making the emission control and diagnostic systems effective is in getting operators to repair the engine when the diagnostic light comes on. This calls for a relatively simple design to avoid the signaling of false failures as much as possible. The diagnostic requirements in this rule therefore focus on detecting inappropriate air-fuel ratios, which is the most likely failure mode for three-way catalyst systems. The malfunction-indicator light must go on when an engine runs for a full minute under closed-loop operation without reaching a stoichiometric air-fuel ratio.

Some natural gas engines may meet standards with lean-burn designs that never approach stoichiometric combustion. While manufacturers may design these engines to operate at specific air-fuel ratios, catalyst conversion (with two-way catalysts) would not be as sensitive to air-fuel ratio as with stoichiometric designs. For these or other engines that rely on emission-control technologies incompatible with the diagnostic system described above, manufacturers must devise an alternate system that alerts the operator to engine malfunctions that would prevent the emission-control system from functioning properly.

The automotive industry has developed a standardized protocol for diagnostic systems, including hardware specifications, and uniform trouble codes. In the regulations we reference standards adopted by the International Organization for Standardization (ISO) for automotive systems. If manufacturers find that these standards are not applicable to the simpler diagnostic design specified for Large SI engines, we encourage engine manufacturers to cooperate with each other and with other interested companies to develop new standards specific to nonroad engines. Manufacturers may request approval to use systems that don't meet the automotive specifications if those specifications are not practical or appropriate for their engines.

c. Evaporative emissions. Evaporative emissions occur when fuel evaporates and is vented into the atmosphere. They can occur while an engine or vehicle is operating and even while it is not being operated. Among the factors that affect evaporative emissions are:

- Fuel metering (fuel injectors or carburetor)
- The degree to which fuel permeates fuel lines and fuel tanks
- Proximity of the fuel tank to the exhaust system or other heat sources
- Whether the fuel system is sealed and the pressure at which fuel vapors are ventilated.

In addition, some gasoline fuel tanks may be exposed to heat from the engine compartment and high-temperature surfaces such as the exhaust pipe. In extreme cases, fuel can start boiling, producing very large amounts of gasoline vapors vented directly to the atmosphere.

Evaporative emissions from Large SI engines and the associated equipment represent a significant part of their overall hydrocarbon emissions. The magnitude of evaporative emissions varies widely depending on the engine design and application. LPG-fueled equipment generally has very low evaporative emissions because of the tightly sealed fuel system. At the other extreme, carbureted gasoline-fueled equipment can have high rates of evaporation. In 1998, Southwest Research Institute measured emissions from several gasoline-fueled Large SI engines and found them to vary from about 12 g/day up to almost 100 g/day.[79]

[78] Stoichiometry is the proportion of a mixture of air and fuel such that the fuel is fully oxidized with no remaining oxygen. For example, stoichiometric combustion in gasoline engines typically occurs at an air-fuel mass ratio of about 14.7.

[79] ''Measurement of Evaporative Emissions from Off-Road Equipment,'' by James N. Carroll and Jeff J. White, Southwest Research Institute (SwRI 08–

Continued

This study did not take into account the possibility of unusually high fuel temperatures during engine operation, as described further below.

We are adopting basic measures to reduce evaporative emissions from gasoline-fueled Large SI engines. First, we are adopting an evaporative emission standard of 0.2 grams per gallon of fuel tank capacity for 24-hour day when temperatures cycle between 72° and 96° F. For purposes of certification, manufacturers may choose, however, to rely on a specific design for certification instead of measuring emissions. We have identified a technology that adequately prevents evaporative emissions such that the design itself would be enough to show compliance with the evaporative emission standard for purposes of certification. Specifically, pressurized fuel tanks control evaporative emissions by suppressing vapor generation. In its standards for industrial trucks operating in certain environments, Underwriters Laboratories requires that trucks use self-closing fuel caps with tanks that stay sealed to prevent evaporative losses; venting is allowed for positive pressures above 3.5 psi or for vacuum pressures of at least 1.5 psi.[80] We know that any Large SI engines or vehicles operating with these pressures would meet the standard because test data confirm the basic chemistry principles related to phase-change pressure relationships showing that fuel tanks will remain sealed at all times during the prescribed test procedure. Also, similar to the Underwriters Laboratories' requirement, we specify that manufacturers must use self-closing or tethered fuel caps to ensure that fuel tanks designed to hold pressure are not inadvertently left exposed to the atmosphere.

In some applications, manufacturers may want to avoid high fuel-tank pressures. Manufacturers may be able to meet the standard using an air bladder inside the fuel tank that changes in volume to keep the system in equilibrium at atmospheric pressure.[81] We have data showing that these systems also would remain sealed at all times during the prescribed test procedure. However, the permeation levels related to the air bladder and the long-term durability of this type of system are still unknown. Once these parameters are established with test data, perhaps with some additional product development, this technology may then qualify as an option for design-based certification. Similarly, collapsible bladder tanks, which change in volume to prevent generation of a vapor space or vapor emissions, may eventually be available as a technology for design-based certification once permeation data are available to confirm that systems with these tanks would meet the standard. Finally, an automotive-type system that stores fuel tank vapors for burning in the engine would be another alternative technology, though it is unlikely that such a system can be simply characterized and included as an option for design-based certification.

In addition, engine manufacturers must use (or specify that equipment manufacturers installing their engines use) fuel lines meeting the industry performance standard for permeation-resistant fuel lines developed for motor vehicles.[82] While metal fuel lines do not have problems with permeation, manufacturers should use discretion in selecting materials for grommets and valves connecting metal components to avoid high-permeation materials. Evaporative emission standards for motor vehicles have led to the development of a wide variety of permeation-resistant polymer components. These permeation requirements are based on manufacturers using a more effective emission controls than that specified for recreational vehicles. This is appropriate because Large SI manufacturers are able to use automotive-grade materials across their product line, while recreational vehicle manufacturers have pointed out various limitations in incorporating automotive-grade materials. Conversely, Large SI manufacturers are not subject to permeation requirements related to fuel tanks, since almost all of these tanks are made of metal.

Finally, based on available technologies, manufacturers must take steps to prevent fuel boiling. The Underwriters Laboratories specification for forklifts attempts to address this concern through a specified maximum fuel temperature, but the current limit does not prevent fuel boiling.[83] We are adopting a standard that prohibits fuel boiling during continuous operation at 30° C (86° F). Engine manufacturers must incorporate designs that reduce the heat load to the fuel tank to prevent boiling. For companies that sell loose engines, this may involve instructions to equipment manufacturers to help ensure, for example, that fuel tank surfaces are exposed to ambient air rather than to exhaust pipes or direct engine heat. Engine manufacturers may specify a maximum fuel temperature for the final installation. Such a temperature limit should be well below 53° C (128° F), the temperature at which summer-grade gasoline (9 RVP) typically starts boiling.

An additional source of evaporative emissions is from carburetors. Carburetors often have high hot soak emissions (immediately after engine shutdown). We expect manufacturers to convert carbureted designs to fuel injection as a result of the exhaust emission standards. While we do not mandate this technology, we believe the need to reduce exhaust emissions will cause engine manufacturers to use fuel injection on all gasoline engines. This change alone will eliminate most hot soak emissions.

Engine manufacturers using design-based certification need to describe in the application for certification the selected design measures and specifications to address evaporative losses from gasoline-fueled engines. For loose-engine sales, this includes emission-related installation instructions that the engine manufacturer gives to equipment manufacturers. While equipment manufacturers must follow these installation instruction, the engine manufacturer has the responsibility to certify a system that meets the evaporative-related requirements described in this section. This should work in practice, because engine manufacturers already provide equipment manufacturers a variety of specifications and other instructions to ensure that engines operate properly in-use after installation in the equipment. The alternative approach of requiring equipment manufacturers to certify is impractical because of the very large number of companies involved.

5. What Durability Provisions Apply?

a. Useful life. We are adopting a useful life period of seven years or until the engine accumulates at least 5,000 operating hours, whichever comes first. This figure represents a minimum value and may increase as a result of data showing that an engine model is designed to last longer. This figure,

1076), November 1998, Docket A–2000–01, document II–A–10.

[80] ''Industrial Trucks, Internal Combustion Engine-Powered,'' UL558, ninth edition, June 28, 1996, paragraphs 26.1 through 26.4, Docket A–2000–01, document II–A–28. See Section XI.I for our consideration of incorporating the UL requirements into our regulations by reference.

[81] ''New Evaporative Control System for Gasoline Tanks,'' EPA Memorandum from Charles Moulis to Glenn Passavant, March 1, 2001, Docket A-2000–01, document II–B–16.

[82] SAE J2260 ''Nonmetallic Fuel System Tubing with One or More Layers,'' November 1996 (Docket A–2000–01, document II–A–03).

[83] UL558, paragraph 19.1.1, Docket A–2000–01, document II–A–28.

which California ARB has already adopted, represents an operating period that is common for Large SI engines before they undergo rebuild. This also reflects a comparable degree of operation relative to the useful life values of 100,000 to 150,000 miles that apply to automotive engines (assuming an average driving speed of 20 to 30 miles per hour).

Some engines are designed for operation in severe-duty applications with a shorter expected lifetime. Concrete saws in particular undergo accelerated wear as a result of operating in an environment with high concentrations of highly abrasive, airborne concrete dust particles. We are allowing manufacturers to request a shorter useful life for an engine family based on information showing that engines in the family rarely operate beyond the alternative useful-life period. For example, if engines powering concrete saws are typically scrapped after 2000 hours of operation, this would form the basis for establishing a shorter useful-life period for those engines.

Manufacturers relying on design-based certification to meet the evaporative requirements must use good engineering judgment to show that emission controls will work for at least seven years. This may, for example, be based on warranty or product-performance history from component suppliers. This also applies for systems designed to address crankcase emissions.

b. Warranty. Manufacturers must provide an emission-related warranty for at least the first half of an engine's useful life (in operating hours) or three years, whichever comes first. These periods must be longer if the manufacturer offers a longer mechanical warranty for the engine or any of its components; this includes extended warranties that are available for an extra price. The emission-related warranty includes components related to controlling evaporative and crankcase emissions. In addition, we are adopting the warranty provisions adopted by California ARB for high-cost parts. For emission-related components whose replacement cost is more than about $400, we specify a minimum warranty period of at least 70 percent of the engine's useful life (in operating hours) or 5 years, whichever comes first. See § 1048.120 for a description of which components are emission-related.

c. Maintenance instructions. We are specifying minimum maintenance intervals much like those established by California ARB for Large SI engines. The minimum intervals define how much maintenance a manufacturer may specify to ensure that engines are properly maintained for staying within emission standards. Manufacturers may schedule maintenance on catalysts, fuel injectors, electronic control units and turbochargers after 5,000 hours. For oxygen sensors and cleaning of fuel-system components, the minimum maintenance interval is 2,500 hours. This fuel-system cleaning must be limited to steps that can be taken without disassembling components. We have relaxed this from the proposed interval of 4,500 hours to take into account comments emphasizing that these maintenance steps will be necessary more frequently than the proposed interval; this shorter interval also reflects the comparable provisions that apply to automotive systems.

We are also proposing a diagnostic requirement to ensure that prematurely failing oxygen sensors or other components are detected and replaced on an as-needed basis. If operators fail to address faulty components after a fault signal, we would not consider that engine to be properly maintained. This could the engine ineligible for manufacturer in-use testing.

d. Deterioration factors. We are adopting an approach that gives manufacturers wide discretion in how to establish deterioration factors for Large SI engines. The general expectation is that manufacturers will rely on emission measurements from engines that have operated for an extended period, either in field service or in the laboratory. The manufacturer should do testing as needed to be confident that their engines will meet emission standards under the in-use testing program. In deciding to certify an engine family, we can review deterioration factors to ensure that the projected deterioration accurately predicts in-use deterioration. We will use results under the in-use testing program to verify the appropriateness of deterioration factors.

In the first two or three years of certification, manufacturers will not yet have data from the in-use testing program. Moreover, manufacturers may choose to rely on technologies and calibrations for meeting the long-term standards well before 2007 to simplify their product-development efforts. We are therefore allowing manufacturers to rely on an assigned deterioration factor to meet the 2004 standards, while continuing to require manufacturers to meet the applicable emission standards throughout the useful life for these engines. The assigned deterioration factor may be derived from any available data that would help predict the way these systems would perform in the field, using good engineering judgment.

Manufacturers may develop deterioration factors for crankcase and evaporative controls. However, we do not expect these control technologies to experience degradation that would cause a deterioration factor to be appropriate.

e. In-use fuel quality. Gasoline used in industrial applications is generally the same as that used for automotive applications. Improvements that have been made to highway-grade gasoline therefore carry over directly to nonroad markets. This helps manufacturers be sure that fuel quality will not degrade an engine's emission-control performance after several years of sustained operation.

In contrast, there are no enforceable industry or government standards for LPG fuel quality. Testing data indicate that varying fuel quality has a small direct effect on emissions from a closed-loop engine with a catalyst. The greater concern is that fuel impurities and heavy-end hydrocarbons may cause an accumulation of deposits that can prevent an emission-control system from functioning properly. While an engine's feedback controls can compensate for some restriction in air- and fuel-flow, deposits may eventually prevent the engine from accurately controlling air-fuel ratios at stoichiometry. As described in the Final Regulatory Support Document, test data show that emission-control systems can tolerate substantial fuel-related deposits before there is any measurable effect on emissions. Moreover, the engine diagnostic systems described in the next section will notify the operator when fuel-related deposits prevent an engine from operating at stoichiometry. In any case, a routine cleaning step should remove deposits and restore the engine to proper functioning.

Data from in-use testing will provide additional information related to the effects of varying fuel quality on emission levels. This information will be helpful in making sure that the deterioration factors for certifying engines accurately reflect the whole range of in-use operating variables, including varying fuel quality. Our testing shows that fuel properties of conventional commercial LPG fuel allow for durable, long-term control of emissions. However, to the extent that engines operating in specific areas have inferior fuel quality that prevents them from meeting emission standards, we will be pursuing nationwide requirements to set minimum quality standards for in-use LPG fuel.

D. Testing Requirements and Supplemental Emission Standards

1. What Duty Cycles Are Used To Measure Emissions?

For 2004 through 2006 model years, we specify the same steady-state duty cycles adopted by California ARB. For variable-speed engines, this involves the testing based on the ISO C2 duty cycle, which has five modes at various intermediate speed points, plus one mode at rated speed and one idle mode. The combined intermediate-speed points at 10, 25, and 50 percent account for over 70 percent of the total modal weighting. A separate duty cycle for the large number of Large SI engine providing power for constant-speed applications, such as generators, welders, compressors, pumps, sweepers, and aerial lifts. Constant-speed testing is based on the ISO D2 duty cycle, which specifies engine operation at rated speed with five different load points. This same steady-state duty cycle applies to constant-speed, nonroad diesel engines. Emission values measured on the D2 duty cycle are treated the same as values from the C2 duty cycle; the same numerical standards apply to both cycles.

Manufacturers must generally test engines on both the C2 and D2 duty cycles. Since the C2 cycle includes very little operation at rated speed, it is not effective in ensuring control of emissions for constant-speed engines. The D2 cycle is even less capable of predicting emission performance from variable-speed engines. Manufacturers may, however, choose to certify their engines on only one of these two steady-state duty cycles. In this case, they would need to take steps to make sure C2-certified engines are installed only in variable-speed applications and D2-certified engines are installed only in constant-speed applications. Engine manufacturers would do this by labeling their engines appropriately and providing installation instructions to make sure equipment manufacturers and others are aware of the restricted certification. Equipment manufacturers are required under the regulations to follow the engine manufacturer's emission-related installation instructions.

Starting in 2007, we specify an expanded set of duty cycles, again with separate treatment for variable-speed and constant-speed applications. The test procedure is comprised of three segments: (1) A warm-up segment, (2) a transient segment, and (3) a steady-state segment. Each of these segments, described briefly in this section, include specifications for the speed and load of the engine as a function of time. Measured emissions during the transient and steady-state segments must meet the same emission standards that apply to all duty cycles. In general, the duty cycles are intended to represent operation from the wide variety of in-use applications. This includes highly transient low-speed forklift operation, constant-speed operation of portable equipment, and intermediate-speed vehicle operation.

Ambient temperatures in the laboratory must be between 20° and 30° C (68° and 86° F) during duty-cycle testing. This improves the repeatability of emission measurements when the engine runs through its prescribed operation. We nevertheless expect manufacturers to design for controlling emissions under broader ambient conditions, as described in Section V.D.5.

The warm-up segment begins with a cold-start. This means that the engine should be near room temperature before the test cycle begins. (Starting with an engine that is still warm from previous testing is allowed if good engineering judgment indicates that this will not affect emissions.) Once the engine is started, it operates over the first 3 minutes of the specified transient duty cycle without emission measurement. The engine then idles for 30 seconds before starting the prescribed transient cycle. The purpose of the warm-up segment is to bring the engine up to normal operating temperature in a standardized way. For severe-duty engines, the warm-up period is extended up to 15 minutes to account for the additional time needed to stabilize operating temperatures from air-cooled engines. The warm-up period allows enough time for engine-out emissions to stabilize, for the catalyst to warm up enough to become active, and for the engine to start closed-loop operation. This serves as a defined and achievable target for the design engineer to limit cold-start emissions to a relatively short period. In addition, we require manufacturers to activate emission-control systems as soon as possible after engine starting to make clear that it is not acceptable to design the emission-control system to start working only after the defined warm-up period is complete. In addition, we may measure emissions during the warm-up period to evaluate whether manufacturers are employing defeat devices. In contrast, transient testing of heavy-duty highway engines requires separate cold-start and hot-start measurements, with an 86-percent weighting assigned to the hot-start portion in calculating an engine's composite emission level. We believe this approach for nonroad engines serves to limit cold-start emissions without forcing manufacturers to focus design and testing resources on this portion of operation.

The transient segment of the general duty cycle is a composite of forklift and welder operation. This duty cycle was developed by selecting segments of measured engine operation from two forklifts and a welder as they performed their normal functions. This transient segment captures the wide variety of operation from a large majority of Large SI engines as fork-lifts and constant-speed engines represent about 90 percent of the Large SI market. Emissions measured during this segment are averaged over the entire transient segment to give a single value in g/kW.

Steady-state testing consists of engine operation for an extended period at several discrete speed-load combinations. Associated with these test points are weighting factors that allow a single weighted-average steady-state emission level in g/kW. While any steady-state duty cycle is limited in how much it can represent operation of engines that undergo transient operation, the distribution of the C2 modes and their weighting values aligns significantly with expected and measured engine operation from Large SI engines. In particular, these engines are generally not designed to operate for extended periods at high-load, rated speed conditions. Field measurement of engine operation shows, however, that forklifts operate extensively at lower speeds than those included in the C2 duty cycle. While we believe the test points of the C2 duty cycle are representative of engine operation from many applications of Large SI engines, supplementing the steady-state testing with a transient duty cycle is necessary to adequately include engine operation characteristic of what occurs in the field.

A separate transient duty cycle applies to engines that are certified for constant-speed applications only. These engines maintain a constant speed, but can experience widely varying loads. The transient duty cycle for these engines includes 20 minutes of engine operation based on the way engines work in a welder. Note that manufacturers selling engines for both constant-speed and variable-speed applications may omit the constant-speed transient test, since that type of operation is included in the general transient test.

A subset of constant-speed engines are designed to operate only at high

load. To address the operating limitations of these engines, we are adopting a modified steady-state duty cycle if the manufacturer provides clear evidence showing that engines rarely operate below 75 percent of full load at rated speed. Since most Large SI engines are clearly capable of operating for extended periods at light loads, we expect these provisions to apply to very few engines. This modified duty cycle consists of two equally weighted points, 75 percent and 100 percent of full load, at rated speed. Since the transient cycle described above involves extensive light-load operation, engines qualifying for this high-load duty cycle would not need to measure emissions over the transient cycle. Note that the field-testing emission standards still apply to engines that don't certify to transient duty-cycle standards.

Some diesel-derived engines operating on natural gas with power ratings up to 1,500 or 2,000 kW may be covered by these emission standards. Engine dynamometers with transient-control capabilities are generally limited to testing engines up to 500 or 600 kW. At this time emission standards and testing requirements related to transient duty cycles will not apply for engines rated above 560 kW. We will likely review this provision for Large SI engines once we have reached a conclusion on the same issue for nonroad diesel engines. For example, if we propose provisions for nonroad diesel engines that address testing issues for these very large engines, we would likely propose those same provisions for Large SI engines.

Test procedures related to evaporative emissions are described in Section V.C.4 above. In general, this involves measuring evaporative losses during a three-day period of cycling ambient temperatures between 72° and 96° F.

2. What Fuels Are Used During Emission Testing?

For gasoline-fueled Large SI engines, we are adopting the same specifications we have established for testing gasoline-fueled highway vehicles and engines. This includes the revised specification to cap sulfur levels at 80 ppm (65 FR 6698, February 10, 2000). These fuel specifications apply for both exhaust and evaporative emissions.

For LPG, we are adopting the same specifications established by California ARB. We understand that in-use fuel quality for LPG varies significantly in different parts of the country and at different times of the year. Not all in-use fuels outside California meet California ARB specifications for certification fuel, but fuels meeting the California specifications are nevertheless widely available. Test data show that LPG fuels with a much lower propane content have only slightly higher NO_X and CO emissions (see Chapter 4 of the Final Regulatory Support Document for additional information). These data support our belief that engines certified using the specified fuel will achieve the desired emission reduction for a wide range of in-use fuels. At certification manufacturers provide deterioration factors that take into account any effects related to the varying quality of commercially available fuels.

For natural gas, we are adopting specifications similar to those adopted by California ARB. As described in the Summary and Analysis of Comments, we have adjusted some of the detailed specifications from the proposal to reflect new data submitted after the proposal regarding ranges of fuel properties reflecting current commercial fuels.

Unlike California ARB, we apply the fuel specifications to testing only for emission measurements, not to service accumulation. Service accumulation between emission tests may involve certification fuel or any commercially available fuel of the appropriate type. We similarly allow manufacturers to choose between certification fuel and any commercial fuel for in-use measurements to show compliance with field-testing emission standards.

Since publishing the proposal, we learned about issues related to Large SI engines that operate around landfills or oil wells, where engines may burn naturally occurring gases that are otherwise emitted to the atmosphere. These gases generally consist of methane, but a wide range of other constituents may also be mixed in. As a result, engines may require adjustment over a wide range of settings for spark timing and air-fuel ratio to maintain consistent combustion. We generally believe that engine manufacturers should design their engines to operate with automatic feedback controls as much as possible to avoid the need for operators to manually adjust engines. However, in cases involving these noncommercial fuels, there is no way to improve the quality of the fuel to conform to any standardized specifications. Also, it is clearly preferred to capture and burn these gases than to emit them directly to the atmosphere, both to prevent greenhouse-gas emissions and to avoid wasting this source of fuel. To address this concern, we are adopting special provisions for engines burning noncommercial fuels if they are unable to meet emission standards over the full range of adjustability needed to accommodate the varying fuel properties. Manufacturers would show that these engines can meet emission standards using normal certification fuels, but the normal provisions related to adjustable parameters would not apply. To properly constrain this provision, we are including four requirements. First, manufacturers would need to add information on an engine label instructing operators how to make adjustments that would allow for maintained emission control and overall engine performance. Second, manufacturers would include additional label language to warn operators that the engine may be used only in applications involving noncommercial fuels. Third, manufacturers must separate these engines into a distinct engine family. Fourth, manufacturers must keep a record of individual sales of such engines.

3. Are There Production-Line Testing Provisions for Large SI Engines?

The provisions described in Section II.C.4 apply to Large SI engines. These requirements are consistent with those adopted by California ARB. One new issue specific to Large SI engines relates to the duty cycles for measuring emissions from production-line engines.

For routine production-line testing, we require emission measurements only with the steady-state duty cycles used for certification. Due to the cost of sampling equipment for transient engine operation, we do not require routine transient testing of production-line engines. Transient testing of production-line engines would add a substantial burden, since many manufacturers have limited emission-sampling capability at production facilities; also, these production facilities might be located at multiple sites. We believe that steady-state emission measurements will give a good indication of the manufacturers' ability to build engines consistent with the prototypes on which their certification data are based. We reserve the right, however, to direct a manufacturer to measure emissions with a transient duty cycle if we believe it is appropriate. One indication of the need for this transient testing would be if steady-state emission levels from production-line engines are significantly higher than the emission levels reported in the application for certification for that engine family. For manufacturers with the capability of measuring transient emission levels at the production line, we recommend doing transient tests to better ensure that in-use tests will not reveal problems in controlling emissions during transient

operation. Manufacturers need not make any measurements to show that production-line engines meet field-testing emission standards.

We expect manufacturers generally to certify their engines to the evaporative requirements using a design-based approach. Accordingly, the technologies we expect manufacturers to use for controlling evaporative emissions are not subject to variation as a result of production procedures, so we are not requiring production-line testing related to the evaporative requirements.

4. Are There In-Use Testing Provisions for Large SI Engines?

While the certification and production-line compliance requirements are important to ensure that engines are designed and produced in compliance with established emission limits, there is also a need to confirm that manufacturers build engines with sufficient durability to meet emission limits as they age in service. Consistent with the California ARB program, we are requiring engine manufacturers to conduct emission tests on a small number of field-aged engines to show they meet emission standards.

We may generally select up to 25 percent of a manufacturer's engine families in a given year to be subject to in-use testing. Most companies will need to test at most one engine family per year. Manufacturers may conduct in-use testing on any number of additional engine families at their discretion.

Manufacturers in unusual circumstances may develop an alternate plan to fulfill any in-use testing obligations, consistent with a similar program we have adopted for outboard and personal watercraft marine engines. These circumstances include total sales for an engine family below 200 per year, installation only in applications where testing is not possible without irreparable damage to the vehicle or engine, or any other unique feature that prevents full emission measurements.

While the regulations allow us to select an engine family every year from an engine manufacturer, there are several reasons why small-volume manufacturers may expect a less demanding approach. These manufacturers may have only one or two engine families. If a manufacturer shows that an engine family meets emission standards in an in-use testing exercise, that may provide adequate data to show compliance for that engine family for a number of years, provided that the manufacturer continues to produce those engines without significantly redesigning them in a way that might affect their in-use emissions performance and that we do not have other reason to suspect noncompliance. Also, where we have evidence that a manufacturer's engines are likely in good in-use compliance, we generally take the approach of selecting engine families based on some degree of proportionality. To the extent that manufacturers produce a smaller than average proportion of engines, they may expect us to select their engine families less frequently, especially if other available data pointed toward in-use compliance. In addition, our experience in implementing a comparable testing program for recreational marine engines provides a history of how we implement in-use testing requirements.

Engines can be tested one of two ways. First, manufacturers can remove engines from vehicles or equipment and test the engines on a laboratory dynamometer using certification procedures. For 2004 through 2006 model year engines, this is the same steady-state duty cycle used for certification; manufacturers may optionally test engines on the dynamometer under transient operating conditions. For 2007 and later model year engines, manufacturers must test engines using both steady-state and transient duty cycles, as in certification.

As an alternative, manufacturers may use the specified equipment and procedures for testing engines without removing them from the equipment (referred to in this document as field testing). See Section V.D.5 for a more detailed description of how to measure emissions from engines during normal operation in the field. Since engines operating in the field cannot be controlled to operate on a specific duty cycle, compliance is demonstrated by comparing the measured emission levels to the field-testing emission standards, which have higher numerical value to account for the possible effects of different engine operation. Because the engine operation can be so variable, however, engines tested to show compliance only with the field-testing emission standards are not eligible to participate in the in-use averaging, banking, and trading program (described below).

Clean Air Act section 213 requires engines to comply with emission standards throughout their regulatory useful lives, and section 207 requires a manufacturer to remedy in-use nonconformity when we determine that a substantial number of properly maintained and used engines fail to conform with the applicable emission standards (42 U.S.C. 7541). Along with the in-use testing program, we would allow manufacturers to demonstrate that they have designed their engines to control emissions substantially below the emission standards that apply. If manufacturers are able to show that they have already been reducing emissions more than required by the standards, including appropriate consideration for deterioration and compliance margins, this may allow us to conclude that these accumulated additional emission reductions are sufficient to offset the high emissions from a failing engine family. In concept, this approach serves much like a banking program to recognize manufacturers' efforts to go beyond the minimum required emission reductions.

This approach differs from the specific in-use emission-credit program that we proposed. This more general approach is preferred for two primary reasons. First, while we proposed to limit the in-use emission-credit program to transient testing in the laboratory, manufacturers will now be able to use emission data generated from field testing to characterize an engine family's average emission level. This becomes necessarily more subjective, but allows us to consider a wider range of information in evaluating the degree to which manufacturers are complying with emission standards across their product line. Second, this approach makes clearer the role of the emission credits in our consideration to recall failing engines. As we described in the proposal, we plan to consider average emission levels from multiple engine families in deciding whether to recall engines from a failing engine family. We therefore believe it is not appropriate to have a detailed emission-credit program defining precisely how and when to calculate, generate, and use credits that do not necessarily have value elsewhere.

The regulations do not specify how manufacturers would generate emission credits to offset a nonconforming engine family. This gives us the ability to consider any appropriate test data in deciding what action to take. In generating this kind of information, some general guidelines would apply. For example, we would expect manufacturers to share test data from all engines and all engine families tested under the in-use testing program, including nonstandard tests that might be used to screen engines for later measurement. This allows us to understand the manufacturers' overall level of performance in controlling emissions to meet emission standards. Average emission levels should be calculated over a running three-year period to include a broad range of

testing without skewing the results based on old designs. Emission values from engines certified to different tiers of emission standards or tested using different measurement procedures should not be combined to calculate a single average emission level. Average emission levels should be calculated according to the following equation, rounding the results to 0.1 g/kW-hr:

$$\text{Average EL} = \left[\sum_i (\text{STD} - \text{CL})_i \times (\text{UL})_i \times (\text{Sales})_i \times \text{Power}_i \times \text{LF}_i\right] \div \left[\sum_i (\text{UL})_i \times (\text{Sales})_i \times \text{Power}_i \times \text{LF}_i\right]$$

Where:

Average EL=Average emission level in g/kW-hr.

Sales_i=The number of eligible sales, tracked to the point of first retail sale in the U.S., for the given engine family during the model year.

$_i$(STD-CL)=The difference between the emission standard and the average emission level for an in-use testing family in g/kW-hr.

UL_i=Useful life in hours.

Power_i=The sales-weighted average rated brake power for an engine family in kW.

LF_i=Load factor or fraction of rated engine power utilized in use; use 0.50 for engine families used only in constant-speed applications and 0.32 for all other engine families.

The anticipated crankcase and evaporative emission-control technologies generally are best evaluated simply by checking whether or not they continue to function as designed, rather than implementing a program to measure these emissions from in-use engines. As a result, we may inspect in-use engines to verify that these systems continue to function properly throughout the useful life, but are not requiring manufacturers to include crankcase or evaporative measurements as part of the in-use testing program described in this section.

5. What Are the Field-Testing Emission Standards and Test Procedures?

To address concerns for controlling emissions outside of the certification duty cycles and to enable field-testing of Large SI engines, we are adopting procedures and standards that apply to a wider range of normal engine operation.

a. What is the field-testing concept? Measuring emissions from engines in the field as they undergo normal operation while installed in nonroad equipment addresses two broad concerns. First, testing of in-use engines has shown that emissions can vary dramatically under certain modes of operation.

Second, this provides a low-cost method of testing in-use engines, which facilitates in-use compliance programs. Field-testing addresses this by including emission measurements over the broad range of normal engine operation. This may include varying engine speeds and loads according to real operation and may include a reasonable range of ambient conditions, as described below.

No engine operating in the field can follow a prescribed duty cycle for a consistent measure of emission levels. Similarly, no single test procedure can cover all real-world applications, operations, or conditions. Specifying parameters for testing engines in the field and adopting an associated emission standard provides a framework for requiring that engines control emissions under the whole range of normal operation in the relevant nonroad equipment.

To ensure that emissions are controlled from Large SI engines over the full range of speed and load combinations seen in the field, we are adopting supplemental emission standards that apply more broadly than the duty-cycle standard, as detailed below. These standards apply to all regulated pollutants (NO_X, HC, and CO) under all normal operation (steady-state or transient). We exclude abnormal operation (such as very low average power and extended idling time), but do not restrict operation to any specific combination of speeds and loads. In addition, the field-testing standards apply under a broad range of in-use ambient conditions, both to ensure robust emission controls and to avoid overly restricting the times available for testing. These provisions are described in detail below.

b. How do the field-testing standards apply? Manufacturers have expressed an interest in using field-testing procedures before the 2007 model year to show that they can meet emission standards as part of the in-use testing program. While we are not adopting specific field-testing standards for 2004 through 2006 model year engines, we will allow this as an option. In this case, manufacturers would conduct the field testing as described here to show that their engines meet the 5.4 g/kW-hr HC+NO_X standard and the 50 g/kW-hr CO standard. This may give manufacturers the opportunity to do testing at significantly lower cost compared with laboratory testing. Preliminary certification data from California ARB show that manufacturers are reaching steady-state emission levels well below emission standards, so we expect any additional variability in field-testing measurements not to affect manufacturers' ability to meet the same emission standards.

The 2007 field-testing standards are based on emission data measured on engines with the same emission-control technology used to establish the duty-cycle standards. As described above for the duty-cycle standards, we are adopting a flexible approach to address the tradeoff between HC+NO_X and CO emissions. Table V.D–1 shows the range of values that define the standard for showing compliance for field-testing measurements. The higher numerical values of the Tier 2 standards for field testing (compared with duty-cycle testing) reflect the observed variation in emissions for varying engine operation, and the projected effects of ambient conditions on the projected technology. Conceptually, we believe that field-testing standards should primarily require manufacturers to adjust engine calibrations to effectively manage air-fuel ratios under varying conditions. The estimated cost of complying with emission standards includes an allowance for the time and resources needed for this recalibration effort (see Section IX.B. for total estimated costs per engine).

TABLE V.D–1.—SAMPLES OF POSSIBLE ALTERNATIVE FIELD-TESTING EMISSION STANDARDS FOR LARGE SI ENGINES(G/KW-HR) *

HC+NO_X	CO
3.8	6.5
3.1	8.5
2.4	11.7
1.8	16.8
1.4	23.1

TABLE V.D–1.—SAMPLES OF POSSIBLE ALTERNATIVE FIELD-TESTING EMISSION STANDARDS FOR LARGE SI ENGINES(G/KW-HR) *—Continued

$HC+NO_X$	CO
1.1	31

*As described in the Final Regulatory Support Document and the regulations, the values in the table are related by the following formula: $(HC+NO_X) \times CO0.791 = 16.78$. These values follow directly from the logarithmic relationship presented with the proposal in the Draft Regulatory Impact Analysis.

We generally require manufacturers to show at certification that they are capable of meeting all standards that apply for the useful life. This adds a measure of assurance to both EPA and manufacturers that the engine design is sufficient for any in-use engines to pass any later testing. For Large SI engines, manufacturers must show in their application for certification that they are able to meet the field-testing standards. Manufacturers must submit a statement that their engines will comply with field-testing emission standards under all conditions that may reasonably be expected to occur in normal vehicle operation and use. Manufacturer will provide a detailed description of any testing, engineering analysis, and other information that forms the basis for the statement. This will likely include a variety of steady-state emission measurements not included in the prescribed duty cycle. It may also include a continuous trace showing how emissions vary during the transient test or it may include emission measurements during other segments of operation manufacturers believe are representative of the way their engines normally operate in the field.

Two additional provisions are necessary to allow emission testing without removing engines from equipment in the field. Manufacturers must design their engines to broadcast instantaneous speed and torque values to the onboard computer and ensure that emission sampling is possible after engine installation.

The test equipment and procedures for showing compliance with field-testing standards also hold promise to reduce the cost of production-line testing. Companies with production facilities that have a dynamometer but no emission measurement capability may use the field-testing equipment and procedures to get a low-cost, valid emission measurement at the production line. Manufacturers may also choose to use the cost advantage of the simpler measurement to sample a greater number of production-line engines. This would provide greater assurance of consistent emissions performance, but would also provide valuable quality-control data for overall engine performance. See the discussion of alternate approaches to production-line testing in Section II.C.4 for more information.

c. What limits are placed on field testing? The field-testing standards apply to all normal operation. This may include steady-state or transient engine operation. Given a set of field-testing standards, the goal for the design engineer is to ensure that engines are properly calibrated for controlling emissions under any reasonably expected mode of engine operation. Engines may not be able to meet the emissions limit under all conditions, however, so we are adopting several parameters to narrow the range of engine operation that is subject to the field-testing standards. For example, emission sampling for field testing does not include engine starting.

Engines can often operate at extreme environmental and geographic conditions (temperature, altitude, etc.). To narrow the range of conditions for the design engineer, we are limiting emission measurements during field testing to ambient temperatures from 13° to 35° C (55° to 95° F), and to ambient pressures from 600 to 775 millimeters of mercury (which should cover almost all normal pressures from sea level to 7,000 feet above sea level). This allows testing under a wider range of conditions in addition to helping ensure that engines are able to control emissions under the whole range of conditions under which they operate.

Some additional limits to define ''normal'' operation apply to field testing. These restrictions are intended to provide manufacturers with some certainty about what their design targets are and to ensure that compliance with the field-testing standards is feasible. These restrictions apply to both variable-speed and constant-speed engine applications.

First, measurements with more than 2 minutes of continuous idle are excluded. This means that an emission measurement from a forklift while it idled for 5 minutes will not be considered valid. On the other hand, an emission measurement from a forklift that idled for multiple 1-minute periods and otherwise operated at 40-percent power for several minutes would be considered a valid measurement. Measurements with in-use equipment in their normal service show that idle periods for Large SI engines are short, but relatively frequent. We therefore do not automatically exclude an emission sample if it includes an idling portion. At the same time, controlling emissions during extended idling poses a difficult design challenge, especially at low ambient temperatures. Exhaust and catalyst temperatures under these conditions can decrease enough that catalyst conversion is significantly less effective. Since extended idling is not an appropriate focus of extensive development efforts at this stage, we believe the 2-minute threshold for continuous idle appropriately balances the need to include measurement during short idling periods with the technical challenges of controlling emissions under difficult conditions.

Second, measured power during the sampling period must be above 5 percent of maximum power for an emission measurement to be considered valid. Brake-specific emissions (g/kW-hr) can be very high at low power because they are calculated by dividing the g/hr emission rate by a very small power level (kW). By ensuring that brake-specific emissions are not calculated by dividing by power levels less than 5 percent of the maximum, we can avoid this problem. The data presented in Chapter 4 of the Final Regulator Support Document show that engines can meet the emission standards when operating above 5 percent of rated power.

Third, some engines need to run rich of stoichiometric combustion during extended high-load operation to protect against engine failure. This increases HC and CO emissions. We are adopting provisions allowing manufacturers to meet separate standards for these engines for steady-state operation. For engines qualifying for these different steady-state standards, we specify that a valid sample for field testing must include less than 10 percent of operation at 90 percent or more of maximum power. We expect it to be uncommon for engine installations to call for such high power demand due to the shortened engine lifetime at very high-load operation. A larger engine can generally produce the desired power at a lower relative load, without compromising engine lifetime. Alternatively, applications that call for full-load operation typically use diesel engines. Manufacturers may request a different threshold to allow more open-loop operation. Before we approve such a request, the engine manufacturer would need to have a plan for ensuring that the engines in their final installation do not routinely operate at loads above the specified threshold.

An additional parameter to consider is the minimum sampling time for field testing. A longer period allows for

greater accuracy, due mainly to the smoothing effect of measuring over several transient events. On the other hand, an overly long sampling period can mask areas of engine operation with poor emission-control characteristics. To balance these concerns, we are applying a minimum sampling period of 2 minutes. In other rules for diesel engines, we have allowed sampling periods as short as 30 seconds. Spark-ignition engines generally don't have turbochargers and they control emissions by maintaining air-fuel ratio with closed-loop controls through changing engine operation. Spark-ignition engines are therefore much less prone to consistent emission spikes from off-cycle or unusual engine operation. We believe the 2-minute sampling time requirement will ensure sufficient measurement accuracy and will allow for more meaningful measurements from engines that may be operated with very frequent but brief times at idle.

We do not specify a maximum sampling time. We expect manufacturers testing in-use engines to select an approximate sampling time before measuring emissions; however, the standards apply for any sampling time that meets the minimum. When selecting an engine family for the in-use testing program, we will develop a plan with direction related to the way manufacturers conduct the emission-sampling effort, such as sampling time or specific types of engine operation, to ensure that testing provides relevant data.

d. How do I test engines in the field? To test engines without removing them from equipment, analyzers are connected to the engine's exhaust to detect emission concentrations during normal operation. Exhaust volumetric flow rate and continuous power output are also needed to convert the analyzer responses to units of g/kW-hr for comparing to emission standards. These values can be calculated from measurements of the engine intake flow rate, the exhaust air-fuel ratio and the engine speed, and from torque information.

Available small analyzers and other equipment may be adapted for measuring emissions from field equipment. A portable flame ionization detector can measure total hydrocarbon concentrations. Methane measurement currently requires more expensive laboratory equipment that is impractical for field measurements. Field-testing standards are therefore be based on total hydrocarbon emissions. A portable analyzer based on zirconia technology measures NO_X emissions. A nondispersive infrared (NDIR) unit can measure CO. Emission samples can best be drawn from the exhaust flow directly downstream of the catalyst material to avoid diluting effects from the end of the tailpipe. Installing a sufficiently long tailpipe extension is also an acceptable way to avoid dilution. Mass flow rates also factor into the torque calculation; this may either be measured in the intake manifold or downstream of the catalyst.

Calculating brake-specific emissions depends on determining instantaneous engine speed and torque levels. Manufacturers must therefore design their engines to continuously monitor engine speed and torque. The tolerance for speed measurements, which is relatively straightforward, is ±5 percent. For torque, the onboard computer needs to convert measured engine parameters into useful units. Manufacturers generally will need to monitor a surrogate value such as intake manifold pressure or throttle position (or both), then rely on a look-up table programmed into the onboard computer to convert these torque indicators into newton-meters. Manufacturers may also want to program the look-up tables for torque conversion into a remote scan tool. Because of the greater uncertainty in these measurements and calculations, manufacturers must produce their systems to report torque values that are within 85 and 105 percent of the true value. This broader range allows appropriately for the uncertainty in the measurement, while providing an incentive for manufacturers to make the torque reading as accurate as possible. Under-reporting torque values would over-predict emissions. These tolerances are taken into account in the selection of the field-testing standards, as described in Chapter 4 of the Final Regulatory Support Document.

E. Special Compliance Provisions

We are adopting hardship provisions to address the particular concerns of small-volume manufacturers, which generally have limited capital and engineering resources. These hardship provisions are generally described in Section VII.C. For Large SI engines, we are adopting a longer available extension of the deadline, up to four years, for meeting emission standards for companies that qualify for special treatment under the hardship provisions. We will, however, not extend the deadline for compliance beyond the four-year period. This approach considers the fact that, unlike most other engine categories, qualifying small businesses are more likely to be manufacturers designing their own products. Other types of engines more often involve importers, which are limited more by available engine suppliers than design or development schedules.

We are not finalizing the proposed interim emission standards proposed for small-volume manufacturers. We believe we can accomplish the same objectives with more flexibility, and potentially with greater net emission reductions, by relying on the hardship provisions.

In addition, we are waiving the requirement for small-volume manufacturers to broadcast engine speed and torque values. These companies may choose to do this to enable field-testing of their products, but may be constrained in developing this capability to the extent that they rely on component suppliers to provide systems that meet EPA requirements.

F. Technological Feasibility of the Standards

We are adopting emission standards that depend on the industrial versions of established automotive technologies. The most recent advances in automotive technology have made possible even more dramatic emission reductions. However, we believe that transferring some of these most advanced technologies is not appropriate for nonroad engines at this time, especially considering the much smaller sales volumes for amortizing fixed costs and the additional costs associated with the first-time regulation of these engines.

To comply with the 2004 model year standards, manufacturers should not need to do any development, testing, or certification work that is not already necessary to meet California ARB standards in 2004. As shown in Chapter 4 of the Final Regulatory Support Document, manufacturers can meet these standards with three-way catalysts and closed-loop fuel systems. These technologies have been available for industrial engine applications for several years. Moreover, several manufacturers have already completed the testing effort to certify with California ARB that their engines meet these standards. Complying with emission standards nationwide in 2004 will therefore generally require manufacturers only to produce greater numbers of the engines complying with the California standards.

Chapter 4 of the Final Regulatory Support Document further describes data and rationale showing why we believe that the 2007 model year emission standards under the steady-state and transient duty-cycles and field-testing procedures are feasible. In

summary, testing from Southwest Research Institute and other data show that the same catalyst and fuel-system technologies needed to meet the 2004 standards can be optimized to meet more stringent emission standards. Applying further development allows the design engineer to fine-tune control of air-fuel ratios and address any high-emission modes of operation to produce engines that consistently control emissions to very low levels, even considering the wide range of operation experienced by these engines. The numerical emission standards are based on measured emission levels from engines that have operated for at least 5,000 hours with a functioning emission-control system. These engines demonstrate the achievable level of control from catalyst-based systems and provide a significant degree of basic development that should help manufacturers in optimizing their own engines.

We believe it is appropriate to initiate the second stage of standards in 2007, because we believe that applying these emission standards earlier does not allow manufacturers enough stability between introduction of different phases of emission standards to prepare for complying with the full set of requirements in this final rule and to amortize their fixed costs. Three years of stable emission standards, plus the remaining lead time before 2004, allows manufacturers enough time to go through the development and certification effort to comply with the new standards including new test cycle requirements. The provisions to allow ''family banking'' for early compliance provide an additional tool for companies that choose to spread out their design and certification efforts.

The new emission standards will either have no impact or a positive impact with respect to noise, energy, and safety, as described in Chapter 4 of the Final Regulatory Support Document. In particular, the anticipated fuel savings associated with the expected emission-control technologies will provide a very big energy benefit related to new emission standards. The projected technologies are currently available and are consistent with those anticipated for complying with the emission standards adopted by California ARB. The lead time for the near-term and long-term emission standards allows manufacturers enough time to optimize these designs to most effectively reduce emissions from the wide range of Large SI equipment applications.

VI. Recreational Marine Diesel Engines

This section describes the new provisions for 40 CFR part 94, which apply to engine manufacturers and importers. We are applying the same general compliance provisions from 40 CFR part 94 for engine manufacturers, equipment manufacturers, operators, rebuilders, and others. See Section II for a description of our general approach to regulating nonroad engines and how manufacturers show that they meet emission standards.

A. Overview

We are adopting exhaust and crankcase emission standards for recreational marine diesel engines with power ratings greater than or equal to 37 kW. We are adopting emission standards for HC, NO_X, CO, and PM beginning in 2006. We believe manufacturers will be able to use technology developed for land-based nonroad and commercial marine diesel engines. To encourage the introduction of low-emission technology, we are also adopting voluntary ''Blue Sky'' standards which are 40 percent lower than the mandatory standards. We also recognize that there are many small businesses that manufacture recreational marine diesel engines. We are therefore including several regulatory options for small businesses that will help minimize any unique burdens caused by emission regulations.

Diesel engines are primarily available in inboard marine configurations, but may also be available in sterndrive and outboard marine configurations. Inboard diesel engines are the primary choice for many larger recreational boats.

B. Engines Covered by This Rule

The standards in this section apply to recreational marine diesel engines. We excluded these engines from the requirements applying to commercial marine diesel engines because at the time we thought their operation in planing mode might impose design requirements on recreational boat builders and to allow us more time for further evaluation prior to setting standards (64 FR 73300, December 29, 1999). Commercial marine vessels tend to be displacement-hull vessels, designed and built for a unique commercial application (such as towing, fishing, or general cargo). Power ratings for engines used on these vessels are analogous to land-based applications, and these engines generally have warranties for 2,000 to 5,000 hours of use. Recreational vessels, on the other hand, tend to be planing vessels. Engines used on these vessels are designed to achieve higher power output with less engine weight. This increase in power reduces the lifetime of the engine, so recreational marine engines have shorter warranties than their commercial counterparts. In our previous rulemaking, recreational engine industry representatives raised concerns about the ability of these engines to meet the commercial standards without substantial changes in the size and weight of the engine. Such changes may have an impact on vessel builders, who might have to redesign vessel hulls to accommodate the new engines. Because most recreational vessel hulls are made with fiberglass molds, this may be a significant burden for recreational vessel builders.

Our further evaluation of these issues leads us to conclude that recreational marine diesel engines can achieve those same emission standards without significant impacts on engine size and weight, and therefore without significant impacts on vessel design. Section VI.G of this document, Chapters 3 and 4 of the Final Regulatory Support Document, and Section II.A of the Summary and Analysis of Comments describe the several technological changes we anticipate manufacturers will use to comply with the new emission standards. None of these technologies has an inherent negative effect on the performance or power density of an engine. As with engines in land-based applications, we expect that manufacturers will be able to use the range of technologies available to maintain or even improve the performance capabilities of their engines. We are establishing a separate regulatory program for recreational marine diesel engines in this rule, with most aspects the same as for commercial marine diesel engines but with certain aspects of the program tailored to these applications, notably the not-to-exceed emissions requirements.

To distinguish between commercial and recreational marine diesel engines for the purpose of emission controls, it is necessary to define ''recreational marine diesel engine.'' The commercial marine diesel engine rule defined recreational marine engine as a propulsion marine engine that is intended by the manufacturer to be installed on a recreational vessel. The engine must be labeled to distinguish it from a commercial marine diesel engine. The label must read: ''THIS ENGINE IS CATEGORIZED AS A RECREATIONAL ENGINE UNDER 40 CFR PART 94. INSTALLATION OF THIS ENGINE IN ANY NONRECREATIONAL VESSEL IS A

VIOLATION OF FEDERAL LAW SUBJECT TO PENALTY.''

We are revising this definition to include a requirement that a recreational marine engine must be a Category 1 marine engine (have a displacement of less than 5 liters per cylinder). Category 2 marine engines are generally designed with characteristics similar to commercial marine engines. Vessels using engines of this size generally require engines that can operate longer at higher power than typical recreational boats; therefore, these engines generally have a lower power density and are not offered in a ''recreational'' rating.

For the purpose of the recreational marine diesel engine definition included in the proposal, recreational vessel was defined as ''a vessel that is intended by the vessel manufacturer to be operated primarily for pleasure or leased, rented, or chartered to another for the latter's pleasure.'' Because certain vessels that are used for pleasure may have operating characteristics that are more similar to commercial marine vessels (such as excursion vessels and charter craft), we drew on the Coast Guard's definition of a ''small passenger vessel'' (46 U.S.C. 2101 (35)) to further delineate what would be considered to be a recreational vessel. Specifically, the term ''operated primarily for pleasure or leased, rented or chartered to another for the latter's pleasure'' does not include the following vessels: (1) Vessels of less than 100 gross tons that carry more than 6 passengers; (2) vessels of 100 gross tons or more that carry one or more passengers; or (3) vessels used solely for competition. For the purposes of this definition, a passenger is defined by 46 U.S.C 2101 (21, 21a) which generally means an individual who pays to be on the vessel.

We received several comments in this rulemaking on these definitions. Engine manufacturers were concerned that the definitions may be unworkable for engine manufacturers, because they cannot know whether a particular recreational vessel might carry more than six passengers at a time. All they can know is whether the engine they manufacture is intended by them for installation on a vessel designed for pleasure and having the corresponding characteristics for planing, power density, and performance requirements.

We are not revising our existing definition of recreational marine vessel. As discussed in the Summary and Analysis of Comments, a vessel will be considered recreational if the boat builder intends that the customer will operate it consistent with the recreational-vessel definition. Relying on the boat builder's intent is necessary because manufacturers need to establish a vessel's classification before it is sold, whereas the Coast Guard definitions apply at the time of use. The definition therefore relies on the intent of the boat builder to establish that the vessel will be used consistent with the above criteria. If a boat builder manufactures a vessel for a customer who intends to use the vessel for recreational purposes, we would always consider that a recreational vessel, regardless of how the owner (or a subsequent owner) actually uses it. The engine manufacturer will not be expected to ensure that their engines are used only in recreational craft; however, they would be required to label their recreational engines as described above. The vessel builders will then be required to install properly certified recreational (or commercial) marine engines in recreational vessels and certified commercial marine engines in commercial vessels.

C. Emission Standards for Recreational Marine Diesel Engines

This section describes the new emission standards and implementation dates, with an outline of the technology that can be used to achieve these levels. The technological feasibility discussion below (Section VI.G) describes our technical rationale in more detail.

1. What Are the Emission Standards and Compliance Dates?

The emission standards for recreational marine diesel engines are the same as the Tier 2 standards for commercial marine diesel engines with two years additional lead time. We are setting the standards at the same level because recreational marine diesel engines can use all the technologies projected for Tier 2 and these technologies are expected to lead to compliance. As with commercial marine engines this technology will be available in the lead time provided to allow compliance with the emission standards. Many of these engines already use this technology. This includes electronic fuel management, turbocharging, and separate-circuit aftercooling. In fact, because recreational engines have much shorter design lives than commercial engines, it is easier to apply raw-water aftercooling to these engines, which allows manufacturers to enhance performance while reducing NO_X emissions.

Engine manufacturers will generally increase the fueling rate in recreational engines, compared to commercial engines, to gain power from a given engine size. This helps bring a planing vessel onto the water surface and increases the maximum vessel speed without increasing the weight of the vessel. This difference in how recreational engines are designed and used affects emissions. However, the technology listed above can be used to meet the emission standards while still meeting the performance requirements of a recreational engine.

We are adopting the commercial marine engine standards for recreational marine diesel engines, allowing two years beyond the dates that standards apply for the commercial engines. This gives engine manufacturers additional lead time in adapting technology to their recreational marine diesel engines. For manufacturers producing only recreational marine engines the implementation dates provide three to six years of lead time beyond this notice. Based on our evaluation of the industry, we believe that manufacturers who produce only recreational marine engines would likely be small businesses and would have the option of additional lead time, and other flexibility, as discussed in Section VI.E. The emission standards and implementation dates for recreational marine diesel engines are presented in Table VI.C–1. The subcategories refer to engine displacement in liters per cylinder.

TABLE VI.C–1.—RECREATIONAL MARINE DIESEL EMISSION STANDARDS AND IMPLEMENTATION DATES

Subcategory	$HC+NO_X$ g/kW-hr	PM g/kW-hr	CO g/kW-hr	Implementation date
power ≥ 37 kW disp < 0.9	7.5	0.40	5.0	2007
0.9 ≤ disp < 1.2	7.2	0.30	5.0	2006
1.2 ≤ disp < 2.5	7.2	0.20	5.0	2006
disp ≥ 2.5	7.2	0.20	5.0	2009

Manufacturers commented that engines with less than 2.5 liters per cylinder, but more than 560 kW would have no lead time beyond the land-based nonroad diesel engine standards and that some commercial marine engines in this category would actually have to certify two years before nonroad engines. In this case this is caused by the way we define subclasses, but has technology and cost implications for the engines involved. To address this, we are providing an optional implementation date of 2008 for certain commercial and recreational marine engines (see the Summary and Analysis of Comments for more detail). To be eligible for this option, the engine must be derived from a land-based nonroad engine with a rated power greater than 560 kW and have a displacement of 2.0 to 2.5 liters per cylinder. To use this option, we are requiring that engines certified under this option meet an $HC+NO_X$ standard of 6.4 g/kW-hr through model year 2012. We believe this emission level, which matches the Tier 2 level for land-based nonroad engines, should be achievable given the extra lead time for development. Testing would still be performed on the appropriate marine duty cycles. Based on our analysis in the Final Regulatory Impact Analysis for commercial marine engines, $HC+NO_X$ emissions measured over the marine duty cycles should be similar to those measured over the land-based nonroad duty cycle.

We are also adopting not-to-exceed emission standards and related requirements similar to those finalized for commercial marine diesel engines. This is discussed below in Section VI.C.8.

2. Will I Be Able To Average, Bank, or Trade Emissions Credits?

Manufacturers may use emission credits from recreational marine diesel engines to show that they meet emission standards. Section II.C.3 gives an overview of the emission-credit program, which is consistent with what we have adopted for Category 1 commercial marine diesel engines. The emission-credit program covers $HC+NO_X$ and PM emissions, but not CO emissions.

Consistent with our land-based nonroad and commercial marine diesel engine regulations, manufacturers may not simultaneously generate $HC+NO_X$ credits while using PM credits on the same engine family, and vice versa. This is necessary because of the inherent trade-off between NO_X and PM emissions in diesel engines.

We are adopting the same maximum value of the Family Emission Limit (FEL) as for commercial marine diesel engines. For engines with a displacement of less than 1.2 liters/cylinder, the maximum values are 11.5 g/kW-hr $HC+NO_X$ and 1.2 g/kW-hr PM; for larger engines, the maximum values are 10.5 g/kW-hr $HC+NO_X$ and 0.54 g/kW-hr PM. These maximum FEL values were based on the comparable land-based emission-credit program and will ensure that the emissions from any given family certified under this program not be significantly higher than the applicable emission standards. We believe these maximum values will prevent backsliding of emissions above the baseline levels for any given engine model. Also, we are concerned that the higher emitting engines may cause increased emissions in areas such as ports that may have a need for PM or NO_X emission reductions. Nonetheless, it is acknowledged that recreational marine diesel engines constitute a small fraction of PM and HC + NO_X emissions in nonattainment areas.

Emission credits generated under this program have no expiration, with no discounting applied. This is consistent with the commercial marine credit program and gives manufacturers more options in implementing their engine designs. However, if we revisit these standards later, we will have to reevaluate this issue in the context of whether future advances in technology would result in a large amount of accumulated credits that would adversely impact the timely implementation of any new requirements.

Consistent with the land-based nonroad diesel rule, we will also not allow manufacturers to use credits generated on land-based engines for demonstrating compliance with marine diesel engines. In addition, credits may not be exchanged between recreational and commercial marine engines. The emission standards for recreational engines are based on the baseline levels of current recreational marine engines and the capability of technology to reduce emissions from recreational marine engines. The standard is, therefore, premised on the capability and use of recreational marine technology and not on the capability and use of technology on other engines. Emissions from land-based, commercial, and recreational marine engines are measured over different duty cycles and have different useful lives. Correction factors would be difficult to generate and they would add complexity and uncertainty to the value of the credits. Furthermore, we are concerned that allowing cross program trading could create an inequity between manufacturers with diverse product lines and those with more limited offerings, thereby potentially creating a competitive advantage for diverse companies over small companies selling only recreational marine engines. If a manufacturer were to do this, we do not believe it is likely that they would sell emission credits at a price that would be economical for small manufacturers.

We will allow early banking of emission credits relative to the standard. Early banking of emission credits may allow for a smoother implementation of the recreational marine standards. These credits are generated relative to the new emission standards and are undiscounted.

We will also allow manufacturers to generate early credits relative to their pre-control emission levels. If manufacturers choose this option they will have to develop baseline emission levels specific to each participating engine family. Credits will then be calculated relative to the manufacturer-generated baseline emission rates, rather than the standards. To generate the baseline emission rates, a manufacturer must test three engines from the family for which the baseline is being generated. The baseline will be the average emissions of the three engines. Under this option, engines must still certify to the standards to generate credits, but the credits will be calculated relative to the generated baseline rather than the standards. Any credits generated between the level of the standards and the generated baseline will be discounted 10 percent. This is to account for the variability of testing in-use engines to establish the family-specific baseline levels, which may result from differences in hours of use and maintenance practices as well as other sources of potential uncertainty about the representativeness if the baseline. Manufacturers commented that credits should not be generated under the early banking program for the portion of NO_X reductions above the MARPOL Annex VI standard. We believe this approach is reasonable since this should be a common upper limit for all engines. Therefore, if manufacturers use this option, any baseline NO_X levels determined to be above the MARPOL Annex VI standard must be adjusted to that level for determining early credits.

3. Is EPA Proposing Voluntary Standards for These Engines?

a. Blue Sky. We are adopting voluntary emission standards based on a 45-percent reduction beyond the mandatory standards. An engine family meeting the voluntary standards

qualifies for designation as Blue Sky Series engines. These voluntary standards are the same as those adopted for commercial marine diesel engines (see Table VI.C–2). While the Blue Sky Series emission standards are voluntary, a manufacturer choosing to certify an engine under this program must comply with all the requirements that apply to this category of engines, including allowable maintenance, warranty, useful life, rebuild, and deterioration factor provisions. This program is effective immediately when we publish this rule. To maximize the potential for other groups to create incentive programs, without double-counting, we do not allow manufacturers to earn marketable credits for their Blue Sky Engines.

TABLE VI.C–2.—BLUE SKY VOLUNTARY EMISSION STANDARDS FOR RECREATIONAL MARINE DIESEL ENGINES

[g/kW-hr]

Rated brake power (kW)	$HC+NO_X$	PM
power ≥ 37 kW		
displ.<0.9	4.0	0.24
0.9≤displ.<1.2	4.0	0.18
1.2≤displ.<2.5	4.0	0.12
2.5≤displ.	5.0	0.12

b. MARPOL Annex VI. The MARPOL Annex VI standards are for NO_X emissions from marine diesel engines rated above 130 kW. We encourage engine manufacturers to make Annex VI-compliant engines available and boat builders to purchase and install them before we apply the EPA Tier 2 standards. If the treaty enters into force, the standards would go into effect retroactively to all boats built January 1, 2000 or later. One advantage of using MARPOL-compliant engines is that if this happens, users will be in compliance with the standard without having to make any changes to their engines.

4. What Durability Provisions Apply?

Several provisions help ensure that engines control emissions throughout a lifetime of operation. Section II.C gives a general overview of durability provisions associated with emissions certification. This section discusses these provisions specifically for recreational marine diesel engines.

a. How long do my engines have to comply? Manufacturers must produce engines that comply over a useful life of ten years or until the engine accumulates 1,000 operating hours, whichever occurs first. The hours requirement is a minimum value for useful life, and manufacturers must comply for a longer period in those cases where they design their engines to be operated longer than 1,000 hours. In making the determination that engines are designed to last longer than the 1,000 hour value, we will consider evidence such as whether the engines continue to reliably deliver the necessary power output without an increase in fuel consumption that the user would find unacceptable and thus might trigger a maintenance or rebuild action by the user.

b. How do I demonstrate emission durability? We are extending the durability demonstration requirements for commercial marine diesel engines to also cover recreational marine diesel engines. This means that recreational marine engine manufacturers, using good engineering judgment, will generally need to test one or more engines for emissions before and after accumulating the number of hours consistent with the engine useful life (usually performed by continuous engine operation in a laboratory). The results of these tests are referred to as ''durability data,'' and are used to determine the rates at which emissions are expected to increase over the useful life of the engine for each engine family The rates are known as deterioration factors. However, in many cases, manufacturers may use durability data from a different engine family, or for the same engine family in a different model year. Because of this allowance to use the same data for multiple engine families, we expect durability testing to be very limited.

We also specify that manufacturers must collect durability data and generate deterioration factors using the same methods established for commercial marine diesel engines. These requirements are in 40 CFR 94.211, 94.218, 94.219, and 94.220. These sections describe when durability data from one engine family can be used for another family, how to select to the engine configuration that is to be tested, how to conduct the service accumulation, and what maintenance can be performed on the engine during this service accumulation. Under 40 CFR 94.220, manufacturers may project deterioration rates from engines with an accumulation of less than 1,000 hours, as long as the amount of service accumulation completed and projection procedures are determined using good engineering judgment.

c. What maintenance may be done during service accumulation? For engines certified to a 1,000-hour useful life, the only maintenance that may be done must be: (1) Regularly scheduled, (2) unrelated to emissions, and (3) technologically necessary. This typically includes changing engine oil, oil filter, fuel filter, and air filter. For recreational marine diesel engines certified to longer lives, these engines will be subject to the same minimum allowable maintenance intervals as commercial marine engines. These intervals and the allowable maintenance are specified in 40 CFR 94.211.

d. Are there production-line testing provisions? We are adopting the production-line testing requirements from commercial marine engines for recreational marine diesel engines, with the additional provisions described in II.C.4. A manufacturer must test one percent of its total projected annual sales of Category 1 engines each year to meet production-line testing requirements. We are not adopting a minimum number of tests, so a manufacturer who produces no more than 100 marine diesel engines is not required to do any production-line testing. Similar to the commercial marine requirements, manufacturers have the option of using alternative production-line testing programs with EPA approval.

Manufacturers commented that we should limit the number of engines tested for a given engine family to five, arguing that five engines would be sufficient to demonstrate compliance with the standards. Although there isn't necessarily an engineering rationale for capping the number of tests for each engine family to five, we believe that statistical certainty can be determined using the Cumulative Sum method described for recreational vehicles in 40 CFR part 1051, subpart D. Therefore, we are providing the option of using the Cumulative Sum method for determining sample sizes under the production-line testing program. For marine engines, PM would need to be included in this methodology. Under the Cumulative Sum method, a statistical analysis is applied to test results to establish the number of tests needed. This may limit the number of engines tested to less than 1 percent of the production volume in cases where there is low variability in the test data.

5. Do These Standards Apply to Alternative-Fueled Engines?

These new standards apply to all recreational marine diesel engines, without regard to the type of fuel used. While we are not aware of any alternative-fueled recreational marine diesel engines currently being sold into the U.S. market, alternate forms of the hydrocarbon standards address the potential for natural gas-fueled and

alcohol-fueled engines. In our regulation of highway vehicles and engines, we determined that nonmethane standards should be used in place of total hydrocarbon standards for engines fueled with natural gas (which is comprised primarily of methane) (59 FR 48472, September 21, 1994). These alternate forms follow the precedent set in previous rulemakings to make the standards similar in stringency and environmental impact.

Similarly, we are applying HC-equivalent (HCE) standards instead of total hydrocarbon standards to alcohol-fueled highway engines and vehicles (54 FR 14426, April 11, 1989). HC-equivalent emissions are calculated from the oxygenated organic components and non-oxygenated organic components of the exhaust, summed together based on the amount of organic carbon present in the exhaust. Alcohol-fueled recreational marine engines must therefore comply with total hydrocarbon equivalent (THCE) plus NO_X standards instead of THC plus NO_X standards.

6. Is EPA Controlling Crankcase Emissions?

Manufacturers must prevent crankcase emissions from recreational marine diesel engines, with one exception. Turbocharged recreational marine diesel engines may be built with open crankcases, as long as the crankcase ventilation system allows for measurement of crankcase emissions. For these engines with open crankcases, we will require crankcase emissions to be either routed into the exhaust stream to be included in the exhaust measurement, or to be measured separately and added to the measured exhaust mass. These measurement requirements do not add significantly to the cost of testing, especially where the crankcase vent is simply routed into the exhaust stream prior to the point of exhaust sampling. These provisions are consistent with our previous regulation of crankcase emissions from such diverse sources as commercial marine engines, locomotives, and passenger cars.

7. What Are the Smoke Requirements?

We are not adopting smoke requirements for recreational marine diesel engines. Marine diesel engine manufacturers have stated that many of their engines, though currently unregulated, are manufactured with smoke limiting controls at the request of customers. Users seek low smoke emissions both because they dislike the exhaust residue on decks and because they can be subject to penalties in ports with smoke emission requirements. In many cases, marine engine exhaust gases are mixed with water prior to being released. This practice reduces smoke visibility. Moreover, we believe that applying PM standards will have the effect of limiting smoke emissions as well.

8. What Are the Not-To-Exceed Standards and Related Requirements?

a. Concept. Our goal is to achieve control of emissions over the broad range of in-use speed and load combinations that can occur on a recreational marine diesel engine so that real-world emission control is achieved, rather than just controlling emissions under certain laboratory conditions. An important tool for achieving this goal is an in-use program with an objective emission standard and an easily implemented test procedure. Prior to this concept, our approach has been to set a numerical standard on a specified test procedure and rely on the additional prohibition of defeat devices to ensure in-use control over a broad range of operation not included in the test procedure.

We are applying the defeat device provisions established for commercial marine engines to recreational marine diesel engines in addition to the NTE requirements (see 40 CFR 94.2). A design in which an engine met the standard at the steady-state test points but was intentionally designed to approach the NTE limit everywhere else would be considered to be defeating the standard. Electronic controls that recognize and modulate the emission-control system when the engine is not being tested for emissions and increases the emissions from the engine would be an example of a defeat device, regardless of the emissions performance of the engine with regard to the standards.

No single test procedure can cover all real-world applications, operations, or conditions. Yet to ensure that emission standards are providing the intended benefits in use, we must have a reasonable expectation that emissions under real-world conditions reflect those measured on the test procedure. The defeat-device prohibition is designed to ensure that emission controls are employed during real-world operation, not just under laboratory or test-procedure conditions. However, the defeat-device prohibition is not a quantified standard and does not have an associated test rocedure, so it does not have the clear objectivity and ready enforceability of a numerical standard and test procedure. As a result, relying on just a using a standardized test procedure and the defeat device prohibition makes it harder to ensure that engines will operate with the same level of control in the real world as in the test cell.

Because the ISO E5 duty cycle uses only five modes on an average propeller curve intended to characterize typical marine engine operation for this industry, we are concerned that an engine designed to the duty cycle may not necessarily perform the same way over the range of speed and load combinations normally seen on a boat nor will it always follow the average curve. These duty cycles are based on an average propeller curve, but a propulsion marine engine may never be fitted with an ''average propeller.'' In addition, even if fitted with an ''average propeller,'' an engine fit to a specific boat may operate differently based on how heavily the boat is loaded.

To ensure that emissions are controlled from recreational marine engines over the full range of speed and load combinations normally seen on boats, we are establishing a zone under the engine's power curve where the engine may not exceed a specified emission limit. This limit applies to all of the regulated pollutants under steady-state operation. Testing in this ''not-to-exceed'' (NTE) zone may include the whole range of real ambient conditions. The NTE zone, limit, and ambient conditions are described below.

We believe there are significant advantages to taking this approach. The test procedure is flexible enough to represent the majority of in-use engine operation and ambient conditions. Therefore, the NTE approach takes all of the benefits of a numerical standard and test procedure and expands it to cover a broad range of conditions. Also, a standard that requires laboratory testing makes it harder to perform in-use testing because either the engines must be removed from the vessel or laboratory-type conditions must be achieved on the vessel. With the NTE approach, in-use testing becomes much easier to implement since emissions may be sampled during normal vessel use. Because this approach is objective, it makes enforcement easier and provides more certainty to the industry in terms of what control is expected in-use versus over a fixed laboratory test procedure.

Even with the NTE requirements, we believe it is important to retain standards based on the steady-state duty cycles. This is the standard that we expect the certified marine engines to meet on average in use. The NTE testing is more focused on maximum emissions for segments of operation. We believe

basing the emission standards on a distinct cycle and using the NTE zone to better ensure in-use control creates a comprehensive program. In addition, the steady-state duty cycles give a basis for calculating credits for averaging, banking, and trading.

As described in the Summary and Analysis of Comments, the same technology that can be used to meet the standards over the E5 duty cycle can be used to meet the NTE caps in the NTE zone. We therefore do not expect these standards to cause recreational marine diesel engines to need more advanced technology that is used by the nonroad and commercial marine engines from which they are derived. We do not believe the NTE concept results in a large amount of additional testing, because these engines should be designed to perform as well in use as they do over the steady-state five-mode certification test. However, our cost analysis in Chapter 5 of the Final Regulatory Support Document accounts for some additional testing, especially in the early years, to provide manufacturers with assurance that their engines will meet the NTE requirements.

b. Shape of the NTE zone. Figure VI.C–1 illustrates the NTE zone for recreational marine diesel engines. We based this zone on the range of conditions that these engines might typically see in use. Also, we divide the zone into subzones of operation which have different limits as described below. Chapter 4 of the Final Regulatory Support Document describes the development of the boundaries and conditions associated with the NTE zone. The NTE zone for recreational marine diesel engines is the same for commercial marine diesel engines operating on a propeller curve, except that an additional subzone is added at speeds over 95 percent of rated to address the typical recreational design for higher rated power.

BILLING CODE 6560–50–P

Figure VI.C-1: NTE Zone for Recreational Marine Diesel Engines

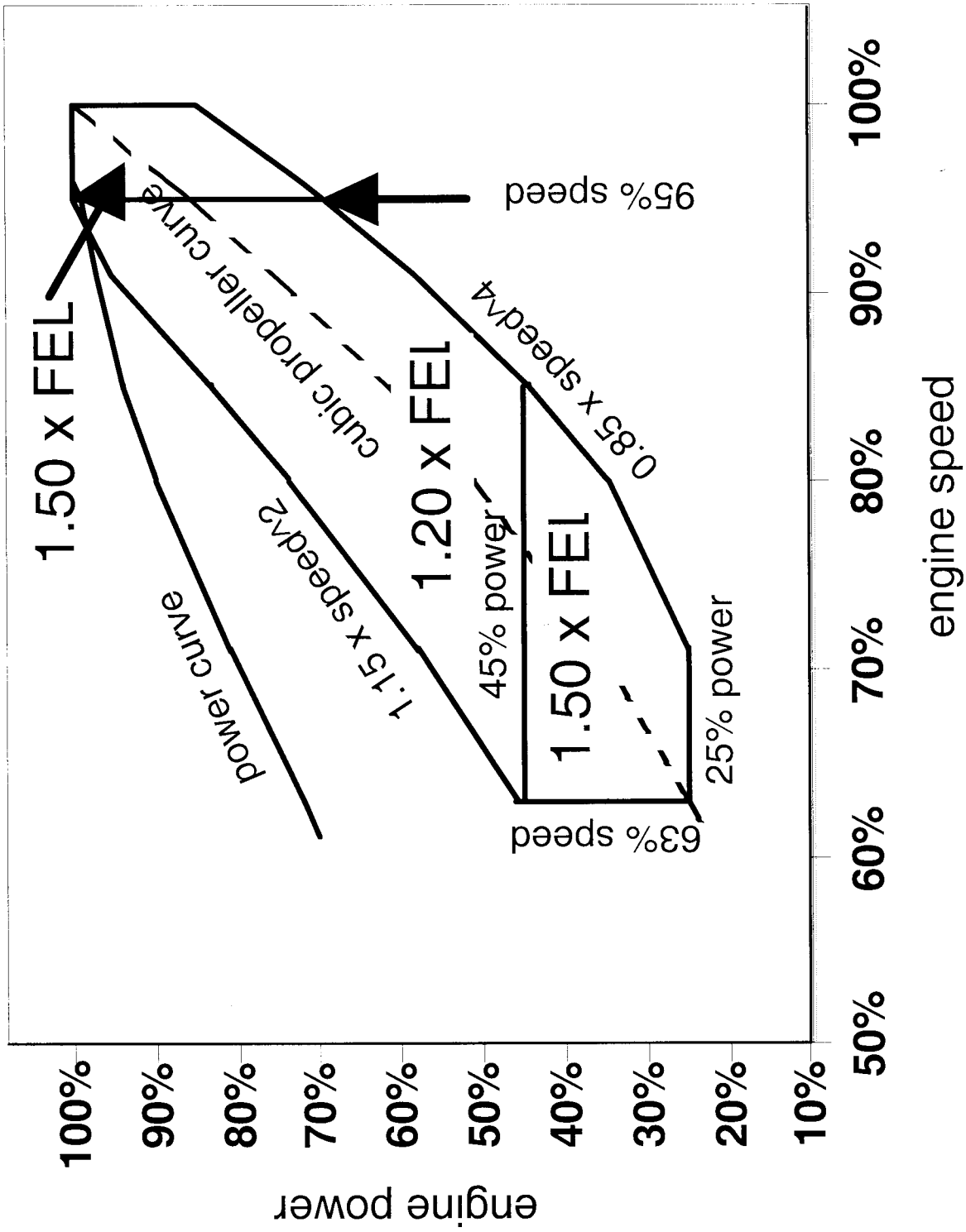

BILLING CODE 6560–50–C

EPA may approve adjustments to the size and shape of the NTE zone for certain engines if the manufacturer demonstrates that the engine will not see operation outside of the revised NTE zone in use. This way, manufacturers can avoid having to test their engines under operation that they will not see in use. However, manufacturers are responsible for ensuring that their specified operation represents real-world operation. In addition, if a manufacturer designs an engine for operation at speeds and loads outside of the NTE zone (*i.e.*, variable-speed engines used with variable-pitch propellers), the manufacturer is responsible for notifying us, so the NTE zone for that engine family can be modified to include this operation.

c. Transient operation. NTE testing includes only steady-state operation with a minimum sampling time of 30 seconds. We specify the ISO E5 steady-state duty cycle for showing compliance with average emission standards. The goal of adopting NTE standards and

procedures is to cover the operation away from the five modes that are on the assumed propeller curve. Our understanding is that the majority of marine engine operation is steady-state; however, we recognize that recreational marine use is likely more transient than commercial marine use. At this time we do not have enough data on marine engine operation to accurately determine the amount of transient operation that occurs or to set an NTE standard for transient operation. We are aware that the high-load transient operation seen when a boat comes to plane is not included in the NTE zone as defined, even if we were to require compliance with NTE standards during transient operation. We are also aware that these speed and load points cannot be achieved under steady-state operation for a properly loaded boat in use. If we find that excluding transient operation from the compliance requirements results in a significant increase in emissions, we will revisit this provision in the future. Also, an engine designed, with multiple injection timing maps based on operation, to operate at higher emissions during transient operation than during steady-state testing would be in noncompliance with our defeat device prohibition.

d. Emission standards. We are requiring emissions caps for the NTE zones that represent a multiplier times the weighted test result used for certification for all of the regulated pollutants ($HC+NO_X$, CO, and PM). This is consistent with the concept of a weighted modal emission test such as the steady-state tests included in this rule. The standard itself is intended to represent the average emissions under steady-state conditions. Because it is an average, some points can be higher, some lower, and the manufacturer will design to maximize performance and still meet the engine standard. The NTE limit is on top of this. It is designed to make sure that no part of the engine operation and that no application goes too far from the average level of control.

Consistent with the requirements for commercial marine engines, recreational marine diesel engines must meet a cap of 1.50 times the certified level for $HC+NO_X$, PM, and CO for the speed and power subzone below 45 percent of rated power and a cap of 1.20 times the certified levels at or above 45 percent of rated power. However, we are applying an additional subzone at speeds greater than 95 percent of rated, with a corresponding standard of 1.50 times the certified levels for this subzone. This additional subzone addresses the typical recreational design for higher rated power. We understand that this power is needed to ensure that the engine can bring the boat to plane. Chapter 4 of the Final Regulatory Support Document provides more detail on how we determined the standards.

We are aware that marine diesel engines may not be able to meet the emissions limit under all conditions. Specifically, there are times when emission control must be compromised for startability or safety. Engine starting is not included in NTE testing. In addition, manufacturers have the option of petitioning the Administrator to allow emissions to increase under engine protection strategies, such as when an engine overheats. This is also consistent with the requirements for commercial marine engines.

e. Ambient conditions. Variations in ambient conditions can affect emissions. Such conditions include air temperature, humidity, and (especially for aftercooled engines) water temperature. We are applying the commercial marine engine ranges for these variables. Chapter 4 of the Final Regulatory Support Document provides more detail on how we determined these ranges. Within the ranges, there is no calculation to correct measured emissions to standard conditions. Outside of the ranges, emissions can be corrected back to the nearest end of the range. The ambient variable ranges are 13 to 35°C (55 to 95°F) for intake air temperature, 7.1 to 10.7 g water/kg dry air (50 to 75 grains/pound dry air) for intake air humidity, and 5 to 27°C (41 to 80°F) for ambient water temperature.[84]

f. Certification. At the time of certification, manufacturers must submit a statement that its engines will comply with these requirements under all conditions that may reasonably be expected to occur in normal vessel operation and use. The manufacturer also provides a detailed description of all testing, engineering analysis, and other information that forms the basis for the statement. This statement may be based on testing other research that validly supports such a statement, consistent with good engineering judgment. EPA may review the basis of this statement during the certification process.

D. Testing Equipment and Procedures

The regulations detail specifications for test equipment and procedures that apply generally to commercial marine engines (including NTE testing) in 40 CFR part 94. We have based the recreational marine diesel engine test procedures on this part. Section VIII gives a general discussion of testing requirements; this section describes procedures that are specific to recreational marine such as the duty cycle for operating engines for emission measurements. Chapter 4 of the Draft Regulatory Support Document describes these duty cycles in greater detail. In addition to the information provided above, the following section discusses issues concerning test equipment and procedures.

1. Which Duty Cycles Are Used To Measure Emissions?

For recreational marine diesel engines, we specify the ISO E5 duty cycle. This is a 5-mode steady state cycle, including an idle mode and four modes lying on a cubic propeller curve. ISO intends for this cycle to be used for all engines in boats less than 24 meters in length. We apply it to all recreational marine diesel engines to avoid the complexity of tying emission standards to boat characteristics. A given engine may be used in boats longer and shorter than 24 meters; engine manufacturers generally will not know the size of the boat into which an engine will be installed. Also, we expect that most recreational boats will be under 24 meters in length. Chapter 4 of the Final Regulatory Support Document provides further detail on the ISO E5 duty cycle.

2. What Fuels Will Be Used During Emission Testing?

We are applying the same specifications for recreational marine diesel engines that we established for commercial marine diesel engines. That means that the recreational engines will use the same test fuel that is required for testing Category 1 commercial marine diesel engines, which is a regular nonroad test fuel with moderate sulfur content. We are not aware of any difference in fuel specifications for recreational and commercial marine engines of comparable size.

3. How Does In-Use Testing Work?

In-use testing on marine engines may be used to ensure compliance in use. This testing may include taking in-use marine engines out of the vessel and testing them in a laboratory, as well as field testing of in-use engines on the boat, in a marine environment.

We plan to use field-testing data in two ways. First, we may use it as a screening tool, with follow-up laboratory testing over the ISO E5 duty cycle or NTE zone where appropriate. Second, we may use the data directly as a basis for compliance determinations,

[84] The range of intake air temperature is 13 to 30°C for engines that draw air from outside the engine room.

as long as field-testing equipment and procedures are capable of providing reliable information from which conclusions can be drawn regarding what emission levels would be with laboratory-based measurements. Because it would likely be difficult to match the E5 test points exactly on an engine in use on a vessel, NTE zone testing will reduce the difficulty of in-use compliance determinations.

For marine engines that expel exhaust gases underwater or mix their exhaust with water, manufacturers must equip engines with an exhaust sample port where a probe can be inserted for in-use exhaust emission testing. It is important that the location of this port allow a well-mixed and representative sample of the exhaust. This provision is intended to simplify in-use testing. In cases where the engine manufacturer does not supply enough of the exhaust system to add a sample port, the engine manufacturer would be required to provide installation instructions for a sample port. Vessel manufacturers would be required to follow this and any other emission-related installation instructions.

One of the advantages of the not-to-exceed requirements will be to facilitate in-use testing. This will allow us to perform compliance testing in the field. As long as the engine is operating under steady-state conditions in the NTE zone, we will be able to measure emissions and compare them to the NTE limits. To assist in this testing, engines with electronic controls will be required to broadcast engine torque (as percent of maximum) and engine speed on their controller area networks.

4. How Is the Maximum Test Speed Determined?

To ensure that a manufacturer's declared maximum speed is representative of actual engine operating characteristics and is not improperly used to influence the parameters under which their engines are certified, we are applying the definition of maximum test speed used for commercial marine engines. This definition of maximum test speed is the single point on an engine's normalized maximum power versus speed curve that lies farthest away from the zero-power, zero-speed point.

In establishing this definition of maximum test speed, it was our intent to specify the highest speed at which the engine is likely to be operated in use. Under normal circumstances this maximum test speed should be close to the speed at which peak power is achieved. However, as some manufacturers indicated in their comments, it is possible under this definition for the maximum test speed to be very different than the speed at which peak power is achieved. This could result in the certification test cycle and the NTE zone (which are both defined in part by the maximum test speed) being unrepresentative of in-use operation. Since we were aware of this potential during the development of the commercial marine regulations, we included two provisions to address issues such as these. First, § 94.102 allows EPA to modify test procedures in situations where the specified test procedures would otherwise be unrepresentative of in-use operation. Thus, in cases in which the definition of maximum test speed resulted in an engine speed that was not expected to occur with in-use engines, we would work with the manufacturers to determine the maximum speed that would be expected to occur in-use.

Second, § 94.106(c)(2) allows EPA to specify during certification a broader NTE zone to include actual in-use operation. In those cases where we could not specify a single maximum test speed under § 94.102 that would sufficiently cover the range of in-use engine speeds, we would specify a broader NTE zone. For example, we would generally expect that the NTE zone would include the peak power point. If the maximum test speed derived under §§ 94.102 and 94.107 resulted in an NTE zone that did not include the peak power point, we would likely specify that the NTE zone be broadened to include that point. Similarly, we would expect that a manufacturer's advertised rated power/speed point should be within the NTE zone, and could broaden the NTE zone to include that point as well.

E. Special Compliance Provisions

The provisions discussed here are designed to minimize regulatory burdens on manufacturers needing added flexibility to comply with emission standards. These manufacturers include engine dressers, small-volume engine marinizers, and small-volume boat builders. Commenters generally supported these provisions as proposed.

1. What Are the Burden Reduction Approaches for Engine Dressers?

Many recreational marine diesel engine manufacturers take a new, land-based engine and modify it for installation on a marine vessel. Some of the companies that modify an engine for installation on a boat make no changes that might affect emissions. Instead, the modifications may consist of adding mounting hardware and a generator or reduction gears for propulsion. It can also involve installing a new marine cooling system that meets original manufacturer specifications and duplicates the cooling characteristics of the land-based engine, but with a different cooling medium (such as sea water). In many ways, these manufacturers are similar to nonroad equipment manufacturers that purchase certified land-based nonroad engines to make auxiliary engines. This simplified approach of producing an engine can more accurately be described as dressing an engine for a particular application. Because the modified land-based engines are subsequently used on a marine vessel, however, these modified engines will be considered marine diesel engines, which then fall under these requirements.

To clarify the responsibilities of engine dressers under this rule, we will not treat them as a manufacturer of a recreational marine diesel engine and therefore they would not be required to obtain a certificate of conformity, as long as they meet the following seven conditions.

(1) The engine being dressed (the ''base'' engine) must be a highway, land-based nonroad, or locomotive engine, certified pursuant to 40 CFR part 86, 40 CFR part 89, or 40 CFR part 92, respectively, or a marine diesel engine certified pursuant to this part.

(2) The base engine's emissions, for all pollutants, must meet the otherwise applicable recreational marine emission limits. In other words, starting in 2005, a dressed nonroad Tier 1 engine will not qualify for this exemption, because the more stringent standards for recreational marine diesel engines go into effect at that time.

(3) The dressing process must not involve any modifications that can change engine emissions. We do not consider changes to the fuel system to be engine dressing because this equipment is integral to the combustion characteristics of an engine.

(4) All components added to the engine, including cooling systems, must comply with the specifications provided by the engine manufacturer.

(5) The original emissions-related label must remain clearly visible on the engine.

(6) The engine dresser must notify purchasers that the marine engine is a dressed highway, nonroad, or locomotive engine and is exempt from the requirements of 40 CFR part 94.

(7) The engine dresser must report annually to us the models that are exempt pursuant to this provision and such other information as we deem

necessary to ensure appropriate use of the exemption.

Any engine dresser not meeting all these conditions will be considered an engine manufacturer and will accordingly need to obtain a certificate of conformity for these new engines, consistent with this rule's provisions, and label the engine showing that it is available for use as a marine engine.

An engine dresser violating the above criteria might be liable under anti-tampering provisions for any change made to the land-based engine that affects emissions. The dresser might also be subject to a compliance action for selling new marine engines that are not certified to the required emission standards. For an engine dresser complying with the above provisions, the original certificate would remain in effect and the certifier of the engine would remain liable for the emissions performance of the engine.

2. What Special Provisions Is EPA Adopting for Small Entities?

In addition to provisions for engine dressers, we are also finalizing special provisions designed to provide flexibility to small entities. Prior to the proposal, we conducted an inter-agency Small Business Advocacy Review Panel as described in Section XI.C. With input from small-entity representatives, the panel drafted a report with findings and recommendations on how to reduce the potential small-business burden resulting from this rule. The inter-agency panel's recommendations were proposed by EPA and are now being finalized as proposed. The following sections describe these provisions.

3. What Are the Burden Reduction Approaches for Small-Volume Engine Marinizers?

We are providing additional options for small-volume engine marinizers. The purpose of these options is to reduce the burden on companies for which fixed costs cannot be distributed over a large number of engines. For this reason, we are defining a small-volume engine manufacturer based on annual U.S. sales of engines and are providing the additional options on this basis rather than on business size in terms of number of employees, revenue, or other such measures. The production count we are using includes all engines (automotive, other nonroad, etc.) and not just recreational marine engines. We consider recreational marine diesel engine manufacturers to be small volume for purposes of this provision if they produce fewer than 1,000 internal combustion engines per year. Based on our characterization of the industry, there is a natural break in production volumes above 500 engine sales where the next smallest manufacturers make tens of thousands of engines. We chose 1,000 engines as a limit because it groups together all the marinizers most needing relief, while still allowing for reasonable sales growth.

The options for small-volume marinizers are discussed below.

a. Broaden engine families. We have established engine criteria for distinguishing between engine families, which is intended to divide a manufacturer's product line into multiple engine families. We are allowing small-volume marinizers to put all of their models into one engine family (or more as necessary) for certification purposes. Marinizers would then certify using the ''worst-case'' configuration. This approach is consistent with the option offered to post-manufacture marinizers under the commercial marine regulations. The advantage of this approach is that it minimizes certification testing because the marinizer can use a single engine in the first year to certify their whole product line. As for large companies, the small-volume manufacturers could then carry-over data from year to year until changing engine designs in a way that might significantly affect emissions.

We understand that this option alone still requires a certification test and the associated burden for small-volume manufactures. We consider this to be the foremost cost concern for some small-volume manufacturers, because the test costs are spread over low sales volumes. Also, we recognize that it may be difficult to determine the worst-case emitter without additional testing. We are requiring testing because we need a reliable, test-based technical basis to issue a certificate for these engines. Manufacturers will be able to use carry-over to spread costs over multiple years of production.

b. Minimize compliance requirements. Production-line and deterioration testing requirements do not apply to small-volume marinizers. We will assign a deterioration factor for use in calculating end-of-life emission factors for certification. The advantages of this approach would be to minimize compliance testing. Production-line and deterioration testing would be more extensive than a single certification test.

c. Expand engine dresser flexibility. We are expanding the engine dresser definition for small-volume marinizers to include water-cooled turbochargers where the goal is to match the performance of the non water-cooled turbocharger on the original certified configuration. We believe this would provide more opportunities for diesel marinizers to be excluded from certification testing if they operate as dressers.

d. Streamlined certification. We will allow small-volume marinizers to certify to the not-to-exceed (NTE) requirements with a streamlined approach. We believe small-volume marinizers can make a satisfactory showing that they meet NTE standards with limited test data. Similar to the standard NTE program, once these manufacturers test engines over the five-mode certification duty cycle (E5), they can use those or other test points to extrapolate the results to the rest of the NTE zone. For example, an engineering analysis may consider engine timing and fueling rate to determine how much the engine's emissions may change at points not included in the E5 cycle. For this streamlined NTE approach, keeping all four test modes of the E5 cycle within the NTE standards will be enough for small-volume marinizers to certify compliance with NTE requirements, as long as there are no significant changes in timing or fueling rate between modes.

e. Delay standards for five years. Applying a five-year delay, the standards take effect from 2011 to 2014 for small-volume marinizers, depending on engine size. Marinizers may apply this five-year delay to all or just a portion of their production. They may therefore still sell engines that meet the standards when possible on some product lines while delaying introduction of emission-control technology on other product lines. This option provides more time for small marinizers to redesign their products, allowing time to learn from the technology development of the rest of the industry. Boat builders may use these uncertified engines in their vessels.

While we are concerned about the loss of emission control from part of the fleet during this time, we recognize the special needs of small-volume marinizers and believe the added time may be necessary for these companies to comply with emission standards. This additional time will allow small-volume marinizers to obtain and implement proven, cost-effective emission-control technology.

f. Hardship provisions. We are adopting two hardship provisions for small-volume marinizers. Marinizers may apply for this relief on an annual basis. First, small marinizers may petition us for additional time to comply with the standards. The marinizer must show that it has taken all possible steps to comply but the burden of compliance costs will have a

major impact on the company's solvency. Also, if a certified base engine is available, the marinizer must generally use this engine. We believe this provision will protect small-volume marinizers from undue hardship due to certification burden. Also, some emission reduction can be gained if a certified base engine becomes available.

Second, small-volume marinizers may also apply for hardship relief if circumstances outside their control caused the failure to comply (such as a supply contract broken by parts supplier) and if failure to sell the subject engines will have a major impact on the company's solvency. We consider this relief mechanism to be an option of last resort. We believe this provision will protect small-volume marinizers from circumstances outside their control. We, however, intend to not grant hardship relief if contract problems with a specific company prevent compliance for a second time.

Although the inter-agency panel did not specify a time limit for these hardship provisions, and we are not finalizing any such time limits, we envision these hardship provisions as transitional in nature. We would expect their use to be limited to the early years of the program, in a similar time frame as we are establishing for the recreational vehicle hardship provisions, as discussed in Section VII.C.

4. What Are the Burden Reduction Approaches for Small-Volume Boat Builders Using Recreational Marine Diesel Engines?

The inter-agency panel also recommended burden reduction approaches for small-volume boat builders. The recommendations were based on the concerns that, although boat builders are not subject to the engine-based emission standards, they are required to use certified engines and may need to redesign engine compartments on some boats if engine designs were to change significantly. EPA proposed the flexibilities recommended by the panel and are finalizing them as proposed.

We are adopting four options for small-volume vessel manufacturers using recreational marine diesel engines. These options are intended to reduce the burden on companies for which fixed costs cannot be distributed over a large number of vessels. As proposed, we are therefore defining a small-volume boat builder as one that produces fewer than 100 boats for sale in the U.S. in one year and has fewer than 500 employees. The production count includes all engine-powered recreational boats. These options may be used at the manufacturer's discretion. The options for small-volume boat builders are discussed below.

a. Percent-of-production delay. Manufacturers with a written request from a small-volume boat builder and prior approval from us may produce a limited number of uncertified recreational marine diesel engines. From 2006 through 2010, small-volume boat builders may purchase uncertified engines to sell in boats for an amount equal to 80 percent of engine sales for one year. For example, if the small boat builder sells 100 engines per year, a total of 80 uncertified engines may be sold over the five-year period. This will give small boat builders an option to delay using new engine designs for a portion of business. Engines produced under this flexibility must be labeled accordingly so that customs inspectors know which uncertified engines can be imported. We continue to believe this approach is appropriate and are finalizing it as proposed.

b. Small-volume allowance. This allowance is similar to the percent-of-production allowance, but is designed for boat builders with very small production volumes. The only difference with the above allowance is that the 80-percent allowance described above may be exceeded, as long as sales do not exceed either 10 engines per year or 20 engines over five years (2006 to 2010). This applies only to engines less than or equal to 2.5 liters per cylinder.

c. Existing inventory and replacement engine allowance. Small-volume boat builders may sell their existing inventory after the implementation date of the new standards. However, no purposeful stockpiling of uncertified engines is permitted. This provision is intended to allow small boat builders the ability to turn over engine designs.

d. Hardship relief provision. Small boat builders may apply for hardship relief if circumstances outside their control caused the problem (for example, if a supply contract were broken by the engine supplier) and if failure to sell the subject vessels will have a major impact on the company's solvency. This relief allows the boat builder to use an uncertified engine and is considered a mechanism of last resort. These hardship provisions are consistent with those currently in place for post-manufacture marinizers of commercial marine diesel engines.

F. Technical Amendments

The regulations include a variety of amendments to the programs already adopted for marine spark-ignition and diesel engines, as described in the following paragraphs.

1. 40 CFR Part 91: Outboards and Personal Watercraft

We have identified four principal amendments to the requirements for outboard and personal watercraft engines. First, we are adding a definition of United States which is ''the States, the District of Columbia, the Commonwealth of Puerto Rico, the Commonwealth of the Northern Mariana Islands, Guam, American Samoa, the U.S. Virgin Islands, and the Trust Territory of the Pacific Islands.'' This definition is consistent with that included in 40 CFR part 94 for marine diesel engines. This is especially helpful in clearing up questions related to U.S. territories in the Carribean Sea and the Pacific Ocean. Second, we have found two typographical errors in the equations needed for calculating emission levels in 40 CFR 91.419. Third, we are adjusting the regulation language to clarify testing rates for the in-use testing program. The regulations currently specify a maximum rate of 25 percent of a manufacturer's engine families subject to in-use testing. The revised language states that for manufacturers with fewer than four engine families subject to in-use testing, the maximum testing rate is one family per year in place of the percentage calculation. Finally, we are revising the regulatory provision prohibiting emission controls that lead to increases of noxious or toxic compounds that would pose an unreasonable risk to the public, as described in Section II.B.2.

2. 40 CFR Part 94: Commercial Marine Diesel Engines

We are adopting several regulatory amendments to the program for commercial marine diesel engines. Many of these are straightforward edits for correct grammar and cross references. We are also changing the definition of United States, as described in the previous section.

We are adding a definition for spark-ignition, consistent with the existing definition for compression-ignition, which will allow us to define compression-ignition as any engine that is not spark-ignition. This will help ensure that marine emission standards for the different types of engines fit together appropriately.

The discussion of production-line testing in Section II.C.4 specifies reduced testing rates after two years of consistent good performance. We are extending this provision to commercial marine diesel engines as well.

The test procedures for Category 2 marine engines give a cross-reference to 40 CFR part 92, which defines the procedures for testing locomotives and locomotive engines. Part 92 specifies a wide range of ambient temperatures for testing, to allow for outdoor measurements. We expect all testing of Category 2 marine engines to occur indoors and are therefore adopting a range of 13° to 30° C (55° to 86° F) for emission testing.

Finally, we are revising the regulatory provision prohibiting emission controls that lead to increases of noxious or toxic compounds that would pose an unreasonable risk to the public, as described in Section II.B.2.

G. Technological Feasibility

We have concluded that the emission-reduction strategies expected for land-based nonroad diesel engines and commercial marine diesel engines can also be applied to recreational marine diesel engines, such that these emission reductions strategies will provide compliance with recreational marine diesel emission standards. Marine diesel engines are generally derivatives of land-based nonroad and highway diesel engines. Marine engine manufacturers and marinizers make modifications to the engine to make it ready for use in a vessel. These modifications can range from basic engine mounting and cooling changes to a restructuring of the power assembly and fuel management system. Chapters 3 and 4 of the Final Regulatory Support Document discuss this process in more detail. Also, we have collected emission data demonstrating the feasibility of the steady state average standard and not-to-exceed requirements. These data are presented in Chapter 4 of the Final Regulatory Support Document.

1. Implementation Schedule

For recreational marine diesel engines, the implementation schedule allows an additional two years of delay beyond the commercial marine diesel standards. This represents up to a five-year lead time relative to the implementation dates of the land-based nonroad standards. This allows time for the carryover of technology from land-based nonroad and commercial marine diesel engines. In addition, these implementation dates represent three to six years of lead time beyond publication of this final rule.

2. Standard Levels

Marine diesel engines are typically derived from or use the same technology as land-based nonroad and commercial marine diesel engines and should therefore be able to effectively use the same emission-control strategies. In fact, recreational marine engines can better use the water they operate in as a cooling medium compared with commercial marine, because they are able to use raw-water aftercooling. This can help them reduce charge-air intake temperatures more easily than the commercial models and much more easily than land-based nonroad diesel engines. Cooling the intake charge reduces the formation of NO_X emissions and thus indirectly enables other HC and PM control strategies. As a result, baseline recreational engines generally have lower NO_X emissions than uncontrolled commercial marine engines. Therefore, we believe that recreational marine engines can meet the same standard levels as are in place for commercial marine engines without sacrificing power or increasing weight of the engine.

3. Technological Approaches

We anticipate that manufacturers will meet the new emission standards for recreational marine diesel engines primarily with technology that will be applied to land-based nonroad and commercial marine diesel engines. Much of this technology has already been established in highway applications and is being used in limited land-based nonroad and marine applications. Our analysis of this technology is described in detail in Chapters 3 and 4 of the Final Regulatory Support Document and is summarized here.

By adopting standards that don't go into place until 2006, we are providing engine manufacturers with substantial lead time for developing, testing, and implementing emission-control technologies. This lead time and the coordination of standards with those for land-based nonroad engines allows time for a comprehensive program to integrate the most effective emission-control approaches into the manufacturers' overall design goals related to durability, reliability, and fuel consumption.

Engine manufacturers have already produced limited numbers of low-NO_X marine diesel engines. More than 80 of these engines have been placed into service in California through demonstration programs. Through the demonstration programs, we were able to gain some insight into what technologies can be used to meet the new emission standards. Chapter 4 presents data on 25 of these engines tested over the E5 duty cycle. Although only one of these engines has been shown to meet the HC+NO_X and PM standards, many of these engines are well below either the HC+NO_X or PM standards or are close to meeting both. With further optimization, we believe these engine designs can be used to meet the exhaust emission standards for recreational marine diesel engines.

Highway engines have been the leaders in developing new emission-control technology for diesel engines. Because of the similar engine designs in land-based nonroad and marine diesel engines, it is clear that much of the technological development that has led to lower-emitting highway engines can be transferred or adapted for use on land-based nonroad and marine engines. Much of the improvement in emissions from these engines comes from ''internal'' engine changes such as variation in fuel-injection variables (injection timing, injection pressure, spray pattern, rate shaping), modified piston bowl geometry for better air-fuel mixing, and improvements intended to reduce oil consumption. Introduction and ongoing improvement of electronic controls have played a vital role in facilitating many of these improvements.

Turbocharging is widely used now in marine applications, especially in larger engines, because it improves power and efficiency by compressing the intake air. Turbocharging may also be used to decrease particulate emissions in the exhaust. Today, marine engine manufacturers generally have to rematch the turbocharger to the engine characteristics of the marine version of a nonroad engine and often will add water jacketing around the turbocharger housing to keep surface temperatures low. Once the nonroad Tier 2 engines are available to the marine industry, matching the turbochargers for the engines will be an important step in achieving low emissions.

Aftercooling is a well established technology for reducing NO_X by decreasing the temperature of the charge air after it has been heated during compression. Decreasing the charge-air temperature directly reduces the peak cylinder temperature during combustion, which is the primary cause of NO_X formation. Air-to-water and water-to-water aftercoolers are well established for land-based applications. For engines in marine vessels, there are two different types of aftercooling: jacket-water and raw-water aftercooling. With jacket-water aftercooling, the fluid that extracts heat from the aftercooler is itself cooled by ambient water. This cooling circuit may either be the same circuit used to cool the engine or it may be a separate circuit. By incorporating a separate circuit, marine engine

manufacturers can further reduce charge-air temperatures. This separate circuit can result in even lower temperatures with raw water as the coolant. This means that ambient water is pumped directly to the aftercooler. Raw-water aftercooling is currently widely used in recreational applications. Because of the access that marine engines have to a large ambient water cooling medium, we anticipate that marine diesel engine manufacturers will largely reduce NO_X emissions with aftercooling.

Electronic controls also offer great potential for improved control of engine parameters for better performance and lower emissions. Unit pumps or injectors allow higher-pressure fuel injection with rate shaping to carefully time the delivery of the whole volume of injected fuel into the cylinder. Marine engine manufacturers can take advantage of modifications to the routing of the intake air and the shape of the combustion chamber of nonroad engines for improved mixing of the fuel-air charge. Separate-circuit aftercooling (both jacket-water and raw-water) will likely gain widespread use in turbocharged engines to increase performance and lower NO_X.

Fuel injection changes and other NO_X control strategies typically reduce engine noise, sometimes dramatically. One important source of noise in diesel combustion is the sound associated with the combustion event itself. When a premixed charge of fuel and air ignites, the very rapid combustion leads to a sharp increase in pressure, which is easily heard and recognized as the characteristic sound of a diesel engine. The conditions that lead to high noise levels also cause high levels of NO_X formation.

The impact of the new emission standards on energy is measured by the effect on fuel consumption from complying engines. Many of the marine engine manufacturers are expected to retard engine timing which increases fuel consumption somewhat. Most of the technology changes anticipated in response to the new standards, however, have the potential to reduce fuel consumption as well as emissions. Redesigning combustion chambers, incorporating improved fuel injection systems, and introducing electronic controls provide the engine designer with powerful tools for improving fuel efficiency while simultaneously controlling emission formation. To the extent that manufacturers add aftercooling to non aftercooled engines and shift from jacket-water aftercooling to raw-water aftercooling, there will be a marked improvement in fuel-efficiency. Manufacturers of highway diesel engines have been able to steadily improve fuel efficiency even as new emission standards required significantly reduced emissions.

There are no apparent safety issues associated with the new emission standards. Marine engine manufacturers will likely use only proven technology that is currently used in other engines such as nonroad land-based diesel applications, locomotives, and diesel trucks. The main technological approach will likely be optimization and calibration of their fuel injection and air management systems.

4. Our Conclusions

The new emission standards for recreational marine diesel engines reasonably reflect what manufacturers can achieve through the application of available technology to current recreational marine diesel engines. Recreational marine engine manufacturers will need to use the available lead time to develop the necessary emission-control strategies, including transfer of technology from land-based nonroad and commercial marine diesel engines. This development effort will require not only achieving the targeted emission levels, but also ensuring that each engine will meet all performance and emission requirements over its useful life. As discussed in Section IX, the new standards represent significant reductions compared with baseline emission levels.

Based on information currently available, we conclude it is feasible for recreational marine diesel engine manufacturers to meet the new emission standards using combinations of technological approaches discussed above and in Chapters 3 and 4 of the Final Regulatory Support Document. While the technologies described above are expected to yield the full degree of emission reduction anticipated, it is possible that manufacturers may also rely on a modest degree of fuel-injection timing retard as a strategy for complying with emission standards. This is due to variations in engine designs and baseline injection timing. For instance, an engine with very advanced injection timing in its baseline configuration would likely need to employ some timing retard to meet the standards.

The transfer of technology from land-based nonroad and commercial marine engines is an important factor in our determination that the recreational marine diesel engine standards are feasible. Most marine diesel engine models also serve in land-based applications. Sales of land-based versions of these engines are usually much greater than those of the marine counterpart versions, so manufacturers typically focus their primary technology development efforts on their land-based products. Manufacturers then modify these engines for use in marine applications. These changes can be extensive, but they rarely involve basic R&D for new technologies. We do not anticipate the use of advanced technology such as particulate filters and NO_X adsorbers on trucks until the 2007 time frame. Therefore, we do not believe that it would be appropriate to implement standards, at this time, that would require the use of advanced technology that has yet to be developed for the higher volume land-based diesel engine market. We would, however, consider this technology in the future for setting further tiers of marine engine emission standards.

In addition, we have incorporated various options that will permit marinizers and boat builders to respond to engine changes in an orderly way. We expect that meeting these requirements will pose a challenge, but one that is feasible taking into consideration the availability and cost of technology, time, noise, energy, and safety.

VII. General Nonroad Compliance Provisions

This section describes a wide range of compliance provisions that apply generally to all the spark-ignition engines and vehicles subject to the new emission standards. Several of these provisions apply not only to manufacturers and importers, but also to equipment manufacturers installing certified engines, remanufacturing facilities, operators, and others.

The regulatory text for the compliance requirements for Large SI engines and recreational vehicles are in a new Part 1068 of Title 40, entitled ''General Compliance Programs for Nonroad Engines.'' The compliance provisions for recreational marine diesel engines are generally the same as those already adopted for commercial marine diesel engines (40 CFR part 94).

The following discussion of the general nonroad provisions follows the regulatory text. For ease of reference, the subpart designations for 40 CFR part 1068 are provided. Where different provisions apply to the marine engines, we note those differences in this section.

A. Miscellaneous Provisions (Part 1068, Subpart A)

This subpart contains general provisions to define terms and the scope of application for all of 40 CFR part

1068. Other provisions concern how we handle confidential information, how the EPA Administrator delegates decision-making authority, and when we may inspect a manufacturer's facilities, engines, or records.

The process of testing engines and preparing an application for certification requires the manufacturer to make a variety of judgments. This includes, for example, selecting test engines, operating engines between tests, and developing deterioration factors. The regulations describe the methodology we use to evaluate concerns related to how manufacturers use good engineering judgment in cases where the manufacturer has such discretion (see 40 CFR 1068.5 and 40 CFR 94.221). If we find a problem in these areas, we will take into account the degree to which any error in judgment was deliberate or in bad faith. This subpart is consistent with provisions already adopted for light-duty highway vehicles and commercial marine diesel engines.

B. Prohibited Acts and Related Requirements (Part 1068, Subpart B)

The provisions in this subpart establish a set of prohibitions for engine manufacturers (including importers), equipment manufacturers, operators, engine rebuilders, and owners/operators to ensure that engines meet the emission standards. These provisions are intended to help ensure that each new engine sold or otherwise entered into commerce in the United States is certified to the relevant standards, that it remains in its certified configuration throughout its lifetime, and that only certified engines are used in the appropriate nonroad equipment.

1. General Prohibitions (§ 1068.101)

This regulation contains several prohibitions consistent with the Clean Air Act. No one may sell a new engine subject to the emission standards (or equipment containing such an engine) in the United States without a valid certificate of conformity issued by EPA, deny us access to relevant records, or keep us from entering a facility to test or inspect engines. In addition, no one may remove or disable a device or design element that may affect an engine's emission levels, or manufacture any device that will make emission controls ineffective, which we consider tampering. Other prohibitions reinforce manufacturers' obligations to meet various certification requirements. We also prohibit selling engine parts that prevent emission-control systems from working properly. Finally, for engines that are excluded because they are used in applications not covered by these regulations (for example, stationary or solely for competition), we generally prohibit using these engines in regulated applications.

These prohibitions are the same as those that apply to other engines we have regulated in previous rulemakings. Each prohibited act has a corresponding maximum penalty as specified in Clean Air Act section 205. As provided for in the Federal Civil Penalties Inflation Adjustment Act of 1990, Pub. L. 10–410, these maximum penalties are periodically adjusted by regulation to account for inflation. The current penalty amount for each violation is $31,500.[85]

2. Equipment Manufacturer Provisions (§ 1068.105)

Equipment manufacturers may not sell new equipment with uncertified engines once the emission standards begin to apply. We allow a grace period for equipment manufacturers to use up their supply of uncertified engines, as long as they follow their normal inventory practices for buying engines.

We require equipment manufacturers to observe the engine manufacturers' emission-related installation specifications to ensure that the engine remains in its certified configuration. This may include such things as radiator specifications, placement of catalytic converters, diagnostic signals and interfaces, and steps to minimize evaporative emissions.

If equipment manufacturers install a certified engine in a way that obscures the engine label, they must add a duplicate label on the equipment.

If equipment manufacturers don't fulfill the responsibilities we describe in this section, we consider them to be violating one or more of the prohibited acts described above.

3. In-Service Engines (§ 1068.110)

The regulations prevent manufacturers from requiring owners to use any certain brand of aftermarket parts and give the manufacturer responsibility for engine servicing related to emissions warranty, leaving the responsibility for all other maintenance with the owner. This regulation also reserves our right to do testing (or require testing) to determine compliance with emission standards and investigate potential defeat devices, as authorized by the Act.

[85] EPA acted to adjust the maximum penalty amount in 1996 (61 FR 69364, December 31, 1996) and 2002 (67 FR 41343, June 18, 2002). See also 40 CFR part 19.

4. Engine Rebuilding (§ 1068.120)

We are establishing rebuild provisions for all the nonroad engines subject to the emission standards in this final rule. This approach is similar to what applies to heavy-duty highway engines, nonroad diesel engines, and commercial marine diesel engines. This is necessary to prevent an engine rebuilder from rebuilding engines in a way that disables the engine's emission controls or compromises the effectiveness of the emission-control system. For businesses involved in commercial engine rebuilding, we are adopting minimal recordkeeping requirements so rebuilders can show that they comply with regulations.

In general, we require anyone rebuilding a certified engine to restore it to its original (or a lower-emitting) configuration. We are adding unique requirements for rebuilders to replace some critical emission-control components such as fuel injectors and oxygen sensors in all rebuilds for engines that use those technologies, unless there is reason to believe that those components are still working properly. We also require that rebuilders replace an existing catalyst if there is evidence that it is not functional; for example, if a catalyst has lost its physical integrity with loose pieces rattling inside, it would need to be replaced.

The rebuilding provisions define good rebuilding practices to avoid violating the prohibition on ''removing or disabling'' emission-control systems. We are therefore extending these provisions to individuals who rebuild their own engines, but without any recordkeeping requirements.

C. Exemptions (Part 1068, Subpart C)

We are including several exemptions for certain specific situations. Most of these are consistent with previous rulemakings. We highlight the new or different provisions in the following paragraphs. In general, exempted engines must comply with the requirements only in the sections related to the exemption. Note that additional restrictions may apply to importing exempted engines (see Section VII.D). Also, we may require manufacturers (or importers) to add a permanent label describing that the engine is exempt from emission standards for a specific purpose. In addition to helping us enforce emission standards, this helps ensure that imported engines clear Customs without difficulty.

1. Testing

Anyone may request an exemption for engines used only for research or other investigative purposes.

2. Manufacturer-Owned Engines

Engines that are used by engine manufacturers for development or marketing purposes may be exempted from regulation if they are maintained in the manufacturers' possession and are not used for any revenue-generating service.

3. Display Engines

Anyone may request an exemption for engines intended for only for display.

4. National Security

In general, engines installed in combat-related equipment are exempt from emission standards. In addition, engine manufacturers may request and receive an exemption for other engines if they are needed by an agency of the federal government responsible for national defense. The request for exemptions in these cases must include the endorsement of the procuring government agency.

5. Exported Engines

Engines that will be exported to countries that don't have the same emission standards as those that apply in the United States are exempted without a request. This exemption is not available if the destination country has the same emission standards as those in the United States.

6. Competition Engines

New engines used solely for competition are generally excluded or exempted from regulations that apply to nonroad engines. For purposes of our certification requirements, manufacturers receive an exemption if they can show that they produce an engine model specifically for use solely in competition. In addition, engines that have been modified for use in competition are exempt from the prohibition against tampering described above (without need for request). The literal meaning of the term ''used solely for competition'' would apply for these modifications. We therefore do not allow anyone to use the engine for anything other than competition once it has been modified. This also applies to someone who later buys the engine, so we require the person modifying the engine to remove or deface the original engine label and inform a subsequent buyer in writing of the conditions of the exemption.

7. Replacement Engines

An exemption is available to engine manufacturers without request if that is the only way to replace an engine from the field that was produced before the current emission standards took effect. If less stringent standards applied to the old engine when it was new, the replacement engine must at a minimum meet those standards.

8. Hardship Related to Economic Burden

There are two types of hardship provisions. The first type of hardship program allows small businesses to petition EPA for up to three years of additional lead time to comply with the standards. A small manufacturer must demonstrate that it has taken all possible business, technical, and economic steps to comply but the burden of compliance costs will have a significant impact on the company's solvency. A manufacturer must provide a compliance plan detailing when and how it will achieve compliance with the standards. Hardship relief may include requirements for reducing emission on an interim basis and/or purchasing and using emission credits. The length of the hardship relief decided during review of the hardship application may be up to one year, with the potential to extend the relief as needed. The second hardship program allows companies to apply for hardship relief if circumstances outside their control cause the failure to comply (such as a supply contract broken by parts supplier) and if the failure to sell the subject engines will have a major impact on the company's solvency. We would, however, not grant hardship relief if contract problems with a specific company prevent compliance for a second time.

9. Hardship for Equipment Manufacturers

Equipment manufacturers in many cases depend on engine manufacturers to supply certified engines in time to produce complying equipment by the date emission standards begin to apply. This is especially true for industrial and marine applications. In other programs, equipment manufacturers have raised concerns of certified engines being available too late for equipment manufacturers to adequately accommodate changing engine size or performance characteristics. To address this concern, in unusual circumstances, equipment manufacturers may request up to one extra year before using certified engines if they are not at fault and will face serious economic hardship without an extension.

In addition, we are aware that some manufacturers of nonroad engines are dependent on another engine manufacturer to supply base engines that are then modified for the final application. Much like equipment manufacturers, these ''secondary engine manufacturers'' may face difficulty in producing certified engines if the manufacturer selling the base engine makes an engine model unavailable with short notice. These secondary manufacturers generally each buy a relatively small number of engines and would therefore not necessarily be able to influence the marketing or sales practices of the engine selling the base engines. In this rulemaking, this is of particular concern for Large SI engine manufacturers subject to new standards in 2004. As a result, we are allowing secondary engine manufacturers to sell uncertified engines or engines certified at emission levels above the standard for a short period after emission standards begin to apply. However, these companies control the final design of the engines, so we would not approve any exemption unless the manufacturer committed to a plan to make up for any calculated loss in environmental benefit. For example, based on an alternate compliance level for 2004 model year engines, we could calculate the number of 2006 model year engines that would need to be certified early to the 2007 emission standards. Provisions similar to these were adopted for commercial marine diesel engines and will apply equally to recreational marine diesel engines. See the regulatory text in 40 CFR 1068.255 and 40 CFR 94.209 for additional information.

D. Imports (Part 1068, Subpart D)

In general, the same certification requirements apply to engines and equipment whether they are produced in the U.S. or are imported. This regulation also includes some additional provisions that apply if someone wants to import an exempted or excluded engine. For example, the importer needs appropriate documentation before importing nonconforming engines; this is true even if an exemption for the same reason doesn't require approval for engines produced in the U.S. These declaration forms are available on the Internet at *http://www.epa.gov/OMS/imports/* or by phone at 202–564–9660.

All the exemptions described above for new engines also apply to importation, though some of these apply only on a temporary basis. If we approve a temporary exemption, it is available

only for a defined period and could require the importer to post bond while the engine is in the U.S. There are several additional exemptions that apply only to imported engines.

—*Identical configuration:* This is a permanent exemption to allow individuals to import engines that were designed and produced to meet applicable emission standards. These engines may not have the emission label only because they were not intended for sale in the United States. This exemption applies to all the engines covered by 40 CFR part 1068.

—*''Antique''* engines: We generally treat used engines as new if they are imported without a certificate of conformity. However, this permanent exemption allows for importation of uncertified engines if they are more than 20 years old and still in their original configuration.

—*Repairs or alterations:* This is a temporary exemption to allow companies to repair or modify engines. This exemption does not allow for operating the engine, except as needed to do the intended work.

—*Diplomatic or military:* This is a temporary exemption to allow diplomatic or military personnel to use uncertified engines during their term of service in the U.S.

—*Engines subject to other programs:* This is a temporary exemption that allows someone to import an uncertified engine that will be converted for use in a different application. For example, someone may want to import a land-based nonroad engine to modify it and eventually sell it as a marine engine. This exemption expires when the engine modifications are complete, since one of the following scenarios will apply (1) the company modifying the engine will modify the engine to meet emission standards that apply to the modified engine, (2) the company will have a valid exemption under the program that applies to the modified engine, or (3) the modified engine will not be subject to emission standards, in which case an exemption is no longer necessary.

E. Selective Enforcement Audit (Part 1068, Subpart E)

Clean Air Act section 206(b) gives us the discretion in any program with vehicle or engine emission standards to do selective enforcement auditing of production engines. In selective enforcement auditing, we choose an engine family and give the manufacturer a test order detailing a testing program to show that production-line engines meet emission standards. The regulation text describes the audit procedures in greater detail.

We intend generally to rely on manufacturers' testing of production-line engines to show that their production process is producing engines in compliance they comply with emission standards. However, we reserve our right to do selective enforcement auditing if, for example, we have reason to question the emission testing conducted and reported by the manufacturer.

F. Defect Reporting and Recall (Part 1068, Subpart F)

In Part 1068, Subpart F, we are adopting defect reporting requirements that obligate manufacturers to tell us when they learn that emission control systems are defective and to conduct investigations under certain circumstances to determine if an emission-related defect is present. We are also requiring that manufacturers use warranty information, parts shipments, and any other information which may be available to trigger these investigations. For the purpose of this subpart, we are considering defective any part or system that does not function as originally designed for the regulatory useful life of the engine or the scheduled replacement interval specified in the manufacturer's maintenance instructions. For recreational vehicles and nonroad spark-ignition engines over 19 kW, this approach to defect reporting takes into account the varying sales volumes of the different products.

We believe the investigation requirement in this rule will allow both EPA and the engine manufacturers to fully understand the significance of any unusually high rates of warranty claims and parts replacement for systems or parts that may have an impact on emissions. We believe that any prudent and responsible engine manufacturer would, and should, conduct a thorough investigation as part of its normal product quality practices when in possession of data indicating an usually high number of recurring parts failures.

In the past, defect reports were submitted based on a very low threshold with the same threshold applicable to all size engine families and with little information about the full extent of the problem. The new approach should result in fewer overall defect reports being submitted by manufacturers than would otherwise be required under the old defect reporting requirements because the number of defects triggering the submission requirement rises with the engine family size.

The defect reporting requirements under other vehicle and engine regulations do not explicitly require investigations or reporting based on information available to the manufacturer about warranty claims or parts shipments. Such information is valuable and readily available to most manufacturers and should be considered when determining whether or not there is a defect of an emission-related part.

We are aware that counting warranty claims and part shipments will likely include many claims that are not emission-related or that do not represent defects, so we are establishing a relatively high threshold for triggering the manufacturer's responsibility to investigate whether there is in fact a real occurrence of an emission-related defect. Manufacturers are not required to count towards the investigation threshold any replacement parts they require to be replaced during the useful life, as specified in the application for certification and maintenance instructions to the owner, because such part shipments clearly do not represent defects.

Subpart F is intended to require manufacturers to use information we would expect them to keep in the normal course of business. We believe in most cases manufacturers will not be required to institute new programs or activities to monitor product quality or performance. A manufacturer that does not keep warranty or replacement part information may ask for our approval to use an alternate defect-reporting methodology that is at least as effective in identifying and tracking potential emissions related defects as the requirements of subpart F. However, until we approve such a request, the thresholds and procedures of subpart F continue to apply.

For engines with rated power below 560 kW, the investigation thresholds in 40 CFR 1068.501 are 4 percent of total production, or 4,000 engines, whichever is less, for any single engine family in one model year. The thresholds are reduced by 50 percent for defects related to aftertreatment devices, because these components typically play such a significant role in controlling engine emissions. For example, for an engine family with a sales volume of 20,000 units in a given model year, the manufacturer must investigate for emission-related defects if there were warranty claims for replacing electronic control units in 800 or more engines or catalytic converters on 400 or more engines. For a family with sales volume of 200,000 units in a given model year, the manufacturer

must investigate for emission-related defects if there were warranty claims for replacing electronic control units in 4,000 or more engines or catalytic converters on 2,000 or more engines.

For engines rated above 560 kW, each engine emits much greater levels of emissions, both because of the higher power rating and the fact that these engines generally operate at high load and for long periods. In addition, the engine family for such engines are typically of smaller volume compared to the lower power engines. We are therefore adopting a requirement that manufacturers investigate defects for these engines if they learn of 5 or more defects that may be emission-related, or 1 percent of total production, whichever is greater.

The second threshold in 40 CFR 1068.501 specifies when a manufacturer must report that there is an emission-related defect. This threshold involves a smaller number of engines because each possible occurrence has been screened to confirm that it is an emission-related defect. In counting engines to compare with the defect-reporting threshold, the manufacturer must consider a single engine family and model year. However, when a defect report is required, the manufacturer must report all occurrences of the same defect in all engine families and all model years. For engines with rated power below 560 kW, the threshold for reporting a defect is 0.25 percent of total production for any single engine family, or 250 defects, whichever is less. The thresholds are reduced 50 percent for reporting defects related to aftertreatment devices. For engines with rated power greater than 560kW, the threshold for reporting defects is 0.5 percent of total production, or 2 engines, whichever is greater.

If the number of engines with a specific defect is found to be less than the threshold for submitting a defect report, but information, such as warranty or parts shipment data, later indicates that there may be additional defective engines, all the information must be considered in determining whether the threshold for submitting a defect report has been met. If a manufacturer has actual knowledge from any source that the threshold for submitting a defect report has been met, a defect report must be submitted even if the trigger for investigating has not yet been met. For example, if manufacturers receive from their dealers, technical staff or other field personnel information showing conclusively that there is a recurring emission-related defect, they must submit a defect report.

At specified times the manufacturer must also report the open investigations as well as recently closed investigations that did not require a defect report. One manufacturer indicated that investigations of potential defects can sometimes take a long time. We agree and, therefore, are not specifying a time limit for manufacturers to complete their investigations. The periodic reports required by the regulations, however, will allow us to monitor these investigations and determine if it is necessary or appropriate for us to take further action.

In general, we believe this updated approach to defect reporting will decrease the number of defect reports submitted by manufacturers overall while significantly improving their quality and their value to both EPA and the manufacturer.

We are adopting the defect-reporting requirements for recreational marine diesel engines that already apply to Category 1 commercial marine diesel engines (40 CFR 94.403). In general, this requires the manufacturer to report to us if they learn that 25 or more models have a specific defect, without considering what percentage of the total engines that represents. This applies to the occurrence of the same defect and is not constrained by engine family or model year. We believe it would not be appropriate to have different defect-reporting requirements for different types of marine diesel engines, so we are not adopting the defect-reporting provisions described above for recreational marine diesel engines at this time. In the future we may consider whether the defect-reporting methodology described above should apply to recreational and commercial marine diesel engines.

Under Clean Air Act section 207, if we determine that a substantial number of engines within an engine family, though properly used and maintained, do not conform to the appropriate emission standards, the manufacturer will be required to conduct a recall of the noncomplying engine family to remedy the problem. However, we also recognize the practical difficulty in implementing an effective recall program for nonroad engines. It may be difficult to properly identify all the affected owners absent a nationwide registration requirement similar to that for cars and trucks. The response rate for affected owners or operators to an emission-related recall notice is also a critical issue to consider. We recognize that in some cases, recalling noncomplying nonroad engines may not achieve sufficient environmental protection, so our intent in such situations is generally to allow manufacturers to nominate alternative remedial measures to address most potential noncompliance situations. We expect that successful implementation of appropriate alternative remediation would obviate the need for us to make a determination of substantial nonconformity under section 207 of the Act. Alternatives nominated by a manufacturer will be evaluated based on the following criteria. The alternatives should—

(1) Represent a new initiative that the manufacturer was not otherwise planning to perform at that time, with a clear connection to the emission problem demonstrated by the engine family in question;

(2) Cost more than foregone compliance costs and consider the time value of the foregone compliance costs and the foregone environmental benefit of the engine family;

(3) Offset at least 100 percent of the emission exceedance relative to that required to meet emission standards (or Family Emission Limits); and

(4) Be possible to implement effectively and expeditiously and to complete in a reasonable time.

These criteria, and any other appropriate factors, will guide us in evaluating projects to determine whether their nature and burden is appropriate to remedy the environmental impact of the nonconformity.

G. Hearings (Part 1068, subpart G)

Manufacturers have the opportunity to challenge our decisions related to implementing this final rule. We are adopting hearing procedures consistent with those currently in place for highway engines and vehicles.

VIII. General Test Procedures

This rule establishes new engine testing regulations in 40 CFR part 1065. These regulations will apply to anyone who tests *engines* to show that they meet the emission standards for snowmobiles, ATV, motorcycles, or Large SI engines. This includes certification testing, as well as all production-line and in-use testing. See the program descriptions above for testing provisions that are unique to different engine categories. The regulatory text in 40 CFR part 1065 is written recognizing that we may someday apply these procedures more broadly to other EPA engine testing programs. If we decide to apply these provisions to other engines in future rulemaking, we would incorporate necessary additions or changes at that time. Recreational marine diesel engines

must be tested using the procedures already adopted in 40 CFR part 94.

A. General Provisions

As we have done in previous programs, we are adopting specific test procedures to define how to measure emissions, but allow alternate procedures if they are shown to be equivalent to our specified procedures. The test procedures in 40 CFR part 1065 are derived from our test procedures in 40 CFR part 86 for highway heavy-duty gasoline engines and light-duty vehicles. The procedures have been simplified (and to some extent generalized) to better fit nonroad engines.

B. Laboratory Testing Equipment

The regulations do not specify the type of engine or chassis dynamometer to use during testing. Rather, they include performance criteria that must be met during each test. These criteria are intended to ensure that deviations from the specified speed and load duty cycle are small.

Measuring emissions during transient operation calls for a greater degree of sophistication than steady-state testing. For chassis testing of recreational vehicles, we are adopting the specifications established in 40 CFR part 86 for highway engines. For Large SI engines, we based the dynamometer specifications around the capabilities of current dynamometers with enhanced control capabilities. While EPA confirmatory testing with transient duty cycles must meet the prescribed specifications, manufacturers may ask for approval to run tests with relaxed requirements for following the trace of the transient duty cycle. Manufacturers would have an incentive to accurately reproduce the test cycle to ensure compliance with emission standards, but would be able to use otherwise invalidated tests if the degree of variance from the test cycle does not call into question the engine's reported emission levels.

In addition, for transient testing with recreational vehicles and any testing with Large SI engines, the regulations specify that emissions must be measured using a full-dilution constant-volume sampler (CVS) like those used to measure emissions from highway engines. This means that during a test, an engine's exhaust is routed into a dilution tunnel where it is mixed with air and then sampled using a bag sampler system. After the test, the concentrations of HC, CO, and NO_X in the bag is measured using conventional laboratory analyzers.

For Large SI engines and snowmobiles, the steady-state test procedures specify measuring emissions with dilute-sampling equipment. Some manufacturers have expressed a preference to continue with their established practice of using raw-sampling equipment and procedures. While we believe dilute-sampling is most appropriate for these engines, the provisions for alternate testing procedures may allow for raw-sampling measurements for steady-state testing. As specified in 40 CFR 1065.10(c)(3) of the regulations, we allow manufacturers to use alternate procedures shown to be equivalent to the specified procedures. We are also including an interim provision for snowmobiles to allow manufacturers to use the raw-sampling procedures in 40 CFR part 91 for a few years before they are required to show equivalence with the dilute-sampling procedures. This option will allow manufacturers to focus their engineering efforts on reducing emissions during the start of the program.

C. Laboratory Testing Procedures

The specific procedures for running emission tests are outlined briefly here, with a more detailed description of the most significant aspects. Before testing the engine, it is necessary to operate it enough to stabilize emission levels or to make it more representative of in-use engines. This is called service accumulation and may take one of two forms. In the first method, a new engine is operated for up to 50 hours as a break-in period. This is done for most or all emission-data engines. The second method is much longer, up to the full useful life, and is done to determine deterioration factors.

Once an engine is ready for testing, it is connected to the dynamometer with its exhaust flowing into the dilution tunnel. The dynamometer is controlled to make the engine follow the specified duty cycle. A continuous sample is collected from the dilution tunnel for each test segment or test mode using sample bags. These bags are then analyzed to determine the concentrations of HC, CO, and NO_X.

1. Test Speeds

The definition of maximum test speed, where speed is the angular velocity of an engine's crankshaft (usually expressed in revolutions per minute, or rpm), is an important aspect of most duty cycles. Until recently, we relied on engine manufacturers to declare reasonable rated speeds for their engines and then used the rated speed as the maximum test speed. However, to have a more objective measure of an engine's maximum test speed, we have established a specific procedure for measuring this engine parameter.[86]

We define the maximum test speed for any engine to be the single point on an engine's maximum-power versus speed curve that lies farthest away from the zero-power, zero-speed point on a normalized maximum-power versus speed plot. In other words, consider straight lines drawn between the origin (speed = 0, load = 0) and each point on an engine's normalized maximum-power versus speed curve. Maximum test speed is defined at that point where the length of this line reaches its maximum value. For constant-speed engines, maximum test speed is the engine's rated speed.

Intermediate speed for steady-state duty cycles is defined as the speed at which the engine generates its maximum torque value. However, in cases where the maximum torque occurs at a speed that is less than 60 percent or greater than 75 percent of the rated speed, the intermediate speed is often specified as either 60 or 75 percent of rated speed, whichever is closer to the speed of maximum torque. The maximum test speed described above is used to calculate these percentage values relative to rated speed.

2. Maintenance

As described in Section II.C.1, we are limiting the amount of scheduled maintenance manufacturers may prescribe for their customers to ensure that engines continue to meet emission standards. If manufacturers specify unreasonably frequent maintenance, there would be little assurance that in-use engines would continue to operate at certified emission levels. We also apply these minimum maintenance intervals to engines the manufacturer operates for service accumulation before testing for emissions. For example, manufacturers may not install a new catalyst on a Large SI engine after 2,000 hours of operation, then select that engine for the in-use testing program. Similarly, manufacturers may not replace fuel-system components on a recreational vehicle during the course of service accumulation for establishing deterioration factors. We do not restrict scheduling of routine maintenance items, such as changing engine oil and replacing oil, fuel, or air filters. We may also allow changing spark plugs, even though we are aware that spark plugs may affect emissions.

[86] See the final rule for commercial marine diesel engines for a broader discussion of maximum test speed (64 FR 73300, December 29, 1999).

D. Other Testing Procedures

As noted in earlier sections, we are establishing some special test procedures for field testing situations. These special procedures are designed to apply to specific types of engines, and thus do not apply generally to all engines covered by this rulemaking. You should read the specific applicable section to determine if such special test procedures apply to any specific category of engines or vehicles.

IX. Projected Impacts

This section summarizes the projected impacts of the emission standards. The anticipated reduction in emissions is compared with the projected cost of the program for an assessment of the cost per ton of reducing emissions for this rule. The section includes the results of the analysis for the Final Program. We have also analyzed the impacts of different alternatives for each of the program areas. This analysis of alternatives, for the most part, focused on more or less stringent alternative standards. For recreational marine diesels, the alternatives analyzed were applying draft European standards or implementing our primary program two years earlier. For the Large SI category, the alternative focused on adopting a steady-state only 2007 requirement. For off-highway motorcycles, we analyzed a more-stringent 1.0 g/km standard and a less-stringent 4.0 g/km standard for HC + NO_X control. With ATVs, the alternatives presented were a 2.0 g/km and a 1.0 g/km HC + NO_X standard. For snowmobiles, we analyzed four alternatives, ranging from only adopting one phase of standards in 2006 to a standard that would require, on average, reductions of 85% HC and 50% CO from baseline emissions. Additional detailed discussion on these alternatives and the results of the alternatives analysis are presented in Chapter 11 of the RSD.

A. Environmental Impact

To estimate nonroad engine and vehicle emission contributions, we used the latest version of our NONROAD emissions model. This model computes emission levels for a wide variety of nonroad engines, and uses information on emission rates, operating data, and population to determine annual emission levels of various pollutants. A more detailed description of the methodology used for projecting inventories and projections for additional years can be found in the Chapter 6 of the Final Regulatory Support Document.

Tables IX.A–1 and IX.A–2 contain the projected emission inventories for calendar year 2010 from the engines and vehicles subject to this rulemaking under the base case (*i.e.*, without the standards taking effect) and assuming the standards take effect. Tables IX.A–3 and IX.A–4 contain the projected emission inventories for calendar year 2020. The percent reductions based on a comparison of estimated emission inventories with and without the emission standards are also presented in each of the tables.

TABLE IX.A–1.—2010 PROJECTED HC AND NO_X EMISSIONS INVENTORIES

[Thousand short tons]

Category	HC*			NO_X		
	Base case	With standards	Percent reduction	Base case	With standards	Percent reduction
Large SI	268	88	67	389	118	70
Snowmobiles	297	250	16	3	4	(16)
ATVs	308	211	31	7	6	11
Off-highway motorcycles	193	155	20	1.1	1.2	(8)
Recreational marine diesel	1.6	1.5	10	49	46	7
Total	1,066	705	34	450	174	61

*The estimate for Large SI includes both exhaust HC and evaporative HC emissions. The estimates for snowmobiles, ATVs and Off-highway motorcycles includes both exhaust HC and permeation HC emissions. The estimate for recreation marine diesel includes exhaust HC emissions.

TABLE IX.A–2.—2010 PROJECTED CO AND PM EMISSIONS INVENTORIES

[Thousand short tons]

Category	CO			PM		
	Base case	With standards	Percent reduction	Base case	With standards	Percent reduction
Large SI	2,022	945	53	1.9	1.9	0
Snowmobiles	775	670	14	7.0	6.7	4
ATVs	1,042	989	5	10.8	7.4	32
Recreational marine diesel	8	8	0	1.3	1.2	6
Off-highway motorcycles	266	239	10	7.3	5.8	20
Total	4,113	2,851	31	28.3	23.0	19

TABLE IX.A–3.—2020 HC AND NO_X PROJECTED EMISSIONS INVENTORIES

[Thousand short tons]

Category	HC*			NO_X		
	Base case	With standards	Percent reduction	Base case	With standards	Percent reduction
Large SI	318	34	89	472	43	91

TABLE IX.A–3.—2020 HC AND NO_X PROJECTED EMISSIONS INVENTORIES—Continued

[Thousand short tons]

Category	HC*			NO_X		
	Base case	With standards	Percent reduction	Base case	With standards	Percent reduction
Snowmobiles	358	149	58	5	10	(101)
ATVs	374	53	86	8	6	25
Off-highway motorcycles	232	117	50	1.3	1.5	(19)
Recreational marine diesel	2.0	1.5	28	61	48	21
Total	1,284	355	72	547	109	80

*The estimate for Large SI includes both exhaust HC and evaporative HC emissions. The estimates for snowmobiles, ATVs and Off-highway motorcycles includes both exhaust HC and permeation HC emissions. The estimate for recreation marine diesel includes exhaust HC emissions.

TABLE IX.A–4.—2020 PROJECTED CO AND PM EMISSIONS INVENTORIES

[Thousand short tons]

Category	CO			PM		Percent reduction
	Base case	With standards	Percent reduction	Base case	With standards	
Large SI	2,336	277	88	2.3	2.3	0
Snowmobiles	950	508	46	8.4	4.9	42
ATVs	1,250	1,085	13	13.1	1.9	86
Off-highway motorcycles	321	236	26	8.7	4.4	50
Recreational Marine diesel	9	9	0	1.6	1.3	18
Total	4,866	2,115	56	34.2	14.8	57

As described in Section I, we project there will also be environmental benefits associated with reduced haze in many sensitive areas.

Finally, anticipated reductions in hydrocarbon emissions correspond with reduced emissions of the toxic air emissions referenced in Section I.

B. Cost Estimates

In assessing the economic impact of setting emission standards, we have made a best estimate of the necessary technologies and their associated costs. In making our estimates we have relied on our own technology assessment, which includes information supplied by individual manufacturers and our own in-house testing. Estimated costs include variable costs (for hardware and assembly time) and fixed costs (for research and development, retooling, and certification). The analysis also considers total operating costs, including maintenance and fuel consumption. Cost estimates based on the projected technologies represent an expected change in the cost of engines as they begin to comply with new emission standards. All costs are presented in 2001 dollars. Full details of our cost analysis can be found in Chapter 5 of the Final Regulatory Support Document.

Cost estimates based on the current projected costs for our estimated technology packages represent an expected incremental cost of vehicles in the near term. For the longer term, we have identified factors that will cause cost impacts to decrease over time. First, we project that manufacturers will generally recover their fixed costs over a five-year period, so these costs disappear from the analysis after the fifth year of production. Second, the analysis incorporates the expectation that manufacturers and suppliers will apply ongoing research and manufacturing innovation to making emission controls more effective and less costly over time. Research in the costs of manufacturing unrelated to emissions control technologies has consistently shown that as manufacturers gain experience in production and use, they are able to apply innovations to simplify machining and assembly operations, use lower cost materials, and reduce the number or complexity of component parts (see the Final Regulatory Support Document for additional information).[87] The cost analysis assumes this learning effect applies equally well to the adoption of the technologies associated with this rule by decreasing estimated variable costs by 20 percent starting in the third year of production and an additional 20 percent starting in the sixth year of production.

Table IX.B–1 summarizes the projected near-term per unit average costs to meet the new emission standards. These estimates are based on the manufacturing cost rather than predicting price increase; the costs nevertheless take into account anticipated mark-ups to present retail-price equivalent figures. Long-term impacts on engine costs are expected to decrease as manufacturers fully amortize their fixed costs and learn to optimize their designs and production processes to meet the standards more efficiently. The tables also show our projections of reduced operating costs for some engines (calculated on a net present value basis), which generally results from substantial reductions in fuel consumption.

[87] For further information on learning curves, see Chapter 5 of the Economic Impact, from Regulatory Impact Analysis-Control if Air Pollution from New Motor Vehicles: Tier 2 Motor Vehicle Emission Standards and Gasoline Sulfur Control Requirements, EPA420-R–99–023, December 1999. A copy of this document is included in Air Docket A–2000–01, at Document No. II-A–83. The interested reader should also refer to previous final rules for Tier 2 highway vehicles (65 FR 6698, February 10, 2000), marine diesel engines (64 FR 73300, December 29, 1999), nonroad diesel engines (63 FR 56968, October 23, 1998), and highway diesel engines (62 FR 54694, October 21, 1997).

TABLE IX.B–1.—ESTIMATED AVERAGE COST IMPACTS OF EMISSION STANDARDS

Standards	Dates	Increased production cost per vehicle*	Lifetime operating costs per vehicle (NPV)
Large SI exhaust	2004	$611	$−3,981
Large SI exhaust	2007	55	0
Large SI evaporative	2007	13	−56
Snowmobile exhaust (Phase 1)	2006	73	−57
Snowmobile exhaust (Phase 2)	2010	131	−286
Snowmobile exhaust (Phase 3)	2012	89	−191
Snowmobile permeation	2008	7	−11
ATV exhaust	2006	84	−24
ATV permeation	2008	3	−6
Off-highway motorcycle exhaust	2006	155	−48
Off-highway motorcycle peermeation	2008	3	−5
Recreational	2006	346	0

*These estimates are for near-term costs. The estimated long-term costs decrease by about 35 percent. Costs presented for the Large SI and snowmobile second-phase standards are incremental to the first-phase standards. Costs for Phase 3 are incremental to Phase 2. These costs numbers may not necessarily reflect actual price increases as manufacturer production costs, perceived product enhancements, and other market impacts will affect actual prices to consumers.

We estimate that the anticipated increase in the near-term cost of producing new Large SI engines for the 2004 standards is estimated to range from $550 to $800, depending on fuel type, with a composite estimated cost of $605. This cost is attributed to upgrading engines to operate with closed-loop fuel systems and three-way catalysts. These technologies also improve the overall performance of these engines, including improvements to fuel economy that result in reduced operating costs that fully offset the additional hardware cost. We further estimate additional costs of $50 for the 2007 standards, which primarily involve additional development time to optimize engines using the same closed-loop systems with three-way catalysts. While these costs are a small percentage of the cost of industrial equipment, we are aware that this may not be insignificant in this very competitive market. Given the compelling advantages of improved performance and reduced operating expenses, however, we believe manufacturers will generally be able to recover their costs over time.[88]

Projected average near-term costs for ATVs and off-highway motorcycles are $84 and $155 per unit, respectively. Standards are based on the emission-control capability of engines four-stroke engines.[89] Those models that convert from two-stroke to four-stroke technology will see substantial fuel savings in addition to greatly reduced emissions. With an averaging program that allows manufacturers to apply varying degrees of technology to different models, we believe they will be able to tailor emission controls in a way that reflects the performance needs for their products. Fuel savings associated with replacing two-stroke engines with four-stroke engines partially offsets the additional cost of producing these vehicles.

We expect that the near-term cost of the 2006 snowmobile standards will average $73 per snowmobile. These costs are based on a mix of technologies including a small increase in the use of four-stroke and direct injection technology. For other engines we expect manufacturers to lean out the air-fuel mixture, improve carburetion for better fuel control and less production variation, and modify the engine to withstand higher temperatures and potential misfire episodes attributed to enleanment. We expect that the 2010 and 2012 standards will be met through inceasing the application of direct injection two-stroke technology and four-stroke engines on a significant portion of the fleet. We project that the near-term incremental cost of the Phase 2 standards will average $131 per snowmobile and Phase 3 will be $89, although we believe these costs will be fully offset by fuel savings.

Recreational marine diesel engines are expected to see increased costs averaging under $400 per engine in the near-term. We expect manufacturers to meet emission standards by improving fuel injection systems and making general design changes to the geometries, configurations, and calibrations of their engines. These figures are somewhat lower than we have projected for the comparable commercial marine engines, since the recreational models generally already have some of the emission-control technologies needed to meet the emission standards.

The above analysis presents unit cost estimates for each type of engine or vehicle. These costs represent the total set of costs the engine or vehicle manufacturers will bear to comply with emission standards. For those categories with engine-based standards, we do not anticipate significant new costs for equipment manufacturers installing certified engines. Operating costs are also taken into account, but where there is an effect, we project these impacts to involve only cost savings for operators. With current and projected estimates of engine and equipment sales, we translate these costs into projected direct costs to the nation for the new emission standards in any year. A summary of the annualized costs to manufacturers by equipment type is presented in Table IX.B–2. (The annualized costs are determined over the first twenty years that the standards will be in effect. Because the standards take effect in different years for the various categories of equipment covered by this rule, the aggregate annualized cost is calculated over a slightly longer period of time encompassing the first twenty years of each of the standards. For this reason, the aggregate annualized cost is not the sum of the individual annualized costs.) The annual cost savings due to reduced operating expenses start slowly, then increase as greater numbers of

[88] Chapter 5 of the Final Regulatory Support Document describes why we believe market forces haven't already led manufacturers to add fuel-saving technologies to their products.

[89] The program contains an optional set of standards for off-highway motorcycles which could result in the use of direct injection two-stroke technology in some high-performance applications. Chapter 11.3 provides a cost analysis for this option. The costs are projected to be somewhat higher for this option due to the application of technology to high-performance competition models.

compliant engines enter the fleet. Table IX.B–2 also presents a summary of the annualized reduction in operating costs. Overall, based on currently available information, we project an annualized net savings to the economy of approximately $200 million per year.

TABLE IX.B–2—ESTIMATED ANNUAL COST TO MANUFACTURERS AND ANNUAL SAVINGS FROM REDUCED OPERATING COSTS OF EMISSION STANDARDS

Engine type	Annualized cost to manufacturers (millions/year)	Annualized savings from reduced operating costs (millions/year)
Large SI	$84	$324
Snowmobiles	36	47
ATVs	61	31
Off-highway motorcycles	25	14
Marine Diesel	7	0
Aggregate*	192	410

*Because the standards take effect in different years for the various categories of equipment, the aggregate annualized cost is calculated over a slightly longer period of time. For this reason, the aggregate annualized cost is not the sum of the individual annualized costs.

C. Cost Per Ton of Emissions Reduced

We calculated the cost per ton of emission reductions for the emission standards. For snowmobiles, this calculation is on the basis of HC and CO emissions. For all other engines, we attributed the entire cost of the program to the control of ozone precursor emissions (HC or NO_X or both).

Table IX.C–1 presents the near-term discounted cost-per-ton estimates for the various engines covered by the rule. (The aggregate cost-per-ton estimates are over the first 20 years of emission standards.) Reduced operating costs more than offset the increased cost of producing the cleaner engines for Phase 1 Large SI, and Phase 2 and Phase 3 snowmobile engines. The cost to society and the associated cost-per-ton figures for these engines, and the aggregate values for all engines covered by this rule, therefore show a net savings resulting from the emission standards. The table presents these as $0 per ton, rather than calculating a negative value that has no clear meaning.

TABLE IX.C–1.—ESTIMATED COST-PER-TON OF EMISSION STANDARDS

Standards	Dates	Discounted reductions per vehicle (short tons)*	Discounted cost per ton of HC+NO_X		Discounted cost per ton of CO	
			Without fuel savings	With fuel savings	Without fuel savings	With fuel savings
Large SI exhaust (Composite of all fuels)	2004	3.07	$240	$0	—	—
Large SI exhaust (Composite of all fuels)	2007	0.80	80	80	—	
Large SI evaporative	2007	0.13	80	0	—	
Snowmobile exhaust	2006	HC: 0.40 CO: 1.02	90	20	$40	$10
Snowmobile exhaust	2010	HC: 0.10	1,370	0	—	—
Snowmobile exhaust	2012	CO: 0.25	—	—	360	0
Snowmobile permeation	2008	0.03	210	0	—	—
ATV exhaust	2006	0.21	400	290	—	—
ATV permeation	2008	0.02	180	0	—	—
Off-highway motorcycle exhaust	2006	0.38	410	280	—	—
Off-highway motorcycle permeation	2008	0.01	230	0	—	—
Recreational marine diesel	2006	0.44	670	670	—	—
Aggregate	—	—	240	0	80	0

*HC reductions for evaporative and permeation, and HC+NO_X reductions for exhaust (except snowmobiles where CO reductions are also presented).

D. Economic Impact Analysis

We performed an analysis to estimate the economic impacts of this final rule on producers and consumers of recreational marine diesel vessels (specifically, diesel inboard cruisers), forklifts, snowmobiles, ATVs, off-highway motorcycles, and society as a whole. This economic impact analysis focuses on market-level changes in price, quantity, and economic welfare (social gains or costs) associated with the regulation. A description of the methodology used can be found in Chapter 9 of the Final Regulatory Support Document prepared for this rulemaking.

We did not perform an economic impact analysis for categories of Large SI nonroad engines other than forklifts, even though those other Large SI engines are also subject to the standards contained in this final rule. As explained in more detail in Chapter 9 of the Final Regulatory Support Document, this was due to the large number of different types of equipment that use Large SI engines and data availability constraints for those market segments. For the sake of completeness, the following analysis reports separate estimates for Large SI engines other than forklifts. Engineering costs are assumed

to be equal to economic costs for those engines. This approach slightly overestimates the social costs associated with the relevant standards.

Based on the estimated regulatory costs associated with this rule and the predicted changes in prices and quantity produced in the affected industries, the total estimated annual social gains of the rule in the year 2030 is projected to be $553.5 million (in 2000 and 2001 dollars). The net present value of the social gains for the 2002 to 2030 time frame is equal to $4.9 billion, using a 3% discount rate. This value would be $2.4 billion with a 7% discount rate. The social gains are equal to the fuel savings minus the combined loss in consumer and producer surplus (see Table IX.D–1), taking into account producers' and consumers' changes in behavior resulting from the costs associated with the rule.[90] Social gains do not account for the social benefits (the monetized health and environmental effects of the rule).

TABLE IX.D–1.—SURPLUS LOSSES, FUEL EFFICIENCY GAINS, AND SOCIAL GAINS/COSTS IN 2030 [a]

Vehicle category	Surplus losses in 2030 ($ millions)	Fuel efficiency gains in 2030 ($ millions)	Social gains/ costs in 2030 [b] ($ millions)
Recreational marine diesel vessels	$6.6	$0	($6.6)
Forklifts	47.8	420.1	372.3
Other Large SI	[c] 48.1	138.4	90.3
Snowmobiles	41.9	135.0	93.1
ATVs	47.2	51.4	4.2
Off-highway motorcycles	25.0	25.2	0.2
All vehicles total	216.6	770.1	553.5
NPV of all vehicles total [d]	3,231.4	8,130.3	4,898.9
NPV of all vehicles total [e]	1,889.5	4,282.3	2,392.8

[a] Figures are in 2000 and 2001 dollars.
[b] Figures in this column exclude estimated social benefits. Numbers in parentheses denote social costs.
[c] Figure is engineering costs; see text for explanation.
[d] Net Present Value is calculated over the 2002 to 2030 time frame using a 3 percent discount rate.
[e] Net Present Value is calculated over the 2002 to 2030 time frame using a 7 percent discount rate.

For most of the engine categories contained in this rule, we expect there will be a fuel savings as manufacturers redesign their engines to comply with emission standards. For ATVs and off-highway motorcycles, the fuel savings will be realized as manufacturers switch from two-stroke to four-stroke technologies. For snowmobiles, the fuel savings will be realized as manufacturers switch some of their engines to more fuel efficient two-stroke technologies and some of their engines to four-stroke technologies. For Large SI engines, the fuel savings will be realized as manufacturers adopt more sophisticated and more efficient fuel systems; this is true for all fuels used by Large SI engines. Overall, we project the fuel savings associated with the anticipated changes in technology to be about 800 million gallons per year once the program is fully phased in. These savings are factored into the calculated costs and costs per ton of reduced emissions, as described above.

E. Do the Benefits Outweigh the Costs of the Standards?

While EPA uses relative cost-effectiveness as the primary manner to take costs into consideration, further insight regarding the standards can be provided by benefit-cost analysis. The purpose of this section is to summarize the methods we used and results we obtained in conducting an analysis of the economic benefits of the changes in emissions from engines covered by this rule, and to compare these economic benefits with the estimated economic costs of the rule. In summary, the results of our analysis indicate that the economic benefits of the final standards will exceed the costs of meeting the standards. The annual estimated benefits we were able to quantify were approximately $10 billion in 2030.

1. What Was Our Overall Approach to the Benefit-Cost Analysis?

The basic question we sought to answer in the benefit-cost analysis was, ''What are the net yearly economic benefits to society of the reduction in mobile source emissions likely to be achieved by this final rulemaking?'' In designing an analysis to address this question, we selected a future year for analysis (2030) that is representative of full-implementation of the program (*i.e.*, when the Large SI and recreational vehicle fleet is composed of virtually only compliant vehicles).

To quantify benefits, we evaluated PM-related health effects (including directly emitted PM and NO_X contribution to particulate nitrate) using a benefits transfer technique. Although we expect economic benefits to exist, we were unable to quantify or to value specific changes in visibility, ozone, CO or air toxics because we did not perform additional air quality modeling.

To evaluate the PM-related health effects, we adopted a benefits transfer technique that relies on the extensive particulate matter air quality and benefits modeling conducted for the highway Heavy Duty Engine/Diesel Fuel final rule.[91] That RIA used an analytical structure and sequence similar to that used in the ''section 812 studies'' to estimate the total benefits and costs of the full Clean Air Act.[92] In the HD

[90] Consumer and producer surplus losses are measures of the economic welfare loss consumers and producers, respectively are likely to experience as a result of the regulations. Combined these losses represent an estimate of the economic or social costs of the rule. Note that for the Large SI and recreational vehicle rules, fuel efficiency gains must be netted from surplus losses to estimate the social costs or social gains (in cases where fuel efficiency gains exceed surplus losses) attributable to the rules.

[91] Regulatory Impact Analysis: Heavy-Duty Engine and Vehicle Standards and Highway Diesel Fuel Sulfur Control Requirements, document EPA420–R–00–026, December 2000. Docket No. A–2000–01, Document No. II–A–13. This document is also available at *http://www.epa.gov/otaq/diesel.htm#documents.* The transfer technique is described in a memorandum, Dr. Bryan Hubbell, Senior Economist, Estimated Nox, Sox, and PM Emissions Health Damages for Heavy Duty Vehicle Emissions, April 22, 2002. A copy of this letter can be found in Docket A–2000–01, Document IV–A–146.

[92] The section 812 studies include: (1) U.S. EPA, Report to Congress: The Benefits and Costs of the Clean Air Act, 1970 to 1990, October 1997 (also known as the ''Section 812 Retrospective Report'');

Engine/Diesel Fuel analysis, we used many of the same models and assumptions used in the section 812 studies as well as other Regulatory Impact Analyses (RIAs) prepared by the Office of Air and Radiation. By adopting the major design elements, models, and assumptions developed for the section 812 studies and other RIAs, we have largely relied on methods which have already received extensive review by the independent Science Advisory Board (SAB), by the public, and by other federal agencies. Although the underlying method has experienced significant review, the transfer of values from an existing primary benefits analysis to estimate the benefits of a new program has not had this type of review and the transfer technique introduces additional uncertainties.

2. What Are the Significant Limitations of the Benefit-Cost Analysis?

Every benefit-cost analysis examining the potential effects of a change in environmental protection requirements is limited to some extent by data gaps, limitations in model capabilities (such as geographic coverage), and uncertainties in the underlying scientific and economic studies used to configure the benefit and cost models. Deficiencies in the scientific literature often result in the inability to estimate quantitative changes in health and environmental effects, such as potential increases in premature mortality associated with increased exposure to carbon monoxide. Deficiencies in the economics literature often result in the inability to assign economic values even to those health and environmental outcomes which can be quantified. While these general uncertainties in the underlying scientific and economics literatures, which can cause the valuations to be higher or lower, are discussed in detail in the Final Regulatory Support Document and its supporting documents and references, the key uncertainties which have a bearing on the results of the benefit-cost analysis of this final rule include the following:

- The exclusion of potentially significant benefit categories (such as health and ecological benefits of reduction in hazardous air pollutants emissions and ozone; improvements in visibility);
- Errors in measurement and projection for variables such as population growth;
- Uncertainties in the estimation of future year emissions inventories and air quality;
- Uncertainties associated with the transfer of the results of the HD Engine/Diesel Fuel analysis to this program, especially regarding the assumption of similarity in geographic distribution between emissions and human populations and years of analysis;[93]
- Variability in the estimated relationships of health and welfare effects to changes in pollutant concentrations;
- Uncertainties in exposure estimation;
- Uncertainties in applying willingness to pay estimates from National Park and Forest visitors to U.S. recreational participants and uncertainties in average number of activity days per year; and
- Uncertainties associated with the effect of potential future actions to limit emissions.

Despite these uncertainties, we believe the benefit-cost analysis provides a reasonable indication of the expected economic benefits of the final rulemaking in future years under a set of assumptions.

One key area of uncertainty is the value of a statistical life (VSL) for reductions in mortality risk. The adoption of a value for the projected reduction in the risk of premature mortality is the subject of continuing discussion within the economic and public policy analysis community. In accordance with the independent Science Advisory Board advice,[94] we use the value of a statistical life (VSL) for risk reductions in mortality in our primary estimate. Alternative calculations of adjustment for age and other factors are presented in the RIA for the HD Engine/Diesel Fuel rule and in the RSD for this rule. The presentation of the other alternative calculations for certain endpoints seeks to demonstrate how much the overall benefit estimate might vary based on the value EPA has given to a parameter (which has uncertainty associated with it) underlying the estimates for human health and environmental effect incidence and the economic valuation of those effects. These alternative calculations represent conditions that might occur; however, EPA has selected the best values supported by current scientific literature for use in the primary estimate. The primary estimate is the source for our benefits transfer technique.

Even with our efforts to fully disclose the uncertainty in our estimate, our uncertainty presentation method does not provide a definitive or complete picture of the true range of monetized benefits estimates. The set of alternative calculations is only representative of those benefits that we were able to quantify and monetize.

3. What Are the benefits In the Years Leading Up to 2030?

The final rule has various cost and emission related components, as described earlier in this section. These components would begin at various times and in some cases would phase in over time. This means that during the early years of the program there would not be a consistent match between cost and benefits, especially where the full vehicle cost would be incurred at the time of vehicle purchase, while the fuel savings along with the emission reductions and benefits resulting from all these costs would occur throughout the lifetime of the vehicle. Because of this inconsistency and our desire to more appropriately match the costs and emission reductions of our program, our analysis uses a future year (2030) when the fleet is nearly fully turned over.

In the years before 2030, the benefits from the final rule will be less than those estimated here, because the compliant vehicle fleet will not be fully phased in, and the overall U.S. population would be smaller. Annualized costs, on the other hand, reach nearly their full value within a few years of program initiation (once all phase-ins are completed). Thus, a benefit-cost ratio computed for the earlier years of the program would be expected to be lower than a ratio based on our 2030 analysis when the fleet has fully turned over. The stream of costs and the limited set of quantified benefits over time are presented in the Final

and (2) the first in the ongoing series of prospective studies estimating the total costs and benefits of the Clean Air Act (see EPA report number: EPA–410–R–99–001, November 1999). See Docket A–99–06, Document II–A–21.

[93] In the original HD Engine/Diesel Fuel analysis, we modeled air quality and benefits in 2030. There are sufficient non-linearities and interactions among pollutants in the atmospheric chemistry that introduce additional uncertainties in the quantitative estimate of the benefits in years that were not fully modeled in the original analysis.

[94] SAB advised that the EPA ''continue to use a wage-risk-based VSL as its primary estimate, including appropriate sensitivity analyses to reflect the uncertainty of these estimates,'' and that ''the only risk characteristic for which adjustments to the VSL can be made is the timing of the risk'' (EPA-SAB-EEAC–00–013; a copy of this document can be found in Docket A–99–06, Document No. IV–A–19). In developing our primary estimate of the benefits of premature mortality reductions, we have appropriately discounted over the lag period between exposure and premature mortality. However, an empirical basis that meets the SAB's standards of reliability for adjusting the current $6 million VSL for many of these factors does not yet exist. A discussion of these factors is contained in the RIA and supporting documents. EPA recognizes the need for additional research by the scientific community to develop additional empirical support for adjustments to VSL for the factors mentioned above.

Regulatory Support Document. On the other hand, since the estimated benefits are more than 40 times the costs (excluding fuel savings) in 2030, the emission reduction and cost trends suggest that it is likely that annual benefits would exceed costs from a time early in the life of the program.

4. What Were the Results of the Benefit-Cost Analysis?

The benefit-cost analysis for the final rule reflects a single year picture of the yearly benefits and costs expected to be realized once the standards have been fully implemented and non-compliant vehicles have all been retired.

Table IX.E–1 presents EPA's primary estimate of the benefits of the rule, both the estimated reductions in incidences and the estimated economic value of those incidence reductions. In interpreting the results, it is important to keep in mind the limited set of effects we are able to monetize. Specifically, the table lists the avoided PM-related incidences of health effects and the estimated economic value of those avoided incidences.[95] We present estimates for the reductions for the Large SI category only. As the table indicates, we estimate that the final rule will reduce premature mortality associated with fine PM by around 1,000 incidences per year, produce about 600 fewer cases of chronic bronchitis, and result in significant reductions in minor restricted activity days (with an estimated 1 million fewer cases).[96]

TABLE IX.E–1.—EPA PRIMARY ESTIMATE OF THE ANNUAL QUANTIFIED AND MONETIZED BENEFITS ASSOCIATED WITH IMPROVED PM AIR QUALITY RESULTING FROM THE LARGE SI/RECREATIONAL VEHICLE RULE IN 2030 [a]

PM-related endpoint	Avoided incidence [a,c] (cases/year)	Monetary benefits [a,d] (millions 2002 $)
Premature mortality [a,b] (adults, ages 30 and over)	1,000	$7,510
Chronic bronchitis	640	$280
Hospital Admissions from Respiratory Causes [g]	300	<$10
Hospital Admissions from Cardiovascular Causes [g]	300	<$10
Emergency Room Visits for Asthma	300	<$1
Acute bronchitis (children, ages 8–12)	2,200	<$1
Upper respiratory symptoms (asthmatic children, ages 9–11)	20,600	<$1
Lower respiratory symptoms (children, ages 7–14)	23,700	<$1
Asthma attacks (asthmatics, all ages) [a]	20,600	<$1
Work loss days (adults, ages 18–65)	181,300	$20
Minor restricted activity days (adults, ages 18–65) (adjusted to exclude asthma attacks) [a]	944,400	$50
Other health effects [e]	$U_1+U_2+U_3+U_4$	$B_1+B_2+B_3+B_4$
Monetized Total [f]		$7,880 + B

[a] Ozone-related benefits are not included, thus underestimating national benefits. Relative to PM related benefits, ozone benefits have typically accounted for only a small portion of total benefits. However, ozone reductions can have a significant impact on asthma attacks in asthma sufferers, as well as contributing to reductions in the overall number of minor restricted activity days.

[b] The value we are transferring assumes that some of the incidences of premature mortality related to PM exposures occur in a distributed fashion over the five years following exposure, and it embeds an annual three percent discount rate to the value of premature mortality occurring in years after our analysis year.

[c] Incidences are rounded to the nearest 100.

[d] Dollar values are rounded to the nearest 10 million. Monetary benefits account for growth in real GDP per capita through 2030.

[e] The Ui are the incidences and the Bi are the values for the unquantified category i. A detailed listing of unquantified PM, ozone, CO, and HC related health and welfare effects is provided in Table IX–E.2. Many of the HC emitted from these vehicles are also hazardous air pollutants listed in the Clean Air Act.

[f] B is equal to the sum of all unmonetized categories, *i.e.*, Ba+B1+B2+ * * * +Bn.

[g] Based upon recent preliminary findings by the Health Effects Institute, the concentration-response functions used to estimate reductions in hospital admissions may over- or under-estimate the true concentration-response relationship.

Total monetized benefits are driven primarily by the reduction in premature fatalities each year, which account for over 80 percent of total benefits.

This table also indicates with a ''B'' those additional health and environmental benefits which could not be expressed in quantitative incidence and/or economic value terms. A full listing of the benefit categories that could not be quantified or monetized in our estimate are provided in Table IX.E–2. The final rule may also provide some visibility improvements in Class I areas and near where people live, work, and recreate. A full appreciation of the overall economic consequences of the final standards requires consideration of all benefits and costs expected to result from the new standards, not just those benefits and costs which could be expressed here in dollar terms.

TABLE IX.E–2.—ADDITIONAL, NON-MONETIZED BENEFITS OF THE LARGE SI/RECREATIONAL VEHICLE STANDARDS

Pollutant	Unquantified effects
Ozone Health	Premature mortality.[a] Increased airway responsiveness to stimuli. Inflammation in the lung. Chronic respiratory damage. Premature aging of the lungs.

[95] Based upon recent preliminary findings by the Health Effects Institute, the concentration-response functions used to estimate reductions in hospital admissions may over- or underestimate the true concentration-response relationship. See Letter from Dan Greenberg, President, Health Effects Institute, May 30, 2002, attached to letter from Dr. Hopke, dated August 8, 2002. Docket A–2000–01, Document IV–A–145.

[96] Our estimate also incorporates significant reductions in 27,000 fewer cases of lower respiratory symptoms, and 26,600 fewer cases of upper respiratory symptoms in asthmatic children each year. In addition, we estimate that this final rule will reduce 23,400 incidents of asthma attacks each year in asthmatics of all ages from reduced exposure to particles. Additional incidents would be avoided from reduced ozone exposures. Asthma is the most prevalent chronic disease among children and currently affects over seven percent of children under 18 years of age.

TABLE IX.E–2.—ADDITIONAL, NON-MONETIZED BENEFITS OF THE LARGE SI/RECREATIONAL VEHICLE STANDARDS—Continued

Pollutant	Unquantified effects
	Acute inflammation and respiratory cell damage.
	Increased susceptibility to respiratory infection.
	Non-asthma respiratory emergency room visits.
	Increased school absence rates
Ozone Welfare	Decreased yields for commercial forests (for example, Western US).
	Decreased yields for fruits and vegetables.
	Decreased yields for non-commercial crops.
	Damage to urban ornamental plants.
	Impacts on recreational demand from damaged forest aesthetics.
	Damage to ecosystem functions
PM Health	Infant mortality.
	Low birth weight.
	Changes in pulmonary function.
	Chronic respiratory diseases other than chronic bronchitis.
	Cardiac endpoints.
	Morphological changes.
	Altered host defense mechanisms.
	Cancer.
	Non-asthma respiratory emergency room visits
PM Welfare	Visibility in Class I areas.
	Residential and recreational visibility in non-Class I areas.
	Soiling and materials damage.
	Damage to ecosystem functions
Nitrogen and Sulfate Deposition Welfare.	Impacts of acidic sulfate and nitrate deposition on commercial forests
	Impacts of acidic deposition to commercial freshwater fishing.
	Impacts of acidic deposition to recreation in terrestrial ecosystems.
	Reduced existence values for currently healthy ecosystems.
	Impacts of nitrogen deposition on commercial fishing, agriculture, and forests.
	Impacts of nitrogen deposition on recreation in estuarine ecosystems.
	Damage to ecosystem functions
CO Health	Premature mortalitya.
	Behavioral effects.
	Hospital admissions—respiratory, cardiovascular, and other.
	Other cardiovascular effects
	Developmental effects.
	Decreased time to onset of angina.
	Non-asthma respiratory ER visits
HC Health[b]	Cancer (benzene, 1,3-butadiene, formaldehyde, acetaldehyde).
	Anemia (benzene).
	Disruption of production of blood components (benzene).
	Reduction in the number of blood platelets (benzene).
	Excessive bone marrow formation (benzene).
	Depression of lymphocyte counts (benzene)
	Reproductive and developmental effects (1,3-butadiene).
	Irritation of eyes and mucus membranes (formaldehyde).
	Respiratory irritation (formaldehyde).
	Asthma attacks in asthmatics (formaldehyde).
	Asthma-like symptoms in non-asthmatics (formaldehyde).
	Irritation of the eyes, skin, and respiratory tract (acetaldehyde).
	Upper respiratory tract irritation and congestion (acrolein)
HC Welfare	Direct toxic effects to animals.
	Bioaccumulation in the food chain.
	Damage to ecosystem function

[a] Premature mortality associated with ozone and carbon monoxide is not separately included in this analysis. In this analysis, we assume that the ACS/Krewski, *et al.* C–R function for premature mortality captures both PM mortality benefits and any mortality benefits associated with other air pollutants. A copy of Krewski, *et al.*, can be found in Docket A–99–06, Document No. IV–G–75.

[b] Many of the key hydrocarbons related to this rule are also hazardous air pollutants listed in the Clean Air Act.

In summary, EPA's primary estimate of the benefits of the final rule is approximately $7.8 billion in 2030. This estimate accounts for growth in real gross domestic product (GDP) per capita between the present and 2030.

The estimated social cost (measured as changes in consumer and producer surplus) in 2030 to implement the final rule from Table IX.D–1 above is $217 million (2001$). The net social gain, considering fuel efficiency, is $554 million. The monetized benefits are approximately $7.8 billion, and EPA believes there is considerable value to the public of the benefits it could not monetize. The net benefit that can be monetized is $8.4 billion. Therefore, implementation of the final rule is expected to provide society with a net gain in social welfare based on economic efficiency criteria. Table IX.E–3 summarizes the costs, benefits, and net benefits.

The net present value of the future benefits have been calculated using a 3% discount rate over the 2002 to 2030 time frame. The net present value of the social gains is $4,899 million and the net present value of the total annual benefits is $77,177 million + B. Consequently, the net present value of the monetized net benefits of this program is $82,076 million. If a discount rate of 7% is used, the values above change to $2,393 million for social gains and $40,070 million + B for total benefits, giving a total of $42,463 million.

TABLE IX.E–3.—2030 ANNUAL MONETIZED COSTS, BENEFITS, AND NET BENEFITS FOR THE FINAL RULE

	Millions of 2001 $[a]
Social Gains[f]	$550

TABLE IX.E–3.—2030 ANNUAL MONETIZED COSTS, BENEFITS, AND NET BENEFITS FOR THE FINAL RULE—Continued

	Millions of 2001 $ [a]
Monetized PM-related benefits [b,c]	$7,880 + B_{PM}
Monetized Ozone-related benefits [b,d]	Not monetized (B_{Ozone})
HC-related benefits	Not monetized (B_{HC})
CO-related benefits	Not monetized (B_{CO})
Total annual benefits	$7,880 +$B_{PM}$ + B_{Ozone} + B_{HC} + B_{CO}
Monetized net benefits [e]	$8,430 + B

[a] For this section, all costs and benefits are rounded to the nearest 10 million. Thus, figures presented in this chapter may not exactly equal benefit and cost numbers presented in earlier sections of the chapter.
[b] Not all possible benefits or disbenefits are quantified and monetized in this analysis. Potential benefit categories that have not been quantified and monetized are listed in Table IX–E.2. Unmonetized PM- and ozone-related benefits are indicated by B_{PM}. and B_{Ozone}, respectively.
[c] Based upon recent preliminary findings by the Health Effects Institute, the concentration-response functions used to estimate reductions in hospital admissions may over- or under-estimate the true concentration-response relationship.
[d] There are substantial uncertainties associated with the benefit estimates presented here, as compared to other EPA analyses that are supported by specific modeling. This analysis used a benefits transfer technique described in the RSD.
[e] B is equal to the sum of all unmonetized benefits, including those associated with PM, ozone, CO, and HC.
[f] The social gains are equal to the fuel savings minus the combined loss in consumer and producer surplus.

X. Public Participation

A wide variety of interested parties participated in the rulemaking process that culminates with this final rule. This process provided several opportunities for public comment over a period of more than two years. An Advance Notice of Proposed Rulemaking (65 FR 76797, December 7, 2000) announced our intent to address emissions from these engines. Comments received during this period were considered in the development of the proposal and are discussed in that document. These comments included information received from small businesses as a part of the inter-agency Small Business Advocacy Review Panel process which was completed before we published the proposal and is described below under the discussion of the Regulatory Flexibility Act. The formal comment period and public hearing associated with the proposal provided another opportunity for public input. We have also met with a variety of stakeholders at various points in the process, including state and environmental organizations, engine manufacturers, and equipment manufacturers.

We have prepared a detailed Summary and Analysis of Comments document, which describes the comments we received on the proposal and our response to each of these comments. The Summary and Analysis of Comments is available in the docket for this rule and on the Office of Transportation and Air Quality internet home page at *http://www.epa.gov/otaq/*.

XI. Statutory and Executive Order Reviews

A. Executive Order 12866: Regulatory Planning and Review

Under Executive Order 12866 (58 FR 51735, October 4, 1993), the Agency must determine whether the regulatory action is ''significant'' and therefore subject to review by the Office of Management and Budget (OMB) and the requirements of this Executive Order. The Executive Order defines a ''significant regulatory action'' as any regulatory action that is likely to result in a rule that may:

- Have an annual effect on the economy of $100 million or more or adversely affect in a material way the economy, a sector of the economy, productivity, competition, jobs, the environment, public health or safety, or State, Local, or Tribal governments or communities;
- Create a serious inconsistency or otherwise interfere with an action taken or planned by another agency;
- Materially alter the budgetary impact of entitlements, grants, user fees, or loan programs, or the rights and obligations of recipients thereof; or
- Raise novel legal or policy issues arising out of legal mandates, the President's priorities, or the principles set forth in the Executive Order.

A Final Regulatory Support Document has been prepared and is available in the docket for this rulemaking and at the internet address listed under **ADDRESSES** above. This action was submitted to the Office of Management and Budget for review under Executive Order 12866. Annual initial costs of this rulemaking are estimated to be over $100 million per year but this is offset by operating cost savings of over $400 million dollars per year. Even so, this rule is considered economically significant. Written comments from OMB and responses from EPA to OMB comments are in the public docket for this rulemaking.

B. Paperwork Reduction Act

The information collection requirements (ICR) in this rule will be submitted for approval to the Office of Management and Budget (OMB) under the Paperwork Reduction Act, 44 U.S.C. 3501 *et seq.*

The Agency may not conduct or sponsor an information collection, and a person is not required to respond to a request for information, unless the information collection request displays a currently valid OMB control number. The OMB control numbers for EPA's regulations are listed in 40 CFR part 9 and 48 CFR chapter 15.

The reporting requirements in this final rule do not apply until the Office of Management has approved them. We will publish a document in the **Federal Register** announcing that the information-collection requirements are approved.

C. Regulatory Flexibility Act (RFA), as Amended by the Small Business Regulatory Enforcement Fairness Act of 1996 (SBREFA), 5 U.S.C. 601 et seq.

EPA has determined that it is not necessary to prepare a regulatory flexibility analysis in connection with this final rule. EPA has also determined that this rule will not have a significant economic impact on a substantial number of small entities.

For purposes of assessing the impacts of this final rule on small entities, a small entity is defined as: (1) A small business that meet the definition for business based on SBA size standards; (2) a small governmental jurisdiction that is a government of a city, county, town, school district or special district with a population of less than 50,000; and (3) a small organization that is any not-for-profit enterprise which is independently owned and operated and is not dominant in its field. This rulemaking will affect only the small businesses.

In accordance with section 609 of the RFA, EPA conducted an outreach to small entities and convened a Small

Business Advocacy Review (SBAR) Panel prior to proposing this rule, to obtain advice and recommendations of representatives of the small entities that potentially would be subject to the rule's requirements. Through the Panel process, we gathered advice and recommendations from small-entity representatives who would be affected by the provisions in the rule relating to large SI engines and land-based recreational vehicles, and published the results in a Final Panel Report, dated July 17, 2001. EPA had previously convened a separate Panel for marine engines and vessels. This panel also produced a report, dated August 25, 1999. We also prepared an Initial Regulatory Flexibility Analysis (IRFA) in accordance with section 603 of the Regulatory Flexibility Act. The IRFA is found in chapter 8 of the Draft Regulatory Support Document. Both Panel reports and the IRFA have been placed in the docket for this rulemaking (Public Docket A–2000–01, items II–A–85, II–F–22, and III–B–01).

EPA proposed the majority of the Panel recommendations, and took comments on these and other recommendations. The information we received during this rulemaking process indicated that fewer small entities would be significantly impacted by the rule than we had originally estimated. During the SBAR Panel process, a concern was raised that importers would have limited access to certified models for import. We received no comments regarding this concern and believe that the supply of four-stroke engines for ATVs and off-highway motorcycles will continue to increase. As a result, we believe all these companies should be able to find manufacturers that are able to supply them with compliant engines. These importers incur no development costs, and they are not involved in adding emission-control hardware or other variable costs to provide a finished product to market. We also expect that the vehicles they import would have fuel tanks and hoses that comply with the permeation standards. However, even if this were not the case, the additional two or three dollars that it would cost to make them compliant with the permeation standards is trifling in comparison with the normal selling price for these vehicles. They should therefore expect to buy and sell their products with the normal markup to cover their costs and profit. As noted below, we expect all 21 known small-business importers to face compliance costs of less than one percent of their revenues. Thus, EPA has determined that this final rule will not have a significant economic impact on a substantial number of small entities. We also made some changes as a result of comments received on the proposal that we believe will further reduce the level of impact to small entities directly regulated by the rule. These can be found below in Section 5, ''Steps Taken to Minimize the Impact on Small Entities.''

Although this final rule will not have a significant impact on a substantial number of small entities, EPA has prepared a Small Business Flexibility Analysis that examines the impact of the rule on small entities, along with regulatory alternatives that could reduce that impact. This analysis would meet the requirements for a Final Regulatory Flexibility Analysis (FRFA), had that analysis been required. The Small Business Flexibility Analysis can be found in Chapter 8 of the Final Regulatory Support Document, which is available for review in the docket and is summarized below. The key elements of our Small Business Flexibility Analysis include:

—The need for, and objectives of, the rule.
—The significant issues raised by public comments, a summary of the Agency's assessment of those issues, and a statement of any changes made to the proposed rule as a result of those comments.
—The types and number of small entities to which the rule will apply.
—The reporting, record keeping and other compliance requirement of the rule.
—The steps taken to minimize the impact of the rule on small entities, consistent with the stated objectives of the applicable statute.

A fuller discussion of each of these elements can be found in the Small Business Flexibility Analysis (Chapter 8 of the Final Regulatory Support Document).

1. The Need for and Objectives of This Rule

EPA began a study of emissions from new and existing nonroad engines, equipment, and vehicles in 1991. In 1994, EPA finalized its finding that nonroad engines as a whole ''are significant contributors to ozone or carbon monoxide concentrations'' in more than one ozone or carbon monoxide nonattainment area.[97] Clean Air Act section 213 (a)(3) then requires EPA to establish standards for all classes and categories of new nonroad engines that cause or contribute to ozone or CO concentrations in more than one ozone or CO nonattainment area that achieve the greatest degree of emissions reductions achievable taking cost and other factors into account.

Since the finding in 1994, EPA has been engaged in the process of establishing programs to control emissions from nonroad engines used in many different applications. Nonroad categories already regulated include:

- Land-based compression-ignition (CI) engines (such as farm and construction equipment),
- Small land-based spark-ignition (SI) engines (such as lawn and garden equipment and string trimmers),
- Marine engines (outboards, personal watercraft, commercial marine diesel, marine diesel engines under 37 kW),
- Locomotive engines.

EPA issued an Advance Notice of Proposed Rulemaking (ANPRM) on December 7, 2000, and a Notice of Proposed Rulemaking (NPRM) on September 14, 2001, which continued the process of establishing standards for nonroad engines and vehicles, with proposed new emission standards for recreational marine diesel engines, recreational vehicles, and other nonroad spark-ignition engines over 19 kW. This final rule includes emission standards and related requirements for these vehicles and engines that are consistent with the requirements of the Act.

2. Summary of Significant Issues Raised by Public Comments

We received comments from engine and equipment manufacturers and consumers, both during the SBAR Panel process and during the comment period after we issued the proposal. Small-volume engine and equipment manufacturers commented on the financial hardships they would face in complying with the proposed regulations. Most requested that we consider hardship provisions, primarily an exemption from or a delay in the implementation of the proposed standards, or certain flexibilities in the certification process. Due to the wide variety of engines, vehicles, and equipment covered by this rulemaking, we decided that a variety of provisions were needed to address the concerns of the small entities involved. Changes to the proposal as a result of comments from small-entity representatives or others are noted below in Section 5 for each of the sectors affected by this rule.

The NPRM proposed only exhaust emission controls for recreational vehicles. However, several commenters raised the issue of control of evaporative

[97] 59 FR 31306 (July 17, 1994).

emissions related to permeation from fuel tanks and fuel hoses. They maintained that our obligations under section 213 of the Clean Air Act included control of permeation emissions, and pointed to work done by the California ARB on emissions from plastic fuel tanks and rubber fuel line hoses, as well as from portable plastic fuel containers. Our own investigation into hydrocarbon emissions related to permeation of fuel tanks and fuel hoses from recreational land-based and marine applications also supported the concerns raised by the commenters. Therefore, on May 1, 2002, we published a notice in the **Federal Register** reopening the comment period and requesting comment on possible approaches to regulating permeation emissions from recreational vehicles. The notice also included the expected costs and emission reductions resulting from these approaches. Commenters were given thirty days from May 1, 2002 to provide comments on the notice. We received comments from several affected businesses, including at least one small entity. These comments have been addressed in this final rulemaking, including several changes made to the provisions as a result of the comments.

c. Numbers and Types of Small Entities Affected

The following table provides an overview of the primary SBA small business categories potentially affected by this regulation.

TABLE XI.C–1: PRIMARY SBA SMALL BUSINESS CATEGORIES POTENTIALLY AFFECTED BY THIS REGULATION

Industry	NAICS[a] Codes	Defined by SBA as a small business if:[b]
Motorcycles and motorcycle parts manufacturers	336991	<500 employees.
Snowmobile and ATV manufacturers	336999	<500 employees.
Independent Commercial Importers of Vehicles and parts	421110	<100 employees.
Nonroad SI engines	333618	<1,000 employees.
Internal Combustion Engines	333618	<1,000 employees.
Boat Building and Repairing	336612	< 500 employees.
Fuel Tank Manufacturers	336211	<1,000 employees.

a North American Industry Classification System
b According to SBA's regulations (13 CFR part 121), businesses with no more than the listed number of employees or dollars in annual receipts are considered ''small entities'' for purposes of a regulatory flexibility analysis.

The small entities directly regulated by this rule are the following:

a. Recreational Vehicles (ATVs, snowmobiles, and off-highway motorcycles). The ATV sector has the broadest assortment of manufacturers. There are seven large companies representing over 95 percent of total domestic ATV sales. The remaining 5 percent come from small manufacturers or importers, who tend to import inexpensive, youth-oriented ATVs from China and other Asian nations. We have identified 21 small companies that offer off-highway motorcycles, ATVs, or both products. Annual unit sales for these companies can range from a few hundred to several thousand units per year.

There are three small businesses manufacturing off-highway motorcycles in the U.S. Two of these make only competition models, so do not need to certify their products under this regulation. The remaining off-highway motorcycle manufacturer already offers engines that should be meeting the new emission standards, especially under our provisions allowing design-based certification. There is one small business manufacturing two separate youth ATV models. This company already uses four-stroke engines. Also, the standards are based on emissions per watt hour, which are less costly to meet for models with small-displacement engines. As a result, we expect both of these manufacturers to face compliance costs less than one percent of their revenues.

We expect all 21 small-business importers to face compliance costs less than one percent of their revenues. These companies incur no development costs and they are not involved in adding emission-control hardware or other variable costs to provide a finished product to market. As a result, they should expect to buy and sell their products with the normal mark-up to cover their costs and profit. During the SBAR Panel process, the concern was raised that importers might have limited access to certified models for import. We received no comments confirming this concern and believe that the supply of four-stroke engines for ATVs and off-highway motorcycles will continue to increase; as a result all these companies should be able to find manufacturers that are able to supply compliant engines into the U.S. market.

We further believe that compliance with the permeation standards will not place a significant burden on either the small manufacturers or on the importers. We have estimated the incremental cost of compliance for ATVs and off-highway motorcycles at roughly three dollars per vehicle. This estimate includes shipping, and is based on buying the necessary low-permeability hoses and surface treatment for the fuel tanks from outside suppliers. Thus, no capital outlays are required, and the increase in vehicle cost is insignificant, so that it can easily be passed along to the ultimate consumer. However, to ensure that these requirements do not adversely affect small manufacturers, we are implementing, where they are applicable to permeation, the same flexibility options we proposed for the exhaust emission standards.

Based on available industry information, four major manufacturers account for over 99 percent of all domestic snowmobile sales. The remaining one percent comes from very small manufacturers who tend to specialize in unique and high-performance designs. One potential manufacturer is not a small business, but hopes to produce snowmobiles within the next year. Most of these manufacturers build less than 50 units per year. We have identified three small manufacturers of snowmobiles who are still in business (of five originally identified). Two of these companies specialize in high-performance versions of standard recreational snowmobile types (*i.e.*, travel and mountain sleds). The other manufacturer produces a unique design, which is a small scooter-like snowmobile designed to be ridden standing up. This manufacturer provided no response to repeated outreach efforts to determine potential economic effects of the final rule, but could be expected to use production engines certified to the Small SI standards.

There are thus three small businesses currently producing snowmobiles for

the U.S. market. One of these currently makes a mix of two-stroke and four-stroke models and will likely rely on the provision allowing separate standards for certain manufacturers to produce low-emitting engines with a streamlined development effort. Estimated compliance costs for this company are less than one percent of revenues. Costs for the company producing the standup snowmobile should also be less than one percent. The third manufacturer sells a single snowmobile model in addition to a sizable business of supplying aftermarket parts for snowmobiles from other manufacturers. We don't have revenue information for the whole company, but with such low sales volumes, we estimate that this company's compliance costs could reach 4–10 percent of annual snowmobile revenues.

Control of permeation emissions was not part of the SBAR Panel process. We received comments from one small snowmobile manufacturer who stated that it would experience additional hardship due to the permeation standards, because they do not have the sales volume to install the barrier treatment for fuel tanks in-house. They also commented that if shipping and processing of fuel tanks took 3–4 months, it would be difficult for a small business to tie up funds for so long. However, we believe that the permeation control requirements should be relatively easy for small businesses to meet, given the relatively low costs involved ($5 to $7 per sled, based on outside vendor costs). This is insignificant in comparison to the cost of the high-end sleds that this company produces and should not materially affect the company's cash flow. We also believe it is not necessary, or cost-effective, for a small entity to make the capital investments for in-house treatment facilities. Low permeation fuel hoses are available from vendors today, and we would expect that surface treatment would be applied through an outside company, rather than installing a treatment facility in house. In any event, to make sure that these requirements do not adversely affect small manufacturers, we are implementing, where they are applicable to permeation, the same flexibility options we proposed for the exhaust emission standards.

b. Marine Vessels. Marine vessels include the boat, engine, and fuel system. Exhaust emission controls including NTE requirements, as addressed in the August 29, 1999 and July 17, 2001 SBAR Panel Reports, may affect the engine manufacturers and may affect boat builders.

We have determined that at least 16 companies manufacture marine diesel engines for recreational vessels. Nearly 75 percent of diesel engines sales for recreational vessels in 2000 can be attributed to three large companies. Six of the 16 identified companies are considered small businesses as defined by SBA. Based on sales estimates for 2000, these six companies represent approximately 4 percent of recreational marine diesel engine sales. The remaining companies each comprise between two and seven percent of sales for 2000.

We are thus aware of six small businesses producing marine diesel engines that may be considered recreational. Three of these companies produce both commercial and recreational models without significant differences, so we expect them to meet the standards in this final rule with little more than the administrative expenses associated with including recreational models in their commercial engine families. High-performance recreational marine diesel engines already include technologies that help control NO_X emissions, so our cost estimates include relatively modest development costs to add new technologies. Moreover, the small-business provisions allowing substantial additional lead time provide an opportunity for these companies to spread development and certification costs over several years. As a result, we expect one small business to have compliance costs approaching one percent and one to have compliance costs between 1 and 3 percent. One very small business could have compliance costs of about four percent of annual revenues.

c. Large Spark-ignition Engines. We are aware of two manufacturers of Large SI engines qualifying as small businesses. One of these companies plans to produce engines that meet the standards adopted by California ARB in 2004, with the possible exception of one engine family. The other company is attempting to restart the production of engines from another failed company. This company did not exist during the SBAR Panel process associated with this rule.

The established company will face relatively small compliance costs as a result of this rule, since California-compliant engines will need only a small amount of additional development effort to meet long-term standards. These costs should be less than one percent of revenues.

The start-up company faces significant development costs, though much of this effort is required to improve the engine enough to sustain a market presence as other manufacturers continue to make improvements to competitive engines. Under the hardship provisions, we expect the start-up company to spread compliance costs over several years to reduce the impact of emission standards. We nevertheless estimate that the compliance costs associated with meeting EPA emission standards are about 5 percent of revenues. Since this manufacturer is operating in a niche market, with customers providing public comments citing the need for these engines, we expect that most of the increased cost of production will be recovered by increased revenues.

d. Result for all Small Entities. For this regulation as a whole, we expect 32 small businesses to have total compliance costs less than 1 percent of their annual revenues. We estimate that one company will have compliance costs between 1 and 3 percent of revenues. Three companies will likely have compliance costs exceeding 3 percent of revenues, but at least one will likely be able to benefit from the relief provisions outlined below. These estimates include the costs for compliance with the permeation standards.

4. Reporting, Record Keeping, and Compliance Requirements

For any emission-control program, we need assurance that the regulated engines will meet the standards. Historically, EPA programs have assigned manufacturers the responsibility to provide these assurances. This final rule includes testing, reporting, and record keeping requirements. Testing requirements for some manufacturers include certification (including deterioration testing) and production-line testing. Reporting and record keeping requirements include test data and technical data on the engines, including defect reporting.

5. Steps Taken To Minimize the Impact on Small Entities

The two SBAR Panels considered a variety of provisions to reduce the burden of complying with new emission standards and related requirements. Some of these provisions (such as emission-credit programs) would apply to all companies, while others would be targeted at the unique circumstances faced by small businesses. A complete discussion of the regulatory alternatives recommended by the Panels can be found in the Final Panel Reports. Summaries of the Panels' recommended alternatives for each of the sectors

subject to this action can also be found in their respective sections of the preamble.

The following Panel recommendations are being finalized by the Agency, except for a few items as noted below:

(A) Related Federal Rules

The Panel recommended that EPA continue to consult with the CPSC in developing the rule to better understand the scope of the Commission's regulations as they may relate to the competition exemption.

(B) Regulatory Flexibility Alternatives

The Panel recommended that EPA consider and seek comments on a wide range of alternatives, including the flexibility options described below. As noted above, we issued a subsequent **Federal Register** notice dated May 1, 2002 (67 FR 21613), seeking comment on applying permeation control standards for fuel tanks and fuel hoses used on recreational vehicles. The flexibilities listed below for recreational vehicles would generally also apply to those controls, which would effectively extend the panel recommendations to the permeation controls as well.

(1) Large SI Engines

The Panel recommended that EPA propose several possible provisions to address concerns that the new EPA standards could potentially place small businesses at a competitive disadvantage to larger entities in the industry. These provisions are described below.

(a) Using Certification and Emission Standards From Other EPA Programs. The Panel made several recommendations for this provision. First, the Panel recommended that EPA temporarily expand this arrangement to allow small numbers of constant-speed engines up to 2.5 liters (up to 30kW) to be certified to the Small SI standards. Second, the Panel further recommended that EPA seek comment on the appropriateness of limiting the sales level of 300. Third, the Panel recommended that EPA request comment on the anticipated cap of 30 kW on the special treatment provisions outlined above, or whether a higher cap on power rating is appropriate. Finally, the Panel recommended that EPA propose to allow small-volume manufacturers producing engines up to 30kW to certify to the Small SI standards during the first 3 model years of the program. Thereafter, the standards and test procedures which could apply to other companies at the start of the program would apply to small businesses. We are not adopting this provision and are instead relying on the hardship provisions in the final rule, which will allow us to accomplish the objective of the proposed provision with more flexibility.

(b) Delay of Emission Standards. The Panel recommended that EPA propose to delay the applicability of the long-term standards to small-volume manufacturers for three years beyond the date at which they would generally apply to accommodate the possibility that small companies need to undertake further design work to adequately optimize their designs and to allow them to recover the costs associated with the near-term emission standards. We are also folding this provision into the scope of the hardship provision, but have decided to increase the delay to up to four years, depending on the nature of the hardship involved.

(c) Production-Line Testing. The Panel made several recommendations for this provision. First, the Panel recommended that EPA adopt provisions allowing more flexibility than is available under the California Large SI program or other EPA programs in general to address the concern that production-line testing is another area where small-volume manufacturers typically face a difficult testing burden. Second, the Panel recommended that EPA allow small-volume manufacturers to have a reduced testing rate if they have consistently good test results from testing production-line engines. Finally, the Panel recommended that EPA allow small-volume manufacturers to use alternative low-cost testing options to show that production-line engines meet emission standards.

(d) Deterioration Factors. The Panel recommended that EPA allow small-volume manufacturers to develop deterioration factors based on available emission measurements and good engineering judgment.

(e) Hardship Provision. The Panel recommended that EPA propose two types of hardship provisions for Large SI engines. First the Panel recommended that EPA allow small businesses to petition EPA for up to three years of additional lead time to comply with the standards. Second, the Panel recommended that EPA allow small businesses to apply for hardship relief if circumstances outside their control cause the failure to comply (such as a supply contract broken by a parts supplier) and if the failure to sell the subject engines would have a major impact on the company's solvency.

(2) Off-Highway Motorcycles and ATVs

The NPRM for this rule discussed several flexibility options for small businesses manufacturing recreational vehicles, based on the SBAR Panel process. When we reopened the comment period on May 1, 2002 to request comment on possible approaches to regulating permeation emissions from recreational vehicles, we did not specifically discuss small business issues. However, it is our intent that these provisions carry over to permeation controls as well.

The Panel made the following recommendations for this subcategory:

(a) General Recommendations. (1) The Panel recommended that EPA propose to apply the flexibilities described below to engines produced or imported by small entities with combined off-highway motorcycle and ATV annual sales of less than 5,000 units per model year.

(2) The Panel recommended that EPA request comment on the appropriateness of the 5,000 unit per model year threshold.

(3) The Panel recommended that EPA request comment on allowing small entities with sales in excess of 5,000 units to certify using the flexible approaches described below for a number of engines equal to their 2000 or 2001 sales level.

(4) The Panel recommended that EPA describe and seek comment on the effect of the standards on these entities, including a request for any data and/or related studies to estimate the extent to which sales of their products are likely to be reduced as a result of changes in product price that are attributable to the emission standards.

(5) The Panel recommended that, in the final rule, EPA assess any information received in response to this request for purposes of informing the final rule decision making process on whether additional flexibility (beyond that considered in this report) is warranted.

(b) Additional Lead-Time To Meet Emission Standards. First, the Panel recommended that EPA propose at least a two-year delay, but seek comment on whether a larger time period is appropriate given the costs of compliance for small businesses and the relationship between importers and their suppliers. Second, the Panel recommended that EPA provide additional time for small-volume manufacturers to revise their manufacturing process, and would allow importers to change their supply chain to acquire complying products. Third, the Panel recommended that EPA

request comment on the appropriate length for a delay (lead-time).

(c) Design Certification. The Panel recommended that EPA propose to permit small entities to use design-based certification. The Panel also recommended that EPA work with the small-entity representatives and other members of the industry to develop appropriate criteria for such design-based certification.

(d) Broaden Engine Families. The Panel recommended that EPA request comment on engine family flexibility and conducting design-based certification emissions testing.

(e) Production-Line Testing Waiver. The Panel recommended that EPA propose to provide small manufacturers and small importers a waiver from manufacturer production-line testing. The Panel also recommended that EPA request comment on whether limits or the scope of this waiver are appropriate.

(f) Use of Assigned Deterioration Factors During Certification. The Panel recommended that EPA propose to provide small business with the option to use assigned deterioration factors.

(g) Using Certification and Emission Standards from Other EPA Programs. The Panel recommended that EPA propose to provide small business with this flexibility through the fifth year of the program and request comment on which of the already established standards and programs are believed to be a useful certification option for the small businesses.

(h) Averaging, Banking, and Trading. The Panel recommended that EPA propose to provide small business with the same averaging, banking, and trading program flexibilities that would apply for large manufacturers and request comment on how the provisions could be enhanced for small business to make them more useful.

(i) Hardship Provisions. The Panel recommended that EPA propose two types of hardship program for off-highway motorcycles and ATVs: First, EPA should allow small manufacturers and small importers to petition EPA for limited additional lead-time to comply with the standards. Second, EPA should allow small manufacturers and small importers to apply for hardship relief if circumstances outside their control cause the failure to comply (such as a supply contract broken by a parts supplier) and if failure to sell the subject engines or vehicles would have a major impact on the company's solvency.

The Panel also recommended that EPA propose both aspects of the hardship provisions for small off-highway motorcycle and ATV manufacturers and importers and seek comment on the implementation provisions.

(3) Marine Vessels

(a) Delay Standards for Five Years. The Panel recommended that EPA delay the standards for five years for small businesses.

(b) Design-Based Certification. The Panel recommended that EPA allow manufacturers to certify by design and to be able use this to generate credits under this approach. The Panel also recommended that EPA provide adequately detailed design specifications and associated emission levels for several technology options that could be used to certify. Although we proposed this approach, we were unable to specify any technology options for diesel engines that could be used for design-based certification. We requested comment on such designs and received no comment. Therefore, we are not finalizing a design-based certification option. However, we are finalizing the engine dresser provisions and expanding these provisions to include water-cooled turbocharging. This will allow some engines to be exempt from the standards based on design.

(c) Broadly Defined Product Certification Families. The Panel recommended that EPA take comment on the need for broadly defined emission families and how these families should be defined.

(d) Hardship Provisions. The Panel recommended that EPA propose two types of hardship programs for marine engine manufacturers, boat builders and fuel tank manufacturers: First, that we should allow small businesses to petition us for additional lead time to comply with the standards. Second, EPA should allow small businesses to apply for hardship relief if circumstances outside their control cause the failure to comply (such as a supply contract broken by a parts supplier) and if the failure to sell the subject fuel tanks or boats would have a major impact on the company's solvency. The Panel also recommended that EPA work with small manufacturers to develop these criteria and how they would be used.

(e) Burden Reduction Approaches Designed for Small Marinizers of Marine Engines With Respect to NTE Provisions. The Panel recommended that EPA specifically include NTE in a design-based approach.

(4) Snowmobiles

As noted above, permeation standards were not part of the original NPRM for this rule, which incorporated recommendations from the SBAR Panel process. When we reopened the comment period on May 1, 2002 to request comment on possible approaches to regulating permeation emissions from recreational vehicles, which would apply to snowmobiles as well as to off-highway motorcycles and ATVs, we did not specifically discuss small business issues. However, it is our intent that the proposed flexibilities for exhaust emissions carry over to permeation controls for all three vehicle categories, to the extent that they are applicable.

(a) Delay of Emission Standards. The Panel recommended that EPA propose to delay the standards for small snowmobile manufacturers by two years from the date at which other manufacturers would be required to comply. The Panel also recommended that EPA propose that the emission standards for small snowmobile manufacturers be phased in over an additional two year (four years to fully implement the standard). Thus, the 2006 Phase 1 standards would be phased in at 50/100 percent in 2008/2009, the Phase 2 standards would be phased in at 50/100 percent in 2012/2013, and the Phase 3 standards would be phased in at 50/100 percent in 2014/2015.

(b) Design-Based Certification. The Panel recommended that EPA take comment on how design-based certification could be applied to small snowmobile manufacturers, and that EPA work with the small entities in the design and implementation of this concept.

(c) Broader Engine Families. The Panel recommended that EPA propose a provision for small snowmobile manufactures that would use relaxed criteria for what constitutes an engine or vehicle family.

(d) Elimination of Production-Line Testing Requirements. The Panel recommended that EPA propose that small snowmobile manufacturers not be subject to production-line testing requirements.

(e) Use of Assigned DF During Certification. The Panel recommended that EPA propose to allow small snowmobile manufacturers to elect to use deterioration factors determined by EPA to demonstrate end of useful life emission levels, thus reducing development/testing burdens, rather than performing a durability demonstration for each engine family as part of the certification testing requirement.

(f) Using Certification and Emission Standards From Other EPA Programs. The Panel recommended that EPA

propose to provide small business with the flexibility to use an engine certified to another EPA program without recertifying it in its new application provided that the manufacturer does not alter the engine in such a way as to cause it to exceed the emission standards it was originally certified to meet.

(g) Averaging, Banking and Trading. The Panel recommended that EPA propose an averaging, banking and trading program for snowmobiles, and seek comment on additional flexibilities related to emission credits that should be considered for small snowmobile manufacturers.

(h) Hardship Provisions. The Panel recommended that EPA propose two types of hardship programs for small snowmobile manufacturers. First, EPA should allow small snowmobile manufacturers to petition EPA for additional lead time to comply with the standards. Second, EPA should allow small snowmobile manufacturers to apply for hardship relief if circumstances outside their control cause the failure to comply (such as a supply contract broken by a parts supplier) and if failure to sell the subject engines or vehicles would have a major impact on the company's solvency.

(i) Unique Snowmobile Engines. The Panel recommended that EPA seek comment on an additional provision, which would allow a small snowmobile manufacturer to petition EPA for relaxed standards for one or more engine families. The Panel also recommended that EPA allow a provision for EPA to set an alternative standard at a level between the prescribed standard and the baseline level until the engine family is retired or modified in such a way as to increase emission and for the provision to be extended for up to 300 engines per year per manufacturer would assure it is sufficiently available for those manufacturers for whom the need is greatest. However, we received comment that the limit of 300 is too restrictive to be of much assistance to small businesses. Based on this comment we are adopting a limit for this provision of 600 snowmobiles per year. Finally, the Panel recommended that EPA seek comment on initial and deadline dates for the submission of such petitions. We received no comments in this area, but for clarity have decided to require at least nine months lead time by the petitioner.

(5) Conclusion

In summary, considering both exhaust emission and permeation regulations, we have found that only three small entities are likely to be impacted by more than 3 percent of their sales, and the degree of impact is likely to be further reduced by the flexibilities that are being finalized in this rulemaking. Therefore, this final rule will not have a significant economic impact on a substantial number of small entities.

D. Unfunded Mandates Reform Act

Title II of the Unfunded Mandates Reform Act of 1995 (UMRA), Public Law 104–4, establishes requirements for federal agencies to assess the effects of their regulatory actions on state, local, and tribal governments and the private sector. Under section 202 of the UMRA, EPA generally must prepare a written statement, including a cost-benefit analysis, for proposed and final rules with ''federal mandates'' that may result in expenditures to state, local, and tribal governments, in the aggregate, or to the private sector, of $100 million or more in any one year. Before promulgating an EPA rule for which a written statement is needed, section 205 of the UMRA generally requires EPA to identify and consider a reasonable number of regulatory alternatives and adopt the least costly, most cost-effective, or least burdensome alternative that achieves the objectives of the rule. The provisions of section 205 do not apply when they are inconsistent with applicable law. Moreover, section 205 allows EPA to adopt an alternative other than the least costly, most cost-effective, or least burdensome alternative if the Administrator publishes with the final rule an explanation of why that alternative was not adopted.

Before EPA establishes any regulatory requirements that may significantly or uniquely affect small governments, including tribal governments, it must have developed under section 203 of the UMRA a small government agency plan. The plan must provide for notifying potentially affected small governments, enabling officials of affected small governments to have meaningful and timely input in the development of EPA regulatory proposals with significant federal intergovernmental mandates, and informing, educating, and advising small governments on compliance with the regulatory requirements.

This rule contains no federal mandates for state, local, or tribal governments as defined by the provisions of Title II of the UMRA. The rule imposes no enforceable duties on any of these governmental entities. Nothing in the rule would significantly or uniquely affect small governments.

EPA has determined that this rule contains federal mandates that may result in expenditures of more than $100 million to the private sector in any single year. EPA believes that this rule represents the least costly, most cost-effective approach to achieve the air quality goals of the rule. The costs and benefits associated with the rule are discussed in Section IX and in the Small Business Support Document, as required by the UMRA.

E. Executive Order 13132: Federalism

Executive Order 13132, entitled ''Federalism'' (64 FR 43255, August 10, 1999), requires EPA to develop an accountable process to ensure ''meaningful and timely input by State and local officials in the development of regulatory policies that have federalism implications.'' ''Policies that have federalism implications'' are defined in the Executive Order to include regulations that have ''substantial direct effects on the States, on the relationship between the national government and the States, or on the distribution of power and responsibilities among the various levels of government.''

Under Section 6 of Executive Order 13132, EPA may not issue a regulation that has federalism implications, that imposes substantial direct compliance costs, and that is not required by statute, unless the Federal government provides the funds necessary to pay the direct compliance costs incurred by State and local governments, or EPA consults with State and local officials early in the process of developing the regulation. EPA also may not issue a regulation that has federalism implications and that preempts State law, unless the Agency consults with State and local officials early in the process of developing the regulation.

Section 4 of the Executive Order contains additional requirements for rules that preempt State or local law, even if those rules do not have federalism implications (*i.e.*, the rules will not have substantial direct effects on the States, on the relationship between the national government and the states, or on the distribution of power and responsibilities among the various levels of government). Those requirements include providing all affected State and local officials notice and an opportunity for appropriate participation in the development of the regulation. If the preemption is not based on express or implied statutory authority, EPA also must consult, to the extent practicable, with appropriate State and local officials regarding the conflict between State law and Federally protected interests within the agency's area of regulatory responsibility.

This rule does not have federalism implications. It will not have substantial direct effects on the States, on the relationship between the national government and the States, or on the distribution of power and responsibilities among the various levels of government, as specified in Executive Order 13132.

Although Section 6 of Executive Order 13132 does not apply to this rule, EPA did consult with representatives of various State and local governments in developing this rule. EPA has also consulted representatives from STAPPA/ALAPCO, which represents state and local air pollution officials.

F. Executive Order 13175: Consultation and Coordination With Indian Tribal Governments

Executive Order 13175, entitled ''Consultation and Coordination with Indian Tribal Governments'' (65 FR 67249, November 6, 2000), requires EPA to develop an accountable process to ensure ''meaningful and timely input by tribal officials in the development of regulatory policies that have tribal implications.'' ''Policies that have tribal implications'' is defined in the Executive Order to include regulations that have ''substantial direct effects on one or more Indian tribes, on the relationship between the Federal government and the Indian tribes, or on the distribution of power and responsibilities between the Federal government and Indian tribes.''

This rule does not have tribal implications. It will not have substantial direct effects on tribal governments, on the relationship between the Federal government and Indian tribes, or on the distribution of power and responsibilities between the Federal government and Indian tribes, as specified in Executive Order 13175. The emission standards and other related requirements for private businesses in this rule have national applicability and therefore do not uniquely affect the communities of Indian Tribal Governments. Further, no circumstances specific to such communities exist that would cause an impact on these communities beyond those discussed in the other sections of this rule. Thus, Executive Order 13175 does not apply to this rule.

G. Executive Order 13045: Protection of Children From Environmental Health and Safety Risks

Executive Order 13045, ''Protection of Children from Environmental Health Risks and Safety Risks'' (62 FR 19885, April 23, 1997) applies to any rule that (1) is determined to be ''economically significant'' as defined under Executive Order 12866, and (2) concerns an environmental health or safety risk that EPA has reason to believe may have a disproportionate effect on children. If the regulatory action meets both criteria, Section 5–501 of the Order directs the Agency to evaluate the environmental health or safety effects of the planned rule on children, and explain why the planned regulation is preferable to other potentially effective and reasonably feasible alternatives considered by the Agency.

This rule is not subject to the Executive Order because it does not involve decisions on environmental health or safety risks that may disproportionately affect children.

The effects of ozone and PM on children's health were addressed in detail in EPA's rulemaking to establish the NAAQS for these pollutants, and EPA is not revisiting those issues here. EPA believes, however, that the emission reductions from the strategies in this rulemaking will further reduce air toxics and the related adverse impacts on children's health.

H. Executive Order 13211: Actions That Significantly Affect Energy Supply, Distribution, or Use

This rule is not a ''significant energy action'' as defined in Executive Order 13211, ''Actions Concerning Regulations That Significantly Affect Energy Supply, Distribution, or Use'' (66 FR 28355 (May 22, 2001)) because it is not likely to have a significant adverse effect on the supply, distribution or use of energy. The aim to reduce emissions from certain nonroad engines and have no effect on fuel formulation, distribution, or use. Generally, the final rule leads to reduced fuel usage due to the improvements in engine-based emission-control technologies.

I. National Technology Transfer and Advancement Act

Section 12(d) of the National Technology Transfer and Advancement Act of 1995 (''NTTAA''), Public Law 104–113, section 12(d) (15 U.S.C. 272 note) directs EPA to use voluntary consensus standards in its regulatory activities unless doing so would be inconsistent with applicable law or otherwise impractical. Voluntary consensus standards are technical standards (such as materials specifications, test methods, sampling procedures, and business practices) that are developed or adopted by voluntary consensus standards bodies. NTTAA directs EPA to provide Congress, through OMB, explanations when the Agency decides not to use available and applicable voluntary consensus standards.

This rule involves technical standards. The following paragraphs describe how we specify testing procedures for engines subject to this rule.

The International Organization for Standardization (ISO) has a voluntary consensus standard that can be used to test Large SI engines. However, the current version of that standard (ISO 8178) is applicable only for steady-state testing, not for transient testing. As described in the Final Regulatory Support Document, transient testing is an important part of the emission-control program for these engines. We are therefore not adopting the ISO procedures in this rulemaking.

Underwriters Laboratories (UL) has adopted voluntary consensus standards for forklifts that are relevant to the new requirements for Large SI engines. UL sets a maximum temperature specification for gasoline and, for forklifts used in certain applications, defines requirements to avoid venting from gasoline fuel tanks. We are adopting a different temperature limit, because the maximum temperature specified by UL does not prevent fuel boiling. We are adopting separate measures to address venting of gasoline vapors, because of UL's provisions to allow venting with an orifice up to 1.78 mm (0.070 inches). We believe forklifts with such a vent would have unnecessarily high evaporative emissions. If the UL standard is revised to address these technical concerns, it would be appropriate to reference the UL standard in our regulations. An additional concern relates to the fact that the UL requirements apply only to forklifts (and not all forklifts in the case of the restriction on vapor venting). EPA regulations would therefore need to, at a minimum, extend any published UL standards to other engines and equipment to which the UL standards would otherwise not apply.

The Gas Processors Association has adopted standards with fuel specifications for liquefied petroleum gas. However, there is no existing regulations requiring suppliers to meet these specifications. Comments received on the rule indicate a high level of concern that in-use fuel quality does not meet the published voluntary standards, so we are not relying on these fuel specifications to define fuels for certification testing.

We are adopting requirements to test off-highway motorcycles and all-terrain vehicles with the Federal Test Procedure, a chassis-based transient test. There is no voluntary consensus

standard that would adequately address engine or vehicle operation for suitable emission measurement. Furthermore, we are interested in pursuing an engine-based test procedure for all-terrain vehicles. We intend to develop a new duty cycle for this, because there is no acceptable engine duty cycle today that would adequately represent the way these engines operate. For snowmobiles, we are adopting test procedures based on work that has been published, but not yet adopted as a voluntary consensus standard.

For recreational marine diesel engines, we are adopting the same test procedures that we have established for commercial marine diesel engines (with a new duty cycle appropriate for recreational applications). We are again adopting these procedures in place of the ISO 8178 standard that would apply to these engines. We believe that ISO 8178 relies too heavily on reference testing conditions. Because our test procedures need to represent in-use operation typical of operation in the field, they must be based on a range of ambient conditions. We determined that the ISO procedures are not broadly usable in their current form, and therefore should not be adopted by reference. We remain hopeful that future ISO test procedures will be developed that are usable and accurate for the broad range of testing needed, and that such procedures could then be adopted. We expect that any such development of revised test procedures will be done in accordance with ISO procedures and in a balanced and transparent manner that includes the involvement of all interested parties, including industry, U.S. EPA, foreign government organizations, state governments, and environmental groups. In so doing, we believe that the resulting procedures would be ''global'' test procedures that can facilitate the free flow of international commerce for these products.

J. Congressional Review Act

The Congressional Review Act, 5 U.S.C. 801 *et seq.*, as added by the Small Business Regulatory Enforcement Fairness Act of 1996, generally provides that before a rule may take effect, the agency promulgating the rule must submit a rule report, which includes a copy of the rule, to each House of the Congress and to the Comptroller General of the United States. EPA will submit a report containing this rule and other required information to the U.S. Senate, the U.S. House of Representatives, and the Comptroller General of the United States prior to publication of the rule in the Federal Register. This rule is a ''major rule'' as defined by 5 U.S.C. 804(2).

K. Plain Language

This document follows the guidelines of the June 1, 1998 Executive Memorandum on Plain Language in Government Writing. To read the text of the regulations, it is also important to understand the organization of the Code of Federal Regulations (CFR). The CFR uses the following organizational names and conventions.

Title 40—Protection of the Environment

Chapter I—Environmental Protection Agency

Subchapter C—Air Programs. This contains parts 50 to 99, where the Office of Air and Radiation has usually placed emission standards for motor vehicle and nonroad engines.

Subchapter U—Air Programs Supplement. This contains parts 1000 to 1299, where we intend to place regulations for air programs in future rulemakings.

Part 1048—Control of Emissions from New, Large, Nonrecreational, Nonroad Spark-ignition Engines. Most of the provisions in this part apply only to engine manufacturers.

Part 1051—Control of Emissions from Recreational Engines and Vehicles. Most of the provisions in this part apply only to vehicle manufacturers.

Part 1065—General Test Procedures for Engine Testing. Provisions of this part apply to anyone who tests engines to show that they meet emission standards.

Part 1068—General Compliance Provisions for Engine Programs. Provisions of this part apply to everyone.

Each part in the CFR has several subparts, sections, and paragraphs. The following illustration shows how these fit together.

Part 1048

Subpart A

Section 1048.1

(a)

(b)

(1)

(2)

(i)

(ii)

A cross reference to § 1048.1(b) in this illustration would refer to the parent paragraph (b) and all its subordinate paragraphs. A reference to § 1048.1(b) introductory text'' would refer only to the single, parent paragraph (b).

List of Subjects

40 CFR Part 89

Environmental protection, Administrative practice and procedure,

Confidential business information, Imports, Labeling, Motor vehicle pollution, Reporting and recordkeeping requirements, Research, Vessels, Warranties.

40 CFR Part 90

Environmental protection, Administrative practice and procedure, Air pollution control, Confidential business information, Imports, Labeling, Reporting and recordkeeping requirements, Research, Warranties.

40 CFR Part 91

Environmental protection, Administrative practice and procedure, Air pollution control, Confidential business information, Imports, Labeling, Penalties, Reporting and recordkeeping requirements, Warranties.

40 CFR Part 94

Environmental protection, Administrative practice and procedure, Air pollution control, Confidential business information, Imports, Penalties, Reporting and recordkeeping requirements, Vessels, Warranties.

40 CFR Part 1048

Environmental protection, Administrative practice and procedure, Air pollution control, Confidential business information, Imports, Incorporation by reference, Labeling, Penalties, Reporting and recordkeeping requirements, Research, Warranties.

40 CFR Part 1051

Environmental protection, Administrative practice and procedure, Air pollution control, Confidential business information, Imports, Incorporation by reference, Labeling, Penalties, Reporting and recordkeeping requirements, Warranties.

40 CFR Part 1065

Environmental protection, Administrative practice and procedure, Incorporation by reference, Reporting and recordkeeping requirements, Research.

40 CFR Part 1068

Environmental protection, Administrative practice and procedure, Confidential business information, Imports, Motor vehicle pollution, Penalties, Reporting and recordkeeping requirements, Warranties.

Dated: September 13, 2002.

Christine Todd Whitman,

Administrator.

For the reasons set out in the preamble, title 40, chapter I of the Code of Federal Regulations is amended as set forth below.

PART 89—CONTROL OF EMISSIONS FROM NEW AND IN-USE NONROAD COMPRESSION-IGNITION ENGINES

1. The authority for part 89 continues to read as follows:

Authority: 42 U.S.C. 7521, 7522, 7523, 7524, 7525, 7541, 7542, 7543, 7545, 7547, 7549, 7550, and 7601(a).

Subpart A—[Amended]

2. Section 89.2 is amended by adding definitions for ''Aircraft'', ''Spark-ignition'', and ''United States'' in alphabetic order and revising the definition of ''Compression-ignition'' to read as follows:

§ 89.2 Definitions.

* * * * *

Aircraft means any vehicle capable of sustained air travel above treetop heights.

* * * * *

Compression-ignition means relating to a type of reciprocating, internal-combustion engine that is not a spark-ignition engine.

* * * * *

Spark-ignition means relating to a gasoline-fueled engine or other engines with a spark plug (or other sparking device) and with operating characteristics significantly similar to the theoretical Otto combustion cycle. Spark-ignition engines usually use a throttle to regulate intake air flow to control power during normal operation.

* * * * *

United States means the States, the District of Columbia, the Commonwealth of Puerto Rico, the Commonwealth of the Northern Mariana Islands, Guam, American Samoa, the U.S. Virgin Islands, and the Trust Territory of the Pacific Islands.

* * * * *

Subpart B—[Amended]

3. Section 89.106 is amended by revising paragraph (b) read as follows:

§ 89.106 Prohibited controls.

* * * * *

(b) You may not design your engines with emission-control devices, systems, or elements of design that cause or contribute to an unreasonable risk to public health, welfare, or safety while operating. For example, this would apply if the engine emits a noxious or toxic substance it would otherwise not emit that contributes to such an unreasonable risk.

PART 90—CONTROL OF EMISSIONS FROM NONROAD SPARK-IGNITION ENGINES AT OR BELOW 19 KILOWATTS

4. The heading to part 90 is revised to read as set forth above.

5. The authority for part 90 continues to read as follows:

Authority: 42 U.S.C. 7521, 7522, 7523, 7524, 7525, 7541, 7542, 7543, 7547, 7549, 7550, and 7601(a).

Subpart A—[Amended]

6. Section 90.1 is revised to read as follows:

§ 90.1 Applicability.

(a) This part applies to new nonroad spark-ignition engines and vehicles with gross power output at or below 19 kilowatts (kW) used for any purpose, unless we exclude them under paragraph (d) of this section.

(b) This part also applies to engines with a gross power output above 19 kW if the manufacturer uses the provisions of 40 CFR 1048.615 or 1051.145(a)(3) to exempt them from the requirements of 40 CFR part 1048 or 1051, respectively. Compliance with the provisions of this part is a required condition of those exemptions.

(c) [Reserved]

(d) The following nonroad engines and vehicles are not subject to the provisions of this part:

(1) Engines certified to meet the requirements of 40 CFR part 1051 (*e.g.,* engines used in snowmobiles). This part nevertheless applies to engines used in recreational vehicles if the manufacturer uses the provisions of 40 CFR 1051.145(a)(3) to exempt them from the requirements of 40 CFR part 1051. Compliance with the provisions of this part is a required condition of that exemption.

(2) Engines used in highway motorcycles. See 40 CFR part 86, subpart E.

(3) Propulsion marine engines. See 40 CFR part 91. This part applies with respect to auxiliary marine engines.

(4) Engines used in aircraft. See 40 CFR part 87.

(5) Engines certified to meet the requirements of 40 CFR part 1048.

(6) Hobby engines.

(7) Engines that are used exclusively in emergency and rescue equipment where no certified engines are available to power the equipment safely and practically, but not including generators, alternators, compressors or pumps used to provide remote power to a rescue tool. The equipment manufacturer bears the responsibility to ascertain on an annual basis and maintain documentation available to the Administrator that no appropriate certified engine is available from any source.

(e) Engines subject to the provisions of this subpart are also subject to the provisions found in subparts B through N of this part, except that Subparts C, H, M and N of this part apply only to Phase 2 engines as defined in this subpart.

(f) Certain text in this part is identified as pertaining to Phase 1 or Phase 2 engines. Such text pertains only to engines of the specified Phase. If no indication of Phase is given, the text pertains to all engines, regardless of Phase.

7. Section 90.2 is amended by adding a new paragraph (c) to read as follows:

§ 90.2 Effective dates.

* * * * *

(c) Notwithstanding paragraphs (a) and (b) of this section, engines used in recreational vehicles with engine rated speed greater than or equal to 5,000 rpm and with no installed speed governor are not subject to the provisions of this part through the 2005 model year. Starting with the 2006 model year, all the requirements of this part apply to engines used in these vehicles if they are not included in the scope of 40 CFR part 1051.

8. Section 90.3 is amended by adding definitions for ''Aircraft'', ''Hobby engines'', ''Marine engine'', ''Marine vessel'', ''Recreational'', and ''United States'' in alphabetical order, to read as follows:

§ 90.3 Definitions.

* * * * *

Aircraft means any vehicle capable of sustained air travel above treetop heights.

* * * * *

Hobby engines means engines used in reduced-scale models of vehicles that are not capable of transporting a person (for example, model airplanes).

Marine engine means an engine that someone installs or intends to install on a marine vessel. There are two kinds of marine engines:

(1) *Propulsion marine engine* means a marine engine that moves a vessel through the water or directs the vessel's movement.

(2) *Auxiliary marine engine* means a marine engine not used for propulsion.

Marine vessel means a vehicle that is capable of operation in water but is not capable of operation out of water. Amphibious vehicles are not marine vessels.

* * * * *

Recreational means, for purposes of this part, relating to a vehicle intended by the vehicle manufacturer to be operated primarily for pleasure.

* * * * *

United States means the States, the District of Columbia, the Commonwealth of Puerto Rico, the Commonwealth of the Northern Mariana Islands, Guam, American Samoa, the U.S. Virgin Islands, and the Trust Territory of the Pacific Islands.

* * * * *

Subpart B—[Amended]

9. Section 90.103 is amended by redesignating paragraph (a)(2)(v) as paragraph (a)(2)(vi) and adding a new paragraph (a)(2)(v) to read as follows:

§ 90.103 Exhaust emission standards.

(a)* * *

(2)* * *

(v) The engine must be used in a recreational application, with a combined total vehicle dry weight under 20 kilograms;

* * * * *

10. Section 90.110 is amended by revising paragraph (b) to read as follows:

§ 90.110 Requirement of certification—prohibited controls.

* * * * *

(b) You may not design your engines with emission-control devices, systems, or elements of design that cause or contribute to an unreasonable risk to public health, welfare, or safety while operating. For example, this would apply if the engine emits a noxious or toxic substance it would otherwise not emit that contributes to such an unreasonable risk.

PART 91—CONTROL OF EMISSIONS FROM MARINE SPARK–IGNITION ENGINES

11. The authority for part 91 continues to read as follows:

Authority: 42 U.S.C. 7521, 7522, 7523, 7524, 7525, 7541, 7542, 7543, 7547, 7549, 7550, and 7601(a).

Subpart A—[Amended]

12. Section 91.3 is amended by adding the definition for ''United States'' in alphabetical order to read as follows:

§ 91.3 Definitions.

* * * * *

United States means the States, the District of Columbia, the Commonwealth of Puerto Rico, the Commonwealth of the Northern Mariana Islands, Guam, American Samoa, the U.S. Virgin Islands, and the Trust Territory of the Pacific Islands.

* * * * *

Subpart B—[Amended]

13. Section 91.110 is amended by revising paragraph (b) to read as follows:

§ 91.110 Requirement of certification—prohibited controls.

* * * * *

(b) You may not design your engines with emission-control devices, systems, or elements of design that cause or contribute to an unreasonable risk to public health, welfare, or safety while operating. For example, this would apply if the engine emits a noxious or toxic substance it would otherwise not emit that contributes to such an unreasonable risk.

Subpart E—[Amended]

14. Section 91.419 is amended in paragraph (b) by revising the equations for M_{HCexh} and M_{exh} to read as follows:

§ 91.419 Raw emission sampling calculations.

* * * * *

(b) * * *

$M_{HCexh} = 12.01 + 1.008 \times \alpha$

* * * * *

$$M_{exh} = \frac{M_{HC_{exh}} \times WHC}{10^6} + \frac{28.01 \times WCO}{10^2} + \frac{44.1 \times WCO_2}{10^2} + \frac{46.01 \times WNO_x}{10^6} + \frac{2.016 \times WH_2}{10^2} + 18.01 \times (1 - K) + 28.01 \times \frac{\left[100 - \frac{WHC}{10^4} - WCO - WCO_2 - \frac{WNO_x}{10^4} - WH_2 - 100 \times (1 - K)\right]}{10^2}$$

* * * * *

Subpart G—[Amended]

15. Appendix A to Subpart G of part 91 is amended by revising Table 1 to read as follows:

Appendix A to Subpart G of Part 91—Sampling Plans for Selective Enforcement Auditing of Marine Engines

TABLE 1.—SAMPLING PLAN CODE LETTER

Annual engine family sales	Code letter
20–50	AA [1]

TABLE 1.—SAMPLING PLAN CODE LETTER—Continued

Annual engine family sales	Code letter
20–99	A [1]
100–299	B
300–499	C
500 or greater	D

[1] A manufacturer may optionally use either the sampling plan for code letter ''AA'' or sampling plan for code letter ''A'' for Selective Enforcement Audits of engine families with annual sales between 20 and 50 engines. Additional, the manufacturers may switch between these plans during the audit.

* * * * *

Subpart I—[Amended]

16. Section 91.803 is amended by revising paragraph (a) to read as follows:

§ 91.803 Manufacturer in-use testing program.

(a) EPA shall annually identify engine families and those configurations within families which the manufacturers must then subject to in-use testing. For each model year, EPA may identify the following number of engine families for testing, based on the number of the manufacturer's engine families to which this subpart is applicable produced in that model year:

(1) For manufactures with three or fewer engine families, EPA may identify a single engine family.

(2) For manufacturers with four or more engine families, EPA may identify a number of engine families that is no greater than twenty-five percent of the number of engine families to which this subpart is applicable that are produced by the manufacturer in that model year.

* * * * *

PART 94—CONTROL OF EMISSIONS FROM MARINE COMPRESSION-IGNITION ENGINES

17. The heading to part 94 is revised to read as set forth above.

18. The authority citation for part 94 continues to read as follows:

Authority: 42 U.S.C. 7522, 7523, 7524, 7525, 7541, 7542, 7543, 7545, 7547, 7549, 7550 and 7601(a).

Subpart A—[Amended]

19. Section 94.1 is revised to read as follows:

§ 94.1 Applicability.

(a) Except as noted in paragraphs (b) and (c) of this section, the provisions of this part apply to manufacturers (including post-manufacture marinizers and dressers), rebuilders, owners and operators of:

(1) Marine engines that are compression-ignition engines manufactured (or that otherwise become new) on or after January 1, 2004;

(2) Marine vessels manufactured (or that otherwise become new) on or after January 1, 2004 and which include a compression-ignition marine engine.

(b) Notwithstanding the provision of paragraph (c) of this section, the requirements and prohibitions of this part do not apply to three types of marine engines:

(1) Category 3 marine engines;

(2) Marine engines with rated power below 37 kW; or

(3) Marine engines on foreign vessels.

(c) The provisions of Subpart L of this part apply to everyone with respect to the engines identified in paragraph (a) of this section.

20. Section 94.2 is amended by revising paragraph (b) introductory text, removing the definition for ''Commercial marine engine'', revising definitions for ''Compression-ignition'', ''Designated officer'', ''Passenger'', ''Recreational marine engine'', ''Recreational vessel'', and ''United States'', and adding new definitions for ''Commercial'', ''Small-volume boat builder'', ''Small-volume manufacturer'', and ''Spark-ignition'' in alphabetical order to read as follows:

§ 94.2 Definitions.

* * * * *

(b) As used in this part, all terms not defined in this section shall have the meaning given them in the Act:

* * * * *

Commercial means relating to an engine or vessel that is not a recreational marine engine or a recreational vessel.

* * * * *

Compression-ignition means relating to an engine that is not a spark-ignition engine.

* * * * *

Designated Officer means the Manager, Engine Programs Group (6403–J), U.S. Environmental Protection Agency, 1200 Pennsylvania Ave., Washington, DC 20460.

* * * * *

Passenger has the meaning given by 46 U.S.C. 2101 (21) and (21a). In the context of commercial vessels, this generally means that a passenger is a person that pays to be on the vessel.

* * * * *

Recreational marine engine means a Category 1 propulsion marine engine that is intended by the manufacturer to be installed on a recreational vessel, and which is permanently labeled as follows: ''THIS ENGINE IS CATEGORIZED AS A RECREATIONAL MARINE ENGINE UNDER 40 CFR PART 94. INSTALLATION OF THIS ENGINE IN ANY NONRECREATIONAL VESSEL IS A VIOLATION OF FEDERAL LAW SUBJECT TO CIVIL PENALTY.''.

Recreational vessel has the meaning given in 46 U.S.C. 2101 (25), but excludes ''passenger vessels'' and ''small passenger vessels'' as defined by 46 U.S.C. 2101 (22) and (35) and excludes vessels used solely for competition. In general, for this part, ''recreational vessel'' means a vessel that is intended by the vessel manufacturer to be operated primarily for pleasure or leased, rented or chartered to another for the latter's pleasure, excluding the following vessels:

(1) Vessels of less than 100 gross tons that carry more than 6 passengers (as defined in this section).

(2) Vessels of 100 gross tons or more that carry one or more passengers (as defined in this section).

(3) Vessels used solely for competition.

* * * * *

Small-volume boat builder means a boat manufacturer with fewer than 500 employees and with annual U.S.-directed production of fewer than 100 boats. For manufacturers owned by a parent company, these limits apply to the combined production and number of employees of the parent company and all its subsidiaries.

Small-volume manufacturer means a manufacturer with annual U.S.-directed production of fewer than 1,000 internal combustion engines (marine and nonmarine). For manufacturers owned by a parent company, the limit applies to the production of the parent company and all its subsidiaries.

Spark-ignition means relating to a gasoline-fueled engine or other engines with a spark plug (or other sparking device) and with operating characteristics significantly similar to the theoretical Otto combustion cycle. Spark-ignition engines usually use a throttle to regulate intake air flow to control power during normal operation.

* * * * *

United States means the States, the District of Columbia, the Commonwealth of Puerto Rico, the Commonwealth of the Northern Mariana Islands, Guam, American Samoa, the U.S. Virgin Islands, and the Trust Territory of the Pacific Islands.

* * * * *

21. Section 94.7 is amended by revising paragraphs (c), (d), and (e) to read as follows:

§ 94.7 General standards and requirements.

* * * * *

(c) You may not design your engines with emission-control devices, systems, or elements of design that cause or contribute to an unreasonable risk to public health, welfare, or safety while operating. For example, this would apply if the engine emits a noxious or toxic substance it would otherwise not emit that contributes to such an unreasonable risk.

(d) All engines subject to the emission standards of this part shall be equipped with a connection in the engine exhaust system that is located downstream of the engine and before any point at which the exhaust contacts water (or any other cooling/scrubbing medium) for the temporary attachment of gaseous and/or particulate emission sampling equipment. This connection shall be internally threaded with standard pipe threads of a size not larger than one-half inch, and shall be closed by a pipe-plug when not in use. Equivalent connections are allowed. Engine manufacturers may comply with this requirement by providing vessel manufacturers with clear instructions explaining how to meet this requirement, and noting in the instructions that failure to comply may

invalidate a certificate and subject the vessel manufacturer to federal penalties.

(e) Electronically controlled engines subject to the emission standards of this part shall broadcast on engine's controller area networks engine torque (as percent of maximum torque at that speed) and engine speed.

22. Section 94.8 is amended by revising paragraphs (a), (e), (f) introductory text, and (f)(1) to read as follows:

§ 94.8 Exhaust emission standards.

(a) Exhaust emissions from marine compression-ignition engines shall not exceed the applicable exhaust emission standards contained in Table A–1 as follows:

TABLE A–1.—PRIMARY TIER 2 EXHAUST EMISSION STANDARDS (G/KW-HR)

Engine size liters/cylinder, rated power	Category	Model year[a]	THC+NO_X g/kW-hr	CO g/kW-hr	PM g/kW-hr
Disp. < 0.9 and power ≥ 37 kW	Category 1, Commercial	2005	7.5	5.0	0.40
	Category 1, Recreational	2007	7.5	5.0	0.40
0.9 ≤ disp. < 1.2 All power levels	Category 1, Commercial	2004	7.2	5.0	0.30
	Category 1, Recreational	2006	7.2	5.0	0.30
1.2 ≤ disp. < 2.5 All power levels	Category 1, Commercial	2004	7.2	5.0	0.20
	Category 1, Recreational	2006	7.2	5.0	0.20
2.5 ≤ disp. < 5.0 All power levels	Category 1, Commercial	2007	7.2	5.0	0.20
	Category 1, Recreational	2009	7.2	5.0	0.20
5.0 ≤ disp. < 15.0 All power levels	Category 2	2007	7.8	5.0	0.27
15.0 ≤ disp. < 20.0 Power < 3300 kW	Category 2	2007	8.7	5.0	0.50
15.0 ≤ disp. < 20.0 Power < 3300 kW	Category 2	2007	9.8	5.0	0.50
20.0 ≤ disp. < 25.0 All power levels	Category 2	2009	9.8	5.0	0.50
25.0 ≤ disp. < 30.0 All power levels	Category 2	2007	11.0	5.0	0.50

[a] The dates listed indicate the model years for which the specified standards start.

* * * * *

(e) Exhaust emissions from propulsion engines subject to the standards (or FELs) in paragraph (a), (c), or (f) of this section shall not exceed:

(1) *Commercial marine engines.* (i) 1.20 times the applicable standards (or FELs) when tested in accordance with the supplemental test procedures specified in § 94.106 at loads greater than or equal to 45 percent of the maximum power at rated speed or 1.50 times the applicable standards (or FELs) at loads less than 45 percent of the maximum power at rated speed.

(ii) As an option, the manufacturer may choose to comply with limits of 1.25 times the applicable standards (or FELs) when tested over the whole power range in accordance with the supplemental test procedures specified in § 94.106, instead of the limits in paragraph (e)(1)(i) of this section.

(2) *Recreational marine engines.* (i) 1.20 times the applicable standards (or FELs) when tested in accordance with the supplemental test procedures specified in § 94.106 at loads greater than or equal to 45 percent of the maximum power at rated speed and speeds less than 95 percent of maximum test speed, or 1.50 times the applicable standards (or FELs) at loads less than 45 percent of the maximum power at rated speed, or 1.50 times the applicable standards (or FELs) at any loads for speeds greater than or equal to 95 percent of the maximum test speed.

(ii) As an option, the manufacturer may choose to comply with limits of 1.25 times the applicable standards (or FELs) when tested over the whole power range in accordance with the supplemental test procedures specified in § 94.106, instead of the limits in paragraph (e)(2)(i) of this section.

(f) The following defines the requirements for low-emitting Blue Sky Series engines:

(1) *Voluntary standards.* Engines may be designated ''Blue Sky Series'' engines through the 2012 model year by meeting the voluntary standards listed in Table A–2, which apply to all certification and in-use testing, as follows:

TABLE A–2.—VOLUNTARY EMISSION STANDARDS (G/KW-HR)

Rated brake power (kW)	THC+NO_X	PM
Power ≥37 kW, and displ.<0.9	4.0	0.24
0.9≤displ.<1.2	4.0	0.18
1.2≤displ.<2.5	4.0	0.12
2.5≤displ.<5	5.0	0.12
5≤displ.<15	5.0	0.16
15 ≤disp.< 20, and power < 3300 kW	5.2	0.30
15 ≤disp.< 20, and power ≥ 3300 kW	5.9	0.30
20 ≤disp.< 25	5.9	0.30
25 ≤disp.< 30	6.6	0.30

* * * * *

23. Section 94.9 is amended by revising paragraphs (a) introductory text and (a)(1) to read as follows:

§ 94.9 Compliance with emission standards.

(a) The general standards and requirements in § 94.7 and the emission standards in § 94.8 apply to each new engine throughout its useful life period. The useful life is specified both in years and in hours of operation, and ends when either of the values (hours of operation or years) is exceeded.

(1) The minimum useful life is:

(i) 10 years or 1,000 hours of operation for recreational Category 1 engines;

(i) 10 years or 10,000 hours of operation for commercial Category 1 engines;

(iii) 10 years or 20,000 hours of operation for Category 2 engines.

* * * * *

24. Section 94.12 is amended by revising the introductory text and paragraphs (a), (b)(1), and (e) and adding new paragraphs (f) and (g) to read as follows:

§ 94.12 Interim provisions.

This section contains provisions that apply for a limited number of calendar years or model years. These provisions apply instead of the other provisions of this part.

(a) *Compliance date of standards.* Certain companies may delay compliance with emission standards. Companies wishing to take advantage of this provision must inform the Designated Officer of their intent to do so in writing before the date that compliance with the standards would otherwise be mandatory.

(1) Post-manufacture marinizers may elect to delay the model year of the Tier 2 standards for commercial engines as specified in § 94.8 by one year for each engine family.

(2) Small-volume manufacturers may elect to delay the model year of the Tier 2 standards for recreational engines as specified in § 94.8 by five years for each engine family.

(b) *Early banking of emission credits.* (1) A manufacturer may optionally certify engines manufactured before the date the Tier 2 standards take effect to earn emission credits under the averaging, banking, and trading program. Such optionally certified engines are subject to all provisions relating to mandatory certification and enforcement described in this part. Manufacturers may begin earning credits for recreational engines on December 9, 2002.

* * * * *

(e) *Compliance date of NTE requirements* (1) Notwithstanding the other provisions of this part, the requirements of § 94.8(e) for commercial marine engines start with 2010 model year engines for postmanufacture marinizers and 2007 model year engines for all other engine manufacturers.

(2) Notwithstanding the other provisions of this part, the requirements of § 94.8(e) for recreational marine engines start with 2012 model year engines for post-manufacture marinizers and 2009 model year engines for all other engine manufacturers.

(f) *Flexibility for small-volume boat builders.* Notwithstanding the other provisions of this part, manufacturers may sell uncertified recreational engines to small-volume boat builders during the first five years for which the emission standards in § 94.8 apply, subject to the following provisions:

(1) The U.S.-directed production volume of boats from any small-volume boat builder using uncertified engines during the total five-year period may not exceed 80 percent of the manufacturer's average annual production for the three years prior to the general applicability of the recreational engine standards in § 94.8, except as allowed in paragraph (f)(2) of this section.

(2) Small-volume boat builders may exceed the production limits in paragraph (f)(1) of this section, provided they do not exceed 20 boats during the five-year period or 10 boats in any single calendar year. This does not apply to boats powered by engines with displacement greater than 2.5 liters per cylinder.

(3) Small-volume boat builders must keep records of all the boats and engines produced under this paragraph (f), including boat and engine model numbers, serial numbers, and dates of manufacture. Records must also include information verifying compliance with the limits in paragraph (f)(1) or (f)(2) of this section. Keep these records until at least two full years after you no longer use the provisions in this paragraph (f).

(4) Manufacturers must add a permanent, legible label, written in block letters in English, to a readily visible part of each engine exempted under this paragraph (f). This label must include at least the following items:

(i) The label heading ''EMISSION CONTROL INFORMATION''.

(ii) Your corporate name and trademark.

(iii) Engine displacement (in liters), rated power, and model year of the engine or whom to contact for further information.

(iv) The statement ''THIS ENGINE IS EXEMPT UNDER 40 CFR 94.12(f) FROM EMISSION STANDARDS AND RELATED REQUIREMENTS.''.

(g) *Flexibility for engines over 560kW.* Notwithstanding the other provisions of this part, manufacturers may choose to delay certification of marine engines with less than 2.5 liters per cylinder and rated power above 560 kW, that are derived from a land-based nonroad engine with a rated power greater than 560 kW, if they do all of the following:

(1) Certify all of their applicable marine engines with less than 2.5 liters per cylinder and rated power above 560 kW to a NO_X standard of 6.4 g/kW-hr for model years 2008 through 2012.

(2) Notify EPA in writing before 2004 of their intent to use this provision. This notification must include a signed statement certifying that the manufacturer will comply with all the provisions of this paragraph (g).

(3) Add a permanent, legible label, written in block letters in English, to a readily visible part of each engine exempted under this paragraph (f). This label must include at least the following items:

(i) The label heading ''EMISSION CONTROL INFORMATION''.

(ii) Your corporate name and trademark.

(iii) Engine displacement (in liters), rated power, and model year of the engine or whom to contact for further information.

(iv) The statement ''THIS ENGINE IS EXEMPT UNDER 40 CFR 94.12(g) FROM EMISSION STANDARDS AND RELATED REQUIREMENTS.''.

Subpart B—[Amended]

25. Section 94.104 is amended by redesignating paragraph (c) as paragraph (d) and adding a new paragraph (c) to read as follows:

§ 94.104 Test procedures for Category 2 marine engines.

* * * * *

(c) Conduct testing at ambient temperatures from 13° C to 30° C.

* * * * *

26. Section 94.105 is amended by revising paragraph (b) text preceding Table B–1, revising ''#'' to read ''±'' in footnotes 1 and 2 in the tables in paragraphs (b), (c)(1), (c)(2), and (d)(1), and adding a new paragraph (e) to read as follows:

§ 94.105 Duty cycles.

* * * * *

(b) *General cycle.* Propulsion engines that are used with (or intended to be

used with) fixed-pitch propellers, and any other engines for which the other duty cycles of this section do not apply, shall be tested using the duty cycle described in the following Table B–1:

* * * * *

(e) *Recreational.* For the purpose of determining compliance with the emission standards of § 94.8, recreational engines shall be tested using the duty cycle described in Table B–5, which follows:

TABLE B–5.—RECREATIONAL MARINE DUTY CYCLE

Mode No.	Engine speed[1] (percent of maximum test speed)	Percent of maximum test power[2]	Minimum time in mode (minutes)	Weighting factors
1	100	100	5.0	0.08
2	91	75	5.0	0.13
3	80	50	5.0	0.17
4	63	25	5.0	0.32
5	idle	0	5.0	0.30

[1] Engine speed: ±2 percent of point.
[2] Power: ±2 percent of engine maximum value.

27. Section 94.106 is amended by revising paragraphs (b) introductory text, (b)(1) introductory text, (b)(2) introductory text, (b)(3) introductory text, and (b)(4) and adding a new paragraph (b)(5) to read as follows:

§ 94.106 Supplemental test procedures.

* * * * *

(b) The specified Not to Exceed Zones for marine engines are defined as follows. These Not to Exceed Zones apply, unless a modified zone is established under paragraph (c) of this section.

(1) For commercial Category 1 engines certified using the duty cycle specified in § 94.105(b), the Not to Exceed zones are defined as follows:

* * * * *

(2) For Category 2 engines certified using the duty cycle specified in § 94.105(b), the Not to Exceed zones are defined as follows:

* * * * *

(3) For engines certified using the duty cycle specified in § 94.105(c)(2), the Not to Exceed zones are defined as follows:

* * * * *

(4) For engines certified using the duty cycle specified in § 94.105(c)(1), the Not to Exceed zone is defined as any load greater than or equal to 25 percent of maximum power at rated speed, and any speed at which the engine operates in use.

(5) For recreational marine engines certified using the duty cycle specified in § 94.105(e), the Not to Exceed zones are defined as follows:

(i) The Not to Exceed zone is the region between the curves power = 1.15 × SPD^2 and power = 0.85 × SPD^4, excluding all operation below 25% of maximum power at rated speed and excluding all operation below 63% of maximum test speed.

(ii) This zone is divided into three subzones, one below 45% of maximum power at maximum test speed; one above 95% of maximum test speed; and a third area including all of the remaining area of the NTE zone.

(iii) SPD in paragraph (b)(5)(i) of this section refers to percent of maximum test speed.

(iv) See Figure B–4 for an illustration of this Not to Exceed zone as follows:

BILLING CODE 6560–50–P

Figure B-4

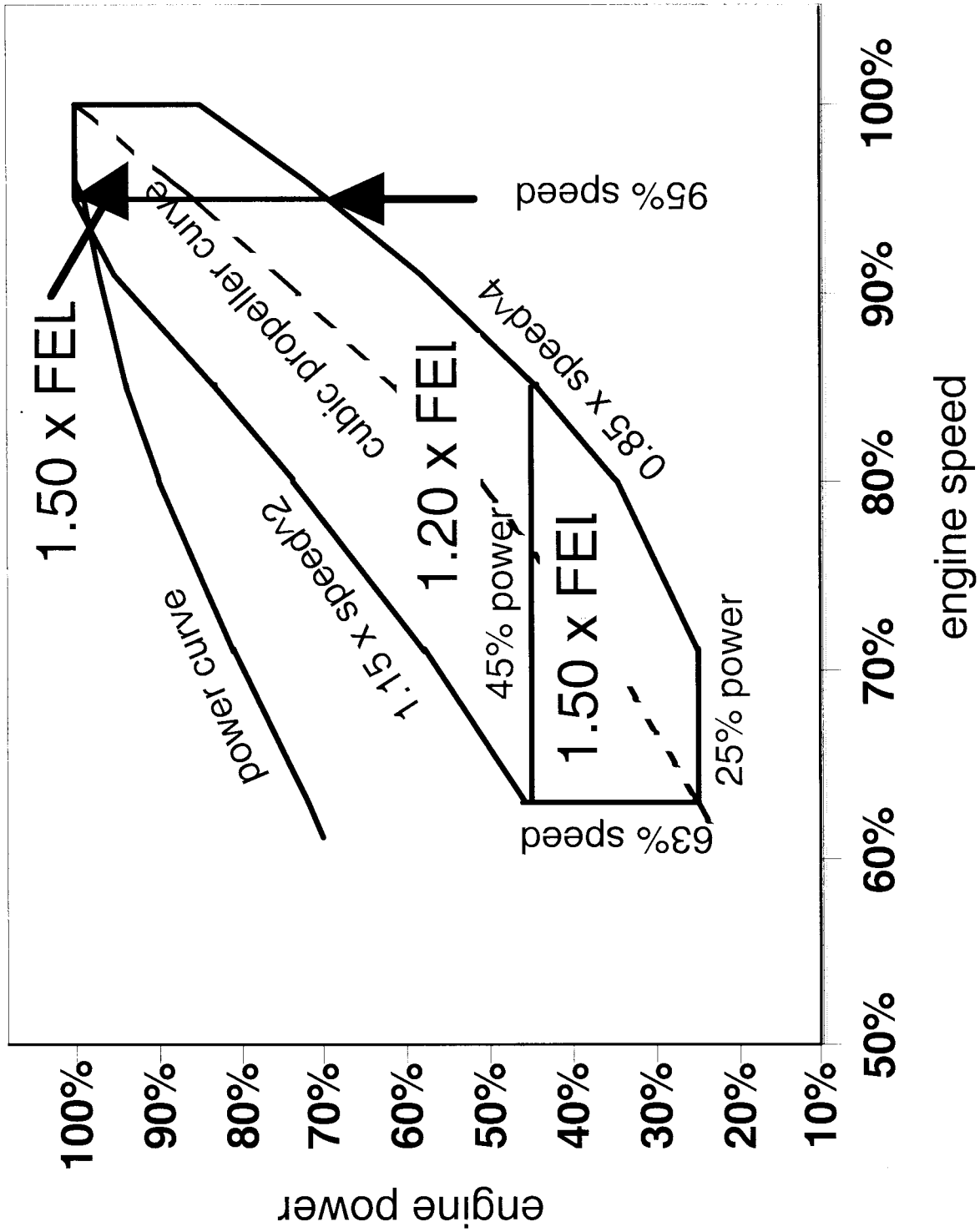

BILLING CODE 6560–50–C

28. Section 94.108 is amended in paragraph (a)(1) by revising footnote 1 in Table B–5 to read as follows:

§ 94.108 Test fuels.

(a) * * * (1) * * *

TABLE B–5.—FEDERAL TEST FUEL SPECIFICATIONS

* * * * * * *

[1] All ASTM procedures in this table have been incorporated by reference. See § 94.5.

* * * * * * *

* * * * *

Subpart C—[Amended]

29. Section 94.203 is amended by revising paragraphs (d)(14) and (d)(16) to read as follows:

§ 94.203 Application for certification.

* * * * *

(d) * * *

(14) A statement that all the engines included in the engine family comply with the Not To Exceed standards specified in § 94.8(e) when operated under all conditions which may reasonably be expected to be encountered in normal operation and use; the manufacturer also must provide a detailed description of all testing, engineering analyses, and other information which provides the basis for this statement.

* * * * *

(16) A statement indicating duty-cycle and application of the engine (e.g., used to propel planing vessels, use to propel vessels with variable-pitch propellers, constant-speed auxiliary, recreational, etc.).

* * * * *

30. Section 94.204 is amended by removing ''and'' at the end of paragraph (b)(9), adding ''; and'' at the end of paragraph (b)(10), adding a new paragraph (b)(11), and revising paragraph (e) to read as follows:

§ 94.204 Designation of engine families.

* * * * *

(b) * * *

(11) Class (commercial or recreational).

* * * * *

(e) Upon request by the manufacturer, the Administrator may allow engines that would be required to be grouped into separate engine families based on the criteria in paragraph (b) or (c) of this section to be grouped into a single engine family if the manufacturer demonstrates that the engines will have similar emission characteristics; however, recreational and commercial engines may not be grouped in the same engine family. This request must be accompanied by emission information supporting the appropriateness of such combined engine families.

31. Section 94.209 is revised to read as follows:

§ 94.209 Special provisions for post-manufacture marinizers and small-volume manufacturers.

(a) *Broader engine families.* Instead of the requirements of § 94.204, an engine family may consist of any engines subject to the same emission standards. This does not change any of the requirements of this part for showing that an engine family meets emission standards. To be eligible to use the provisions of this paragraph (a), the manufacturer must demonstrate one of the following:

(1) It is a post-manufacture marinizer and that the base engines used for modification have a valid certificate of conformity issued under 40 CFR part 89 or 40 CFR part 92 or the heavy-duty engine provisions of 40 CFR part 86.

(2) It is a small-volume manufacturer.

(b) *Hardship relief.* Post-manufacture marinizers, small-volume manufacturers, and small-volume boat builders may take any of the otherwise prohibited actions identified in § 94.1103(a)(1) if approved in advance by the Administrator, subject to the following requirements:

(1) Application for relief must be submitted to the Designated Officer in writing prior to the earliest date in which the applying manufacturer would be in violation of § 94.1103. The manufacturer must submit evidence showing that the requirements for approval have been met.

(2) The conditions causing the impending violation must not be substantially the fault of the applying manufacturer.

(3) The conditions causing the impending violation must jeopardize the solvency of the applying manufacturer if relief is not granted.

(4) The applying manufacturer must demonstrate that no other allowances under this part will be available to avoid the impending violation.

(5) Any relief may not exceed one year beyond the date relief is granted.

(6) The Administrator may impose other conditions on the granting of relief including provisions to recover the lost environmental benefit.

(7) The manufacturer must add a permanent, legible label, written in block letters in English, to a readily visible part of each engine exempted under this paragraph (b).

This label must include at least the following items:

(i) The label heading ''EMISSION CONTROL INFORMATION''.

(ii) Your corporate name and trademark.

(iii) Engine displacement (in liters), rated power, and model year of the engine or whom to contact for further information.

(iv) The statement ''THIS ENGINE IS EXEMPT UNDER 40 CFR 94.209(b) FROM EMISSION STANDARDS AND RELATED REQUIREMENTS.''.

(c) *Extension of deadlines.* Small-volume manufacturers may use the provisions of 40 CFR 1068.250 to ask for an extension of a deadline to meet emission standards. We may require that you use available base engines that have been certified to emission standards for land-based engines until you are able to produce engines certified to the requirements of this part.

32. Section 94.212 is amended by revising paragraph (b)(10) to read as follows:

§ 94.212 Labeling.

* * * * *

(b) *Engine labels.* * * *

(10) The application for which the engine family is certified. (For example: constant-speed auxiliary, variable-speed propulsion engines used with fixed-pitch propellers, recreational, etc.)

* * * * *

33. Section 94.218 is amended by adding a new paragraph (d)(2)(iv) to read as follows:

§ 94.218 Deterioration factor determination.

* * * * *

(d) * * *

(2) * * *

(iv) *Assigned deterioration factors.* Small-volume manufacturers may use deterioration factors established by EPA.

Subpart D—[Amended]

34. Section 94.304 is amended by revising paragraph (k) to read as follows:

§ 94.304 Compliance requirements.

* * * * *

(k) The following provisions limit credit exchanges between different types of engines:

(1) Credits generated by Category 1 engine families may be used for compliance by Category 1 or Category 2 engine families. Credits generated from Category 1 engine families for use by Category 2 engine families must be discounted by 25 percent.

(2) Credits generated by Category 2 engine families may be used for compliance only by Category 2 engine families.

(3) Credits may not be exchanged between recreational and commercial engines.

* * * * *

Subpart F—[Amended]

35. Section 94.501 is amended by revising paragraph (a) to read as follows:

§ 94.501 Applicability.

(a) The requirements of this subpart are applicable to manufacturers of engines subject to the provisions of

Subpart A of this part, excluding small-volume manufacturers.

* * * * *

36. Section 94.503 is amended by adding a new paragraph (d) to read as follows:

§ 94.503 General requirements.

* * * * *

(d) If you certify an engine family with carryover emission data, as described in § 94.206(c), and these equivalent engine families consistently pass the production-line testing requirements over the preceding two-year period, you may ask for a reduced testing rate for further production-line testing for that family. The minimum testing rate is one engine per engine family. If we reduce your testing rate, we may limit our approval to any number of model years. In determining whether to approve your request, we may consider the number of engines that have failed the emission tests.

Subpart J—[Amended]

37. Section 94.907 is amended by revising paragraphs (d) and (g) to read as follows:

§ 94.907 Engine dressing exemption.

* * * * *

(d) New marine engines that meet all the following criteria are exempt under this section:

(1) You must produce it by marinizing an engine covered by a valid certificate of conformity from one of the following programs:

(i) Heavy-duty highway engines (40 CFR part 86).

(ii) Land-based nonroad diesel engines (40 CFR part 89).

(iii) Locomotive engines (40 CFR part 92).

(2) The engine must have the label required under 40 CFR part 86, 89, or 92.

(3) You must not make any changes to the certified engine that could reasonably be expected to increase its emissions. For example, if you make any of the following changes to one of these engines, you do not qualify for the engine dressing exemption:

(i) Changing any fuel system parameters from the certified configuration.

(ii) Replacing an original turbocharger, except that small-volume manufacturers of recreational engines may replace an original turbocharger with one that matches the performance of the original turbocharger.

(iii) Modify or design the marine engine cooling or aftercooling system so that temperatures or heat rejection rates are outside the original engine manufacturer's specified ranges.

(4) You must make sure that fewer than 50 percent of the engine model's total sales, from all companies, are used in marine applications.

* * * * *

(g) If your engines do not meet the criteria listed in paragraphs (d)(2) through (d)(4) of this section, they will be subject to the standards and prohibitions of this part. Marinization without a valid exemption or certificate of conformity would be a violation of § 94.1103(a)(1) and/or the tampering prohibitions of the applicable land-based regulations (40 CFR part 86, 89, or 92).

* * * * *

Subpart L—[Amended]

38. Section 94.1103 is amended by revising paragraph (a)(5) to read as follows:

§ 94.1103 Prohibited acts.

(a) * * *

(5) For a manufacturer of marine vessels to distribute in commerce, sell, offer for sale, or deliver for introduction into commerce a new vessel containing an engine not covered by a certificate of conformity applicable for an engine model year the same as or later than the calendar year in which the manufacture of the new vessel is initiated. This prohibition covers improper installation in a manner such that the installed engine would not be covered by the engine manufacturer's certificate. Improper installation would include, but is not limited to, failure to follow the engine manufacturer's instructions related to engine cooling, exhaust aftertreatment, emission sampling ports, or any other emission-related component, parameter, or setting. In general, you may use up your normal inventory of engines not certified to new emission standards if they were built before the date of the new standards. However, we consider stockpiling of these engines to be a violation of paragraph (a)(1)(i)(A) of this section. (Note: For the purpose of this paragraph (a)(5), the manufacture of a vessel is initiated when the keel is laid, or the vessel is at a similar stage of construction.)

* * * * *

39. A new subchapter U is added to chapter I, consisting of parts 1048, 1051, 1065, and 1068, to read as follows:

SUBCHAPTER U—AIR POLLUTION CONTROLS

PART 1048—CONTROL OF EMISSIONS FROM NEW, LARGE NONROAD SPARK-IGNITION ENGINES

Subpart A—Determining How to Follow This Part

Sec.
1048.1 Does this part apply to me?
1048.5 Which engines are excluded or exempted from this part's requirements?
1048.10 What main steps must I take to comply with this part?
1048.15 Do any other regulation parts affect me?
1048.20 What requirements from this part apply to my excluded engines?

Subpart B—Emission Standards and Related Requirements

1048.101 What exhaust emission standards must my engines meet?
1048.105 What evaporative emissions standards and requirements apply?
1048.110 How must my engines diagnose malfunctions?
1048.115 What other requirements must my engines meet?
1048.120 What warranty requirements apply to me?
1048.125 What maintenance instructions must I give to buyers?
1048.130 What installation instructions must I give to equipment manufacturers?
1048.135 How must I label and identify the engines I produce?
1048.140 What are the provisions for certifying Blue Sky Series engines?
1048.145 What provisions apply only for a limited time?

Subpart C—Certifying Engine Families

1048.201 What are the general requirements for submitting a certification application?
1048.205 What must I include in my application?
1048.210 May I get preliminary approval before I complete my application?
1048.215 What happens after I complete my application?
1048.220 How do I amend the maintenance instructions in my application?
1048.225 How do I amend my application to include new or modified engines?
1048.230 How do I select engine families?
1048.235 What emission testing must I perform for my application for a certificate of conformity?
1048.240 How do I demonstrate that my engine family complies with exhaust emission standards?
1048.245 How do I demonstrate that my engine family complies with evaporative emission standards?
1048.250 What records must I keep and make available to EPA?
1048.255 When may EPA deny, revoke, or void my certificate of conformity?

Subpart D—Testing Production-line Engines

1048.301 When must I test my production-line engines?

1048.305 How must I prepare and test my production-line engines?
1048.310 How must I select engines for production-line testing?
1048.315 How do I know when my engine family fails the production-line testing requirements?
1048.320 What happens if one of my production-line engines fails to meet emission standards?
1048.325 What happens if an engine family fails the production-line requirements?
1048.330 May I sell engines from an engine family with a suspended certificate of conformity?
1048.335 How do I ask EPA to reinstate my suspended certificate?
1048.340 When may EPA revoke my certificate under this subpart and how may I sell these engines again?
1048.345 What production-line testing records must I send to EPA?
1048.350 What records must I keep?

Subpart E—Testing In-use Engines

1048.401 What testing requirements apply to my engines that have gone into service?
1048.405 How does this program work?
1048.410 How must I select, prepare, and test my in-use engines?
1048.415 What happens if in-use engines do not meet requirements?
1048.420 What in-use testing information must I report to EPA?
1048.425 What records must I keep?

Subpart F—Test Procedures

1048.501 What procedures must I use to test my engines?
1048.505 What steady-state duty cycles apply for laboratory testing?
1048.510 What transient duty cycles apply for laboratory testing?
1048.515 Field-testing procedures.

Subpart G—Compliance Provisions

1048.601 What compliance provisions apply to these engines?
1048.605 What are the provisions for exempting engines from the requirements of this part if they are already certified under the motor-vehicle program?
1048.610 What are the provisions for producing nonroad equipment with engines already certified under the motor-vehicle program?
1048.615 What are the provisions for exempting engines designed for lawn and garden applications?
1048.620 What are the provisions for exempting large engines fueled by natural gas?
1048.625 What special provisions apply to engines using noncommercial fuels?

Subpart H—[Reserved]

Subpart I—Definitions and Other Reference Information

1048.801 What definitions apply to this part?
1048.805 What symbols, acronyms, and abbreviations does this part use?
1048.810 What materials does this part reference?
1048.815 How should I request EPA to keep my information confidential?
1048.820 How do I request a hearing?
Appendix I to Part 1048—Large Spark-ignition (SI) Transient Cycle for Constant-Speed Engines
Appendix II to Part 1048—Large Spark-ignition (SI) Composite Transient Cycle

Authority: 42 U.S.C. 7401–7671(q).

Subpart A—Determining How to Follow This Part

§ 1048.1 Does this part apply to me?

(a) This part applies to you if you manufacture or import new, spark-ignition, nonroad engines (defined in § 1048.801) with maximum brake power above 19 kW, unless we exclude them under § 1048.5. See § 1048.20 for the requirements that apply to excluded engines.

(b) If you manufacture or import engines with maximum brake power at or below 19 kW that would otherwise be covered by 40 CFR part 90, you may choose to meet the requirements of this part instead. In this case, all the provisions of this part apply for those engines.

(c) As noted in subpart G of this part, 40 CFR part 1068 applies to everyone, including anyone who manufactures, installs, owns, operates, or rebuilds any of the engines this part covers or equipment containing these engines.

(d) You need not follow this part for engines you produce before January 1, 2004, unless you certify voluntarily. See §§ 1048.101 through 1048.115 and § 1048.145 and the definition of model year in § 1048.801 for more information about the timing of new requirements.

(e) See §§ 1048.801 and 1048.805 for definitions and acronyms that apply to this part. The definition section contains significant regulatory provisions and it is very important that you read them.

§ 1048.5 Which engines are excluded or exempted from this part's requirements?

(a) This part does not apply to the following nonroad engines:

(1) Engines certified to meet the requirements of 40 CFR part 1051 (for example, engines used in snowmobiles and all-terrain vehicles).

(2) Propulsion marine engines. See 40 CFR part 91. This part applies with respect to auxiliary marine engines.

(b) See subpart G of this part and 40 CFR part 1068, subpart C, for exemptions of specific engines.

(c) Send the Designated Officer a written request if you want us to determine whether this part covers or excludes certain engines. Excluding engines from this part's requirements does not affect other requirements that may apply to them.

Note: See 40 CFR part 87 for engines used in aircraft.)

(d) As defined in § 1048.801, stationary engines are not required to comply with this part (because they are not nonroad engines), except that you must meet the requirements in § 1048.20. In addition, the prohibitions in 40 CFR 1068.101 restrict the use of stationary engines for non-stationary purposes.

§ 1048.10 What main steps must I take to comply with this part?

(a) You must have a certificate of conformity from us for each engine family before you do any of the following with a new nonroad engine covered by this part: sell, offer for sale, introduce into commerce, distribute or deliver for introduction into commerce, or import it into the United States. ''New'' engines may include some already placed in service (see the definition of ''new nonroad engine'' and ''new nonroad equipment'' in § 1048.801). You must get a new certificate of conformity for each new model year.

(b) To get a certificate of conformity and comply with its terms, you must do six things:

(1) Meet the emission standards and other requirements in subpart B of this part.

(2) Perform preproduction emission tests.

(3) Apply for certification (see subpart C of this part).

(4) Do routine emission testing on production engines as required by subpart D of this part.

(5) Do emission testing on in-use engines, as we direct under subpart E of this part.

(6) Follow our instructions throughout this part.

(c) Subpart F of this part describes how to test your engines (including references to other parts).

(d) Subpart G of this part and 40 CFR part 1068 describe requirements and prohibitions that apply to engine manufacturers, equipment manufacturers, owners, operators, rebuilders, and all others.

§ 1048.15 Do any other regulation parts affect me?

(a) Part 1065 of this chapter describes procedures and equipment specifications for testing engines. Subpart F of this part describes how to apply the provisions of part 1065 of this chapter to show you meet the emission standards in this part.

(b) Part 1068 of this chapter describes general provisions, including these seven areas:

(1) Prohibited acts and penalties for engine manufacturers, equipment manufacturers, and others.

(2) Rebuilding and other aftermarket changes.

(3) Exclusions and exemption for certain engines.

(4) Importing engines.

(5) Selective enforcement audits of your production.

(6) Defect reporting and recall.

(7) Procedures for hearings.

(c) Other parts of this chapter affect you if referenced in this part.

§ 1048.20 What requirements from this part apply to my excluded engines?

(a) Engine manufacturers producing an engine excluded under § 1048.5(d) must add a permanent label or tag identifying each engine. This applies equally to importers. To meet labeling requirements, you must do the following things:

(1) Attach the label or tag in one piece so no one can remove it without destroying or defacing it.

(2) Make sure it is durable and readable for the engine's entire life.

(3) Secure it to a part of the engine needed for normal operation and not normally requiring replacement.

(4) Write it in block letters in English.

(5) Instruct equipment manufacturers that they must place a duplicate label as described in 40 CFR 1068.105 if they obscure the engine's label.

(b) Engine labels or tags required under this section must have the following information:

(1) Include the heading ''Emission Control Information''.

(2) Include your full corporate name and trademark.

(3) State the engine displacement (in liters) and maximum brake power.

(4) State: ''THIS ENGINE IS EXCLUDED FROM THE REQUIREMENTS OF 40 CFR PART 1048 AS A ''STATIONARY ENGINE.'' INSTALLING OR USING THIS ENGINE IN ANY OTHER APPLICATION MAY BE A VIOLATION OF FEDERAL LAW SUBJECT TO CIVIL PENALTY.''.

Subpart B—Emission Standards and Related Requirements

§ 1048.101 What exhaust emission standards must my engines meet?

Apply the exhaust emission standards in this section by model year. You may choose to certify engines earlier than we require. The Tier 1 standards apply only to steady-state testing, as described in paragraph (b) of this section. The Tier 2 standards apply to steady-state, transient, and field testing, as described in paragraphs (a), (b), and (c) of this section.

(a) *Standards for transient testing.* Starting in the 2007 model year, Tier 2 exhaust emission standards apply for transient measurement of emissions with the duty-cycle test procedures in subpart F of this part:

(1) The Tier 2 $HC+NO_X$ standard is 2.7 g/kW-hr and the Tier 2 CO standard is 4.4 g/kW-hr. For severe-duty engines, the Tier 2 $HC+NO_X$ standard is 2.7 g/kW-hr and the Tier 2 CO standard is 130.0 g/kW-hr. The standards in this paragraph (a) do not apply for transient testing of high-load engines.

(2) You may optionally certify your engines according to the following formula instead of the standards in paragraph (a)(1) of this section: $(HC+NO_X) \times CO^{0.784} \leq 8.57$. The $HC+NO_X$ and CO emission levels you select to satisfy this formula, rounded to the nearest 0.1 g/kW-hr, become the emission standards that apply for those engines. You may not select an $HC+NO_X$ emission standard higher than 2.7 g/kW-hr or a CO emission standard higher than 20.6 g/kW-hr. The following table illustrates a range of possible values under this paragraph (a)(2):

TABLE 1 OF § 1048.101.—EXAMPLES OF POSSIBLE TIER 2 DUTY-CYCLE EMISSION STANDARDS

$HC+NO_X$ (g/kW-hr)	CO (g/kW-hr)
2.7	4.4
2.2	5.6
1.7	7.9
1.3	11.1
1.0	15.5
0.8	20.6

(b) *Standards for steady-state testing.* Except as we allow in paragraph (d) of this section, the following exhaust emission standards apply for steady-state measurement of emissions with the duty-cycle test procedures in subpart F of this part:

(1) The following table shows the Tier 1 exhaust emission standards that apply to engines from 2004 through 2006 model years:

TABLE 2 OF § 1048.101.—TIER 1 EMISSION STANDARDS (G/KW-HR)

Testing	General emission standards		Alternate emission standards for severe-duty engines	
	$HC+NO_X$	CO	$HC+NO_X$	CO
Certification and production-line testing	4.0	50.0	4.0	130.0
In-use testing	5.4	50.0	5.4	130.0

(2) Starting in the 2007 model year, engines must meet the Tier 2 exhaust emission standards in paragraph (a) of this section for both steady-state and transient testing. See paragraph (d) of this section for alternate standards that apply for certain engines.

(c) *Standards for field testing.* Starting in 2007, the following Tier 2 exhaust emission standards apply for emission measurements with the field-testing procedures in subpart F of this part:

(1) The $HC+NO_X$ standard is 3.8 g/kW-hr and the CO standard is 6.5 g/kW-hr. For severe-duty engines, the $HC+NO_X$ standard is 3.8 g/kW-hr and the CO standard is 200.0 g/kW-hr. For natural gas-fueled engines, you are not required to measure nonmethane hydrocarbon emissions or total hydrocarbon emissions for testing to show that the engine meets the emission standards of this paragraph (c); that is, you may assume HC emissions are equal to zero.

(2) You may apply the following formula to determine alternate emission standards that apply to your engines instead of the standards in paragraph (c)(1) of this section: $(HC+NO_X) \times CO^{0.791} \leq 16.78$. $HC+NO_X$ emission levels may not exceed 3.8 g/kW-hr and CO emission levels may not exceed 31.0 g/kW-hr. The following table illustrates a range of possible values under this paragraph (c)(2):

TABLE 3 OF § 1048.101.—EXAMPLES OF POSSIBLE TIER 2 FIELD-TESTING EMISSION STANDARDS

$HC+NO_X$ (g/kW-hr)	CO (g/kW-hr)
3.8	6.5
3.1	8.5
2.4	11.7
1.8	16.8
1.4	23.1
1.1	31.0

(d) *Engine protection.* For engines that require enrichment at high loads to protect the engine, you may ask to meet alternate Tier 2 standards of 2.7 g/kW-hr for $HC+NO_X$ and 31.0 g/kW-hr for CO instead of the emission standards described in paragraph (b)(2) of this section for steady-state testing. If we approve your request, you must still meet the transient testing standards in paragraph (a) of this section and the field-testing standards in paragraph (c) of this section. To qualify for this allowance, you must do all the following things:

(1) Show that enrichment is necessary to protect the engine from damage.

(2) Show that you limit enrichment to operating modes that require additional cooling to protect the engine from damage.

(3) Show in your application for certification that enrichment will rarely occur in use in the equipment in which your engines are installed. For example, an engine that is expected to operate 5 percent of the time in use with enrichment would clearly not qualify.

(4) Include in your installation instructions any steps necessary for someone installing your engines to prevent enrichment during normal operation (see § 1048.130).

(e) *Fuel types.* Apply the exhaust emission standards in this section for engines using each type of fuel specified in 40 CFR part 1065, subpart C, for which they are designed to operate. You must meet the numerical emission standards for hydrocarbons in this section based on the following types of hydrocarbon emissions for engines powered by the following fuels:

(1) Gasoline- and LPG-fueled engines: THC emissions.

(2) Natural gas-fueled engines: NMHC emissions.

(3) Alcohol-fueled engines: THCE emissions.

(f) *Small engines.* Certain engines with total displacement at or below 1000 cc may comply with the requirements of 40 CFR part 90 instead of complying with the requirements of this part, as described in § 1048.615.

(g) *Useful life.* Your engines must meet the exhaust emission standards in paragraphs (a) through (c) of this section over their full useful life (§ 1048.240 describes how to use deterioration factors to show this). The minimum useful life is 5,000 hours of operation or seven years, whichever comes first.

(1) Specify a longer useful life in hours for an engine family under either of two conditions:

(i) If you design, advertise, or market your engine to operate longer than the minimum useful life (your recommended hours until rebuild may indicate a longer design life).

(ii) If your basic mechanical warranty is longer than the minimum useful life.

(2) You may request a shorter useful life for an engine family if you have documentation from in-use engines showing that these engines will rarely operate longer than the alternate useful life. The useful life value may not be shorter than any of the following:

(i) 1,000 hours of operation.

(ii) Your recommended overhaul interval.

(iii) Your mechanical warranty for the engine.

(h) *Applicability for testing.* The standards in this subpart apply to all testing, including production-line and in-use testing, as described in subparts D and E of this part.

§ 1048.105 What evaporative emissions standards and requirements apply?

(a) Starting in the 2007 model year, engines that run on a volatile liquid fuel (such as gasoline), must meet the following evaporative emissions standards and requirements:

(1) Evaporative hydrocarbon emissions may not exceed 0.2 grams per gallon of fuel tank capacity when measured with the test procedures for evaporative emissions in subpart F of this part.

(2) For nonmetallic fuel lines, you must specify and use products that meet the Category 1 specifications in SAE J2260 (incorporated by reference in § 1048.810).

(3) Liquid fuel in the fuel tank may not reach boiling during continuous engine operation in the final installation at an ambient temperature of 30° C. Note that gasoline with a Reid vapor pressure of 62 kPa (9 psi) begins to boil at about 53° C.

(b) Note that § 1048.245 allows you to use design-based certification instead of generating new emission data.

(c) If other companies install your engines in their equipment, give them any appropriate instructions, as described in § 1048.130.

§ 1048.110 How must my engines diagnose malfunctions?

(a) *Equip your engines with a diagnostic system.* Starting in the 2007 model year, equip each engine with a diagnostic system that will detect significant malfunctions in its emission-control system using one of the following protocols:

(1) If your emission-control strategy depends on maintaining air-fuel ratios at stoichiometry, an acceptable diagnostic design would identify malfunction whenever the air-fuel ratio does not cross stoichiometry for one minute of intended closed-loop operation. You may use other diagnostic strategies if we approve them in advance.

(2) If the protocol described in paragraph (a)(1) of this section does not apply to your engine, you must use an alternative approach that we approve in advance. Your alternative approach must generally detect when the emission-control system is not functioning properly.

(b) *Use a malfunction-indicator light (MIL).* The MIL must be readily visible to the operator; it may be any color except red. When the MIL goes on, it must display ''Check Engine,'' ''Service Engine Soon,'' or a similar message that we approve. You may use sound in addition to the light signal. The MIL must go on under each of these circumstances:

(1) When a malfunction occurs, as described in paragraph (a) of this section.

(2) When the diagnostic system cannot send signals to meet the requirement of paragraph (b)(1) of this section.

(3) When the engine's ignition is in the ''key-on'' position before starting or cranking. The MIL should go out after engine starting if the system detects no malfunction.

(c) *Control when the MIL can go out.* If the MIL goes on to show a malfunction, it must remain on during all later engine operation until servicing corrects the malfunction. If the engine is not serviced, but the malfunction does not recur for three consecutive engine starts during which the malfunctioning system is evaluated and found to be working properly, the MIL may stay off during later engine operation.

(d) *Store trouble codes in computer memory.* Record and store in computer memory any diagnostic trouble codes showing a malfunction that should illuminate the MIL. The stored codes must identify the malfunctioning system or component as uniquely as possible. Make these codes available through the data link connector as described in

paragraph (g) of this section. You may store codes for conditions that do not turn on the MIL. The system must store a separate code to show when the diagnostic system is disabled (from malfunction or tampering).

(e) *Make data, access codes, and devices accessible.* Make all required data accessible to us without any access codes or devices that only you can supply. Ensure that anyone servicing your engine can read and understand the diagnostic trouble codes stored in the onboard computer with generic tools and information.

(f) *Consider exceptions for certain conditions.* Your diagnostic systems may disregard trouble codes for the first three minutes after engine starting. You may ask us to approve diagnostic-system designs that disregard trouble codes under other conditions that would produce an unreliable reading, damage systems or components, or cause other safety risks. This might include operation at altitudes over 8,000 feet.

(g) *Follow standard references for formats, codes, and connections.* Follow conventions defined in the following documents (incorporated by reference in § 1048.810) or ask us to approve using updated versions of (or variations from) these documents:

(1) ISO 9141–2 Road vehicles-Diagnostic systems—Part 2: CARB requirements for interchange of digital information, February 1994.

(2) ISO 14230–4 Road vehicles—Diagnostic systems—Keyword Protocol 2000—Part 4: Requirements for emission-related systems, June 2000.

§ 1048.115 What other requirements must my engines meet?

Your engines must meet the following requirements:

(a) *Closed crankcase.* Your engines may not vent crankcase emissions into the atmosphere throughout their useful life, with the following exception: your engines may vent crankcase emissions if you measure and include these crankcase emissions with all measured exhaust emissions.

(b) *Torque broadcasting.* Electronically controlled engines must broadcast their speed and output shaft torque (in newton-meters) on their controller area networks. Engines may alternatively broadcast a surrogate value for torque that can be read with a remote device. This information is necessary for testing engines in the field (see 40 CFR 1065.515). This requirement applies beginning in the 2007 model year. Small-volume engine manufacturers may omit this requirement.

(c) *EPA access to broadcast information.* If we request it, you must provide us any hardware or tools we would need to readily read, interpret, and record all information broadcast by an engine's on-board computers and electronic control modules. If you broadcast a surrogate parameter for torque values, you must provide us what we need to convert these into torque units. We will not ask for hardware or tools if they are readily available commercially.

(d) *Emission sampling capability.* Produce all your engines to allow sampling of exhaust emissions in the field without damaging the engine or equipment. Show in your application for certification how this can be done in a way that prevents diluting the exhaust sample with ambient air. To do this, you might simply allow for extending the exhaust pipe by 20 cm; you might also install exhaust ports downstream of any aftertreatment devices.

(e) *Adjustable parameters.* Engines that have adjustable parameters must meet all the requirements of this part for any adjustment in the physically adjustable range.

(1) We do not consider an operating parameter adjustable if you permanently seal it or if ordinary tools cannot readily access it.

(2) We may require that you set adjustable parameters to any specification within the adjustable range during certification testing, production-line testing, selective enforcement auditing, or any in-use testing.

(f) *Prohibited controls.* You may not design your engines with emission-control devices, systems, or elements of design that cause or contribute to an unreasonable risk to public health, welfare, or safety while operating. For example, this would apply if the engine emits a noxious or toxic substance it would otherwise not emit that contributes to such an unreasonable risk.

(g) *Defeat devices.* You may not equip your engines with a defeat device. A defeat device is an auxiliary emission-control device that reduces the effectiveness of emission controls under conditions you may reasonably expect the engine to encounter during normal operation and use. This does not apply to auxiliary emission-control devices you identify in your certification application if any of the following is true:

(1) The conditions of concern were substantially included in your prescribed duty cycles.

(2) You show your design is necessary to prevent catastrophic engine (or equipment) damage or accidents.

(3) The reduced effectiveness applies only to starting the engine.

§ 1048.120 What warranty requirements apply to me?

(a) *General requirements.* You must warrant to the ultimate buyer that the new nonroad engine meets two conditions:

(1) It is designed, built, and equipped it to conform at the time of sale with the requirements of this part.

(2) It is free from defects in materials and workmanship that may keep it from meeting these requirements.

(b) *Warranty period.* Your emission-related warranty must be valid for at least 50 percent of the engine's useful life in hours of operation or at least three years, whichever comes first. In the case of a high-cost warranted part, the warranty must be valid for at least 70 percent of the engine's useful life in hours of operation or at least five years, whichever comes first. You may offer an emission-related warranty more generous than we require. This warranty may not be shorter than any published or negotiated warranty you offer for the engine or any of its components. If an engine has no hour meter, we base the warranty periods in this paragraph (b) only on the engine's age (in years).

(c) *Components covered.* The emission-related warranty must cover components whose failure would increase an engine's emissions, including electronic controls, fuel injection (for liquid or gaseous fuels), exhaust-gas recirculation, aftertreatment, or any other system you develop to control emissions. We generally consider replacing or repairing other components to be the owner's responsibility.

(d) *Scheduled maintenance.* You may schedule emission-related maintenance for a component named in paragraph (c) of this section, subject to the restrictions of § 1048.125. You are not required to cover this scheduled maintenance under your warranty if the component meets either of the following criteria:

(1) The component was in general use on similar engines, and was subject to scheduled maintenance, before January 1, 2000.

(2) Failure of the component would clearly degrade the engine's performance enough that the operator would need to repair or replace it.

(e) *Limited applicability.* You may deny warranty claims under this section if the operator caused the problem, as described in 40 CFR 1068.115.

(f) *Aftermarket parts.* As noted 40 CFR 1068.101, it is a violation of the Act to manufacture an engine part if one of its main effects is to reduce the

effectiveness of the engine's emission controls. If you make an aftermarket part, you may—but do not have to—certify that using the part will still allow engines to meet emission standards, as described in 40 CFR 85.2114.

§ 1048.125 What maintenance instructions must I give to buyers?

Give the ultimate buyer of each new nonroad engine written instructions for properly maintaining and using the engine, including the emission-control system. The maintenance instructions also apply to service accumulation on your test engines, as described in 40 CFR part 1065, subpart E.

(a) *Critical emission-related maintenance*. Critical emission-related maintenance includes any adjustment, cleaning, repair, or replacement of air-induction, fuel-system, or ignition components, aftertreatment devices, exhaust gas recirculation systems, crankcase ventilation valves, sensors, or electronic control units. This may also include any other component whose only purpose is to reduce emissions or whose failure will increase emissions without significantly degrading engine performance. You may schedule critical emission-related maintenance on these components if you meet the following conditions:

(1) You may ask us to approve critical emission-related maintenance only if it meets two criteria:

(i) Operators are reasonably likely to do the maintenance you call for.

(ii) Engines need the maintenance to meet emission standards.

(2) We will accept scheduled maintenance as reasonably likely to occur in use if you satisfy any of four conditions:

(i) You present data showing that, if a lack of maintenance increases emissions, it also unacceptably degrades the engine's performance.

(ii) You present survey data showing that 80 percent of engines in the field get the maintenance you specify at the recommended intervals.

(iii) You provide the maintenance free of charge and clearly say so in maintenance instructions for the customer.

(iv) You otherwise show us that the maintenance is reasonably likely to be done at the recommended intervals.

(3) You may not schedule critical emission-related maintenance more frequently than the following intervals, except as specified in paragraph (a)(4) of this section:

(i) For catalysts, fuel injectors, electronic control units, superchargers, and turbochargers: the useful life of the engine family.

(ii) For gaseous fuel-system components (cleaning without disassembly only) and oxygen sensors: 2,500 hours.

(4) If your engine family has an alternate useful life shorter than the period specified in paragraph (a)(3)(ii) of this section, you may not schedule maintenance on those components more frequently than the alternate useful life (*see* § 1048.101(g)).

(b) *Recommended additional maintenance*. You may recommend any additional amount of maintenance on the components listed in paragraph (a) of this section, as long as you make clear that these maintenance steps are not necessary to keep the emission-related warranty valid. If operators do the maintenance specified in paragraph (a) of this section, but not the recommended additional maintenance, this does not allow you to disqualify them from in-use testing or deny a warranty claim.

(c) *Special maintenance*. You may specify more frequent maintenance to address problems related to special situations such as substandard fuel or atypical engine operation. For example, you may specify more frequent cleaning of fuel system components for engines you have reason to believe will be using fuel that causes substantially more engine performance problems than commercial fuels of the same type that are generally available across the United States.

(d) *Noncritical emission-related maintenance*. For engine parts not listed in paragraph (a) of this section, you may schedule any amount of emission-related inspection or maintenance. But you must state clearly that these steps are not necessary to keep the emission-related warranty valid. Also, do not take these inspection or maintenance steps during service accumulation on your test engines.

(e) *Maintenance that is not emission-related*. For maintenance unrelated to emission controls, you may schedule any amount of inspection or maintenance. You may also take these inspection or maintenance steps during service accumulation on your test vehicles or engines. This might include adding engine oil or changing air, fuel, or oil filters.

(f) *Source of parts and repairs*. Print clearly on the first page of your written maintenance instructions that any repair shop or person may maintain, replace, or repair emission-control devices and systems. Your instructions may not require components or service identified by brand, trade, or corporate name. Also, do not directly or indirectly condition your warranty on a requirement that the vehicle be serviced by your franchised dealers or any other service establishments with which you have a commercial relationship. You may disregard the requirements in this paragraph (f) if you do one of two things:

(1) Provide a component or service without charge under the purchase agreement.

(2) Get us to waive this prohibition in the public's interest by convincing us the engine will work properly only with the identified component or service.

§ 1048.130 What installation instructions must I give to equipment manufacturers?

(a) If you sell an engine for someone else to install in a piece of nonroad equipment, give the buyer of the engine written instructions for installing it consistent with the requirements of this part. Include all information necessary to ensure that engines installed this way will meet emission standards.

(b) Make sure these instructions have the following information:

(1) Include the heading: ''Emission-related installation instructions''.

(2) State: ''Failing to follow these instructions when installing a certified engine in a piece of nonroad equipment violates federal law (40 CFR 1068.105(b)), subject to fines or other penalties as described in the Clean Air Act.''.

(3) Describe any other instructions needed to install an exhaust aftertreatment device and to locate exhaust sampling ports consistent with your application for certification.

(4) Describe the steps needed to control evaporative emissions, as described in §§ 1048.105 and 1048.245.

(5) Describe any necessary steps for installing the diagnostic system described in § 1048.110.

(6) Describe any limits on the range of applications needed to ensure that the engine operates consistently with your application for certification. For example, if your engines are certified only for constant-speed operation, tell equipment manufacturers not to install the engines in variable-speed applications. Also, if you need to avoid sustained high-load operation to meet the field-testing emission standards we specify in § 1048.101(c) or to comply with the provisions of § 1048.101(d), describe how the equipment manufacturer must properly size the engines for a given application.

(7) Describe any other instructions to make sure the installed engine will operate according to design specifications in your application for certification.

(8) State: ''If you install the engine in a way that makes the engine's emission

control information label hard to read during normal engine maintenance, you must place a duplicate label on the vehicle, as described in 40 CFR 1068.105.''.

(c) You do not need installation instructions for engines you install in your own equipment.

§ 1048.135 How must I label and identify the engines I produce?

(a) Assign each production engine a unique identification number and permanently and legibly affix, engrave, or stamp it on the engine.

(b) At the time of manufacture, add a permanent emission control information label identifying each engine. To meet labeling requirements, do four things:

(1) Attach the label in one piece so it is not removable without being destroyed or defaced.

(2) Design and produce it to be durable and readable for the engine's entire life.

(3) Secure it to a part of the engine needed for normal operation and not normally requiring replacement.

(4) Write it in block letters in English.

(c) On your engine's emission control information label, do 13 things:

(1) Include the heading ''EMISSION CONTROL INFORMATION''.

(2) Include your full corporate name and trademark.

(3) State: ''THIS ENGINE IS CERTIFIED TO OPERATE ON [specify operating fuel or fuels].''.

(4) Identify the emission-control system; your identifiers must use names and abbreviations consistent with SAE J1930 (incorporated by reference in § 1048.810).

(5) List all requirements for fuel and lubricants.

(6) State the date of manufacture (DAY (optional), MONTH, and YEAR); if you stamp this information on the engine and print it in the owner's manual, you may omit it from the emission control information label.

(7) State: ''THIS ENGINE MEETS U.S. ENVIRONMENTAL PROTECTION AGENCY REGULATIONS FOR (MODEL YEAR) LARGE NONROAD SI ENGINES.''.

(8) Include EPA's standardized designation for the engine family (and subfamily, where applicable).

(9) State the engine's displacement (in liters) and maximum brake power.

(10) State the engine's useful life (see § 1048.101(g)).

(11) List specifications and adjustments for engine tuneups; show the proper position for the transmission during tuneup and state which accessories should be operating.

(12) Describe other information on proper maintenance and use.

(13) Identify the emission standards to which you have certified the engine.

(d) Some of your engines may need more information on the emission control information label.

(1) If you have an engine family that has been certified only for constant-speed engines, add to the engine label ''CONSTANT-SPEED ONLY''.

(2) If you have an engine family that has been certified only for variable-speed engines, add to the engine label ''VARIABLE-SPEED ONLY''.

(3) If you have an engine family that has been certified only for high-load engines, add to the engine label ''THIS ENGINE IS NOT INTENDED FOR OPERATION AT LESS THAN 75 PERCENT OF FULL LOAD.''.

(4) If you certify an engine to the voluntary standards in § 1048.140, add to the engine label ''BLUE SKY SERIES''.

(5) If you produce an engine we exempt from the requirements of this part, see subpart G of this part and 40 CFR part 1068, subparts C and D, for more label information.

(6) If you certify an engine family under § 1048.101(d) (and show in your application for certification that in-use engines will experience infrequent high-load operation), add to the engine label ''THIS ENGINE IS NOT INTENDED FOR OPERATION AT MORE THAN __ PERCENT OF FULL LOAD.''. Specify the appropriate percentage of full load based on the nature of the engine protection. You may add other statements to discourage operation in engine-protection modes.

(e) Some engines may not have enough space for an emission control information label with all the required information. In this case, you may omit the information required in paragraphs (c)(3), (c)(4), (c)(5), and (c)(12) of this section if you print it in the owner's manual instead.

(f) If you are unable to meet these labeling requirements, you may ask us to modify them consistent with the intent of this section.

§ 1048.140 What are the provisions for certifying Blue Sky Series engines?

This section defines voluntary standards for a recognized level of superior emission control for engines designated as ''Blue Sky Series'' engines. Blue Sky Series engines must meet one of the following standards:

(a) For the 2003 model year, to receive a certificate of conformity, a ''Blue Sky Series'' engine family must meet all the requirements in this part that apply to 2004 model year engines. This includes all testing and reporting requirements.

(b) For the 2003 through 2006 model years, to receive a certificate of conformity, a ''Blue Sky Series'' engine family must meet all the requirements in this part that apply to 2007 model year engines. This includes all testing and reporting requirements.

(c) For any model year, to receive a certificate of conformity as a ''Blue Sky Series'' engine family must meet all the requirements in this part, while certifying to the following exhaust emission standards:

(1) 0.8 g/kW-hr $HC+NO_X$ and 4.4 g/kW-hr CO using steady-state and transient test procedures, as described in subpart F of this part.

(2) 1.1 g/kW-hr $HC+NO_X$ and 6.6 g/kW-hr CO using field-testing procedures, as described in subpart F of this part.

(d) If you certify an engine family under this section, it is subject to all the requirements of this part as if these voluntary standards were mandatory.

§ 1048.145 What provisions apply only for a limited time?

The provisions in this section apply instead of other provisions in this part. This section describes when these interim provisions expire.

(a) *Family banking.* You may certify an engine family to comply with Tier 1 or Tier 2 standards earlier than necessary. For each model year of early compliance for an engine family, you may delay compliance with the same standards for an equal number of engines from another engine family (or families) for one model year. If you certify engines under the voluntary standards of § 1048.140, you may not use them in your calculation under this paragraph (a). Base your calculation on actual power-weighted nationwide sales for each family. You may delay compliance for up to three model years. For example, if you sell 1,000 engines with an average power rating of 60 kW certified a year early, you may delay certification to that tier of standards for up to 60,000 kW-engine-years in any of the following ways:

(1) Delay certification of another engine family with an average power rating of 100 kW of up to 600 engines for one model year.

(2) Delay certification of another engine family with an average power rating of 100 kW of up to 200 engines for three model years.

(3) Delay certification of one engine family with an average power rating of 100 kW of up to 400 engines for one model year and a second engine family with an average power rating of 200 kW of up to 50 engines for two model years.

(b) *Hydrocarbon standards.* For 2004 through 2006 model years, engine manufacturers may use nonmethane

hydrocarbon measurements to demonstrate compliance with applicable emission standards.

(c) *Transient emission testing.* Engines rated over 560 kW are exempt from the transient emission standards in § 1048.101(a).

(d) *Tier 1 deterioration factors.* For Tier 1 engines, base the deterioration factor from § 1048.240 on 3500 hours of operation. We may assign a deterioration factor for a Tier 1 engine family, but this would not affect your need to meet all emission standards that apply.

(e) [Reserved]

(f) *Optional early field testing.* You may optionally use the field-testing procedures in subpart F of this part for any in-use testing required under subpart E of this part to show that you meet Tier 1 standards. In this case, the same Tier 1 in-use emission standards apply to both steady-state testing in the laboratory and field testing.

(g) *Small-volume provisions.* If you qualify for the hardship provisions in § 1068.250 of this chapter, we may approve extensions of up to four years total.

(h) *2004 certification.* For the 2004 model year, you may choose to have the emission standards and other requirements that apply to these engines in California serve as the emission standards and other requirements applicable under this part, instead of those in subpart A of this part. To ask for a certificate under this paragraph (h), send us the application for certification that you prepare for the California Air Resources Board instead of the information we otherwise require in § 1048.205.

(i) *Recreational vehicles.* Engines or vehicles identified in the scope of 40 CFR part 1051 that are not yet regulated under that part are excluded from the requirements of this part. For example, snowmobiles produced in 2004 are not subject to the emission standards in this part. Once emission standards apply to these engines and vehicles, they are excluded from the requirements of this part under § 1048.5(a)(1).

Subpart C—Certifying Engine Families

§ 1048.201 What are the general requirements for submitting a certification application?

(a) Send us an application for a certificate of conformity for each engine family. Each application is valid for only one model year.

(b) The application must not include false or incomplete statements or information (see § 1048.255).

(c) We may choose to ask you to send us less information than we specify in this subpart, but this would not change your recordkeeping requirements.

(d) Use good engineering judgment for all decisions related to your application (see 40 CFR 1068.5).

(e) An authorized representative of your company must approve and sign the application.

§ 1048.205 What must I include in my application?

In your application, do all the following things unless we ask you to send us less information:

(a) Describe the engine family's specifications and other basic parameters of the engine's design. List the types of fuel you intend to use to certify the engine family (for example, gasoline, liquefied petroleum gas, methanol, or natural gas).

(b) Explain how the emission-control systems operate.

(1) Describe in detail all the system components for controlling exhaust emissions, including auxiliary emission-control devices and all fuel-system components you will install on any production or test engine. Explain why any auxiliary emission-control devices are not defeat devices (see § 1048.115(g)). Do not include detailed calibrations for components unless we ask for them.

(2) Describe the evaporative emission controls.

(c) Explain how the engine diagnostic system works, describing especially the engine conditions (with the corresponding diagnostic trouble codes) that cause the malfunction-indicator light to go on. Propose what you consider to be extreme conditions under which the diagnostic system should disregard trouble codes, as described in § 1048.110.

(d) Describe the engines you selected for testing and the reasons for selecting them.

(e) Describe any special or alternate test procedures you used (see § 1048.501).

(f) Describe how you operated the engine or vehicle prior to testing, including the duty cycle and the number of engine operating hours used to stabilize emission levels. Describe any scheduled maintenance you did.

(g) List the specifications of the test fuel to show that it falls within the required ranges we specify in 40 CFR part 1065, subpart C.

(h) Identify the engine family's useful life.

(i) Propose maintenance and use instructions for the ultimate buyer of each new nonroad engine (see § 1048.125).

(j) Propose emission-related installation instructions if you sell engines for someone else to install in a piece of nonroad equipment (see § 1048.130).

(k) Identify each high-cost warranted part and show us how you calculated its replacement cost, including the estimated retail cost of the part, labor rates, and labor hours to diagnose and replace defective parts.

(l) Propose an emission control information label.

(m) Present emission data to show that you meet emission standards.

(1) Present exhaust emission data for HC, NO_X, and CO on a test engine to show your engines meet the duty-cycle emission standards we specify in § 1048.101(a) and (b). Show these figures before and after applying deterioration factors for each engine. Starting in the 2007 model year, identify the duty-cycle emission standards to which you are certifying engines in the engine family. Include test data for each type of fuel from 40 CFR part 1065, subpart C, on which you intend for engines in the engine family to operate (for example, gasoline, liquefied petroleum gas, methanol, or natural gas). If we specify more than one grade of any fuel type (for example, a summer grade and winter grade of gasoline), you only need to submit test data for one grade, unless the regulations of this part specify otherwise for your engine. Note that § 1048.235 allows you to submit an application in certain cases without new emission data.

(2) If your engine family includes a volatile liquid fuel (and you do not use design-based certification under § 1048.245) present evaporative test data to show your vehicles meet the evaporative emission standards we specify in subpart B of this part. Show these figures before and after applying deterioration factors, where applicable.

(n) Report all test results, including those from invalid tests or from any nonstandard tests (such as measurements based on exhaust concentrations in parts per million).

(o) Identify the engine family's deterioration factors and describe how you developed them. Present any emission test data you used for this.

(p) Describe all adjustable operating parameters (see § 1048.115(e)), including the following:

(1) The nominal or recommended setting.

(2) The intended physically adjustable range, including production tolerances if they affect the range.

(3) The limits or stops used to establish adjustable ranges.

(q) Describe everything we need to read and interpret all the information broadcast by an engine's onboard

computers and electronic control modules and state that you will give us any hardware or tools we would need to do this. You may reference any appropriate publicly released standards that define conventions for these messages and parameters. Format your information consistent with publicly released standards.

(r) State whether your engine will operate in variable-speed applications, constant-speed applications, or both. If your certification covers only constant-speed or only variable-speed applications, describe how you will prevent use of these engines in the applications for which they are not certified.

(s) Starting in the 2007 model year, state that all the engines in the engine family comply with the field-testing emission standards we specify in § 1048.101(c) for all normal operation and use (see § 1048.515). Describe in detail any testing, engineering analysis, or other information on which you base this statement.

(t) State that you operated your test engines according to the specified procedures and test parameters using the fuels described in the application to show you meet the requirements of this part.

(u) State unconditionally that all the engines in the engine family comply with the requirements of this part, other referenced parts, and the Clean Air Act.

(v) Include estimates of U.S.-directed production volumes.

(w) Show us how to modify your production engines to measure emissions in the field (see § 1048.115(d)).

(x) Add other information to help us evaluate your application if we ask for it.

§ 1048.210 May I get preliminary approval before I complete my application?

If you send us information before you finish the application, we will review it and make any appropriate determinations listed in § 1048.215(b)(1) through (7). Decisions made under this section are considered to be preliminary approval. We will generally not disapprove applications under § 1048.215(b)(1) through (5) where we have given you preliminary approval, unless we find new and substantial information supporting a different decision.

(a) If you request preliminary approval related to the upcoming model year or the model year after that, we will make a ''best-efforts'' attempt to make the appropriate determinations as soon as possible. We will generally not provide preliminary approval related to a future model year more than two years ahead of time.

(b) You may consider full compliance with published guidance to be preliminary approval only if the guidance includes a statement that we intend you to consider it as such.

§ 1048.215 What happens after I complete my application?

(a) If any of the information in your application changes after you submit it, amend it as described in § 1048.225.

(b) We may deny your application (that is, determine that we cannot approve it without revision) if the engine family does not meet the requirements of this part or the Act. For example:

(1) If you inappropriately use the provisions of § 1048.230(c) or (d) to define a broader or narrower engine family, we will require you to redefine your engine family.

(2) If we determine you did not appropriately select the useful life under § 1048.101(g), we will require you to lengthen it.

(3) If we determine you did not appropriately select deterioration factors under § 1048.240(c), we will require you to revise them.

(4) If your diagnostic system is inadequate for detecting significant malfunctions in emission-control systems, as described in § 1048.110(b), we will require you to make the system more effective.

(5) If your diagnostic system inappropriately disregards trouble codes under certain conditions, as described in § 1048.110(f), we will require you to change the system to operate under broader conditions.

(6) If your proposed emission control information label is inconsistent with § 1048.135, we will require you to change it (and tell you how, if possible).

(7) If you require or recommend maintenance and use instructions inconsistent with § 1048.125, we will require you to change them.

(8) If we find any other problem with your application, we will tell you what the problem is and what needs to be corrected.

(c) If we determine your application is complete and shows that the engine family meets all the requirements of this part and the Act, we will issue a certificate of conformity for your engine family for that model year. If we deny the application, we will explain why in writing. You may then ask us to hold a hearing to reconsider our decision (see § 1048.820).

§ 1048.220 How do I amend the maintenance instructions in my application?

Send the Designated Officer a request to amend your application for certification for an engine family if you want to change the emission-related maintenance instructions in a way that could affect emissions. In your request, describe the proposed changes to the maintenance instructions.

(a) If you are decreasing the specified level of maintenance, you may distribute the new maintenance instructions to your customers 30 days after we receive your request, unless we disapprove your request. We may approve a shorter time or waive this requirement.

(b) If your requested change would not decrease the specified level of maintenance, you may distribute the new maintenance instructions anytime after you send your request.

(c) If you are correcting or clarifying your maintenance instructions or if you are changing instructions for maintenance unrelated to emission controls, the requirements of this section do not apply.

§ 1048.225 How do I amend my application to include new or modified engines?

(a) You must amend your application for certification before you take either of the following actions:

(1) Add an engine to a certificate of conformity (this includes any changes you make in selecting emission standards under § 1048.205(m)(1)).

(2) Make a design change for a certified engine family that may affect emissions or an emission-related part over the engine's lifetime.

(b) Send the Designated Officer a request to amend the application for certification for an engine family. In your request, do all of the following:

(1) Describe the engine model or configuration you are adding or changing.

(2) Include engineering evaluations or reasons why the original test engine is or is not still appropriate.

(3) If the original test engine for the engine family is not appropriate to show compliance for the new or modified nonroad engine, include new test data showing that the new or modified nonroad engine meets the requirements of this part.

(c) You may start producing the new or modified nonroad engine anytime after you send us your request. If we determine that the affected engines do not meet applicable requirements, we will require you to cease production of the engines and to recall and correct the engines at no expense to the owner. If

you choose to produce engines under this paragraph (c), we will consider that to be consent to recall all engines that we determine do not meet applicable standards or other requirements and to remedy the nonconformity at no expense to the owner.

(d) You must give us test data within 30 days if we ask for more testing, or stop producing the engine if you cannot do this. You may give us an engineering evaluation instead of test data if we agree that you can address our questions without test data.

(e) If we determine that the certificate of conformity would not cover your new or modified nonroad engine, we will send you a written explanation of our decision. In this case, you may no longer produce these engines, though you may ask for a hearing for us to reconsider our decision (see § 1048.820).

§ 1048.230 How do I select engine families?

(a) Divide your product line into families of engines that you expect to have similar emission characteristics. Your engine family is limited to a single model year.

(b) Group engines in the same engine family if they are the same in all of the following aspects:

(1) The combustion cycle.

(2) The cooling system (water-cooled vs. air-cooled).

(3) Configuration of the fuel system (for example, fuel injection vs. carburetion).

(4) Method of air aspiration.

(5) The number, location, volume, and composition of catalytic converters.

(6) The number, arrangement, and approximate bore diameter of cylinders.

(7) Evaporative emission controls.

(c) In some cases you may subdivide a group of engines that is identical under paragraph (b) of this section into different engine families. To do so, you must show you expect emission characteristics to be different during the useful life or that any of the following engine characteristics are different:

(1) Method of actuating intake and exhaust timing (poppet valve, reed valve, rotary valve, etc.).

(2) Location or size of intake and exhaust valves or ports.

(3) Configuration of the combustion chamber.

(4) Cylinder stroke.

(5) Exhaust system.

(6) Type of fuel.

(d) If your engines are not identical with respect to the things listed in paragraph (b) of this section, but you show that their emission characteristics during the useful life will be similar, we may approve grouping them in the same engine family.

(e) If you cannot appropriately define engine families by the method in this section, we will define them based on features related to emission characteristics.

(f) You may ask us to create separate families for exhaust emissions and evaporative emissions. If we do this, list both families on the emission control information label.

(g) Where necessary, you may divide an engine family into sub-families to meet different emission standards, as specified in § 1048.101(a)(2). For issues related to compliance and prohibited actions, we will generally apply decisions to the whole engine family. For engine labels and other administrative provisions, we may approve your request for separate treatment of sub-families.

§ 1048.235 What emission testing must I perform for my application for a certificate of conformity?

This section describes the emission testing you must perform to show compliance with the emission standards in §§ 1048.101(a) and (b) and 1048.105 during certification. See § 1048.205(s) regarding emission testing related to the field-testing emission standards.

(a) Test your emission-data engines using the procedures and equipment specified in subpart F of this part. For any testing related to evaporative emissions, use good engineering judgment to include a complete fuel system with the engine.

(b) Select engine families according to the following criteria:

(1) For exhaust testing, select from each engine family a test engine for each fuel type with a configuration that is most likely to exceed the exhaust emission standards, using good engineering judgment. Consider the emission levels of all exhaust constituents over the full useful life of the engine when operated in a piece of equipment.

(2) For evaporative testing, select from each engine family a test fuel system for each fuel type with a configuration that is most likely to exceed the evaporative emission standards, using good engineering judgment.

(c) You may use previously generated emission data in either of the following cases:

(1) You may submit emission data for equivalent engine families from previous years instead of doing new tests, but only if the data show that the test engine would meet all the requirements for the latest engine models. We may require you to do new emission testing if we believe the latest engine models could be substantially different from the previously tested engine.

(2) You may submit emission data for equivalent engine families performed to show compliance with other standards (such as California standards) instead of doing new tests, but only if the data show that the test engine would meet all of this part's requirements.

(d) We may choose to measure emissions from any of your test engines (or other engines from the engine family).

(1) If we do this, you must provide the test engine at the location we select. We may decide to do the testing at your plant or any other facility. If we choose to do the testing at your plant, you must schedule it as soon as possible and make available the instruments and equipment we need.

(2) If we measure emissions on one of your test engines, the results of that testing become the official data for the engine. Unless we later invalidate this data, we may decide not to consider your data in determining if your engine family meets the emission standards.

(3) Before we test one of your engines, we may set its adjustable parameters to any point within the physically adjustable ranges (see § 1048.115(e)).

(4) Calibrate the test engine within normal production tolerances for anything we do not consider an adjustable parameter (see § 1048.205(p)).

§ 1048.240 How do I demonstrate that my engine family complies with exhaust emission standards?

(a) For certification, your engine family is considered in compliance with the numerical emission standards in § 1048.101 (a) and (b), if all emission-data engines representing that family have test results showing emission levels at or below these standards.

(b) Your engine family does not comply if any emission-data engine representing that family has test results showing emission levels above the standards from § 1048.101 (a) and (b) for any pollutant.

(c) To compare emission levels from the test engine with the emission standards, apply deterioration factors to the measured emission levels. The deterioration factor is a number that shows the relationship between exhaust emissions at the end of useful life and at the low-hour test point. Specify the deterioration factors based on emission measurements using four significant figures, consistent with good engineering judgment. For example, deterioration factors must be consistent with emission increases observed from in-use testing with similar engines (*see* subpart E of this part). Small-volume

engine manufacturers may use assigned deterioration factors that we establish. Apply the deterioration factors as follows:

(1) For engines that use aftertreatment technology, such as catalytic converters, the deterioration factor is the ratio of exhaust emissions at the end of useful life to exhaust emissions at the low-hour test point. Adjust the official emission results for each tested engine at the selected test point by multiplying the measured emissions by the deterioration factor. If the factor is less than one, use one.

(2) For engines that do not use aftertreatment technology, the deterioration factor is the difference between exhaust emissions at the end of useful life and exhaust emissions at the low-hour test point. Adjust the official emission results for each tested engine at the selected test point by adding the factor to the measured emissions. If the factor is less than zero, use zero.

(d) After adjusting the emission levels for deterioration, round them to the same number of decimal places as the emission standard. Compare the rounded emission levels to the emission standard for each test engine.

§ 1048.245 How do I demonstrate that my engine family complies with evaporative emission standards?

(a) For certification, your engine family is considered in compliance with the evaporative emission standards in subpart B of this part if you do either of the following:

(1) You have test results showing that evaporative emissions in the family are at or below the standards throughout the useful life.

(2) Where applicable, you comply with the design specifications in paragraph (e) of this section.

(b) Your engine family does not comply if any fuel system representing that family has test results showing emission levels above the standards.

(c) Use good engineering judgment to develop a test plan to establish deterioration factors to show how much emissions increase at the end of useful life.

(d) If you adjust the emission levels for deterioration, round them to the same number of decimal places as the emission standard. Compare the rounded emission levels to the emission standard for each test fuel system.

(e) You may demonstrate that your engine family complies with the evaporative emission standards by demonstrating that you use the following control technologies:

(1) For certification to the standards specified in § 1048.105(a)(1), with the following technologies:

(i) Use a tethered or self-closing gas cap on a fuel tank that stays sealed up to a positive pressure of 24.5 kPa (3.5 psig) or a vacuum pressure of 10.5 kPa (1.5 psig).

(ii) [Reserved]

(2) For certification to the standards specified in § 1048.105(a)(3), demonstrating that you use design features to prevent fuel boiling under all normal operation. You may do this using fuel temperature data measured during normal operation.

(3) We may establish additional options for design-based certification where we find that new test data demonstrate that a technology will ensure compliance with the emission standards in this section.

§ 1048.250 What records must I keep and make available to EPA?

(a) Organize and maintain the following records to keep them readily available; we may review these records at any time:

(1) A copy of all applications and any summary information you sent us.

(2) Any of the information we specify in § 1048.205 that you did not include in your application.

(3) A detailed history of each emission-data engine. In each history, describe all of the following:

(i) The test engine's construction, including its origin and buildup, steps you took to ensure that it represents production engines, any components you built specially for it, and all emission-related components.

(ii) How you accumulated engine operating hours, including the dates and the number of hours accumulated.

(iii) All maintenance (including modifications, parts changes, and other service) and the dates and reasons for the maintenance.

(iv) All your emission tests, including documentation on routine and standard tests, as specified in part 40 CFR part 1065, and the date and purpose of each test.

(v) All tests to diagnose engine or emission-control performance, giving the date and time of each and the reasons for the test.

(vi) Any other significant events.

(b) Keep data from routine emission tests (such as test cell temperatures and relative humidity readings) for one year after we issue the associated certificate of conformity. Keep all other information specified in paragraph (a) of this section for eight years after we issue your certificate.

(c) Store these records in any format and on any media, as long as you can promptly send us organized, written records in English if we ask for them.

(d) Send us copies of any engine maintenance instructions or explanations if we ask for them.

§ 1048.255 When may EPA deny, revoke, or void my certificate of conformity?

(a) We may deny your application for certification if your engine family fails to comply with emission standards or other requirements of this part or the Act. Our decision may be based on any information available to us showing you do not meet emission standards or other requirements, including any testing that we conduct under paragraph (f) of this section. If we deny your application, we will explain why in writing.

(b) In addition, we may deny your application or revoke your certificate if you do any of the following:

(1) Refuse to comply with any testing or reporting requirements.

(2) Submit false or incomplete information (paragraph (d) of this section applies if this is fraudulent).

(3) Render inaccurate any test data.

(4) Deny us from completing authorized activities despite our presenting a warrant or court order (see 40 CFR 1068.20).

(5) Produce engines for importation into the United States at a location where local law prohibits us from carrying out authorized activities.

(c) We may void your certificate if you do not keep the records we require or do not give us information when we ask for it.

(d) We may void your certificate if we find that you intentionally submitted false or incomplete information.

(e) If we deny your application or revoke or void your certificate, you may ask for a hearing (see § 1048.820). Any such hearing will be limited to substantial and factual issues.

(f) We may conduct confirmatory testing of your engines as part of certification. We may deny your application for certification or revoke your certificate if your engines fail to comply with emission standards or other requirements during confirmatory testing.

Subpart D—Testing Production-line Engines

§ 1048.301 When must I test my production-line engines?

(a) If you produce engines that are subject the requirements of this part, you must test them as described in this subpart.

(b) We may suspend or revoke your certificate of conformity for certain engine families if your production-line engines do not meet the requirements of this part or you do not fulfill your

obligations under this subpart (see §§ 1048.325 and 1048.340).

(c) Other requirements apply to engines that you produce. Other regulatory provisions authorize us to suspend, revoke, or void your certificate of conformity, or order recalls for engines families without regard to whether they have passed these production-line testing requirements. The requirements of this part do not affect our ability to do selective enforcement audits, as described in part 1068 of this chapter. Individual engines in families that pass these production-line testing requirements must also conform to all applicable regulations of this part and part 1068 of this chapter.

(d) You may ask to use an alternate program for testing production-line engines. In your request, you must show us that the alternate program gives equal assurance that your production-line engines meet the requirements of this part. If we approve your alternate program, we may waive some or all of this subpart's requirements.

(e) If you certify an engine family with carryover emission data, as described in § 1048.235(c), and these equivalent engine families consistently pass the production-line testing requirements over the preceding two-year period, you may ask for a reduced testing rate for further production-line testing for that family. The minimum testing rate is one engine per engine family. If we reduce your testing rate, we may limit our approval to any number of model years. In determining whether to approve your request, we may consider the number of engines that have failed the emission tests.

(f) We may ask you to make a reasonable number of production-line engines available for a reasonable time so we can test or inspect them for compliance with the requirements of this part.

§ 1048.305 How must I prepare and test my production-line engines?

(a) *Test procedures.* Test your production-line engines using either the steady-state or transient testing procedures in subpart F of this part to show you meet the emission standards in § 1048.101(a) or (b), respectively. We may require you to test engines using the transient testing procedures to show you meet the emission standards in § 1048.101(a).

(b) *Modifying a test engine.* Once an engine is selected for testing (see § 1048.310), you may adjust, repair, prepare, or modify it or check its emissions only if one of the following is true:

(1) You document the need for doing so in your procedures for assembling and inspecting all your production engines and make the action routine for all the engines in the engine family.

(2) This subpart otherwise specifically allows your action.

(3) We approve your action in advance.

(c) *Engine malfunction.* If an engine malfunction prevents further emission testing, ask us to approve your decision to either repair the engine or delete it from the test sequence.

(d) *Setting adjustable parameters.* Before any test, we may adjust or require you to adjust any adjustable parameter to any setting within its physically adjustable range.

(1) We may adjust idle speed outside the physically adjustable range as needed only until the engine has stabilized emission levels (see paragraph (e) of this section). We may ask you for information needed to establish an alternate minimum idle speed.

(2) We may make or specify adjustments within the physically adjustable range by considering their effect on emission levels, as well as how likely it is someone will make such an adjustment with in-use engines.

(e) *Stabilizing emission levels.* Before you test production-line engines, you may operate the engine to stabilize the emission levels. Using good engineering judgment, operate your engines in a way that represents the way production engines will be used. You may operate each engine for no more than the greater of two periods:

(1) 50 hours.

(2) The number of hours you operated your emission-data engine for certifying the engine family (see 40 CFR part 1065, subpart E).

(f) *Damage during shipment.* If shipping an engine to a remote facility for production-line testing makes necessary an adjustment or repair, you must wait until after the after the initial emission test to do this work. We may waive this requirement if the test would be impossible or unsafe, or if it would permanently damage the engine. Report to us, in your written report under § 1048.345, all adjustments or repairs you make on test engines before each test.

(g) *Retesting after invalid tests.* You may retest an engine if you determine an emission test is invalid. Explain in your written report reasons for invalidating any test and the emission results from all tests. If you retest an engine and, within ten days after testing, ask to substitute results of the new tests for the original ones, we will answer within ten days after we receive your information.

§ 1048.310 How must I select engines for production-line testing?

(a) Use test results from two engines for each engine family to calculate the required sample size for the model year. Update this calculation with each test.

(b) Early in each calendar quarter, randomly select and test two engines from the end of the assembly line for each engine family.

(c) Calculate the required sample size for each engine family. Separately calculate this figure for $HC+NO_X$ and for CO. The required sample size is the greater of these two calculated values. Use the following equation:

$$N = \left[\frac{(t_{95} \times \sigma)}{(x - STD)}\right]^2 + 1$$

Where:

N = Required sample size for the model year.

t_{95} = 95% confidence coefficient, which depends on the number of tests completed, n, as specified in the table in paragraph (c)(1) of this section. It defines 95% confidence intervals for a one-tail distribution.

x = Mean of emission test results of the sample.

STD = Emission standard.

σ = Test sample standard deviation (see paragraph (c)(2) of this section).

(1) Determine the 95% confidence coefficient, t_{95}, from the following table:

n	t_{95}	n	t_{95}	n	t_{95}
2	6.31	12	1.80	22	1.72
3	2.92	13	1.78	23	1.72
4	2.35	14	1.77	24	1.71
5	2.13	15	1.76	25	1.71
6	2.02	16	1.75	26	1.71
7	1.94	17	1.75	27	1.71
8	1.90	18	1.74	28	1.70
9	1.86	19	1.73	29	1.70

n	t_{95}	n	t_{95}	n	t_{95}
10	1.83	20	1.73	30+	1.70
11	1.81	21	1.72		

(2) Calculate the standard deviation, σ, for the test sample using the following formula:

$$\sigma = \sqrt{\frac{\sum (X_i - x)^2}{n-1}}$$

Where:

X_i = Emission test result for an individual engine.

n = The number of tests completed in an engine family.

(d) Use final deteriorated test results to calculate the variables in the equations in paragraph (c) of this section (see § 1048.315(a)).

(e) After each new test, recalculate the required sample size using the updated mean values, standard deviations, and the appropriate 95-percent confidence coefficient.

(f) Distribute the remaining engine tests evenly throughout the rest of the year. You may need to adjust your schedule for selecting engines if the required sample size changes. Continue to randomly select engines from each engine family; this may involve testing engines that operate on different fuels.

(g) Continue testing any engine family for which the sample mean, x, is greater than the emission standard. This applies if the sample mean for either $HC+NO_X$ or for CO is greater than the emission standard. Continue testing until one of the following things happens:

(1) The sample size, n, for an engine family is greater than the required sample size, N, and the sample mean, x, is less than or equal to the emission standard. For example, if N = 3.1 after the third test, the sample-size calculation does not allow you to stop testing.

(2) The engine family does not comply according to § 1048.325.

(3) You test 30 engines from the engine family.

(4) You test one percent of your projected annual U.S.-directed production volume for the engine family.

(5) You choose to declare that the engine family does not comply with the requirements of this subpart.

(h) If the sample-size calculation allows you to stop testing for a pollutant, you must continue measuring emission levels of that pollutant for any additional tests required under this section. However, you need not continue making the calculations specified in this section for that pollutant. This paragraph (h) does not affect the requirements in section § 1048.320.

(i) You may elect to test more randomly chosen engines than we require. Include these engines in the sample-size calculations.

§ 1048.315 How do I know when my engine family fails the production-line testing requirements?

This section describes the pass/fail criteria for the production-line testing requirements. We apply this criteria on an engine-family basis. See § 1048.320 for the requirements that apply to individual engines that fail a production-line test.

(a) Calculate your test results. Round them to the number of decimal places in the emission standard expressed to one more decimal place.

(1) *Initial and final test results.* Calculate and round the test results for each engine. If you do several tests on an engine, calculate the initial test results, then add them together and divide by the number of tests and round for the final test results on that engine.

(2) *Final deteriorated test results.* Apply the deterioration factor for the engine family to the final test results (see § 1048.240(c)).

(b) Construct the following CumSum Equation for each engine family (for $HC+NO_X$ and for CO emissions):

$$C_i = C_{i-1} + X_i - (STD + 0.25 \times \sigma)$$

Where:

C_i = The current CumSum statistic.

C_{i-1} = The previous CumSum statistic. For the first test, CumSum statistic is 0 (*i.e.* $C_1 = 0$).

X_i = The current emission test result for an individual engine.

STD = Emission standard.

(c) Use final deteriorated test results to calculate the variables in the equation in paragraph (b) of this section (see § 1048.315(a)).

(d) After each new test, recalculate the CumSum statistic.

(e) If you test more than the required number of engines, include the results from these additional tests in the CumSum Equation.

(f) After each test, compare the current CumSum statistic, C_i, to the recalculated Action Limit, H, defined as $H = 5.0 \times \sigma$.

(g) If the CumSum statistic exceeds the Action Limit in two consecutive tests, the engine family fails the production-line testing requirements of this subpart. Tell us within ten working days if this happens.

(h) If you amend the application for certification for an engine family (see § 1048.225), do not change any previous calculations of sample size or CumSum statistics for the model year.

§ 1048.320 What happens if one of my production-line engines fails to meet emission standards?

If you have a production-line engine with final deteriorated test results exceeding one or more emission standards (see § 1048.315(a)), the certificate of conformity is automatically suspended for that failing engine. You must take the following actions before your certificate of conformity can cover that engine:

(a) Correct the problem and retest the engine to show it complies with all emission standards.

(b) Include in your written report a description of the test results and the remedy for each engine (see § 1048.345).

§ 1048.325 What happens if an engine family fails the production-line requirements?

(a) We may suspend your certificate of conformity for an engine family if it fails under § 1048.315. The suspension may apply to all facilities producing engines from an engine family, even if you find noncompliant engines only at one facility.

(b) We will tell you in writing if we suspend your certificate in whole or in part. We will not suspend a certificate until at least 15 days after the engine family fails. The suspension is effective when you receive our notice.

(c) Up to 15 days after we suspend the certificate for an engine family, you may ask for a hearing (see § 1048.820). If we agree before a hearing that we used erroneous information in deciding to suspend the certificate, we will reinstate the certificate.

(d) Section § 1048.335 specifies steps you must take to remedy the cause of the production-line failure. All the engines you have produced since the end of the last test period are presumed noncompliant and should be addressed in your proposed remedy. We may require you to apply the remedy to engines produced earlier if we determine that the cause of the failure is likely to have affected the earlier engines.

§ 1048.330 May I sell engines from an engine family with a suspended certificate of conformity?

You may sell engines that you produce after we suspend the engine family's certificate of conformity under § 1048.315 only if one of the following occurs:

(a) You test each engine you produce and show it complies with emission standards that apply.

(b) We conditionally reinstate the certificate for the engine family. We may do so if you agree to recall all the affected engines and remedy any noncompliance at no expense to the owner if later testing shows that the engine family still does not comply.

§ 1048.335 How do I ask EPA to reinstate my suspended certificate?

(a) Send us a written report asking us to reinstate your suspended certificate. In your report, identify the reason for noncompliance, propose a remedy for the engine family, and commit to a date for carrying it out. In your proposed remedy include any quality control measures you propose to keep the problem from happening again.

(b) Give us data from production-line testing that shows the remedied engine family complies with all the emission standards that apply.

§ 1048.340 When may EPA revoke my certificate under this subpart and how may I sell these engines again?

(a) We may revoke your certificate for an engine family in the following cases:

(1) You do not meet the reporting requirements.

(2) Your engine family fails to comply with the requirements of this subpart and your proposed remedy to address a suspended certificate under § 1048.325 is inadequate to solve the problem or requires you to change the engine's design or emission-control system.

(b) To sell engines from an engine family with a revoked certificate of conformity, you must modify the engine family and then show it complies with the requirements of this part.

(1) If we determine your proposed design change may not control emissions for the engine's full useful life, we will tell you within five working days after receiving your report. In this case we will decide whether production-line testing will be enough for us to evaluate the change or whether you need to do more testing.

(2) Unless we require more testing, you may show compliance by testing production-line engines as described in this subpart.

(3) We will issue a new or updated certificate of conformity when you have met these requirements.

§ 1048.345 What production-line testing records must I send to EPA?

Do all the following things unless we ask you to send us less information:

(a) Within 30 calendar days of the end of each calendar quarter, send us a report with the following information:

(1) Describe any facility used to test production-line engines and state its location.

(2) State the total U.S.-directed production volume and number of tests for each engine family.

(3) Describe how you randomly selected engines.

(4) Describe your test engines, including the engine family's identification and the engine's model year, build date, model number, identification number, and number of hours of operation before testing for each test engine.

(5) Identify where you accumulated hours of operation on the engines and describe the procedure and schedule you used.

(6) Provide the test number; the date, time and duration of testing; test procedure; initial test results before and after rounding; final test results; and final deteriorated test results for all tests. Provide the emission results for all measured pollutants. Include information for both valid and invalid tests and the reason for any invalidation.

(7) Describe completely and justify any nonroutine adjustment, modification, repair, preparation, maintenance, or test for the test engine if you did not report it separately under this subpart. Include the results of any emission measurements, regardless of the procedure or type of equipment.

(8) Provide the CumSum analysis required in § 1048.315 for each engine family.

(9) Report on each failed engine as described in § 1048.320.

(10) State the date the calendar quarter ended for each engine family.

(b) We may ask you to add information to your written report, so we can determine whether your new nonroad engines conform with the requirements of this subpart.

(c) An authorized representative of your company must sign the following statement:

> We submit this report under Sections 208 and 213 of the Clean Air Act. Our production-line testing conformed completely with the requirements of 40 CFR part 1048. We have not changed production processes or quality-control procedures for the engine family in a way that might affect the emission control from production engines. All the information in this report is true and accurate, to the best of my knowledge. I know of the penalties for violating the Clean Air Act and the regulations. (Authorized Company Representative)

(d) Send electronic reports of production-line testing to the Designated Officer using an approved information format. If you want to use a different format, send us a written request with justification for a waiver.

(e) We will send copies of your reports to anyone from the public who asks for them. See § 1048.815 for information on how we treat information you consider confidential.

§ 1048.350 What records must I keep?

(a) Organize and maintain your records as described in this section. We may review your records at any time, so it is important to keep required information readily available.

(b) Keep paper records of your production-line testing for one full year after you complete all the testing required for an engine family in a model year. You may use any additional storage formats or media if you like.

(c) Keep a copy of the written reports described in § 1048.345.

(d) Keep the following additional records:

(1) A description of all test equipment for each test cell that you can use to test production-line engines.

(2) The names of supervisors involved in each test.

(3) The name of anyone who authorizes adjusting, repairing, preparing, or modifying a test engine and the names of all supervisors who oversee this work.

(4) If you shipped the engine for testing, the date you shipped it, the associated storage or port facility, and the date the engine arrived at the testing facility.

(5) Any records related to your production-line tests that are not in the written report.

(6) A brief description of any significant events during testing not otherwise described in the written report or in this section.

(7) Any information specified in § 1048.345 that you do not include in your written reports.

(e) If we ask, you must give us projected or actual production figures for an engine family. We may ask you to divide your production figures by maximum brake power, displacement, fuel type, or assembly plant (if you produce engines at more than one plant).

(f) Keep a list of engine identification numbers for all the engines you produce under each certificate of conformity. Give us this list within 30 days if we ask for it.

(g) We may ask you to keep or send other information necessary to implement this subpart.

Subpart E—Testing In-use Engines

§ 1048.401 What testing requirements apply to my engines that have gone into service?

(a) If you produce engines that are subject to the requirements of this part, you must test them as described in this subpart. This generally involves testing engines in the field or removing them for measurement in a laboratory.

(b) We may approve an alternate plan for showing that in-use engines comply with the requirements of this part if one of the following is true:

(1) You produce 200 or fewer engines per year in the selected engine family.

(2) Removing the engine from most of the applications for that engine family causes significant, irreparable damage to the equipment.

(3) You identify a unique aspect of your engine applications that keeps you from doing the required in-use testing.

(c) We may void your certificate of conformity for an engine family if you do not meet your obligations under this part.

(d) Independent of your responsibility to test in-use engines, we may choose at any time to do our own testing of your in-use engines.

(e) If in-use testing shows that engines fail to meet emission standards or other requirements of this part, we may pursue a recall or other remedy as allowed by the Act (see § 1048.415).

§ 1048.405 How does this program work?

(a) You must test in-use engines, for exhaust emissions, from the families we select. We may select up to 25 percent of your engine families in any model year—or one engine family if you have three or fewer families. We will select engine families for testing before the end of the model year. When we select an engine family for testing, we may specify that you preferentially test engines based on fuel type or equipment type. In addition, we may identify specific modes of operation or sampling times. You may choose to test additional engine families that we do not select.

(b) Send us an in-use testing plan within 12 calendar months after we direct you to test a particular engine family. Complete the testing within 24 calendar months after we approve your plan.

(c) You may need to test engines from more than one model year at a given time.

§ 1048.410 How must I select, prepare, and test my in-use engines?

(a) You may make arrangements to select representative test engines from your own fleet or from other independent sources.

(b) For the selected engine families, select engines that you or your customers have—

(1) Operated for at least 50 percent of the engine family's useful life (see § 1048.101(d));

(2) Not maintained or used in an abnormal way; and

(3) Documented in terms of total hours of operation, maintenance, operating conditions, and storage.

(c) Use the following methods to determine the number of engines you must test in each engine family:

(1) Test at least two engines if you produce 2,000 or fewer engines in the model year from all engine families, or if you produce 500 or fewer engines from the selected engine family. Otherwise, test at least four engines.

(2) If you successfully complete an in-use test program on an engine family and later certify an equivalent engine family with carryover emission data, as described in § 1048.235(c), then test at least one engine instead of the testing rates in paragraph (c)(1) of this section.

(3) If you test the minimum required number of engines and all comply fully with emission standards, you may stop testing.

(4) For each engine that fails any applicable standard, test two more. Regardless of measured emission levels, you do not have to test more than ten engines in an engine family. You may do more tests than we require.

(5) You may concede that the engine family does not comply before testing a total of ten engines.

(d) You may do minimal maintenance to set components of a test engine to specifications for anything we do not consider an adjustable parameter (see § 1048.205(p)). Limit maintenance to what is in the owner's instructions for engines with that amount of service and age. Document all maintenance and adjustments.

(e) Do at least one valid exhaust emission test for each test engine.

(f) For a test program on an engine family, choose one of the following methods to test your engines:

(1) Remove the selected engines for testing in a laboratory. Use the applicable steady-state and transient procedures in subpart F of this part to show compliance with the duty-cycle standards in § 1048.101(a) and (b). We may direct you to measure emissions on the dynamometer using the supplemental test procedures in § 1048.515 to show compliance with the field-testing standards in § 1048.101(c).

(2) Test the selected engines while they remain installed in the equipment. Use the field testing procedures in subpart F of this part. Measure emissions during normal operation of the equipment to show compliance with the field-testing standards in § 1048.101(c). We may direct you to include specific areas of normal operation.

(g) You may ask us to waive parts of the prescribed test procedures if they are not necessary to determine in-use compliance.

(h) Calculate the average emission levels for an engine family from the results for the set of tested engines. Round them to the number of decimal places in the emission standards expressed to one more decimal place.

§ 1048.415 What happens if in-use engines do not meet requirements?

(a) Determine the reason each in-use engine exceeds the emission standards.

(b) If the average emission levels calculated in § 1048.410(h) exceed any of the emission standards that apply, notify us within fifteen days of completing testing on this family. Otherwise follow the reporting instructions in § 1048.420.

(c) We will consider failure rates, average emission levels, and any defects—among other things—to decide on taking remedial action under this subpart (see 40 CFR 1068.505). We may consider the results from any voluntary additional testing you conduct. We may also consider information related to testing from other engine families showing that you designed them to exceed the minimum requirements for controlling emissions. We may order a recall before or after you complete testing of an engine family if we determine a substantial number of engines do not conform to section 213 of the Act or to this part.

(d) If in-use testing reveals a design or manufacturing defect that prevents engines from meeting the requirements of this part, you must correct the defect as soon as possible for any future production for engines in every family affected by the defect.

(e) You may voluntarily recall an engine family for emission failures, as described in 40 CFR 1068.535, unless we have ordered a recall for that family under 40 CFR 1068.505.

(f) You have the right to a hearing before we order you to recall your engines or implement an alternative remedy (see § 1048.820).

§ 1048.420 What in-use testing information must I report to EPA?

(a) In a report to us within three months after you finish testing an engine family, do all the following:

(1) Identify the engine family, model, serial number, and date of manufacture.

(2) For each engine inspected or considered for testing, identify whether the diagnostic system was functioning.

(3) Describe the specific reasons for disqualifying any engines for not being properly maintained or used.

(4) For each engine selected for testing, include the following information:

(i) Estimate the hours each engine was used before testing.

(ii) Describe all maintenance, adjustments, modifications, and repairs to each test engine.

(5) State the date and time of each test attempt.

(6) Include the results of all emission testing, including incomplete or invalidated tests, if any.

(b) Send electronic reports of in-use testing to the Designated Officer using an approved information format. If you want to use a different format, send us a written request with justification for a waiver.

(c) We will send copies of your reports to anyone from the public who asks for them. See § 1048.815 for information on how we treat information you consider confidential.

(d) We may ask for more information.

§ 1048.425 What records must I keep?

(a) Organize and maintain your records as described in this section. We may review your records at any time, so it is important to keep required information readily available.

(b) Keep paper records of your in-use testing for one full year after you complete all the testing required for an engine family in a model year. You may use any additional storage formats or media if you like.

(c) Keep a copy of the written reports described in § 1048.420.

(d) Keep any additional records related to the procurement process.

Subpart F—Test Procedures

§ 1048.501 What procedures must I use to test my engines?

(a) Use the equipment and procedures for spark-ignition engines in 40 CFR part 1065 to show your engines meet the duty-cycle emission standards in § 1048.101(a) and (b). Measure HC, NO_X, CO, and CO_2 emissions using the full-flow dilute sampling procedures in 40 CFR part 1065. Use the applicable duty cycles in §§ 1048.505 and 1048.510.

(b) We describe in § 1048.515 the supplemental procedures for showing that your engines meet the field-testing emission standards in § 1048.101(c).

(c) Use the fuels specified in 40 CFR part 1065, subpart C, for all the testing we require in this part, except as noted in § 1048.515. Use these test fuels or any commercially available fuel for service accumulation.

(d) To test engines for evaporative emissions, use the equipment and procedures specified for testing diurnal emissions in 40 CFR 86.107–96 and 86.133–96 with fuel meeting the specifications in 40 CFR part 1065, subpart C. Measure emissions from a test engine with a complete fuel system. Reported emission levels must be based on the highest emissions from three successive 24-hour periods of cycling temperatures. Note that you may not be required to test for evaporative emissions during certification if you certify by design, as specified in § 1048.245.

(e) You may use special or alternate procedures, as described in 40 CFR 1065.10.

(f) We may reject data you generate using alternate procedures if later testing with the procedures in 40 CFR part 1065 shows contradictory emission data.

§ 1048.505 What steady-state duty cycles apply for laboratory testing?

(a) Measure emissions by testing the engine on a dynamometer with one or more of the following sets of steady-state duty cycles to show that the engine meets the steady-state standards in § 1048.101(b):

(1) Use the 7-mode duty cycle described in the following table for engines from an engine family that will be used only in variable-speed applications:

TABLE 1 OF § 1048.505—7-MODE DUTY CYCLE [1]

Mode No.	Engine speed	Observed torque [2]	Minimum time in mode (minutes)	Weighting factors
1	Maximum test speed	25	3.0	0.06
2	Intermediate test speed	100	3.0	0.02
3	Intermediate test speed	75	3.0	0.05
4	Intermediate test speed	50	3.0	0.32
5	Intermediate test speed	25	3.0	0.30
6	Intermediate test speed	10	3.0	0.10
7	Idle	0	3.0	0.15

[1] This duty cycle is analogous to the C2 cycle specified in ISO 8178–4.
[2] The percent torque is relative to the maximum torque at the given engine speed.

(2) Use the 5-mode duty cycle described in the following table if you certify an engine family for operation only at a single, rated speed:

TABLE 2 OF § 1048.505—5-MODE DUTY CYCLE FOR CONSTANT-SPEED ENGINES [1]

Mode No.	Engine speed	Torque [2]	Minimum time in mode (minutes)	Weighting factors
1	Maximum test	100	3.0	0.05
2	Maximum test	75	3.0	0.25
3	Maximum test	50	3.0	0.30

TABLE 2 OF § 1048.505—5-MODE DUTY CYCLE FOR CONSTANT-SPEED ENGINES [1]

Mode No.	Engine speed	Torque [2]	Minimum time in mode (minutes)	Weighting factors
4	Maximum test	25	3.0	0.30
5	Maximum test	10	3.0	0.10

[1] This duty cycle is analogous to the D2 cycle specified in ISO 8178–4.
[2] The percent torque is relative to the maximum torque at maximum test speed.

(3) Use both of the duty cycles described in paragraphs (a)(1) and (a)(2) of this section if you will not restrict an engine family to constant-speed or variable-speed applications.

(4) Use only the duty cycle specified in paragraph (a)(2) of this section for all severe-duty engines.

(5) Use the 2-mode duty cycle described in the following table for high-load engines instead of the other duty cycles in this paragraph (a):

TABLE 3 OF § 1048.505—2-MODE DUTY CYCLE FOR HIGH-LOAD ENGINES [1]

Mode No.	Engine speed	Torque [2]	Minimum time in mode (minutes)	Weighting factors
1	Maximum test	100	3.0	0.50
2	Maximum test	75	3.0	0.50

[1] This duty cycle is derived from the D1 cycle specified in ISO 8178–4.
[2] The percent torque is relative to the maximum torque at maximum test speed.

(b) If we test an engine to confirm that it meets the duty-cycle emission standards, we will use the steady-state duty cycles that apply for that engine family.

(c) During idle mode, operate the engine with the following parameters:

(1) Hold the speed within your specifications.

(2) Keep the throttle at the idle-stop position.

(3) Keep engine torque under 5 percent of the peak torque value at maximum test speed.

(d) For the full-load operating mode, operate the engine at wide-open throttle.

(e) See 40 CFR part 1065 for detailed specifications of tolerances and calculations.

(f) In the normal test sequence described in 40 CFR part 1065, subpart F, steady-state testing generally follows the transient test. For those cases where we do not require transient testing, perform the steady-state test after an appropriate warm-up period, consistent with good engineering judgment.

§ 1048.510 What transient duty cycles apply for laboratory testing?

(a) Starting with the 2007 model year, measure emissions by testing the engine on a dynamometer with one of the following transient duty cycles to show that the engine meets the transient emission standards in § 1048.101(a):

(1) If you certify an engine family for constant-speed operation only, use the transient duty-cycle described in Appendix I of this part.

(2) For all other engines, use the transient duty-cycle described in Appendix II of this part.

(b) If we test an engine to confirm that it meets the duty-cycle emission standards, we will use the transient duty cycle that applies for that engine family.

(c) Warm up the test engine as follows:

(1) Operate the engine for the first 180 seconds of the appropriate duty cycle, then allow it to idle without load for 30 seconds. At the end of the 30-second idling period, start measuring emissions as the engine operates over the prescribed duty cycle. For severe-duty engines, this engine warm-up procedure may include up to 15 minutes of operation over the appropriate duty cycle.

(2) If the engine was already operating before a test, use good engineering judgment to let the engine cool down enough so measured emissions during the next test will accurately represent those from an engine starting at room temperature. For example, if an engine starting at room temperature warms up enough in three minutes to start closed-loop operation and achieve full catalyst activity, then minimal engine cooling is necessary before starting the next test.

(3) You are not required to measure emissions while the engine is warming up. However, you must design your emission-control system to start working as soon as possible after engine starting. In your application for certification, describe how your engine meets this objective (see § 1048.205(b)).

§ 1048.515 Field-testing procedures.

(a) This section describes the procedures to determine whether your engines meet the field-testing emission standards in § 1048.101(c). These procedures may include any normal engine operation and ambient conditions that the engines may experience in use. Paragraph (b) of this section defines the limits of what we will consider normal engine operation and ambient conditions. Use the test procedures we specify in § 1048.501, except for the provisions we specify in this section. Measure emissions with one of the following procedures:

(1) Remove the selected engines for testing in a laboratory. You can use an engine dynamometer to simulate normal operation, as described in this section.

(2) Test the selected engines while they remain installed in the equipment. In 40 CFR part 1065, subpart J, we describe the equipment and sampling methods for testing engines in the field. Use fuel meeting the specifications of 40 CFR 1065.210 or a fuel typical of what you would expect the engine to use in service.

(b) An engine's emissions may not exceed the levels we specify in § 1048.101(c) for any continuous sampling period of at least 120 seconds

under the following ranges of operation and operating conditions:

(1) Engine operation during the emission sampling period may include any normal operation, subject to the following restrictions:

(i) Average power must be over 5 percent of maximum brake power.

(ii) Continuous time at idle must not be greater than 120 seconds.

(iii) The sampling period may not begin until the engine has reached stable operating temperatures. For example, this would exclude engine operation after starting until the thermostat starts modulating coolant temperature.

(iv) The sampling period may not include engine starting.

(v) For engines that qualify for the alternate Tier 2 emission standards in § 1048.101(d), operation at 90 percent or more of maximum power must be less than 10 percent of the total sampling time. You may request our approval for a different power threshold.

(2) Engine testing may occur under any normal conditions without correcting measured emission levels, subject to the following restrictions:

(i) Barometric pressure must be between 80.0 and 103.3 kPa (600 and 775 mm Hg).

(ii) Ambient air temperature must be between 13° and 35° C.

Subpart G—Compliance Provisions

§ 1048.601 What compliance provisions apply to these engines?

Engine and equipment manufacturers, as well as owners, operators, and rebuilders of these engines, and all other persons, must observe the requirements and prohibitions in 40 CFR part 1068 and the requirements of the Act. The compliance provisions in this subpart apply only to the engines we regulate in this part.

§ 1048.605 What are the provisions for exempting engines from the requirements of this part if they are already certified under the motor-vehicle program?

(a) This section applies to you if you are an engine manufacturer. See § 1048.610 if you are not an engine manufacturer.

(b) The only requirements or prohibitions from this part that apply to an engine that is exempt under this section are in this section.

(c) If you meet all the following criteria and requirements regarding your new nonroad engine, it is exempt under this section:

(1) You must produce it by modifying an engine covered by a valid certificate of conformity under 40 CFR part 86.

(2) Do not make any changes to the certified engine that we could reasonably expect to increase its exhaust or evaporative emissions. For example, if you make any of the following changes to one of these engines, you do not qualify for this exemption:

(i) Change any fuel system or evaporative system parameters from the certified configuration (this does not apply to refueling emission controls).

(ii) Change any other emission-related components.

(iii) Modify or design the engine cooling system so that temperatures or heat rejection rates are outside the original engine manufacturer's specified ranges.

(3) Demonstrate that fewer than 50 percent of the engine model's total sales, from all companies, are used in nonroad applications.

(4) The engine must have the label we require under 40 CFR part 86.

(5) Add a permanent supplemental label to the engine in a position where it will remain clearly visible after installation in the equipment. In your engine's emission control information label, do the following:

(i) Include the heading: ''Nonroad Engine Emission Control Information''.

(ii) Include your full corporate name and trademark.

(iii) State: ''THIS ENGINE WAS ADAPTED FOR NONROAD USE WITHOUT AFFECTING ITS EMISSION CONTROLS.''.

(iv) State the date you finished modifying the engine (month and year).

(6) The original and supplemental labels must be readily visible after the engine is installed in the equipment or, if the equipment obscures the engine's emission control information label, the equipment manufacturer must attach duplicate labels, as described in 40 CFR 1068.105.

(7) Send the Designated Officer a signed letter by the end of each calendar year (or less often if we tell you) with all the following information:

(i) Identify your full corporate name, address, and telephone number.

(ii) List the engine models you expect to produce under this exemption in the coming year.

(iii) State: ''We produce each listed engine model for nonroad application without making any changes that could increase its certified emission levels, as described in 40 CFR 1048.605.''.

(d) If your engines do not meet the criteria listed in paragraph (c) of this section, they will be subject to the standards and prohibitions of this part. Producing these engines without a valid exemption or certificate of conformity would violate the prohibitions in 40 CFR 1068.101.

(e) If you are the original engine manufacturer of both the highway and nonroad versions of an exempted engine, you must send us emission test data on the applicable nonroad duty cycle(s). You may include the data in your application for certification or in your letter requesting the exemption.

(f) If you are the original engine manufacturer of an exempted engine that is modified by another company under this exemption, we may require you to send us emission test data on the applicable nonroad duty cycle(s). If we ask for this data, we will allow a reasonable amount of time to collect it.

(g) The engine exempted under this section must meet all applicable requirements from 40 CFR part 86. This applies to engine manufacturers, equipment manufacturers who use these engines, and all other persons as if these engines were used in a motor vehicle.

§ 1048.610 What are the provisions for producing nonroad equipment with engines already certified under the motor-vehicle program?

If you are not an engine manufacturer, you may produce nonroad equipment from complete or incomplete motor vehicles with the motor vehicle engine if you meet three criteria:

(a) The engine or vehicle is certified to 40 CFR part 86.

(b) The engine is not adjusted outside the engine manufacturer's specifications (see § 1048.605(c)(2)).

(c) The engine or vehicle is not modified in any way that may affect its emission control. This applies to exhaust and evaporative emission controls, but not refueling emission controls.

§ 1048.615 What are the provisions for exempting engines designed for lawn and garden applications?

This section is intended for engines designed for lawn and garden applications, but it applies to any engines meeting the size criteria in paragraph (a) of this section.

(a) If an engine meets all the following criteria, it is exempt from the requirements of this part:

(1) The engine must have a total displacement of 1,000 cc or less.

(2) The engine must have a maximum brake power of 30 kW or less.

(3) The engine must be in an engine family that has a valid certificate of conformity showing that it meets emission standards for Class II engines under 40 CFR part 90.

(b) The only requirements or prohibitions from this part that apply to an engine that meets the criteria in paragraph (a) of this section are in this section.

(c) If your engines do not meet the criteria listed in paragraph (a) of this section, they will be subject to the provisions of this part. Producing these engines without a valid exemption or certificate of conformity would violate the prohibitions in 40 CFR 1068.101.

(d) Engines exempted under this section are subject to all the requirements affecting engines under 40 CFR part 90. The requirements and restrictions of 40 CFR part 90 apply to anyone manufacturing these engines, anyone manufacturing equipment that uses these engines, and all other persons in the same manner as if these engines had a total maximum brake power at or below 19 kW.

§ 1048.620 What are the provisions for exempting large engines fueled by natural gas?

(a) If an engine meets all the following criteria, it is exempt from the requirements of this part:

(1) The engine must operate solely on natural gas.

(2) The engine must have maximum brake power 250 kW or higher.

(3) The engine must be in an engine family that has a valid certificate of conformity showing that it meets emission standards for engines of that power rating under 40 CFR part 89.

(b) The only requirements or prohibitions from this part that apply to an engine that is exempt under this section are in this section.

(c) If your engines do not meet the criteria listed in paragraph (a) of this section, they will be subject to the provisions of this part. Producing these engines without a valid exemption or certificate of conformity would violate the prohibitions in 40 CFR 1068.101.

(d) Engines exempted under this section are subject to all the requirements affecting engines under 40 CFR part 89. The requirements and restrictions of 40 CFR part 89 apply to anyone manufacturing these engines, anyone manufacturing equipment that uses these engines, and all other persons in the same manner as if these were nonroad diesel engines.

(e) You may request an exemption under this section by submitting an application for certification for the engines under 40 CFR part 89.

§ 1048.625 What special provisions apply to engines using noncommercial fuels?

If you are unable to meet this part's requirements with engines using noncommercial fuels (such as unrefined natural gas released by oil wells), the following provisions apply for those engines:

(a) Create a separate engine family.

(b) Disregard the limits on adjustable parameters in § 1048.115(e), but make sure the engines meet emission standards with normal settings when the engine is using fuel meeting the specifications of 40 CFR part 1065, subpart C.

(c) Add the following information to the emission control information label specified in § 1048.135:

(1) Include instructions describing how to adjust the engine to operate in a way that maintains the effectiveness of the emission-control system.

(2) State: ''THIS ENGINE IS CERTIFIED TO OPERATE IN APPLICATIONS USING NONCOMMERCIAL FUEL. USING IT IN AN APPLICATION INVOLVING ONLY COMMERCIAL FUELS MAY BE A VIOLATION OF FEDERAL LAW SUBJECT TO CIVIL PENALTY.''.

(d) Keep records to document the destinations and quantities of engines produced under this section.

Subpart H—[Reserved]

Subpart I—Definitions and Other Reference Information

§ 1048.801 What definitions apply to this part?

The following definitions apply to this part. The definitions apply to all subparts unless we note otherwise. All undefined terms have the meaning the Act gives to them. The definitions follow:

Act means the Clean Air Act, as amended, 42 U.S.C. 7401 *et seq.*

Adjustable parameter means any device, system, or element of design that someone can adjust (including those which are difficult to access) and that, if adjusted, may affect emissions or engine performance during emission testing or normal in-use operation. You may ask us to exclude a parameter that is difficult to access if it cannot be adjusted to affect emissions without significantly degrading performance, or if you otherwise show us that it will not be adjusted in a way that affects emissions during in-use operation.

Aftertreatment means relating to any system, component, or technology mounted downstream of the exhaust valve or exhaust port whose design function is to reduce exhaust emissions.

Aircraft means any vehicle capable of sustained air travel above treetop heights.

All-terrain vehicle has the meaning we give in 40 CFR 1051.801.

Auxiliary emission-control device means any element of design that senses temperature, engine rpm, motive speed, transmission gear, atmospheric pressure, manifold pressure or vacuum, or any other parameter to activate, modulate, delay, or deactivate the operation of any part of the emission-control system. This also includes any other feature that causes in-use emissions to be higher than those measured under test conditions, except as we allow under this part.

Blue Sky Series engine means an engine meeting the requirements of § 1048.140.

Brake power means the usable power output of the engine, not including power required to operate fuel pumps, oil pumps, or coolant pumps.

Broker means any entity that facilitates a trade of emission credits between a buyer and seller.

Calibration means the set of specifications and tolerances specific to a particular design, version, or application of a component or assembly capable of functionally describing its operation over its working range.

Certification means obtaining a certificate of conformity for an engine family that complies with the emission standards and requirements in this part.

Compression-ignition means relating to a type of reciprocating, internal-combustion engine that is not a spark-ignition engine.

Constant-speed engine means an engine governed to operate at a single speed.

Crankcase emissions means airborne substances emitted to the atmosphere from any part of the engine crankcase's ventilation or lubrication systems. The crankcase is the housing for the crankshaft and other related internal parts.

Designated Officer means the Manager, Engine Programs Group (6405–J), U.S. Environmental Protection Agency, 1200 Pennsylvania Ave., Washington, DC 20460.

Emission-control system means any device, system, or element of design that controls or reduces the regulated emissions from an engine.

Emission-data engine means an engine that is tested for certification.

Emission-related maintenance means maintenance that substantially affects emissions or is likely to substantially affect emissions deterioration.

Engine family means a group of engines with similar emission characteristics, as specified in § 1048.230.

Engine manufacturer means the manufacturer of the engine. See the definition of ''manufacturer'' in this section.

Fuel system means all components involved in transporting, metering, and mixing the fuel from the fuel tank to the

combustion chamber(s), including the fuel tank, fuel tank cap, fuel pump, fuel filters, fuel lines, carburetor or fuel-injection components, and all fuel-system vents.

Good engineering judgment has the meaning we give in 40 CFR 1068.5.

High-cost warranted part means a component covered by the emission-related warranty with a replacement cost (at the time of certification) exceeding $400 (in 1998 dollars). Adjust this value using the most recent annual average consumer price index information published by the U.S. Bureau of Labor Statistics. For this definition, replacement cost includes the retail cost of the part plus labor and standard diagnosis.

High-load engine means an engine for which the engine manufacturer can provide clear evidence that operation below 75 percent of maximum load in it's final application will be rare.

Hydrocarbon (HC) means the hydrocarbon group on which the emission standards are based for each fuel type. For gasoline- and LPG-fueled engines, HC means total hydrocarbon (THC). For natural gas-fueled engines, HC means nonmethane hydrocarbon (NMHC). For alcohol-fueled engines, HC means total hydrocarbon equivalent (THCE).

Identification number means a unique specification (for example, model number/serial number combination) that allows someone to distinguish a particular engine from other similar engines.

Intermediate test speed has the meaning we give in 40 CFR 1065.515.

Manufacturer has the meaning given in section 216(1) of the Act. In general, this term includes any person who manufactures an engine, vehicle, or piece of equipment for sale in the United States or otherwise introduces a new nonroad engine into commerce in the United States. This includes importers who import engines, equipment, or vehicles for resale.

Marine engine means an engine that someone installs or intends to install on a marine vessel. There are two kinds of marine engines:

(1) *Propulsion marine engine* means a marine engine that moves a vessel through the water or directs the vessel's movement.

(2) *Auxiliary marine engine* means a marine engine not used for propulsion.

Marine vessel means a vehicle that is capable of operation in water but is not capable of operation out of water. Amphibious vehicles are not marine vessels.

Maximum brake power means the maximum brake power an engine produces at maximum test speed.

Maximum test speed has the meaning we give in 40 CFR 1065.515.

Maximum test torque has the meaning we give in 40 CFR 1065.1001.

Model year means one of the following things:

(1) For freshly manufactured engines (see definition of ''new nonroad engine,'' paragraph (1)), model year means one of the following:

(i) Calendar year.

(ii) Your annual new model production period if it is different than the calendar year. This must include January 1 of the calendar year for which the model year is named. It may not begin before January 2 of the previous calendar year and it must end by December 31 of the named calendar year.

(2) For an engine that is converted to a nonroad engine after being placed into service in a motor vehicle, model year means the calendar year in which the engine was originally produced (see definition of ''new nonroad engine,'' paragraph (2)).

(3) For a nonroad engine excluded under § 1048.5 that is later converted to operate in an application that is not excluded, model year means the calendar year in which the engine was originally produced (see definition of ''new nonroad engine,'' paragraph (3)).

(4) For engines that are not freshly manufactured but are installed in new nonroad equipment, model year means the calendar year in which the engine is installed in the new nonroad equipment. This installation date is based on the time that final assembly of the equipment is complete (see definition of ''new nonroad engine,'' paragraph (4)).

(5) For an engine modified by an importer (not the original engine manufacturer) who has a certificate of conformity for the imported engine (see definition of ''new nonroad engine,'' paragraph (5)), model year means one of the following:

(i) The calendar year in which the importer finishes modifying and labeling the engine.

(ii) Your annual production period for producing engines if it is different than the calendar year; follow the guidelines in paragraph (1)(ii) of this definition.

(6) For an engine you import that does not meet the criteria in paragraphs (1) through (5) of the definition of ''new nonroad engine,'' model year means the calendar year in which the engine manufacturer completed the original assembly of the engine. In general, this applies to used equipment that you import without conversion or major modification.

Motor vehicle has the meaning we give in 40 CFR 85.1703(a). In general, *motor vehicle* means a self-propelled vehicle that can transport one or more people or any material, but doesn't include any of the following:

(1) Vehicles having a maximum ground speed over level, paved surfaces no higher than 40 km per hour (25 miles per hour).

(2) Vehicles that lack features usually needed for safe, practical use on streets or highways—for example, safety features required by law, a reverse gear (except for motorcycles), or a differential.

(3) Vehicles whose operation on streets or highways would be unsafe, impractical, or highly unlikely. Examples are vehicles with tracks instead of wheels, very large size, or features associated with military vehicles, such as armor or weaponry.

New nonroad engine means any of the following things:

(1) A freshly manufactured nonroad engine for which the ultimate buyer has never received the equitable or legal title. This kind of vehicle might commonly be thought of as ''brand new.'' In the case of this paragraph (1), the engine is no longer new when the ultimate buyer receives this title or the product is placed into service, whichever comes first.

(2) An engine originally manufactured as a motor vehicle engine that is later intended to be used in a piece of nonroad equipment. In this case, the engine is no longer a motor vehicle engine and becomes a ''new nonroad engine''. The engine is no longer new when it is placed into nonroad service.

(3) A nonroad engine that has been previously placed into service in an application we exclude under § 1048.5, where that engine is installed in a piece of equipment for which these exclusions do not apply. The engine is no longer new when it is placed into nonroad service. For example, this would apply to a stationary engine that is no longer used in a stationary application.

(4) An engine not covered by paragraphs (1) through (3) of this definition that is intended to be installed in new nonroad equipment. The engine is no longer new when the ultimate buyer receives a title for the equipment or the product is placed into service, whichever comes first. This generally includes installation of used engines in new equipment.

(5) An imported nonroad engine covered by a certificate of conformity issued under this part, where someone other than the original engine

manufacturer modifies the engine after its initial assembly and holds the certificate. The engine is no longer new when it is placed into nonroad service.

(6) An imported nonroad engine that is not covered by a certificate of conformity issued under this part at the time of importation. This addresses uncertified engines and vehicles that have been placed into service in other countries and that someone seeks to import into the United States. Importation of this kind of new nonroad engine (or vehicle containing such an engine) is generally prohibited by 40 CFR part 1068.

New nonroad equipment means either of the following things:

(1) A nonroad vehicle or other piece of equipment for which the ultimate buyer has never received the equitable or legal title. The product is no longer new when the ultimate buyer receives this title or the product is placed into service, whichever comes first.

(2) An imported nonroad piece of equipment with an engine not covered by a certificate of conformity issued under this part at the time of importation and manufactured after the date for applying the requirements of this part.

Noncommercial fuel means a fuel that is not marketed or sold as a commercial product. For example, this includes methane produced and released from landfills or oil wells.

Noncompliant engine means an engine that was originally covered by a certificate of conformity, but is not in the certified configuration or otherwise does not comply with the conditions of the certificate.

Nonconforming engine means an engine not covered by a certificate of conformity that would otherwise be subject to emission standards.

Nonmethane hydrocarbon means the difference between the emitted mass of total hydrocarbons and the emitted mass of methane.

Nonroad means relating to nonroad engines or equipment that includes nonroad engines.

Nonroad engine has the meaning given in 40 CFR 1068.30. In general this means all internal-combustion engines except motor vehicle engines, stationary engines, or engines used solely for competition. This part does not apply to all nonroad engines (see § 1048.5).

Off-highway motorcycle has the meaning we give in 40 CFR 1051.801. (Note: highway motorcycles are regulated under 40 CFR part 86.)

Oxides of nitrogen has the meaning given it in 40 CFR part 1065

Placed into service means used for its intended purpose.

Point of first retail sale means the location at which the retail sale occurs. This generally means a dealership.

Revoke means to discontinue the certificate for an engine family. If we revoke a certificate, you must apply for a new certificate before continuing to produce the affected vehicles or engines. This does not apply to vehicles or engines you no longer possess.

Round means to round numbers according to ASTM E29–02 (incorporated by reference in § 1048.810), unless otherwise specified.

Scheduled maintenance means adjusting, repairing, removing, disassembling, cleaning, or replacing components or systems that is periodically needed to keep a part from failing or malfunctioning. It also may mean actions you expect are necessary to correct an overt indication of failure or malfunction for which periodic maintenance is not appropriate.

Severe-duty application includes concrete saws, concrete pumps, and any other application where an engine manufacturer can provide clear evidence that the majority of installations need air-cooled engines as a result of operation in a severe-duty environment.

Severe-duty engine means an engine from an engine family in which the majority of engines are installed in severe-duty applications.

Small-volume engine manufacturer means a company with fewer than 200 employees. This includes any employees working for parent or subsidiary companies.

Snowmobile has the meaning we give in 40 CFR 1051.801.

Spark-ignition means relating to a gasoline-fueled engine or any other type of engine with a spark plug (or other sparking device) and with operating characteristics significantly similar to the theoretical Otto combustion cycle. Spark-ignition engines usually use a throttle to regulate intake air flow to control power during normal operation.

Stationary engine means an internal combustion engine that is neither a nonroad engine, nor a motor-vehicle engine, nor an engine used solely for competition (see the definition of nonroad engine in 40 CFR 1068.30). In general this includes fixed engines and all portable or transportable engines that stay in a single site at a building, structure, facility, or installation for at least a full year; this does not include an engine installed in equipment that has the ability to propel itself. For year-round sources, a full year is 12 consecutive months. For seasonal sources, a full year is a full annual operating period of at least three months. A seasonal source is a site with engines operating only part of the year for at least two consecutive years. If you replace an engine with one that does the same or similar work in the same place, you may apply the previous engine's service to your calculation for residence time. If you move a stationary engine anytime in its life after it has been in place for at least a full year, it becomes a nonroad engine subject to emission standards unless it stays at the new location for a full year.

Stoichiometry means the proportion of a mixture of air and fuel such that the fuel is fully oxidized with no remaining oxygen. For example, stoichiometric combustion in gasoline engines typically occurs at an air-fuel mass ratio of about 14.7.

Suspend means to temporarily discontinue the certificate for an engine family. If we suspend a certificate, you may not sell vehicles or engines from that engine family unless we reinstate the certificate or approve a new one.

Test engine means an engine in a test sample.

Test sample means the collection of engines selected from the population of an engine family for emission testing.

Total hydrocarbon means the combined mass organic compounds measured by our total hydrocarbon test procedure, expressed as a hydrocarbon with a hydrogen-to-carbon mass ratio of 1.85:1.

Total hydrocarbon equivalent means the sum of the carbon mass contributions of non-oxygenated hydrocarbons, alcohols and aldehydes, or other organic compounds that are measured separately as contained in a gas sample, expressed as petroleum-fueled engine hydrocarbons. The hydrogen-to-carbon ratio of the equivalent hydrocarbon is 1.85:1.

Tier 1 means relating to the emission standards and other requirements that apply beginning with the 2004 model year.

Tier 2 means relating to the emission standards and other requirements that apply beginning with the 2007 model year.

Ultimate buyer means ultimate purchaser.

Ultimate purchaser means, with respect to any new nonroad equipment or new nonroad engine, the first person who in good faith purchases such new nonroad equipment or new nonroad engine for purposes other than resale.

United States means the States, the District of Columbia, the Commonwealth of Puerto Rico, the Commonwealth of the Northern Mariana Islands, Guam, American Samoa, the

U.S. Virgin Islands, and the Trust Territory of the Pacific Islands.

Upcoming model year means for an engine family the model year after the one currently in production.

U.S.-directed production volume means the number of engine units, subject to the requirements of this part, produced by a manufacturer for which the manufacturer has a reasonable assurance that sale was or will be made to ultimate buyers in the United States.

Useful life means the period during which the engine is designed to properly function in terms of reliability and fuel consumption, without being remanufactured, specified as a number of hours of operation or calendar years. It is the period during which a new nonroad engine is required to comply with all applicable emission standards. See § 1048.101(g).

Variable-speed engine means an engine that is not a constant-speed engine.

Void means to invalidate a certificate or an exemption. If we void a certificate, all the vehicles produced under that engine family for that model year are considered noncompliant, and you are liable for each vehicle produced under the certificate and may face civil or criminal penalties or both. If we void an exemption, all the vehicles produced under that exemption are considered uncertified (or nonconforming), and you are liable for each vehicle produced under the exemption and may face civil or criminal penalties or both. You may not produce any additional vehicles using the voided exemption.

Volatile liquid fuel means any fuel other than diesel or biodiesel that is a liquid at atmospheric pressure.

Wide-open throttle means maximum throttle opening. Unless this is specified at a given speed, it refers to maximum throttle opening at maximum speed. For electronically controlled or other engines with multiple possible fueling rates, wide-open throttle also means the maximum fueling rate at maximum throttle opening under test conditions.

§ 1048.805 What symbols, acronyms, and abbreviations does this part use?

The following symbols, acronyms, and abbreviations apply to this part:

°C degrees Celsius.
ASTM American Society for Testing and Materials.
cc cubic centimeters.
CFR Code of Federal Regulations.
cm centimeter.
CO carbon monoxide.
CO_2 carbon dioxide.
EPA Environmental Protection Agency.
g/kW-hr grams per kilowatt-hour.
HC hydrocarbon.
ISO International Organization for Standardization.
kPa kilopascals.
kW kilowatts.
LPG liquefied petroleum gas.
m meters.
MIL malfunction-indicator light.
mm Hg millimeters of mercury.
NMHC nonmethane hydrocarbons.
NO_X oxides of nitrogen (NO and NO_2).
psi pounds per square inch of absolute pressure.
psig pounds per square inch of gauge pressure.
rpm revolutions per minute.
SAE Society of Automotive Engineers.
SI spark-ignition.
THC total hydrocarbon.
THCE total hydrocarbon equivalent.
U.S.C. United States Code.

§ 1048.810 What materials does this part reference?

We have incorporated by reference the documents listed in this section. The Director of the Federal Register approved the incorporation by reference as prescribed in 5 U.S.C. 552(a) and 1 CFR part 51. Anyone may inspect copies at the U.S. EPA, Air and Radiation Docket and Information Center, 1301 Constitution Ave., NW., Room B102, EPA West Building, Washington, DC 20460 or the Office of the Federal Register, 800 N. Capitol St., NW., 7th Floor, Suite 700, Washington, DC.

(a) *ASTM material.* Table 1 of § 1048.810 lists material from the American Society for Testing and Materials that we have incorporated by reference. The first column lists the number and name of the material. The second column lists the sections of this part where we reference it. Anyone may purchase copies of these materials from the American Society for Testing and Materials, 100 Barr Harbor Dr., West Conshohocken, PA 19428. Table 1 follows:

TABLE 1 OF § 1048.810.—ASTM MATERIALS

Document number and name	Part 1048 reference
ASTM E29–02, Standard Practice for Using Significant Digits in Test Data to Determine Conformance with Specifications	1048.801

(b) *SAE material.* Table 2 of § 1048.810 lists material from the Society of Automotive Engineering that we have incorporated by reference. The first column lists the number and name of the material. The second column lists the sections of this part where we reference it. Anyone may purchase copies of these materials from the Society of Automotive Engineers, 400 Commonwealth Drive, Warrendale, PA 15096. Table 2 follows:

TABLE 2 OF § 1048.810.—SAE MATERIALS

Document number and name	Part 1048 reference
SAE J1930, Electrical/Electronic Systems Diagnostic Terms, Definitions, Abbreviations, and Acronyms, May 1998	1048.135
SAE J2260, Nonmetallic Fuel System Tubing with One or More Layers, November 1996	1048.105

(c) *ISO material.* Table 3 of § 1048.810 lists material from the International Organization for Standardization that we have incorporated by reference. The first column lists the number and name of the material. The second column lists the section of this part where we reference it. Anyone may purchase copies of these materials from the International Organization for Standardization, Case Postale 56, CH–1211 Geneva 20, Switzerland. Table 3 follows:

TABLE 3 OF § 1048.810.—ISO MATERIALS

Document number and name	Part 1048 reference
ISO 9141–2 Road vehicles—Diagnostic systems—Part 2: CARB requirements for interchange of digital information, February 1994	1048.110
ISO 14230–4 Road vehicles—Diagnostic systems—Keyword Protocol 2000—Part 4: Requirements for emission-related systems, June 2000	1048.110

§ 1048.815 How should I request EPA to keep my information confidential?

(a) Clearly show what you consider confidential by marking, circling, bracketing, stamping, or some other method. We will store your confidential information as described in 40 CFR part 2. Also, we will disclose it only as specified in 40 CFR part 2.

(b) If you send us a second copy without the confidential information, we will assume it contains nothing confidential whenever we need to release information from it.

(c) If you send us information without claiming it is confidential, we may make it available to the public without further notice to you, as described in 40 CFR 2.204.

§ 1048.820 How do I request a hearing?

See 40 CFR part 1068, subpart G, for information related to hearings.

Appendix I to Part 1048—Large Spark-ignition (SI) Transient Cycle for Constant-Speed Engines

The following table shows the transient duty-cycle for constant-speed engines, as described in § 1048.510:

Time(s)	Normalized speed (percent)	Normalized torque (percent)
1	58	5
2	58	5
3	58	5
4	58	5
5	58	5
6	58	5
7	58	5
8	58	5
9	58	5
10	58	5
11	58	5
12	65	8
13	72	9
14	79	12
15	86	14
16	93	16
17	93	16
18	93	16
19	93	16
20	93	16
21	93	16
22	93	16
23	93	16
24	93	31
25	93	30
26	93	27
27	93	23
28	93	24
29	93	21
30	93	20
31	93	18
32	93	16
33	93	18
34	93	16
35	93	17
36	93	20
37	93	20
38	93	22
39	93	20
40	93	17
41	93	17
42	93	17
43	93	16
44	93	18
45	93	18
46	93	21
47	93	21
48	93	18
49	94	24
50	93	28
51	93	23
52	93	19
53	93	20
54	93	20
55	93	29
56	93	23
57	93	25
58	93	23
59	93	23
60	93	23
61	93	22
62	93	21
63	93	22
64	93	30
65	93	33
66	93	25
67	93	29
68	93	27
69	93	23
70	93	21
71	93	21
72	93	19
73	93	20
74	93	24
75	93	23
76	93	21
77	93	44
78	93	34
79	93	28
80	93	37
81	93	29
82	93	27
83	93	33
84	93	28
85	93	22
86	96	30
87	95	25
88	95	17
89	95	13
90	95	10
91	95	9
92	95	8
93	95	7
94	95	7
95	95	6
96	95	6
97	93	37
98	93	35
99	93	29
100	93	23
101	93	23
102	93	21
103	93	20
104	93	29
105	93	27
106	93	26
107	93	35
108	93	43
109	95	35
110	95	24
111	95	17
112	95	13
113	95	10
114	95	9
115	95	8
116	95	7
117	95	7
118	95	6
119	93	36
120	93	30
121	93	25
122	93	21
123	93	22
124	93	19
125	93	34
126	93	36
127	93	31
128	93	26
129	93	27
130	93	22
131	93	22
132	93	18
133	93	18
134	93	19
135	93	19
136	93	23
137	93	22
138	93	20
139	93	23
140	93	20
141	93	18
142	93	18
143	93	16
144	93	19
145	94	25
146	93	30

Time(s)	Normalized speed (percent)	Normalized torque (percent)
147	93	29
148	93	23
149	93	24
150	93	22
151	94	20
152	93	17
153	93	16
154	93	16
155	93	15
156	93	17
157	93	18
158	93	20
159	93	21
160	93	18
161	93	17
162	92	54
163	93	38
164	93	29
165	93	24
166	93	24
167	93	24
168	93	23
169	93	20
170	93	20
171	93	18
172	93	19
173	93	19
174	93	16
175	93	16
176	93	16
177	93	18
178	93	21
179	93	20
180	93	20
181	93	17
182	93	19
183	93	17
184	93	18
185	93	16
186	93	16
187	93	16
188	93	17
189	93	16
190	93	17
191	93	18
192	93	17
193	93	16
194	93	17
195	93	17
196	93	22
197	93	19
198	93	19
199	95	21
200	95	16
201	95	12
202	95	10
203	96	8
204	96	7
205	95	7
206	96	7
207	95	6
208	96	6
209	96	6
210	88	6
211	89	48
212	93	34
213	93	27
214	93	26
215	93	25
216	93	22
217	93	23
218	93	21
219	93	21
220	93	23
221	93	23
222	93	23
223	93	23
224	93	23
225	93	22
226	93	22
227	93	24
228	93	23
229	93	23
230	93	21
231	93	20
232	93	20
233	93	20
234	93	22
235	93	26
236	93	22
237	93	20
238	93	18
239	93	22
240	93	20
241	94	27
242	93	22
243	93	23
244	93	21
245	93	22
246	95	22
247	95	16
248	95	12
249	95	10
250	95	9
251	95	8
252	96	7
253	95	7
254	95	6
255	92	42
256	93	36
257	93	33
258	92	60
259	93	48
260	93	36
261	93	30
262	93	28
263	93	24
264	93	24
265	93	23
266	93	23
267	93	25
268	93	27
269	93	29
270	93	26
271	93	26
272	93	21
273	93	23
274	93	23
275	94	23
276	93	40
277	94	67
278	93	46
279	93	38
280	93	29
281	93	28
282	93	27
283	93	29
284	93	28
285	94	34
286	93	31
287	93	30
288	94	42
289	93	31
290	93	29
291	93	27
292	93	23
293	93	23
294	93	20
295	93	20
296	93	23
297	93	23
298	93	24
299	93	25
300	93	20
301	93	25
302	93	23
303	93	23
304	93	24
305	93	28
306	93	23
307	93	24
308	93	34
309	93	31
310	93	35
311	93	31
312	93	32
313	93	31
314	93	30
315	93	23
316	93	23
317	93	36
318	93	32
319	93	25
320	93	31
321	93	33
322	93	31
323	93	27
324	93	24
325	93	19
326	96	21
327	96	16
328	95	12
329	95	10
330	95	8
331	95	8
332	95	7
333	95	7
334	95	6
335	95	6
336	95	6
337	87	6
338	57	6
339	58	6
340	58	6
341	58	6
342	58	6
343	58	6
344	58	6
345	58	6
346	58	6
347	58	6
348	58	6
349	58	6
350	58	6
351	58	6
352	95	73
353	93	65
354	93	52
355	93	38
356	93	30
357	93	31
358	93	26
359	93	21
360	93	22
361	93	26
362	93	23

Time(s)	Normalized speed (percent)	Normalized torque (percent)
363	93	19
364	93	27
365	93	42
366	93	29
367	94	25
368	94	26
369	94	29
370	93	28
371	93	23
372	93	21
373	93	26
374	93	23
375	93	20
376	94	23
377	93	18
378	93	19
379	93	23
380	93	19
381	93	16
382	93	25
383	93	22
384	93	20
385	93	25
386	94	28
387	93	23
388	93	23
389	93	25
390	93	23
391	93	20
392	93	19
393	93	24
394	93	20
395	93	18
396	93	21
397	95	22
398	96	16
399	96	12
400	95	10
401	96	9
402	95	8
403	96	7
404	96	7
405	96	6
406	96	6
407	95	6
408	91	6
409	58	6
410	58	6
411	58	6
412	58	6
413	58	6
414	58	6
415	58	6
416	58	6
417	58	6
418	58	6
419	58	6
420	58	6
421	58	6
422	58	6
423	58	6
424	58	6
425	58	6
426	58	6
427	58	6
428	58	6
429	58	6
430	58	6
431	58	6
432	58	6
433	58	6
434	58	6
435	58	6
436	58	6
437	58	6
438	58	6
439	58	6
440	58	6
441	58	6
442	58	6
443	93	66
444	93	48
445	93	40
446	93	34
447	93	28
448	93	23
449	93	28
450	93	27
451	93	23
452	93	19
453	93	25
454	93	24
455	93	22
456	93	31
457	93	36
458	93	28
459	93	25
460	93	35
461	93	34
462	93	29
463	93	37
464	93	36
465	93	38
466	93	31
467	93	29
468	93	34
469	93	36
470	93	34
471	93	31
472	93	26
473	93	21
474	94	16
475	96	19
476	96	15
477	95	11
478	96	10
479	95	8
480	95	7
481	95	7
482	96	7
483	96	6
484	96	6
485	95	6
486	85	6
487	56	74
488	93	52
489	93	42
490	93	36
491	93	35
492	93	33
493	93	38
494	93	40
495	93	29
496	93	23
497	93	23
498	93	24
499	93	24
500	93	20
501	93	19
502	93	16
503	93	21
504	93	23
505	93	24
506	93	22
507	93	18
508	93	21
509	95	18
510	95	20
511	95	15
512	96	11
513	95	10
514	96	8
515	95	7
516	95	7
517	95	7
518	95	6
519	96	6
520	96	6
521	83	6
522	56	6
523	58	6
524	72	54
525	94	51
526	93	42
527	93	42
528	93	31
529	93	25
530	93	21
531	93	17
532	93	15
533	93	15
534	93	16
535	93	15
536	93	14
537	93	15
538	93	16
539	94	15
540	93	45
541	93	45
542	93	41
543	93	33
544	93	26
545	93	21
546	93	20
547	93	17
548	93	16
549	93	17
550	93	16
551	93	14
552	93	16
553	93	15
554	93	14
555	93	16
556	93	15
557	93	14
558	93	13
559	93	14
560	93	14
561	93	15
562	93	17
563	93	17
564	93	22
565	93	22
566	93	19
567	93	19
568	93	20
569	93	18
570	93	20
571	93	20
572	93	42
573	93	32
574	93	25
575	93	26
576	93	23
577	93	21
578	93	23

Time(s)	Normalized speed (percent)	Normalized torque (percent)
579	93	19
580	93	21
581	93	20
582	93	20
583	93	20
584	93	18
585	93	18
586	93	21
587	93	19
588	93	21
589	93	19
590	93	19
591	93	18
592	93	18
593	93	17
594	93	16
595	93	16
596	93	15
597	93	16
598	93	19
599	93	52
600	93	45
601	95	39
602	95	39
603	95	39
604	95	39
605	94	30
606	95	30
607	95	29
608	95	24
609	94	30
610	95	28
611	94	25
612	94	29
613	95	32
614	95	33
615	95	44
616	99	37
617	98	27
618	98	19
619	98	13
620	98	11
621	98	9
622	98	7
623	98	7
624	98	6
625	98	6
626	98	6
627	98	5
628	69	6
629	49	5
630	51	5
631	51	5
632	51	5
633	51	6
634	51	6
635	51	6
636	51	6
637	51	5
638	51	5
639	51	5
640	51	5
641	51	6
642	51	6
643	51	6
644	51	6
645	51	5
646	51	6
647	51	5
648	51	6
649	51	5
650	96	35
651	95	29
652	95	26
653	95	31
654	95	34
655	95	29
656	95	29
657	95	30
658	95	24
659	95	19
660	95	23
661	95	21
662	95	22
663	95	19
664	95	18
665	95	20
666	94	60
667	95	48
668	95	39
669	95	36
670	95	27
671	95	22
672	95	19
673	95	22
674	95	19
675	94	17
676	95	27
677	95	24
678	98	19
679	98	19
680	98	14
681	98	11
682	98	9
683	98	8
684	98	7
685	98	6
686	98	6
687	98	6
688	98	6
689	98	5
690	81	5
691	49	5
692	78	48
693	95	37
694	95	31
695	94	32
696	94	34
697	95	29
698	95	25
699	94	26
700	95	28
701	95	27
702	94	28
703	95	30
704	95	27
705	95	26
706	95	27
707	95	25
708	95	26
709	95	25
710	95	23
711	95	20
712	95	23
713	95	20
714	95	18
715	94	22
716	95	19
717	95	23
718	95	27
719	95	26
720	95	23
721	95	20
722	99	23
723	98	20
724	98	14
725	98	11
726	98	9
727	98	8
728	98	7
729	98	6
730	98	6
731	98	6
732	98	5
733	98	5
734	73	6
735	49	5
736	50	77
737	95	39
738	95	30
739	95	28
740	94	31
741	95	36
742	95	36
743	95	30
744	95	26
745	95	27
746	95	22
747	95	18
748	95	19
749	95	25
750	94	25
751	95	21
752	95	22
753	95	27
754	95	27
755	95	27
756	95	24
757	94	20
758	94	23
759	94	26
760	95	25
761	95	25
762	95	21
763	95	28
764	94	39
765	95	32
766	95	24
767	95	19
768	98	20
769	98	17
770	98	12
771	98	10
772	98	8
773	98	7
774	98	6
775	98	6
776	95	61
777	94	51
778	95	40
779	94	35
780	94	36
781	94	32
782	95	24
783	94	19
784	94	19
785	95	19
786	95	19
787	94	18
788	94	20
789	94	23
790	94	22
791	95	23
792	94	20
793	94	18
794	95	16

Time(s)	Normalized speed (percent)	Normalized torque (percent)
795	95	17
796	94	16
797	94	16
798	94	17
799	94	18
800	94	21
801	95	21
802	94	19
803	95	18
804	94	19
805	95	22
806	95	21
807	95	19
808	94	20
809	94	22
810	94	22
811	94	22
812	95	23
813	94	22
814	95	22
815	95	19
816	95	16
817	95	14
818	95	18
819	95	18
820	94	20
821	94	22
822	94	19
823	95	18
824	95	17
825	95	19
826	95	19
827	95	19
828	94	19
829	94	21
830	94	19
831	94	17
832	94	18
833	94	21
834	94	19
835	95	18
836	95	19
837	95	17
838	94	15
839	94	17
840	95	19
841	94	22
842	94	21
843	94	18
844	94	16
845	95	14
846	95	14
847	94	19
848	95	20
849	95	23
850	98	23
851	98	22
852	98	16
853	98	12
854	98	9
855	98	8
856	98	7
857	98	6
858	98	6
859	98	6
860	98	5
861	98	5
862	80	5
863	49	5
864	51	5
865	51	5
866	51	6
867	51	6
868	51	6
869	51	6
870	51	5
871	51	6
872	51	7
873	96	45
874	94	44
875	94	34
876	94	41
877	95	44
878	94	32
879	95	26
880	94	20
881	95	29
882	95	27
883	95	21
884	95	34
885	95	31
886	94	26
887	95	22
888	95	23
889	95	19
890	94	18
891	94	20
892	94	26
893	95	29
894	94	32
895	95	26
896	95	34
897	95	30
898	95	24
899	95	19
900	94	17
901	94	16
902	98	19
903	98	17
904	98	12
905	98	10
906	98	8
907	98	7
908	98	6
909	98	6
910	98	6
911	98	5
912	98	5
913	98	5
914	69	5
915	49	5
916	51	5
917	51	6
918	51	6
919	69	75
920	95	70
921	95	57
922	94	49
923	94	38
924	95	43
925	94	51
926	94	41
927	98	42
928	95	89
929	95	66
930	94	52
931	95	41
932	95	34
933	95	34
934	94	30
935	94	30
936	95	29
937	94	28
938	95	24
939	94	34
940	95	26
941	94	36
942	95	27
943	95	25
944	95	26
945	94	21
946	94	19
947	98	21
948	93	53
949	94	45
950	94	35
951	95	28
952	95	23
953	95	20
954	95	17
955	94	19
956	94	18
957	94	18
958	94	18
959	94	19
960	97	17
961	98	19
962	98	14
963	98	11
964	98	9
965	98	7
966	98	7
967	98	6
968	98	6
969	98	6
970	98	5
971	98	5
972	82	5
973	49	5
974	51	6
975	51	6
976	51	6
977	51	5
978	51	6
979	72	58
980	94	36
981	95	28
982	95	24
983	95	25
984	95	26
985	94	30
986	94	26
987	95	34
988	95	57
989	95	45
990	94	37
991	95	34
992	95	27
993	95	27
994	95	29
995	98	22
996	94	84
997	94	74
998	95	62
999	94	51
1000	95	50
1001	95	81
1002	94	65
1003	95	49
1004	94	56
1005	95	65
1006	94	59
1007	99	58
1008	98	41
1009	98	27
1010	98	19

Time(s)	Normalized speed (percent)	Normalized torque (percent)
1011	98	13
1012	98	11
1013	98	9
1014	98	8
1015	98	7
1016	98	6
1017	98	6
1018	98	6
1019	71	6
1020	49	5
1021	51	6
1022	51	6
1023	51	6
1024	51	6
1025	51	6
1026	51	6
1027	51	6
1028	51	6
1029	51	6
1030	51	6
1031	51	5
1032	51	6
1033	51	5
1034	51	6
1035	51	6
1036	51	6
1037	51	5
1038	51	5
1039	51	6
1040	51	6
1041	69	59
1042	94	48
1043	95	34
1044	95	29
1045	95	26
1046	94	27
1047	95	31
1048	95	26
1049	95	34
1050	95	29
1051	95	31
1052	95	29
1053	95	35
1054	95	38
1055	94	41
1056	95	28
1057	95	36
1058	94	30
1059	94	26
1060	94	33
1061	95	34
1062	95	27
1063	98	26
1064	98	19
1065	98	13
1066	98	11
1067	98	9
1068	98	7
1069	98	7
1070	98	6
1071	98	6
1072	98	6
1073	98	5
1074	89	6
1075	49	5
1076	51	6
1077	51	6
1078	51	6
1079	51	6
1080	51	6
1081	51	6
1082	51	6
1083	50	6
1084	51	6
1085	51	6
1086	51	6
1087	51	6
1088	51	6
1089	51	6
1090	51	6
1091	56	74
1092	95	56
1093	94	49
1094	95	47
1095	94	43
1096	94	33
1097	95	50
1098	94	40
1099	95	33
1100	95	24
1101	94	22
1102	94	22
1103	94	25
1104	95	27
1105	95	32
1106	94	29
1107	94	26
1108	94	26
1109	94	24
1110	98	52
1111	94	41
1112	99	35
1113	95	58
1114	95	58
1115	98	57
1116	98	38
1117	98	26
1118	93	63
1119	94	59
1120	98	100
1121	94	73
1122	98	53
1123	94	76
1124	95	61
1125	94	49
1126	94	37
1127	97	50
1128	98	36
1129	98	25
1130	98	18
1131	98	12
1132	98	10
1133	98	8
1134	98	7
1135	98	7
1136	98	6
1137	98	6
1138	98	6
1139	80	6
1140	49	6
1141	78	61
1142	95	50
1143	94	43
1144	94	42
1145	94	31
1146	95	30
1147	95	34
1148	95	28
1149	95	27
1150	94	27
1151	95	31
1152	95	42
1153	94	41
1154	95	37
1155	95	43
1156	95	34
1157	95	31
1158	95	27
1159	95	23
1160	95	27
1161	96	38
1162	95	40
1163	95	39
1164	95	26
1165	95	33
1166	94	28
1167	94	34
1168	98	73
1169	95	49
1170	95	51
1171	94	55
1172	95	48
1173	95	35
1174	95	39
1175	95	39
1176	94	41
1177	95	30
1178	95	23
1179	94	19
1180	95	25
1181	94	29
1182	98	27
1183	95	89
1184	95	74
1185	94	60
1186	94	48
1187	94	41
1188	94	29
1189	94	24
1190	95	19
1191	94	21
1192	95	29
1193	95	28
1194	95	27
1195	94	23
1196	95	25
1197	95	26
1198	94	22
1199	95	19
1200	94	17

Appendix II to Part 1048—Large Spark-ignition (SI) Composite Transient Cycle

The following table shows the transient duty-cycle for engines that are not constant-speed engines, as described in § 1048.510:

Time(s)	Normalized speed (percent)	Normalized torque (percent)
0	0	0
1	0	0
2	0	0
3	0	0
4	0	0
5	0	0
6	0	0
7	0	0
8	0	0
9	1	8
10	6	54
11	8	61
12	34	59

Time(s)	Normalized speed (percent)	Normalized torque (percent)
13	22	46
14	5	51
15	18	51
16	31	50
17	30	56
18	31	49
19	25	66
20	58	55
21	43	31
22	16	45
23	24	38
24	24	27
25	30	33
26	45	65
27	50	49
28	23	42
29	13	42
30	9	45
31	23	30
32	37	45
33	44	50
34	49	52
35	55	49
36	61	46
37	66	38
38	42	33
39	17	41
40	17	37
41	7	50
42	20	32
43	5	55
44	30	42
45	44	53
46	45	56
47	41	52
48	24	41
49	15	40
50	11	44
51	32	31
52	38	54
53	38	47
54	9	55
55	10	50
56	33	55
57	48	56
58	49	47
59	33	44
60	52	43
61	55	43
62	59	38
63	44	28
64	24	37
65	12	44
66	9	47
67	12	52
68	34	21
69	29	44
70	44	54
71	54	62
72	62	57
73	72	56
74	88	71
75	100	69
76	100	34
77	100	42
78	100	54
79	100	58
80	100	38
81	83	17
82	61	15
83	43	22
84	24	35
85	16	39
86	15	45
87	32	34
88	14	42
89	8	48
90	5	51
91	10	41
92	12	37
93	4	47
94	3	49
95	3	50
96	4	49
97	4	48
98	8	43
99	2	51
100	5	46
101	8	41
102	4	47
103	3	49
104	6	45
105	3	48
106	10	42
107	18	27
108	3	50
109	11	41
110	34	29
111	51	57
112	67	63
113	61	32
114	44	31
115	48	54
116	69	65
117	85	65
118	81	29
119	74	21
120	62	23
121	76	58
122	96	75
123	100	77
124	100	27
125	100	79
126	100	79
127	100	81
128	100	57
129	99	52
130	81	35
131	69	29
132	47	22
133	34	28
134	27	37
135	83	60
136	100	74
137	100	7
138	100	2
139	70	18
140	23	39
141	5	54
142	11	40
143	11	34
144	11	41
145	19	25
146	16	32
147	20	31
148	21	38
149	21	42
150	9	51
151	4	49
152	2	51
153	1	58
154	21	57
155	29	47
156	33	45
157	16	49
158	38	45
159	37	43
160	35	42
161	39	43
162	51	49
163	59	55
164	65	54
165	76	62
166	84	59
167	83	29
168	67	35
169	84	54
170	90	58
171	93	43
172	90	29
173	66	19
174	52	16
175	49	17
176	56	38
177	73	71
178	86	80
179	96	75
180	89	27
181	66	17
182	50	18
183	36	25
184	36	24
185	38	40
186	40	50
187	27	48
188	19	48
189	23	50
190	19	45
191	6	51
192	24	48
193	49	67
194	47	49
195	22	44
196	25	40
197	38	54
198	43	55
199	40	52
200	14	49
201	11	45
202	7	48
203	26	41
204	41	59
205	53	60
206	44	54
207	22	40
208	24	41
209	32	53
210	44	74
211	57	25
212	22	49
213	29	45
214	19	37
215	14	43
216	36	40
217	43	63
218	42	49
219	15	50
220	19	44
221	47	59
222	67	80
223	76	74
224	87	66
225	98	61
226	100	38
227	97	27
228	100	53

Time(s)	Normalized speed (percent)	Normalized torque (percent)
229	100	72
230	100	49
231	100	4
232	100	13
233	87	15
234	53	26
235	33	27
236	39	19
237	51	33
238	67	54
239	83	60
240	95	52
241	100	50
242	100	36
243	100	25
244	85	16
245	62	16
246	40	26
247	56	39
248	81	75
249	98	86
250	100	76
251	100	51
252	100	78
253	100	83
254	100	100
255	100	66
256	100	85
257	100	72
258	100	45
259	98	58
260	60	30
261	43	32
262	71	36
263	44	32
264	24	38
265	42	17
266	22	51
267	13	53
268	23	45
269	29	50
270	28	42
271	21	55
272	34	57
273	44	47
274	19	46
275	13	44
276	25	36
277	43	51
278	55	73
279	68	72
280	76	63
281	80	45
282	83	40
283	78	26
284	60	20
285	47	19
286	52	25
287	36	30
288	40	26
289	45	34
290	47	35
291	42	28
292	46	38
293	48	44
294	68	61
295	70	47
296	48	28
297	42	22
298	31	29
299	22	35
300	28	28
301	46	46
302	62	69
303	76	81
304	88	85
305	98	81
306	100	74
307	100	13
308	100	11
309	100	17
310	99	3
311	80	7
312	62	11
313	63	11
314	64	16
315	69	43
316	81	67
317	93	74
318	100	72
319	94	27
320	73	15
321	40	33
322	40	52
323	50	50
324	11	53
325	12	45
326	5	50
327	1	55
328	7	55
329	62	60
330	80	28
331	23	37
332	39	58
333	47	24
334	59	51
335	58	68
336	36	52
337	18	42
338	36	52
339	59	73
340	72	85
341	85	92
342	99	90
343	100	72
344	100	18
345	100	76
346	100	64
347	100	87
348	100	97
349	100	84
350	100	100
351	100	91
352	100	83
353	100	93
354	100	100
355	94	43
356	72	10
357	77	3
358	48	2
359	29	5
360	59	19
361	63	5
362	35	2
363	24	3
364	28	2
365	36	16
366	54	23
367	60	10
368	33	1
369	23	0
370	16	0
371	11	0
372	20	0
373	25	2
374	40	3
375	33	4
376	34	5
377	46	7
378	57	10
379	66	11
380	75	14
381	79	11
382	80	16
383	92	21
384	99	16
385	83	2
386	71	2
387	69	4
388	67	4
389	74	16
390	86	25
391	97	28
392	100	15
393	83	2
394	62	4
395	40	6
396	49	10
397	36	5
398	27	4
399	29	3
400	22	2
401	13	3
402	37	36
403	90	26
404	41	2
405	25	2
406	29	2
407	38	7
408	50	13
409	55	10
410	29	3
411	24	7
412	51	16
413	62	15
414	72	35
415	91	74
416	100	73
417	100	8
418	98	11
419	100	59
420	100	98
421	100	99
422	100	75
423	100	95
424	100	100
425	100	97
426	100	90
427	100	86
428	100	82
429	97	43
430	70	16
431	50	20
432	42	33
433	89	64
434	89	77
435	99	95
436	100	41
437	77	12
438	29	37
439	16	41
440	16	38
441	15	36
442	18	44
443	4	55
444	24	26

Time(s)	Normalized speed (percent)	Normalized torque (percent)
445	26	35
446	15	45
447	21	39
448	29	52
449	26	46
450	27	50
451	13	43
452	25	36
453	37	57
454	29	46
455	17	39
456	13	41
457	19	38
458	28	35
459	8	51
460	14	36
461	17	47
462	34	39
463	34	57
464	11	70
465	13	51
466	13	68
467	38	44
468	53	67
469	29	69
470	19	65
471	52	45
472	61	79
473	29	70
474	15	53
475	15	60
476	52	40
477	50	61
478	13	74
479	46	51
480	60	73
481	33	84
482	31	63
483	41	42
484	26	69
485	23	65
486	48	49
487	28	57
488	16	67
489	39	48
490	47	73
491	35	87
492	26	73
493	30	61
494	34	49
495	35	66
496	56	47
497	49	64
498	59	64
499	42	69
500	6	77
501	5	59
502	17	59
503	45	53
504	21	62
505	31	60
506	53	68
507	48	79
508	45	61
509	51	47
510	41	48
511	26	58
512	21	62
513	50	52
514	39	65
515	23	65
516	42	62
517	57	80
518	66	81
519	64	62
520	45	42
521	33	42
522	27	57
523	31	59
524	41	53
525	45	72
526	48	73
527	46	90
528	56	76
529	64	76
530	69	64
531	72	59
532	73	58
533	71	56
534	66	48
535	61	50
536	55	56
537	52	52
538	54	49
539	61	50
540	64	54
541	67	54
542	68	52
543	60	53
544	52	50
545	45	49
546	38	45
547	32	45
548	26	53
549	23	56
550	30	49
551	33	55
552	35	59
553	33	65
554	30	67
555	28	59
556	25	58
557	23	56
558	22	57
559	19	63
560	14	63
561	31	61
562	35	62
563	21	80
564	28	65
565	7	74
566	23	54
567	38	54
568	14	78
569	38	58
570	52	75
571	59	81
572	66	69
573	54	44
574	48	34
575	44	33
576	40	40
577	28	58
578	27	63
579	35	45
580	20	66
581	15	60
582	10	52
583	22	56
584	30	62
585	21	67
586	29	53
587	41	56
588	15	67
589	24	56
590	42	69
591	39	83
592	40	73
593	35	67
594	32	61
595	30	65
596	30	72
597	48	51
598	66	58
599	62	71
600	36	63
601	17	59
602	16	50
603	16	62
604	34	48
605	51	66
606	35	74
607	15	56
608	19	54
609	43	65
610	52	80
611	52	83
612	49	57
613	48	46
614	37	36
615	25	44
616	14	53
617	13	64
618	23	56
619	21	63
620	18	67
621	20	54
622	16	67
623	26	56
624	41	65
625	28	62
626	19	60
627	33	56
628	37	70
629	24	79
630	28	57
631	40	57
632	40	58
633	28	44
634	25	41
635	29	53
636	31	55
637	26	64
638	20	50
639	16	53
640	11	54
641	13	53
642	23	50
643	32	59
644	36	63
645	33	59
646	24	52
647	20	52
648	22	55
649	30	53
650	37	59
651	41	58
652	36	54
653	29	49
654	24	53
655	14	57
656	10	54
657	9	55
658	10	57
659	13	55
660	15	64

Time(s)	Normalized speed (percent)	Normalized torque (percent)
661	31	57
662	19	69
663	14	59
664	33	57
665	41	65
666	39	64
667	39	59
668	39	51
669	28	41
670	19	49
671	27	54
672	37	63
673	32	74
674	16	70
675	12	67
676	13	60
677	17	56
678	15	62
679	25	47
680	27	64
681	14	71
682	5	65
683	6	57
684	6	57
685	15	52
686	22	61
687	14	77
688	12	67
689	12	62
690	14	59
691	15	58
692	18	55
693	22	53
694	19	69
695	14	67
696	9	63
697	8	56
698	17	49
699	25	55
700	14	70
701	12	60
702	22	57
703	27	67
704	29	68
705	34	62
706	35	61
707	28	78
708	11	71
709	4	58
710	5	58
711	10	56
712	20	63
713	13	76
714	11	65
715	9	60
716	7	55
717	8	53
718	10	60
719	28	53
720	12	73
721	4	64
722	4	61
723	4	61
724	10	56
725	8	61
726	20	56
727	32	62
728	33	66
729	34	73
730	31	61
731	33	55
732	33	60
733	31	59
734	29	58
735	31	53
736	33	51
737	33	48
738	27	44
739	21	52
740	13	57
741	12	56
742	10	64
743	22	47
744	15	74
745	8	66
746	34	47
747	18	71
748	9	57
749	11	55
750	12	57
751	10	61
752	16	53
753	12	75
754	6	70
755	12	55
756	24	50
757	28	60
758	28	64
759	23	60
760	20	56
761	26	50
762	28	55
763	18	56
764	15	52
765	11	59
766	16	59
767	34	54
768	16	82
769	15	64
770	36	53
771	45	64
772	41	59
773	34	50
774	27	45
775	22	52
776	18	55
777	26	54
778	39	62
779	37	71
780	32	58
781	24	48
782	14	59
783	7	59
784	7	55
785	18	49
786	40	62
787	44	73
788	41	68
789	35	48
790	29	54
791	22	69
792	46	53
793	59	71
794	69	68
795	75	47
796	62	32
797	48	35
798	27	59
799	13	58
800	14	54
801	21	53
802	23	56
803	23	57
804	23	65
805	13	65
806	9	64
807	27	56
808	26	78
809	40	61
810	35	76
811	28	66
812	23	57
813	16	50
814	11	53
815	9	57
816	9	62
817	27	57
818	42	69
819	47	75
820	53	67
821	61	62
822	63	53
823	60	54
824	56	44
825	49	39
826	39	35
827	30	34
828	33	46
829	44	56
830	50	56
831	44	52
832	38	46
833	33	44
834	29	45
835	24	46
836	18	52
837	9	55
838	10	54
839	20	53
840	27	58
841	29	59
842	30	62
843	30	65
844	27	66
845	32	58
846	40	56
847	41	57
848	18	73
849	15	55
850	18	50
851	17	52
852	20	49
853	16	62
854	4	67
855	2	64
856	7	54
857	10	50
858	9	57
859	5	62
860	12	51
861	14	65
862	9	64
863	31	50
864	30	78
865	21	65
866	14	51
867	10	55
868	6	59
869	7	59
870	19	54
871	23	61
872	24	62
873	34	61
874	51	67
875	60	66
876	58	55

Time(s)	Normalized speed (percent)	Normalized torque (percent)
877	60	52
878	64	55
879	68	51
880	63	54
881	64	50
882	68	58
883	73	47
884	63	40
885	50	38
886	29	61
887	14	61
888	14	53
889	42	6
890	58	6
891	58	6
892	77	39
893	93	56
894	93	44
895	93	37
896	93	31
897	93	25
898	93	26
899	93	27
900	93	25
901	93	21
902	93	22
903	93	24
904	93	23
905	93	27
906	93	34
907	93	32
908	93	26
909	93	31
910	93	34
911	93	31
912	93	33
913	93	36
914	93	37
915	93	34
916	93	30
917	93	32
918	93	35
919	93	35
920	93	32
921	93	28
922	93	23
923	94	18
924	95	18
925	96	17
926	95	13
927	96	10
928	95	9
929	95	7
930	95	7
931	96	7
932	96	6
933	96	6
934	95	6
935	90	6
936	69	43
937	76	62
938	93	47
939	93	39
940	93	35
941	93	34
942	93	36
943	93	39
944	93	34
945	93	26
946	93	23
947	93	24
948	93	24
949	93	22
950	93	19
951	93	17
952	93	19
953	93	22
954	93	24
955	93	23
956	93	20
957	93	20
958	94	19
959	95	19
960	95	17
961	96	13
962	95	10
963	96	9
964	95	7
965	95	7
966	95	7
967	95	6
968	96	6
969	96	6
970	89	6
971	68	6
972	57	6
973	66	32
974	84	52
975	93	46
976	93	42
977	93	36
978	93	28
979	93	23
980	93	19
981	93	16
982	93	15
983	93	16
984	93	15
985	93	14
986	93	15
987	93	16
988	94	15
989	93	32
990	93	45
991	93	43
992	93	37
993	93	29
994	93	23
995	93	20
996	93	18
997	93	16
998	93	17
999	93	16
1000	93	15
1001	93	15
1002	93	15
1003	93	14
1004	93	15
1005	93	15
1006	93	14
1007	93	13
1008	93	14
1009	93	14
1010	93	15
1011	93	16
1012	93	17
1013	93	20
1014	93	22
1015	93	20
1016	93	19
1017	93	20
1018	93	19
1019	93	19
1020	93	20
1021	93	32
1022	93	37
1023	93	28
1024	93	26
1025	93	24
1026	93	22
1027	93	22
1028	93	21
1029	93	20
1030	93	20
1031	93	20
1032	93	20
1033	93	19
1034	93	18
1035	93	20
1036	93	20
1037	93	20
1038	93	20
1039	93	19
1040	93	18
1041	93	18
1042	93	17
1043	93	16
1044	93	16
1045	93	15
1046	93	16
1047	93	18
1048	93	37
1049	93	48
1050	93	38
1051	93	31
1052	93	26
1053	93	21
1054	93	18
1055	93	16
1056	93	17
1057	93	18
1058	93	19
1059	93	21
1060	93	20
1061	93	18
1062	93	17
1063	93	17
1064	93	18
1065	93	18
1066	93	18
1067	93	19
1068	93	18
1069	93	18
1070	93	20
1071	93	23
1072	93	25
1073	93	25
1074	93	24
1075	93	24
1076	93	22
1077	93	22
1078	93	22
1079	93	19
1080	93	16
1081	95	17
1082	95	37
1083	93	43
1084	93	32
1085	93	27
1086	93	26
1087	93	24
1088	93	22
1089	93	22
1090	93	22
1091	93	23
1092	93	22

Time(s)	Normalized speed (percent)	Normalized torque (percent)
1093	93	22
1094	93	23
1095	93	23
1096	93	23
1097	93	22
1098	93	23
1099	93	23
1100	93	23
1101	93	25
1102	93	27
1103	93	26
1104	93	25
1105	93	27
1106	93	27
1107	93	27
1108	93	24
1109	93	20
1110	93	18
1111	93	17
1112	93	17
1113	93	18
1114	93	18
1115	93	18
1116	93	19
1117	93	22
1118	93	22
1119	93	19
1120	93	17
1121	93	17
1122	93	18
1123	93	18
1124	93	19
1125	93	19
1126	93	20
1127	93	19
1128	93	20
1129	93	25
1130	93	30
1131	93	31
1132	93	26
1133	93	21
1134	93	18
1135	93	20
1136	93	25
1137	93	24
1138	93	21
1139	93	21
1140	93	22
1141	93	22
1142	93	28
1143	93	29
1144	93	23
1145	93	21
1146	93	18
1147	93	16
1148	93	16
1149	93	16
1150	93	17
1151	93	17
1152	93	17
1153	93	17
1154	93	23
1155	93	26
1156	93	22
1157	93	18
1158	93	16
1159	93	16
1160	93	17
1161	93	19
1162	93	18
1163	93	16
1164	93	19
1165	93	22
1166	93	25
1167	93	29
1168	93	27
1169	93	22
1170	93	18
1171	93	16
1172	93	19
1173	93	19
1174	93	17
1175	93	17
1176	93	17
1177	93	16
1178	93	16
1179	93	15
1180	93	16
1181	93	15
1182	93	17
1183	93	21
1184	93	30
1185	93	53
1186	93	54
1187	93	38
1188	93	30
1189	93	24
1190	93	20
1191	95	20
1192	96	18
1193	96	15
1194	96	11
1195	95	9
1196	95	8
1197	96	7
1198	94	33
1199	93	46
1200	93	37
1201	16	8
1202	0	0
1203	0	0
1204	0	0
1205	0	0
1206	0	0
1207	0	0
1208	0	0
1209	0	0

PART 1051—CONTROL OF EMISSIONS FROM RECREATIONAL ENGINES AND VEHICLES

Subpart A—Determining How To Follow This Part

Sec.

1051.1 Does this part apply to me?
1051.5 Which engines are excluded or exempted from this part's requirements?
1051.10 What main steps must I take to comply with this part?
1051.15 Do any other regulation parts affect me?
1051.20 May I certify a recreational engine instead of the vehicle?
1051.25 What requirements apply when installing certified engines in recreational vehicles?

Subpart B—Emission Standards and Related Requirements

1051.101 What emission standards and other requirements must my vehicles meet?
1051.103 What are the exhaust emission standards for snowmobiles?
1051.105 What are the exhaust emission standards for off-highway motorcycles?
1051.107 What are the exhaust emission standards for all-terrain vehicles (ATVs) and offroad utility vehicles?
1051.110 What evaporative emission standards must my vehicles meet?
1051.115 What other requirements must my vehicles meet?
1051.120 What warranty requirements apply to me?
1051.125 What maintenance instructions must I give to buyers?
1051.130 What installation instructions must I give to vehicle manufacturers?
1051.135 How must I label and identify the vehicles I produce?
1051.145 What provisions apply only for a limited time?

Subpart C—Certifying Engine Families

1051.201 What are the general requirements for submitting a certification application?
1051.205 What must I include in my application?
1051.210 May I get preliminary approval before I complete my application?
1051.215 What happens after I complete my application?
1051.220 How do I amend the maintenance instructions in my application?
1051.225 How do I amend my application to include new or modified vehicles or to change an FEL?
1051.230 How do I select engine families?
1051.235 What emission testing must I perform for my application for a certificate of conformity?
1051.240 How do I demonstrate that my engine family complies with exhaust emission standards?
1051.245 How do I demonstrate that my engine family complies with evaporative emission standards?
1051.250 What records must I keep and make available to EPA?
1051.255 When may EPA deny, revoke, or void my certificate of conformity?

Subpart D—Testing Production-Line Engines

1051.301 When must I test my production-line vehicles or engines?
1051.305 How must I prepare and test my production-line vehicles or engines?
1051.310 How must I select vehicles or engines for production-line testing?
1051.315 How do I know when my engine family fails the production-line testing requirements?
1051.320 What happens if one of my production-line vehicles or engines fails to meet emission standards?
1051.325 What happens if an engine family fails the production-line requirements?
1051.330 May I sell vehicles from an engine family with a suspended certificate of conformity?
1051.335 How do I ask EPA to reinstate my suspended certificate?
1051.340 When may EPA revoke my certificate under this subpart and how may I sell these vehicles again?

1051.345 What production-line testing records must I send to EPA?
1051.350 What records must I keep?

Subpart E—Testing In-Use Engines [Reserved]

Subpart F—Test Procedures

1051.501 What procedures must I use to test my vehicles or engines?
1051.505 What special provisions apply for testing snowmobiles?
1051.510 What special provisions apply for testing ATV engines? [Reserved]
1051.515 How do I test my fuel tank for permeation emissions?
1051.520 How do I perform exhaust durability testing?

Subpart G—Compliance Provisions

1051.601 What compliance provisions apply to vehicles and engines subject to this part?
1051.605 What are the provisions for exempting vehicles from the requirements of this part if they use engines you have certified under the motor-vehicle program or the Large Spark-ignition program?
1051.610 What are the provisions for producing recreational vehicles with engines already certified under the motor-vehicle program or the Large SI program?
1051.615 What are the special provisions for certifying small recreational engines?
1051.620 When may a manufacturer obtain an exemption for competition recreational vehicles?
1051.625 What special provisions apply to unique snowmobile designs for small-volume manufacturers?
1051.630 What special provisions apply to unique snowmobile designs for all manufacturers?
1051.635 What provisions apply to new manufacturers that are small businesses?

Subpart H—Averaging, Banking, and Trading for Certification

1051.701 General provisions.
1051.705 How do I average emission levels?
1051.710 How do I generate and bank emission credits?
1051.715 How do I trade emission credits?
1051.720 How do I calculate my average emission level or emission credits?
1051.725 What information must I keep?
1051.730 What information must I report?
1051.735 Are there special averaging provisions for snowmobiles?

Subpart I—Definitions and Other Reference Information

1051.801 What definitions apply to this part?
1051.805 What symbols, acronyms, and abbreviations does this part use?
1051.810 What materials does this part reference?
1051.815 How should I request EPA to keep my information confidential?
1051.820 How do I request a hearing?

Authority: 42 U.S.C. 7401–7671(q).

Subpart A—Determining How to Follow This Part

§ 1051.1 Does this part apply to me?

(a) This part applies to you if you manufacture or import any of the following recreational vehicles or engines used in them, unless we exclude them under § 1051.5:

(1) Snowmobiles.

(2) Off-highway motorcycles.

(3) All-terrain vehicles (ATVs).

(4) Offroad utility vehicles with engines with displacement less than or equal to 1000 cc, maximum brake power less than or equal to 30 kW, and maximum vehicle speed of 25 miles per hour or higher. Offroad utility vehicles that are subject to this part are subject to the same requirements as ATVs. This means that any requirement that applies to ATVs also applies to these offroad utility vehicles, without regard to whether the regulatory language mentions offroad utility vehicles.

(b) [Reserved]

(c) As noted in subpart G of this part, 40 CFR part 1068 applies to everyone, including anyone who manufactures, installs, owns, operates, or rebuilds any of the vehicles or engines this part covers.

(d) You need not follow this part for vehicles you produce before the 2006 model year, unless you certify voluntarily. See §§ 1051.103 through 1051.110, § 1051.145, and the definition of ''model year'' in § 1051.801 for more information about the timing of the requirements.

(e) The requirements of this part begin to apply when a vehicle is new. See the definition of ''new'' in § 1051.801 for more information. In some cases, vehicles or engines that have been previously used may be considered ''new'' for the purposes of this part.

(f) See §§ 1051.801 and 1051.805 for definitions and acronyms that apply to this part. The definition section contains significant regulatory provisions and it is very important that you read them.

§ 1051.5 Which engines are excluded or exempted from this part's requirements?

(a) You may exclude vehicles with compression-ignition engines. See 40 CFR part 89 for regulations that cover these engines.

(b) See subpart G of this part and 40 CFR part 1068, subpart C, for exemptions of specific engines.

(c) We may require you to label an engine or vehicle (or both) if this section excludes it and other requirements in this chapter do not apply.

(d) Send the Designated Officer a written request with supporting documentation if you want us to determine whether this part covers or excludes certain vehicles. Excluding engines from this part's requirements does not affect other requirements that may apply to them.

§ 1051.10 What main steps must I take to comply with this part?

(a) You must get a certificate of conformity from us for each engine family before you do any of the following things with a new vehicle or new engine covered by this part: sell, offer for sale, introduce into commerce, distribute or deliver for introduction into commerce, or import it into the United States. ''New'' vehicles or engines may include some already placed in service (see the definition of ''new'' in § 1051.801). You must get a new certificate of conformity for each new model year.

(b) To get a certificate of conformity and comply with its terms, you must do five things:

(1) Meet the emission standards and other requirements in subpart B of this part.

(2) Perform preproduction emission tests.

(3) Apply for certification (see subpart C of this part).

(4) Do routine emission testing on production vehicles or engines as required by subpart D of this part.

(5) Follow our instructions throughout this part.

(c) Subpart F of this part describes how to test your engines or vehicles (including references to other parts) and when you may test the engine alone instead of the entire vehicle.

(d) Subpart G of this part and 40 CFR part 1068 describe requirements and prohibitions that apply to manufacturers, owners, operators, rebuilders, and all others. They also describe exemptions available for special circumstances.

§ 1051.15 Do any other regulation parts affect me?

(a) Parts 86 and 1065 of this chapter describe procedures and equipment specifications for testing vehicles and engines. Subpart F of this part describes how to apply part 86 or 1065 of this chapter to show you meet the emission standards in this part.

(b) Part 1068 of this chapter describes general provisions, including these seven areas:

(1) Prohibited actions and penalties for manufacturers and others.

(2) Rebuilding and other aftermarket changes.

(3) Exemptions and exclusions for certain vehicles and engines.

(4) Importing vehicles and engines.

(5) Selective enforcement audits of your production.

(6) Defect reporting and recall.

(7) Procedures for hearings.

(c) Other parts of this chapter affect you if referenced in this part.

§ 1051.20 May I certify a recreational engine instead of the vehicle?

(a) You may certify engines sold separately from vehicles in either of two cases:

(1) If you manufacture recreational engines but not recreational vehicles, you may ask to certify the engine alone. In your request, explain why you cannot certify the entire vehicle.

(2) If you manufacture complete recreational vehicles containing engines you also sell separately, you may ask to certify all these engines in a single engine family or in separate engine families.

(b) If you certify an engine under this section, you must use the test procedures in subpart F of this part. If the test procedures require vehicle testing, use good engineering judgment to install the engine in an appropriate vehicle for measuring emissions.

(c) If we allow you to certify recreational engines, the vehicles must meet the applicable emission standards (including evaporative emission standards) with the engines installed in the appropriate vehicles. You must prepare installation instructions as described in § 1051.130 and use good engineering judgment so that the engines will meet emission standards after proper installation in the vehicle.

(d) Identify and label engines you produce under this section consistent with the requirements of § 1051.135. On the emission control information label, identify the manufacturing date of the engine rather than the vehicle.

(e) You may not use the provisions of this section to circumvent or reduce the stringency of this part's standards or other requirements.

(f) If you certify under paragraph (a)(1) of this section, you may ask us to allow you to perform production-line testing on the engine. If you certify under paragraph (a)(2) of this section, use good engineering judgment to ensure that these engines are produced in the same manner as the engines you produce for your vehicles, so that your production-line testing results under subpart D of this part would apply to them.

§ 1051.25 What requirements apply when installing certified engines in recreational vehicles?

(a) If you manufacture recreational vehicles with engines certified under § 1051.20, you need not also certify the vehicle under this part. The vehicle must nevertheless meet emission standards with the engine installed.

(b) You must follow the engine manufacturer's emission-related installation instructions, as described in § 1051.135 and 40 CFR 1068.105. For example, you must use a fuel system that meets the permeation requirements of this part, consistent with the engine manufacturer's instructions.

(c) If you install the engine in a way that makes the engine's emission control information label hard to read during normal engine maintenance, you must place a duplicate label on the vehicle, as described in 40 CFR 1068.105.

Subpart B—Emission Standards and Related Requirements

§ 1051.101 What emission standards and other requirements must my vehicles meet?

(a) You must show that your vehicles meet the following:

(1) The applicable exhaust emission standards in § 1051.103, § 1051.105, or § 1051.107.

(i) For snowmobiles, see § 1051.103.

(ii) For off-highway motorcycles, see § 1051.105.

(iii) For all-terrain vehicles and offroad utility vehicles subject to this part, see § 1051.107.

(2) The evaporative emission standards in § 1051.110.

(3) All the requirements in § 1051.115.

(b) The certification regulations in subpart C of this part describe how you make this showing.

(c) These standards and requirements apply to all testing, including production-line and in-use testing, as described in subparts D and E of this part.

(d) Other sections in this subpart describe other requirements for manufacturers such as labeling or warranty requirements.

(e) It is important that you read § 1051.145 to determine if there are other interim requirements or interim compliance options that apply for a limited time.

(f) As is described in § 1051.1(a)(4), offroad utility vehicles that are subject to this part are subject to the same requirements as ATVs.

§ 1051.103 What are the exhaust emission standards for snowmobiles?

(a) Apply the exhaust emission standards in this section by model year. Measure emissions with the snowmobile test procedures in subpart F of this part.

(1) Follow Table 1 of this section for exhaust emission standards. You may use the averaging, banking, and trading provisions of subpart H of this part to show compliance with these standards (an engine family meets emission standards even if its family emission limit is higher than the standard, as long as you show that the whole averaging set of applicable engine families meet the applicable emission standards using emission credits, and the vehicles within the family meet the family emission limit). Table 1 also shows the maximum value you may specify for a family emission limit, as follows:

TABLE 1 OF § 1051.103.—EXHAUST EMISSION STANDARDS FOR SNOWMOBILES (G/KW–HR)

Phase	Model year	Phase-in (percent)	Emission standards			Maximum allowable family emission limits		
			HC	$HC+NO_X$	CO	HC	$HC+NO_X$	CO
Phase 1	2006	50	100		275			
Phase 1	2007–2009	100	100		275			
Phase 2	2010 and 2011	100	75		275			
Phase 3	2012 and later	100	75	(1)	(1)	150	165	400

[1] See § 1051.103(a)(2).

(2) For Phase 3, the HC+NO_X and CO standards are defined by a functional relationship. Choose your corporate average HC+NO_X and CO standards for each model year according to the following criteria:

(i) Prior to production, select the HC+NO_X standard and CO standard (specified as g/kW-hr) so that the combined percent reduction from baseline emission levels is greater than or equal to 100 percent; that is, that the standards comply with the following equation:

$$\left(1-\frac{(HC+NO_x)_{STD}-15}{150}\right)\times 100+\left(1-\frac{CO_{STD}}{400}\right)\times 100 \geq 100$$

(ii) Your corporate average HC+NO_X standard may not be higher than 90 g/kW-hr.

(iii) Your corporate average CO standard may not be higher than 275 g/kW-hr.

(iv) You may use the averaging and banking provisions of subpart H of this part to show compliance with these HC+NO_X and CO standards in this paragraph (a)(2). You may modify your selection of the HC+NO_X and CO standards at the end of the model year under paragraph (a)(2)(i) of this section. You must comply with these final corporate average emission standards.

(b) Apply the exhaust emission standards in this section for snowmobiles using each type of fuel specified in 40 CFR part 1065, subpart C, for which they are designed to operate. You must meet the numerical emission standards for hydrocarbons in this section based on the following types of hydrocarbon emissions for snowmobiles powered by the following fuels:

(1) Gasoline- and LPG-fueled snowmobiles: THC emissions.

(2) Natural gas-fueled snowmobiles: NMHC emissions.

(3) Alcohol-fueled snowmobiles: THCE emissions.

(c) Your snowmobiles must meet emission standards over their full useful life (§ 1051.240 describes how to use deterioration factors to show this). The minimum useful life is 8,000 kilometers, 400 hours of engine operation, or five calendar years, whichever comes first. You must specify a longer useful life in terms of kilometers and hours for the engine family if the average service life of your vehicles is longer than the minimum value, as follows:

(1) Except as allowed by paragraph (c)(2) of this section, your useful life (in kilometers and hours) may not be less than either of the following:

(i) Your projected operating life from advertisements or other marketing materials for any vehicles in the engine family.

(ii) Your basic mechanical warranty for any engines in the engine family.

(2) Your useful life may be based on the average service life of vehicles in the engine family if you show that the average service life is less than the useful life required by paragraph (c)(1) of this section, but more than the minimum useful life (8,000 kilometers or 400 hours of engine operation). In determining the actual average service life of vehicles in an engine family, we will consider all available information and analyses. Survey data is allowed but not required to make this showing.

§ 1051.105 What are the exhaust emission standards for off-highway motorcycles?

(a) Apply the exhaust emission standards in this section by model year. Measure emissions with the off-highway motorcycle test procedures in subpart F of this part.

(1) Follow Table 1 of this section for exhaust emission standards. You may use the averaging, banking, and trading provisions of subpart H of this part to show compliance with the HC+NO_X and/or CO standards (an engine family meets emission standards even if its family emission limit is higher than the standard, as long as you show that the whole averaging set of applicable engine families meet the applicable emission standards using emission credits, and the vehicles within the family meet the family emission limit). The phase-in values specify the percentage of your U.S.-directed production that must comply with the emission standards for those model years. Calculate this compliance percentage based on a simple count of production units within the engine family. Table 1 follows:

TABLE 1 OF § 1051.105.—EXHAUST EMISSION STANDARDS FOR OFF-HIGHWAY MOTORCYCLES (G/KM)

Phase	Model year	Phase-in (percent)	Emission standards		Maximum allowable family emission limits	
			HC+NO_X	CO	HC+NO_X	CO
Phase 1	2006	50	2.0	25	20.0	50
	2007 and later	100	2.0	25	20.0	50

(2) For model years 2007 and later you may choose to certify all of your off-highway motorcycles to an HC+NO_X standard of 4.0 g/km and a CO standard of 35 g/km, instead of the standards listed in paragraph (a)(1) of this section. To certify to the standards in this paragraph (a)(2), you must comply with the following provisions:

(i) You may not request an exemption for any off-highway motorcycles under § 1051.620

(ii) At least ten percent of your off-highway motorcycles for the model year must have four of the following features:

(A) The absence of a headlight or other lights.

(B) The absence of a spark arrestor.

(C) The absence of manufacturer warranty.

(D) Suspension travel greater than 10 inches.

(E) Engine displacement greater than 50 cc.

(F) The absence of a functional seat.

(iii) You may use the averaging and banking provisions of subpart H of this part to show compliance with this HC+NO_X standard, but not this CO standard. If you use the averaging or banking provisions to show compliance, your FEL for HC+NO_X may not exceed 8.0 g/km for any engine family. You may not use the trading provisions of subpart H of this part.

(3) You may certify off-highway motorcycles with engines that have total

displacement of 70 cc or less to the exhaust emission exhaust standards in § 1051.615 instead of certifying them to the exhaust emission standards of this section.

(b) Apply the exhaust emission standards in this section for off-highway motorcycles using each type of fuel specified in 40 CFR part 1068, subpart C, for which they are designed to operate. You must meet the numerical emission standards for hydrocarbons in this section based on the following types of hydrocarbon emissions for off-highway motorcycles powered by the following fuels:

(1) Gasoline- and LPG-fueled off-highway motorcycles: THC emissions.

(2) Natural gas-fueled off-highway motorcycles: NMHC emissions.

(3) Alcohol-fueled off-highway motorcycles: THCE emissions.

(c) Your off-highway motorcycles must meet emission standards over their full useful life (§ 1051.240 describes how to use deterioration factors to show this). The minimum useful life is 10,000 kilometers or five years, whichever comes first. You must specify a longer useful life for the engine family in terms of kilometers if the average service life of your vehicles is longer than the minimum value, as follows:

(1) Except as allowed by paragraph (c)(2) of this section, your useful life (in kilometers) may not be less than either of the following:

(i) Your projected operating life from advertisements or other marketing materials for any vehicles in the engine family.

(ii) Your basic mechanical warranty for any engines in the engine family.

(2) Your useful life may be based on the average service life of vehicles in the engine family if you show that the average service life is less than the useful life required by paragraph (c)(1) of this section, but more than the minimum useful life (10,000 kilometers). In determining the actual average service life of vehicles in an engine family, we will consider all available information and analyses. Survey data is allowed but not required to make this showing.

§ 1051.107 What are the exhaust emission standards for all-terrain vehicles (ATVs) and offroad utility vehicles?

This section specifies the exhaust emission standards that apply to ATVs. As is described in § 1051.1(a)(4), offroad utility vehicles that are subject to this part are subject to these same standards.

(a) Apply the exhaust emission standards in this section by model year. Measure emissions with the ATV test procedures in subpart F of this part.

(1) Follow Table 1 of this section for exhaust emission standards. You may use the averaging, banking, and trading provisions of subpart H of this part to show compliance with these $HC+NO_X$ standards (an engine family meets emission standards even if its family emission limit is higher than the standard, as long as you show that the whole averaging set of applicable engine families meet the applicable emission standards using emission credits, and the vehicles within the family meet the family emission limit). Table 1 also shows the maximum value you may specify for a family emission limit. The phase-in values in the table specify the percentage of your total U.S.-directed production that must comply with the emission standards for those model years. Calculate this compliance percentage based on a simple count of production units within the engine family. This applies to your total production of ATVs and offroad utility vehicles that are subject to the standards of this part; including both ATVs and offroad utility vehicles subject to the standards of this section and ATVs and offroad utility vehicles certified to the standards of other sections in this part 1051 (such as § 1051.615, but not including vehicles certified under other parts in this chapter (such as 40 CFR part 90). Table 1 follows:

TABLE 1 OF § 1051.107.—EXHAUST EMISSION STANDARDS FOR ATVS (G/KM)

Phase	Model year	Phase-in (percent)	Emission standards		Maximum allowable family emission limits	
			$HC+NO_X$	CO	$HC+NO_X$	CO
Phase 1	2006	50	1.5	35	20.0	50
	2007 and later	100	1.5	35	20.0	50

(2) You may certify ATVs with engines that have total displacement of less than 100 cc to the exhaust emission exhaust standards in § 1051.615 instead of certifying them to the exhaust emission standards of this section.

(b) Apply the exhaust emission standards in this section for ATVs using each type of fuel specified in 40 CFR 1065, subpart C for which they are designed to operate. You must meet the numerical emission standards for hydrocarbons in this section based on the following types of hydrocarbon emissions for ATVs powered by the following fuels:

(1) Gasoline- and LPG-fueled ATVs: THC emissions.

(2) Natural gas-fueled ATVs: NMHC emissions.

(3) Alcohol-fueled ATVs: THCE emissions.

(c) Your ATVs must meet emission standards over their full useful life (§ 1051.240 describes how to use deterioration factors to show this). The minimum useful life is 10,000 kilometers, 1000 hours of engine operation, or five years, whichever comes first. You must specify a longer useful life for the engine family in terms of kilometers and hours if the average service life of your vehicles is longer than the minimum value, as follows:

(1) Except as allowed by paragraph (c)(2) of this section, your useful life (in kilometers) may not be less than either of the following:

(i) Your projected operating life from advertisements or other marketing materials for any vehicles in the engine family.

(ii) Your basic mechanical warranty for any engines in the engine family.

(2) Your useful life may be based on the average service life of vehicles in the engine family if you show that the average service life is less than the useful life required by paragraph (c)(1) of this section, but more than the minimum useful life (10,000 kilometers or 1,000 hours of engine operation). In determining the actual average service life of vehicles in an engine family, we will consider all available information and analyses. Survey data is allowed but not required to make this showing.

§ 1051.110 What evaporative emission standards must my vehicles meet?

All of your new vehicles must meet the emission standards of this section over their full useful life, as specified in this section. Note that § 1051.245 allows you to use design-based certification instead of generating new emission data.

(a) Beginning with the 2008 model year, permeation emissions from your vehicle's fuel tank(s) may not exceed 1.5 grams per square-meter per day when measured with the test procedures for tank permeation in subpart F of this part. You may use the averaging, banking, and trading provisions of subpart H of this part to show compliance.

(b) Beginning with the 2008 model year, permeation emissions from your vehicle's fuel lines may not exceed 15 grams per square-meter per day when measured with the test procedures for fuel-line permeation in subpart F of this part. Use the inside diameter of the hose to determine the surface area of the hose.

§ 1051.115 What other requirements must my vehicles meet?

Your vehicles must meet the following requirements:

(a) *Closed crankcase.* Design and produce your vehicles so they release no crankcase emissions into the atmosphere throughout their useful life.

(b) *Emission sampling capability.* Produce all your vehicles to allow sampling of exhaust emissions in the field without damaging the vehicle. Show in your application for certification how this can be done in a way that prevents diluting the exhaust sample with ambient air. To do this, you might simply allow for extending the exhaust pipe by 20 cm; you might also install sample ports in the exhaust (downstream of any aftertreatment devices).

(c) *Adjustable parameters.* If your vehicles have adjustable parameters, they must meet all the requirements of this part for any adjustment in the physically adjustable range. Note that parameters that control the air-fuel ratio may be treated separately under paragraph (d) of this section.

(1) We do not consider an operating parameter adjustable if you permanently seal it or if ordinary tools cannot readily access it.

(2) We may require you to adjust the engine to any specification within the adjustable range during certification testing, production-line testing, selective enforcement auditing, or in-use testing.

(d) *Other adjustments.* This provision applies if an experienced mechanic can change your engine's air-fuel ratio in less than one hour with a few parts whose total cost is under $50 (in 2001 dollars). Examples include carburetor jets and needles. In the case of carburetor jets and needles, your vehicle must meet all the requirements of this part for any air-fuel ratio within the adjustable range described in paragraph (d)(1) of this section.

(1) In your application for certification, specify the adjustable range of air-fuel ratios you expect to occur in use. You may specify it in terms of engine parts (such as the carburetor jet size and needle configuration as a function of atmospheric conditions).

(2) This adjustable range (specified in paragraph (d)(1) of this section) must include all air-fuel ratios between the lean limit and the rich limit, unless you can show that some air-fuel ratios will not occur in use.

(i) The lean limit is the air-fuel ratio that produces the highest engine power output (averaged over the test cycle).

(ii) The rich limit is the richest of the following air-fuel ratios:

(A) The air-fuel ratio that would result from operating the vehicle as you produce it at the specified test conditions. This paragraph (d)(2)(ii)(A) does not apply if you produce the vehicle with an unjetted carburetor so that the vehicle must be jetted by the dealer or operator.

(B) The air-fuel ratio of the engine when you do durability testing.

(C) The richest air-fuel ratio that you recommend to your customers for the applicable ambient conditions.

(3) If the air-fuel ratio of your vehicle is adjusted primarily by changing the carburetor jet size and/or needle configuration, you may submit your recommended jetting chart instead of the range of air-fuel ratios required by paragraph (d)(1) of this section if the following criteria are met:

(i) Good engineering judgment indicates that vehicle operators would not have an incentive to operate the vehicle with richer air-fuel ratios than recommended.

(ii) The chart is based on use of a fuel that is equivalent to the specified test fuel(s). As an alternative you may submit a chart based on a representative in-use fuel if you also provide instructions for converting the chart to be applicable to the test fuel(s).

(iii) The chart is specified in units that are adequate to make it practical for an operator to keep the vehicle properly jetted during typical use. For example, charts that specify jet sizes based on increments of temperature smaller than 20°F (11.1°C) or increments of altitude less than 2000 feet would not meet this criteria. Temperature ranges must overlap by at least 5°F (2.8°C).

(iv) You follow the jetting chart for durability testing.

(v) You do not produce your vehicles with jetting richer than the jetting chart recommendation for the intended vehicle use.

(4) We may require you to adjust the engine to any specification within the adjustable range during certification testing, production-line testing, selective enforcement auditing, or in-use testing. If we allow you to submit your recommended jetting chart instead of the range of air-fuel ratios required by paragraph (d)(1) of this section, adjust the engine to the richest specification within the jetting chart for the test conditions, unless we specify a leaner setting. We may not specify a setting leaner than that described in paragraph (d)(2)(i) of this section.

(e) *Prohibited controls.* You may not design your engines with emission-control devices, systems, or elements of design that cause or contribute to an unreasonable risk to public health, welfare, or safety while operating. For example, this would apply if the engine emits a noxious or toxic substance it would otherwise not emit that contributes to such an unreasonable risk.

(f) *Defeat devices.* You may not equip your vehicles with a defeat device. A defeat device is an auxiliary emission-control device or other control feature that reduces the effectiveness of emission controls under conditions you may reasonably expect the vehicle to encounter during normal operation and use. This does not apply to auxiliary emission-control devices you identify in your certification application if any of the following is true:

(1) The conditions of concern were substantially included in your prescribed duty cycles.

(2) You show your design is necessary to prevent catastrophic vehicle damage or accidents.

(3) The reduced effectiveness applies only to starting the engine.

(g) *Noise standards.* There are no noise standards specified in this part 1051. See 40 CFR Chapter I, Subchapter G, to determine if your vehicle must meet noise emission standards under another part our regulations.

§ 1051.120 What warranty requirements apply to me?

(a) *General requirements.* You must warrant to the ultimate buyer that the new engine meets two conditions:

(1) It is designed, built, and equipped to conform at the time of sale with the requirements of this part.

(2) It is free from defects in materials and workmanship that may keep it from meeting these requirements.

(b) *Warranty period.* Your emission-related warranty must be valid for at least 50 percent of the vehicle's

minimum useful life in kilometers or at least 30 months, whichever comes first. You may offer an emission-related warranty more generous than we require. This warranty may not be shorter than any published or negotiated warranty you offer for the engine or any of its components. If a vehicle has no odometer, base warranty periods in this paragraph (b) only on the vehicle's age (in years).

(c) *Components covered.* The emission-related warranty must cover components whose failure would increase an engine's emissions, including electronic controls, fuel injection (for liquid or gaseous fuels), exhaust-gas recirculation, aftertreatment, or any other system you develop to control emissions. We generally consider replacing or repairing other components to be the owner's responsibility.

(d) *Scheduled maintenance.* You may schedule emission-related maintenance for a component named in paragraph (c) of this section, subject to the restrictions of § 1051.125. You are not required to cover this scheduled maintenance under your warranty if the component meets either of the following criteria:

(1) The component was in general use on similar engines, and was subject to scheduled maintenance, before January 1, 2000.

(2) Failure of the component would clearly degrade the engine's performance enough that the operator would need to repair or replace it.

(e) *Limited applicability.* You may deny warranty claims under this section if the operator caused the problem, as described in 1068.115 of this chapter. You may ask us to allow you to exclude from your emission-related warranty certified vehicles that have been used significantly for competition, especially certified motorcycles that meet at least four of the criteria in § 1051.620(b)(1).

(f) *Aftermarket parts.* As noted in § 1068.101 of this chapter, it is a violation of the Act to manufacture a vehicle part if one of its main effects is to reduce the effectiveness of the vehicle's emission controls. If you make an aftermarket part, you may—but do not have to—certify that using the part will still allow engines to meet emission standards, as described in § 85.2114 of this chapter.

§ 1051.125 What maintenance instructions must I give to buyers?

Give the ultimate buyer of each new vehicle written instructions for properly maintaining and using the vehicle, including the emission-control system. The maintenance instructions also apply to service accumulation on your test vehicles or engines, as described in 40 CFR part 1065, subpart E.

(a) *Critical emission-related maintenance.* Critical emission-related maintenance includes any adjustment, cleaning, repair, or replacement of air-induction, fuel-system, or ignition components, aftertreatment devices, pulse-air valves, exhaust gas recirculation systems, crankcase ventilation valves, sensors, or electronic control units. This may also include any other component whose only purpose is to reduce emissions or whose failure will increase emissions without significantly degrading engine performance. You may schedule critical emission-related maintenance on these components if you meet the following conditions:

(1) You may ask us to approve critical emission-related maintenance only if it meets two criteria:

(i) Operators are reasonably likely to do the maintenance you call for.

(ii) Vehicles need the maintenance to meet emission standards.

(2) We will accept scheduled maintenance as reasonably likely to occur in use if you satisfy any of four conditions:

(i) You present data showing that, if a lack of maintenance increases emissions, it also unacceptably degrades the vehicle's performance.

(ii) You present survey data showing that 80 percent of vehicles in the field get the maintenance you specify at the recommended intervals.

(iii) You provide the maintenance free of charge and clearly say so in maintenance instructions for the customer.

(iv) You otherwise show us that the maintenance is reasonably likely to be done at the recommended intervals.

(3) You may not schedule critical emission-related maintenance within the minimum useful life period for aftertreatment devices, pulse-air valves, fuel injectors, oxygen sensors, electronic control units, superchargers, or turbochargers.

(b) *Recommended additional maintenance.* You may recommend, but not require, any additional amount of maintenance on the components listed in paragraph (a) of this section. However, you must make it clear that these maintenance steps are not necessary to keep the emission-related warranty valid. If operators do the maintenance specified in paragraph (a) of this section, but not the recommended additional maintenance, this does not allow you to disqualify them from in-use testing or deny a warranty claim.

(c) *Special maintenance.* You may specify more frequent maintenance to address problems related to special situations such as substandard fuel or atypical engine operation. You may not perform this special maintenance during service accumulation or durability testing.

(d) *Noncritical emission-related maintenance.* For engine parts not listed in paragraph (a) of this section, you may schedule any amount of emission-related inspection or maintenance. But you must state clearly that these steps are not necessary to keep the emission-related warranty valid. Also, do not take these inspection or maintenance steps during service accumulation on your test vehicles or engines.

(e) *Maintenance that is not emission-related.* For maintenance unrelated to emission controls, you may schedule any amount of inspection or maintenance. You may also take these inspection or maintenance steps during service accumulation on your test vehicles or engines. This might include adding engine oil or adjusting chain tension, clutch position, or tire pressure.

(f) *Source of parts and repairs.* Print clearly on the first page of your written maintenance instructions that any repair shop or person may maintain, replace, or repair emission-control devices and systems. Your instructions may not require any component or service identified by brand, trade, or corporate name. Also, do not directly or indirectly condition your warranty on a requirement that the vehicle be serviced by your franchised dealers or any other service establishments with which you have a commercial relationship. You may disregard the requirements in this paragraph (f) if you do one of two things:

(1) Provide a component or service without charge under the purchase agreement.

(2) Get us to waive this prohibition in the public's interest by convincing us the vehicle will work properly only with the identified component or service.

§ 1051.130 What installation instructions must I give to vehicle manufacturers?

(a) If you sell an engine for someone else to install in a recreational vehicle, give the engine buyer written instructions for installing it consistent with the requirements of this part. Include all information necessary to ensure that engines installed this way will meet emission standards.

(b) These instructions must have the following information:

(1) Include the heading: ''Emission-related installation instructions''.

(2) State: ''Failing to follow these instructions when installing a certified engine in a recreational vehicle may violate federal law (40 CFR 1068.105(b)), and subject you to fines or other penalties as described in the Clean Air Act.''.

(3) Describe any other instructions needed to install an exhaust aftertreatment device consistent with your application for certification.

(4) Describe the steps needed to comply with the evaporative emission standards in § 1051.110.

(5) Describe any limits on the range of applications needed to ensure that the engine operates consistently with your application for certification. For example, if your engines are certified only to the snowmobile standards, tell vehicle manufacturers not to install the engines in other vehicles.

(6) Describe any other instructions to make sure the installed engine will operate according to any design specifications you describe in your application for certification.

(7) State: ''If you install the engine in a way that makes the engine's emission control information label hard to read during normal engine maintenance, you must place a duplicate label on the vehicle, as described in 40 CFR 1068.105.''.

(c) You do not need installation instructions for engines you install in your own vehicles.

§ 1051.135 How must I label and identify the vehicles I produce?

Each of your vehicles must have three labels: a vehicle identification number as described in paragraph (a) of this section, an emission control information label as described in paragraphs (b) through (e) of this section, and a consumer information label as described in paragraph (g) of this section.

(a) Assign each production vehicle a unique identification number and permanently and legibly affix, stamp, or engrave it on the vehicle.

(b) At the time of manufacture, add a permanent label identifying the emission controls for each vehicle. This is the vehicle's ''emission control information label.'' To meet labeling requirements, do the following things:

(1) Attach the label in one piece so it is not removable without being destroyed or defaced.

(2) Design and produce it to be durable and readable for the vehicle's entire life.

(3) Secure it to a part of the vehicle (or engine) needed for normal operation and not normally requiring replacement.

(4) Write it in block letters in English.

(5) Attach the label in a location where it can be easily read.

(c) On your label, do these things:

(1) Include the heading ''EMISSION CONTROL INFORMATION''.

(2) Include your full corporate name and trademark.

(3) State: ''THIS VEHICLE IS CERTIFIED TO OPERATE ON [specify operating fuel or fuels].''.

(4) Identify the emission-control system; your identifiers must use names and abbreviations consistent with SAE J1930 (incorporated by reference in § 1051.810).

(5) List all requirements for fuel and lubricants.

(6) State the date of manufacture [DAY (optional), MONTH, and YEAR]; if you stamp it on the engine and print it in the owner's manual, you may omit this information from the emission control information label.

(7) State: ''THIS VEHICLE MEETS U.S. ENVIRONMENTAL PROTECTION AGENCY REGULATIONS FOR [MODEL YEAR] [SNOWMOBILES or OFF-ROAD MOTORCYCLES or ATVs].''.

(8) Include EPA's standardized designation for the engine family.

(9) State the engine's displacement (in liters) and maximum brake power. You do not need to include the engine's displacement and power on the emission control information label if the vehicle is permanently labeled with a unique model name that corresponds to a specific displacement/power configuration.

(10) State the engine's useful life if it is different than the minimum value.

(11) List specifications and adjustments for engine tuneups; show the proper position for the transmission during tuneup and state which accessories should be operating.

(12) Identify the emission standards or family emission limits to which you have certified the engine.

(d) Some of your engines may need more information on the emission control information label. If you produce an engine or vehicle that we exempt from the requirements of this part, see subpart G of this part and 40 CFR part 1068, subparts C and D, for more label information.

(e) Some engines may not have enough space for an emission control information label with all the required information. In this case, you may omit the information required in paragraphs (c)(3), (c)(4), and (c)(5) of this section if you print it in the owner's manual instead.

(f) If you are unable to meet these labeling requirements, you may ask us to modify them consistent with the intent of this section.

(g) Label every vehicle certified under this part with a removable hang-tag showing its emission characteristics relative to other models. The label should be attached securely to the vehicle before it is offered for sale in such a manner that it would not be accidentally removed prior to sale. Use the applicable equations of this paragraph (g) to determine the normalized emission rate (NER) from the FEL for your vehicle. If the vehicle is certified without using the averaging provisions of subpart H, use the final deteriorated emission level. Round the resulting normalized emission rate for your vehicle to the nearest whole number. We may specify a standardized format for labels. At a minimum, the tag should include: The manufacturer's name, vehicle model name, engine description (500 cc two-stroke with DFI), the NER, and a brief explanation of the scale (for example, note that 0 is the cleanest and 10 is the least clean).

(1) For snowmobiles, use the following equation:

$$NER = 16.61 \times \log(2.667 \times HC + CO) - 38.22$$

Where:

HC and CO are the cycle-weighted FELs (or emission rates) for hydrocarbons and carbon monoxide in g/kW–hr.

(2)(i) For off-highway motorcycles with $HC+NO_X$ emissions less than or equal to 2.0 g/km, use the following equation:

$$(NER = 2.500 \times (HC + NO_X)$$

Where:

$HC + NO_X$ is the FEL (or the sum of the cycle-weighted emission rates) for hydrocarbons and oxides of nitrogen in g/km.

(ii) For off-highway motorcycles with $HC+NO_X$ emissions greater than 2.0 g/km, use the following equation:

$$NER = 5.000 \times \log(HC + NO_X) + 3.495$$

Where:

$HC + NO_X$ is the FEL (or the sum of the cycle-weighted emission rates) for hydrocarbons and oxides of nitrogen in g/km.

(3)(i) For ATVs with $HC+NO_X$ emissions less than or equal to 1.5 g/km, use the following equation:

$$NER = 3.333 \times (HC + NO_X)$$

Where:

$HC + NO_X$ is the FEL (or the sum of the cycle-weighted emission rates) for hydrocarbons and oxides of nitrogen in g/km.

(ii) For ATVs with $HC+NO_X$ emissions greater than 1.5 g/km, use the following equation:

$$NER = 4.444 \times \log(HC + NO_X) + 4.217$$

Where:

$HC + NO_X$ is the FEL (or the sum of the cycle-weighted emission rates) for hydrocarbons and oxides of nitrogen in g/km.

§ 1051.145 What provisions apply only for a limited time?

Apply the following provisions instead of others in this part for the periods and circumstances specified in this section.

(a) *Provisions for small-volume manufacturers.* Special provisions apply to you if you are a small-volume manufacturer subject to the requirements of this part. Contact us before 2006 if you intend to use these provisions.

(1) You may delay complying with otherwise applicable emission standards (and other requirements) for two model years.

(2) If you are a small-volume manufacturer of snowmobiles, only 50 percent of the models you produce (instead of all of the models you produce) must meet emission standards in the first two years they apply to you as a small-volume manufacturer, as described in paragraph (a)(1) of this section. For example, this alternate phase-in allowance would allow small-volume snowmobile manufacturers to comply with the Phase 1 exhaust standards by certifying 50 percent of their snowmobiles in 2008, 50 percent of their snowmobiles in 2009, and 100 percent in 2010.

(3) Your vehicles for model years before 2011 may be exempt from the exhaust standards of this part if you meet the following criteria:

(i) Produce your vehicles by installing engines covered by a valid certificate of conformity under 40 CFR part 90 that shows the engines meet standards for Class II engines for each engine's model year.

(ii) Do not change the engine in a way that we could reasonably expect to increase its exhaust emissions.

(iii) The engine meets all applicable requirements from 40 CFR part 90. This applies to engine manufacturers, vehicle manufacturers who use these engines, and all other persons as if these engines were not used in recreational vehicles.

(iv) Demonstrate that fewer than 50 percent of the engine model's total sales, from all companies, are used in recreational vehicles regulated under this part.

(4) All vehicles certified or exempted under this paragraph (a) must be labeled according to our specifications. The label must include the following:

(i) The heading ''EMISSION CONTROL INFORMATION''.

(ii) Your full corporate name and trademark.

(iii) A description of the provisions under which the vehicle is either exempted or certified.

(iv) Other information that we specify to you in writing.

(b) *Optional emission standards for ATVs.* To meet ATV standards for model years before 2009, you may apply the exhaust emission standards by model year in paragraph (b)(1) of this section while measuring emissions using the engine-based test procedures in 40 CFR part 1065 instead of the chassis-based test procedures in 40 CFR part 86.

(1) Follow Table 1 of this section for exhaust emission standards, while meeting all the other requirements of § 1051.107. You may use emission credits to show compliance with these standards (see subpart H of this part). You may not exchange emission credits with engine families meeting the standards in § 1051.107(a). You may also not exchange credits between engine families certified to the standards for engines above 225 cc and engine families certified to the standards for engines below 225 cc. The phase-in percentages in the table specify the percentage of your U.S.-directed production that must comply with the emission standards for those model years. Table 1 follows:

TABLE 1 OF § 1051.145.—OPTIONAL EXHAUST EMISSION STANDARDS FOR ATVS (G/KW–HR)

Engine displacement	Model year	Phase-in (percent)	Emission standards		Maximum allowable family emission limits
			$HC+NO_X$	CO	$HC+NO_X$
<225 cc	2006	50	16.1	400	32.2
	2007 and 2008	100	16.1	400	32.2
≥225 cc	2006	50	13.4	400	26.8
	2007 and 2008	100	13.4	400	26.8

(2) Measure emissions by testing the engine on a dynamometer with the steady-state duty cycle described in Table 2 of this section.

(i) During idle mode, hold the speed within your specifications, keep the throttle fully closed, and keep engine torque under 5 percent of the peak torque value at maximum test speed.

(ii) For the full-load operating mode, operate the engine at its maximum fueling rate.

(iii) See part 1065 of this chapter for detailed specifications of tolerances and calculations.

(iv) Table 2 follows:

TABLE 2 OF § 1051.145.—6-MODE DUTY CYCLE FOR RECREATIONAL ENGINES

Mode No.	Engine speed (percent of maximum test speed)	Torque (percent of maximum test torque at test speed)	Minimum time in mode (minutes)	Weighting factors
1	85	100	5.0	0.09
2	85	75	5.0	0.20

TABLE 2 OF § 1051.145.—6-MODE DUTY CYCLE FOR RECREATIONAL ENGINES—Continued

Mode No.	Engine speed (percent of maximum test speed)	Torque (percent of maximum test torque at test speed)	Minimum time in mode (minutes)	Weighting factors
3	85	50	5.0	0.29
4	85	25	5.0	0.30
5	85	10	5.0	0.07
6	Idle	0	5.0	0.05

(3) For ATVs certified to the standards in this paragraph (b) use the following equation to determine the normalized emission rate required by § 1051.135(g):

$$NER = 9.898 \times \log(HC + NO_X - 4.898$$

Where:

$HC + NO_X$ is the sum of the cycle-weighted emission rates for hydrocarbons and oxides of nitrogen in g/kW–hr.

(c) *Production-line testing.* Vehicles certified to the Phase 1 or Phase 2 standards in § 1051.103, or the Phase 1 standards in §§ 1051.105 or 1051.107 are exempt from the production-line testing requirements of subpart D of this part if they are certified without participating in the emission averaging, banking and trading program described in Subpart H of this part.

(d) *Phase-in flexibility.* For model years before 2014, if you make a good faith effort to comply, but fail to meet the sales requirements of this part during a phase-in period for new standards, or fail to meet the average emission standards, we may approve an alternative remedy to offset the emission reduction deficit using future emission credits under this part. To apply for this, you must:

(1) Submit a plan during the certification process for the first model year of the phase-in showing how you project to meet the sales requirement of the phase-in.

(2) Notify us less than 30 days after you determine that you are likely to fail to comply with the sales requirement of the phase-in.

(3) Propose a remedy that will achieve equivalent or greater emission reductions compared to the specified phase-in requirements, and that will offset the deficit within one model year.

(e) *Snowmobile testing.* You may use the raw sampling procedures described in 40 CFR part 91, subparts D and E, for emission testing of snowmobiles for model years prior to 2010. For later model years, you may use these procedures if you show that they produce emission measurements equivalent to the otherwise specified test procedures.

(f) *Early credits.* Snowmobile manufacturers may generate early emission credits in one of the following ways, by certifying some or all of their snowmobiles prior to 2006. Credit generating snowmobiles must meet all other applicable requirements of this part. No early credits may be generated by off-highway motorcycles or ATVs.

(1) You may certify one or more snowmobile engine families to FELs (HC and CO) below the numerical level of the Phase 2 standards prior to the date when compliance with the Phase 1 standard is otherwise required. Credits are calculated relative to the Phase 2 standards. Credits generated under this paragraph (f)(1) may be used at any time before 2012.

(2) You may certify a snowmobile engine family to FELs (HC and CO) below the numerical level of the Phase 1 standards prior to the date when compliance with the Phase 1 standard is otherwise required. Credits are calculated relative to the Phase 1 standards. Credits generated under this paragraph (f)(2) may only be used for compliance with the Phase 1 standards. You may generate credits under this paragraph (f)(2) without regard to whether the FELs are above or below the numerical level of the Phase 2 standards.

(g) *Pull-ahead option for permeation emissions.* Manufacturers choosing to comply with an early tank permeation standard of 3.0 g/m²/day prior to model year 2008 may be allowed to delay compliance with the 1.5 g/m²/day standard, for an equivalent number of tanks, subject to the following provisions:

(1) Pull-ahead tanks meeting the 3.0 g/m²/day standard must be certified and must meet all applicable requirements other than those limited to compliance with the exhaust standards.

(2) Tanks for which compliance with the 1.5 g/m²/day standard is delayed must meet the 3.0 g/m²/day standard.

(3) You may delay compliance with the 1.5 g/m²/day standard for one tank for one year for each tank-year of credit generated early.

(4) You may not use credits for a tank that is larger than the tank from which you generated the credits.

Subpart C—Certifying Engine Families

§ 1051.201 What are the general requirements for submitting a certification application?

(a) Send us an application for a certificate of conformity for each engine family. Each application is valid for only one model year.

(b) The application must not include false or incomplete statements or information (see § 1051.255).

(c) We may choose to ask you to send us less information than we specify in this subpart, but this would not change your recordkeeping requirements.

(d) Use good engineering judgment for all decisions related to your application (see § 1068.5 of this chapter).

(e) An authorized representative of your company must approve and sign the application.

§ 1051.205 What must I include in my application?

In your application, do all the following things unless we ask you to send us less information:

(a) Describe the engine family's specifications and other basic parameters of the vehicle design. List the types of fuel you intend to use to certify the engine family (for example, gasoline, liquefied petroleum gas, methanol, or natural gas). List vehicle configurations and model names that are included in the engine family.

(b) Explain how the emission-control systems operate.

(1) Describe in detail all the system components for controlling exhaust emissions, including auxiliary emission-control devices and all fuel-system components you will install on any production or test vehicle or engine. Explain why any auxiliary emission-control devices are not defeat devices (see § 1051.115(f)). Do not include

detailed calibrations for components unless we ask for them.

(2) Describe the evaporative emission controls.

(c) Describe the vehicles or engines you selected for testing and the reasons for selecting them.

(d) Describe any special or alternate test procedures you used (see § 1051.501).

(e) Describe how you operated the engine or vehicle prior to testing, including the duty cycle and the number of engine operating hours used to stabilize emission levels, and any scheduled maintenance you performed.

(f) List the specifications of the test fuels to show that they fall within the required ranges.

(g) Identify the engine family's useful life.

(h) Propose maintenance and use instructions for the ultimate buyer of each new vehicle (see § 1051.125).

(i) Propose emission-related installation instructions if you sell engines for someone else to install in a vehicle (see § 1051.130).

(j) Propose an emission control information label.

(k) Present emission data to show that you meet emission standards.

(1) Present exhaust emission data for HC, NO_X (as applicable), and CO on a test vehicle or engine to show your vehicles meet the emission standards we specify in subpart B of this part. Show these figures before and after applying deterioration factors for each vehicle or engine. Include test data for each type of fuel from part 1065, subpart C, of this chapter on which you intend for vehicles in the engine family to operate (for example, gasoline, liquefied petroleum gas, methanol, or natural gas). If we specify more than one grade of any fuel type (for example, a summer grade and winter grade of gasoline), you only need to submit test data for one grade, unless the regulations of this part explicitly specify otherwise for your vehicle.

(2) Present evaporative test data for HC to show your vehicles meet the evaporative emission standards we specify in subpart B of this part. Show these figures before and after applying deterioration factors for each vehicle or engine, where applicable. If you did not perform the testing, identify the source of the test data.

(3) Note that § 1051.235 and 1051.245 allows you to submit an application in certain cases without new emission data.

(l) Report all test results, including those from invalid tests or from any nonstandard tests (such as measurements based on exhaust concentrations in parts per million).

(m) Identify the engine family's deterioration factors and describe how you developed them. Present any emission test data you used for this.

(n) Describe all adjustable operating parameters and other adjustments (see § 1051.115 (c) and (d)), including the following:

(1) The nominal or recommended setting.

(2) The intended physically adjustable range, including production tolerances if they affect the range.

(3) The limits or stops used to establish adjustable ranges.

(4) The air-fuel ratios or jet chart specified in § 1051.115(d).

(o) State that you operated your test vehicles or engines according to the specified procedures and test parameters using the fuels described in the application to show you meet the requirements of this part.

(p) State unconditionally that all the vehicles (and/or engines) in the engine family comply with the requirements of this part, other referenced parts, and the Clean Air Act.

(q) Include estimates of U.S.-directed production volumes.

(r) Show us how to modify your production vehicles to measure emissions in the field (see § 1051.115).

(s) Add other information to help us evaluate your application if we ask for it.

§ 1051.210 May I get preliminary approval before I complete my application?

If you send us information before you finish the application, we will review it and make any appropriate determinations listed in § 1051.215(b)(1) through (5). Decisions made under this section are considered to be preliminary approval. We will generally not disapprove applications under § 1051.215(b)(1) through (5) where we have given you preliminary approval, unless we find new and substantial information supporting a different decision.

(a) If you request preliminary approval related to the upcoming model year or the model year after that, we will make a ''best-efforts'' attempt to make the appropriate determinations as soon as possible. We will generally not provide preliminary approval related to a future model year more than two years ahead of time.

(b) If we have published general guidance that serves as our determination for your situation, you may consider that to be preliminary approval.

§ 1051.215 What happens after I complete my application?

(a) If any of the information in your application changes after you submit it, amend it as described in § 1051.225.

(b) We may deny your application (that is, determine that we cannot approve it without revision) if the engine family does not meet the requirements of this part or the Act. For example:

(1) If you inappropriately use the provisions of § 1051.230(c) or (d) to define a broader or narrower engine family, we will require you to redefine your engine family.

(2) If we determine you did not appropriately select the useful life as specified in § 1051.103(c), § 1051.105(c), or § 1051.107(c), we will require you to lengthen it.

(3) If we determine you did not appropriately select deterioration factors under § 1051.240(c), we will require you to revise them.

(4) If your proposed emission control information label is inconsistent with § 1051.135, we will require you to change it (and tell you how, if possible).

(5) If you require or recommend maintenance and use instructions inconsistent with § 1051.125, we will require you to change them.

(6) If we find any other problem with your application, we will tell you what the problem is, and what needs to be corrected.

(c) If we determine your application is complete and shows that the engine family meets all the requirements of this part and the Act, we will issue a certificate of conformity for your engine family for that model year. If we deny the application, we will explain why in writing. You may then ask us to hold a hearing to reconsider our decision (see § 1051.820).

§ 1051.220 How do I amend the maintenance instructions in my application?

Send the Designated Officer a request to amend your application for certification for an engine family if you want to change the emission-related maintenance instructions in a way that could affect emissions. In your request, describe the proposed changes to the maintenance instructions.

(a) If you are decreasing the specified level of maintenance, you may distribute the new maintenance instructions to your customers 30 days after we receive your request, unless we disapprove your request. We may approve a shorter time or waive this requirement.

(b) If your requested change would not decrease the specified level of

maintenance, you may distribute the new maintenance instructions anytime after you send your request.

(c) If you are correcting or clarifying your maintenance instructions or if you are changing instructions for maintenance unrelated to emission controls, the requirements of this section do not apply.

§ 1051.225 How do I amend my application to include new or modified vehicles or to change an FEL?

(a) You must amend your application for certification before you take either of the following actions:

(1) Add a vehicle to a certificate of conformity.

(2) Make a design change for a certified engine family that may affect emissions or an emission-related part over the vehicle's lifetime.

(3) Modify an FEL for an engine family, as described in paragraph (f) of this section.

(b) Send the Designated Officer a request to amend the application for certification for an engine family. In your request, do all of the following:

(1) Describe the vehicle model or configuration you are adding or changing.

(2) Include engineering evaluations or reasons why the original test vehicle or engine is or is not still appropriate.

(3) If the original test vehicle or engine for the engine family is not appropriate to show compliance for the new or modified vehicle, include new test data showing that the new or modified vehicle meets the requirements of this part.

(c) You may start producing the new or modified vehicle anytime after the time at which you send us your request (for example, the day you mail your request). If we determine that the affected vehicles do not meet applicable requirements, we will require you to cease production of the vehicles and to recall and correct the vehicles at no expense to the owner. If you choose to produce vehicles under this paragraph, we will consider that to be consent to recall all vehicles that we determine do not meet applicable standards and other requirements and to remedy the nonconformity at no expense to the owner.

(d) You must give us test data within 30 days if we ask for more testing, or stop producing the vehicle if you are not able to do this. You may give us an engineering evaluation instead of test data if we agree that you can address our questions without test data.

(e) If we determine that the certificate of conformity would not cover your new or modified vehicle, we will send you a written explanation of our decision. In this case, you may no longer produce these vehicles, though you may ask for a hearing for us to reconsider our decision (see § 1051.820).

(f) You may ask to change your FEL in the following cases:

(1) You may ask to raise your FEL for your engine family after the start of production. You must use the higher FEL for the entire family to calculate your average emission level under subpart H of this part. In your request, you must demonstrate that you will still be able to comply with the applicable average emission standards as specified in subparts B and H of this part.

(2) You may ask to lower the FEL for your engine family after the start of production only when you have test data from production vehicles indicating that your vehicles comply with the lower FEL. You may create a separate subfamily with the lower FEL. Otherwise, you must use the higher FEL for the family to calculate your average emission level under subpart H of this part.

(3) If you change the FEL during production, you must include the new FEL on the emission control information label for all vehicles produced after the change.

§ 1051.230 How do I select engine families?

(a) Divide your product line into families of vehicles that you expect to have similar emission characteristics. Your engine family is limited to a single model year.

(b) Group vehicles in the same engine family if they are the same in all of the following aspects:

(1) The combustion cycle.

(2) The cooling system (water-cooled vs. air-cooled).

(3) Configuration of the fuel system (for example, port fuel injection vs. carburetion).

(4) Method of air aspiration.

(5) The number, location, volume, and composition of catalytic converters.

(6) Type of fuel.

(7) The number, arrangement, and approximate bore diameter of cylinders.

(8) Evaporative emission controls.

(c) In some cases you may subdivide a group of vehicles that is identical under paragraph (b) of this section into different engine families. To do this under normal circumstances, you must show you expect emission characteristics to be different during the useful life or that any of the following engine characteristics are different:

(1) Method of actuating intake and exhaust timing (poppet valve, reed valve, rotary valve, etc.).

(2) Location or size of intake and exhaust valves or ports.

(3) Configuration of the combustion chamber.

(4) Cylinder stroke or actual bore diameter.

(5) Exhaust system.

(d) In some cases, you may include different engines in the same engine family, even though they are not identical with respect to the things listed in paragraph (b) of this section.

(1) If different engines have similar emission characteristics during the useful life, we may approve grouping them in the same engine family.

(2) If you are a small-volume manufacturer, you may group engines from any vehicles subject to the same emission standards into a single engine family. This does not change any of the requirements of this part for showing that an engine family meets emission standards.

(e) If you cannot appropriately define engine families by the method in this section, we will define them based on features related to emission characteristics.

(f) You may ask us to create separate families for exhaust emissions and evaporative emissions. If we do this, list both families on the emission control information label.

§ 1051.235 What emission testing must I perform for my application for a certificate of conformity?

This section describes the emission testing you must perform to show compliance with the emission standards in subpart B of this part during certification.

(a) Test your emission-data vehicles using the procedures and equipment specified in subpart F of this part. Where specifically required or allowed, test the engine instead of the vehicle. For evaporative emissions, test the fuel system components separate from the vehicle.

(b) Select from each engine family a test vehicle or engine, and a fuel system for each fuel type with a configuration that is most likely to exceed the emission standards, using good engineering judgment, consider the emission levels of all exhaust constituents over the full useful life of the vehicle.

(c) You may use previously generated emission data in the following cases:

(1) You may submit emission data for equivalent engine families from previous years instead of doing new tests, but only if the data show that the test vehicle or engine would meet all the requirements for the latest vehicle or engine models. We may require you to

do new emission testing if we believe the latest vehicle or engine models could be substantially different from the previously tested vehicle or engine.

(2) You may submit emission data for equivalent engine families performed to show compliance with other standards (such as California standards) instead of doing new tests, but only if the data show that the test vehicle or engine would meet all of this part's requirements.

(3) You may submit evaporative emission data measured by a fuel system supplier. We may require you to verify that the testing was conducted in accordance with the applicable regulations.

(d) We may choose to measure emissions from any of your test vehicles or engines (or other vehicles or engines in the engine family).

(1) If we do this, you must provide the test vehicle or engine at the location we select. We may decide to do the testing at your plant or any other facility. If we choose to do the testing at your plant, you must schedule it as soon as possible and make available the instruments and equipment we need.

(2) If we measure emissions on one of your test vehicles or engines, the results of that testing become the official data for the vehicle or engine. Unless we later invalidate this data, we may decide not to consider your data in determining if your engine family meets the emission standards.

(3) Before we test one of your vehicles or engines, we may set its adjustable parameters to any point within the physically adjustable ranges (see § 1051.115(c)). We may also adjust the air-fuel ratio within the adjustable range specified in § 1051.115(d).

(4) Calibrate the test vehicle or engine within normal production tolerances for anything not covered by § 1051.115(c) and (d) of this section.

(e) If you are a small-volume manufacturer, you may certify by design on the basis of preexisting exhaust emission data for similar technologies and other relevant information, and in accordance with good engineering judgment. In those cases, you are not required to test your vehicles.

This is called ''design-certification'' or ''certifying by design.'' To certify by design, you must show that the technology used on your engines is sufficiently similar to the previously tested technology that a person reasonably familiar with emission-control technology would believe that your engines will comply with the emission standards.

(f) For fuel tanks that are certified based on permeability treatments for plastic fuel tanks, you do not need to test each engine family. However, you must use good engineering judgment to determine permeation rates for the tanks. This requires that more than one fuel tank be tested for each set of treatment conditions. You may not use test data from a given tank for any other tanks that have thinner walls. You may, however, use test data from a given tank for other tanks that have thicker walls. This applies to both low-hour (*i.e.*, baseline testing) and durability testing. Note that § 1051.245 allows you to use design-based certification instead of generating new emission data.

§ 1051.240 How do I demonstrate that my engine family complies with exhaust emission standards?

(a) For certification, your engine family is considered to be in compliance with the numerical exhaust emission standards in subpart B of this part if all emission-data vehicles representing that family have test results showing emission levels at or below the standards.

(b) Your engine family does not comply if any emission-data vehicle representing that family has test results showing emission levels above the standards for any pollutant.

(c) To compare emission levels from the emission-data vehicle with the emission standards, apply deterioration factors (to three significant figures) to the measured emission levels. The deterioration factor is a number that shows the relationship between exhaust emissions at the end of useful life and at the low-hour test point. Section 1051.520 specifies how to test your vehicle to develop deterioration factors that estimate the change in emissions over your vehicle's full useful life. Small-volume manufacturers may use assigned deterioration factors that we establish. Apply the deterioration factors as follows:

(1) For vehicles that use aftertreatment technology, such as catalytic converters, the exhaust deterioration factor is the ratio of exhaust emissions at the end of useful life to exhaust emissions at the low-hour test point. Adjust the official emission results for each tested vehicle at the selected test point by multiplying the measured emissions by the deterioration factor. If the factor is less than one, use one.

(2) For vehicles that do not use aftertreatment technology, the exhaust deterioration factor is the difference between exhaust emissions at the end of useful life and exhaust emissions at the low-hour test point. Adjust the official emission results for each tested vehicle at the selected test point by adding the factor to the measured emissions. If the factor is less than zero, use zero.

(d) After adjusting the emission levels for deterioration, round them to the same number of decimal places as the emission standard. Compare the rounded emission levels to the emission standard for each test vehicle.

§ 1051.245 How do I demonstrate that my engine family complies with evaporative emission standards?

(a) For certification, your engine family is considered in compliance with the evaporative emission standards in subpart B of this part if you do either of the following:

(1) You have test results showing permeation emission levels from the fuel tanks and fuel lines in the family are at or below the standards in § 1051.110 throughout the useful life.

(2) You comply with the design specifications in paragraph (e) of this section.

(b) Your engine family does not comply if any fuel tank or fuel line representing that family has test results showing emission levels above the standards.

(c) To compare emission levels with the emission standards, apply deterioration factors (to three significant figures) to the measured emission levels. The deterioration factor is a number that shows the relationship between emissions at the end of useful life and at the low-hour test point. For permeation emissions, the deterioration factor is the difference between evaporative emissions at the end of useful life and evaporative emissions at the low-hour test point. Adjust the official emission results for each tested vehicle at the selected test point by adding the factor to the measured emissions. If the factor is less than zero, use zero.

(1) Section 1051.515 specifies how to test your fuel tanks to develop deterioration factors that estimate the change in emissions over your vehicle's full useful life. Small-volume manufacturers may use assigned deterioration factors that we establish. Apply the deterioration factors as follows:

(i) Calculate the deterioration factor from emission tests performed before and after the durability tests described in § 1051.515(c) and using good engineering judgment. The durability tests described in § 1051.515(c) represent the minimum requirements for determining a deterioration factor. You may not use a deterioration factor that is less than the difference between evaporative emissions before and after

the durability tests described in § 1051.515(c).

(ii) Do not apply the deterioration factor to test results for tanks that have already undergone these durability tests.

(2) Determine the deterioration factor for fuel lines using good engineering judgment.

(d) After adjusting the emission levels for deterioration, round them to the same number of decimal places as the emission standard. Compare the rounded emission levels to the emission standard for each test vehicle.

(e) You may demonstrate for certification that your engine family complies with the evaporative emission standards by demonstrating that you use the following control technologies:

(1) For certification to the standards specified in § 1051.110(a) with the control technologies shown in the following table:

TABLE 1 OF § 1051.245.—DESIGN-CERTIFICATION TECHNOLOGIES FOR CONTROLLING TANK PERMEATION

If the tank permeability control technology is . . .	Then you may design-certify with a tank emission level of . . .
(i) A metal fuel tank with no non-metal gaskets or with gaskets made from a low-permeability material [1].	1.5 g/m ^{2}/day.
(ii) A metal fuel tank with non-metal gaskets with an exposed surface area of 1000 mm ^{2} or less.	1.5 g/m ^{2}/day.

[1] Permeability of 10 g/m ^{2}/day or less according to ASTM D 814–95 (incorporated by reference in § 1051.810).

(2) For certification to the standards specified in § 1051.110(b) with the control technologies shown in the following table:

TABLE 2 OF § 1051.245.—DESIGN-CERTIFICATION TECHNOLOGIES FOR CONTROLLING FUEL-LINE PERMEATION

If the fuel-line permeability control technology is . . . jennifer	Then you may design-certify with a fuel line permeation emission level of . . .
(i) Hose meeting Category 1 permeation specifications in SAE J2260 (incorporated by reference in § 1051.810).	15 g/m^2/day.
(ii) Hose meeting the R11–A or R12 permeation specifications in SAE J30 (incorporated by reference in § 1051.810).	15 g/m^2/day.

(3) We may establish additional design certification options where we find that new test data demonstrate that the use of other technology designs will ensure compliance with the applicable emission standards.

§ 1051.250 What records must I keep and make available to EPA?

(a) Organize and maintain the following records to keep them readily available; we may review these records at any time:

(1) A copy of all applications and any summary information you sent us.

(2) Any of the information we specify in § 1051.205 that you did not include in your application.

(3) A detailed history of each emission-data vehicle. In each history, describe all of the following:

(i) The emission-data vehicle's construction, including its origin and buildup, steps you took to ensure that it represents production vehicles, any components you built specially for it, and all emission-related components.

(ii) How you accumulated vehicle or engine operating hours, including the dates and the number of hours accumulated.

(iii) All maintenance (including modifications, parts changes, and other service) and the dates and reasons for the maintenance.

(iv) All your emission tests, including documentation on routine and standard tests, as specified in part 1065 of this chapter or other applicable test procedures regulations, and the date and purpose of each test.

(v) All tests to diagnose engine or emission-control performance, giving the date and time of each and the reasons for the test.

(vi) Any other significant events.

(b) Keep routine data from emission tests (such as test cell temperatures and relative humidity readings) for one year after we issue the associated certificate of conformity. Keep all other information specified in paragraph (a) of this section for eight years after we issue your certificate.

(c) Store these records in any format and on any media, as long as you can promptly send us organized, written records in English if we ask for them.

(d) Send us copies of any maintenance instructions or explanations if we ask for them.

§ 1051.255 When may EPA deny, revoke, or void my certificate of conformity?

(a) We may deny your application for certification if your engine family fails to comply with emission standards or other requirements of the regulation or the Act. Our decision may be based on any information available to us showing you do not meet emission standards or other requirements, including any testing that we conduct under paragraph (g) of this section. If we deny your application, we will explain why in writing.

(b) In addition, we may deny your application or revoke your certificate if you do any of the following:

(1) Refuse to comply with any testing or reporting requirements.

(2) Submit false or incomplete information (paragraph (d) of this section applies if this is fraudulent).

(3) Render inaccurate any test data.

(4) Deny us from completing authorized activities despite our presenting a warrant or court order (see § 1068.20 of this chapter).

(5) Produce vehicle or engines for importation into the United States at a location where local law prohibits us from carrying out authorized activities.

(c) We may void your certificate if you do not keep the records we require or do not give us information when we ask for it.

(d) We may void your certificate if we find that you intentionally submitted false or incomplete information.

(e) We may void your certificate for any family certified to an FEL above the allowable average if you fail to show in your end-of-year report that your average emission levels are below the

applicable standards in subpart B of this part, or that you have sufficient credits to offset a credit deficit for the model year.

(f) If we deny your application or revoke or void your certificate, you may ask for a hearing (see § 1051.820). Any such hearing will be limited to substantial and factual issues.

(g) We may conduct confirmatory testing of your vehicles as part of certification. We may deny your application for certification or revoke your certificate if your vehicles fail to comply with emission standards or other requirements during confirmatory testing.

Subpart D—Testing Production-line Engines

§ 1051.301 When must I test my production-line vehicles or engines?

(a) If you certify vehicles to the standards of this part, you must test them as described in this subpart. If your vehicle is certified to g/kW-hr standards, then test the engine; otherwise, test the vehicle. The provisions of this subpart do not apply to small-volume manufacturers.

(b) We may suspend or revoke your certificate of conformity for certain engine families if your production-line vehicles or engines do not meet the requirements of this part or you do not fulfill your obligations under this subpart (see §§ 1051.325 and 1051.340).

(c) Other requirements apply to vehicles and engines that you produce. Other regulatory provisions authorize us to suspend, revoke, or void your certificate of conformity, or order recalls for engines families without regard to whether they have passed these production-line testing requirements. The requirements of this subpart do not affect our ability to do selective enforcement audits, as described in part 1068 of this chapter. Individual vehicles and engines in families that pass these production-line testing requirements must also conform to all applicable regulations of this part and part 1068 of this chapter.

(d) You may ask to use an alternate program for testing production-line vehicles or engines. In your request, you must show us that the alternate program gives equal assurance that your products meet the requirements of this part. If we approve your alternate program, we may waive some or all of this subpart's requirements.

(e) If you certify an engine family with carryover emission data, as described in § 1051.235(c), and these equivalent engine families consistently pass the production-line testing requirements over the preceding two-year period, you may ask for a reduced testing rate for further production-line testing for that family. The minimum testing rate is one vehicle or engine per engine family. If we reduce your testing rate, we may limit our approval to a any number of model years. In determining whether to approve your request, we may consider the number of vehicles or engines that have failed the emission tests.

(f) We may ask you to make a reasonable number of production-line vehicles or engines available for a reasonable time so we can test or inspect them for compliance with the requirements of this part.

(g) The requirements of this subpart do not apply to engine families certified under the provisions of § 1051.630.

§ 1051.305 How must I prepare and test my production-line vehicles or engines?

(a) *Test procedures.* Test your production-line vehicles or engines using the applicable testing procedures in subpart F of this part to show you meet the emission standards in subpart B of this part.

(b) *Modifying a test vehicle or engine.* Once a vehicle or engine is selected for testing (see § 1051.310), you may adjust, repair, prepare, or modify it or check its emissions only if one of the following is true:

(1) You document the need for doing so in your procedures for assembling and inspecting all your production vehicles or engines and make the action routine for all the vehicles or engines in the engine family.

(2) This subpart otherwise specifically allows your action.

(3) We approve your action in advance.

(c) *Malfunction.* If a vehicle or engine malfunction prevents further emission testing, ask us to approve your decision to either repair it or delete it from the test sequence.

(d) *Setting adjustable parameters.* Before any test, we may adjust or require you to adjust any adjustable parameter to any setting within its physically adjustable range.

(1) We may adjust idle speed outside the physically adjustable range as needed only until the vehicle or engine has stabilized emission levels (see paragraph (e) of this section). We may ask you for information needed to establish an alternate minimum idle speed.

(2) We may make or specify adjustments within the physically adjustable range by considering their effect on emission levels, as well as how likely it is someone will make such an adjustment with in-use vehicles.

(3) We may adjust the air-fuel ratio within the adjustable range specified in § 1051.115(d).

(e) *Stabilizing emission levels.* Before you test production-line vehicles or engines, you may operate the vehicle or engine to stabilize the emission levels. Using good engineering judgment, operate your vehicles or engines in a way that represents the way they will be used. You may operate each vehicle or engine for no more than the greater of two periods:

(1) 50 hours.

(2) The number of hours you operated the emission-data vehicle used for certifying the engine family (see 40 CFR part 1065, subpart E, or the applicable regulations governing how you should prepare your test vehicle or engine).

(f) *Damage during shipment.* If shipping a vehicle or engine to a remote facility for production-line testing makes necessary an adjustment or repair, you must wait until after the after the initial emission test to do this work. We may waive this requirement if the test would be impossible or unsafe, or if it would permanently damage the vehicle or engine. Report to us, in your written report under § 1051.345, all adjustments or repairs you make on test vehicles or engines before each test.

(g) *Retesting after invalid tests.* You may retest a vehicle or engine if you determine an emission test is invalid. Explain in your written report reasons for invalidating any test and the emission results from all tests. If you retest a vehicle or engine, you may ask us to substitute results of the new tests for the original ones. You must ask us within ten days of testing. We will generally answer within ten days after we receive your information.

§ 1051.310 How must I select vehicles or engines for production-line testing?

(a) Use test results from two vehicles or engines for each engine family to calculate the required sample size for the test period. Update this calculation with each test.

(1) For engine families with projected annual sales of at least 1600, the test periods are consecutive quarters (3 months). If your annual production period is less than 12 months long, define your test periods by dividing your annual production period into approximately equal segments of 70 to 125 calendar days.

(2) For engine families with projected annual sales below 1600, the test period is the whole model year.

(b) Early in each test period, randomly select and test an engine from the end of the assembly line for each engine family.

(1) In the first test period for newly certified engines, randomly select and test one more engine. Then, calculate the required sample size for the test period as described in paragraph (c) of this section.

(2) In later test periods or for engine families relying on previously submitted test data, combine the new test result with the last test result from the previous test period. Then, calculate the required sample size for the new test period as described in paragraph (c) of this section.

(c) Calculate the required sample size for each engine family. Separately calculate this figure for HC, NO_X (or $HC+NO_X$), and CO (and other regulated pollutants). The required sample size is the greater of these calculated values. Use the following equation:

$$N = \left[\frac{(t_{95} \times \sigma}{(x - STD)}\right]^2 + 1$$

Where:

N = Required sample size for the model year.

t_{95} = 95% confidence coefficient, which depends on the number of tests completed, n, as specified in the table in paragraph (c)(1) of this section. It defines 95% confidence intervals for a one-tail distribution.

x = Mean of emission test results of the sample.

STD = Emission standard (or family emission limit, if applicable).

σ = Test sample standard deviation (see paragraph (c)(2) of this section).

(1) Determine the 95% confidence coefficient, t_{95}, from the following table:

n	t_{95}	n	t_{95}	n	t_{95}
2	6.31	12	1.80	22	1.72
3	2.92	13	1.78	23	1.72
4	2.35	14	1.77	24	1.71
5	2.13	15	1.76	25	1.71
6	2.02	16	1.75	26	1.71
7	1.94	17	1.75	27	1.71
8	1.90	18	1.74	28	1.70
9	1.86	19	1.73	29	1.70
10	1.83	20	1.73	30+	1.70
11	1.81	21	1.72	.....	.....

(2) Calculate the standard deviation, σ, for the test sample using the following formula:

$$\sigma = \sqrt{\frac{\sum (X_i - x)^2}{n - 1}}$$

Where:

X_i = Emission test result for an individual vehicle or engine.

n = The number of tests completed in an engine family.

(d) Use final deteriorated test results to calculate the variables in the equations in paragraph (c) of this section (see § 1051.315(a)).

(e) After each new test, recalculate the required sample size using the updated mean values, standard deviations, and the appropriate 95-percent confidence coefficient.

(f) Distribute the remaining vehicle or engine tests evenly throughout the rest of the year. You may need to adjust your schedule for selecting vehicles or engines if the required sample size changes. Continue to randomly select vehicles or engines from each engine family; this may involve testing vehicles or engines that operate on different fuels.

(g) Continue testing any engine family for which the sample mean, x, is greater than the emission standard. This applies if the sample mean for either HC, NO_X (or $HC+NO_X$), or CO (or other regulated pollutants) is greater than the emission standard. Continue testing until one of the following things happens:

(1) The sample size, n, for an engine family is greater than the required sample size, N, and the sample mean, x, is less than or equal to the emission standard. For example, if N = 3.1 after the third test, the sample-size calculation does not allow you to stop testing.

(2) The engine family does not comply according to § 1051.325.

(3) You test 30 vehicles or engines from the engine family.

(4) You test one percent of your projected annual U.S.-directed production volume for the engine family.

(5) You choose to declare that the engine family fails the requirements of this subpart. (h) If the sample-size calculation allows you to stop testing for a pollutant, you must continue measuring emission levels of that pollutant for any additional tests required under this section. However, you need not continue making the calculations specified in this section for that pollutant. This paragraph does not affect the requirements in section § 1051.320.

(i) You may elect to test more randomly chosen vehicles or engines than we require. Include these vehicles or engines in the sample-size calculations.

§ 1051.315 How do I know when my engine family fails the production-line testing requirements?

This section describes the pass-fail criteria for the production-line testing requirements. We apply this criteria on an engine family basis. See § 1051.320 for the requirements that apply to individual vehicles or engines that fail a production-line test. (a) Calculate your test results. Round them to the number of decimal places in the emission standard expressed to one more decimal place.

(1) *Initial and final test results.* Calculate and round the test results for each vehicle or engine. If you do several tests on a vehicle or engine, calculate the initial test results, then add them together and divide by the number of tests and round for the final test results on that vehicle or engine.

(2) *Final deteriorated test results.* Apply the deterioration factor for the engine family to the final test results (see § 1051.240(c)).

(b) Construct the following CumSum Equation for each engine family for HC, NO_X (or $HC+NO_X$), and CO emissions (and other regulated pollutants):

$$C_i = C_{i-1} + X_i - (STD + 0.25 \times \sigma)$$

Where:

C_i = The current CumSum statistic.

C_{i-1} = The previous CumSum statistic. For the first test, the CumSum statistic is 0 (*i.e.* $C_1 = 0$).

X_i = The current emission test result for an individual vehicle or engine.

STD = Emission standard.

(c) Use final deteriorated test results to calculate the variables in the equation in paragraph (b) of this section (see § 1051.315(a)).

(d) After each new test, recalculate the CumSum statistic.

(e) If you test more than the required number of vehicles or engines, include the results from these additional tests in the CumSum Equation.

(f) After each test, compare the current CumSum statistic, C_i, to the recalculated Action Limit, H, defined as $H = 5.0 \times \sigma$.

(g) If the CumSum statistic exceeds the Action Limit in two consecutive tests, the engine family fails the production-line testing requirements of this subpart. Tell us within ten working days if this happens. You may request to amend the application for certification to raise the FEL of the engine family at this point if you meet the requirements of § 1051.225(f).

(h) If you amend the application for certification for an engine family under § 1051.225, do not change any previous calculations of sample size or CumSum statistics for the model year.

§ 1051.320 What happens if one of my production-line vehicles or engines fails to meet emission standards?

(a) If you have a production-line vehicle or engine with final deteriorated test results exceeding one or more emission standards (see § 1051.315(a)), the certificate of conformity is automatically suspended for that failing vehicle or engine. You must take the following actions before your certificate of conformity can cover that vehicle or engine:

(1) Correct the problem and retest the vehicle or engine to show it complies with all emission standards.

(2) Include in your written report a description of the test results and the remedy for each vehicle or engine (see § 1051.345).

(b) You may request to amend the application for certification to raise the FEL of the entire engine family at this point (see § 1051.225).

§ 1051.325 What happens if an engine family fails the production-line requirements?

(a) We may suspend your certificate of conformity for an engine family if it fails under § 1051.315. The suspension may apply to all facilities producing vehicles or engines from an engine family, even if you find noncompliant vehicles or engines only at one facility.

(b) We will tell you in writing if we suspend your certificate in whole or in part. We will not suspend a certificate until at least 15 days after the engine family fails. The suspension is effective when you receive our notice.

(c) Up to 15 days after we suspend the certificate for an engine family, you may ask for a hearing (see § 1051.820). If we agree before a hearing that we used erroneous information in deciding to suspend the certificate, we will reinstate the certificate.

(d) Section 1051.335 specifies steps you must take to remedy the cause of the production-line failure. All the vehicles you have produced since the end of the last test period are presumed noncompliant and should be addressed in your proposed remedy. We may require you to apply the remedy to engines produced earlier if we determine that the cause of the failure is likely to have affected the earlier engines.

(e) You may request to amend the application for certification to raise the FEL of the engine family before or after we suspend your certificate if you meet the requirements of § 1051.225(f).

§ 1051.330 May I sell vehicles from an engine family with a suspended certificate of conformity?

You may sell vehicles that you produce after we suspend the engine family's certificate of conformity under § 1051.315 only if one of the following occurs:

(a) You test each vehicle or engine you produce and show it complies with emission standards that apply.

(b) We conditionally reinstate the certificate for the engine family. We may do so if you agree to recall all the affected vehicles and remedy any noncompliance at no expense to the owner if later testing shows that the engine family still does not comply.

§ 1051.335 How do I ask EPA to reinstate my suspended certificate?

(a) Send us a written report asking us to reinstate your suspended certificate. In your report, identify the reason for noncompliance, propose a remedy for the engine family, and commit to a date for carrying it out. In your proposed remedy include any quality control measures you propose to keep the problem from happening again.

(b) Give us data from production-line testing that shows the remedied engine family complies with all the emission standards that apply.

§ 1051.340 When may EPA revoke my certificate under this subpart and how may I sell these vehicles again?

(a) We may revoke your certificate for an engine family in the following cases:

(1) You do not meet the reporting requirements.

(2) Your engine family fails to comply with the requirements of this subpart and your proposed remedy to address a suspended certificate under § 1051.325 is inadequate to solve the problem or requires you to change the vehicle's design or emission-control system.

(b) To sell vehicles from an engine family with a revoked certificate of conformity, you must modify the engine family and then show it complies with the requirements of this part.

(1) If we determine your proposed design change may not control emissions for the vehicle's full useful life, we will tell you within five working days after receiving your report. In this case we will decide whether production-line testing will be enough for us to evaluate the change or whether you need to do more testing.

(2) Unless we require more testing, you may show compliance by testing production-line vehicles or engines as described in this subpart.

(3) We will issue a new or updated certificate of conformity when you have met these requirements.

§ 1051.345 What production-line testing records must I send to EPA?

Do all the following things unless we ask you to send us less information:

(a) Within 30 calendar days of the end of each calendar quarter, send us a report with the following information:

(1) Describe any facility used to test production-line vehicles or engines and state its location.

(2) State the total U.S.-directed production volume and number of tests for each engine family.

(3) Describe how you randomly selected vehicles or engines.

(4) Describe your test vehicles or engines, including the engine family's identification and the vehicle's model year, build date, model number, identification number, and number of hours of operation before testing for each test vehicle or engine.

(5) Identify where you accumulated hours of operation on the vehicles or engines and describe the procedure and schedule you used.

(6) Provide the test number; the date, time and duration of testing; test procedure; initial test results before and after rounding; final test results; and final deteriorated test results for all tests. Provide the emission results for all measured pollutants. Include information for both valid and invalid tests and the reason for any invalidation.

(7) Describe completely and justify any nonroutine adjustment, modification, repair, preparation, maintenance, or test for the test vehicle or engine if you did not report it separately under this subpart. Include the results of any emission measurements, regardless of the procedure or type of vehicle.

(8) Provide the CumSum analysis required in § 1051.315 for each engine family.

(9) Report on each failed vehicle or engine as described in § 1051.320.

(10) State the date the calendar quarter ended for each engine family.

(b) We may ask you to add information to your written report, so we can determine whether your new vehicles conform with the requirements of this subpart.

(c) An authorized representative of your company must sign the following statement:

We submit this report under Sections 208 and 213 of the Clean Air Act. Our production-line testing conformed completely with the requirements of 40 CFR part 1051. We have not changed production processes or quality-control procedures for the engine family in a way that might affect the emission control from production vehicles (or engines). All the information in this report is true and accurate, to the best of my knowledge. I know of the penalties for violating the Clean Air Act and the regulations. (Authorized Company Representative)

(d) Send electronic reports of production-line testing to the Designated Officer using an approved information format. If you want to use a different format, send us a written request with justification for a waiver.

(e) We will send copies of your reports to anyone from the public who asks for them. See § 1051.815 for information on how we treat information you consider confidential.

§ 1051.350 What records must I keep?

(a) Organize and maintain your records as described in this section. We may review your records at any time, so it is important to keep required information readily available.

(b) Keep paper records of your production-line testing for one full year after you complete all the testing required for an engine family in a model year. You may use any additional storage formats or media if you like.

(c) Keep a copy of the written reports described in § 1051.345.

(d) Keep the following additional records:

(1) A description of all test equipment for each test cell that you can use to test production-line vehicles or engines.

(2) The names of supervisors involved in each test.

(3) The name of anyone who authorizes adjusting, repairing, preparing, or modifying a test vehicle or engine and the names of all supervisors who oversee this work.

(4) If you shipped the vehicle or engine for testing, the date you shipped it, the associated storage or port facility, and the date the vehicle or engine arrived at the testing facility.

(5) Any records related to your production-line tests that are not in the written report.

(6) A brief description of any significant events during testing not otherwise described in the written report or in this section.

(7) Any information specified in § 1051.345 that you do not include in your written reports.

(e) If we ask, you must give us projected or actual production figures for an engine family. We may ask you to divide your production figures by rated brake power, displacement, fuel type, or assembly plant (if you produce vehicles or engines at more than one plant).

(f) Keep a list of vehicle or engine identification numbers for all the vehicles or engines you produce under each certificate of conformity. Give us this list within 30 days if we ask for it.

(g) We may ask you to keep or send other information necessary to implement this subpart.

Subpart E—Testing In-use Engines [Reserved]

Subpart F—Test Procedures

§ 1051.501 What procedures must I use to test my vehicles or engines?

This section describes test procedures that you use to show compliance with the requirements of this part. See § 1051.235 to determine when testing is required for certification. See subpart D of this part for the production-line testing requirements.

(a) *Snowmobiles.* For snowmobiles, use the equipment and procedures for spark-ignition engines in part 1065 of this chapter to show your snowmobiles meet the duty-cycle emission standards in § 1051.103. Measure HC, NO_X (as applicable), CO, and CO_2 emissions using the dilute sampling procedures in part 1065 of this chapter. For steady-state testing, you may use raw-gas sampling methods (such as those described in 40 CFR part 91), provided they have been shown to produce measurements equivalent to the dilute sampling methods specified in part 1065 of this chapter. Use the duty cycle in § 1051.505.

(b) *Motorcycles and ATVs.* For motorcycles and ATVs, use the equipment, procedures, and duty cycle in 40 CFR part 86, subpart F, to show your vehicles meet the exhaust emission standards in § 1051.105 or § 1051.107. Measure HC, NO_X, CO, and CO_2. If we allow you to certify ATVs based on engine testing, use the equipment, procedures, and duty cycle described or referenced in that section that allows engine testing. For motorcycles with engine displacement at or below 169 cc and all ATVs, use the driving schedule in paragraph (c) of Appendix I to 40 CFR part 86. For all other motorcycles use the driving schedule in paragraph (b) of Appendix I to part 86. With respect to vehicle-speed governors, test motorcycles and ATVs in their ungoverned configuration, unless we approve in advance testing in a governed configuration. We will only approve testing in a governed configuration if you can show that the governor is permanently installed on all production vehicles and is unlikely to be removed in-use. With respect to engine-speed governors, test motorcycles and ATVs in their governed configuration.

(c) *Permeation testing.* (1) Use the equipment and procedures specified in § 1051.515 to measure fuel tank permeation emissions.

(2) Prior to permeation testing of fuel hose, the hose must be preconditioned by filling the hose with the fuel specified in (d)(3) of this section, sealing the openings, and soaking the hose for 4 weeks at 23 °C±5° C. To measure fuel-line permeation emissions, use the equipment and procedures specified in SAE J30 (incorporated by reference in § 1051.810). The measurements must be performed at 23 ° C using the fuel specified in paragraph (d)(3) of this section.

(d) *Fuels.* Use the fuels meeting the following specifications:

(1) *Exhaust.* Use the fuels and lubricants specified in 40 CFR part 1065, subpart C, for all the testing and service accumulation we require in this part.

(2) *Fuel Tank Permeation.* (i) For the preconditioning soak described in § 1051.515(a)(1) and fuel slosh durability test described in § 1051.515(c)(4), use the fuel specified in Table 1 of § 1065.210 of this chapter blended with 10 percent ethanol by volume. As an alternative, you may use Fuel CE10, which is Fuel C as specified in ASTM D 471–98 (incorporated by reference in § 1051.810) blended with 10 percent ethanol by volume.

(ii) For the permeation measurement test in § 1051.515(b), use the fuel specified in Table 1 of § 1065.210 of this chapter. As an alternative, you may use the fuel specified in paragraph (d)(2)(i) of this section.

(3) *Fuel Hose Permeation.* Use the fuel specified in Table 1 of § 1065.210 of this chapter blended with 10 percent ethanol by volume for permeation testing of fuel lines and tanks. As an alternative, you may use Fuel CE10, which is Fuel C as specified in ASTM D 471–98

(incorporated by reference in § 1051.810) blended with 10 percent ethanol by volume.

(e) *Special procedures for engine testing.* (1) You may use special or alternate procedures, as described in § 1065.10 of this chapter.

(2) We may reject data you generate using alternate procedures if later testing with the procedures in part 1065 of this chapter shows contradictory emission data.

(f) *Special procedures for vehicle testing.* (1) You may use special or alternate procedures, as described in paragraph (f)(3) of this section.

(2) We may reject data you generate using alternate procedures if later testing with the otherwise specified procedures shows contradictory emission data.

(3)(i) The test procedures specified for vehicle testing are intended to produce emission measurements equivalent to those that would result from measuring emissions during in-use operation using the same vehicle configuration. If good engineering judgment indicates that use of the procedures in this part for a vehicle would result in measurements that are not representative of in-use operation of that vehicle, you must notify us. If we determine that using these procedures would result in measurements that are significantly unrepresentative and that changes to the procedures will result in more representative measurements that do not decrease the stringency of emission standards or other requirements, we will specify changes to the procedures. In your notification to us, you should recommend specific changes you think are necessary.

(ii) You may ask to use emission data collected using other test procedures, such as those of the California Air Resources Board or the International Organization for Standardization. We will allow this only if you show us that these data are equivalent to data collected using our test procedures.

(iii) You may ask to use alternate procedures that produce measurements equivalent to those obtained using the specified procedures. In this case, send us a written request showing that your alternate procedures are equivalent to the test procedures of this part. If you prove to us that the procedures are equivalent, we will allow you to use them. You may not use alternate procedures until we approve them.

(iv) You may ask to use special test procedures if your vehicle cannot be tested using the specified test procedures (for example, it is incapable of operating on the specified transient cycle). In this case, send us a written request showing that you cannot satisfactorily test your engines using the test procedures of this part. We will allow you to use special test procedures if we determine that they would produce emission measurements that are representative of those that would result from measuring emissions during in-use operation. You may not use special procedures until we approve them.

§ 1051.505 What special provisions apply for testing snowmobiles?

Use the following special provisions for testing snowmobiles:

(a) Measure emissions by testing the engine on a dynamometer with the steady-state duty cycle described in the following Table:

TABLE 1 OF § 1051.505.—5–MODE DUTY CYCLE FOR SNOWMOBILES

	Engine speed (percent of maximum test speed)	Torque (percent of maximum test torque at maximum test speed)	Minimum time in mode (minutes)	Weighting factors
Mode number:				
1	100	100	3.0	0.12
2	85	51	3.0	0.27
3	75	33	3.0	0.25
4	65	19	3.0	0.31
5	Idle	0	3.0	0.05

(b) During idle mode, operate the engine with the following parameters:

(1) Hold the speed within your specifications.

(2) Keep the throttle at the idle-stop position.

(3) Keep engine torque under 5 percent of the peak torque value at maximum test speed.

(c) For the full-load operating mode, operate the engine at wide-open throttle.

(d) Ambient temperatures during testing must be between 20 °C and 30 °C (68 °F and 86 °F), or other representative test temperatures, as specified in paragraph (g) of this section.

(e) See part 1065 of this chapter for detailed specifications of tolerances and calculations.

(f) You may test snowmobiles at ambient temperatures below 20 °C or using intake air temperatures below 20 °C if you show that such testing complies with § 1065.10(c)(1) of this chapter. You must get our approval before you begin the emission testing. For example, the following approach would be appropriate to show that such testing complies with § 1065.10(c)(1) of this chapter:

(1) Using good engineering judgment, instrument a representative snowmobile built with a representative engine from the family being tested with an appropriate temperature measuring device located in the intake air plenum where fuel spitback is not likely to occur.

(2) Choose a time and location with the following weather conditions: windspeed less than 10 knots, no falling precipitation, air temperature between −20 °C and 0 °C (−4 °F and 32 °F).

(3) Operate the snowmobile until its engine reaches a steady operating temperature.

(4) Operate the snowmobile on a level surface free of other vehicle traffic. Operate the snowmobile at each specified engine speed corresponding to each mode in the emissions test specific to the engine being tested. When readings are stable, record the temperature in the intake air plenum

and the ambient temperature. Calculate the temperature difference between the air in the plenum and the ambient air for each mode.

(5) Calculate the nominal intake air test temperature for each test mode as −10 °C (14 °F) plus the temperature difference for the corresponding mode determined in (g)(4) of this section.

(6) Before the emissions test, select the appropriate carburetor jetting for −10 °C (14 °F) conditions according to the jet chart. For each mode, maintain the inlet air temperature within 5 °C of the corresponding modal temperature calculated in (g)(5) of this section.

(7) Adjust other operating parameters to be consistent with operation at −10 °C (14 °F). For example, this may require that you modify the engine cooling system used in the laboratory to make its performance representative of cold-temperature operation.

§ 1051.510 What special provisions apply for testing ATV engines? [Reserved]

§ 1051.515 How do I test my fuel tank for permeation emissions?

Measure permeation emissions by weighing a sealed fuel tank before and after a temperature-controlled soak.

(a) *Preconditioning.* To precondition your fuel tank, follow these five steps:

(1) Fill the tank with the fuel specified in § 1051.501(d)(2)(i), seal it, and allow it to soak at 28 ±5 °C for 20 weeks. Alternatively, the tank may be soaked for a shorter period of time at a higher temperature if you can show that the hydrocarbon permeation rate has stabilized.

(2) Determine the fuel tank's internal surface area in square-meters accurate to at least three significant figures. You may use less accurate estimates of the surface area if you make sure not to overestimate the surface area.

(3) Fill the fuel tank with the test fuel specified in § 1051.501(d)(2)(ii) to its nominal capacity. If you fill the tank inside the temperature-controlled room or enclosure, do not spill any fuel.

(4) Allow the tank and its contents to equilibrate to 28±2 °C.

(5) Seal the fuel tank using nonpermeable fittings, such as metal or Teflon™.

(b) *Test run.* To run the test, follow these nine steps for a tank that was preconditioned as specified in paragraph (a) of this section:

(1) Weigh the sealed fuel tank and record the weight to the nearest 0.1 grams. (You may use less precise weights as long as the difference in mass from the start of the test to the end of the test has at least three significant figures.)

(2) Carefully place the tank within a ventilated temperature-controlled room or enclosure. Do not spill any fuel.

(3) Close the room or enclosure and record the time.

(4) Ensure that the measured temperature in the room or enclosure is 28±2 °C.

(5) Leave the tank in the room or enclosure for 2 to 4 weeks, consistent with good engineering judgment (based on the permeation rate). Do not stop soaking before 4 weeks unless you know that you can measure the weight loss during the test to at least three significant figures earlier.

(6) Hold the temperature of the room or enclosure to 28±2 °C; measure and record the temperature at least daily.

(7) At the end of the soak period, weigh the sealed fuel tank and record the weight to the nearest 0.1 grams. (You may use less precise weights as long as the difference in mass from the start of the test to the end of the test has at least three significant figures.)

(8) Subtract the weight of the tank at the end of the test from the weight of the tank at the beginning of the test; divide the difference by the internal surface area of the fuel tank. Divide this g/m^2 value by the number of test days (using at least three significant figures) to calculate the g/m^2/day emission rate. Example: If a tank with an internal surface area of 1.51 m^2 weighed 31882.3 grams at the beginning of the test and weighed 31760.2 grams after soaking for 25.03 days, then the g/m^2/day emission rate would be: (31882.3 g − 31760.2 g)/ 1.51 m^2/25.03 days = 3.23 g/m^2/day.

(9) Round your result to the same number of decimal places as the emission standard.

(c) *Durability testing.* You normally need to perform a separate durability demonstration for each substantially different combination of treatment approaches and tank materials. Perform these demonstrations before an emission test by taking the following steps, unless you can use good engineering judgment to apply the results of previous durability testing with a different fuel system. You can determine a deterioration factor by measuring emissions on a tank after these durability tests if you previously tested the same tank before the durability tests (but after the preconditioning step described in paragraph (a) of this section). For the purposes of deterioration factor determination, the permeation tests before and after the durability testing must be performed on the fuel specified in § 1051.501 (d)(2)(i). You may ask to exclude any of the following durability tests if you can clearly demonstrate that it does not affect the emissions from your fuel tank.

(1) Perform a pressure test by sealing the tank and cycling it between +2.0 psig and −0.5 psig and back to +2.0 psig for 10,000 cycles at a rate 60 seconds per cycle.

(2) Perform a sunlight-exposure test by exposing the tank to an ultraviolet light of at least 0.40 W-hr/m^2/min on the tank surface for 15 hours per day for 4 weeks. Alternatively, the fuel tank may be exposed to direct natural sunlight for an equivalent period of time, as long as you ensure that the tank is exposed to at least 450 daylight hours.

(3) Perform a slosh test by filling the tank to 40 percent of its capacity with the fuel specified in § 1051.501(d)(2)(i) and rocking it at a rate of 15 cycles per minute until you reach one million total cycles.

Use an angle deviation of +15° to −15° from level. This test must be performed at a temperature of 28°C ±5° C.

(4) Following the durability testing, the fuel tank must be soaked (as described in paragraph (a) of this section) to ensure that the permeation rate is stable. The period of slosh testing and the period of ultraviolet testing (if performed with fuel in the tank consistent with paragraph (a)(1) of this section) may be considered to be part of this soak, provided that the soak begins immediately after the slosh testing. To determine the final permeation rate, drain and refill the tank with fresh fuel, and repeat the test run (as described in paragraph (b) of this section) immediately after this soak period.

(d) *Flow chart.* The following figure presents a flow chart for the permeation testing described in this section, showing full test procedure with durability testing, as well as the simplified test procedure with an applied deterioration factor:

BILLING CODE 6560–50–P

Figure 1051.515-1: Flow Chart of Permeation Test Procedure with and without DF Determination

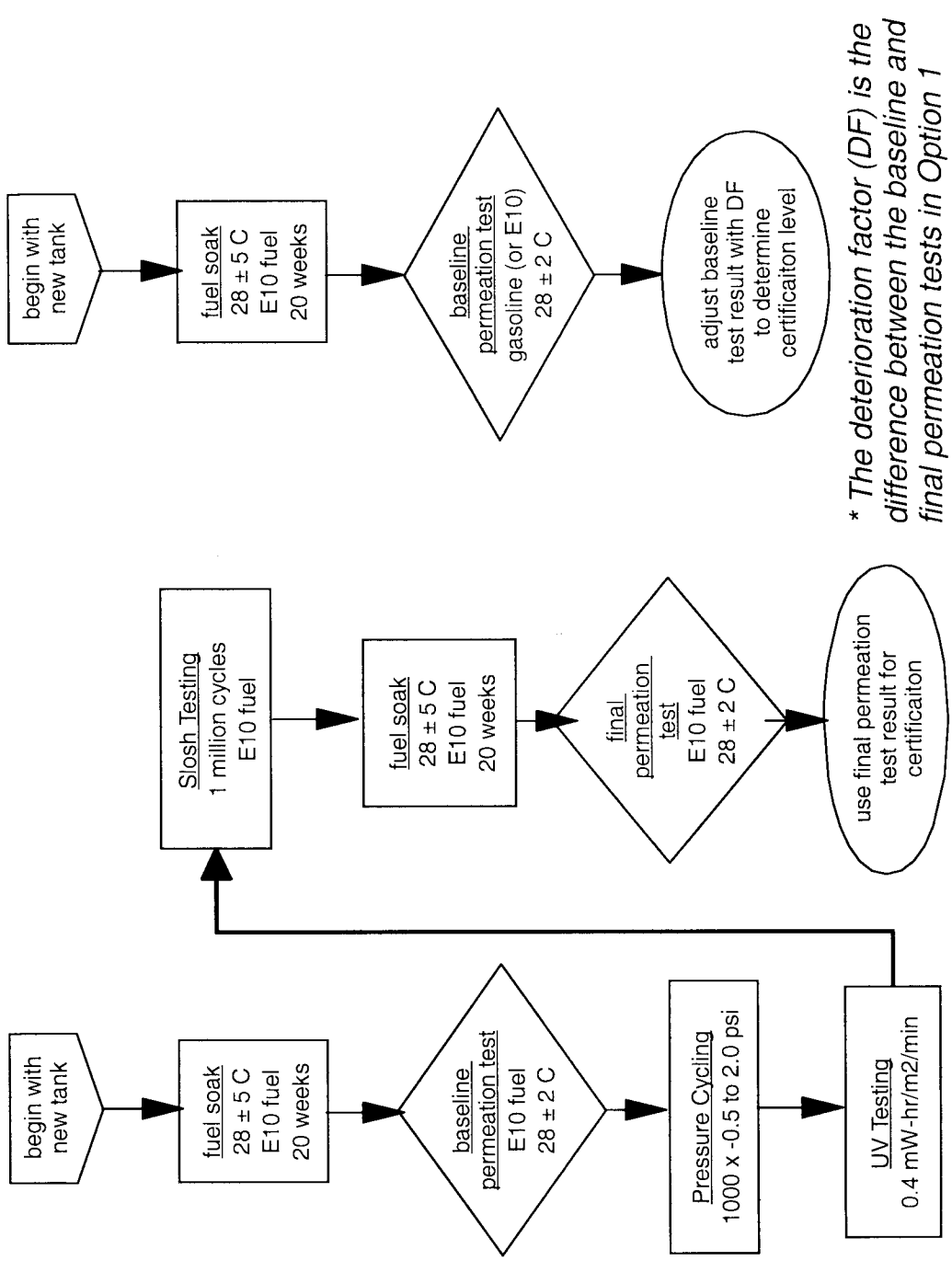

BILLING CODE 6560–50–C

§ 1051.520 How do I perform exhaust durability testing?

This section applies for durability testing to determine deterioration factors for exhaust emissions. Small-volume manufacturers may omit durability testing if they use our assigned deterioration factors that we establish based on our projection of the likely deterioration in the performance of specific emission controls.

(a) Calculate your deterioration factor by testing a vehicle or engine that is representative of your engine family at a low-hour test point and the end of its useful life. You may also test at intermediate points.

(b) Operate the vehicle or engine over a representative duty cycle for a period at least as long as the useful life (in hours or kilometers). You may operate the vehicle or engine continuously.

(c) You may perform critical emission-related maintenance during durability testing, consistent with § 1051.125(a). You may not perform any other emission-related maintenance during durability testing.

(d) Use a linear least-squares fit of your test data for each pollutant to calculate your deterioration factor.

(e) You may ask us to allow you to use other testing methods to determine deterioration factors, consistent with good engineering judgment.

Subpart G—Compliance Provisions

§ 1051.601 What compliance provisions apply to vehicles and engines subject to this part?

Engine and vehicle manufacturers, as well as owners, operators, and rebuilders of these vehicles, and all other persons, must observe the requirements and prohibitions in part 1068 of this chapter and the requirements of the Act. The compliance provisions in this subpart apply only to the vehicles and engines we regulate in this part.

§ 1051.605 What are the provisions for exempting vehicles from the requirements of this part if they use engines you have certified under the motor-vehicle program or the Large Spark-ignition program?

(a) You may ask for an exemption under this section if you are the manufacturer of an engine certified under the motor-vehicle program or the Large Spark-ignition program. See § 1051.610 if you are not the engine manufacturer.

(b)(1) The only requirements or prohibitions from this part that apply to a vehicle that is exempt under this section are in this section and § 1051.610.

(2) If the vehicles do not meet the criteria listed in paragraph (c) of this section, they will be subject to the standards and prohibitions of this part. Producing these vehicles without a valid exemption or certificate of conformity would violate the prohibitions in § 1068.101 of this chapter.

(3) Vehicles exempted under this section are subject to all the requirements affecting engines and vehicles under 40 CFR part 86 or part 1048, as applicable. The requirements and restrictions of 40 CFR part 86 or 1048 apply to anyone manufacturing these engines, anyone manufacturing vehicles that use these engines, and all other persons in the same manner as if these engines were used in a motor vehicle or other nonrecreational application.

(c) If you meet all the following criteria regarding your engine, the vehicle using the engine is exempt under this section:

(1) The vehicle is produced using an engine or incomplete vehicle covered by a valid certificate of conformity under 40 CFR part 86 or part 1048.

(2) No changes are made to the certified engine or vehicle that we could reasonably expect to increase any of its regulated emissions. For example, if any of the following changes are made to the engine, it does not qualify for this exemption:

(i) Any fuel system or evaporative system parameters are changed from the certified configuration (this does not apply to refueling emission controls).

(ii) Any other emission-related components are changed.

(iii) The engine cooling system is modified or assembled so that temperatures or heat rejection rates are outside the original engine's specified ranges.

(3) The engine must have the emission control information label we require under 40 CFR part 86 or part 1048.

(4) You must demonstrate that fewer than 50 percent of the engine model's total sales, from all companies, are used in recreational vehicles.

(d) If you manufacture both the engine and vehicle under this exemption, you must do all of the following to keep the exemption valid:

(1) Make sure the original emission control information label is intact.

(2) Add a permanent supplemental label to the engine in a position where it will remain clearly visible after installation in the vehicle. In your engine's emission control information label, do the following:

(i) Include the heading: ''Recreational Vehicle Emission Control Information''.

(ii) Include your full corporate name and trademark.

(iii) State: ''THIS ENGINE WAS ADAPTED FOR RECREATIONAL USE WITHOUT AFFECTING ITS EMISSION CONTROLS.''.

(iv) State the date you finished installation (month and year).

(3) Make sure the original and supplemental labels are readily visible after the engine is installed in the vehicle or, if the vehicle obscures the engine's emission control information label, make sure the vehicle manufacturer attaches duplicate labels, as described in § 1068.105 of this chapter.

(4) Send the Designated Officer a signed letter by the end of each calendar year (or less often if we tell you) with all the following information:

(i) Identify your full corporate name, address, and telephone number.

(ii) List the models you expect to produce under this exemption in the coming year.

(iii) State: ''We produce each listed model for recreational application without making any changes that could increase its certified emission levels, as described in 40 CFR 1051.605.''.

(e) If we request it, you must send us emission test data on the applicable recreational duty cycle(s). You may include the data in your application for certification under 40 CFR part 86 or part 1048, or in your letter requesting the exemption. We will generally not ask you for these data under normal circumstances, especially when they are more readily available from another source.

§ 1051.610 What are the provisions for producing recreational vehicles with engines already certified under the motor-vehicle program or the Large SI program?

(a) You may produce a recreational vehicle without certifying it under this part by using a certified motor vehicle engine, or Large SI engine. This section does not apply if you manufacture the engine yourself; see § 1051.605. In order to produce recreational vehicles under this section, you must meet all of the following criteria:

(1) The engine or vehicle is certified to 40 CFR part 86 or part 1048.

(2) The engine is not adjusted outside the certifying manufacturer's specifications (see § 1051.605(c)(2)).

(3) The engine or vehicle is not modified in any way that may affect its emission control. This does not apply to refueling emission controls.

(4) The vehicle is labeled consistent with paragraph (c) of this section.

(b)(1) The only requirements or prohibitions from this part that apply to a vehicle that is exempt under this section are in this section and § 1051.605.

(2) If the vehicles do not meet the criteria listed in § 1051.605(c) and paragraph (c) of this section, they will be subject to the standards and prohibitions of this part. Producing these vehicles without a valid exemption or certificate of conformity would violate the prohibitions in § 1068.101 of this chapter.

(3) Vehicles exempted under this section are subject to all the requirements affecting engines and vehicles under 40 CFR part 86 or part 1048, as applicable. The requirements and restrictions of 40 CFR part 86 or 1048 apply to anyone manufacturing these engines, anyone manufacturing vehicles that use these engines, and all other persons in the same manner as if these engines were used in a motor vehicle or other nonrecreational application.

(c)(1) Make sure the original emission control information label is intact after assembly in the vehicle.

(2) Add a permanent supplemental label to the vehicle in a position where it will be clearly visible. In this emission control information label, do the following:

(i) Include the heading: ''Recreational Vehicle Emission Control Information''.

(ii) Include your full corporate name and trademark.

(iii) State: ''THIS ENGINE WAS ADAPTED FOR RECREATIONAL USE WITHOUT AFFECTING ITS EMISSION CONTROLS.''.

(iv) State the date you finished installation (month and year).

(3) Send the Designated Officer a signed letter by the end of each calendar year (or less often if we tell you) with all the following information:

(i) Identify your full corporate name, address, and telephone number.

(ii) List the models you expect to produce under this exemption in the coming year.

(iii) State: ''We produce each listed model for recreational application without making any changes that could increase its certified emission levels, as described in 40 CFR 1051.605.''.

(d) If you build recreational vehicles under this section, we may require (as a condition of the exemption) that you comply with the emission-related warranty and recall responsibilities of this part.

(e) If you build a recreational vehicle using a motor vehicle engine that was certified as part of a vehicle-based engine family, we may require you to certify under this part instead of granting you an exemption under this part. If we do this, we may allow you to submit an abbreviated application for certification to show that you comply with the requirements of this part. You may reference the information in the original motor vehicle application.

§ 1051.615 What are the special provisions for certifying small recreational engines?

(a) You may certify ATVs with engines that have total displacement of less than 100 cc to the following emission exhaust standards instead of certifying them to the exhaust emission standards of subpart B of this part:

(1) 25.0 g/kW-hr $HC+NO_X$, with an FEL cap of 40.0 g/kW-hr $HC+NO_X$.

(2) 500 g/kW-hr CO.

(b) You may certify off-highway motorcycles with engines that have total displacement of 70 cc or less to the following emission exhaust standards instead of certifying them to the exhaust emission standards of subpart B of this part:

(1) 16.1 g/kW-hr $HC+NO_X$, with an FEL cap of 32.2 g/kW-hr $HC+NO_X$.

(2) 519 g/kW-hr CO.

(c) You may use the averaging, banking, and trading provisions of subpart H of this part to show compliance with this $HC+NO_X$ standards (an engine family meets emission standards even if its family emission limit is higher than the standard, as long as you show that the whole averaging set of applicable engine families meet the applicable emission standards using emission credits, and the vehicles within the family meet the family emission limit). You may not use averaging to meet the CO standards of this section.

(d) Measure emissions by testing the engine on a dynamometer with the steady-state duty cycle described in Table 1 of this section.

(1) During idle mode, hold the speed within your specifications, keep the throttle fully closed, and keep engine torque under 5 percent of the peak torque value at maximum test speed.

(2) For the full-load operating mode, operate the engine at wide-open throttle.

(3) See part 1065 of this chapter for detailed specifications of tolerances and calculations.

(4) Table 1 follows:

TABLE 1 OF § 1051.615.—6-MODE DUTY CYCLE FOR RECREATIONAL ENGINES

	Engine speed (percent of maximum test speed)	Torque (percent of maximum test torque at test speed)	Minimum time in mode (minutes)	Weighting factors
Mode number:				
1	85	100	5.0	0.09
2	85	75	5.0	0.20
3	85	50	5.0	0.29
4	85	25	5.0	0.30
5	85	10	5.0	0.07
6	Idle	0	5.0	0.05

(e) All other requirements and prohibitions of this part apply to these engines and vehicles.

§ 1051.620 When may a manufacturer obtain an exemption for competition recreational vehicles?

(a) We may grant you an exemption from the standards and requirements of this part for a new recreational vehicle on the grounds that it is to be used solely for competition. The provisions of this part other than those in this section do not apply to recreational vehicles that we exempt for use solely for competition.

(b) We will exempt vehicles that we determine will be used solely for competition. The basis of our determinations are described in paragraphs (b)(1), (b)(2), and (c) of this section. Exemptions granted under this section are good for only one model year and you must request renewal for each subsequent model year. We will not approve your renewal request if we determine the vehicles will not be used solely for competition.

(1) *Off-highway motorcycles.* Motorcycles that are marketed and labeled as only for competitive use and that meet at least four of the criteria listed in paragraphs (b)(1)(i) through (vi) of this section are considered to be used solely for competition, except in cases where other information is available that indicates that they are not used solely for competition. The following features are indicative of motorcycles used solely for competition:

(i) The absence of a headlight or other lights.

(ii) The absence of a spark arrestor.

(iii) The absence of manufacturer warranty.

(iv) Suspension travel greater than 10 inches.

(v) Engine displacement greater than 50 cc.

(vi) The absence of a functional seat. (For example, a seat less with than 30 square inches of seating surface would

generally not be considered a functional seat).

(2) *Snowmobiles and ATVs.* Snowmobiles and ATVs meeting all of the following criteria are considered to be used solely for competition, except in cases where other information is available that indicates that they are not used solely for competition:

(i) The vehicle or engine may not be displayed for sale in any public dealership.

(ii) Sale of the vehicle must be limited to professional racers or other qualified racers.

(iii) The vehicle must have performance characteristics that are substantially superior to noncompetitive models.

(c) Vehicles not meeting the applicable criteria listed in paragraph (b) of this section will be exempted only in cases where the manufacturer has clear and convincing evidence that the vehicles will be used solely for competition.

(d) You must permanently label vehicles exempted under this section to clearly indicate that they are to be used only for competition. Failure to properly label a vehicle will void the exemption for that vehicle.

(e) If we request it, you must provide us any information we need to determine whether the vehicles are used solely for competition.

§ 1051.625 What special provisions apply to unique snowmobile designs for small-volume manufacturers?

(a) If you are a small-volume manufacturer, we may permit you to produce up to 600 snowmobiles per year that are certified to less stringent emission standards than those in § 1051.103, as long as you meet all the conditions and requirements in this section.

(b) To apply for alternate standards under this section, send the Designated Officer a written request. In your request, do two things:

(1) Show that the snowmobile has unique design, calibration, or operating characteristics that make it atypical and infeasible or highly impractical to meet the emission standards in § 1051.103, considering technology, cost, and other factors.

(2) Identify the level of compliance you can achieve, including a description of available emission-control technologies and any constraints that may prevent more effective use of these technologies.

(c) You must give us other relevant information if we ask for it.

(d) An authorized representative of your company must sign the request and include the statement: ''All the information in this request is true and accurate, to the best of my knowledge.''.

(e) Send your request for this extension at least nine months before the relevant deadline. If different deadlines apply to companies that are not small-volume manufacturers, do not send your request before the regulations in question apply to the other manufacturers.

(f) If we approve your request, we will set alternate standards for your qualifying snowmobiles. These standards will not be above 400 g/kW-hr for CO or 150 g/kW-hr for HC.

(g) You may produce these snowmobiles to meet the alternate standards we establish under this section as long as you continue to produce them at the same or lower emission levels.

(h) You may not include snowmobiles you produce under this section in any averaging, banking, or trading calculations under Subpart H of this part.

(i) You must meet all the requirements of this part, except as noted in this section.

§ 1051.630 What special provisions apply to unique snowmobile designs for all manufacturers?

(a) We may permit you to produce up to 600 snowmobiles per year that are certified to the FELs listed in this section without new test data, as long as you meet all the conditions and requirements in this section.

(b) You may certify these snowmobiles with FELs of 560 g/kW-hr for CO and 270 g/kW-hr for HC (using the normal certification procedures).

(c) The emission levels described in this section are intended to represent worst-case emission levels. You may not certify snowmobiles under this section if good engineering judgment indicates that they have emission rates higher than these levels.

(d) Include snowmobiles you produce under this section in your averaging calculations under Subpart H of this part.

(e) You must meet all the requirements of this part, unless the regulations of this part specify otherwise.

§ 1051.635 What provisions apply to new manufacturers that are small businesses?

(a) If you are a small business (as defined by the Small Business Administration) that manufactures recreational vehicles, but does not otherwise qualify for the small-volume manufacturer provisions of this part, you may ask us to designate you to be a small-volume manufacturer. You may do this whether you began manufacturing recreational vehicles before, during, or after 2002.

(b) We may set other reasonable conditions that are consistent with the intent of this section and the Act. For example, we may place sales limits on companies that we designate to be small-volume manufacturers under this section.

Subpart H—Averaging, Banking, and Trading for Certification

§ 1051.701 General provisions.

(a) You may average, bank, and trade emission credits for purposes of certification as described in this subpart to show compliance with the standards of this part. To do this you must show that your average emission levels are below the applicable standards in subpart B of this part, or that you have sufficient credits to offset a credit deficit for the model year (as calculated in § 1051.720). If you cannot show in your end-of-year report that your average emission levels are below the applicable standards in subpart B of this part, or that you have sufficient credits to offset a credit deficit for the model year, we may void the certificates for all families certified to FELs above the allowable average. (b) The following averaging set restrictions apply:

(1) You may not average together engine families that are certified to different standards. You may, however, use banked credits that were generated relative to different standards, except as prohibited by paragraphs (b)(2) and (3) of this section, paragraph (e) of this section, or by other provisions in this part. For example, you may not average together within a model year off-highway motorcycles that are certified to the standards in § 1051.105(a)(1) and § 1051.105(a)(2); but you may use banked credits generated by off-highway motorcycles that are certified to the standards in § 1051.105(a)(1) to show compliance with the standards in § 1051.105(a)(2) in a later model year, and vice versa.

(2) There are separate averaging, banking, and trading programs for snowmobiles, ATVs, and off-highway motorcycles. You may not average or exchange banked or traded credits from engine families of one type of vehicle with those from engine families of another type of vehicle.

(3) You may not average or exchange banked or traded credits with other engine families if you use fundamentally different measurement procedures for the different engine families (for example, ATVs certified to

chassis-based vs. engine-based standards). This paragraph (b)(3) does not restrict you from averaging together engine families that use test procedures that we determine provide equivalent emission results.

(4) You may not average or exchange banked or traded exhaust credits with evaporative credits, or vice versa.

(c) The definitions of Subpart I of this part apply to this subpart. The following definitions also apply:

(1) *Average standard* means a standard that allows you comply by averaging all your vehicles under this part. See subpart B of this part to determine which standards are average standards.

(2) *Broker* means any entity that facilitates a trade between a buyer and seller.

(3) *Buyer* means the entity that receives credits as a result of trade.

(4) *Family emission limit (FEL)* has the meaning given in it in § 1051.801.

(5) *Reserved credits* means credits you have generated that we have not yet verified in reviewing the end-of-year report.

(6) *Seller* means the entity that provides credits during a trade.

(d) Do not include any exported vehicles in the certification averaging, banking, and trading program. Include only vehicles certified under this part.

§ 1051.705 How do I average emission levels?

(a) As specified in subpart B of this part, certify each vehicle to a family emission limit (FEL).

(b) Calculate a preliminary average emission level according to § 1051.720 using projected U.S.-directed production volumes for your application for certification.

(c) After the end of your model year, calculate a final average emission level according to § 1051.720 for each type of recreational vehicle or engine you manufacture or import. Use actual U.S.-directed production volumes.

(d) If your preliminary average emission level is below the allowable average standard, see § 1051.710 for information about generating and banking emission credits. These credits will be considered reserved until we verify them in reviewing the end-of-year report.

§ 1051.710 How do I generate and bank emission credits?

(a) If your average emission level is below the average standard, you may calculate credits according to § 1051.720.

(b) You may generate credits if you are a certifying manufacturer.

(c) You may bank unused emission credits, but only after the end of the calendar year and after we have reviewed your end-of-year reports. Credits you generate do not expire.

(d) During the calendar year and before you send in your end-of-year report, you may consider reserved any credits you originally designate for banking during certification. You may redesignate these credits for trading in your end-of-year report, but they are not valid to demonstrate compliance until verified.

(e) You may use for averaging or trading any credits you declared for banking from the previous calendar year that we have not reviewed. But, we may revoke these credits later—following our review of your end-of-year report or audit actions. For example, this could occur if we find that credits are based on erroneous calculations; or that emission levels are misrepresented, unsubstantiated, or derived incorrectly in the certification process.

§ 1051.715 How do I trade emission credits?

(a) You may trade only banked emission credits, not reserved credits.

(b) You may trade banked credits to any certifying manufacturer.

(c) If a negative credit balance results from a credit trade, both buyers and sellers are liable, except in cases involving fraud. We may void the certificates of all emission families participating in a negative trade.

(1) If you buy credits but have not caused the negative credit balance, you must only supply more credits equivalent to the amount of invalid credits you used.

(2) If you caused the credit shortfall, you may be subject to the requirement sof § 1051.730(b)(6).

§ 1051.720 How do I calculate my average emission level or emission credits?

(a) Calculate your average emission level for each type of recreational vehicle or engine for each model year according to the following equation and round it to the nearest tenth of a g/km or g/kW-hr. Use consistent units throughout the calculation.

(1) For exhaust emissions:

(i) Calculate the average emission level as:

$$\text{Emission level} = \left[\sum_i (\text{FEL})_i \times (\text{UL})_i \times (\text{Production})_i\right] \Big/ \left[\sum_i (\text{Production})_i \times (\text{UL})_i\right]$$

Where:

FEL_i = The FEL to which the engine family is certified.

UL_i = The useful life of the engine family.

$Production_i$ = The number of vehicles in the engine family.

(ii) Use U.S.-directed production projections for initial certification, and actual U.S.-directed production volumes to determine compliance at the end of the model year.

(2) For vehicles that have standards expressed as g/kW-hr and a useful life in km, convert the useful life to kW-hr based on the maximum power output observed over the emission test and an assumed vehicle speed of 30 km/hr as follows: UL (kW-hr) = UL (km) × Maximum Test Power (kW)÷30 km/hr. (Note: It is not necessary to include a load factor, since credit exchange is not allowed between vehicles certified to g/kW-hr standards and vehicles certified to g/km standards.)

(3) For evaporative permeation standards expressed as g/m²/day, use the useful life value in years multiplied by 365.24, and calculate the average emission level as:

$$\text{Emission level} = \left[\sum_i (\text{FEL})_i \times (\text{UL})_i \times (\text{Production})_i\right] \Big/ \left[\sum_i (\text{Production})_i \times (\text{UL})_i\right]$$

Where:

$Production_i$ = The number of vehicles in the engine family times the average internal surface area of the vehicles' fuel tanks.

(b) If your average emission level is below the average standard, calculate credits available for banking according to the following equation and round them to the nearest tenth of a gram:

$$\text{Credit} = \left[(\text{Average standard} - \text{Emission level})\right] \times \left[\sum_i (\text{Production})_i \times (\text{UL})_i\right]$$

(c) If your average emission level is above the average standard, calculate your preliminary credit deficit according to the following equation, rounding to the nearest tenth of a gram:

$$\text{Deficit} = \left[(\text{Emission level} - \text{Average standard})\right] \times \left[\sum_i (\text{Production})_i \times (\text{UL})_i\right]$$

§ 1051.725 What information must I keep?

(a) Maintain and keep five types of properly organized and indexed records for each engine family:

(1) Model year and EPA engine family.

(2) FEL.

(3) Useful life.

(4) Projected U.S.-directed production volume for the model year.

(5) Actual U.S.-directed production volume for the model year.

(b) Keep paper records of this information for three years from the due date for the end-of-year report. You may use any additional storage formats or media if you like.

(c) Keep a copy of all of the information you send us under § 1051.730.

(d) We may ask you to keep or send other information necessary to implement this subpart.

§ 1051.730 What information must I report?

(a) Include the following information in each of your applications for certification:

(1) A statement that, to the best of your belief, you will not have a negative credit balance for any type of recreational vehicle or engine when all credits are calculated. This means that if you believe that your average emission level will be above the standard (i.e., that you will have a deficit for the model year), you must have banked credits (or project to have received traded credits) to offset the deficit.

(2) Detailed calculations of projected emission credits (zero, positive, or negative) based on U.S.-directed production projections. If you project a credit deficit, state the source of credits needed to offset the credit deficit.

(b) At the end of each model year, send an end-of-year report.

(1) Your report must include three things:

(i) Calculate in detail your average emission level and any emission credits (positive, or negative) based on actual U.S.-directed production volumes.

(ii) If your average emission level is above the allowable average standard, demonstrate that you have the credits needed to offset the credit deficit. If you cannot demonstrate that you have the credits at the time you submit your end-of-year report, we may void the certificates for all families certified to FELs above the allowable average.

(iii) If your average emission level is below the allowable average standard, state whether you will reserve the credits for banking.

(2) Base your U.S.-directed production volumes on the point of first retail sale. You may consider distributors to be the point of first retail sale if all their engines are sold to ultimate buyers in the United States.

(3) Send end-of-year reports to the Designated Officer within 120 days of the end of the model year. If you send reports later, you are violating the Act.

(4) If you generate credits for banking and you do not send your end-of-year reports within 120 days after the end of the model year, you may not use or trade the credits until we receive and review your reports. You may not use projected credits pending our review.

(5) You may correct errors discovered in your end-of-year report, including errors in calculating credits according to the following table:

If—	And if—	Then we—
(i) Our review discovers an error in your end-of-year report that increases your credit balance.	the discovery occurs within 180 days of receipt	restore the credits for your use.
(ii) You discover an error in your report that increases your credit balance.	the discovery occurs within 180 days of receipt	restore the credits for your use.
(iii) We or you discover and error in your report that increases your credit balance.	the discovery occurs more than 180 days after receipt	do not restore the credits for your use.
(iv) We discover an error in your report that reduces your credit balance.	at any time after receipt	reduce your credit balance

(6) If our review of a your end-of year-report shows a negative balance, you may buy credits to bring your credit balance to zero. But you must buy 1.1 credits for each 1.0 credit needed. If enough credits are not available to bring

your credit balance to zero within 90 days of when we notify you, we may void the certificates for all families certified to FELs above the allowable average.

(c) Within 90 days of any credit trade, you must send the Designated Officer a report of the trade that includes three types of information:

(1) The corporate names of the buyer, seller, and any brokers.

(2) Copies of contracts related to credit trading from the buyer, seller, and broker, as applicable.

(d) Include in each report a statement certifying the accuracy and authenticity of its contents.

(e) We may void a certificate of conformity for any emission family if you do not keep the records this section requires or give us the information when we ask for it.

§ 1051.735 Are there special averaging provisions for snowmobiles?

For snowmobiles, you may only use credits for the same phase or set of standards against which they were generated, except as allowed by this section.

(a) *Restrictions.* (1) You may not use any Phase 1 or Phase 2 credits for Phase 3 compliance.

(2) You may not use Phase 1 HC credits for Phase 2 HC compliance. However, because the Phase 1 and Phase 2 CO standards are the same, you may use Phase 1 CO credits for compliance with the Phase 2 CO standards.

(b) *Special credits for next phase of standards.* You may choose to generate credits early for banking for purposes of compliance with later phases of standards as follows:

(1) If your corporate average emission level at the end of the model year exceeds the applicable (current) phase of standards (without the use of traded or previously banked credits), you may choose to redesignate some of your snowmobile production to a calculation to generate credits for a future phase of standards. To generate credits the snowmobiles designated must have an FEL below the emission level of that set of standards. This can be done on a pollutant specific basis.

(2) Do not include the snowmobiles that you redesignate in the final compliance calculation of your average emission level for the otherwise applicable (current) phase of standards. Your average emission level for the remaining (non-redesignated) snowmobiles must comply with the otherwise applicable (current) phase of standards.

(3) Include the snowmobiles that you redesignate in a separate calculation of your average emission level for redesignated engines. Calculate credits using this average emission level relative to the specific pollutant in the future phase of standards. These credits may be used for compliance with the future standards.

(4) For generating early Phase 3 credits, you may generate credits for $HC+NO_X$ or CO separately as described:

(i) To determine if you qualify to generate credits in accordance with paragraphs (b)(1) through (3) of this section, you must meet the credit trigger level. For $HC+NO_X$ this value is 62 g/kW-hr (which would be the $HC+NO_X$ standard that would result from inputting the highest allowable CO standard (275 g/kW-hr) into the Phase 3 equation). For CO the value is 200 g/kW-hr (which would be the CO standard that would result from inputting the highest allowable $HC+NO_X$ standard (90 g/kW-hr) into the Phase 3 equation).

(ii) $HC+NO_X$ and CO credits for Phase 3 are calculated relative to the 62 g/kW-hr and 200 g/kW-hr values, respectively.

(5) Credits can also be calculated for Phase 3 using both sets of standards. Without regard to the trigger level values, if your net emission reduction for the redesignated averaging set exceeds the requirements of Phase 3 in § 1051.103 (using both $HC+NO_X$ and CO in the Phase 3 equation in § 1051.103), then your credits are the difference between the Phase 3 reduction requirement of that section and your calculated value.

Subpart I—Definitions and Other Reference Information

§ 1051.801 What definitions apply to this part?

The following definitions apply to this part. The definitions apply to all subparts unless we note otherwise. All undefined terms have the meaning the Act gives to them. The definitions follow:

Act means the Clean Air Act, as amended, 42 U.S.C. 7401 et seq.

Adjustable parameter means any device, system, or element of design that someone can adjust (including those which are difficult to access) and that, if adjusted, may affect emissions or engine performance during emission testing or normal in-use operation. You may ask us to exclude a parameter that is difficult to access if it cannot be adjusted to affect emissions without significantly degrading performance, or if you otherwise show us that it will not be adjusted in use in a way that affect emissions

Aftertreatment means relating to any system, component, or technology mounted downstream of the exhaust valve or exhaust port whose design function is to reduce exhaust emissions.

All-terrain vehicle means a land-based or amphibious nonroad vehicle that meets the criteria listed in paragraph (1) of this definition; or, alternatively, the criteria of paragraph (2) of this definition but not the criteria of paragraph (3) of this definition.

(1) Vehicles designed to travel on four low pressure tires, having a seat designed to be straddled by the operator and handlebars for steering controls, and intended for use by a single operator and no other passengers are all-terrain vehicles.

(2) Other all-terrain vehicles have three or more wheels and one or more seats, are designed for operation over rough terrain, and are intended primarily for transportation. Golf carts generally do not meet these criteria since they are generally not designed for operation over rough terrain.

(3) Vehicles that meet the definition of ''offroad utility vehicle'' in this section are not all-terrain vehicles. However, § 1051.1(a) specifies that some offroad utility vehicles are required to meet the same requirements as all-terrain vehicles.

Auxiliary emission-control device means any element of design that senses temperature, engine rpm, motive speed, transmission gear, atmospheric pressure, manifold pressure or vacuum, or any other parameter to activate, modulate, delay, or deactivate the operation of any part of the emission-control system. This also includes any other feature that causes in-use emissions to be higher than those measured under test conditions, except as we allow under this part. For example, an accelerator pump would be considered an auxiliary emission-control device.

Brake power means the usable power output of the engine not including power required to operate fuel pumps, oil pumps, or coolant pumps.

Broker means any entity that facilitates a trade of emission credits between a buyer and seller.

Calibration means the set of specifications and tolerances specific to a particular design, version, or application of a component or assembly capable of functionally describing its operation over its working range.

Certification means obtaining a certificate of conformity for an engine family that complies with the emission standards and requirements in this part.

Compression-ignition means relating to a type of reciprocating, internal-combustion engine that is not a spark-ignition engine.

Crankcase emissions means airborne substances emitted to the atmosphere from any part of the engine crankcase's ventilation or lubrication systems. The crankcase is the housing for the crankshaft and other related internal parts.

Designated Officer means the Manager, Engine Programs Group (6405–J), U.S. Environmental Protection Agency, 1200 Pennsylvania Ave., Washington, DC 20460.

Emission-control system means any device, system, or element of design that controls or reduces the regulated emissions from a vehicle.

Emission-data vehicle means a vehicle or engine that is tested for certification.

Emission-related maintenance means maintenance that substantially affects emissions or is likely to substantially affect emissions deterioration.

Engine family means a group of vehicles with similar emission characteristics, as specified in § 1051.230.

Evaporative means relating to fuel emissions that result from permeation of fuel through the fuel system materials and from ventilation of the fuel system.

Family emission limit (FEL) means an emission level declared by the manufacturer to serve in place of an emission standard for certification under the emission-credit program in subpart H of this part. The family emission limit must be expressed to the same number of decimal places as the emission standard it replaces.

Fuel system means all components involved in transporting, metering, and mixing the fuel from the fuel tank to the combustion chamber(s), including the fuel tank, fuel tank cap, fuel pump, fuel filters, fuel lines, carburetor or fuel-injection components, and all fuel-system vents.

Good engineering judgment has the meaning we give it in § 1068.5 of this chapter.

Hydrocarbon (HC) means the hydrocarbon group on which the emission standards are based for each fuel type. For gasoline- and LPG-fueled engines, HC means total hydrocarbon (THC). For natural gas-fueled engines, HC means nonmethane hydrocarbon (NMHC). For alcohol-fueled engines, HC means total hydrocarbon equivalent (THCE).

Identification number means a unique specification (for example, model number/serial number combination) that allows someone to distinguish a particular vehicle or engine from other similar vehicle or engines.

Manufacturer has the meaning given in section 216(1) of the Act. In general, this term includes any person who manufactures a vehicle or engine for sale in the United States or otherwise introduces a new vehicle or engine into commerce in the United States. This includes importers that import for resale.

Maximum brake power means the maximum brake power of an engine at test conditions.

Maximum test power means the maximum brake power of an engine at maximum test speed.

Maximum test speed has the meaning we give in § 1065.515 of this chapter

Maximum test torque means the torque output observed at wide-open throttle at a given speed.

Model year means one of the following things:

(1) For freshly manufactured vehicles or engines (see definition of ''new,'' paragraph (1)), model year means one of the following:

(i) Calendar year.

(ii) Your annual new model production period if it is different than the calendar year. This must include January 1 of the calendar year for which the model year is named. It may not begin before January 2 of the previous calendar year and it must end by December 31 of the named calendar year.

(2) For a vehicle or engine that is converted to a nonroad vehicle or engine after being placed into service in a motor vehicle, model year means the calendar year in which the vehicle or engine was originally produced (see definition of ''new,'' paragraph (2)).

(3) For a nonroad vehicle excluded under § 1051.5 that is later converted to operate in an application that is not excluded, model year means the calendar year in which the vehicle was originally produced (see definition of ''new,'' paragraph (3)).

(4) For engines that are not freshly manufactured but are installed in new nonroad vehicles, model year means the calendar year in which the engine is installed in the new nonroad vehicle. This installation date is based on the time that final assembly of the vehicle is complete (see definition of ''new,'' paragraph (4)).

(5) For a vehicle or engine modified by an importer (not the original manufacturer) who has a certificate of conformity for the imported vehicle or engine (see definition of ''new,'' paragraph (5)), model year means one of the following:

(i) The calendar year in which the importer finishes modifying and labeling the vehicle or engine.

(ii) Your annual production period for producing vehicles or engines if it is different than the calendar year; follow the guidelines in paragraph (1)(ii) of this definition.

(6) For a vehicle or engine you import that does not meet the criteria in paragraphs (1) through (5) of the definition of ''new'' model year means the calendar year in which the manufacturer completed the original assembly of the vehicle or engine. In general, this applies to used equipment that you import without conversion or major modification.

Motor vehicle has the meaning we give in § 85.1703(a) of this chapter. In general, motor vehicle means a self-propelled vehicle that can transport one or more people or any material, but does not include any of the following:

(1) Vehicles having a maximum ground speed over level, paved surfaces no higher than 40 km per hour (25 miles per hour).

(2) Vehicles that lack features usually needed for safe, practical use on streets or highways-for example, safety features required by law, a reverse gear (except for motorcycles), or a differential.

(3) Vehicles whose operation on streets or highways would be unsafe, impractical, or highly unlikely. Examples are vehicles with tracks instead of wheels, very large size, or features associated with military vehicles, such as armor or weaponry.

New means relating to any of the following vehicles or engines:

(1) A freshly manufactured engine or vehicle for which the ultimate buyer has never received the equitable or legal title. This kind of vehicle might commonly be thought of as ''brand new.'' In the case of this paragraph (1), the vehicle or engine is no longer new when the ultimate buyer receives this title or the product is placed into service, whichever comes first.

(2) An engine originally manufactured as a motor vehicle engine that is later intended to be used in a piece of nonroad equipment. In this case, the engine ceases being a motor vehicle engine and becomes a ''new nonroad engine''. The engine is no longer new when it is placed into nonroad service.

(3) A nonroad engine that has been previously placed into service in an application we exclude under § 1051.5 or exempt under 1051.620, where that engine is installed in a piece of equipment for which these exclusions or exemptions do not apply. The engine is no longer new when it is placed into nonroad service. For example, this would apply to a competition vehicle that is no longer used solely for competition.

(4) An engine not covered by paragraphs (1) through (3) of this

definition that is intended to be installed in new nonroad equipment. The engine is no longer new when the ultimate buyer receives a title for the equipment or the product is placed into service, whichever comes first. This generally includes installation of used engines in new vehicles.

(5) An imported nonroad vehicle or engine covered by a certificate of conformity issued under this part, where someone other than the original manufacturer modifies the vehicle or engine after its initial assembly and holds the certificate. The vehicle or engine is no longer new when it is placed into nonroad service.

(6) An imported nonroad vehicle or engine that is not covered by a certificate of conformity issued under this part at the time of importation. This addresses uncertified engines and vehicles that have been placed into service in other countries and that someone seeks to import into the United States. Importation of this kind of new nonroad engine or vehicle is generally prohibited by part 1068 of this chapter.

Noncompliant vehicle or engine means a vehicle or engine that was originally covered by a certificate of conformity, but is not in the certified configuration or otherwise does not comply with the conditions of the certificate.

Nonconforming vehicle or engine means a vehicle or engine not covered by a certificate of conformity that would otherwise be subject to emission standards.

Nonmethane hydrocarbon means the difference between the emitted mass of total hydrocarbons and the emitted mass of methane.

Nonroad means relating to nonroad engines, or to vehicles or equipment that include nonroad engines.

Nonroad engine has the meaning given in § 1068.30 of this chapter. In general this means all internal-combustion engines except motor vehicle engines, stationary engines, or engines used solely for competition. This part only applies to nonroad engines that are used in snowmobiles, off-highway motorcycles, and ATVs (see § 1051.5).

Off-highway motorcycle means a two-wheeled vehicle with a nonroad engine and a seat (excluding marine vessels and aircraft). (Note: highway motorcycles are regulated under 40 CFR part 86.)

Offroad utility vehicle means a nonroad vehicle that has four or more wheels, seating for two or more persons, is designed for operation over rough terrain, and has either a rear payload 350 pounds or more or seating for six or more passengers. Vehicles intended primarily for recreational purposes that are not capable of transporting six passengers (such as dune buggies) are not offroad utility vehicles. (Note: § 1051.1(a) specifies that some offroad utility vehicles are required to meet the requirements that apply for all-terrain vehicles.)

Oxides of nitrogen has the meaning given it in 40 CFR part 1065.

Phase 1 means relating to Phase 1 standards of §§ 1051.103, 1051.105, or 1051.107, or other Phase 1 standards specified in subpart B of this part.

Phase 2 means relating to Phase 2 standards of § 1051.103, or other Phase 2 standards specified in subpart B of this part.

Phase 3 means relating to Phase 3 standards of § 1051.103, or other Phase 3 standards specified in subpart B of this part.

Physically adjustable range means the entire range over which an engine parameter can be adjusted, except as modified by § 1051.115(c). For parts described in § 1051.115(d), ''physically adjustable range'' means the adjustable range defined in that paragraph.

Placed into service means used for its intended purpose.

Point of first retail sale means the location at which the retail sale occurs. This generally means a dealership.

Recreational means, for purposes of this part, relating to snowmobiles, all-terrain vehicles, off-highway motorcycles, and other vehicles that we regulate under this part. Note that 40 CFR part 90 applies to other recreational vehicles.

Revoke means to discontinue the certificate for an engine family. If we revoke a certificate, you must apply for a new certificate before continuing to produce the affected vehicles or engines. This does not apply to vehicles or engines you no longer possess.

Round means to round numbers according to ASTM E29–02 (incorporated by reference in § 1051.810), unless otherwise specified.

Scheduled maintenance means adjusting, repairing, removing, disassembling, cleaning, or replacing components or systems that is periodically needed to keep a part from failing or malfunctioning. It also may mean actions you expect are necessary to correct an overt indication of failure or malfunction for which periodic maintenance is not appropriate.

Small-volume manufacturer means:

(1) For motorcycles and ATVs, a manufacturer that sold motorcycles or ATVs before 2003 and had annual U.S.-directed production of no more than 5,000 off-road motorcycles and ATVs (combined number) in 2002 and all earlier calendar years. For manufacturers owned by a parent company, the limit applies to the production of the parent company and all of its subsidiaries.

(2) For snowmobiles, a manufacturer that sold snowmobiles before 2003 and had annual U.S.-directed production of no more than 300 snowmobiles in 2002 and all earlier model years. For manufacturers owned by a parent company, the limit applies to the production of the parent company and all of its subsidiaries.

(3) A manufacturer that we designate to be a small-volume manufacturer under § 1051.635.

Snowmobile means a vehicle designed to operate outdoors only over snow-covered ground, with a maximum width of 1.5 meters or less.

Spark-ignition means relating to a gasoline-fueled engine, or any other engine with a spark plug (or other sparking device) and with operating characteristics significantly similar to the theoretical Otto combustion cycle. Spark-ignition engines usually use a throttle to regulate intake air flow to control power during normal operation.

Suspend means to temporarily discontinue the certificate for an engine family. If we suspend a certificate, you may not sell vehicles or engines from that engine family unless we reinstate the certificate or approve a new one.

Test sample means the collection of vehicles or engines selected from the population of an engine family for emission testing.

Test vehicle or engine means a vehicle or engine in a test sample.

Total hydrocarbon means the combined mass organic compounds measured by our total hydrocarbon test procedure, expressed as a hydrocarbon with a hydrogen-to-carbon mass ratio of 1.85:1.

Total hydrocarbon equivalent means the sum of the carbon mass contributions of non-oxygenated hydrocarbons, alcohols and aldehydes, or other organic compounds that are measured separately as contained in a gas sample, expressed as petroleum-fueled engine hydrocarbons. The hydrogen-to-carbon ratio of the equivalent hydrocarbon is 1.85:1.

Ultimate buyer means ultimate purchaser.

Ultimate purchaser means, with respect to any new vehicle or engine, the first person who in good faith purchases such vehicle or engine for purposes other than resale.

United States means the States, the District of Columbia, the Commonwealth of Puerto Rico, the

Commonwealth of the Northern Mariana Islands, Guam, American Samoa, the U.S. Virgin Islands, and the Trust Territory of the Pacific Islands.

Upcoming model year means for an engine family the model year after the one currently in production.

U.S.-directed production means the number of vehicle units, subject to the requirements of this part, produced by a manufacturer (and/or imported) for which the manufacturer has a reasonable assurance that sale was or will be made to ultimate buyers in the United States.

Useful life means the period during which a vehicle is required to comply with all applicable emission standards, specified as a number of kilometers, hours, and/or calendar years. It must be at least as long as both of the following:

(1) The expected average service life before the vehicle is remanufactured or retired from service.

(2) The minimum useful life value.

Void means to invalidate a certificate or an exemption. If we void a certificate, all the vehicles produced under that engine family for that model year are considered noncompliant, and you are liable for each vehicle produced under the certificate and may face civil or criminal penalties or both. If we void an exemption, all the vehicles produced under that exemption are considered uncertified (or nonconforming), and you are liable for each vehicle produced under the exemption and may face civil or criminal penalties or both. You may not produce any additional vehicles using the voided exemption.

Wide-open throttle means maximum throttle opening. Unless this is specified at a given speed, it refers to maximum throttle opening at maximum speed. For electronically controlled or other engines with multiple possible fueling rates, wide-open throttle also means the maximum fueling rate at maximum throttle opening under test conditions.

§ 1051.805 What symbols, acronyms, and abbreviations does this part use?

The following symbols, acronyms, and abbreviations apply to this part:

°—degrees.
ASTM—American Society for Testing and Materials.
ATV—all-terrain vehicle.
cc—cubic centimeters.
cm—centimeter.
C—Celsius.
CO—carbon monoxide.
CO_2—carbon dioxide.
EPA—Environmental Protection Agency.
F—Fahrenheit.
g—grams.
g/gal/day—grams per gallon per test day.
g/m^2/day—grams per meter-square per test day.
Hg—mercury.
hr—hours.
km—kilometer.
kW—kilowatt.
LPG—liquefied petroleum gas.
m—meters.
mm—millimeters.
mW—milliwatts.
NMHC—nonmethane hydrocarbons.
NO_X—oxides of nitrogen (NO and NO_X).
psig—pounds per square inches of gauge pressure.
rpm—revolutions per minute.
SAE—Society of Automotive Engineers.
SI—spark-ignition.
THC—total hydrocarbon.
THCE—total hydrocarbon equivalent.
U.S.C.—United States Code.

§ 1051.810 What materials does this part reference?

We have incorporated by reference the documents listed in this section. The Director of the **Federal Register** approved the incorporation by reference as prescribed in 5 U.S.C. 552(a) and 1 CFR part 51. Anyone may inspect copies at the U.S. EPA, Air and Radiation Docket and Information Center, 1301 Constitution Ave., NW., Room B102, EPA West Building, Washington, DC 20460 or the Office of the Federal Register, 800 N. Capitol St., NW., 7th Floor, Suite 700, Washington, DC.

(a) *ASTM material.* Table 1 of § 1051.810 lists material from the American Society for Testing and Materials that we have incorporated by reference. The first column lists the number and name of the material. The second column lists the sections of this part where we reference it. Anyone may purchase copies of these materials from the American Society for Testing and Materials, 100 Barr Harbor Dr., West Conshohocken, PA 19428. Table 1 follows:

TABLE 1 OF § 1051.810.—ASTM MATERIALS

Document number and name	Part 1051 reference
ASTM D471–98, Standard Test Method for Rubber Property-Effect of Liquids.	1051.501
ASTM D814–95 (reapproved 2000), Standard Test Method for Rubber Property-Vapor Transmission of Volatile Liquids.	1051.245
ASTM E29–02, Standard Practice for Using Significant Digits in Test Data to Determine Conformance with Specifications.	1051.801

(b) *SAE material.* Table 2 of § 1051.810 lists material from the Society of Automotive Engineering that we have incorporated by reference. The first column lists the number and name of the material. The second column lists the sections of this part where we reference it. Anyone may purchase copies of these materials from the Society of Automotive Engineers, 400 Commonwealth Drive, Warrendale, PA 15096. Table 2 follows:

TABLE 2 OF § 1051.810.—SAE MATERIALS

Document number and name	Part 1051 reference
SAE J30, Fuel and Oil Hoses, June 1998.	1051.245, 1051.501
SAE J1930, Electrical/Electronic Systems Diagnostic Terms, Definitions, Abbreviations, and Acronyms, May 1998.	1051.135
SAE J2260, Nonmetallic Fuel System Tubing with One or More Layers, November 1996.	1051.245

§ 1051.815 How should I request EPA to keep my information confidential?

(a) Clearly show what you consider confidential by marking, circling, bracketing, stamping, or some other method. We will store your confidential information as described in 40 CFR part 2. Also, we will disclose it only as specified in 40 CFR part 2.

(b) If you send us a second copy without the confidential information, we will assume it contains nothing confidential whenever we need to release information from it.

(c) If you send us information without claiming it is confidential, we may make it available to the public without further notice to you, as described in § 2.204 of this chapter.

§ 1051.820 How do I request a hearing?

See 40 CFR part 1068, subpart G, for information related to hearings.

PART 1065—TEST PROCEDURES AND EQUIPMENT

Subpart A—Applicability and General Provisions

Sec.
1065.1 Applicability.
1065.5 Overview of test procedures.
1065.10 Other test procedures.
1065.15 Engine testing.
1065.20 Limits for test conditions.

Subpart B—Equipment and Analyzers

1065.101 Overview.
1065.105 Dynamometer and engine equipment specifications.
1065.110 Exhaust gas sampling system; spark-ignition (SI) engines.

1065.115 Exhaust gas sampling system; compression-ignition engines. [Reserved]
1065.120 Raw sampling. [Reserved]
1065.125 Analyzers (overview/general response characteristics).
1065.130 Hydrocarbon analyzers.
1065.135 NO_X analyzers.
1065.140 CO and CO_2 analyzers.
1065.145 Smoke meters. [Reserved]
1065.150 Flow meters.
1065.155 Temperature and pressure sensors.

Subpart C—Test Fuels and Analytical Gases

1065.201 General requirements for test fuels.
1065.205 Test fuel specifications for distillate diesel fuel. [Reserved]
1065.210 Test fuel specifications for gasoline.
1065.215 Test fuel specifications for natural gas.
1065.220 Test fuel specifications for liquefied petroleum gas.
1065.240 Lubricating oils.
1065.250 Analytical gases.

Subpart D—Analyzer and Equipment Calibrations

1065.301 Overview.
1065.305 International calibration standards.
1065.310 CVS calibration. [Reserved]
1065.315 Torque calibration.

Subpart E—Engine Selection, Preparation, and Service Accumulation

1065.401 Selecting a test engine.
1065.405 Preparing and servicing a test engine.
1065.410 Service limits for stabilized test engines.
1065.415 Durability demonstration.

Subpart F—Running an Emission Test

1065.501 Overview of the engine dynamometer test procedures.
1065.510 Engine mapping procedures.
1065.515 Test cycle generation.
1065.520 Engine starting, restarting, and shutdown.
1065.525 Engine dynamometer test run.
1065.530 Test cycle validation criteria.

Subpart G—Data Analysis and Calculations

1065.601 Overview.
1065.605 Required records.
1065.610 Bag sample analysis.
1065.615 Bag sample calculations.

Subpart H—Particulate Measurements [Reserved]

Subpart I—Testing With Oxygenated Fuels

1065.801 Applicability.
1065.805 Sampling system.
1065.810 Calculations.

Subpart J—Field Testing

1065.901 Applicability.
1065.905 General provisions.
1065.910 Measurement accuracy and precision.
1065.915 Equipment specifications for SI engines.
1065.920 Equipment setup and test run for SI engines.
1065.925 Calculations.
1065.930 Specifications for mass air flow sensors.
1065.935 Specifications for THC analyzers.
1065.940 Specifications for NO_X and air/fuel sensors.
1065.945 Specifications for CO analyzers.
1065.950 Specifications for speed and torque measurement.

Subpart K—Definitions and Other Reference Information

1065.1001 Definitions.
1065.1005 Symbols, acronyms, and abbreviations.
1065.1010 Reference materials.
1065.1015 Confidential information.

Authority: 42 U.S.C. 7401–7671(q).

Subpart A—Applicability and General Provisions

§ 1065.1 Applicability.

(a) This part describes the procedures that apply to testing that we require for the following engines or for equipment using the following engines:

(1) Large nonroad spark-ignition engines we regulate under 40 CFR part 1048.

(2) Vehicles that we regulate under 40 CFR part 1051 (*i.e.,* recreational SI vehicles) that are regulated based on engine testing. See 40 CFR part 1051 to determine which vehicles may be certified based on engine test data.

(b) This part does not apply to any of the following engine or vehicle categories:

(1) Light-duty highway vehicles (see 40 CFR part 86).

(2) Heavy-duty highway Otto-cycle engines (see 40 CFR part 86).

(3) Heavy-duty highway diesel engines (see 40 CFR part 86).

(4) Aircraft engines (see 40 CFR part 87).

(5) Locomotive engines (see 40 CFR part 92).

(6) Land-based nonroad diesel engines (see 40 CFR part 89).

(7) General marine engines (see 40 CFR parts 89 and 94).

(8) Marine outboard and personal watercraft engines (see 40 CFR part 91).

(9) Small nonroad spark-ignition engines (see 40 CFR part 90).

(c) This part is addressed to you as a manufacturer, but it applies equally to anyone who does testing for you, and to us when we conduct testing to determine if you meet emission standards.

(d) Paragraph (a) of this section identifies the parts of the CFR that define emission standards and other requirements for particular types of engines. In this part 1065, we refer to each of these other parts generically as the ''standard-setting part.'' For example, 40 CFR part 1051 is always the standard-setting part for snowmobiles. Follow the standard-setting part if it differs from this part.

(e) For equipment subject to this part and regulated under equipment-based or vehicle-based standards, interpret the term ''engine'' in this part to include equipment and vehicles(see 40 CFR 1068.30).

§ 1065.5 Overview of test procedures.

(a) Some of the provisions of this part do not apply to all types of engines. For example, measurement of particulate matter is generally not required for spark-ignition engines. See the standard-setting part to determine which provisions in this part may not apply. Before using this part's procedures, read the standard-setting part to answer at least the following questions:

(1) How should I warm up the test engine before measuring emissions? Do I need to measure cold-start emissions during this warm-up segment of the duty cycle?

(2) Do I measure emissions while the warmed-up engine operates over a steady-state schedule, a transient schedule, or both?

(3) What are the speed and load points of the test cycle(s)?

(4) Which exhaust constituents do I need to measure?

(5) Does testing require full-flow dilute sampling? Is raw sampling acceptable? Is partial-flow dilute sampling acceptable?

(6) Do any unique specifications apply for test fuels?

(7) What maintenance steps may I do before or between tests on an emission-data engine?

(8) Do any unique requirements apply to stabilizing emission levels on a new engine?

(9) Do any unique requirements apply to testing conditions, such as ambient temperatures or pressures?

(10) Are there special emission standards that affect engine operation and ambient conditions?

(11) Are there different emission standards that apply to field testing under normal operation?

(b) The following table shows how this part divides testing specifications into subparts:

This subpart...	Describes these specifications or procedures...
Subpart A	General provisions for test procedures.
Subpart B	Equipment for testing.
Subpart C	Fuels and analytical gases for testing.

This subpart...	Describes these specifications or procedures...
Subpart D	How to calibrate test equipment.
Subpart E	How to prepare engines for testing, including service accumulation.
Subpart F	How to test for emissions.
Subpart G	How to calculate emission levels from measured data.
Subpart H	[Reserved].
Subpart I	How to measure emissions from engines fueled with an oxygenated fuel such as methanol or ethanol.
Subpart J	How to do field testing of in-use vehicles and equipment.
Subpart K	Definitions, abbreviations, and other reference information that apply to emission testing.

§ 1065.10 Other test procedures.

(a) *Your testing.* These test procedures apply for all testing that you do to show compliance with emission standards, with a few exceptions listed in this section.

(b) *Our testing.* These test procedures generally apply for testing that we do to determine if your engines comply with applicable emission standards. We may conduct other testing as allowed by the Act.

(c) *Exceptions.* You may be allowed or required to use test procedures other than those specified in this part in the following cases:

(1) The test procedures in this part are intended to produce emission measurements equivalent to those that would result from measuring emissions during in-use operation using the same engine configuration installed in a piece of equipment. If good engineering judgment indicates that use of the procedures in this part for an engine would result in measurements that are not representative of in-use operation of that engine, you must notify us. If we determine that using these procedures would result in measurements that are significantly unrepresentative and that changing the procedures will result in more representative measurements and not decrease the stringency of emission standards, we will specify changes to the procedures. In your notification to us, you should recommend specific changes you think are necessary.

(2) You may ask to use emission data collected using other test procedures, such as those of the California Air Resources Board or the International Organization for Standardization. We will allow this only if you show us that these data are equivalent to data collected using our test procedures.

(3) You may ask to use alternate procedures that produce measurements equivalent to those from the specified procedures. If you send us a written request showing your procedures are equivalent, and we agree that they are equivalent, we will allow you to use them. You may not use an alternate procedure until we approve them, either by: telling you directly that you may use this procedure; or issuing guidance to all manufacturers, which allows you to use the alternate procedure without additional approval.

(4) You may ask to use special test procedures if your engine cannot be tested under the specified procedures (for example, your engine cannot operate on the specified transient cycle). In this case, tell us in writing why you cannot satisfactorily test your engines using this part's procedures and ask to use a different approach. We will approve your special test procedures if we determine they would produce emission measurements that are representative of those that would result from measuring emissions during in-use operation. You may not use special procedures until we approve them.

(5) The standard-setting part may contain other specifications for test procedures that apply for your engines. In cases where it is not possible to comply with both the test procedures in those parts and the test procedures in this part, you must comply with the test procedures specified in the standard-setting part. Those other parts may also allow you to deviate from the test procedures of this part for other reasons.

§ 1065.15 Engine testing.

(a) This part describes the procedures for performing exhaust emission tests on engines that must meet emission standards.

(b) Generally, you must test an engine while operating it on a laboratory dynamometer over a prescribed sequence. (Subpart J of this part describes in-use testing of engines installed in vehicles or equipment.) You need to sample and analyze the exhaust gases generated during engine operation to determine the concentration of the regulated pollutants.

(c) Concentrations are converted into units of grams of pollutant per kilowatt-hour (g/kW-hr) or similar units for comparison to emission standards. If the applicable emission standards are expressed as g/bhp-hr, references in this part to kW should generally be interpreted to mean horsepower.

§ 1065.20 Limits for test conditions.

(a) Unless specified elsewhere in this chapter, you may conduct tests to determine compliance with duty-cycle emission standards at ambient temperatures of 20–30° C (68–86° F), ambient pressures of 600–775 mm Hg, and any ambient humidity level.

(b) Follow the standard-setting part for ambient conditions when testing to determine compliance with not-to-exceed or other off-cycle emission standards.

(c) For engine testing in a laboratory, you may heat, cool, and/or dehumidify the dilution air before it enters the CVS.

(d) For engine testing in a laboratory, if the barometric pressure observed while generating the maximum-torque curve changes by more than 25 mm Hg from the value measured when you started mapping, you must remap the engine. Also, to have a valid test, the average barometric pressure observed during the exhaust emission test must be within 25 mm Hg of the average observed during the maximum torque curve generation (see § 1065.510).

Subpart B—Equipment and Analyzers

§ 1065.101 Overview.

This subpart describes equipment and analyzers for measuring emissions. Subpart D of this part describes how to calibrate these devices and subpart C of this part defines the accuracy and purity specifications of analytical gases.

§ 1065.105 Dynamometer and engine equipment specifications.

(a) The engine dynamometer system must be able to control engine torque and speed simultaneously over the applicable test cycles within the accuracies specified in § 1065.530. If your dynamometer cannot meet the accuracy requirements in § 1065.530, you must get our approval before using it. For transient testing, issue command set points for engine torque and speed at 5 Hz or greater (10 Hz recommended). Record feedback engine torque and speed at least once every second during the test. In addition to these general requirements, make sure your engine or dynamometer's readout signals for speed and torque meet the following accuracies for all testing:

(1) Engine speed readout must be accurate to within ±2 percent of the absolute standard value. A 60-tooth (or greater) wheel in combination with a common mode rejection frequency counter is considered an absolute standard for engine or dynamometer speed.

(2) Engine flywheel torque readout must meet one of the two following standards for accuracy:

(i) Within ±3 percent of the NIST true value torque (as defined in § 1065.315).

(ii) The following accuracies:

If the full-scale torque value is...	Engine flywheel torque readout must be within...
T ≤ 550 ft-lbs.	±2.5 ft-lbs. of NIST true value.
550 < T ≤ 1050 ft-lbs.	±5.0 ft-lbs. of NIST true value.
T > 1050 ft-lbs.	±10.0 ft-lbs. of NIST true value.

(3) Option: You may use internal dynamometer signals (such as armature current) to measure torque if you can show that the engine flywheel torque during the test cycle conforms to paragraph (b)(2) of this section. Your measurements must compensate for increased or decreased flywheel torque because of the armature's inertia during accelerations and decelerations in the test cycle.

(b) To verify that the test engine has followed the test cycle correctly, collect the dynamometer or engine readout signals for speed and torque so you can statistically correlate the engine's actual performance with the test cycle (see § 1065.530). Normally, to do this, you would convert analog signals from the dynamometer or engine into digital values for computer storage, but all conversions must meet two criteria:

(1) Speed values used to evaluate cycles must be accurate to within 2 percent of the readout value for dynamometer or engine speed.

(2) Engine flywheel torque values used to evaluate cycles must be accurate to within 2 percent of the readout value for dynamometer or engine flywheel torque.

(c) You may combine the tolerances in paragraphs (a) and (b) of this section if you use the root mean square (RMS) method and refer accuracies of the RMS values to absolute-standard or NIST true values.

(1) Speed values used to evaluate cycles must be accurate to within ±2.8 percent of the absolute standard values, as defined in paragraph (a)(1) of this section.

(2) Engine flywheel torque values used to evaluate cycles must be accurate to within ±3.6 percent of NIST true values, as determined in § 1065.315.

§ 1065.110 Exhaust gas sampling system; spark-ignition (SI) engines.

(a) *General.* The exhaust gas sampling system described in this section is designed to measure the true mass of gaseous emissions in the exhaust of SI engines. (If the standard-setting part requires determination of THCE or NMHCE for your engine, then see subpart I of this part for additional requirements.) Under the constant-volume sampler (CVS) concept, you must measure the total volume of the mixture of exhaust and dilution air and collect a continuously proportioned volume of sample for analysis. You must control flow rates so that the ratio of sample flow to CVS flow remains constant. You then determine the mass emissions from the sample concentration and total flow over the test period.

(1) Do not let the CVS or dilution air inlet system artificially lower exhaust system backpressure. To verify proper backpressures, measure pressure in the raw exhaust immediately upstream of the inlet to the CVS. Continuously measure and compare the static pressure of the raw exhaust observed during a transient cycle—with and without the CVS operating. Static pressure measured with the CVS system operating must remain within ±5 inches of water (1.2 kPa) of the static pressure measured when disconnected from the CVS, at identical moments in the test cycle. (Note: We will use sampling systems that can maintain the static pressure to within ±1 inch of water (0.25 kPa) if your written request shows that this closer tolerance is necessary.) This requirement serves as a design specification for the CVS/dilution air inlet system, and should be performed as often as good engineering practice dictates (for example, after installing an uncharacterized CVS, adding an unknown inlet restriction on the dilution air, or otherwise altering the system).

(2) The system for measuring temperature (sensors and readout) must have an accuracy and precision of ±3.4° F (±1.9° C). The temperature measuring system for a CVS without a heat exchanger must respond within 1.50 seconds to 62.5 percent of a temperature change (as measured in hot silicone oil). For a CVS with a heat exchanger, there is no specific requirement for response time.

(3) The system for measuring pressure (sensors and readout) must have an accuracy and precision of ±3 mm Hg (0.4 kPa).

(4) The flow capacity of the CVS must be large enough to keep water from condensing in the system. You may dehumidify the dilution air before it enters the CVS. You also may heat or cool the air if three conditions exist:

(i) The air (or air plus exhaust gas) temperature does not exceed 250° F (121° C).

(ii) You calculate the CVS flow rate necessary to prevent water condensation based on the lowest temperature in the CVS before sampling. (We recommend insulating the CVS system when you use heated dilution air.)

(iii) The dilution ratio is high enough to prevent condensation in bag samples as they cool to room temperature.

(5) Bags for collecting dilution air and exhaust samples must be big enough for samples to flow freely.

(6) The general CVS sample system consists of a dilution air filter (optional) and mixing assembly, cyclone particulate separator (optional), a sample line for the bag sample or other sample lines a dilution tunnel, and associated valves and sensors for pressure and temperature. Except for the system to sample hydrocarbons from two-stroke engines, the temperature of the sample lines must be more than 3° C above the mixture's maximum dew point and less than 121° C. We recommend maintaining them at 113 ± 8° C. For the hydrocarbon sampling system with two-stroke engines, the temperature of the sample lines should be maintained at 191 ± 11° C. A general schematic of the SI sampling system is shown in Figure 1065.110–1, which follows:

BILLING CODE 6560–50–P

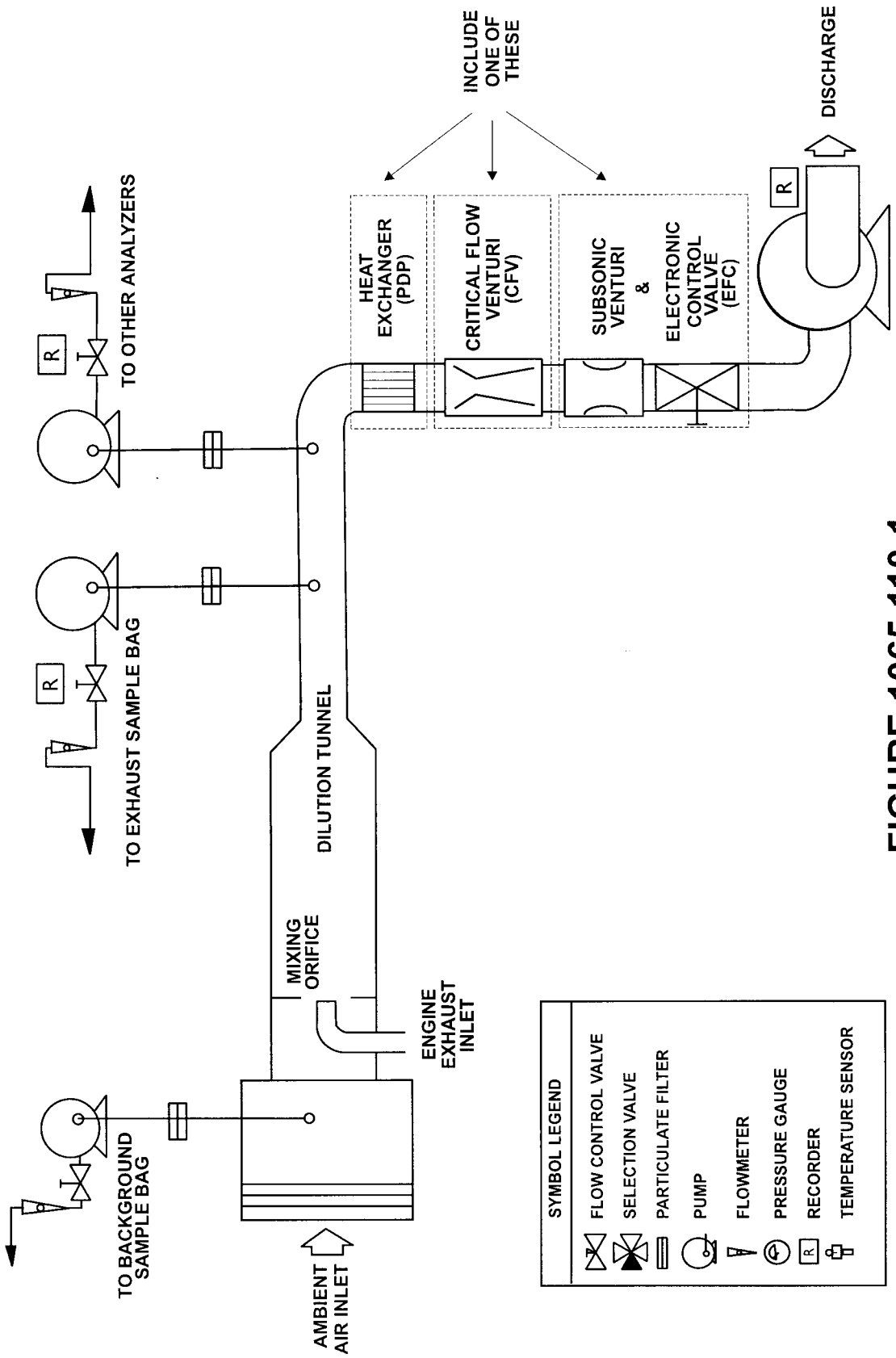

FIGURE 1065.110-1
GENERIC GASEOUS EMISSIONS SAMPLING SYSTEM

BILLING CODE 6460–50–C

(b) *Steady-state testing.* Constant proportional sampling is required throughout transient testing, but is not required throughout steady-state testing.

Steady-state testing requires that you draw a proportional sample for each test mode, but you may sample in different proportions for different test modes, as long as you know the ratio of the sample flow to total flow during each test mode. This allowance means that you may use simpler flow control systems for steady-state testing than are shown in Figure 1065.110–1 of this section.

(c) *Configuration variations.* Since various configurations can produce equivalent results, you need not conform exactly to the drawings in this subpart. You may use other components—such as instruments, valves, solenoids, pumps and switches—to provide more information and coordinate the components' functions. Based on good engineering judgment, you may exclude other components that are not needed to maintain accuracy on some systems.

(d) *CFV–CVS component description.* The flow characteristics of a Critical-Flow Venturi, Constant-Volume Sampler (CFV–CVS) are governed by the principles of fluid dynamics associated with critical flow. The CFV system is commonly called a constant-volume system (CVS) even though the mass flow varies. More properly, they are constant-proportion sampling systems, because small CFVs in each of the sample lines maintains proportional sampling while temperatures vary. This CFV maintains the mixture's flow rate at choked flow, which is inversely proportional to the square root of the gas temperature, and the system computes the actual flow rate continuously. Because pressures and temperatures are the same at all venturi inlets, the sample volume is proportional to the total volume. The CFV–CVS sample system uses critical flow venturis for the bag sample or other sample lines (these are shown in the figure as flow control valves) and a critical flow venturi for the dilution tunnel. All venturis must be maintained at the same temperature.

(e) *EFC–CVS component description.* The electronic flow control-CVS (EFC–CVS) system for sampling is identical to the CFV system described in paragraph (b) of this section, except that it adds electronic flow controllers (instead of sampling venturis), a subsonic venturi and an electronic flow controller for the CVS (instead of the critical flow venturi), metering valves, and separate flow meters (optional) to totalize sample flow volumes. The EFC sample system must conform to the following requirements:

(1) The system must meet all the requirements in paragraph (b) of this section.

(2) The ratio of sample flow to CVS flow must not vary by more than ±5 percent from the test's setpoint.

(3) Sample flow totalizers must meet the accuracy specifications in § 1065.150. You may obtain total volumes from the flow controllers, with our advance approval, if you can show they meet these accuracies.

(f) *Component description, PDP–CVS.* The positive-displacement pump-CVS (PDP–CVS) system for sampling is identical to the CFV system described in paragraph (b) of this section, except for the following changes:

(1) Include a heat exchanger.

(2) Use positive-displacement pumps for the CVS flow and sampling-system flow. You do not need sampling venturis or a venturi for the dilution tunnel. All pumps must operate at a constant flow rate.

(3) All pumps must operate at a nominally constant temperature. Maintain the gas mixture's temperature—measured at a point just ahead of the positive-displacement pump (and after the heat exchanger for the main CVS pump)—within ±10° F (±5.6° C) of the average operating temperature observed during the test. (You may estimate the average operating temperature from the temperatures observed during similar tests.) The system for measuring temperature (sensors and readout) must have an accuracy and precision of ±3.4° F (1.9° C), and response time consistent with good engineering judgment.

(g) *Mixed systems.* You may combine elements of paragraphs (d), (e), and (f) consistent with good engineering judgment. For example, you may control the CVS flow rate using a CFV, and control sample flow rates using electronic flow controllers.

§ 1065.115 Exhaust gas sampling system; compression-ignition engines. [Reserved]

§ 1065.120 Raw sampling. [Reserved]

§ 1065.125 Analyzers (overview/general response characteristics).

(a) *General.* The following sections and subparts describe the specifications for analyzers and analytical equipment:

(1) The analyzers for measuring hydrocarbon, NO_X, CO, and CO_2 emission concentrations are specified in § 1065.130 through § 1065.140.

(2) The analytical equipment for measuring particulate emissions is specified in Subpart H of this part.

(3) The analytical equipment for measuring emissions of oxygenated compounds (for example, methanol) is specified in Subpart I of this part.

(4) The analytical equipment for measuring in-use emissions is specified in Subpart J of this part.

(b) *Response time.* Analyzers must have the following response characteristics:

(1) For steady-state testing and transient testing with bag sample analysis, the analyzer must reach at least 90 percent of its final response within 5.0 seconds after any step change to the input concentration at or above 80 percent of full scale.

(2) For transient testing with continuous measurement, the analyzer must reach at least 90 percent of its final response within 1.0 second after any step change to the input concentration at or above 80 percent of full scale.

(c) *Precision and noise.* Analyzers must meet the following characteristics for precision and noise:

(1) Precision must be no worse than ±1 percent of full-scale concentration for each range used above 155 ppm (or ppmC), or ±2 percent for each range used below 155 ppm (or ppmC). For this paragraph (c)(1), we define precision as 2.5 times the standard deviation of 10 repetitive responses to a given calibration or span gas.

(2) Peak-to-peak response to zero and calibration or span gases over any 10-second period must be no more than 2 percent of full-scale chart deflection on all ranges used.

(d) *Drift.* Analyzers must meet specifications for zero-response and span drift.

(1) The zero-response drift during one hour must be less than 2 percent of full-scale chart deflection on the lowest range used. Zero-response is the mean response, including noise, to a zero-gas during a 30-second interval.

(2) The span drift during one hour must be less than 2 percent of full-scale chart deflection on the lowest range used. Span is the difference between the span-response and the zero-response. Span-response is the mean response, including noise, to a span gas during a 30-second interval.

(e) *Calibration.* See subpart D of this part for specifications to calibrate analyzers.

§ 1065.130 Hydrocarbon analyzers.

This section describes the requirements for flame ionization detectors (FIDs) used to measure hydrocarbons.

(a) Fuel the FID with a mixture of hydrogen in helium and calibrate it using propane.

(b) If you use a heated FID (required only for diesels and two-stroke, spark-ignition engines), keep the temperature 191 ±11° C).

(c) Use an overflow sampling system for heated continuous FIDs. (In an overflow system excess zero gas or span gas spills out of the probe when you are doing zero or span checks.)

(d) Do not premix the FID fuel and burner air.

(e) Make sure the FID meets accuracy and precision specifications in ISO 8178–1 (incorporated by reference in § 1065.1010).

§ 1065.135 NO_X analyzers.

This section describes the requirements for chemiluminescent detectors (CLD) used to measure NO_X. Good engineering practice may require the use of other detectors.

(a) A CLD must meet the following requirements:

(1) Make sure your CLD meets the accuracy and precision specifications in ISO 8178–1 (incorporated by reference in § 1065.1010).

(2) The NO to NO_2 converter must have an efficiency of at least 90 percent.

(3) Use an overflow sampling system for continuous CLDs. (In an overflow system excess zero gas or span gas spills out of the probe when you are doing zero or span checks.)

(4) You do not need a heated CLD to test spark-ignition engines.

(b) Using CLDs is generally acceptable even though they measure only NO and NO_2, since conventional engines do not emit significant amounts of other NO_X species.

§ 1065.140 CO and CO_2 analyzers.

This section describes the requirements for non-dispersive infrared absorption detectors (NDIR) to measure CO and CO_2.

(a) The NDIR must meet the applicable accuracy and precision specifications of ISO 8178–1 (incorporated by reference in § 1065.1010).

(b) The NDIR must meet the applicable quench and interference requirements of ISO 8178–1 (incorporated by reference in § 1065.1010).

§ 1065.145 Smoke meters. [Reserved]

§ 1065.150 Flow meters.

(a) Flow meters must have accuracy and precision of ±2 percent of point or better and be traceable to NIST standards.

(b) You may correct flow measurements for temperature or pressure, if your temperature and pressure measurements have accuracy and precision of ±2 percent of point or better (absolute).

§ 1065.155 Temperature and pressure sensors.

(a) Except where we specify otherwise in this part, must meet the applicable accuracy and precision specifications of ISO 8178–1 (incorporated by reference in § 1065.1010).

(b) Use good engineering judgment to design and operate your temperature and pressure measuring systems to minimize delays in response time and avoid hysteresis.

Subpart C—Test Fuels and Analytical Gases

§ 1065.201 General requirements for test fuels.

(a) For all emission tests, use test fuels meeting the specifications in this subpart, unless the standard-setting part directs otherwise. For any service accumulation on a test engine, if we do not specify a fuel, use the specified test fuel or a fuel typical of what you would expect the engine to use in service.

(b) We may require you to test the engine with each type of fuel it can use (for example, gasoline and natural gas).

(c) If you will produce engines that can run on a type of fuel (or mixture of fuels) that we do not specify in this subpart, we will allow you to test with fuel representing commercially available fuels of that type. However, we must approve your fuel's specifications before you may use it for emission testing.

(d) You may use a test fuel other than those we specify in this subpart if you do all of the following:

(1) Show that it is commercially available.

(2) Show that your engines will use only the designated fuel in service.

(3) Show that operating the engines on the fuel we specify would increase emissions or decrease durability.

(4) Get our written approval before you start testing.

(e) We may allow you to use other test fuels (for example, California Phase 2 gasoline) if they do not affect the demonstration of compliance.

§ 1065.205 Test fuel specifications for distillate diesel fuel. [Reserved]

§ 1065.210 Test fuel specifications for gasoline.

Gasoline used as a test fuel must meet the following specifications:

(a) Unless the standard-setting part requires testing with fuel appropriate for low temperatures, use gasoline test fuels meeting the specifications in the following table:

TABLE 1 OF § 1065.210.—GENERAL TEST-FUEL SPECIFICATIONS FOR GASOLINE

Item	Procedure [1]	Value [1]
Distillation Range:		
1. Initial boiling point, °C	ASTM D 86–01	23.9–35.0[2]
2. 10% point, °C	ASTM D 86–01	48.9–57.2
3.50% point, °C	ASTM D 86–01	93.3–110.0
4. 90% point, °C	ASTM D 86–01	148.9–162.8
5. End point, °C (maximum)	ASTM D 86–01	212.8.
Hydrocarbon composition:		
1. Olefins, volume %	ASTM D 1319–02	10 maximum
2. Aromatics, volume %	ASTM D 1319–02	35 maximum
3. Saturates	ASTM D 1319–02	Remainder
Lead (organic), g/liter	ASTM D 3237–97	0.013 maximum
Phosphorous, g/liter	ASTM D 3231–02	0.0013 maximum

TABLE 1 OF § 1065.210.—GENERAL TEST-FUEL SPECIFICATIONS FOR GASOLINE—Continued

Item	Procedure [1]	Value [1]
Sulfur, weight %	ASTM D 1266–98	0.008 maximum
Volatility (Reid Vapor Pressure), kPa	ASTM D 323–99a	60.0 to 63.4.[2,3]

[1]All ASTM standards are incorporated by reference in § 1065.1010.
[2]For testing at altitudes above 1 219 m, the specified volatility range is 52 to 55 kPa (7.5 to 8.0) and the specified initial boiling point range is 23.9° to 40.6° C.
[3]For testing unrelated to evaporative emissions, the specified range is 55 to 63 kPa (8.0 to 9.1 psi).

(b) If the standard-setting part requires testing with fuel appropriate for low temperatures, use gasoline test fuels meeting the specifications in the following table:

TABLE 2 OF § 1065.210.—LOW-TEMPERATURE TEST-FUEL SPECIFICATIONS FOR GASOLINE

Item	Procedure [1]	Value [1]
Distillation Range:		
1. Initial boiling point, °C	ASTM D 86–01	24.4–35.6.
2. 10% point, °C	ASTM D 86–01	36.7–47.8.
3. 50% point, °C	ASTM D 86–01	81.7–101.1.
4. 90% point, °C	ASTM D 86–01	157.8–174.4.
5. End point, °C (maximum)	ASTM D 86–01	211.7.
Hydrocarbon composition:		
1. Olefins, volume %	ASTM D 1319–02	17.5 maximum.
2. Aromatics, volume %	ASTM D 1319–02	30.4 maximum.
3. Saturates	ASTM D 1319–02	Remainder.
Lead (organic), g/liter	ASTM D 3237–97	0.013 maximum.
Phosphorous, g/liter	ASTM D 3231–02	0.005 maximum.
Sulfur, weight %	ASTM D 1266–98	0.08 maximum.
Volatility (Reid Vapor Pressure), kPa	ASTM D 323–99a	11.2—11.8 psi.

[1]All ASTM standards are incorporated by reference in § 1065.1010.

(c) Use gasoline test fuel with octane values that represent commercially available fuels for the appropriate application.

§ 1065.215 Test fuel specifications for natural gas.

(a) Natural gas used as a test fuel must meet the specifications in the following table:

TABLE 1 OF § 1065.215.—TEST-FUEL SPECIFICATIONS FOR NATURAL GAS

Item	Procedure[1]	Value (mole percent)
1. Methane	ASTM D 1945–96	87.0 minimum.
2. Ethane	ASTM D 1945–96	5.5 maximum.
3. Propane	ASTM D 1945–96	1.2 maximum.
4. Butane	ASTM D 1945–96	0.35 maximum.
5. Pentane	ASTM D 1945–96	0.13 maximum.
6. C6 and higher	ASTM D 1945–96	0.1 maximum.
7. Oxygen	ASTM D 1945–96	1.0 maximum.
8. Inert gases (sum of CO_2 and N_2)	ASTM D 1945–96	5.1 maximum.

[1]All ASTM standards are incorporated by reference in § 1065.1010.

(b) At ambient conditions, the fuel must have a distinctive odor detectable down to a concentration in air of not more than one-fifth of the lower flammability limit.

§ 1065.220 Test fuel specifications for liquefied petroleum gas.

(a) Liquefied petroleum gas used as a test fuel must meet the specifications in the following table:

TABLE 1 OF § 1065.220.—TEST-FUEL SPECIFICATIONS FOR LIQUEFIED PETROLEUM GAS

Item	Procedure [1]	Value
1. Propane	ASTM D 2163–91	85.0 vol. percent minimum.
2. Vapor pressure at 38° C	ASTM D 1267–02 or 2598–02 [2]	14 bar maximum.
3. Volatility residue (evaporated temp., 35° C)	ASTM D 1837–02	–38° C maximum.
4. Butanes	ASTM D 2163–91	5.0 vol. percent maximum.
5. Butenes	ASTM D 2163–91	2.0 vol. percent maximum.
6. Pentenes and heavier	ASTM D 2163–91	0.5 vol. percent maximum.
7. Propene	ASTM D 2163–91	10.0 vol. percent maximum.
8. Residual matter (residue on evap. of 100 ml oil stain observ.)	ASTM D 2158–02	0.05 ml maximum pass.[3]
9. Corrosion, copper strip	ASTM D 1838–91	No. 1 maximum.
10. Sulfur	ASTM D 2784–98	80 ppm maximum.
11. Moisture content	ASTM D 2713–91	pass.

[1] All ASTM standards are incorporated by reference in § 1065.1010.
[2] If these two test methods yield different results, use the results from ASTM D 1267–02.
[3] The test fuel must not yield a persistent oil ring when you add 0.3 ml of solvent residue mixture to a filter paper in 0.1 ml increments and examine it in daylight after two minutes (see ASTM D 2158–02).

(b) At ambient conditions, the fuel must have a distinctive odor detectable down to a concentration in air of not over one-fifth of the lower flammability limit.

§ 1065.240 Lubricating oils.

Lubricating oils you use to comply with this part must be commercially available and represent the oil that will be used with your in-use engines.

§ 1065.250 Analytical gases.

Analytical gases that you use to comply with this part must meet the accuracy and purity specifications of this section. You must record the expiration date specified by the gas supplier and may not use any gas after the expiration date.

(a) *Pure gases.* Use the ''pure gases'' shown in the following table:

TABLE 1 OF § 1065.250.—CONCENTRATION LIMITS FOR PURE GASES

Gas type	Maximum contaminant concentrations				Oxygen content
	Organic carbon	Carbon monoxide	Carbon dioxide	Nitric oxide (NO)	
Purified Nitrogen	1 ppmC	1 ppm	400 ppm	0.1 ppm	NA.
Purified Oxygen	NA	NA	NA	NA	99.5–100.0%.
Purified Synthetic Air, or Zero-Grade Air.	1 ppmC	1 ppm	400 ppm	0.1 ppm	18–21%.

(b) *Fuel for flame ionization detectors.* Use a hydrogen-helium mixture as the fuel. Make sure the mixture contains 40 ± 2 percent hydrogen and no more than 1 ppmC of organic carbon or 400 ppm of CO_2.

(c) *Calibration and span gases.* Apply the following provisions to calibration and span gases:

(1) Use the following gas mixtures, as applicable, for calibrating and spanning your analytical instruments:

(i) Propane in purified synthetic air. You may ask us to allow you to use propane in purified nitrogen for high concentrations of propane.

(ii) CO in purified nitrogen.

(iii) NO and NO_2 in purified nitrogen (the amount of NO_2 in this calibration gas must not exceed 5 percent of the NO content).

(iv) Oxygen in purified nitrogen.

(v) CO_2 in purified nitrogen.

(vi) Methane in purified synthetic air.

(2) The calibration gases in paragraph (c)(1) of this section must be traceable to within one percent of NIST gas standards or other gas standards we have approved. Span gases in paragraph (c)(1) of this section must be accurate to

within two percent of true concentration, where true concentration refers to NIST gas standards, or other gas standards we have approved. Record concentrations of calibration gas as volume percent or volume ppm.

(3) You may use gases for species other than those in paragraph (c)(1) of this section (such as methanol in air gases used to determine response factors), as long as they meet the following criteria:

(i) They are traceable to within ±2 percent of NIST gas standards or other standards we have approved.

(ii) They remain within ±2 percent of the labeled concentration. Show this by measuring quarterly with a precision of ±2 percent (two standard deviations) or by using another method we approve. You may take multiple measurements. If the true concentration of the gas changes by more than two percent, but less than ten percent, you may relabel the gas with the new concentration.

(4) You may generate calibration and span gases using precision blending devices (gas dividers) to dilute gases with purified nitrogen or with purified synthetic air. Make sure the mixing device produces a concentration of blended calibration gases that is accurate to within ± 1.5 percent. To do so, you must know the concentration of primary gases used for blending to an accuracy of at least ± 1 percent, traceable to NIST gas standards or other gas standards we have approved. For each calibration incorporating a blending device, verify the blending accuracy between 15 and 50 percent of full scale. You may optionally check the blending device with an instrument that is linear by nature (for example, using NO gas with a CLD). Adjust the instrument's span value with the span gas connected directly to it. Check the blending device at the used settings to ensure that the difference between nominal values and measured concentrations at each point stays within ± 0.5 percent of the nominal value.

(d) *Oxygen interference gases.* Gases to check oxygen interference are mixtures of oxygen, nitrogen, and propane. The oxygen concentration must be 20–22 percent and the propane concentration must be 50–90 percent of the maximum value in the most typically used FID range. Independently measure the concentration of total hydrocarbons plus impurities by chromatographic analysis or by dynamic blending.

Subpart D—Analyzer and Equipment Calibrations

§ 1065.301 Overview.

Calibrate all analyzers and equipment at least annually, but make the actual frequency consistent with good engineering judgment. We may establish other guidelines as appropriate. Calibrate following specifications in one of three sources:

(a) Recommendations from the manufacturer of the analyzers or equipment.

(b) 40 CFR part 86, subpart F or subpart N.

(c) 40 CFR part 90, subparts D and E, as applicable.

§ 1065.305 International calibration standards.

(a) You may ask to use international standards for calibration.

(b) You need not ask for approval to use standards that have been shown to be traceable to NIST standards.

§ 1065.310 CVS calibration. [Reserved]

§ 1065.315 Torque calibration.

You must use one of two techniques to calibrate torque: the lever-arm dead-weight or the transfer technique. You may use other techniques if you show they are equally accurate. The NIST ''true value'' torque is defined as the torque calculated by taking the product of an NIST traceable weight or force and a sufficiently accurate horizontal distance along a lever arm, corrected for the lever arm's hanging torque.

(a) The lever-arm dead-weight technique involves placing known weights at a known horizontal distance from the torque-measuring device's center of rotation. You need two types of equipment:

(1) *Calibration weights.* This technique requires at least six calibration weights for each range of torque-measuring device used. Equally space the weights and make sure each one is traceable to NIST weights. You also may use weights certified by a U.S. state government's bureau of weights and measures. If your laboratory is outside the U.S., see § 1065.305 for information about using non-NIST standards. You may account for effects of changes in gravitational constant at the test site.

(2) *Lever arm.* This technique also requires a lever arm at least 20 inches long. Make sure the horizontal distance from the torque-measurement device's centerline to the point where you apply the weight is accurate to within ±0.10 inches. You must balance the arm or know its hanging torque to within ±0.1 ft-lbs.

(b) The transfer technique involves calibrating a master load cell (dynamometer case load cell). You may calibrate the master load cell with known calibration weights at known horizontal distances. Or you may use a hydraulically actuated, precalibrated, master load cell and then transfer this calibration to the device that measures the flywheel torque. The transfer technique involves three main steps:

(1) Precalibrate a master load cell or calibrate it following paragraph (a)(1) of this section. Use known weights traceable to NIST with the lever arms specified in paragraph (b)(2) of this section. Run or vibrate the dynamometer during this calibration to reduce static hysteresis.

(2) Use lever arms at least 20 inches long. The horizontal distances from the master load cell's centerline to the dynamometer's centerline and to the point where you apply weight or force must be accurate to within ±0.10 inches. Balance the arms or know their net hanging torque to within ±0.1 ft-lbs.

(3) Transfer calibration from the case or master load cell to the torque-measuring device with the dynamometer operating at a constant speed. Calibrate the torque-measurement device's readout to the master load cell's torque readout at a minimum of six loads spaced about equally across the full useful ranges of both measurement devices. (Good engineering practice requires that both devices have about the same useful ranges of torque measurement.) Transfer the calibration so it meets the accuracy requirements in § 1065.105(a)(2) for readouts from the torque-measurement device.

Subpart E—Engine Selection, Preparation, and Service Accumulation

§ 1065.401 Selecting a test engine.

While all engine configurations within a certified engine family must comply with the applicable standards in the standard-setting part, you are not required to test each configuration for certification.

(a) Select for testing according to the following guidance the engine configuration within the engine family that is most likely to exceed an emission standard:

(1) Test the engine that we specify, whether we do this through general guidance or give you specific instructions.

(2) If we do not tell you which engine to test, follow any instructions in the standard-setting part.

(3) If we do not tell you which engine to test and the standard-setting part does

not include specifications for selecting test engines, use good engineering judgment to select the engine configuration within the engine family that is most likely to exceed an emission standard.

(b) In the absence of other information, the following characteristics are appropriate to consider when selecting the engine to test:

(1) Maximum fueling rates.

(2) Maximum in-use engine speed (governed or ungoverned, as applicable).

(3) Highest sales volume.

(c) We may select any engine configuration within the engine family for our testing.

§ 1065.405 Preparing and servicing a test engine.

(a) If you are testing an emission-data engine for certification, make sure you have built it to represent production engines.

(b) Run the test engine, with all emission-control systems operating, long enough to stabilize emission levels. If you accumulate 50 hours of operation, you may consider emission levels stable without measurement.

(c) Do not service the test engine before you stabilize emission levels, unless we approve other maintenance in advance. This prohibition does not apply to your recommended oil and filter changes for newly produced engines, or to idle-speed adjustments.

(d) Select engine operation for accumulating operating hours on your test engines to represent normal in-use operation for the engine family.

(e) If you need more than 50 hours to stabilize emission levels, record your reasons and the method you use to do this. Give us these records if we ask for them.

§ 1065.410 Service limits for stabilized test engines.

(a) After you stabilize the test engine's emission levels, you may do scheduled maintenance, other than during emission testing, as the standard-setting part specifies.

(b) You may not do any unscheduled maintenance to the test engine or its emission-control system or fuel system without our advance approval. Unscheduled maintenance includes adjusting, repairing, removing, disassembling, cleaning, or replacing the test engine. We may approve routine maintenance that is not scheduled such as maintaining the proper oil level.

(1) We may approve other unscheduled maintenance if all of the following occur:

(i) You determine that a part failure or system malfunction (or the associated repair) does not make the engine unrepresentative of production engines in the field and does not require anyone to access the combustion chamber.

(ii) Something clearly malfunctions (such as persistent misfire, engine stall, overheating, fluid leakage, or loss of oil pressure) and needs maintenance or repair.

(iii) You give us a chance to verify the extent of the malfunction before you do the maintenance.

(2) If we determine that a part's failure or a system's malfunction (or the associated repair) has made the engine unrepresentative of production engines, you may no longer use it as a test engine.

(3) You may not do unscheduled maintenance based on emission measurements from the test engine.

(4) Unless we approve otherwise in advance, you may not use equipment, instruments, or tools to identify bad engine components unless you specify they should be used for scheduled maintenance on production engines. In this case, if they are not generally available, you must also make them available at dealerships and other service outlets.

(c) If you do maintenance that might affect emissions, you must completely test the engine for emissions before and after the maintenance, unless we waive this requirement.

(d) If your test engine has a major mechanical failure that requires you to take it apart, you may no longer use it as a test engine.

§ 1065.415 Durability demonstration.

If the standard-setting part requires durability testing, you must accumulate service in a way that represents how you expect the engine to operate in use. You may accumulate service hours using an accelerated schedule, such as through continuous operation.

(a) *Maintenance.* The following limits apply to the maintenance that we allow you to do on test engine:

(1) You may perform scheduled maintenance that you recommend to operators, but only if it is consistent with the standard-setting part's restrictions.

(2) You may perform additional maintenance only if we approve it in advance, as specified in § 1065.410(b).

(3) If your test engine has a major mechanical failure that requires you to take it apart, you may no longer use it as a test engine.

(b) *Emission measurements.* You must measure emissions following two main requirements:

(1) Perform emission tests to determine deterioration factors consistent with good engineering judgment. Evenly space any tests between the first and last test points throughout the durability period.

(2) Perform emission tests following the provisions of this part and the standard-setting part.

Subpart F—Running an Emission Test

§ 1065.501 Overview of the engine dynamometer test procedures.

(a) The engine dynamometer test procedure measures brake-specific emissions of hydrocarbons (total and nonmethane, as applicable), carbon monoxide, and oxides of nitrogen. To perform this test procedure, you first dilute exhaust emissions with ambient air and collect a continuous proportional sample for analysis, then analyze the composite samples (either in bags after the test or continuously during the test). The general test procedure consists of a test cycle made of one or more segments (check the standard-setting part for specific cycles):

(1) Either a cold-start cycle (where you measure emissions) or a warm-up cycle (where you do not measure emissions).

(2) A hot-start transient test (some test cycles may omit engine starting from the ''hot-start'' cycle).

(3) A steady-state test.

(b) Measure power using the dynamometer's feedback signals for torque and speed. The power measurement produces a brake kilowatt-hour value that allows you to calculate brake-specific emissions (see Subpart G of this part).

(c) Prepare engines for testing consistent with § 1065.10(c)(1) and according to the following provisions:

(1) When you test an engine or operate it for service accumulation, use the complete engine with all emission-control devices installed and functioning.

(2) Install the fan for any air-cooled engine (if applicable).

(3) You may install accessories such as an oil cooler, alternators, and air compressors or simulate their loading if they are typical of in-use operation. Apply this loading during all testing operations, including mapping.

(4) You may install a production-type starter on the engine.

(5) Cool the engine in a way that will maintain its operating temperatures including the intake air, oil, water temperatures about the same as they would be during normal operation. You may use auxiliary fans if necessary. You may use rust inhibitors and lubrication additives, up to the levels that the additive manufacturer recommends.

You may also use antifreeze mixtures and other coolants typical of those approved for use by the manufacturer.

(6) Use representative exhaust and air-intake systems. Make sure the exhaust restriction is 80 to 100 percent of the recommended maximum specified exhaust restriction and the air inlet restriction is between that of a clean filter and the maximum restriction specification. As the manufacturer, you are liable for emission compliance from the minimum in-use restrictions to the maximum restrictions you specify for that particular engine.

§ 1065.510 Engine mapping procedures.

(a) *Torque map.* Map your engine's torque while it is mounted on the dynamometer. Use the torque curve resulting from the mapping to convert the normalized torque values in the engine cycle to actual torque values for the test cycle. Make sure the speed ranges at least from the warm no-load idle speed to 105 percent of the maximum test speed. Because you determine the maximum test speed from the torque map, you may have to perform a preliminary torque map to determine the full mapping range. You may perform this preliminary torque map while the engine warms up. To map the engine, do the following things in sequence:

(1) Warm up the engine so oil and water temperatures (on an absolute scale such as the Kelvin scale) vary by less than two percent for two minutes; or until the thermostat opens if the engine-coolant system includes a thermostat.

(2) Operate the engine at the warm no-load idle speed.

(3) Fully open the throttle.

(4) While maintaining wide-open throttle and full-load, keep the engine at minimum speed for at least 15 seconds. Record the average torque during the last 5 seconds.

(5) In increments of 100±20 rpm, determine the maximum torque curve for the full speed range. Hold each test point for 15 seconds and record the average torque over the last 5 seconds. You may use larger increments for engines with maximum test speed over 4000 rpm, as long as you include at least 40 points and space them evenly.

(6) Fit all data points recorded with a cubic spline, Akima, or other technique we approve in advance. The resultant curve must be accurate to within ±1.0 ft-lbs. of all recorded engine torques.

(b) *Torque map with continual engine speed sweep.* In place of paragraphs (a)(1) through (a)(4) of this section, you may do a continual sweep of engine speed. While operating at wide-open throttle, increase the engine speed at an average rate of 8±1 rpm/sec over the full speed range. You may use higher sweeping rates for naturally-aspirated engines, in accordance with good engineering judgment. Record speed and torque points at a rate of at least one point per second. Connect all points generated under this approach by linear interpolation.

(c) *Alternate mapping.* You may use other mapping techniques if you believe those in paragraphs (a) and (b) of this section are unsafe or unrepresentative for any engine or engine family. These alternate techniques must satisfy the intent of the specified mapping procedures—to determine the maximum available torque at all engine speeds that occur during the test cycles. Report deviations from this section's mapping techniques for reasons of safety or representativeness. In no case, however, may you use descending continual sweeps of engine speed for governed or turbocharged engines.

(d) *Replicate tests.* You need not map an engine before every test, but you do need to remap the engine in any of the following situations:

(1) Good engineering judgment determines that an unreasonable amount of time has passed since the last map.

(2) The barometric pressure before the test begins has changed more than 25 mm Hg from the average barometric pressure observed during the map.

(3) The engine has undergone physical changes or recalibration that might affect its performance.

(e) *Power map.* Where applicable, generate a power map using the procedures this section specifies for torque maps. You may generate the power map directly or convert the torque map to a power map using engine speeds. The power map is also called a lug curve.

(f) *Cycles based only on torque/power at maximum test speed.* If the applicable test cycle for your engine does not require map information for engine speeds other than the maximum test speed, you may make the following simplifications:

(1) You need not perform the entire torque or power map, as long as you map the engines for speeds between 75 and 105 percent of the maximum test speed.

(2) You need not remap an engine according to paragraph (d) of this section. You need only verify the maximum torque or power at maximum test speed.

§ 1065.515 Test cycle generation.

(a) *Denormalizing test cycles.* The standard-setting parts establish the applicable test cycles consisting of second-by-second specifications for normalized torque and speed for transient cycles, or modal specifications for normalized torque and speed (or power and speed) for steady-state cycles. You must denormalize these values to get actual torque and speed for your engine.

(1) Torque is normalized to a maximum-torque value. Check the standard-setting part to see if it is normalized based on the maximum torque at the given speed or based on the maximum torque for all speeds. To denormalize the torque values in the cycle, use the engine's maximum-torque point or its torque map (§ 1065.510 describes how to generate the torque map).

(2) Power is normalized to a maximum-power value. Check the standard-setting part to see if it is normalized based on the maximum power at the given speed or based on the maximum power for all speeds. To denormalize the power values in the cycle, use the engine's maximum-power point or its power map (§ 1065.510 describes how to generate the power map).

(3) To denormalize speed, use the following equation:

$$\text{Actual engine speed} = (0.01) \times (\%\text{engine speed}) \times (\text{Maximum test speed—warm idle speed}) + \text{warm idle speed}$$

(4) Paragraph (d) of this section describes how to calculate maximum test speed.

(b) *Example of denormalizing a test points.* For an engine with maximum test speed of 3800 rpm and warm idle speed of 600 rpm, denormalize the following test point: percent engine speed = 43, percent torque = 82.

(1) *Calculate actual engine speed.* The following equation applies for this example:

$$\text{Actual engine speed} = (0.01) \times (43) \times (3800 - 600) + 600 = 1976 \text{ rpm.}$$

(2) *Determine actual torque.* Determine the maximum observed torque at 1976 rpm from the maximum torque curve. Then multiply this value (for example, 358 ft-lbs.) by 0.82. The resulting actual torque is 294 ft-lbs.

(c) *Cold-start enhancement devices.* If an engine has a properly operating automatic enhancement device for cold starts, let it override the zero-percent speed specified in the test cycles.

(d) *Maximum test speed.* For constant-speed engines, maximum test speed is the same as the engine's maximum operating speed in use. Maximum test speed for variable-speed engines occurs on the lug curve at the

point farthest from the origin on a plot of power vs. speed. To find this speed, follow three main steps:

(1) *Generate the lug curve.* Before testing an engine for emissions, generate data points for maximum measured brake power with varying engine speed (see § 1065.510). These data points form the lug curve.

(2) *Normalize the lug curve.* To normalize the lug curve, do three things:

(i) Identify the point (power and speed) on the lug curve where maximum power occurs.

(ii) Normalize the power values of the lug curve—divide them by the maximum power and multiply the resulting values by 100.

(iii) Normalize the engine speed values of the lug curve—divide them by the speed at which maximum power occurs and multiply the resulting values by 100.

(3) *Determine maximum test speed.* Calculate the maximum test speed from the following speed-factor analysis:

(i) For a given power-speed point, the speed factor is the normalized distance to the power-speed point from the zero-power, zero-speed point. Compute the speed factor's value:

$$\text{Speed factor} = \sqrt{(\text{power})^2 + (\text{speed})^2}$$

(ii) Determine the maximum value of speed factors for all the power-speed data points on the lug curve. Maximum test speed is the speed at which the speed factor's maximum value occurs. Note that this maximum test speed is the 100-percent speed point for normalized transient duty cycles.

(e) *Intermediate test speed.* Determine intermediate test speed with the following provisions:

(1) If peak torque speed is 60 to 75 percent of the maximum test speed, the intermediate speed point is at that same speed.

(2) If peak torque speed is less than 60 percent of the maximum test speed, the intermediate speed point is at 60 percent of maximum test speed.

(3) If peak torque speed is greater than 75 percent of the maximum test speed, the intermediate speed point is at 75 percent of maximum test speed.

§ 1065.520 Engine starting, restarting, and shutdown.

Unless the standard-setting part specifies otherwise, follow the steps in this section to start and shut down the test engine:

(a) *Engine starting.* Start the engine according to the manufacturer's recommended starting procedure in the owner's manual, using either a production starter motor or the dynamometer. Use the dynamometer to crank (or motor) the engine at the typical in-use cranking speed with a fully charged battery (nominal speed ±10 percent), accelerating the engine to cranking speed in the same time it would take with a starter motor (nominal ±0.5 seconds). Stop motoring by the dynamometer within one second of starting the engine. The cycle's free-idle period begins when you determine that the engine has started.

(1) If the engine does not start after 15 seconds of cranking, stop cranking and determine the reason it failed to start. While diagnosing the problem, turn off the device that measures gas flow (or revolution counter) on the constant-volume sampler (and all integrators when measuring emissions continuously). Also, turn off the constant-volume sampler or disconnect the exhaust tube from the tailpipe. If failure to start is an operational error, reschedule the engine for testing (this may require soaking the engine if the test requires a cold-start).

(2) If longer cranking times are necessary, you may use them instead of the 15-second limit, as long as the owner's manual and the service-repair manual describe the longer cranking times as normal.

(3) If an engine malfunction causes a failure to start, you may correct it in less than 30 minutes and continue the test. Reactivate the sampling system at the same time cranking begins. When the engine starts, begin the timing sequence. If an engine malfunction causes a failure to start, and you cannot restart the engine, the test is void.

(b) *Engine stalling.* Respond to engine stalling as follows:

(1) If the engine stalls during the warm-up period, the initial idle period of test, or the steady-state segment, you may restart the engine immediately using the appropriate starting procedure and continue the test.

(2) If the engine stalls at any other time, the test is void.

(c) *Engine shutdown.* Shut the engine down according to the manufacturer's specifications.

§ 1065.525 Engine dynamometer test run.

Take the following steps for each test:

(a) Prepare the engine, dynamometer, and sampling system. Change filters or other replaceable items and check for leaks as necessary.

(b) If you are using bag samples, connect evacuated sample-collection bags to the collection system for the dilute exhaust and dilution air sample.

(c) Attach the CVS to the engine's exhaust system any time before starting the CVS.

(d) Start the CVS (if not already started), the sample pumps, the engine cooling fans, and the data-collection system. Before the test begins, preheat the CVS's heat exchanger (if used) and the heated components of any continuous sampling systems to designated operating temperatures.

(e) Adjust the sample flow rates to the desired levels and set to zero the devices in the CVS that measure gas flow. The venturi design fixes the sample flow rate in a CFV–CVS.

(f) Start the engine if engine starting is not part of the test cycle, as specified in the standard-setting part.

(g) Run the test cycle specified in the standard-setting part and collect the test data.

(h) As soon as practical after the test cycle is complete, analyze the bag samples.

§ 1065.530 Test cycle validation criteria.

(a) *Steady-state emission testing.* Make sure your engine's speeds and loads stay within ±2 percent of the set point during the sampling period.

(b) *Transient emission testing performed by EPA.* Emission tests must meet the specifications of this paragraph (b). Otherwise, they do not comply with the test cycle requirements of the standard-setting part, unless we determine the cause of the failure to meet these specifications is related to the engine rather than the test equipment.

(1) *Shifting feedback signals.* The time lag between the feedback and reference-cycle values may bias results. To reduce this effect, you may advance or delay the entire sequence of engine-speed and torque-feedback signals with respect to the reference sequence for speed and torque. If you shift the feedback signals, you must shift speed and torque the same amount in the same direction.

(2) *Calculating brake kilowatt-hour emissions.* Calculate brake kilowatt-hour emissions for each pair of feedback values recorded for engine speed and torque. Also calculate the reference brake kilowatt-hour for each pair of reference values for engine speed and torque. Calculate to five significant figures.

(3) *Performing regression-line analysis.* Perform regression analysis to calculate validation statistics as follows:

(i) Perform linear regressions of feedback value on reference value for speed, torque, and brake power on 1 Hz data after the feedback shift has occurred (see paragraph (b)(1) of this section). Use the method of least squares, with the best-fit equation having the form:

$$y = mx + b$$

Where:

y = The feedback (actual) value of speed (rpm), torque (ft-lbs.), or brake power.

m = Slope of the regression line.

x = The reference value (speed, torque, or brake power).

b = The y-intercept of the regression line.

(ii) Calculate the standard error of estimate (SE) of y on x and the coefficient of determination (r^2) for each regression line.

(iii) For a valid test, make sure the feedback cycle's integrated brake kilowatt-hour is within 5 percent of the reference cycle's integrated brake kilowatt-hour. Also, ensure that the slope, intercept, standard error, and coefficient of determination meet the criteria in the following table (you may delete individual points from the regression analyses, consistent with good engineering judgment):

TABLE 1 OF § 1065.530.—STATISTICAL CRITERIA FOR VALIDATING TEST CYCLES

	Speed	Torque	Power
1. Slope of the regression line (m)	0.980 to 1.020	0.880 to 1.030	0.880 to 1.030.
2. Y intercept of the regression line (b).	$\lvert b \rvert \leq 40$ rpm	$\lvert b \rvert \leq 5.0$ percent of maximum torque from power map.	$\lvert b \rvert \leq 3.0$ percent of maximum torque from power map.
3. Standard error of the estimate of Y on X (SE).	100 rpm	15 percent of maximum torque from power map.	10 percent of maximum power from power map.
4. Coefficient of determination (r^2)	$r^2 \geq 0.970$	$r^2 \geq 0.900$	$r^2 \geq 0.900$.

(c) *Transient testing performed by manufacturers.* Emission tests that meet the specifications of paragraph (b) of this section satisfy the standard-setting part's requirements for test cycles. You may ask to use a dynamometer that cannot meet those specifications, consistent with good engineering practice. We will approve your request as long as using the alternate dynamometer does not affect your ability to show that you comply with all applicable emission standards.

Subpart G—Data Analysis and Calculations

§ 1065.601 Overview.

This subpart describes how to use the responses on the analyzers and other meters to calculate final gram per kilowatt-hour emission rates.

Note: Volume and density values used in these calculations are generally corrected to standard conditions of 20°C and 101.3 kPa.)

§ 1065.605 Required records.

Retain the following information for each test:

(a) Test number.

(b) System or device tested (brief description).

(c) Date and time of day for each part of the test schedule.

(d) Test results.

(e) Operator's name.

(f) Engine: ID number, manufacturer, model year, emission standards, engine family, basic engine description, fuel system, engine code, and idle speed, as applicable.

(g) Dynamometer: Dynamometer identification, records to verify compliance with the duty cycle requirements of the test.

(h) Gas analyzers: Analyzer bench identification, analyzer ranges, recordings of analyzer output during zero, span, and sample readings.

(i) Recorder charts: Test number, date, identification, operator's name, and identification of the measurements recorded.

(j) Test cell barometric pressure, ambient temperature, and humidity as required. (Some test systems may require continuous measurements; others may require a single measurement, or measurements before and after the test.)

(k) Temperatures: Records to verify compliance with the ambient temperature requirements throughout the test procedure.

(l) CFV–CVS: Total dilute exhaust volume (Vmix) for each phase of the exhaust test.

(m) PDP–CVS: Test measurements for calculating the total dilute exhaust volume (Vmix), and the Vmix for each phase of the exhaust test.

(n) The humidity of the dilution air.

Note: If you do not use conditioning columns, this measurement is not necessary. If you use conditioning columns and take the dilution air from the test cell, you may use the ambient humidity for this measurement.

§ 1065.610 Bag sample analysis.

(a) Zero the analyzers and obtain a stable zero reading. Recheck after tests.

(b) Introduce span gases and set instrument gains. To avoid errors, span and calibrate at the same flow rates used to analyze the test sample. Span gases should have concentrations equal to 75 to 100 percent of full scale. If gain has shifted significantly on the analyzers, check the calibrations. Show actual concentrations on the chart.

(c) Check zeroes; if necessary, repeat the procedure in paragraphs (a) and (b) of this section.

(d) Check flow rates and pressures.

(e) Measure HC, CO, CO_2, and NO_X concentrations of samples.

(f) Check zero and span points. If the difference is greater than 2 percent of full scale, repeat the procedure in paragraphs (a) through (e) of this section.

§ 1065.615 Bag sample calculations.

(a) Calculate the dilution factor. The dilution factor is the ratio of the total volume of the raw exhaust to the total volume of the diluted exhaust. It is calculated as 134,000 divided by the sum of the diluted ppmC concentrations of carbon-containing compounds in the exhaust, as follows:

$$DF = 134{,}000/(CO_{2sample}+THC_{sample}+CO_{sample}),$$

Where:

$CO_{2sample}$ and CO_{sample} are expressed as ppm, and THC_{sample} is expressed as ppmC.

(b) Calculate mass emission rates (g/test) for the transient segment using the general equation in paragraph (b)(1) of this section:

(1) The general equation is:

Emission rate = (total dilute exhaust flow volume)(ppm)(density factor)/10^6

$$M_x = (V_{mix})(C_i)(f_{di})/10^6$$

Where:

M_x = Mass emission rate in g/test segment.

V_{mix} = Total dilute exhaust flow volume flow in m^3 per test segment corrected to 20°C and 101.3 kPa.

C_i = The concentration of species i, in ppm or ppmC, corrected for background

contribution according to the equation in paragraph (b)(2) of this section.

f_{di} = The density factor for species i. The density factors are 576.8 g/m³ for THC, 1913 g/m³ for NO_X, and 1164 g/m³ for CO.

(2) The equation to calculate C_i is:

$C_i = C_{sample} - C_{background}\ [1 - (1/DF)]$

Where:

C_{sample} = Concentration of species i in the diluted exhaust sample, in ppm or ppmC.

$C_{background}$ = Concentration of species i in the dilution air background sample, in ppm or ppmC.

DF = Dilution factor, as calculated in paragraph (a) of this section.

(c) Calculate total brake work (kW–hr) done during the emissions sampling period of each segment or mode.

(d) Calculate emissions in g/kW–hr by dividing the mass emission rate (g/test segment) by the total brake work for the test segment.

(e) Apply deterioration factors or other adjustment factors to the brake-specific emission rate in paragraph (e) as specified in the standard-setting part.

Subpart H—Particulate Measurements [Reserved]

Subpart I—Testing With Oxygenated Fuels

§ 1065.801 Applicability.

(a) This subpart applies for testing with oxygenated fuels. Except where specified otherwise in the standard-setting part, compliance with this subpart is not required for fuels that contain less than 25 percent oxygenated compounds by volume. For example, you generally would not need to follow the requirements of this subpart for tests performed using a fuel that was 10 percent ethanol and 90 percent gasoline, but you would need to follow these requirements for tests performed using a fuel that was 85 percent ethanol and 15 percent gasoline.

(b) This subpart specifies sampling procedures and calculations that are different than those used for non-oxygenated fuels. The other test procedures of this part apply for testing with oxygenated fuels.

§ 1065.805 Sampling system.

(a) Use the sampling procedures specified in 40 CFR part 86 for methanol and formaldehyde to measure alcohols and aldehydes in the exhaust. This requires the following:

(1) Bubbling a sample of the exhaust through water to collect the alcohols.

(2) Passing a sample of the exhaust through cartridges impregnated with 2,4-dinitrophenylhydrazine to measure aldehydes.

(b) Use good engineering judgment to measure other oxygenated compounds in the exhaust.

§ 1065.810 Calculations.

(a) *THCE emissions.* (1) Calculate THCE emissions as the sum of the mass of the nonoxygenated hydrocarbons in the exhaust and the carbon-equivalent mass of each measured oxygenated species in the exhaust.

(2) Calculate carbon-equivalent mass of each measured oxygenated species from the following equation:

Carbon equivalent = 13.8756 × MOC/MWPC

Where:

MOC is the mass of the oxygenated compound in the exhaust, and MWPC is the molecular weight of compound per carbon atom of compound.

(b) *NMHCE emissions.* Calculate NMHCE emissions as either:

(1) The sum of the mass of the nonoxygenated nonmethane hydrocarbons in the exhaust and the carbon-equivalent mass of each measured oxygenated species in the exhaust.

(2) THCE minus the mass of methane in the exhaust.

(c) *Sample calculation.* (1) Assume the following emissions for a test: 40.00 grams of nonoxygenated hydrocarbons, 100.00 grams of ethanol, and 10.00 grams of acetaldehyde, and 1.00 gram of formaldehyde.

(2) The carbon-equivalent of the masses of oxygenated compounds are:

(i) 13.8756 × 100.00/(46.068/2) = 60.24 grams of ethanol.

(ii) 13.8756 × 10.00/(44.052/2) = 6.30 grams of acetaldehyde.

(iii) 13.8756 × 1.00/(30.026) = 0.46 grams of formaldehyde.

(3) THCE = 40.00 + 60.24 + 6.30 + 0.46 = 107.00 grams per test.

Subpart J—Field Testing

§ 1065.901 Applicability.

(a) The test procedures in this subpart measure brake-specific emissions from engines while they remain installed in vehicles or equipment in the field.

(b) These test procedures apply to your engines as specified in the standard-setting part. For example, part 1048 of this chapter specifies emission standard to be used for in-use tests conducted in accordance with the provisions of this part. Unless this subpart is specifically mentioned in the standard-setting part, compliance with the provisions of this subpart is not required.

§ 1065.905 General provisions.

(a) Unless the standard-setting part specifies deviations from the provisions of this subpart, testing conducted under this subpart must conform to all of the provisions of this subpart.

(b) Testing conducted under this subpart may include any normal in-use operation of the engine.

§ 1065.910 Measurement accuracy and precision.

(a) Measurement systems used for in-use testing must be accurate to within ±5 percent compared to engine dynamometer testing conducted according to the test procedures of this part that are applicable for your engine. These systems must also have a precision of ±5 percent or better. Determine accuracy and precision of an in-use system by simultaneously measuring emissions using the engine-dynamometer test procedures of this part and the in-use system. To have a statistically valid sample, measure emissions during at least 3 tests each for at least 3 different engines. You must conduct these verification tests using the test cycle specified in the standard-setting part, unless we approve a different test cycle.

(1) A system must meet the following conditions to be considered sufficiently accurate:

(i) The correlation coefficient (r) for a least-squares linear fit that includes the origin must be 0.95 or higher.

(ii) The average ratio (for all tests) of the emission rate from the in-use system divided by the emission rate from the dynamometer procedure must be 0.97 to 1.05.

(2) For a system to be considered sufficiently precise, the average coefficient of variance for all engines must be 5 percent or less for each pollutant.

Note: Increasing the length of the sampling period may be an effective way to improve precision.

(b) Measurement systems that conform to the provisions of §§ 1065.915 through 1065.950 are considered to be in compliance with the accuracy and precision requirements of paragraph (a) of this section.

§ 1065.915 Equipment specifications for SI engines.

This section describes equipment you may use to measure in-use emissions. You may use other equipment and measurement systems that conform to the requirements of §§ 1065.905 and 1065.910.

(a) The primary components of the in-use measurement system are a mass air flow sensor, a portable FID, a zirconia-

based NO_X sensor, a zirconia-based air/fuel ratio sensor, and a portable NDIR analyzer.

(1) The mass air flow sensor must meet the requirements of § 1065.930.

(2) The portable FID must meet the requirements of § 1065.935.

(3) The NO_X and air/fuel sensors must meet the requirements of § 1065.940

(4) The NDIR analyzer must meet the requirements of § 1065.945.

(b) You must measure the following parameters continuously at a rate of 3 Hz or higher and store the data electronically:

(1) THC, NO_X, CO concentrations.

(2) Mass air-fuel ratio.

(3) Intake air flow rate.

(4) Engine speed.

(5) Parameters used to calculate torque.

(c) You must minimize sample line length for any analyzers that require a physical sample be drawn from the exhaust to the analyzer (*i.e.*, THC and CO analyzers). You must draw these samples at a constant flow rate. In no case may you use any combination of sample line length and sample flow rate that would require more than 10 seconds for the analyzer to reach 90 percent of its final response after a step change to the input concentration at the opening of the sample probe. For residence time delays between 1 and 10 seconds, you must correct the measurements to be consistent with the data for engine speed, torque, and air intake. You may also correct other measurements with less than delays less than 1 second.

(d) You may insert the sample probes and sensors into the exhaust pipe, or mount them in an exhaust extension that is connected to the exhaust pipe with negligible leaking. Place the sample probes and sensors close enough to the center line of the exhaust pipe to minimize boundary layer effects from the wall.

§ 1065.920 Equipment setup and test run for SI engines.

This section describes how to set up the equipment specified in § 1065.915, and how to use it to measure in-use emissions from SI engines.

(a) Inspect the vehicle or equipment to determine whether it meets any applicable requirements of the standard-setting part. This may include requirements related to model year, accumulated hours of operation, fuel specifications, maintenance history, engine temperatures, etc.

(b) Perform calibrations as specified in this subpart. In the field, this generally will require only zeroing and spanning the instruments. However, each instrument must have been fully calibrated according to the instrument manufacturer's specifications. Nonlinear calibrations generated previously from the full calibration may be used after zeroing and spanning the instruments. Spanning can be performed using a single gas bottle, consistent with good engineering practice, and provided that stability of the span mixture has been demonstrated.

(c) Connect the data recorder (with any necessary signal interpreters or converters) to the engine's electronic control module.

(d) Disconnect the air intake system, as necessary, to attach the mass air flow sensor. Reconnect the system after attaching the mass air flow sensor.

(e) Attach the sample extension to the exhaust outlet.

(f) Turn on instruments and allow them to warm up as necessary.

(g) Begin sampling. You do not need to begin recording the data at this point.

(h) Begin operating the vehicle or equipment in a normal manner.

Note: We may require you to operate the vehicle or equipment in a specific manner.

(i) Begin recording engine speed, engine torque (or surrogate), intake air flow, emissions data (THC, NO_X, CO, air/fuel ratio), and time. This time marks the beginning of the sampling period.

(j) Continue recording data and operating the vehicle or equipment in a normal manner until the end of the sampling period. The length of the sampling period is based on good engineering practice, the precision requirements of § 1065.910, and applicable limits in the standard-setting part.

(k) You may measure background concentrations and correct measured emission values accordingly. However, if any background corrections are equivalent to 5 percent or more of the maximum emissions allowed by the applicable standard, the test shall be voided and repeated in an environment with lower background concentrations.

§ 1065.925 Calculations.

(a) [Reserved]

(b) Convert emission analyzer data to instantaneous concentrations in ppm (ppmC for the FID).

(c) Calculate instantaneous exhaust volumetric flow rates in standard m^3/hr (volume and density values used in these calculations are corrected to standard conditions of 20 °C and 101.3 kPa.). Calculate exhaust volumetric flow rate from the following equation:

Exhaust volumetric flow rate = (intake air mass flow rate)(1+mass fuel/air ratio)/(density of exhaust)

(1) If you do not know the instantaneous density of the exhaust, use the minimum density of the exhaust that occurs over the course of the test, corrected to standard conditions.

(2) For gasoline-fueled engines designed to be operated at stoichiometric fuel/air ratios, you may assume that the density of the exhaust is 1202 g/m^3 at standard conditions of 20 °C and 101.3 kPa.

(3) For LPG-fueled engines designed to be operated at stoichiometric fuel/air ratios, you may assume that the density of the exhaust is 1175 g/m^3 at standard conditions of 20 °C and 101.3 kPa.

(4) For CNG-fueled engines designed to be operated at stoichiometric fuel/air ratios, you may assume that the density of the exhaust is 1149 g/m^3 at standard conditions of 20 °C and 101.3 kPa.

(d) Calculate instantaneous emission rates (g/hr) using the following general equation:

Emission rate = (exhaust volumetric flow rate)(ppm)(density factor)/10^6

Where:

Density factors are 576.8 g/m^3 for THC, 1913 g/m^3 for NO_X, 1164 g/m^3 for CO.

(e) Integrate instantaneous emission rates for the entire specified sample period.

(f) Determine instantaneous brake torque and speed.

(g) Calculate instantaneous brake power.

(h) Integrate instantaneous brake power for the entire specified sample period.

(i) Divide the integrated emission rates by the integrated brake power. These are your final brake-specific emission rates.

§ 1065.930 Specifications for mass air flow sensors.

(a) Measure the intake air flow using the engine's mass air flow sensor. If the engine is not equipped with a mass air flow sensor, you need to install one.

(b) The sensor design must have an accuracy and precision of ±5 percent under steady-state laboratory conditions.

(c) The sensor must reach at least 90 percent of its final response within 0.3 seconds after any step change to the flow rate greater than or equal 80 percent of full scale.

(d) Calibrate the sensor according to good engineering practice. Verify for each engine before testing that the sensor accurately reads the idle intake air flow rate based on measured manifold temperature (T_M) and pressure P_M). Use the following equation:

Intake air flow = (displacement)(rpm)(volumetric efficiency)(P_M/101.3 kPa)(293.15 K/T_M)

§ 1065.935 Specifications for THC analyzers.

(a) Use a flame ionization detector (FID).

(b) The analyzer must have an accuracy and precision of ±2 percent of point or better under steady-state laboratory conditions.

(c) The analyzer must reach at least 90 percent of its final response within 1.0 second after any step change to the input concentration greater than or equal 80 percent of full scale.

(d) Zero and span the analyzer daily during testing. Calibrate it according to the analyzer manufacturer's specifications.

§ 1065.940 Specifications for NO_X and air/fuel sensors.

(a) Use stabilized zirconia-based sensors.

(b) The sensors must have an accuracy and precision of ±2 percent of point or better under steady-state laboratory conditions.

(c) The sensors must reach at least 90 percent of its final response within 1.0 second after any step change to the input concentration greater than or equal 80 percent of full scale.

(d) The sensors must be zeroed and spanned daily during testing, and must be calibrated according to the sensor manufacturer's specifications.

§ 1065.945 Specifications for CO analyzers.

(a) Use a non-dispersive infrared (NDIR) detector that is compensated for CO_2 and water interference.

(b) The analyzer must have an accuracy and precision of ±2 percent of point or better under steady-state laboratory conditions.

(c) The analyzer must reach at least 90 percent of its final response within 5.0 second after any step change to the input concentration greater than or equal 80 percent of full scale.

(d) The analyzer must be zeroed and spanned daily during testing, and must be calibrated according to the analyzer manufacturer's specifications.

§ 1065.950 Specifications for speed and torque measurement.

(a) Determine torque from a previously determined relationship of torque and engine speed, throttle position, and/or manifold absolute pressure. Torque estimates must be between 85 percent and 105 percent of the true value. You can demonstrate compliance with this accuracy requirement using steady-state laboratory data.

(b) Measure speed from the engine's electronic control module. Speed estimates must be within ±5 rpm of the true value.

Subpart K—Definitions and Other Reference Information

§ 1065.1001 Definitions.

The following definitions apply to this part. The definitions apply to all subparts unless we note otherwise. All undefined terms have the meaning the Act gives to them. The definitions follow:

Accuracy means the maximum difference between a measured or calculated value and the true value, where the true value is determined by NIST.

Act means the Clean Air Act, as amended, 42 U.S.C. 7401 *et seq.*

Adjustable parameter means any device, system, or element of design that someone can adjust (including those which are difficult to access) and that, if adjusted, may affect emissions or engine performance during emission testing or normal in-use operation.

Aftertreatment means relating to any system, component, or technology mounted downstream of the exhaust valve or exhaust port whose design function is to reduce exhaust emissions.

Auxiliary emission-control device means any element of design that senses temperature, engine speed, motive speed, transmission gear, atmospheric pressure, manifold pressure or vacuum, or any other parameter to activate, modulate, delay, or deactivate the operation of any part of the emission-control system. This also includes any other feature that causes in-use emissions to be higher than those measured under test conditions, except as we allow under this part.

Brake power has the meaning given in the standard-setting part. If it is not defined in the standard-setting part, brake power means the usable power output of the engine not including power required to operate fuel pumps, oil pumps, or coolant pumps.

Calibration means the set of specifications and tolerances specific to a particular design, version, or application of a component or assembly capable of functionally describing its operation over its working range.

Certification means obtaining a certificate of conformity for an engine family that complies with the emission standards and requirements in this part.

Compression-ignition means relating to a type of reciprocating, internal-combustion engine that is not a spark-ignition engine.

Constant-speed engine means an engine governed to operate only at its rated speed.

Designated Officer means the Manager, Engine Programs Group (6405–J), U.S. Environmental Protection Agency, 1200 Pennsylvania Ave., Washington, DC 20460.

Emission-control system means any device, system, or element of design that controls or reduces the regulated emissions from an engine.

Emission-data engine means an engine that is tested for certification.

Emission-related maintenance means maintenance that substantially affects emissions or is likely to substantially affect emissions deterioration.

Engine means an engine to which this part applies.

Engine-based means having emission standards related to measurements using an engine dynamometer, in units of grams of pollutant per kilowatt-hour.

Engine family means a group of engines with similar emission characteristics, as specified in the standard-setting part.

Equipment-based or vehicle-based means relating to programs that require that a piece of equipment of vehicle be certified, rather than only the engine.

Fuel system means all components involved in transporting, metering, and mixing the fuel from the fuel tank to the combustion chamber(s), including the fuel tank, fuel tank cap, fuel pump, fuel filters, fuel lines, carburetor or fuel-injection components, and all fuel-system vents.

Fuel type means a general category of fuels such as gasoline or LPG. There can be multiple grades within a single type of fuel, such as summer-grade gasoline and winter-grade gasoline.

Good engineering judgment has the meaning we give it in § 1068.5 of this chapter.

Identification number means a unique specification (for example, model number/serial number combination) that allows someone to distinguish a particular engine from other similar engines.

Idle speed means the lowest engine speed with zero load.

Note: Warm idle speed is the idle speed of a warmed-up engine.

Manufacturer has the meaning given in section 216(1) of the Act. In general, this term includes any person who manufactures an engine for sale in the United States or otherwise introduces a new engine into commerce in the United States. This includes importers that import engines for resale.

Maximum test torque means:

(1) For throttled engines, the torque output observed at wide-open throttle at a given speed.

(2) For non-throttled engines, the torque output observed with the maximum fueling rate possible at a given speed.

Nonmethane hydrocarbons means the sum of all hydrocarbon species measured by a FID except methane, expressed with an assumed mass 13.876 grams per mole of carbon atoms.

Nonroad means relating to nonroad engines.

Nonroad engine has the meaning given in § 89.2 of this chapter. In general this means all internal combustion engines except motor vehicle engines, stationary engines, or engines used solely for competition.

Oxides of nitrogen means compounds containing only nitrogen and oxygen. Oxides of nitrogen are expressed quantitatively as if the NO is in the form of NO_2 (assume a molecular weight for all oxides of nitrogen equivalent to that of NO_2). This correction is included in the equations specified for calculating NO_X emissions.

Oxygenated fuel means a fuel that is comprised of oxygen-containing compound, such as ethanol or methanol. Generally, testing engines that use oxygenated fuels requires the use of the sampling methods in subpart I of this part. However, you should read the standard-setting part and subpart I of this part to determine which sampling methods to use.

Precision means two times the coefficient of variance of multiple measurements, except where specified otherwise.

Revoking a certificate of conformity means discontinuing the certificate for an engine family. If we revoke a certificate, you must apply for a new certificate before continuing to introduce into commerce the affected engines. This does not apply to engines you no longer possess.

Scheduled maintenance means maintenance (*i.e.*, adjusting, repairing, removing, disassembling, cleaning, or replacing components or systems) that is periodically needed to keep a part from failing or malfunctioning. It also may mean actions you expect are necessary to correct an overt indication of failure or malfunction for which periodic maintenance is not appropriate.

Span means to adjust an instrument so that it gives a proper response to a calibration standard that represents between 75 and 100 percent of the maximum value in the instrument range (*e.g.* a span gas).

Spark-ignition means relating to a gasoline-fueled engine or other engines with a spark plug (or other sparking device) and with operating characteristics significantly similar to the theoretical Otto combustion cycle. Spark-ignition engines usually use a throttle to regulate intake air flow to control power during normal operation.

Standard-setting part means the part in the Code of Federal Regulations that defines emission standards for a particular engine (see § 1065.1(a)).

Stoichiometry means the proportion of a mixture of air and fuel such that the fuel is fully oxidized with no remaining oxygen. For example, stoichiometric combustion in gasoline engines typically occurs at an air-fuel mass ratio of about 14.7.

Suspending a certificate of conformity means temporarily discontinuing the certificate for an engine family. If we suspend a certificate, you may not sell engines from that engine family unless we reinstate the certificate or approve a new one.

Test engine means an engine in a test sample.

Test sample means the collection of engines selected from the population of an engine family for emission testing.

Total Hydrocarbon (THC) means the sum of all hydrocarbon species measured by an FID, expressed with an assumed mass 13.876 grams per mole of carbon atoms.

Total Hydrocarbon Equivalent means the sum of the carbon mass contributions of non-oxygenated hydrocarbons, alcohols and aldehydes, or other organic compounds that are measured separately as contained in a gas sample, expressed as petroleum-fueled engine hydrocarbons. The hydrogen-to-carbon ratio of the equivalent hydrocarbon is 1.85:1.

United States means the States, the District of Columbia, the Commonwealth of Puerto Rico, the Commonwealth of the Northern Mariana Islands, Guam, American Samoa, the U.S. Virgin Islands, and the Trust Territory of the Pacific Islands.

Wide-open throttle means maximum throttle opening for throttled engines. Unless this is specified at a given speed, it refers to maximum throttle opening at maximum speed. For electronically controlled or other engines with multiple possible fueling rates, wide-open throttle also means the maximum fueling rate at maximum throttle opening under test conditions.

Zero means to adjust an instrument so that it gives a proper response to a blank calibration standard (*e.g.* zero-grade air).

§ 1065.1005 Symbols, acronyms, and abbreviations.

The following symbols, acronyms, and abbreviations apply to this part:

° degrees.
″ inches.
ASTM American Society for Testing and Materials.
C Celsius.
cc cubic centimeters.
CFR Code of Federal Regulations.
CFV critical-flow venturi.
CI compression-ignition.
CLD chemiluminescent detector.
CO carbon monoxide.
CO_2 carbon dioxide.
CVS constant-volume sampler.
DF deterioration factor.
F Fahrenheit.
EFC electronic flow control.
EPA Environmental Protection Agency.
ft feet.
FID flame ionization detector.
g/kW-hr grams per kilowatt-hour.
g/liter grams per liter.
g/m^3 grams per cubic meter.
Hz hertz.
IBP initial boiling point.
ISO International Organization for Standardization.
kPa kilopascal.
lbs. pounds.
LPG liquefied petroleum gas.
m meters.
ml milliliters.
mm Hg millimeters of mercury.
NDIR nondispersive infrared.
NIST National Institute for Standards and Testing.
NMHC nonmethane hydrocarbons.
NMHCE nonmethane hydrocarbon equivalent.
NO nitric oxide.
NO_2 nitrogen dioxide.
NO_X oxides of nitrogen (NO and NO_2).
O_2 oxygen.
PDP positive-displacement pump.
ppm parts per million.
ppmC parts per million carbon.
RMS root-mean square.
rpm revolutions per minute.
sec seconds.
SI spark-ignition.
THC total hydrocarbon.
THCE total hydrocarbon equivalent.
U.S.C. United States Code.

§ 1065.1010 Reference materials.

We have incorporated by reference the documents listed in this section. The Director of the Federal Register approved the incorporation by reference as prescribed in 5 U.S.C. 552(a) and 1 CFR part 51. Anyone may inspect copies at the U.S. EPA, Air and Radiation Docket and Information Center, 1301 Constitution Ave., NW., Room B102, EPA West Building, Washington, DC 20460 or the Office of the Federal Register, 800 N. Capitol St., NW., 7th Floor, Suite 700, Washington, DC.

(a) *ASTM material.* Table 1 of § 1065.1010 lists material from the American Society for Testing and

Materials that we have incorporated by reference. The first column lists the number and name of the material. The second column lists the sections of this part where we reference it. Anyone may purchase copies of these materials from the American Society for Testing and Materials, 100 Barr Harbor Dr., West Conshohocken, PA 19428. Table 1 follows:

TABLE 1 OF § 1065.1010.—ASTM MATERIALS

Document number and name	Part 1065 reference
ASTM D 86–01, Standard Test Method for Distillation of Petroleum Products at Atmospheric Pressure	1065.210
ASTM D 323–99a, Standard Test Method for Vapor Pressure of Petroleum Products (Reid Method)	1065.210
ASTM D 1266–98, Standard Test Method for Sulfur in Petroleum Products (Lamp Method)	1065.210
ASTM D 1319–02, Standard Test Method for Hydrocarbon Types in Liquid Petroleum Products by Fluorescent Indicator Adsorption	1065.210
ASTM D 1267–02, Standard Test Method for Gage Vapor Pressure of Liquefied Petroleum (LP) Gases (LP-Gas Method)	1065.220
ASTM D 1837–02, Standard Test Method for Volatility of Liquefied Petroleum (LP) Gases	1065.220
ASTM D 1838–91 (Reapproved 2001), Standard Test Method for Copper Strip Corrosion by Liquefied Petroleum (LP) Gases	1065.220
ASTM D 1945–96 (Reapproved 2001), Standard Test Method for Analysis of Natural Gas by Gas Chromatography	1065.215
ASTM D 2158–02, Standard Test Method for Residues in Liquefied Petroleum (LP) Gases	1065.220
ASTM D 2163–91 (Reapproved 1996), Standard Test Method for Analysis of Liquefied Petroleum (LP) Gases and Propene Concentrates by Gas Chromatography	1065.220
ASTM D 2598–02, Standard Practice for Calculation of Certain Physical Properties of Liquefied Petroleum (LP) Gases from Compositional Analysis	1065.220
ASTM D 2713–91 (Reapproved 2001), Standard Test Method for Dryness of Propane (Valve Freeze Method)	1065.220
ASTM D 2784–98, Standard Test Method for Sulfur in Liquefied Petroleum Gases (Oxy-Hydrogen Burner or Lamp)	1065.220
ASTM D 3231–02, Standard Test Method for Phosphorus in Gasoline	1065.210
ASTM D 3237–97, Standard Test Method for Lead in Gasoline By Atomic Absorption Spectroscopy	1065.210

(b) *ISO material.* Table 2 of § 1065.1010 lists material from the International Organization for Standardization that we have incorporated by reference. The first column lists the number and name of the material. The second column lists the section of this part where we reference it. Anyone may purchase copies of these materials from the International Organization for Standardization, Case Postale 56, CH–1211 Geneva 20, Switzerland. Table 2 follows:

TABLE 2 OF § 1065.1010.—ISO MATERIALS

Document number and name	Part 1065 reference
ISO 8178–1, Reciprocating internal combustion engines—Exhaust emission measurement—Part 1: Test-bed measurement of gaseous and particulate exhaust emissions, 1996.	1065.130, 1065.135, 1065.140, 1065.155.

§ 1065.1015 Confidential information.

(a) Clearly show what you consider confidential by marking, circling, bracketing, stamping, or some other method. We will store your confidential information as described in 40 CFR part 2. Also, we will disclose it only as specified in 40 CFR part 2.

(b) If you send us a second copy without the confidential information, we will assume it contains nothing confidential whenever we need to release information from it.

(c) If you send us information without claiming it is confidential, we may make it available to the public without further notice to you, as described in § 2.204 of this chapter.

PART 1068—GENERAL COMPLIANCE PROVISIONS FOR NONROAD PROGRAMS

Subpart A—Applicability and Miscellaneous Provisions

Sec.

1068.1 Does this part apply to me?
1068.5 How must manufacturers apply good engineering judgment?
1068.10 How do I request EPA to keep my information confidential
1068.15 Who is authorized to represent the Agency?
1068.20 May EPA enter my facilities for inspections?
1068.25 What information must I give to EPA?
1068.30 What definitions apply to this part?
1068.35 What symbols, acronyms, and abbreviations does this part use?

Subpart B—Prohibited Actions and Related Requirements

1068.101 What general actions does this regulation prohibit?
1068.105 What other provisions apply to me specifically if I manufacture equipment needing certified engines?
1068.110 What other provisions apply to engines in service?
1068.115 When must manufacturers honor emission-related warranty claims?
1068.120 What requirements must I follow to rebuild engines?
1068.125 What happens if I violate the regulations?

Subpart C—Exemptions and Exclusions

1068.201 Does EPA exempt or exclude any engines from the prohibited acts?
1068.210 What are the provisions for exempting test engines?
1068.215 What are the provisions for exempting manufacturer-owned engines?
1068.220 What are the provisions for exempting display engines?
1068.225 What are the provisions for exempting engines for national security?
1068.230 What are the provisions for exempting engines for export?
1068.235 What are the provisions for exempting engines used solely for competition?
1068.240 What are the provisions for exempting new replacement engines?
1068.245 What temporary provisions address hardship due to unusual circumstances?
1068.250 What are the provisions for extending compliance deadlines for small-volume manufacturers under hardship?
1068.255 What are the provisions for exempting engines for hardship for equipment manufacturers and secondary engine manufacturers?

Subpart D—Imports

1068.301 Does this subpart apply to me?
1068.305 How do I get an exemption or exclusion for imported engines?
1068.310 What are the exclusions for imported engines?
1068.315 What are the permanent exemptions for imported engines?
1068.320 How must I label an imported engine with a permanent exemption?
1068.325 What are the temporary exemptions for imported engines?
1068.330 How do I import engines to modify for other applications?
1068.335 What are the penalties for violations?

Subpart E—Selective Enforcement Auditing

11068.401 What is a selective enforcement audit?
1068.405 What is in a test order?
1068.410 How must I select and prepare my engines?
1068.415 How do I test my engines?
1068.420 How do I know when my engine family fails an SEA?
1068.425 What happens if one of my production-line engines exceeds the emission standards?
1068.430 What happens if an engine family fails an SEA?
1068.435 May I sell engines from an engine family with a suspended certificate of conformity?
1068.440 How do I ask EPA to reinstate my suspended certificate?
1068.445 When may EPA revoke my certificate under this subpart and how may I sell these engines again?
1068.450 What records must I send to EPA?
1068.455 What records must I keep?
Appendix A to Subpart E of Part 1068-Plans for Selective Enforcement Auditing

Subpart F—Reporting Defects and Recalling Engines

1068.501 How do I report engine defects?
1068.505 How does the recall program work?
1068.510 How do I prepare and apply my remedial plan?
1068.515 How do I mark or label repaired engines?
1068.520 How do I notify affected owners?
1068.525 What records must I send to EPA?
1068.530 What records must I keep?
1068.535 How can I do a voluntary recall for emission-related problems?
1068.540 What terms do I need to know for this subpart?

Subpart G—Hearings

1068.601 What are the procedures for hearings?
Appendix I to Part 1068—Emission-Related Components
Appendix II to Part 1068—Emission-Related Parameters and Specifications

Authority: 42 U.S.C. 7401–7671(q).

Subpart A—Applicability and Miscellaneous Provisions

§ 1068.1 Does this part apply to me?

(a) The provisions of this part apply to everyone with respect to the following engines or to equipment using the following engines (including owners, operators, parts manufacturers, and persons performing maintenance):

(1) Large nonroad spark-ignition engines we regulate under 40 CFR part 1048.

(2) Recreational SI engines and vehicles that we regulate under 40 CFR part 1051 (such as snowmobiles and off-highway motorcycles).

(b) This part does not apply to any of the following engine or vehicle categories:

(1) Light-duty motor vehicles (see 40 CFR part 86).

(2) Heavy-duty motor vehicles and motor vehicle engines (see 40 CFR part 86).

(3) Aircraft engines (see 40 CFR part 87).

(4) Locomotive engines (see 40 CFR part 92).

(5) Land-based nonroad diesel engines (see 40 CFR part 89).

(6) Marine diesel engines (see 40 CFR parts 89 and 94)

(7) Marine outboard and personal watercraft engines (see 40 CFR part 91).

(8) Small nonroad spark-ignition engines (see 40 CFR part 90).

(c) For equipment subject to this part and regulated under equipment-based standards, interpret the term ''engine'' in this part to include equipment (see § 1068.30).

(d) Paragraph (a)(1) of this section identifies the parts of the CFR that define emission standards and other requirements for particular types of engines and vehicles. This part 1068 refers to each these other parts generically as the ''standard-setting part.'' For example, 40 CFR part 1051 is always the standard-setting part for snowmobiles. Follow the provisions of the standard-setting part if they are different than any of the provisions in this part.

§ 1068.5 How must manufacturers apply good engineering judgment?

(a) You must use good engineering judgment for decisions related to any requirements under this chapter. This includes your applications for certification, any testing you do to show that your production-line or in-use engines comply with requirements that apply to them, and how you select, categorize, determine, and apply these requirements.

(b) If we send you a written request, you must give us a written description of the engineering judgment in question. Respond within 15 working days of receiving our request unless we allow more time.

(c) We may reject your decision if it is not based on good engineering judgment or is otherwise inconsistent with the requirements that apply, based on the following provisions:

(1) We may suspend, revoke, or void a certificate of conformity if we determine you deliberately used incorrect information or overlooked important information, that you did not decide in good faith, or that your decision was not rational.

(2) If we believe a different decision would better reflect good engineering judgment, but none of the provisions of paragraph (c)(1) of this section apply, we will tell you of our concern (and its basis). You will have 30 days to respond to our concerns, or more time if we agree that you need it to generate more information. After considering your information, we will give you a final ruling. If we conclude that you did not use good engineering judgment, we may reject your decision and apply the new ruling to similar situations as soon as possible.

(d) We will tell you in writing of the conclusions we reach under paragraph

(c) of this section and explain our reasons for them.

(e) If you disagree with our conclusions, you may file a request for a hearing with the Designated Officer as described in subpart F of this part. In your request, specify your objections, include data or supporting analysis, and get your authorized representative's signature. If we agree that your request raises a substantial factual issue, we will hold the hearing according to subpart F of this part.

§ 1068.10 How do I request EPA to keep my information confidential

(a) Clearly identify any information you consider confidential by marking, circling, bracketing, stamping, or some other method. We will store your confidential information as described in 40 CFR part 2. Also, we will disclose it only as specified in 40 CFR part 2. This procedure applies equally to the Environmental Appeals Board.

(b) If you send us a second copy without the confidential information, we will assume it contains nothing confidential whenever we need to release information from it.

(c) If you send us information without claiming it is confidential, we may make it available to the public without further notice to you, as described in § 2.204 of this chapter.

§ 1068.15 Who is authorized to represent the Agency?

(a) The Administrator of the Environmental Protection Agency or any official to whom the Administrator has delegated specific authority may represent the Agency. For more information, ask for a copy of the relevant sections of the EPA Delegation Manual from the Designated Officer.

(b) The regulations in this part and in the standard-setting part have specific requirements describing how to get EPA approval before you take specific actions. These regulations also allow us to waive some specific requirements. For provisions or flexibilities that we address frequently, we may choose to provide detailed guidance in supplemental compliance instructions for manufacturers. Such instructions will generally state how they relate to the need for pre-approval. Unless we explicitly state so, you should not consider full compliance with the instructions to be equivalent to EPA approval.

§ 1068.20 May EPA enter my facilities for inspections?

(a) We may inspect your engines, testing, manufacturing processes, engine storage facilities (including port facilities for imported engines or other relevant facilities), or records, as authorized by the Act, to enforce the provisions of this chapter. Inspectors will have authorizing credentials and will limit inspections to reasonable times—usually, normal operating hours.

(b) If we come to inspect, we may or may not have a warrant or court order.

(1) If we do not have a warrant or court order, you may deny us entry.

(2) If we have a warrant or court order, you must allow us to enter the facility and carry out the activities it describes.

(c) We may seek a warrant or court order authorizing an inspection described in this section, whether or not we first tried to get your permission to inspect.

(d) We may select any facility to do any of the following:

(1) Inspect and monitor any aspect of engine manufacturing, assembly, storage, or other procedures, and any facilities where you do them.

(2) Inspect and monitor any aspect of engine test procedures or test-related activities, including test engine selection, preparation, service accumulation, emission duty cycles, and maintenance and verification of your test equipment's calibration.

(3) Inspect and copy records or documents related to assembling, storing, selecting, and testing an engine.

(4) Inspect and photograph any part or aspect of engines and components you use for assembly.

(e) You must give us reasonable help without charge during an inspection authorized by the Act. For example, you may need to help us arrange an inspection with the facility's managers, including clerical support, copying, and translation. You may also need to show us how the facility operates and answer other questions. If we ask in writing to see a particular employee at the inspection, you must ensure that he or she is present (legal counsel may accompany the employee).

(f) If you have facilities in other countries, we expect you to locate them in places where local law does not keep us from inspecting as described in this section. We will not try to inspect if we learn that local law prohibits it, but we may suspend your certificate if we are not allowed to inspect.

§ 1068.25 What information must I give to EPA?

If you are subject to the requirements of this part, we may require you to give us information to evaluate your compliance with any regulations that apply, as authorized by the Act. This includes the following things:

(a) You must provide the information we require in this chapter.

(b) You must establish and maintain records, perform tests, make reports and provide additional information that we may reasonably require under section 208 of the Act. This also applies to engines we exempt from emission standards.

§ 1068.30 What definitions apply to this part?

The following definitions apply to this part. The definitions apply to all subparts unless we note otherwise. All undefined terms have the meaning the Act gives to them. The definitions follow:

Act means the Clean Air Act, as amended, 42 U.S.C. 7401 *et seq.*

Aircraft means any vehicle capable of sustained air travel above treetop heights.

Certificate holder means a manufacturer (including importers) with a valid certificate of conformity for at least one engine family in a given calendar year.

Designated Officer means the Manager of the Engine Programs Group (6405–J), U.S. Environmental Protection Agency, 1200 Pennsylvania Ave., Washington, DC 20460.

Emission-related defect means a defect in design, materials or workmanship (in an emission control device or vehicle component or system) that affects an emission-related component, parameter, or specification that is identified in Appendix I or Appendix II of this part.

Engine means an engine to which this part applies. For equipment subject to this part and regulated under equipment-based standards, the term engine in this part shall be interpreted to include equipment.

Engine-based means having emission standards related to measurements using an engine dynamometer, in units of grams of pollutant per kilowatt-hour.

Engine manufacturer means the manufacturer that is subject to the certification requirements of the standard-setting part. For vehicles/equipment subject to this part and regulated under vehicle/equipment-based standards, the term engine manufacturer in this part includes vehicles/equipment manufacturers.

Equipment-based means having emission standards related to measurements from an engine installed in a vehicle using a chassis dynamometer, in units of grams of pollutant per kilometer.

Equipment manufacturer means any company producing a piece of equipment (such as a vehicle) for sale or use in the United States.

Manufacturer has the meaning given in section 216(1) of the Act. In general,

this term includes any person who manufactures an engine or vehicle for sale in the United States or otherwise introduces a new engine or vehicle into commerce in the United States. This includes importers that import new engines or new equipment into the United States for resale. It also includes secondary engine manufacturers.

New has the meaning we give it in the standard-setting part.

Nonroad engine means:

(1) Except as discussed in paragraph (2) of this definition, a nonroad engine is any internal combustion engine:

(i) In or on a piece of equipment that is self-propelled or serves a dual purpose by both propelling itself and performing another function (such as garden tractors, off-highway mobile cranes and bulldozers); or

(ii) In or on a piece of equipment that is intended to be propelled while performing its function (such as lawnmowers and string trimmers); or

(iii) That, by itself or in or on a piece of equipment, is portable or transportable, meaning designed to be and capable of being carried or moved from one location to another. Indicia of transportability include, but are not limited to, wheels, skids, carrying handles, dolly, trailer, or platform.

(2) An internal combustion engine is not a nonroad engine if:

(i) The engine is used to propel a motor vehicle or a vehicle used solely for competition, or is subject to standards promulgated under section 202 of the Act; or

(ii) The engine is regulated by a federal New Source Performance Standard promulgated under section 111 of the Act; or

(iii) The engine otherwise included in paragraph (1)(iii) of this definition remains or will remain at a location for more than 12 consecutive months or a shorter period of time for an engine located at a seasonal source. A location is any single site at a building, structure, facility, or installation. Any engine (or engines) that replaces an engine at a location and that is intended to perform the same or similar function as the engine replaced will be included in calculating the consecutive time period. An engine located at a seasonal source is an engine that remains at a seasonal source during the full annual operating period of the seasonal source. A seasonal source is a stationary source that remains in a single location on a permanent basis (*i.e.,* at least two years) and that operates at that single location approximately three months (or more) each year. This paragraph (2)(iii) does not apply to an engine after the engine is removed from the location.

Operating hours means:

(1) For engine storage areas or facilities, times during which people other than custodians and security personnel are at work near, and can access, a storage area or facility.

(2) For other areas or facilities, times during which an assembly line operates or any of the following activities occurs:

(i) Testing, maintenance, or service accumulation.

(ii) Production or compilation of records.

(iii) Certification testing.

(iv) Translation of designs from the test stage to the production stage.

(v) Engine manufacture or assembly.

Piece of equipment means any vehicle, vessel, locomotive, aircraft, or other type of equipment using engines to which this part applies.

Placed into service means used for its intended purpose.

Reasonable technical basis means information that would lead a person familiar with engine design and function to reasonably believe a conclusion, related to compliance with the requirements of this part. For example, it would be reasonable to believe that parts performing the same function as the original parts (and to the same degree) would control emissions to the same degree as the original parts.

Standard-setting part means the part in the Code of Federal Regulations that defines emission standards for a particular engine (see § 1068.1(a)). For example, the standard-setting part for non-recreational spark-ignition engines over 19 kW is part 1048 of this chapter.

Ultimate purchaser means the first person who in good faith buys a new engine for purposes other than resale.

United States means the States, the District of Columbia, the Commonwealth of Puerto Rico, the Commonwealth of the Northern Mariana Islands, Guam, American Samoa, the U.S. Virgin Islands, and the Trust Territory of the Pacific Islands.

We (us, our) means the Administrator of the Environmental Protection Agency and any authorized representatives.

§ 1068.35 What symbols, acronyms, and abbreviations does this part use?

The following symbols, acronyms, and abbreviations apply to this part:

$ U.S. dollars.
CFR Code of Federal Regulations.
EPA Environmental Protection Agency.
U.S. United States.
U.S.C. United States Code.

Subpart B—Prohibited Actions and Related Requirements

§ 1068.101 What general actions does this regulation prohibit?

This section specifies actions that are prohibited and the maximum civil penalties that we can assess for each violation. The maximum penalty values listed in paragraphs (a) and (b) of this section are shown for calendar year 2002. As described in paragraph (e) of this section, maximum penalty limits for later years are set forth in 40 CFR part 19.

(a) The following prohibitions and requirements apply to manufacturers of new engines and manufacturers of equipment containing these engines, except as described in subparts C and D of this part:

(1) You may not sell, offer for sale, or introduce or deliver into commerce in the United States or import into the United States any new engine or equipment after emission standards take effect for that engine or equipment, unless it has a valid certificate of conformity for its model year and the required label or tag. You also may not take any of the actions listed in the previous sentence with respect to any equipment containing an engine subject to this part's provisions, unless the engine has a valid certificate of conformity for its model year and the required engine label or tag. This requirement also covers new engines you produce to replace an older engine in a piece of equipment, unless the engine qualifies for the replacement-engine exemption in § 1068.240. We may assess a civil penalty up to $31,500 for each engine in violation.

(2) This chapter requires you to record certain types of information to show that you meet our standards. You must comply with these requirements to make and maintain required records (including those described in § 1068.501). You may not deny us access to or copying of your records if we have the authority to see or copy them. Also, you must give us the required reports or information without delay. Failure to comply with the requirements of this paragraph is prohibited. We may assess a civil penalty up to $31,500 for each day in violation.

(3) You may not keep us from entering your facility to test engines or inspect if we are authorized to do so. Also, you must perform the tests we require (or have the tests done for you). Failure to perform this testing is prohibited. We may assess a civil penalty up to $31,500 for each day in violation.

(b) The following prohibitions apply to everyone with respect to the engines to which this part applies:

(1) You may not remove or disable a device or element of design that may affect an engine's emission levels. This restriction applies before and after the engine is placed in service. Section 1068.120 describes how this applies to rebuilding engines. For a manufacturer or dealer, we may assess a civil penalty up to $31,500 for each engine in violation. For anyone else, we may assess a civil penalty up to $3,150 for each engine in violation. This does not apply in any of the following situations:

(i) You need to repair an engine and you restore it to proper functioning when the repair is complete.

(ii) You need to modify an engine to respond to a temporary emergency and you restore it to proper functioning as soon as possible.

(iii) You modify a new engine that another manufacturer has already certified to meet emission standards, intending to recertify it under your own engine family. In this case you must tell the original manufacturer not to include the modified engines in the original engine family.

(2) You may not knowingly manufacture, sell, offer to sell, or install, an engine part if one of its main effects is to bypass, impair, defeat, or disable the engine's control of emissions. We may assess a civil penalty up to $3,150 for each part in violation.

(3) For an engine that is excluded from any requirements of this chapter because it is a stationary engine, you may not move it or install it in any mobile equipment, except as allowed by the provisions of this chapter. You may not circumvent or attempt to circumvent the residence-time requirements of paragraph (2)(iii) of the nonroad engine definition in § 1068.30. We may assess a civil penalty up to $31,500 for each day in violation.

(4) For an uncertified engine or piece of equipment that is excluded or exempted from any requirements of this chapter because it is to be used solely for competition, you may not use it in a manner that is inconsistent with use solely for competition. We may assess a civil penalty up to $31,500 for each day in violation.

(5) You may not import an uncertified engine or piece of equipment if it is defined to be new in the standard-setting part, and it would have been subject to standards had it been built in the United States. We may assess a civil penalty up to $31,500 for each day in violation. Note the following:

(i) The definition of new is broad for imported engines; uncertified engines and equipment (including used engines and equipment) are generally considered to be new when imported.

(ii) Engines that were originally manufactured before applicable EPA standards were in effect are generally not subject to emission standards.

(c) Exemptions from these prohibitions are described in subparts C and D of this part.

(d) The standard-setting parts describe more requirements and prohibitions that apply to manufacturers (including importers) and others under this chapter.

(e) The maximum penalty values listed in paragraphs (a) and (b) of this section are shown for calendar year 2002. Maximum penalty limits for later years may be adjusted based on the Consumer Price Index. The specific regulatory provisions for changing the maximum penalties, published in 40 CFR part 19, reference the applicable U.S. Code citation on which the prohibited action is based. The following table is shown here for informational purposes:

TABLE 1 OF § 1068.101.—LEGAL CITATION FOR SPECIFIC PROHIBITIONS FOR DETERMINING MAXIMUM PENALTY AMOUNTS

Part 1068 regulatory citation of prohibited action	General description of prohibition	U.S. Code citation for Clean Air Act authority
§ 1068.101(a)(1)	Introduction into commerce of an uncertified product	42 U.S.C. 7522(a)(1)
§ 1068.101(a)(1)	Failure to provide information	42 U.S.C. 7522(a)(2)
§ 1068.101(a)(3)	Denying access to facilities	42 U.S.C. 7522(a)(2)
§ 1068.101(b)(1)	Tampering with emission controls by a manufacturer or dealer. Tampering with emission controls by someone other than a manufacturer or dealer.	42 U.S.C. 7522(a)(3)
§ 1068.101(b)(2)	Sale or use of a defeat device	42 U.S.C. 7522(a)(3)
§ 1068.101(b)(3)	Mobile use of a stationary engine	42 U.S.C. 7522(a)(1)
§ 1068.101(b)(4)	Noncompetitive use of an uncertified engine that is exempted for competition.	42 U.S.C. 7522(a)(1)
§ 1068.101(b)(5)	Importation of an uncertified product	42 U.S.C. 7522(a)(1)

§ 1068.105 What other provisions apply to me specifically if I manufacture equipment needing certified engines?

(a) *Transitioning to new standards.* You may use up your normal inventory of engines not certified to new emission standards if they were built before the date of the new standards. However, stockpiling these engines violates § 1068.101(a)(1).

(b) *Installing engines.* You must follow the engine manufacturer's emission-related installation instructions. For example, you may need to constrain where you place an exhaust aftertreatment device or integrate into your equipment models a device for sending visual or audible signals to the operator. Not meeting the manufacturer's emission-related installation instructions is a violation of § 1068.101(b)(1).

(c) *Attaching a duplicate label.* If you obscure the engine's label, you must do three things to avoid violating § 1068.101(a)(1):

(1) Permanently attach to your equipment a duplicate label. Secure it to a part needed for normal operation and not normally requiring replacement.

(2) Make sure your label is identical to the engine label. You may make the label yourself or get it from the engine manufacturer.

(3) Make sure an average person can easily read it.

(d) *Producing nonroad equipment certified to highway emission standards.* You may produce nonroad equipment from complete or incomplete motor vehicles with the motor vehicle engine if you meet three criteria:

(1) The engine or vehicle is certified to 40 CFR part 86.

(2) The engine is not adjusted outside the manufacturer's specifications.

(3) The engine or vehicle is not modified in any way that may affect its emission control. This applies to evaporative emission controls, but not refueling emission controls.

§ 1068.110 What other provisions apply to engines in service?

(a) *Aftermarket parts and service.* As the engine manufacturer, you may not require anyone to use your parts or service to maintain or repair an engine, unless we approve this in your application for certification. It is a violation of the Act for anyone to manufacture an engine or vehicle part if one of its main effects is to reduce the effectiveness of the emission controls. See § 1068.101(b)(2).

(b) *Certifying aftermarket parts.* As the manufacturer or rebuilder of an aftermarket engine part, you may—but are not required to—certify according to § 85.2114 of this chapter that using the part will not cause engines to fail to meet emission standards. Whether you certify or not, however, you must keep any information showing how your parts or service affect emissions.

(c) *Compliance with standards.* We may test engines or equipment to investigate compliance with emission standards. We may also require the manufacturer to do this testing.

(d) *Defeat devices.* We may test engines or equipment to investigate potential defeat devices. We may also require the manufacturer to do this testing. If we choose to investigate one of your designs, we may require you to show us that it does not have a defeat device. To do this, you may have to share with us information regarding test programs, engineering evaluations, design specifications, calibrations, on-board computer algorithms, and design strategies. It is a violation of the Act for anyone to make, install or use defeat devices. See § 1068.101(b)(2) and the standard-setting part.

(e) *Warranty and maintenance.* Owners may make warranty claims against the manufacturer for emission-related parts, as described in § 1068.115. This generally includes any emission-related engine parts that were not in common use before we have adopted emission standards. In general, we consider replacement or repair of any other components to be the owner's responsibility. The warranty period begins when the engine is first placed into service. See the standard-setting part for specific requirements. It is a violation of the Act for anyone to disable emission controls. See § 1068.101(b)(1) and the standard-setting part.

§ 1068.115 When must manufacturers honor emission-related warranty claims?

Section 207(a) of the Clean Air Act (42 U.S.C. 7541(a)) requires certifying manufacturers to warrant to purchasers that their engines are designed, built, and equipped to conform at the time of sale to the applicable regulations for their full useful life, including a warranty that the engines are free from defects in materials and workmanship that would cause an engine to fail to conform to the applicable regulations during the specified warranty period. This section codifies the warranty requirements of section 207(a) without intending to limit these requirements.

(a) As a certifying manufacturer, you may deny warranty claims for failures that have been caused by the owner's or operator's improper maintenance or use. For example, you would not need to honor warranty claims for failures that have been directly caused by the operator's abuse of an engine or the operator's use of the engine in a manner for which it was not designed, and are not attributable to you in any way.

(b) As a certifying manufacturer, you may not deny emission-related warranty claims based on any of the following:

(1) Maintenance or other service you or your authorized facilities performed.

(2) Engine repair work that an operator performed to correct an unsafe, emergency condition attributable to you, as long as the operator tries to restore the engine to its proper configuration as soon as possible.

(3) Any action or inaction by the operator unrelated to the warranty claim.

(4) Maintenance that was performed more frequently than you specify.

(5) Anything that is your fault or responsibility.

(6) The use of any fuel that is commonly available where the engine operates, unless your written maintenance instructions state that this fuel would harm the engine's emission control system and operators can readily find the proper fuel.

§ 1068.120 What requirements must I follow to rebuild engines?

(a) This section describes the steps to take when rebuilding engines to avoid violating the tampering prohibition in § 1068.101(b)(1). These requirements apply to anyone rebuilding an engine subject to this part, but the recordkeeping requirements in paragraphs (j) and (k) of this section apply only to businesses.

(b) The term ''rebuilding'' refers to a rebuild of an engine or engine system, including a major overhaul in which you replace the engine's pistons or power assemblies or make other changes that significantly increase the service life of the engine. It also includes replacing or rebuilding an engine's turbocharger or aftercooler or the engine's systems for fuel metering or electronic control so that it significantly increases the service life of the engine. For these provisions, rebuilding may or may not involve removing the engine from the equipment. Rebuilding does not normally include the following:

(1) Scheduled emission-related maintenance that the standard-setting part allows during the useful life period (such as replacing fuel injectors).

(2) Unscheduled maintenance that occurs commonly within the useful life period. For example, replacing a water pump is not rebuilding.

(c) For maintenance or service that is not rebuilding, you may not make changes that might increase emissions, but you do not need to keep any records.

(d) If you rebuild an engine or engine system, you must have a reasonable technical basis for knowing that the rebuilt engine has the same emissions performance as the engine in its certified configuration. Identify the model year of the resulting engine configuration. You have a reasonable basis if you meet two main conditions:

(1) Install parts—new, used, or rebuilt—so a person familiar with engine design and function would reasonably believe that the engine with those parts will control emissions to the same degree as with the original parts. For example, it would be reasonable to believe that parts performing the same function as the original parts (and to the same degree) would control emissions to the same degree as the original parts.

(2) Adjust parameters or change design elements only according to the original engine manufacturer's instructions. Or, if you differ from these instructions, you must have data or some other technical basis to show you should not expect in-use emissions to increase.

(e) If the rebuilt engine remains installed or is reinstalled in the same piece of equipment, you must rebuild it to the original configuration or another certified configuration of the same or later model year.

(f) If the rebuilt engine replaces another engine in a piece of equipment, you must rebuild it to a certified configuration that equals the emissions performance of the engine you are replacing.

(g) Do not erase or reset emission-related codes or signals from onboard monitoring systems without diagnosing and responding appropriately to any diagnostic codes. This requirement applies regardless of the manufacturer's reason for installing the monitoring system and regardless of its form or interface. Clear any codes from diagnostic systems when you return the rebuilt engine to service. Do not disable a diagnostic signal without addressing its cause.

(h) When you rebuild an engine, check, clean, adjust, repair, or replace all emission-related components (listed in Appendix I of this part) as needed according to the original manufacturer's recommended practice. In particular, replace oxygen sensors, replace the catalyst if there is evidence of malfunction, clean gaseous fuel system components, and replace fuel injectors (if applicable), unless you have a reasonable technical basis for believing they do not need replacement.

(i) If you are installing an engine that someone else has rebuilt, check all emission-related components listed in Appendix I of this part as needed according to the original manufacturer's recommended practice.

(j) Keep at least the following records:

(1) Identify the hours of operation (or mileage, as appropriate) at time of rebuild.

(2) Identify the work done on the engine or any emission-related control components, including a listing of parts and components you used.

(3) Describe any engine parameter adjustments.

(4) Identify any emission-related codes or signals you responded to and reset.

(k) You must show us or send us your records if we ask for them. Keep records for at least two years after rebuilding an engine. Keep them in any format that allows us to readily review them.

(1) You do not need to keep information that is not reasonably available through normal business practices. We do not expect you to have information that you cannot reasonably access.

(2) You do not need to keep records of what other companies do.

(3) You may keep records based on engine families rather than individual engines if that is the way you normally do business.

§ 1068.125 What happens if I violate the regulations?

(a) *Civil penalties and injunctions.* We may bring a civil action to assess and recover civil penalties and/or enjoin and restrain violations in the United States District Court for the district where you allegedly violated a requirement, or the district where you live or have your main place of business. Actions to assess civil penalties or restrain violations of § 1068.101 must be brought by and in the name of the United States. The selected court has jurisdiction to restrain violations and assess civil penalties.

(1) To determine the amount of a civil penalty and reach a just conclusion, the court considers these main factors:

(i) The seriousness of your violation.

(ii) How much you benefitted or saved because of the violation.

(iii) The size of your business.

(iv) Your history of compliance with Title II of the Act.

(v) What you did to remedy the violation.

(vi) How the penalty will affect your ability to continue in business.

(vii) Such other matters as justice may require.

(2) Subpoenas for witnesses who must attend a district court in any district may apply to any other district.

(b) *Administrative penalties.* Instead of bringing a civil action, we may assess administrative penalties if the total is less than $250,000 against you individually. This maximum penalty may be greater if the Administrator and the Attorney General jointly determine that is appropriate for administrative penalty assessment, or if the limit is adjusted under 40 CFR part 19. No court may review such a determination. Before we assess an administrative penalty, you may ask for a hearing (subject to 40 CFR part 22). The Administrator may compromise or remit, with or without conditions, any administrative penalty that may be imposed under this section.

(1) To determine the amount of an administrative penalty, we will consider the factors described in paragraph (a)(1) of this section.

(2) An administrative order we issue under this paragraph (b) becomes final 30 days after we issue it, unless you ask for judicial review by that time (see paragraph (c) of this section). You may ask for review by any of the district courts listed in paragraph (a) of this section. Send the Administrator a copy of the filing by certified mail.

(3) We will not pursue an administrative action for a violation if either of the following two conditions is true:

(i) We are separately prosecuting the violation under this part.

(ii) We have issued a final order for a violation, no longer subject to judicial review, for which you have already paid a penalty.

(c) *Judicial review.* If you ask a court to review a civil or administrative penalty, we will file in the appropriate court within 30 days of your request a certified copy or certified index of the record on which the court or the Administrator issued the order.

(1) The judge may set aside or remand any order issued under this section only if one of the following is true:

(i) Substantial evidence does not exist in the record, taken as a whole, to support finding a violation.

(ii) The Administrator's assessment of the penalty is an abuse of discretion.

(2) The judge may not add civil penalties unless our penalty is an abuse of discretion that favors you.

(d) *Effect of enforcement actions on other requirements.* Our pursuit of civil or administrative penalties does not affect or limit our authority to enforce any provisions of this chapter.

(e) *Penalties.* In any proceedings, the United States government may seek to collect civil penalties assessed under this section.

(1) Once a penalty assessment is final, if you do not pay it, the Administrator will ask the Attorney General to bring a civil action in an appropriate district court to recover the money. We may collect interest from the date of the final order or final judgment at rates established by the Internal Revenue Code of 1986 (26 U.S.C. 6621(a)(2)). In this action to collect overdue penalties, the court will not review the validity, amount, and appropriateness of the penalty. (2) In addition, if you do not pay the full amount of a penalty on time, you must then pay more to cover interest, enforcement expenses (including attorney's fees and costs for collection), and a quarterly nonpayment penalty for each quarter you do not pay. The nonpayment penalty is 10 percent of your total penalties plus any unpaid nonpayment penalties from previous quarters.

Subpart C—Exemptions and Exclusions

§ 1068.201 Does EPA exempt or exclude any engines from the prohibited acts?

We may exempt new engines from the prohibited acts in subpart B of this part under requirements described in this subpart. We may exempt an engine already placed in service in the United States from the prohibition in § 1068.101(b)(1) if the exemption for engines used solely for competition applies (see § 1068.235). In addition, see § 1068.1 and the standard-setting parts to determine if other engines are excluded from some or all of the regulations in this chapter.

(a) This subpart identifies which engines qualify for exemptions and what information we need. We may ask for more information.

(b) If you violate any of the terms, conditions, instructions, or requirements to qualify for an exemption, we may void the exemption.

(c) If you use an exemption under this subpart, we may require you to add a permanent label to your exempted engines. You may ask us to approve wording on the emission label different than we specify in this subpart if it is more appropriate for your engine.

(d) If you produce engines we exempt under this subpart, we may require you to make and keep records, perform tests, make reports and provide information as needed to reasonably evaluate the validity of the exemption.

(e) If you own or operate engines we exempt under this subpart, we may require you to provide information as needed to reasonably evaluate the validity of the exemption.

(f) Subpart D of this part describes how we apply these exemptions to engines you import (or intend to import).

(g) If you want to ask for an exemption or need more information, write to the Designated Officer.

(h) You may ask us to modify the administrative requirements for the exemptions described in this subpart. We may approve your request if we determine that such approval is consistent with the intent of this part. For example, waivable administrative requirements might include some reporting requirements, but would not include any eligibility requirements or use restrictions.

(i) If you want to take an action with respect to an exempted or excluded engine that is prohibited by the exemption or exclusion, such as selling it, you need to certify the engine. We will issue a certificate of conformity if you send us an application for certification showing that you meet all the applicable requirements from the standard-setting part. Also, in some cases, it may be sufficient to modify the engine as needed to make it identical to engines already covered by a certificate. Make sure these engines have emission control information labels that accurately describe their status.

§ 1068.210 What are the provisions for exempting test engines?

(a) We may exempt engines that are not exempted under other sections of this part that you will use for research, investigations, studies, demonstrations, or training.

(b) Anyone may ask for a testing exemption.

(c) If you are a certificate holder, you may request an exemption for engines you intend to include in test programs over a two-year period.

(1) In your request, tell us the maximum number of engines involved and describe how you will make sure exempted engines are used only for this testing.

(2) Give us the information described in paragraph (d) of this section if we ask for it.

(d) If you are not a certificate holder do all of the following:

(1) Show that the proposed test program has a valid purpose under paragraph (a) of this section.

(2) Show you need an exemption to achieve the purpose of the test program (time constraints may be a basis for needing an exemption, but the cost of certification alone is not).

(3) Estimate the duration of the proposed test program and the number of engines involved.

(4) Allow us to monitor the testing.

(5) Describe how you will ensure that you stay within this exemption's purposes. Address at least the following things:

(i) The technical nature of the test.

(ii) The test site.

(iii) The duration and accumulated engine operation associated with the test.

(iv) Ownership of the engines involved in the test.

(v) The intended final disposition of the engines.

(vi) How you will identify, record, and make available the engine identification numbers.

(vii) The means or procedure for recording test results.

(e) If we approve your request for a testing exemption, we will send you a letter or a memorandum for your signature describing the basis and scope of the exemption. The exemption does not take effect until we receive the signed letter or memorandum from you. It will also include any necessary terms and conditions, which normally require you to do the following:

(1) Stay within the scope of the exemption.

(2) Create and maintain adequate records that we may inspect.

(3) Add a permanent, legible label, written in block letters in English, to a readily visible part of each exempted engine. This label must include at least the following items:

(i) The label heading ''EMISSION CONTROL INFORMATION''.

(ii) Your corporate name and trademark.

(iii) Engine displacement, engine family identification (as applicable), and model year of the engine; or whom to contact for further information.

(iv) The statement ''THIS ENGINE IS EXEMPT UNDER 40 CFR 1068.210 FROM EMISSION STANDARDS AND RELATED REQUIREMENTS.''.

(4) Tell us when the test program is finished.

(5) Tell us the final disposition of the engines.

(6) Send us a written confirmation that you meet the terms and conditions of this exemption.

§ 1068.215 What are the provisions for exempting manufacturer-owned engines?

(a) You are eligible for the exemption for manufacturer-owned engines only if you are a certificate holder.

(b) An engine may be exempt without a request if it is a nonconforming engine under your ownership and control and you operate it to develop products, assess production methods, or promote your engines in the marketplace. You may not lease, sell, or use the engine to generate revenue, either by itself or in a piece of equipment.

(c) To use this exemption, you must do three things:

(1) Establish, maintain, and keep adequately organized and indexed information on each exempted engine, including the engine identification number, the use of the engine on exempt status, and the final disposition of any engine removed from exempt status.

(2) Let us access these records, as described in § 1068.20.

(3) Add a permanent, legible label, written in block letters in English, to a readily visible part of each exempted engine. This label must include at least the following items:

(i) The label heading ''EMISSION CONTROL INFORMATION''.

(ii) Your corporate name and trademark.

(iii) Engine displacement, engine family identification, and model year of

the engine or whom to contact for further information.

(iv) The statement ''THIS ENGINE IS EXEMPT UNDER 40 CFR 1068.215 FROM EMISSION STANDARDS AND RELATED REQUIREMENTS.''.

§ 1068.220 What are the provisions for exempting display engines?

(a) Anyone may request an exemption for display engines.

(b) A nonconforming display engine will be exempted if it is used only for displays in the interest of a business or the general public. This exemption does not apply to engines displayed for private use or any other purpose we determine is inappropriate for a display exemption.

(c) You may operate the exempted engine, but only if we approve specific operation that is part of the display.

(d) You may sell or lease the exempted engine only with our advance approval; you may not use it to generate revenue.

(e) To use this exemption, you must add a permanent, legible label, written in block letters in English, to a readily visible part of each exempted engine. This label must include at least the following items:

(1) The label heading ''EMISSION CONTROL INFORMATION''.

(2) Your corporate name and trademark.

(3) Engine displacement, engine family identification, and model year of the engine or whom to contact for further information.

(4) The statement ''THIS ENGINE IS EXEMPT UNDER 40 CFR 1068.220 FROM EMISSION STANDARDS AND RELATED REQUIREMENTS.''.

(f) We may set other conditions for approval of this exemption.

§ 1068.225 What are the provisions for exempting engines for national security?

(a) You are eligible for the exemption for national security only if you are a manufacturer.

(b) Your engine is exempt without a request if you produce it for a piece of equipment owned or used by an agency of the federal government responsible for national defense, where the equipment has armor, permanently attached weaponry, or other substantial features typical of military combat.

(c) You may request a national security exemption for engines not meeting the conditions of paragraph (b) of this section, as long as your request is endorsed by an agency of the federal government responsible for national defense. In your request, explain why you need the exemption.

§ 1068.230 What are the provisions for exempting engines for export?

(a) If you export a new engine to a country with emission standards identical to ours, we will not exempt it. These engines must comply with our certification requirements.

(b) If you export an engine to a country with different emission standards or no emission standards, it is exempt from the prohibited acts in this part without a request. If you produce an exempt engine for export and it is sold or offered for sale to someone in the United States (except for export), we will void the exemption.

(c) Label each exempted engine and shipping container with a label or tag showing the engine is not certified for sale or use in the United States. The label must include at least the statement ''THIS ENGINE IS SOLELY FOR EXPORT AND IS THEREFORE IS EXEMPT UNDER 40 CFR 1068.230 FROM U.S. EMISSION STANDARDS AND RELATED REQUIREMENTS.''.

§ 1068.235 What are the provisions for exempting engines used solely for competition?

(a) New engines you produce that are used solely for competition are generally excluded from emission standards. See the standard-setting parts for specific provisions where applicable.

(b) If you modify an engine after it has been placed into service in the United States so it will be used solely for competition, it is exempt without request. This exemption applies only to the prohibition in § 1068.101(b)(1) and is valid only as long as the engine is used solely for competition.

(c) If you modify an engine under this exemption, you must destroy the original emission label. If you sell or give one of these engines to someone else, you must tell the new owner in writing that it may be used only for competition.

§ 1068.240 What are the provisions for exempting new replacement engines?

(a) You are eligible for the exemption for new replacement engines only if you are a certificate holder.

(b) The prohibitions in § 1068.101(a)(1) do not apply to an engine if all the following conditions apply:

(1) You produce a new engine to replace an engine already placed in service in a piece of equipment.

(2) The engine being replaced was manufactured before the emission standards that would otherwise apply to the new engine took effect.

(3) No engine certified to current emission requirements is available with the appropriate physical or performance characteristics for the piece of equipment.

(4) You or your agent takes possession of the old engine.

(5) You make the replacement engine in a configuration identical in all material respects to the engine being replaced (or that of another certified engine of the same or later model year). This requirement applies only if the old engine was certified to emission standards less stringent than those in effect when you produce the replacement engine.

(c) If the old engine was not certified to any emission standards under this chapter, clearly label the replacement engine with the following language:

THIS ENGINE DOES NOT COMPLY WITH FEDERAL NONROAD OR HIGHWAY EMISSION REQUIREMENTS. SELLING OR INSTALLING THIS ENGINE FOR ANY PURPOSE OTHER THAN AS A REPLACEMENT ENGINE IN A VEHICLE OR PIECE OF EQUIPMENT BUILT BEFORE JANUARY 1, [Insert appropriate year reflecting when standards began to apply to engines of that size and type] IS A VIOLATION OF FEDERAL LAW SUBJECT TO CIVIL PENALTY.

(d) If the old engine was certified to emission standards less stringent than those in effect when you produce the replacement engine, clearly label the replacement engine with the following language:

THIS ENGINE DOES NOT COMPLY WITH CURRENT FEDERAL NONROAD OR HIGHWAY EMISSION REQUIREMENTS. SELLING OR INSTALLING THIS ENGINE FOR ANY PURPOSE OTHER THAN AS A REPLACEMENT ENGINE IN A VEHICLE OR PIECE OF EQUIPMENT BUILT BEFORE JANUARY 1, [Insert appropriate year reflecting when the earlier tier of emission standards began to apply to the old engine] IS A VIOLATION OF FEDERAL LAW SUBJECT TO CIVIL PENALTY.

§ 1068.245 What temporary provisions address hardship due to unusual circumstances?

(a) After considering the circumstances, we may permit you to introduce into commerce engines or equipment that do not comply with emission standards if all the following conditions apply:

(1) Unusual circumstances that are clearly outside your control and that could not have been avoided with reasonable discretion prevent you from meeting requirements from this chapter.

(2) You exercised prudent planning and were not able to avoid the violation; you have taken all reasonable steps to minimize the extent of the nonconformity.

(3) Not having the exemption will jeopardize the solvency of your company.

(4) No other allowances are available under the regulations in this chapter to avoid the impending violation.

(b) To apply for an exemption, you must send the Designated Officer a written request as soon as possible before you are in violation. In your request, show that you meet all the conditions and requirements in paragraph (a) of this section.

(c) Include in your request a plan showing how you will meet all the applicable requirements as quickly as possible.

(d) You must give us other relevant information if we ask for it.

(e) We may include reasonable additional conditions on an approval granted under this section, including provisions to recover or otherwise address the lost environmental benefit or paying fees to offset any economic gain resulting from the exemption. For example, in the case of multiple tiers of emission standards, we may require that you meet the less stringent standards.

(f) Add a permanent, legible label, written in block letters in English, to a readily visible part of each engine exempted under this section. This label must include at least the following items:

(1) The label heading ''EMISSION CONTROL INFORMATION''.

(2) Your corporate name and trademark.

(3) Engine displacement (in liters), rated power, and model year of the engine or whom to contact for further information.

(4) The statement ''THIS ENGINE IS EXEMPT UNDER 40 CFR 1068.245 FROM EMISSION STANDARDS AND RELATED REQUIREMENTS.''.

§ 1068.250 What are the provisions for extending compliance deadlines for small-volume manufacturers under hardship?

(a) After considering the circumstances, we may extend the compliance deadline for you to meet new or revised emission standards, as long as you meet all the conditions and requirements in this section.

(b) To be eligible for this exemption, you must qualify under the standard-setting part for special provisions for small businesses or small-volume manufacturers.

(c) To apply for an extension, you must send the Designated Officer a written request. In your request, show that all the following conditions and requirements apply:

(1) You have taken all possible business, technical, and economic steps to comply.

(i) In the case of importers of engines produced by other companies, show that you attempted to find a manufacturer capable of supplying complying products as soon as you became aware of the applicable requirements, but were unable to do so.

(ii) For all other manufacturers, show that the burden of compliance costs prevents you from meeting the requirements of this chapter.

(2) Not having the exemption will jeopardize the solvency of your company.

(3) No other allowances are available under the regulations in this chapter to avoid the impending violation.

(d) In describing the steps you have taken to comply under paragraph (c)(1) of this section, include at least the following information:

(1) Describe your business plan, showing the range of projects active or under consideration.

(2) Describe your current and projected financial standing, with and without the burden of complying fully with the applicable regulations in this chapter.

(3) Describe your efforts to raise capital to comply with regulations in this chapter (this may not apply for importers).

(4) Identify the engineering and technical steps you have taken or plan to take to comply with regulations in this chapter.

(5) Identify the level of compliance you can achieve. For example, you may be able to produce engines that meet a somewhat less stringent emission standard than the regulations in this chapter require.

(e) Include in your request a plan showing how you will meet all the applicable requirements as quickly as possible.

(f) You must give us other relevant information if we ask for it.

(g) An authorized representative of your company must sign the request and include the statement: ''All the information in this request is true and accurate, to the best of my knowledge.''.

(h) Send your request for this extension at least nine months before the relevant deadline. If different deadlines apply to companies that are not small-volume manufacturers, do not send your request before the regulations in question apply to the other manufacturers. Otherwise, do not send your request more than three years before the relevant deadline.

(i) We may include reasonable requirements on an approval granted under this section, including provisions to recover or otherwise address the lost environmental benefit. For example, we may require that you meet a less stringent emission standard or buy and use available emission credits.

(j) We will approve extensions of up to one year. We may review and revise an extension as reasonable under the circumstances.

(k) Add a permanent, legible label, written in block letters in English, to a readily visible part of each engine exempted under this section. This label must include at least the following items:

(1) The label heading ''EMISSION CONTROL INFORMATION''.

(2) Your corporate name and trademark.

(3) Engine displacement (in liters), rated power, and model year of the engine or whom to contact for further information.

(4) The statement ''THIS ENGINE IS EXEMPT UNDER 40 CFR 1068.250 FROM EMISSION STANDARDS AND RELATED REQUIREMENTS.''.

§ 1068.255 What are the provisions for exempting engines for hardship for equipment manufacturers and secondary engine manufacturers?

This section describes how, in unusual circumstances, we may exempt certain engines to prevent a hardship to an equipment manufacturer or a secondary engine manufacturer. This section does not apply to products that are subject to vehicle-based emission standards.

(a) *Equipment exemption.* As an equipment manufacturer, you may ask for approval to produce exempted equipment for up to 12 months. We will generally limit this to the first year that new or revised emission standards apply. Send the Designated Officer a written request for an exemption before you are in violation. In your request, you must show you are not at fault for the impending violation and that you would face serious economic hardship if we do not grant the exemption. This exemption is not available under this paragraph (a) if you manufacture the engine you need for your own equipment or if complying engines are available from other engine manufacturers that could be used in your equipment, unless we allow it elsewhere in this chapter. We may impose other conditions, including provisions to recover the lost environmental benefit. In determining whether to grant the exemptions, we will consider all relevant factors, including the following:

(1) The number of engines to be exempted.

(2) The size of your company and your ability to endure the hardship.

(3) The amount of time you had to redesign your equipment to accommodate a complying engine.

(4) Whether there was any breach of contract by an engine supplier.

(5) The potential for market disruption.

(b) *Engine exemption.* As an engine manufacturer, you may produce nonconforming engines for the equipment we exempt in paragraph (a) of this section. You do not have to request this exemption for your engines, but you must have written assurance from equipment manufacturers that they need a certain number of exempted engines under this section. Add a permanent, legible label, written in block letters in English, to a readily visible part of each exempted engine. This label must include at least the following items:

(1) The label heading ''EMISSION CONTROL INFORMATION''.

(2) Your corporate name and trademark.

(3) Engine displacement (in liters), rated power, and model year of the engine or whom to contact for further information.

(4) The statement ''THIS ENGINE IS EXEMPT UNDER 40 CFR 1068.255 FROM EMISSION STANDARDS AND RELATED REQUIREMENTS.''.

(c) *Secondary engine manufacturers.* As a secondary engine manufacturer, you may ask for approval to produce exempted engines under this section for up to one year. We may require you to certify your engines to compliance levels above the emission standards that apply. For example, if you need an exemption from a second tier of standards, we may require you to meet the standards that applied to earlier model years.

(1) For the purpose of this section, a secondary engine manufacturer is a manufacturer that produces an engine by modifying an engine that is made by a different manufacturer for a different type of application. This includes, for example, automotive engines converted for use in industrial applications, or land-based engines converted for use in marine applications. This applies whether the secondary engine manufacturer is modifying a complete or partially complete engine and whether the engine was previously certified to emission standards or not. To be a secondary engine manufacturer, you must not be controlled by the manufacturer of the base engine (or by an entity that also controls the manufacturer of the base engine). In addition, equipment manufacturers that substantially modify engines become secondary engine manufacturers. For the purpose of this definition, ''substantially modify'' means changing an engine in a way that could change its emission characteristics.

(2) The provisions in paragraph (a) of this section that apply to equipment manufacturers requesting an exemption apply equally to you, except that you may manufacture the engines. Before we can approve the exemption under this section, you must commit to a plan to make up the lost environmental benefit.

(i) If you produce uncertified engines under this exemption, we will calculate the lost environmental benefit based on our best estimate of uncontrolled emission rates for your engines.

(ii) If you produce engines under this exemption that are certified to a compliance level less stringent than the emission standards that would otherwise apply, we will calculate the lost environmental benefit based on the compliance level you select for your engines.

(3) The labeling requirements in paragraph (b) of this section apply to your exempted engines; however, if you certify engines to specific compliance levels, state on the label the compliance levels that apply to each engine.

Subpart D—Imports

§ 1068.301 Does this subpart apply to me?

(a) This subpart applies to you if you import into the United States engines or equipment subject to our emission standards or equipment containing engines subject to our emission standards.

(b) In general, engines that you import must be covered by a certificate of conformity unless they were built before emission standards started to apply. This subpart describes the limited cases where we allow importation of exempt or excluded engines.

(c) The U.S. Customs Service may prevent you from importing an engine if you do not meet the requirements of this subpart. In addition, U.S. Customs Service regulations may contain other requirements for engines imported into the United States (see 19 CFR Chapter I).

§ 1068.305 How do I get an exemption or exclusion for imported engines?

(a) Complete the appropriate EPA declaration form before importing any nonconforming engine. These forms are available on the Internet at http://www.epa.gov/OMS/imports/ or by phone at 202–564–9660.

(b) If we ask for it, prepare a written request in which you do the following:

(1) Give your name, address, telephone number, and taxpayer identification number.

(2) Give the engine owner's name, address, telephone number, and taxpayer identification number.

(3) Identify the make, model, identification number, and original production year of each engine.

(4) Identify which exemption or exclusion in this subpart allows you to import a nonconforming engine and describe how your engine qualifies.

(5) Tell us where you will keep your engines if you might need to store them until we approve your request.

(6) Authorize us to inspect or test your engines as the Act allows.

(c) We may ask for more information.

(d) You may import the nonconforming engines you identify in your request if you get prior written approval from us. The U.S. Customs Service may require you to show them the approval letter. We may temporarily or permanently approve the exemptions or exclusions, as described in this subpart.

(e) Make sure the engine meets any labeling requirements that apply.

§ 1068.310 What are the exclusions for imported engines?

Emission standards do not apply to excluded engines that you import. If you show us that your engines qualify under one of the paragraphs of this section, we will approve your request to import excluded engines. You must have our approval to import an engine under paragraph (a) of this section. You may, but are not required to request our approval for the other exclusions in this section. The following engines are excluded:

(a) *Engines used solely for competition.* Engines you use solely for competition are excluded. The standard-setting part may set special provisions for the manufacture, sale, or import of engines used solely for competition. Section 1068.101(b)(4) prohibits using these excluded engines for other purposes.

(b) *Stationary engines.* This includes engines that will be used in a permanently fixed location and engines meeting the criteria for the exclusion in paragraph (2)(iii) of the nonroad engine definition in § 1068.30. Section 1068.101(b)(3) prohibits using these engines for other purposes.

(c) *Other engines.* The standard-setting parts may exclude engines used in certain applications. For example, engines used in aircraft, underground mining, and hobby vehicles are generally excluded.

§ 1068.315 What are the permanent exemptions for imported engines?

We may approve a permanent exemption for an imported engine under the following conditions:

(a) *National security exemption.* You may import engine under the national security exemption in § 1068.225.

(b) *Manufacturer-owned engine exemption.* You may import a manufacturer-owned engine, as described in § 1068.215.

(c) *Replacement engine exemption.* You may import a nonconforming replacement engine as described in § 1068.240. To use this exemption, you must be a certificate holder for an engine family we regulate under the same part as the replacement engine.

(d) *Extraordinary circumstances exemption.* You may import a nonconforming engine if we grant hardship relief as described in § 1068.245.

(e) *Hardship exemption.* You may import a nonconforming engine if we grant an exemption for the transition to new or revised emission standards, as described in § 1068.255.

(f) *Identical configuration exemption.* You may import a nonconforming engine if it is identical to certified engines produced by the same manufacturer, subject to the following provisions:

(1) You may import only the following engines under this exemption:

(i) Large nonroad spark-ignition engines (see part 1048 of this chapter).

(ii) Recreational nonroad spark-ignition engines and equipment (see part 1051 of this chapter).

(2) You must meet all the following criteria:

(i) You have owned the engine for at least one year.

(ii) You agree not to sell, lease, donate, trade, or otherwise transfer ownership of the engine for at least five years, or until the engine is eligible for the exemption in paragraph (g) of this section. During this period, the only acceptable way to dispose of the engine is to destroy or export it.

(iii) You use data or evidence sufficient to show that the engine is in a configuration that is the same as an engine the original manufacturer has certified to meet emission standards that apply at the time the manufacturer finished assembling or modifying the engine in question. If you modify the engine to make it identical, you must follow the original manufacturer's complete written instructions.

(3) We will tell you in writing if we find the information insufficient to show that the engine is eligible for this exemption. In this case, we will not consider your request further until you address our concerns.

(g) *Ancient engine exemption.* If you are not the original engine manufacturer, you may import a nonconforming engine that is subject to a standard-setting part and was first manufactured at least 21 years earlier, as long as it is still in its original configuration.

§ 1068.320 How must I label an imported engine with a permanent exemption?

(a) For engines imported under § 1068.315 (a), (b), (c), (d), or (e), you must place a permanent label or tag on each engine. If no specific label requirements from subpart C of this part apply, you must meet the following requirements:

(1) Attach the label or tag in one piece so no one can remove it without destroying or defacing it.

(2) Make sure it is durable and readable for the engine's entire life.

(3) Secure it to a part of the engine needed for normal operation and not normally requiring replacement.

(4) Write it in block letters in English.

(5) Make it readily visible to the average person after the engine is installed in the equipment.

(b) On the engine label or tag, do the following:

(1) Include the heading ''Emission Control Information.''

(2) Include your full corporate name and trademark.

(3) State the engine displacement (in liters) and rated power. If the engine's rated power is not established, state the approximate power rating accurately enough to allow a detemination of which stanadards would otherwise apply.

(4) State: ''THIS ENGINE IS EXEMPT FROM THE REQUIREMENTS OF [identify the part referenced in 40 CFR 1068.1(a) that would otherwise apply], AS PROVIDED IN [identify the paragraph authorizing the exemption (for example, ''40 CFR 1068.315(a)'')]. INSTALLING THIS ENGINE IN ANY DIFFERENT APPLICATION IS A VIOLATION OF FEDERAL LAW SUBJECT TO CIVIL PENALTY.''.

(c) Get us to approve alternate label language if it is more accurate for your engine.

§ 1068.325 What are the temporary exemptions for imported engines?

If we approve a temporary exemption for an engine, you may import it under the conditions in this section. We may ask the U.S. Customs Service to require a specific bond amount to make sure you comply with the requirements of this subpart. You may not sell or lease one of these engines while it is in the United States. You must eventually export the engine as we describe in this section unless you get a certificate of conformity for it or it qualifies for one of the permanent exemptions in § 1068.315. Section 1068.330 specifies an additional temporary exemption allowing you to import certain engines you intend to sell or lease.

(a) *Exemption for repairs or alterations.* You may temporarily import a nonconforming engine under bond solely to repair or alter it. You may operate the engine in the United States only to repair or alter it or to ship it to or from the service location. Export the engine directly after the engine servicing is complete.

(b) *Testing exemption.* You may temporarily import a nonconforming engine under bond for testing if you follow the requirements of § 1068.210. You may operate the engine in the United States only to allow testing. This exemption expires one year after you import the engine, unless we approve a one-time request for an extension of up to one more year. The engine must be exported before the exemption expires.

(c) *Display exemption.* You may temporarily import a nonconforming engine under bond for display, as described in § 1068.220. This exemption expires one year after you import the engine, unless we approve your request for an extension. We may approve an extension of up to one more year for each request, but no more than three years in total. The engine must be exported by the time the exemption expires or directly after the display concludes, whichever comes first.

(d) *Export exemption.* You may temporarily import a nonconforming engine to export it, as described in § 1068.230. You may operate the engine in the United States only as needed to prepare it for export. Label the engine as described in § 1068.230.

(e) *Diplomatic or military exemption.* You may temporarily import nonconforming engines without bond if you represent a foreign government in a diplomatic or military capacity. In your request to the Designated Officer (see § 1068.305), include either written confirmation from the U.S. State Department that you qualify for this exemption or a copy of your orders for military duty in the United States. We will rely on the State Department or your military orders to determine when your diplomatic or military status expires, at which time you must export your exempt engines.

§ 1068.330 How do I import engines to modify for other applications?

This section allows you to import engines in configurations different than their final configuration. This exemption is temporary, as described in paragraph (d) of this section.

(a) This section applies in the following cases:

(1) You import a partially complete engine with the intent to manufacture complete engines for which you have either a certificate of conformity or an exemption that allows you to sell completed engines.

(2) You import an uncertified complete engine with the intent to modify it for installation in an application different than its otherwise intended application (for example, you import a land-based engine to modify it for a marine application). In this case, to qualify for an exemption under this section, you need either a certificate of conformity or an exemption that allows you to sell completed engines.

(3) You import a complete or partially complete engine to modify for an application for which emission standards do not apply.

(b) You may request this exemption in an application for certification. Otherwise, send your request to the Designated Officer. Your request must include:

(1) The name of the supplier of the partially complete engine, or the original manufacturer of the complete engine.

(2) A description of the certificate or exemption that will apply to the engines in the final configuration, or an explanation why a certificate or exemption is not needed.

(3) A brief description of how and where final assembly will be completed.

(4) An unconditional statement that the engines will comply with all applicable regulations in their final configuration.

(c) If we approve a temporary exemption for an engine, you may import it under the conditions in this section. We may ask the U.S. Customs Service to require a specific bond amount to make sure you comply with the requirements of this subpart.

(d) These provisions are intended only to allow you to import engines in the specific circumstances identified in this section, so any exemption under this section expires when you complete the assembly of the engine in its final configuration. If the engine in its final configuration is subject to emission standards, then it must be covered by a certificate or a different exemption before you introduce it into commerce.

§ 1068.335 What are the penalties for violations?

(a) *All imported engines.* Unless you comply with the provisions of this subpart, importation of nonconforming engines is violation of sections 203 and 213(d) of the Act. You may then have to export the engines, or pay civil penalties, or both. The U.S. Customs Service may seize unlawfully imported engines.

(b) *Temporarily imported engines.* If you do not comply with the provisions of this subpart for a temporary exemption, you may forfeit the total amount of the bond in addition to the sanctions we identify in paragraph (a) of this section. We will consider an engine to be exported if it has been destroyed or delivered to the U.S. Customs Service for export or other disposition under applicable Customs laws and regulations. EPA or the U.S. Customs Service may offer you a grace period to allow you to export a temporarily exempted engine without penalty after the exemption expires.

Subpart E—Selective Enforcement Auditing

§ 1068.401 What is a selective enforcement audit?

(a) We may conduct or require you to conduct emission tests on your production engines in a selective enforcement audit. This requirement is independent of any requirement for you to routinely test production-line engines.

(b) If we send you a signed test order, you must follow its directions and the provisions of this subpart. We will tell you where to test the engines. This may be where you produce the engines or any other emission testing facility.

(c) If we select one or more of your engine families for a selective enforcement audit, we will send the test order to the person who signed the application for certification or we will deliver it in person.

(d) Within one working day of receiving the test order, notify the Designated Officer which test facility you have selected for emission testing.

(e) You must do everything we require in the audit without delay.

§ 1068.405 What is in a test order?

(a) In the test order, we will specify the following things:

(1) The engine family and configuration (if any) we have identified for testing.

(2) The engine assembly plant, storage facility, or (if you import the engines) port facility from which you must select engines.

(3) The procedure for selecting engines for testing, including a selection rate.

(4) The test procedures, duty cycles, and test points, as appropriate, for testing the engines to show that they meet emission standards.

(b) We may state that we will select the test engines.

(c) We may identify alternate engine families or configurations for testing in case we determine the intended engines are not available for testing or if you do not produce enough engines to meet the minimum rate for selecting test engines.

(d) We may include other directions or information in the test order.

(e) We may ask you to show us that you meet any additional requirements that apply to your engines (closed crankcases, for example).

(f) In anticipation of a potential audit, you may give us a list of your preferred engine families and the corresponding assembly plants, storage facilities, or (if you import the engines) port facilities from which we should select engines for testing. The information would apply only for a single model year, so it would be best to include this information in your application for certification. If you give us this list before we issue a test order, we will consider your recommendations, but we may select engines differently.

(g) If you also do routine production-line testing with the selected engine family in the same time period, the test order will tell you what changes you might need to make in your production-line testing schedule.

§ 1068.410 How must I select and prepare my engines?

(a) *Selecting engines.* Select engines as described in the test order. If you are unable to select test engines this way, you may ask us to approve an alternate plan, as long as you make the request before you start selecting engines.

(b) *Assembling engines.* Produce and assemble test engines using your normal production and assembly process for that engine family.

(1) Notify us directly if you make any change in your production, assembly, or quality control processes that might affect emissions between the time you receive the test order and the time you finish selecting test engines.

(2) If you do not fully assemble engines at the specified location, we will describe in the test order how to select components to finish assembling the engines. Assemble these components onto the test engines using your documented assembly and quality control procedures.

(c) *Modifying engines.* Once an engine is selected for testing, you may adjust,

repair, prepare, or modify it or check its emissions only if one of the following is true:

(1) You document the need for doing so in your procedures for assembling and inspecting all your production engines and make the action routine for all the engines in the engine family.

(2) This subpart otherwise allows your action.

(3) We approve your action in advance.

(d) *Engine malfunction.* If an engine malfunction prevents further emission testing, ask us to approve your decision to either repair the engine or delete it from the test sequence.

(e) *Setting adjustable parameters.* Before any test, we may adjust or require you to adjust any adjustable parameter to any setting within its physically adjustable range.

(1) We may adjust idle speed outside the physically adjustable range as needed until the engine has stabilized emission levels (see paragraph (e) of this section). We may ask you for information needed to establish an alternate minimum idle speed.

(2) We may make or specify adjustments within the physically adjustable range by considering their effect on emission levels, as well as how likely it is someone will make such an adjustment with in-use engines.

(f) *Stabilizing emission levels.* Before you test production-line engines, you may operate the engine to stabilize the emission levels. Using good engineering judgment, operate your engines in a way that represents the way production engines will be used. You may operate each engine for no more than the greater of two periods:

(1) 50 hours.

(2) The number of hours you operated your emission-data engine for certifying the engine family (see 40 CFR part 1065, subpart E).

(g) *Damage during shipment.* If shipping an engine to a remote facility for production-line testing makes necessary an adjustment or repair, you must wait until after the initial emission test to do this work. We may waive this requirement if the test would be impossible or unsafe, or if it would permanently damage the engine. Report to us, in your written report under § 1068.450, all adjustments or repairs you make on test engines before each test.

(h) *Shipping engines.* If you need to ship engines to another facility for testing, make sure the test engines arrive at the test facility within 24 hours after being selected. You may ask that we allow more time if you are unable to do this.

(i) *Retesting after invalid tests.* You may retest an engine if you determine an emission test is invalid. Explain in your written report reasons for invalidating any test and the emission results from all tests. If you retest an engine and, within ten days after testing, ask to substitute results of the new tests for the original ones, we will answer within ten days after we receive your information.

§ 1068.415 How do I test my engines?

(a) Use the test procedures specified in the standard-setting part for showing that your engines meet emission standards. The test order will give further testing instructions.

(b) If no test cells are available at a given facility, you may make alternate testing arrangements with our approval.

(c) Test at least two engines in each 24-hour period (including void tests). However, if your projected U.S. nonroad engine sales within the engine family are less than 7,500 for the year, you may test a minimum of one engine per 24-hour period. If you request and justify it, we may approve a lower testing rate.

(d) Accumulate service on test engines at a minimum rate of 6 hours per engine during each 24-hour period. The first 24-hour period for service accumulation begins when you finish preparing an engine for testing. The minimum service accumulation rate does not apply on weekends or holidays. You may ask us to approve a lower service accumulation rate. Plan your service accumulation to allow testing at the rate specified in § 1068.415. Select engine operation for accumulating operating hours on your test engines to represent normal in-use engine operation for the engine family.

(e) Test engines is the same order you select them.

§ 1068.420 How do I know when my engine family fails an SEA?

(a) A failed engine is one whose final deteriorated test results exceed an applicable emission standard for any regulated pollutant.

(b) Continue testing engines until you reach a pass decision for all pollutants or a fail decision for one pollutant.

(c) You reach a pass decision for the SEA requirements when the number of failed engines is less than or equal to the pass decision number in Appendix A to this subpart for the total number of engines tested. You reach a fail decision for the SEA requirements when the number of failed engines is greater than or equal to the fail decision number in Appendix A to this subpart for the total number of engines you test. An acceptable quality level of 40 percent is the basis for the pass or fail decision.

(d) Consider test results in the same order as the engine testing sequence.

(e) If you reach a pass decision for one pollutant, but need to continue testing for another pollutant, we will disregard these later test results for the pollutant with the pass decision.

(f) Appendix A to this subpart lists multiple sampling plans. Use the sampling plan for the projected sales volume you reported in your application for the audited engine family.

(g) We may choose to stop testing after any number of tests.

(h) If we test some of your engines in addition to your own testing, we may decide not to include your test results as official data for those engines if there is substantial disagreement between your testing and our testing. We will reinstate your data as valid if you show us that we made an error and your data are correct.

(i) If we rely on our test data instead of yours, we will notify you in writing of our decision and the reasons we believe your facility is not appropriate for doing the tests we require under this subpart. You may request in writing that we consider your test results from the same facility for future testing if you show us that you have made changes to resolve the problem.

§ 1068.425 What happens if one of my production-line engines exceeds the emission standards?

(a) If one of your production-line engines fails to meet one or more emission standards (see § 1068.420), the certificate of conformity is automatically suspended for that engine. You must take the following actions before your certificate of conformity can cover that engine:

(1) Correct the problem and retest the engine to show it complies with all emission standards.

(2) Include in your written report a description of the test results and the remedy for each engine (see § 1068.450).

(b) You may at any time ask for a hearing to determine whether the tests and sampling methods were proper (see subpart G of this part).

§ 1068.430 What happens if an engine family fails an SEA?

(a) We may suspend your certificate of conformity for an engine family if it fails the SEA under § 1068.420. The suspension may apply to all facilities producing engines from an engine family, even if you find noncompliant engines only at one facility.

(b) We will tell you in writing if we suspend your certificate in whole or in

part. We will not suspend a certificate until at least 15 days after the engine family fails the SEA. The suspension is effective when you receive our notice.

(c) Up to 15 days after we suspend the certificate for an engine family, you may ask for a hearing to determine whether the tests and sampling methods were proper (see subpart G of this part). If we agree before a hearing that we used erroneous information in deciding to suspend the certificate, we will reinstate the certificate.

§ 1068.435 May I sell engines from an engine family with a suspended certificate of conformity?

You may sell engines that you produce after we suspend the engine family's certificate of conformity only if one of the following occurs:

(a) You test each engine you produce and show it complies with emission standards that apply.

(b) We conditionally reinstate the certificate for the engine family. We may do so if you agree to recall all the affected engines and remedy any noncompliance at no expense to the owner if later testing shows that engines in the engine family still do not comply.

§ 1068.440 How do I ask EPA to reinstate my suspended certificate?

(a) Send us a written report asking us to reinstate your suspended certificate. In your report, identify the reason for the SEA failure, propose a remedy, and commit to a date for carrying it out. In your proposed remedy include any quality control measures you propose to keep the problem from happening again.

(b) Give us data from production-line testing showing that engines in the remedied engine family comply with all the emission standards that apply.

§ 1068.445 When may EPA revoke my certificate under this subpart and how may I sell these engines again?

(a) We may revoke your certificate for an engine family in the following cases:

(1) You do not meet the reporting requirements.

(2) Your engine family fails an SEA and your proposed remedy to address a suspended certificate is inadequate to solve the problem or requires you to change the engine's design or emission-control system.

(b) To sell engines from an engine family with a revoked certificate of conformity, you must modify the engine family and then show it complies with the applicable requirements.

(1) If we determine your proposed design change may not control emissions for the engine's full useful life, we will tell you within five working days after receiving your report. In this case we will decide whether production-line testing will be enough for us to evaluate the change or whether you need to do more testing.

(2) Unless we require more testing, you may show compliance by testing production-line engines as described in this subpart.

(3) We will issue a new or updated certificate of conformity when you have met these requirements.

§ 1068.450 What records must I send to EPA?

(a) Within 30 calendar days of the end of each audit, send us a report with the following information:

(1) Describe any facility used to test production-line engines and state its location.

(2) State the total U.S.-directed production volume and number of tests for each engine family.

(3) Describe your test engines, including the engine family's identification and the engine's model year, build date, model number, identification number, and number of hours of operation before testing for each test engine.

(4) Identify where you accumulated hours of operation on the engines and describe the procedure and schedule you used.

(5) Provide the test number; the date, time and duration of testing; test procedure; initial test results before and after rounding; final test results; and final deteriorated test results for all tests. Provide the emission figures for all measured pollutants. Include information for both valid and invalid tests and the reason for any invalidation.

(6) Describe completely and justify any nonroutine adjustment, modification, repair, preparation, maintenance, or test for the test engine if you did not report it separately under this subpart. Include the results of any emission measurements, regardless of the procedure or type of equipment.

(7) Report on each failed engine as described in § 1068.425. (b) We may ask you to add information to your written report, so we can determine whether your new engines conform with the requirements of this subpart.

(c) An authorized representative of your company must sign the following statement:

> We submit this report under Sections 208 and 213 of the Clean Air Act. Ourtesting conformed completely with the requirements of 40 CFR part 1068. We have not changed production processes or quality-control procedures for the engine family in a way that might affect the emission control from production engines. All the information in this report is true and accurate, to the best of my knowledge. I know of the penalties for violating the Clean Air Act and the regulations. (Authorized Company Representative)

(d) Send reports of your testing to the Designated Officer using an approved information format. If you want to use a different format, send us a written request with justification for a waiver.

(e) We will send copies of your reports to anyone from the public who asks for them. We will release information about your sales or production volumes, which is all we will consider confidential.

§ 1068.455 What records must I keep?

(a) We may review your records at any time, so it is important to keep required information readily available. Organize and maintain your records as described in this section.

(b) Keep paper records for testing under this subpart for one full year after you complete all the testing required for the selective enforcement audit. For additional storage, you may use any format or media.

(c) Keep a copy of the written reports described in § 1068.450.

(d) Keep the following additional records:

(1) The names of supervisors involved in each test.

(2) The name of anyone who authorizes adjusting, repairing, preparing, or modifying a test engine and the names of all supervisors who oversee this work.

(3) If you shipped the engine for testing, the date you shipped it, the associated storage or port facility, and the date the engine arrived at the testing facility.

(4) Any records related to your audit that are not in the written report.

(5) A brief description of any significant events during testing not otherwise described in the written report or in this section.

(e) If we ask, you must give us projected or actual production for an engine family. Include each assembly plant if you produce engines at more than one plant.

(f) We may ask you to keep or send other information necessary to implement this subpart.

Appendix A to Subpart E of Part 1068—Plans for Selective Enforcement Auditing

The following tables describe sampling plans for selective enforcement audits, as described in § 1068.420:

TABLE A–1.—SAMPLING PLAN CODE LETTER

Projected engine family sales	Code letter [1]	Minimum number of tests		Maximum number of tests
		To pass	To fail	
20 – 50	AA	3	5	20
20 – 99	A	4	6	30
100 – 299	B	5	6	40
300 – 499	C	5	6	50
500 +	D	5	6	60

[1] A manufacturer may optionally use either the sampling plan for code letter ''AA'' or sampling plan for code letter ''A'' for Selective enforcement Audits of engine families with annual sales between 20 and 50 engines. Additionally, the manufacturer may switch between these plans during the audit.

TABLE A–2.—SAMPLING PLANS FOR DIFFERENT ENGINE FAMILY SALES VOLUMES

Stage [a]	AA		A		B		C		D	
	Pass #	Fail #	Pass #	Fail #	Pass #	Fail #	Pass #	Fail #	Pass #	Fail #
1.										
2.										
3	0									
4			0							
5	1	5	0		0		0		0	
6	1	6	1	6	1	6	0	6	0	6
7	2	6	1	7	1	7	1	7	1	7
8	2	7	2	7	2	7	2	7	2	8
9	3	7	2	8	2	8	2	8	2	8
10	3	8	3	8	3	8	3	9	3	9
11	4	8	3	8	3	9	3	9	3	9
12	4	9	4	9	4	9	4	10	4	10
13	5	9	5	10	4	10	4	10	4	10
14	5	10	5	10	5	10	5	11	5	11
15	6	10	6	11	5	11	5	11	5	11
16	6	10	6	11	6	12	6	12	6	12
17	7	10	7	12	6	12	6	12	6	12
18	8	10	7	12	7	13	7	13	7	13
19	8	10	8	13	8	13	7	13	7	13
20	9	10	8	13	8	14	8	14	8	14
21			9	14	9	14	8	14	8	14
22			10	14	9	15	9	15	9	15
23			10	15	10	15	10	15	9	15
24			11	15	10	16	10	16	10	16
25			11	16	11	16	11	16	11	16
26			12	16	11	17	11	17	11	17
27			12	17	12	17	12	17	12	17
28			13	17	12	18	12	18	12	18
29			14	17	13	18	13	18	13	19
30			16	17	13	19	13	19	13	19
31					14	19	14	19	14	20
32					14	20	14	20	14	20

TABLE A–2.—SAMPLING PLANS FOR DIFFERENT ENGINE FAMILY SALES VOLUMES—Continued

Stage [a]	AA		A		B		C		D	
	Pass #	Fail #	Pass #	Fail #	Pass #	Fail #	Pass #	Fail #	Pass #	Fail #
33					15	20	15	20	15	21
34					16	21	15	21	15	21
35					16	21	16	21	16	22
36					17	22	16	22	16	22
37					17	22	17	22	17	23
38					18	22	18	23	17	23
39					18	22	18	23	18	24
40					21	22	19	24	18	24
41							19	24	19	25
42							20	25	19	26
43							20	25	20	26
44							21	26	21	27
45							21	27	21	27
46							22	27	22	28
47							22	27	22	28
48							23	27	23	29
49							23	27	23	29
50							26	27	24	30
51									24	30
52									25	31
53									25	31
54									26	32
55									26	32
56									27	33
57									27	33
58									28	33
59									28	33
60									32	33

[a] Stage refers to the cumulative number of engines tested.

Subpart F—Reporting Defects and Recalling Engines

§ 1068.501 How do I report engine defects?

(a) *General provisions.* As an engine manufacturer, you must investigate in certain circumstances whether emission-related components are defective and send us reports as specified by this section.

(1) The term emission-related component includes those components listed in Appendix I of this part. For the purposes of this section, complete engines shall also be considered an emissions-related component. It also includes factory settings of emission-related parameters and specifications listed in Appendix II of this part.

(2) For the purposes of this section, defects do not include damage to emission-related components (or maladjustment of parameters) caused by owners improperly maintaining or abusing their engine.

(3) You must track the information specified in paragraph (b)(1) of this section. You are not required to collect additional information other than that specified in paragraph (b)(1) of this section before reaching the threshold for an investigation specified in paragraph (e) of this section.

(4) You may ask us to allow you to use alternate methods for tracking, investigating, reporting, and correcting emission-related defects. In your request, explain and demonstrate why you believe your alternate system will be at least as effective in tracking, identifying, investigating, evaluating, reporting, and correcting potential and actual emissions-related defects as the requirements in this section.

(5) If we determine that emission-related defects result in a substantial number of properly maintained and used engines not conforming to the regulations of this chapter during their

useful life, we may order you to conduct a recall of your engines (see § 1068.505).

(6) Send the defect reports and status reports required by this section to the Designated Officer.

(b) *Investigation of possible defects.* If the number of engines that possibly have a defect, as defined by paragraph (b)(1) of this section, exceed the thresholds specified in paragraph (e) of this section, you must conduct an investigation to determine if an emission-related component is actually defective.

(1) You must track warranty claims, parts shipments, and the other information specified in paragraph (b)(1)(iii) of this section. You must classify an engine as possibly having a defective component if any of the following is true:

(i) A warranty claim is submitted for the component, whether this is under your emission-related warranty or any other warranty.

(ii) You ship a replacement component other than for normally scheduled maintenance during the useful life of the engine.

(iii) You receive any other information indicating the component may be defective, such as information from dealers or hot line complaints.

(2) Your investigation must be prompt, thorough, consider all relevant information, follow scientific and engineering principles, and be designed to obtain all the information specified in paragraph (d) of this section.

(3) Your investigation only needs to consider defects that occur within the useful life period, or within five years after the end of the model year, whichever is longer.

(4) You must continue your investigation until you are able to obtain all the information specified for a defect report in paragraph (d) of this section. Send us an updated defect report anytime you have significant additional information.

(5) If a component believed to be defective is used in additional engine families or model years, you must investigate whether the component or part is defective when used in these additional engine families or model years, and include these results as part of your defect report.

(6) If your initial investigation concludes that the number of engines with a defect is fewer than the thresholds specified in paragraph (f) of this section, but other information becomes available that may show that the number of engines with a defect exceeds these thresholds, then you must resume your investigation. If you resume an investigation, you must include the information from the earlier investigation to determine whether to send a defect report.

(c) *Reporting defects.* You must send us a defect report in either of the following cases:

(1) Your investigation shows that the number of engines with a defect exceeds the thresholds specified in paragraph (f) of this section. Send the defect report within 15 days after the date you identify this number of defective engines.

(2) You know a defective emission-related component exists in a number of engines that exceeds the thresholds specified in paragraph (f) of this section, regardless of how you obtain this information. Send the defect report within 15 days after you learn that the number of defects exceeds one of these thresholds.

(d) *Contents of a defect report.* Include the following information in a defect report:

(1) Your corporate name and a person to contact regarding this defect.

(2) A description of the defect, including a summary of any engineering analyses and associated data, if available.

(3) A description of the engines that may have the defect, including engine families, models, and range of production dates. Note that you must address all model years for the engines, not just the model year for which you triggered the reporting requirement.

(4) An estimate of the number and percentage of each class or category of affected engines that have or may have the defect, and an explanation of how you determined this number.

(5) An estimate of the defect's impact on emissions, with an explanation of how you calculated this estimate and a summary of any emission data demonstrating the impact of the defect, if available.

(6) A description of your plan for addressing the defect or an explanation of your reasons for not believing the defects must be remedied.

(e) *Thresholds for conducting a defect investigation.* Unless the standard-setting part specifies otherwise, you must begin a defect investigation based on the following threshold values:

(1) For engine with rated power under 560 kW:

(i) When the component is a catalytic converter (or other aftertreatment device), if the number of engines in an engine family that may have the defect exceeds 2 percent of the total number of engines in the engine family or 2,000 engines, whichever is less.

(ii) When the emission-related component is anything but a catalytic converter (or other aftertreatment device), if the number of engines in an engine family that may have the defect exceeds 4 percent of the total number of engines in the engine family or 4,000 engines, whichever is less.

(2) For engine with rated power greater than or equal to 560 kW, if the number of engines in an engine family that may have the defect exceeds 1 percent of the total number of engines in the engine family or 5 engines, whichever is greater.

(f) *Thresholds for filing a defect report.* You must send a defect report based on the following threshold values:

(1) For engine with rated power under 560 kW:

(i) When the component is a catalytic converter (or other aftertreatment device), if the number of engines in an engine family that has the defect exceeds 0.125 percent of the total number of engines in the engine family or 125 engines, whichever is less.

(ii) When the emission-related component is anything but a catalytic converter (or other aftertreatment device), if the number of engines in an engine family that has the defect exceeds 0.250 percent of the total number of engines in the engine family or 250 engines, whichever is less.

(2) For engine with rated power greater than or equal to 560 kW, if the number of engines in an engine family that has the defect exceeds 0.5 percent of the total number of engines in the engine family or 2 engines, whichever is greater.

(g) *How to count defects.* In most cases, you may track defects separately for each model year and engine family. For families with annual U.S.-directed production volumes under 5,000 engines, you may apply the percentage thresholds in paragraphs (e) and (f) of this section on the basis of multiple model years, for engines using the same emission-related components. To determine whether you exceed the investigation threshold in paragraph (e) of this section, count defects that you correct before they reach the ultimate purchaser. Do not count these corrected defects to determine whether you exceed the reporting threshold in paragraph (f) of this section.

(h) *Status reports.* You must send us a mid-year or end-of-year status report if you concluded an investigation during the previous six months without filing a defect report or if you have an unresolved investigation at the end of the six-month period. Include the information specified in paragraph (c) of this section, or explain why the information is not relevant. Send these

status reports no later than June 30 and December 31 of each year.

(i) *Future production.* If you identify a design or manufacturing defect that prevents engines from meeting the requirements of this part, you must correct the defect as soon as possible for any future production for engines in every family affected by the defect. This applies without regard to whether you are required to conduct a defect investigation or submit a defect report under this section.

§ 1068.505 How does the recall program work?

(a) If we make a determination that a substantial number of properly maintained and used engines do not conform to the regulations of this chapter during their useful life, you must submit a plan to remedy the nonconformity of your engines. We will notify you of our determination in writing. Our notice will identify the class or category of engines affected and describe how we reached our conclusion. If this happens, you must meet the requirements and follow the instructions in this subpart. You must remedy at your expense noncompliant engines that have been properly maintained and used. You may not transfer this expense to a dealer or equipment manufacturer through a franchise or other agreement.

(b) You may ask for a hearing if you disagree with our determination (see subpart G of this part).

(c) Unless we withdraw the determination of noncompliance, you must respond to it by sending a remedial plan to the Designated Officer by the later of these two deadlines:

(1) Within 60 days after we notify you.

(2) Within 60 days after a hearing.

(d) Once you have sold an engine to the ultimate purchaser, we may inspect or test the engine only if he or she permits it, or if state or local inspection programs separately provide for it.

(e) You may ask us to allow you to conduct your recall differently than specified in this subpart, consistent with section 207(c) of the Act.

§ 1068.510 How do I prepare and apply my remedial plan?

(a) In your remedial plan, describe all of the following:

(1) The class or category of engines to be recalled, including the number of engines involved and the model year or other information needed to identify the engines.

(2) The modifications, alterations, repairs, corrections, adjustments, or other changes you will make to correct the affected engines.

(3) A brief description of the studies, tests, and data that support the effectiveness of the remedy you propose to use.

(4) The instructions you will send to those who will repair the engines under the remedial plan.

(5) How you will determine the owners' names and addresses.

(6) How you will notify owners; include copies of any notification letters.

(7) The proper maintenance or use you will specify, if any, as a condition to be eligible for repair under the remedial plan. Describe how owners should show they meet your conditions.

(8) The steps owners must take for you to do the repair. You may set a date or a range of dates, specify the amount of time you need, and designate certain facilities to do the repairs.

(9) Which company (or group) you will assign to do or manage the repairs.

(10) If your employees or authorized warranty agents will not be doing the work, state who will and say they can do it.

(11) How you will ensure an adequate and timely supply of parts.

(12) The effect of proposed changes on fuel consumption, driveability, and safety of the engines you will recall; include a brief summary of the information supporting these conclusions.

(13) How you intend to label the engines you repair and where you will place the label on the engine (see § 1068.515).

(b) We may require you to add information to your remedial plan.

(c) We may require you to test the proposed repair to show it will remedy the noncompliance.

(d) Use all reasonable means to locate owners. We may require you to use government or commercial registration lists to get owners' names and addresses, so your notice will be effective.

(e) The maintenance or use that you specify as a condition for eligibility under the remedial plan may include only things you can show would cause noncompliance. Do not require use of a component or service identified by brand, trade, or corporate name, unless we approved this approach with your original certificate of conformity. Also, do not place conditions on who maintained the engine.

(f) We may require you to adjust your repair plan if we determine owners would be without their engines or equipment for an unreasonably long time.

(g) We will tell you in writing within 15 days of receiving your remedial plan whether we have approved or disapproved it. We will explain our reasons for any disapproval.

(h) Begin notifying owners within 15 days after we approve your remedial plan. If we hold a hearing, but do not change our position about the noncompliance, you must begin notifying owners within 60 days after we complete the hearing, unless we specify otherwise.

§ 1068.515 How do I mark or label repaired engines?

(a) Attach a label to each engine you repair under the remedial plan. At your discretion, you may label or mark engines you inspect but do not repair.

(b) Make the label from a durable material suitable for its planned location. Make sure no one can remove the label without destroying or defacing it.

(c) On the label, designate the specific recall campaign and state where you repaired or inspected the engine.

(d) We may waive or modify the labeling requirements if we determine they are overly burdensome.

§ 1068.520 How do I notify affected owners?

(a) Notify owners by first class mail, unless we say otherwise. We may require you to use certified mail. Include the following in your notice:

(1) State: ''The U.S. Environmental Protection Agency has determined that your engine may be emitting pollutants in excess of the Federal emission standards, as defined in Title 40 of the Code of Federal Regulations. These emission standards were established to protect the public health or welfare from air pollution''.

(2) State that you (or someone you designate) will repair these engines at your expense.

(3) If we approved maintenance and use conditions in your remedial plan, state that you will make these repairs only if owners show their engines meet the conditions for proper maintenance and use. Describe these conditions and how owners should prove their engines are eligible for repair.

(4) Describe the components your repair will affect and say generally how you will repair the engines.

(5) State that the engine, if not repaired, may fail an emission inspection test if state or local law requires one.

(6) Describe any adverse effects on its performance or driveability that would be caused by not repairing the engine.

(7) Describe any adverse effects on the functions of other engine components that would be caused by not repairing the engine.

(8) Specify the date you will start the repairs, the amount of time you will need to do them, and where you will do them. Include any other information owners may need to know.

(9) Include a self-addressed card that owners can mail back if they have sold the engine (or equipment in which the engine is installed); include a space for owners to write the name and address of a buyer.

(10) State that owners should call you at a phone number you give to report any difficulty in obtaining repairs.

(11) State: ''To ensure your full protection under the emission warranty on your engine by federal law, and your right to participate in future recalls, we recommend you have your engine serviced as soon as possible. We may consider your not servicing it to be improper maintenance''.

(b) We may require you to add information to your notice or to send more notices.

(c) You may not in any communication with owners or dealers say or imply that your noncompliance does not exist or that it will not degrade air quality.

§ 1068.525 What records must I send to EPA?

(a) Send us a copy of all communications related to the remedial plan you sent to dealers and others doing the repairs. Mail or e-mail us the information at the same time you send it to others.

(b) From the time you begin to notify owners, send us a report within 25 days of the end of each calendar quarter. Send reports for six consecutive quarters or until all the engines are inspected, whichever comes first. In these reports, identify the following:

(1) The range of dates you needed to notify owners.

(2) The total number of notices sent.

(3) The number of engines you estimate fall under the remedial plan (explain how you determined this number).

(4) The cumulative number of engines you inspected under the remedial plan.

(5) The cumulative number of these engines you found needed the specified repair.

(6) The cumulative number of these engines you have repaired.

(7) The cumulative number of engines you determined to be unavailable due to exportation, theft, retirement, or other reasons (specify).

(8) The cumulative number of engines you disqualified for not being properly maintained or used.

(c) If your estimated number of engines falling under the remedial plan changes, change the estimate in your next report and add an explanation for the change.

(d) We may ask for more information.

(e) We may waive reporting requirements or adjust the reporting schedule.

(f) If anyone asks to see the information in your reports, we will follow the provisions of § 1068.10 for handling confidential information.

§ 1068.530 What records must I keep?

We may review your records at any time, so it is important that you keep required information readily available. Keep records associated with your recall campaign for three years after you complete your remedial plan. Organize and maintain your records as described in this section.

(a) Keep a paper copy of the written reports described in § 1068.525.

(b) Keep a record of the names and addresses of owners you notified. For each engine, state whether you did any of the following:

(1) Inspected the engine.

(2) Disqualified the engine for not being properly maintained or used.

(3) Completed the prescribed repairs.

(c) You may keep the records in paragraph (b) of this section in any form we can inspect, including computer databases.

§ 1068.535 How can I do a voluntary recall for emission-related problems?

If we have made a determination that a substantial number of properly maintained and used engines do not conform to the regulations of this chapter during their useful life, you may not use a voluntary recall or other alternate means to meet your obligation to remedy the noncompliance. Thus, this section only applies where you learn that your engine family does not meet the requirements of this chapter and we have not made such a determination.

(a) To do a voluntary recall under this section, first send the Designated Officer a plan, following the guidelines in § 1068.510. Within 15 days, we will send you our comments on your plan.

(b) Once we approve your plan, start notifying owners and carrying out the specified repairs.

(c) From the time you start the recall campaign, send us a report within 25 days of the end of each calendar quarter, following the guidelines in § 1068.525(b). Send reports for six consecutive quarters or until all the engines are inspected, whichever comes first.

(d) Keep your reports and the supporting information as described in § 1068.530.

§ 1068.540 What terms do I need to know for this subpart?

The following terms apply to this subpart:

Days means calendar days.

Owner means someone who owns an engine affected by a remedial plan or someone who owns a piece of equipment that has one of these engines.

Subpart G—Hearings

§ 1068.601 What are the procedures for hearings?

If we agree to hold a hearing related to our decision to order a recall under § 1068.505, we will hold the hearing according to the provisions of 40 CFR 85.1807. For any other issues, you may request an informal hearing, as described in 40 CFR 86.1853–01.

Appendix I to Part 1068—Emission-Related Components

This appendix specifies emission-related components that we refer to for describing such things as emission-related defects or requirements related to rebuilding engines.

I. Emission-related components include any engine parts related to the following systems:
1. Air-induction system.
2. Fuel system.
3. Ignition system.
4. Exhaust gas recirculation systems.

II. The following parts are also considered emission-related components:
1. Aftertreatment devices.
2. Crankcase ventilation valves.
3. Sensors.
4. Electronic control units.

III. Emission-related components also include any other part whose only purpose is to reduce emissions or whose failure will increase emissions without significantly degrading engine performance.

IV. We also consider the emission-control information label to be an emission-related component.

Appendix II to Part 1068—Emission-Related Parameters and Specifications

This appendix specifies emission-related parameters and specifications that we refer to for describing such things as emission-related defects or requirements related to rebuilding engines.

I. Basic Engine Parameters—Reciprocating Engines.
1. Compression ratio.
2. Type of air aspiration (natural, Roots-blown, supercharged, turbocharged).
3. Valves (intake and exhaust).
a. Head diameter dimension.
b. Valve lifter or actuator type and valve lash dimension.
4. Camshaft timing.
a. Valve opening—intake exhaust (degrees from top-dead center or bottom-dead center).
b. Valve closing—intake exhaust (degrees from top-dead center or bottom-dead center).

c. Valve overlap (degrees).
5. Ports—two stroke engines (intake and/or exhaust).
a. Flow area.
b. Opening timing (degrees from top-dead center or bottom-dead center).
c. Closing timing (degrees from top-dead center or bottom-dead center).
II. Intake Air System.
1. Roots blower/supercharger/turbocharger calibration.
2. Charge air cooling.
a. Type (air-to-air; air-to-liquid).
b. Type of liquid cooling (engine coolant, dedicated cooling system).
c. Performance.
3. Temperature control system calibration.
4. Maximum allowable inlet air restriction.
III. Fuel System.
1. General.
a. Engine idle speed.
b. Engine idle mixture.
2. Carburetion.
a. Air-fuel flow calibration.
b. Idle mixture.
c. Transient enrichment system calibration.
d. Starting enrichment system calibration.
e. Altitude compensation system calibration.
f. Hot idle compensation system calibration.
3. Fuel injection for spark-ignition engines.
a. Control parameters and calibrations.
b. Idle mixture.
c. Fuel shutoff system calibration.
d. Starting enrichment system calibration.
e. Transient enrichment system calibration.
f. Air-fuel flow calibration.
g. Altitude compensation system calibration.
h. Operating pressure(s).
i. Injector timing calibration.
4. Fuel injection for compression-ignition engines.
a. Control parameters and calibrations.
b. Transient enrichment system calibration.
c. Air-fuel flow calibration.
d. Altitude compensation system calibration.
e. Operating pressure(s).
f. Injector timing calibration.
IV. Ignition System for Spark-ignition Engines.
1. Control parameters and calibration.
2. Initial timing setting.
3. Dwell setting.
4. Altitude compensation system calibration.
5. Spark plug voltage.
V. Engine Cooling System—thermostat calibration.
VI. Exhaust System—maximum allowable back pressure.
VII. System for Controlling Exhaust Emissions.
1. Air injection system.
a. Control parameters and calibrations.
b. Pump flow rate.
2. EGR system.
a. Control parameters and calibrations.
b. EGR valve flow calibration.
3. Catalytic converter system.
a. Active surface area.
b. Volume of catalyst.
c. Conversion efficiency.
4. Backpressure.
VIII. System for Controlling Crankcase Emissions.
1. Control parameters and calibrations.
2. Valve calibrations.
IX. Auxiliary Emission Control Devices (AECD).
1. Control parameters and calibrations.
2. Component calibration(s).
X. System for Controlling Evaporative Emissions.
1. Control parameters and calibrations.
2. Fuel tank.
a. Volume.
b. Pressure and vacuum relief settings.
XI. Warning Systems Related to Emission Controls.
1. Control parameters and calibrations.
2. Component calibrations.

[FR Doc. 02–23801 Filed 11–7–02; 8:45 am]

BILLING CODE 6560–50–P